L44 150107 002

Tennessee Valley Authority, 1101 Market Street, Chattanooga, Tennessee 37402

CNL-14-219

January 7, 2015

10 CFR 50.4

U.S. Nuclear Regulatory Commission
ATTN: Document Control Desk
Washington, D.C. 20555-0001

Watts Bar Nuclear Plant, Unit 2
Construction Permit No. CPPR-92
NRC Docket No. 50-391

Subject: **Watts Bar Nuclear Plant (WBN) Unit 2 - Submittal of Pre-operational Test Instruction**

The following approved WBN Unit 2 Pre-op Test Instruction (PTI) is enclosed:

PTI NUMBER	Rev.	TITLE
2-PTI-999-02	0	Thermal Expansion

There are no new regulatory commitments associated with this submittal. If you have any questions, please contact Nick Welch at (423) 365-7820.

Respectfully,

J. W. Shea
Vice President, Nuclear Licensing

Enclosure
WBN Unit 2 Preoperational Test

cc: See Page 2

cc (Enclosure):

U. S. Nuclear Regulatory Commission
Region II
Marquis One Tower
245 Peachtree Center Ave., NE Suite 1200
Atlanta, Georgia 30303-1257

NRC Resident Inspector Unit 2
Watts Bar Nuclear Plant
1260 Nuclear Plant Road
Spring City, Tennessee 37381

Enclosure

Watts Bar Nuclear Plant

Unit 2 Preoperational Test

WATTS BAR NUCLEAR PLANT
UNIT 2 PREOPERATIONAL TEST

TITLE: THERMAL EXPANSION

Instruction No: 2-PTI-999-02
Revision No: 0000

PREPARED BY: JIMMY E. KIKER/ Jimmy E. Kiker DATE: 8-6-13
PRINT NAME / SIGNATURE

REVIEWED BY: CHARLES C. MASON/ DATE: 8/6/13
PRINT NAME / SIGNATURE

INSTRUCTION APPROVAL

JTG MEETING No: 2-14-041
JTG CHAIRMAN: Steven R Smith/ SR Smith DATE: 11-12-14
APPROVED BY : SR Smith DATE: 11-12-14
PREOPERATIONAL STARTUP MANAGER

TEST RESULTS APPROVAL

JTG MEETING No: _____
JTG CHAIRMAN: _____ DATE: _____
APPROVED BY : _____ DATE: _____
PREOPERATIONAL STARTUP MANAGER

Revision Log

Revision or Change Number	Effective Date	Affected Page Numbers	Description of Revision/Change
0	11/12/14	ALL	INITIAL ISSUE BASED ON PTI-999-02, REV 0 The Unit 1 PTI, all Change Notices, Revisions, TDNs, and Lessons Learned from the performance of that procedure have been reviewed and the applicable Change Notices, Revisions, TDNs, and Lessons Learned from the Unit 1 procedure have been incorporated into the Unit 2 PTI.

Table of Contents

1.0 INTRODUCTION 7
1.1 TEST OBJECTIVES 7
1.2 SCOPE 7
2.0 REFERENCES 9
2.1 Performance References 9
2.2 Developmental References 19
3.0 PRECAUTIONS AND LIMITATIONS 27
4.0 PREREQUISITE ACTIONS 28
4.1 Preliminary Actions 28
4.2 Special Tools, Measuring and Test Equipment (M&TE), Parts, and Supplies 38
4.3 Field Preparations 39
4.4 Approvals and Notifications 54
5.0 ACCEPTANCE CRITERIA 55
6.0 INSTRUCTIONS 56
6.1 Ambient Conditions of Reactor Coolant and Associated Systems 58
6.2 Heat up of the Reactor Coolant System Temperature to 250°F (245°F - 255°F) 67
6.3 Heat up of the Reactor Coolant System Temperature to 350°F (345°F - 355°F) 74
6.4 Heat up of the Reactor Coolant System Temperature to 450°F (445°F - 455°F) 83
6.5 Heat up of the Reactor Coolant System Temperature to 557°F (553°F - 560°F) 87
6.6 Operation of the Chemical & Volume Control System 92
6.7 Operation of the Reactor Coolant System Pressurizer Spray 97
6.8 Operation of the Turbine Driven Auxiliary Feedwater Pump (TDAFP) 99
6.9 Operation of the Feedwater System 102
6.10 Verification of Acceptance Criteria for Heat up 107

Table of Contents (continued)

6.11 Cool down of the Reactor Coolant System from 160°F to 140°F 108

6.12 Return of the Reactor Coolant System Temperature to Ambient Conditions of Less Than 105°F 110

7.0 POST PERFORMANCE ACTIVITIES 118

8.0 RECORDS 118

Appendix A: TEST PROCEDURES/INSTRUCTIONS REFERENCE REVIEW 119

Appendix B: TEMPORARY CONDITION LOG 121

Appendix C: MEASURING AND TEST EQUIPMENT LOG 122

Appendix D: GUIDELINES FOR VISUAL INSPECTION OF PIPING AND COMPONENTS DURING HOT FUNCTIONAL TESTING 214

Appendix E: PROBLEM REPORT AND PROBLEM REPORT SHEET INSTRUCTIONS 220

Attachment 1: LISTING OF DYNAMIC SNUBBERS, VARIABLE SPRING, CONSTANT SPRING SUPPORTS AND PROTECTIVE DEVICES WITHIN THE HEAT-UP BOUNDARY FOR HOT FUNCTIONAL TESTING 222

Attachment 2: INSTRUMENTED THERMAL MONITORING LOCATIONS AND ACCEPTANCE CRITERIA 264

Attachment 3: INSTRUMENTED THERMAL MONITORING POINTS AMBIENT TEMPERATURE (<105°F) DATA READINGS 284

Attachment 4: INSTRUMENTED THERMAL MONITORING POINTS 250° (245°-255°) TEMPERATURE DATA READINGS 302

Attachment 5: INSTRUMENTED THERMAL MONITORING POINTS 350° (345°-355°) TEMPERATURE DATA READINGS 320

Attachment 6: INSTRUMENTED THERMAL MONITORING POINTS 450° (445°-455°) TEMPERATURE DATA READINGS 338

Attachment 7: INSTRUMENTED THERMAL MONITORING POINTS 557° (553°-560°) TEMPERATURE DATA READINGS 356

Table of Contents (continued)

Attachment 8: INSTRUMENTED THERMAL MONITORING POINTS RETURN TO AMBIENT TEMPERATURE (<105°F) DATA READINGS 374

Attachment 9: DATA ACQUISITION SYSTEM COMPUTER DATA SHEET STORAGE 392

Attachment 10: PIPE RUPTURE PROTECTIVE DEVICES MAXIMUM PREDICTED THERMAL MOVEMENTS ACCEPTANCE CRITERIA AND DATA READINGS 393

Attachment 11: RCS COMPONENT SUPPORT HOT FUNCTIONAL TEST ACCEPTANCE CRITERIA 465

Attachment 12: REACTOR COOLANT SYSTEM COMPONENT SUPPORT PRE HOT FUNCTIONAL TEST AMBIENT TEMPERATURE <105°F DATA READINGS 475

Attachment 13: REACTOR COOLANT SYSTEM COMPONENT SUPPORT HOT FUNCTIONAL TEST 250° (245°-255°) TEMPERATURE DATA READINGS 510

Attachment 14: REACTOR COOLANT SYSTEM COMPONENT SUPPORT HOT FUNCTIONAL TEST 350° (345°-355°) TEMPERATURE DATA READINGS 545

Attachment 15: REACTOR COOLANT SYSTEM COMPONENT SUPPORT HOT FUNCTIONAL TEST 450° (445°-455°) TEMPERATURE DATA READINGS 580

Attachment 16: REACTOR COOLANT SYSTEM COMPONENT SUPPORT HOT FUNCTIONAL TEST 557° (553°-560°) TEMPERATURE DATA READINGS 615

Attachment 17: REACTOR COOLANT SYSTEM COMPONENT SUPPORT POST HOT FUNCTIONAL TEST AMBIENT TEMPERATURE <105°F DATA READINGS 650

Attachment 18: AMBIENT <105°F DATA FOR DYNAMIC SNUBBERS, VARIABLE SPRINGS AND CONSTANT SPRINGS 685

Attachment 19: DYNAMIC SNUBBERS, VARIABLE SPRINGS AND CONSTANT SPRINGS 250° (245°-255°) PLATEAU DATA 722

Table of Contents (continued)

Attachment 20: DYNAMIC SNUBBERS, VARIABLE SPRINGS AND CONSTANT SPRINGS 350° (345°-355°) PLATEAU DATA 759

Attachment 21: DYNAMIC SNUBBERS, VARIABLE SPRINGS AND CONSTANT SPRINGS 450° (445°-455°) PLATEAU DATA 796

Attachment 22: DYNAMIC SNUBBERS, VARIABLE SPRINGS AND CONSTANT SPRINGS 557° (553°-560°) PLATEAU DATA 833

Attachment 23: DYNAMIC SNUBBERS, VARIABLE SPRINGS AND CONSTANT SPRINGS CVCS DATA 870

Attachment 24: DYNAMIC SNUBBERS, VARIABLE SPRINGS AND CONSTANT SPRINGS REACTOR COOLANT SYSTEM PRZR SPRAY DATA 876

Attachment 25: DYNAMIC SNUBBERS, VARIABLE SPRINGS AND CONSTANT SPRINGS SGBD DATA 877

Attachment 26: DYNAMIC SNUBBERS, VARIABLE SPRINGS AND CONSTANT SPRINGS TDAFP STEAM PIPING DATA 883

Attachment 27: DYNAMIC SNUBBERS, VARIABLE SPRINGS AND CONSTANT SPRINGS RETURN TO AMBIENT <105°F DATA 886

Attachment 28: SIGNATURE LOG SHEET STORAGE 923

Attachment 29: CHRONOLOGICAL TEST LOG SHEET STORAGE 924

Attachment 30: PROBLEM REPORT LOG SHEET STORAGE 925

Attachment 31: PROBLEM REPORT SHEET STORAGE 926

Attachment 32: TEST DEFICIENCY NOTICE LOG SHEET STORAGE 927

Attachment 33: TEST DEFICIENCY NOTICE SHEET STORAGE 928

Attachment 34: REVIEW OF CHANNEL, DISPLACEMENT, AND TEMPERATURE INPUT TO THE DAS 929

1.0 INTRODUCTION

1.1 TEST OBJECTIVES

The objective of this test is to demonstrate the Reactor Coolant System (RCS) components and specified safety related systems designated as ASME Class 1, 2, and 3 and portions of the Main Steam System in the yard and Turbine Building, from the flued head in the North and South valve rooms to the main Turbine Stop Valves and to the Condenser via the Steam Dump Headers, with operating temperatures greater than 200°F, and which experience thermal expansion consistent with design. Additionally, to verify that specified system support components do not interfere with the pipe thermal growth.

1.2 SCOPE

A. The following are systems or portions of systems (001, 003, 015, 062, 063, 068 and 074) to be monitored for thermal growth:

1. Residual Heat Removal System (RHR), from the RCS to the RHR Heat Exchangers and from the RHR Heat Exchangers to valves 2-FCV-063-93 (RHR to Cold Leg 2 & 3 Injection Isolation), 2-FCV-063-94 (RHR to Cold Leg 1 & 4 Injection Isolation), and 2-FCV-063-172 (RHR to RCS HL 1 & 3 Flow Isol Vlv).

2. Main Steam System from the Steam Generators to the Turbine Stop and Control Valves and to the Condenser via the Steam Dump Headers.

3. Steam to the Turbine Driven Auxiliary Feedwater Pump.

4. Steam Generator Blowdown from the Steam Generators to the Steam Generator Blowdown Heat Exchangers.

5. Chemical Volume and Control System (CVCS).

   a. Normal Letdown from the RCS to the Letdown Heat Exchanger.

   b. Excess Letdown from the RCS to the Excess Letdown Heat Exchanger.

   c. Normal and Alternate Charging from the Regenerative Heat Exchanger to the RCS.

   d. Auxiliary Spray to the Pressurizer.

1.2 SCOPE (continued)

6. Safety Injection (SI).

   a. Accumulator Safety Injection from the Accumulator Outlet Isolation MOVs to the RCS.

   b. SI System from 2-FCV-063-93 (RHR to Cold Leg 2 & 3 Injection Isolation), 2-FCV-063-94 (RHR to Cold Leg 1 & 4 Injection Isolation), and 2-FCV-063-172 (RHR to RCS HL 1 & 3 Flow Isol Vlv) to the RCS.

   c. SI System from 2-FCV-063-156 (SI PUMP 2A-A Hot Leg 1 & 3 Injection), 2-FCV-063-157 (SI PUMP 2B-B Hot Leg 2 & 4 Injection), and 2-FCV-063-22 (SI Pumps to Cold Leg Injection) to the RCS.

   d. SI System from 2-FCV-063-25 (SIS Boron Inj Tank Shutoff Vlv) and 2-FCV-063-26 (SIS Boron Inj Tank Shutoff VLV) to the RCS.

7. Reactor Coolant System including Pressurizer Surge Line, Pressurizer Spray Lines, Pressurizer Relief Lines, Vessel Head Vent Line, and Flange Monitoring Lines.

8. Main Feedwater line from the Flued Head in the Valve Rooms to the Steam Generators via the 16" Main Feedwater lines. The 6" Bypass Lines from the 16" Main Feedwater lines to the Steam Generators.

B. Monitoring of the above systems (or portions of) shall be performed for temperatures at ambient, 250° (245°-255°), 350° (345°-355°), 450° (445°-455°) and 557° (553°-560°) and return to ambient.

C. The following are the objectives to verify that system support components do **NOT** interfere with the pipe thermal growth:

   1. To verify that load settings of selected piping system Dynamic Snubbers (DS) are NOT fully extended or retracted, Variable Spring (VS) and Constant Spring (CS) remain in their working range and clearance gaps of Pipe Rupture Protective Devices (PD) are properly set to allow the piping to move without obstruction or binding.

1.2 SCOPE (continued)

2. To obtain measurements of the Reactor Coolant Loop support and restraint gaps during plant heat up and after cool down to accomplish the following:

   a. To verify support shim and restraint gaps allow unrestricted growth of the Reactor Coolant Piping.

   b. To verify the expected thermal displacement behavior of the Reactor Coolant equipment supports and major components.

   c. To size support shims.

2.0 REFERENCES

2.1 Performance References

A. SMP-4.0, Watts Bar Nuclear Plant Unit 2 System Completion and Turnover

B. SMP-9.0, Conduct of Testing

C. MAI-4.2A, Piping/Tubing Supports

D. 2-PTI-068-01, HFT - Heat up and Cool down

E. NPG-SPP-12.7, Computer Software Control

F. Mechanical Isometric Drawings

1. 47W400-100, SYSTEM N3-1-01T ISOMETRIC-STATIC & THERMAL ANALYSIS OF MS PIPING

2. 47W400-101, SYSTEM N3-1-01T ISOMETRIC-STATIC & THERMAL ANALYSIS OF MS PIPING

3. 47W400-102, SYSTEM N3-1-01T ISOMETRIC-STATIC & THERMAL ANALYSIS OF MS PIPING

4. 47W400-103, SYSTEM N3-1-01T ISOMETRIC-STATIC & THERMAL ANALYSIS OF MS PIPING

5. 47W400-200, SYSTEM N3-1-1A ISOMETRIC-STATIC, THERMAL & DYNAMIC ANALYSIS OF MS PIPING

6. 47W400-201, SYSTEM N3-1-1A ISOMETRIC-STATIC, THERMAL & DYNAMIC ANALYSIS OF MS PIPING

2.1 Performance References (continued)

7. 47W400-202, SYSTEM N3-1-1A ISOMETRIC-STATIC, THERMAL & DYNAMIC ANALYSIS OF MS PIPING

8. 47W400-203, SYSTEM N3-1-1A ISOMETRIC-STATIC, THERMAL & DYNAMIC ANALYSIS OF MS PIPING

9. 2-47W400-207, PROBLEM N3-01-11A 001 MAIN STEAM LOOP 4 MSIV BYPASS LINE

10. 2-47W400-212, PROBLEM 0600250-07-02 015-LOOP 2 STEAM GENERATOR BLOWDOWN FROM SG TO SCV PENETRATION X-14A

11. 2-47W400-220, PROBLEM 0600250-06-01 001-LOOP 1 MAIN STEAM LINE FROM STEAM GENERATOR TO VALVE VAULT ANCHOR

12. 2-47W400-220A, PROBLEM 0600250-06-01 001-LOOP 1 MAIN STEAM LINE FROM STEAM GENERATOR TO VALVE VAULT ANCHOR

13. 2-47W400-221, PROBLEM 0600250-06-02 001-LOOP 2 MAIN STEAM LINE FROM STEAM GENERATOR TO VALVE VAULT ANCHOR

14. 2-47W400-221A, PROBLEM 0600250-06-02 001-LOOP 2 MAIN STEAM LINE FROM STEAM GENERATOR TO VALVE VAULT ANCHOR

15. 2-47W400-222, PROBLEM 0600250-06-02 003-LOOP 3 MAIN STEAM LINE FROM STEAM GENERATOR TO VALVE VAULT ANCHOR

16. 2-47W400-222A, PROBLEM 0600250-06-02 003-LOOP 3 MAIN STEAM LINE FROM STEAM GENERATOR TO VALVE VAULT ANCHOR

17. 2-47W400-223, PROBLEM 0600250-06-02 004-LOOP 4 MAIN STEAM LINE FROM STEAM GENERATOR TO VALVE VAULT ANCHOR

18. 2-47W400-223A, PROBLEM 0600250-06-02 004-LOOP 4 MAIN STEAM LINE FROM STEAM GENERATOR TO VALVE VAULT ANCHOR

2.1 Performance References (continued)

19. 2-47W400-226, PROBLEM N3-01-06A 001 - LOOP 1 MSIV BYPASS LINE

20. 2-47W400-227, PROBLEM 0600250-07-01 015 - LOOP 1 STEAM GENERATOR BLOWDOWN FROM SG TO SCV PENETRATION X-14D

21. 2-47W400-228, PROBLEM 0600250-07-03 015-LOOP 3 STEAM GENERATOR BLOWDOWN FROM SG TO SCV PENETRATION X-14C

22. 2-47W400-228A, PROBLEM 0600250-07-03 015-LOOP 3 STEAM GENERATOR BLOWDOWN FROM SG TO SCV PENETRATION X-14C

23. 2-47W400-229, PROBLEM 0600250-07-04 015-LOOP 4 STEAM GENERATOR BLOWDOWN FROM SG TO SCV PENETRATION X-14B

24. 2-47W400-230, PROBLEM N3-01-07A 001 - LOOP 3 MSIV BYPASS LINE

25. 2-47W400-231, PROBLEM 0600250-07-05 015-LOOP 4 STEAM GEN BLOWDOWN PIPING FROM SCV PEN X-14A, X-14B, X-14C, AND X-14D TO AN IN-LINE ANCR W/ CLASS H PIPING

26. 2-47W400-232, PROBLEM 0600250-07-05 015-LOOP 4 STEAM GEN BLOWDOWN PIPING FROM SCV PEN X-14A, X-14B, X-14C, AND X-14D TO AN IN-LINE ANCR W/ CLASS H PIPING

27. 2-47W400-233, PROBLEM N3-01-08A 001 MAIN STEAM LOOP 2 MSIV BYPASS LINE

28. 2-47W400-236, 001 - MAIN STEAM TO MSRH'S 2A-2, 2B-2, 2C-2 ANALYSIS ISOMETRIC

29. 47W400-237, 001 - MAIN STEAM TO MSRH 2A-1, 2B-1, & 2C-1 ANALTSIS ISOMETRIS

30. 47W400-242, MAIN STEAM PIPING TO MSRH'S 2A-1, 2B-1 & 2C-1 ANALYSIS ISOMETRIC

31. 2-47W400-243, 001 - MAIN STEAM TO MFPT AND MSRH'S 2A-2, 2B-2, 2C-2 ANALYSIS ISOMETRIC

2.1 Performance References (continued)

32. 2-47W400-244, 001 - MAIN STEAM TO MFPT ANALYSIS ISOMETRIC

33. 2-47W400-245, 001 - MAIN STEAM TO MFPT AND GLAND STEAM SUPPLY ANALYSIS ISOMETRIC

34. 2-47W401-159, PROBLEM N3-03-R04A 003 - STEAM GENERATOR NOZZLE WARMING LINE FOR MAIN FEEDWATER LOOP 1

35. 2-47W401-212, PROBLEM N3-03-16A 003 - MFW BYPASS & AFW SPLY FROM INLINE ANCR WITH N3-03-15A & -19A TO ANCR WITH N3-03-20A & STGEN #1

36. 2-47W401-223, PROBLEM 0600250-02-01 003 - LOOP 1 MAIN FEEDWATER LINE FROM VALVE VAULT ANCHOR TO STEAM GENERATOR

37. 2-47W401-224, PROBLEM 0600250-02-01 003 - LOOP 1 MAIN FEEDWATER LINE FROM VALVE VAULT ANCHOR TO STEAM GENERATOR

38. 2-47W401-225, PROBLEM 0600250-02-03 003 - LOOP 3, MAIN FEEDWATER LINE FROM VALVE VAULT ANCHOR TO STEAM GENERATOR

39. 2-47W401-226, PROBLEM 0600250-02-04 003 - LOOP 4, MAIN FEEDWATER LINE FROM VALVE ANCHOR TO STEAM GENERATOR

40. 2-47W401-227, PROBLEM 0600250-02-11 003 - STEAM GENERATOR NOZZLE WARMING LINE FOR MAIN FW LOOP 3 & MAIN FW DRAIN LINE OUTSIDE SCV FOR LOOP 3

41. 2-47W401-228, PROBLEM 0600250-02-10 003 - STEAM GENERATOR NOZZLE WARMING LINE FOR MAIN FW LOOP 2 & MAIN FW DRAIN LINE OUTSIDE SCV FOR LOOP 2

42. 2-47W401-230, PROBLEM N3-03-R05A 003 - STEAM GENERATOR NOZZLE WARMING LINE FOR MAIN FEEDWATER LOOP 4

43. 2-47W406-320, PROB N3-62-13R 062 - LTDN LINE FROM REGENERATIVE HEAT EXCHANGER TO SCV PEN X-15

2.1 Performance References (continued)

44. 2-47W406-320A, PROB N3-62-13R 062 - LETDOWN LINE FROM REGENERATIVE HEAT EXCHANGER TO SCV PENETRATION X-15

45. 2-47W406-320B, PROB N3-62-13R 062 - LETDOWN LINE FROM REGENERATIVE HEAT EXCHANGER TO SCV PENETRATION X-15

46. 2-47W406-321, PROB N3-62-14R 062 - CHARGING LINE FROM REGEN HX TO LOOP 1 & 4 COLD LEGS & TO IN-LINE ANCR ON AUX PZR SPRAY LINE

47. 2-47W406-321A, PROB N3-62-14R 062 - CHRG LINE FROM REGEN HEAT EX TO LOOP 1 & 4 COLD LEGS & TO IN-LINE ANCR ON AUX PRESSURE SPRAY LINE

48. 2-47W406-321B, PROB N3-62-14R 062 - CHARGING LINE FROM REGEN HX TO LOOP 1 & 4 COLD LEGS & TO IN-LINE ANCR ON AUX PZR SPRAY LINE

49. 2-47W406-321C, PROB N3-62-14R 062 - CHRG LINE FROM REGEN HEAT EX TO LOOP 1 & 4 COLD LEGS & TO IN-LINE ANCR ON AUX PRESSURE SPRAY LINE

50. 2-47W406-348, PROBLEM 0600250-08-10 062 - LETDOWN LINE FROM LOOP 3 CROSSOVER LEG TO REGENERATIVE HEAT EXCHANGER AND DRAIN LINE

51. 2-47W406-348A, PROBLEM 0600250-08-10 062 - LETDOWN LINE FROM LOOP 3 CROSSOVER LEG TO REGENERATIVE HEAT EXCHANGER AND DRAIN LINE

52. 2-47W406-349, PROBLEM 0600250-08-12 062 - EXCESS LETDOWN LINE FROM LOOP 3 LEG TO EXCESS LETDOWN HEAT EXCHANGER

53. 2-47W406-349A, PROBLEM 0600250-08-12 062 - EXCESS LETDOWN LINE FROM LOOP 3 LEG TO EXCESS LETDOWN HEAT EXCHANGER

54. 2-47W406-359, PROBLEM N3-62-33A 062 - BORON INJECTION LINE FROM BIT TO SCV PEN X-22 AND IN-LINE ANCR W/PROB N3-62-31A

2.1 Performance References (continued)

55. 2-47W427-209, PROBLEM N3-03-16A 003 - MFW BYPASS AND AFW SUPPLY FROM INLINE ANCHOR W/ N3-03-15A & -19A TO ANCHOR W/ N3-03-20A & STEAM GENERATOR #1

56. 2-47W427-216, PROBLEM N3-03-18A 003 - MFW BYP & AFW SPLY FROM IN-LINE ANCR -03-15A & -17A TO AN IN-LINE ANCR W/N3-03-21A & S/G #4 THRU SCV PEN X-8D

57. 2-47W427-216A, PROBLEM N3-03-18A 003 - MFW BYP & AFW SPLY FROM IN-LINE ANCR -03-15A & -17A TO AN IN-LINE ANCR W/N3-03-21A & S/G #4 THRU SCV PEN X-8D

58. 2-47W427-217, PROBLEM N3-03-18A 003 - MFW BYP & AFW SPLY FROM IN-LINE ANCR -03-15A & -17A TO AN IN-LINE ANCR W/N3-03-21A & S/G #4 THRU SCV PEN X-8D

59. 2-47W427-219, PROBLEM N3-03-24A 003 - MFW BYPASS & AFW SUPPLY FROM SCV PEN X-40A THROUGH SCV PEN X-8B, TO S/G #2

60. 2-47W427-219A, PROBLEM N3-03-24A 003 - MFW BYPASS & AFW SUPPLY FROM SCV PEN X-40A THROUGH SCV PEN X-8B, TO S/G #2

61. 2-47W427-224, PROB 0600250-05-01 - 003 - MFW BYPASS AND AFW SPLY FROM SCV PEN X-40B & IN-LINE ANCHOR WITH CL H PIPING, THROUGH SCV X-8C, TO STGEN #3

62. 2-47W427-227, PROB 0600250-02-11 003 STGEN NOZZLE WARMING LINE FOR MAIN FEEDWATER LOOP 3 & MAIN FEEDWATER DRAIN LINE OUTSIDE SCV FOR LOOP 3

63. 2-47W427-231, PROBLEM N3-03-06A 003 - AFW PUMP TURBINE STEAM SUPPLY LOOPS 1 & 4 MAIN STEAM LINES TO TURBINE & EXHAUST FROM TURBINE TO ATMOSPHERE

64. 2-47W427-233, PROBLEM N3-03-20A 003 - AFW PIPING FROM IN-LINE ANCHORS WITH N3-03-15A AND N3-03-16A TO SCV PEN X-40A

65. 2-47W427-234, PROBLEM 0600250-05-01 003 - MFW BYPASS AND AFW SPLY FROM SCV PEN X-40B AND AN IN-LINE ANCR WITH CL h PIPING, THROUGH SCV X-8C, TO S/G#3

2.1 Performance References (continued)

66. 2-47W432-208, PROBLEM N3-74-04A 074 - DISCHARGE FROM RHR PUMPS TO SCV PENETRATIONS

67. 2-47W432-208A, PROBLEM N3-74-04A 074 - DISCHARGE FROM RHR PUMPS TO SCV PENETRATIONS

68. 2-47W432-209, PROBLEM N3-74-04A 074 - DISCHARGE FROM RHR PUMPS TO SCV PENETRATIONS

69. 2-47W432-210, PROBLEM N3-74-16A 074 - RHR PUMP MINIFLOW AND LET DOWN HX BRANCH

70. 2-47W432-211, PROBLEM N3-74-04A 074 - DISCHARGE FROM RHR PUMPS TO SCV PENETRATIONS

71. 2-47W432-216, PROBLEM 0600250-03-01 074 - RHR PIPING FROM LOOP 4 HOT LEG TO SCV PENETRATION X107

72. 2-47W435-214, PROB N3-63-04A 063 - SAFETY INJ PUMP DISCH LINES FROM SI PUMPS 2A & 2B TO SCV PENETRATIONS X-21, X-30, X-32 & X-33

73. 2-47W435-214A, PROB N3-63-04A 063 - SAFETY INJ PUMP DISCHARGE LINES FROM SI PUMP 2A & 2B TO SCV PENETRATIONS X-21, X-30, X-32 & X-33

74. 2-47W435-215, PROB N3-63-04A 063 - SAFETY INJ PUMP DISCHARGE LINES FROM SI PUMP 2A & 2B TO SCV PENETRATIONS X-21, X-30, X-32 & X-33

75. 2-47W435-218, PROBLEM 0600350-09-06 063 - SAFETY INJIN-LINE ANCR W/STRESS PROB 0600250-09-05 TON LOOPS 2 & 3 COLD LEGS

76. 2-47W435-253, PROBLEM 0600250-09-11; 063 - SAFETY INJECTION FROM SCV PEN X-17 TO LOOPS 1 & 3 HOT LEG

77. 2-47W435-255, PROBLEM 0600250-09-10 063 - SAFETY INJECTION FROM IN-LINE ANCHOR WITH N3-63-04R TO LOOP 2 HOT LEG

78. 2-47W435-256, PROBLEM 0600250-09-11; 063 - SAFETY INJECTION FROM SCV PEN X-17 TO LOOPS 1 & 3 HOT LEGS

2.1 Performance References (continued)

79. 2-47W435-262, PROBLEM 0600250-09-01; 063 - SAFETY INJECTION FROM SCV PENETRATION X-20A TO LOOPS 1 & 4 COLD LEGS AND LOOPS 1 & 4 COLD LEGS ACCUMUKATORS

80. 2-47W435-263, PROBLEM 0600250-09-01 063 - SAFETY INJ FROM SCV PEN X-20A TO LOOPS 1 & 4 COLD LEGS AND LOOPS 1 & 4 COLD LEG ACC TANKS INCLUDING ACC 4 FILL LINE

81. 2-47W435-264, PROBLEM 0600250-09-05 063 - SIS FROM SCV PEN X-22 & X-30 TO LOOPS 1 & 4 COLD LEGS & MULTI IN-LINE ANCHORS ON OTHER SIS STRESS PROBLEMS

82. 2-47W435-264A, PROBLEM 0600250-09-05 063 - SIS FROM SCV PEN X-22 & X-30 TO LOOPS 1 & 4 COLD LEGS & MULTI IN-LINE ANCHORS ON OTHER SIS STRESS PROBLEMS

83. 2-47W435-265, PROBLEM 0600250-09-05 063 - SIS FROM SCV PEN X-22 & X-30 TO LOOPS 1 & 4 COLD LEGS & MULTI IN-LINE ANCHORS ON OTHER SIS STRESS PROBLEMS

84. 2-47W435-265A, PROBLEM 0600250-09-05 063 - SIS FROM SCV PEN X-22 & X-30 TO LOOPS 1 & 4 COLD LEGS & MULTI IN-LINE ANCHORS ON OTHER SIS STRESS PROBLEMS

85. 2-47W435-267, PROB 0600250-09-02 063 SAFETY INJ FROM SCV PEN X-20B TO LOOPS 2 & 3 COLD LEGS & LOOPS 2 & 3 COLD LEG ACCUMULATORS

86. 2-47W435-267A, PROB 0600250-09-02 063 SAFETY INJ FROM SCV PEN X-20B TO LOOPS 2 & 3 COLD LEGS & LOOPS 2 & 3 COLD LEG ACC

87. 2-47W435-267B, PROB 0600250-09-02 063 SAFETY INJ FROM SCV PEN X-20B TO LOOPS 2 & 3 COLD LEGS & LOOPS 2 & 3 COLD LEG ACCUMULATORS

2.1 Performance References (continued)

88. 2-47W435-272, RPOB 0600250-09-03 063 - SAFETY INJ PIPING FROM PEN X-33 TO IN-LINE ANCHORS W/ STRESS PROB N3-63-01R & 0600250-09-01

89. 2-47W435-274, PROB N3-63-08A 063 SCV PEN X-107 & CNTMT SUMP PEN X-19A & B TO SUCTION NOZ RHR AND CNTMT SPRAY PUMPS 2A & 2B & IN-LINE ANCR PROB N3-63-02A & N3-74-04A

90. 2-47W435-275, PROB N3-63-08A 063 - SCV PEN X-107 & PEN X-19A & B TO RHR PUMPS 2A & 2B & IN-LINE ANCR WITH STRESS PROB N3-63-02A & N3-74-04A

91. 2-47W435-276, PROB N3-63-08A 063 SCV PEN X-107 AND PEN X-19A & B TO RHR PUMPS 2A & 2B AND IN-LINE ANCR WITH STRESS PROBLEMS N3-63-02A & N3-74-04A

92. 2-47W435-277, PROB N3-63-08A 063 SCV PEN X-107 & CNTMT SUMP PEN X-19A & B TO SUC NOZ RHR AND CNTMT SPRAY PUMPS 2A & 2B & IN-LINE ANCR PROB N3-63-02A & N3-74-04A

93. 2-47W435-278, PROB N3-63-08A 063 SCV PEN X-107 & CNTMT SUMP PEN X-19A & B TO SUC NOZ RHR AND CNTMT SPRAY PUMPS 2A & 2B & IN-LINE ANCR PROB N3-63-02A & N3-74-04A

94. 2-47W435-279, PROB N3-63-08A 063 SIS SCV PEN X-107 & CNTMT SUMP PEN X-19A & B TO SUC NOZ RHR AND CNTMT SPRAY PUMPS 2A & 2B & IN-LINE ANCR PROB N3-63-02A & N3-74-04A

95. 2-47W435-280, PROB N3-63-01R 063 - SAF INJ FROM IN-LINE ANCR W/STRESS PROB 0600250-09-03 TO 2 IN-LINE ANCR W/STRESS PROB 0600250-09-02

96. 2-47W435-283, PROBLEM N3-63-02R 063 - SAFETY INJECTION FROM SCV PEN X-32 TO IN-LINE ANCR W/STRESS PROBLEM N3-63-03R & 0600250-09-11

97. 2-47W435-284, PROB N3-63-04R 063 - SAF INJ SCV PEN X-21 IN-LINE ANCR W/STRESS PROB 0600250-09-10, 0600250-03-01 & N3-63-05R

2.1 Performance References (continued)

98. 2-47W435-284A, PROB N3-63-04R 063 - SAF INJ SCV PEN X-21 TO IN-LINE ANCR W/STRESS PROB 0600250-09-10, 0600250-03-01 & N3-63-05R

99. 2-47W435-285, PROBLEM N3-63-03R 063 - SAFETY INJ FROM IN-LINE ANCR W/ STRESS PROB N3-63-02R TO IN-LINE ANCR W/ STRESS PROBLEM 0600250-09-11

100. 2-47W465-206, PROBLEM N3-68-04R 068 - PRESSURIZER SPRAY LINE FROM LOOPS 1 & 2 COLD LEGS TO PRESSURIZER SPRAY NOZZLE

101. 2-47W465-210, PROBLEM N3-68-03R 068 - 2” RCS DRAIN LINE FROM #1 RCL CROSSOVER LEG TO BOX ANCHOR

102. 2-47W465-211, PROBLEM N3-68-05R 068 - PRESSURIZER NOZZLES TO PRESS, RELIEF TANK TO CVCS TO N3-68-22R

103. 2-47W465-212, PROBLEM N3-68-05R 068 - PRESSURIZER NOZZLES TO PRESS, RELIEF TANK TO CVCS TO N3-68-22R

104. 2-47W465-218, PROBLEM 0600250-13-10 068 - RC LOOP 2 CROSSOVER LEG DRAIN LINE TO BOX ANCHOR

105. 2-47W465-221, PROBLEM 0600250-13-01 068 - REACTOR COOLANT 14” PRESSURIZER SURGE LINE AT HOT LEG LOOP 2 TO BASE OF PRESSURIZER

106. 2-47W465-224, PROBLEM 0600250-13-12 068 - RC LOOP 4 CROSSOVER LEG DRAIN LINE TO ANCHOR

107. 2-47W465-236, PROBLEM N3-68-10R SYS - 068 1” REACTOR PRESSURE VESSEL HEAD VENTING SYS FROM VESSEL HEAD THROUGH 5” DIA WELD CAP THROUGH 1” WELD BOSS ATTACHED TO 12" PZR RLF

108. 2-47W465-246, PROBLEM N3-68-28R 68 - 3/4” PRESSURIZER SAFETY RELIEF VALVE DRAIN LINES

2.2 Developmental References

A. Unit 2 Final Safety Analysis Report-Amendment 112

1. Section 3.9.2

2. Chapter 14 - Table 14.2-1, Sheets 73, 78 and 79 of 89

B. Drawings

1. Flow Diagrams - None

2. Electrical - None

3. Mechanical - None

4. Logic/Control - None

5. Vendor Drawings - None

6. Structural Steel Drawings:

a. 2-48N410, Rev 0, STRUCTURAL STEEL EQUIPMENT SUPPORT REACTOR SUPPORTS

b. 48N412, Rev 14, STRUCTURAL STEEL EQUIPMENT SUPPORT SGRC PUMP VERTICAL COLUMN

DRA 55880-001, Rev 1

c. 48N413, Rev 5, STRUCTURAL STEEL EQUIPMENT SUPPORT LOWER STEAM GENERATOR & PUMP TIE ROD SUPPORTS & ARRANGEMENT

d. 48N414, Rev 19, STRUCTURAL STEEL EQUIPMENT SUPPORT LOWER SG SUPPORT

e. 48N415, Rev 11, STRUCTURAL STEEL EQUIPMENT SUPPORT TIE RODS & DETAILS

f. 48N416, Rev 7, STRUCTURAL STEEL EQUIPMENT SUPPORT UPPER STEAM GENERATOR SUPPORT & ARRANGEMENT

2.2 Developmental References (continued)

g. 48N417, Rev 13, STRUCTURAL STEEL EQUIPMENT SUPPORT UPPER STEAM GENERATOR SUPPORT

DRA 55880-004,Rev 1

h. 48N418, Rev 15 STRUCTURAL STEEL EQUIPMENT SUPPORT UPPER STEAM GENERATOR SUPPORT DETAILS

DRA 55880-016, Rev 0

i. 48N419, Rev 18, STRUCTURAL STEEL EQUIPMENT SUPPORT PRESSURIZER SUPPORT

DRA 55880-012, Rev 0

j. 48N421, Rev 19, STRUCTURAL STEEL EQUIPMENT SUPPORT CROSS OVER LEG SUPPORT

k. 48N422, Rev 9, STRUCTURAL STEEL EQUIPMENT SUPPORT CROSS OVER LEG VERTICAL RUN RESTRAINT GENERAL ARRANGEMENT

DRA 55880-009, Rev 0

l. 48W1350-1, Rev 5, PIPE RUPTURE PROTECTION STRUCTURAL STEEL RESTRAINT M2S

m. 48W1350-2, Rev 6, PIPE RUPTURE PROTECTION STRUCTURAL STEEL RESTRAINT M2S

n. 48W1352-2, Rev 14, MAIN STEAM LINES PIPE RUPT PROTECTION RESTRAINTS L42D, L12D, L22D, L32D

o. 48W1354-2, Rev 3, PIPE RUPTURE PROTECTION STRUCTURAL STEEL G2W/MS, H1W/MS, G2E/MS-2 & H1E/MS-2

p. 48W1354-3, Rev 4, PIPE RUPTURE PROTECTION STRUCTURAL STEEL G2E/MS & H1E/MS-2

q. 48W1700-4, Rev 7, STRUCTURAL STEEL PLAN ELEV 743'-3" INSIDE CONTAINMENT

r. 48W1700-5, Rev 4, STRUCTURAL STEEL PLAN ELEV, 754'-1 9/16" INSIDE CONTAINMENT

2.2 Developmental References (continued)

s. 48W1700-6, Rev 6, STRUCTURAL STEEL SECTIONS & DETAILS INSIDE CONTAINMENT

t. 48W1700-8, Rev 8, STRUCTURAL STEEL M.S. RING RESTRAINT INSIDE CONTAINMENT

u. 2-48W1700-14, Rev 0, STRUCTURAL STEEL SECTIONS & DETAILS INSIDE CONTAINMENT PD00-11

DRA 54304-3, Rev 1

v. 2-48W1700-15, Rev 0, STRUCTURAL STEEL SECTIONS & DETAILS INSIDE CONTAINMENT PD00-12

DRA 54304-1, Rev 1

w. 48W1700-16, Rev 4, STRUCTURAL STEEL SECTIONS & DETAILS INSIDE CONTAINMENT

x. 48W1700-17, Rev 7, STRUCTURAL STEEL SECTIONS & DETAILS INSIDE CONTAINMENT

y. 2-48W1700-18, Rev 0, STRUCTURAL STEEL SECTIONS & DETAILS INSIDE CONTAINMENT PD00-17

DRA 54304-2, Rev 1

z. 48W1700-19, Rev 6, STRUCTURAL STEEL SECTIONS & DETAILS INSIDE CONTAINMENT

aa. 48W1700-20, Rev 10, STRUCTURAL STEEL SECTIONS & DETAILS INSIDE CONTAINMENT

bb. 48W1700-21, Rev 11, STRUCTURAL STEEL SECTIONS & DETAILS INSIDE CONTAINMENT

cc. 2-48W1700-22, Rev 0, STRUCTURAL STEEL SECTIONS & DETAILS INSIDE CONTAINMENT PD00-23

DRA 54304-4, Rev 0

dd. 48W1700-23, Rev 7, STRUCTURAL STEEL SECTIONS & DETAILS INSIDE CONTAINMENT

2.2 Developmental References (continued)

ee. 48W1700-24, Rev 15, STRUCTURAL STEEL SECTIONS & DETAILS INSIDE CONTAINMENT

ff. 48W1700-25, Rev 4, STRUCTURAL STEEL SECTIONS & DETAILS INSIDE CONTAINMENT

gg. 48W1700-26, Rev 5, STRUCTURAL STEEL SECTIONS & DETAILS INSIDE CONTAINMENT

hh. 48W1700-27, Rev 12, STRUCTURAL STEEL SECTIONS & DETAILS INSIDE CONTAINMENT

ii. 48W1700-28, Rev 5, STRUCTURAL STEEL SECTIONS & DETAILS INSIDE CONTAINMENT

jj. 48W1700-29, Rev 6, STRUCTURAL STEEL SECTIONS & DETAILS INSIDE CONTAINMENT

kk. 48W1700-30, Rev 5, STRUCTURAL STEEL SECTIONS & DETAILS INSIDE CONTAINMENT

ll. 48W1701-5, Rev 4, STRUCTURAL STEEL SECTIONS & DETAILS INSIDE CONTAINMENT

mm. 48W1701-7, Rev 4, STRUCTURAL STEEL SECTIONS & DETAILS INSIDE CONTAINMENT

nn. 48W1701-8, Rev 15, STRUCTURAL STEEL SECTIONS & DETAILS INSIDE CONTAINMENT

oo. 48W1701-9, Rev 4, STRUCTURAL STEEL SECTIONS & DETAILS INSIDE CONTAINMENT

pp. 48W1701-13, Rev 10, STRUCTURAL STEEL SECTIONS & DETAILS INSIDE CONTAINMENT

qq. 48W1701-14, Rev 15, STRUCTURAL STEEL SECTIONS & DETAILS INSIDE CONTAINMENT

rr. 48W1701-15, Rev 11, STRUCTURAL STEEL SECTIONS & DETAILS INSIDE CONTAINMENT

ss. 48W1701-16, Rev 6, STRUCTURAL STEEL SECTIONS & DETAILS INSIDE CONTAINMENT

2.2 Developmental References (continued)

tt. 48W1701-17, Rev 7, STRUCTURAL STEEL SECTIONS & DETAILS INSIDE CONTAINMENT

uu. 48W1701-18, Rev 3, STRUCTURAL STEEL SECTIONS & DETAILS INSIDE CONTAINMENT

vv. 48W1702-10, Rev 7, STRUCTURAL STEEL SECTIONS & DETAILS OUTSIDE CRANE WALL

ww. 48W1702-16, Rev 1, STRUCTURAL STEEL COMPOSITE - PROTECTIVE DEVICES OUTSIDE CRANE WALL

xx. 48W1702-17, Rev 4, STRUCTURAL STEEL SECTIONS & DETAILS OUTSIDE CRANE WALL

DRA 53580-817, Rev 0
DRA 53580-821, Rev 0

yy. 48W1702-18, Rev 1, STRUCTURAL STEEL SECTIONS & DETAILS OUTSIDE CRANE WALL

DRA 53580-818, Rev 0

zz. 48W1702-19, Rev 3, STRUCTURAL STEEL SECTIONS & DETAILS OUTSIDE RANE WALL

DRA 53580-819, Rev 0

aaa. 48W1703-5, Rev 10, STRUCTURAL STEEL SECTIONS & DETAILS INSIDE CONTAINMENT

DRA 53580-810, Rev 0

bbb. 48W1703-6, Rev 7, STRUCTURAL STEEL SECTIONS & DETAILS INSIDE CONTAINMENT

DRA 53580-809, Rev 0

ccc. 48W1703-11, Rev 12, STRUCTURAL STEEL SECTIONS & DETAILS INSIDE CONTAINMENT

DRA 53580-808, Rev 0

2.2 Developmental References (continued)

ddd. 48W1703-13, Rev 1, STRUCTURAL STEEL SECTION & DETAILS INSIDE CONTAINMENT

DRA 53580-812, REV 0

eee. 48W1707-1, Rev 6, STRUCTURAL STEEL PROTECTIVE DEVICES SOUTH MAIN STEAM VALVE ROOMS

fff. 48W1707-3, Rev 11, STRUCTURAL STEEL PLAN-ELEV 729'-0 " SOUTH MAIN STEAM VALVE ROOMS

ggg. 48W1707-5, Rev 12, STRUCTURAL STEEL PLAN ELEV 740'-2" SOUTH MAIN STEAM VALVE ROOMS

hhh. 48W1707-6, Rev 7, STRUCTURAL STEEL PLAN ELEV 747'-3" SOUTH MAIN STEAM VALVE ROOMS

iii. 48W1707-8, Rev 13, STRUCTURAL STEEL PLAN ELEV 760'-3" SOUTH MAIN STEAM VALVE ROOMS

jjj. 48W1707-9, Rev 8, STRUCTURAL STEEL SECTIONS SOUTH MAIN STEAM VALVE ROOMS

kkk. 48W1707-10, Rev 8, STRUCTURAL STEEL SECTIONS SOUTH MAIN STEAM VALVE ROOMS

lll. 48W1707-11, Rev 9, STRUCTURAL STEEL SECTIONS SOUTH MAIN STEAM VALVE ROOMS

mmm. 48W1707-12, Rev 10, STRUCTURAL STEEL SECTIONS & DETAILS SOUTH MAIN STEAM VALVE ROOMS

nnn. 48W1707-13, Rev 11, STRUCTURAL STEEL SECTIONS & DETAILS SOUTH MAIN STEAM VALVE ROOMS

ooo. 48W1707-14, Rev 15, STRUCTURAL STEEL SECTIONS & DETAILS SOUTH MAIN STEAM VALVE ROOMS

ppp. 48W1707-21, Rev 10, STRUCTURAL STEEL SECTIONS & DETAILS SOUTH MAIN STEAM VALVE ROOMS

qqq. 48W1707-22, Rev 10, STRUCTURAL STEEL SECTIONS & DETAILS SOUTH MAIN STEAM VALVE ROOM

2.2 Developmental References (continued)

rrr. 48W1707-23, Rev 12, STRUCTURAL STEEL SECTIONS & DETAILS SOUTH MAIN STEAM VALVE ROOMS

sss. 48W1707-24, Rev 7, STRUCTURAL STEEL SECTIONS & DETAILS SOUTH MAIN STEAM VALVE ROOMS

ttt. 48W1707-26, Rev 7, STRUCTURAL STEEL PLANS, SECTIONS & DETAILS SOUTH MAIN STEAM VALVE ROOMS

uuu. 48W1708-1, Rev 5, STRUCTURAL STEEL PROTECTIVE DEVICES NORTH MAIN STEAM VALVE ROOMS

vvv. 48Wl708-6, Rev 6, STRUCTURAL STEEL PLAN-ELEV 761'-2" NORTH MAIN STEAM VALVE ROOMS

www. 48W1708-7, Rev 12, STRUCTURAL STEEL SECTION & DETAILS NORTH MAIN STEAM VALVE ROOMS

xxx. 48W1708-8, Rev 12, STRUCTURAL STEEL SECTIONS & DETAILS NORTH MAIN STEAM VALVE ROOMS

yyy. 48W1708-10, Rev 12, STRUCTURAL STEEL SECTIONS & DETAILS NORTH MAIN STEAM VALVE ROOMS

zzz. 48W1708-12, Rev 14, STRUCTURAL STEEL SECTION & DETAILS NORTH MAIN STEAM VALVE ROOMS

aaaa. 48W1708-13, Rev 14, STRUCTURAL STEEL SECTIONS & DETAILS NORTH MAIN STEAM VALVE ROOMS

2.2 Developmental References (continued)

C. Documents

1. USNRC Regulatory Guide 1.68 Initial Test Programs for Water-Cooled Nuclear Power Plants, Revision 2

2. WAT-D-9650, “Westinghouse Letter”

3. LTR-PAFM-11-23, Rev. 1, Watts Bar Unit 2 - RCL Primary Equipment Supports Shim Gap Criteria Summary

4. LTR-PAFM-10-119, Rev. 1, Watts Bar Unit 2 - RCL Piping System Normal Operating Condition and Hot Functional Testing Thermal Displacements

5. 2-TSD-HFT-1, Rev. 4, Test Scoping Document

6. PER 178000 Action 010

Date _____

3.0 PRECAUTIONS AND LIMITATIONS

A. Standard Precautions shall be followed around energized electrical equipment in accordance with TVA Safety Manual Procedure 1021.

B. Steps may be repeated if all components cannot be tested in a step. However, if the test has been exited, prerequisite steps must be re-verified and a Chronological Test Log (CTL) entry made.

C. Discrepancies between component ID tags and the description in a procedure/instruction do not require a Test Deficiency Notice (TDN) in accordance with SMP-14.0, if the UNIDs match, exclusive of place-keeping zeros and train designators (e.g. 2-HS-31-468 vs. 2-HS-031-0468) and the noun description is sufficient to identify the component. If the component label needs to be changed, a Tag Request Form (TR Card) should be processed in accordance with TI-12.14. Make an entry in the CTL and continue testing.

D. All open problems are to be tracked by a corrective action document and entered on the appropriate system punch list.

E. Observe all Radiation Protection (RP) requirements when working in or near radiological areas.

F. Ensure there are no adverse effects to the operation of Unit 1 structures, systems, or components.

G. Test personnel will coordinate with Unit 1 Operations when manipulating Unit 1 equipment if required.

H. All personnel obtaining clearance measurements or other direct data readings should exercise caution when in close proximity to high temperature and/or un-insulated sections of piping or components.

I. As pipe system temperature is raised, constant surveillance is required. To ensure that intermediate plateau temperatures are **NOT** exceeded, 2-PTI-068-01 will administratively control the heat up and cool down sequence.

J. The actual installed lanyard length should be greater than 2 feet, where practical. This will minimize errors caused by movement other than along the measured axis.

K. No support evaluation is required during HOT FUNCTIONAL TEST for temperatures less than 200°F (<200°F) in Class A and B piping.

Date _____

4.0 PREREQUISITE ACTIONS

4.1 Preliminary Actions

NOTE

All initial blanks are to be completed by the Test Director/Startup Test Engineer, except those which show a specific group.

[1] **VERIFY** the test/performance copy of this Preoperational Test Instruction (PTI) is the current revision including any change notices and as needed, each test person assisting in this test has the current revision including any change notices, or appropriate section and attachment data sheets.

_____
TEST DIRECTOR

[2] **ENSURE** special environmental conditions are available for testing, if required.

_____
TEST DIRECTOR

[3] **OBTAIN** copies of the applicable forms from the latest revision of SMP-9.0 **AND**

ATTACH to this PTI, behind the appropriate storage Attachment, for use during the performance of this PTI.

_____
TEST DIRECTOR

[4] **ENSURE** changes to the references listed in Appendix A have been reviewed, recorded in Appendix A, and determined **NOT** to adversely affect the test results.

_____
TEST DIRECTOR

[5] **VERIFY** current revisions and change paper for referenced drawings have been reviewed and determined **NOT** to adversely affect the test performance **AND**

ATTACH documentation of current drawing revision numbers and change paper that were reviewed to the data package.

_____
TEST DIRECTOR

Date _____

4.1 Preliminary Actions (continued)

[6] **EVALUATE** open items in Watts Bar Integrated Task Equipment List (WITEL) **AND**

ENSURE they will **NOT** adversely affect the test performance and results.

A. Subsection 6.1 _____ TEST DIRECTOR

B. Subsection 6.2 _____ TEST DIRECTOR

C. Subsection 6.3 _____ TEST DIRECTOR

D. Subsection 6.4 _____ TEST DIRECTOR

E. Subsection 6.5 _____ TEST DIRECTOR

F. Subsection 6.6 _____ TEST DIRECTOR

G. Subsection 6.7 _____ TEST DIRECTOR

H. Subsection 6.8 _____ TEST DIRECTOR

I. Subsection 6.9 _____ TEST DIRECTOR

J. Subsection 6.10 _____ TEST DIRECTOR

K. Subsection 6.11 _____ TEST DIRECTOR

L. Subsection 6.12[2] _____ TEST DIRECTOR

Date _____

4.1 Preliminary Actions (continued)

[7] **ENSURE** outstanding Design Change Notices (DCN's), Engineering Document Construction Releases (EDCR's) or Temporary Modifications (T-MODs) do **NOT** adversely impact testing **AND**

ATTACH documentation of DCN's, EDCR's and T-MOD's that were reviewed to the data package.

_____
TEST DIRECTOR

[8] **VERIFY** Measuring and Test Equipment (M&TE) required for test performance has been recorded on Measuring and Test Equipment (M&TE) Log, Appendix C.

A. Subsection 6.1

_____
TEST DIRECTOR

B. Subsection 6.2

_____
TEST DIRECTOR

C. Subsection 6.3

_____
TEST DIRECTOR

D. Subsection 6.4

_____
TEST DIRECTOR

E. Subsection 6.5

_____
TEST DIRECTOR

F. Subsection 6.6

_____
TEST DIRECTOR

G. Subsection 6.7

_____
TEST DIRECTOR

H. Subsection 6.8

_____
TEST DIRECTOR

I. Subsection 6.9

_____
TEST DIRECTOR

J. Subsection 6.10

_____
TEST DIRECTOR

K. Subsection 6.11

_____
TEST DIRECTOR

Date _____

4.1 Preliminary Actions (continued)

L. Subsection 6.12[2]

_____
TEST DIRECTOR

[9] **VERIFY** instruction 2-PTI-068-01 is approved and available for use.

_____
TEST DIRECTOR

[10] Bechtel Engineering (BE) has completed all as-built analysis for piping on the following systems to support Thermal Expansion Testing:

A. Residual Heat Removal System (RHR), from the RCS to the RHR Heat Exchangers and from the RHR Heat Exchangers to valves 2-FCV-063-93 (RHR TO COLD LEG 2 & 3 INJECTION ISOLATION), 2-FCV-063-94 (RHR TO COLD LEG 1 & 4 INJECTION ISOLATION), and 2-FCV-063-172 (RHR TO RCS HL 1 & 3 FLOW ISOL VLV).

_____
BECHTEL
ENGINEERING

B. Main Steam System from the Steam Generators to the Turbine Stop and Control Valves and to the Condenser via the Steam Dump Headers.

_____
BECHTEL
ENGINEERING

C. Steam to the Turbine Driven Auxiliary Feedwater Pump.

_____
BECHTEL
ENGINEERING

D. Steam Generator Blowdown from the Steam Generators to the Steam Generator Blowdown Heat Exchangers.

_____
BECHTEL
ENGINEERING

E. Normal Letdown from the RCS to the Letdown Heat Exchanger.

_____
BECHTEL
ENGINEERING

F. Excess Letdown from the RCS to the Excess Letdown Heat Exchanger.

_____
BECHTEL
ENGINEERING

Date _____

4.1 Preliminary Actions (continued)

G. Normal and Alternate Charging from the Regenerative Heat Exchanger to the RCS.

_____
BECHTEL ENGINEERING

H. Auxiliary Spray to the pressurizer.

_____
BECHTEL ENGINEERING

I. Accumulator Safety Injection from the Accumulator Outlet Isolation MOVs to the RCS.

_____
BECHTEL ENGINEERING

J. SI System from 2-FCV-063-93 (RHR TO COLD LEG 2 & 3 INJECTION ISOLATION), 2-FCV-063-94 (RHR TO COLD LEG 1 & 4 INJECTION ISOLATION), and 2-FCV-063-172 (RHR TO RCS HL 1 & 3 FLOW ISOL VLV) to the RCS.

_____
BECHTEL ENGINEERING

K. SI System from 2-FCV-063-156 (SI PUMP 2A-A HOT LEG 1 & 3 INJECTIOIT), 2-FCV-063-157 (SI PUMP 2B-B HOT LEG 2 & 4 INJECTION), and 2-FCV-063-22 (SI PUMPS TO COLD LEG INJECTION) to the RCS.

_____
BECHTEL ENGINEERING

L. SI System from 2-FCV-063-25 (SIS BORON INJ TANK SHUTOFF VLV) AND 2-FCV-063-26 (SIS BORON INJ TANK SHUTOFF VLV) to the RCS.

_____
BECHTEL ENGINEERING

M. Reactor Coolant System including Pressurizer Surge line, Pressurizer Spray lines, Pressurizer Relief lines, Vessel Head Vent lines, and Flange Monitoring lines.

_____
BECHTEL ENGINEERING

Date _____

4.1 Preliminary Actions (continued)

N. Main Feedwater line from the Flued Head in the Valve Rooms to the Steam Generators via the 16" Main Feedwater lines. The 6" Bypass Lines from the 16" Main Feedwater lines to the Steam Generators.

_____
BECHTEL ENGINEERING

[11] **ENSURE** all hangers within the Hot Functional Heat up boundaries have been completed. This should be performed by Bechtel Engineering and Construction, using the closure of all support EDCRs.

_____
BECHTEL ENGINEERING

_____
BECHTEL MECHANICAL CONSTRUCTION

[12] Test Director is to **VERIFY** the Dynamic Snubbers, identified in Attachment 1, have been stroked and met their Acceptance Criteria, by using the Dynamic Snubbers test reports from the contract personnel and approved by Bechtel Engineering. This will also be coordinated with the Dynamic Snubbers serial number to the specific location using the Bechtel's Dynamic Snubbers data base.

_____
TEST DIRECTOR

[13] **VERIFY** the Dynamic Snubbers, identified in Attachment 1, have been installed, adjusted to their cold settings, inspected and accepted, and any protective covers have been removed to support Thermal Expansion Testing.

[13.1] STE for system 001, Main Steam

_____
STARTUP TEST ENGINEER

[13.2] STE for system 003, Main Feedwater

_____
STARTUP TEST ENGINEER

[13.3] STE for system 003B, Auxiliary Feedwater

_____
STARTUP TEST ENGINEER

Date _____

4.1 Preliminary Actions (continued)

[13.4] STE for system 015, Steam Generator Blowdown _____ STARTUP TEST ENGINEER

[13.5] STE for system 062, Chemical Volume and Control _____ STARTUP TEST ENGINEER

[13.6] STE for system 063, Safety Injection _____ STARTUP TEST ENGINEER

[13.7] STE for system 068, Reactor Coolant _____ STARTUP TEST ENGINEER

[13.8] STE for system 074, Residual Heat Removal _____ STARTUP TEST ENGINEER

[14] **VERIFY** the Variable Springs and Constant Springs, identified in Attachment 1, have been installed, unpinned, adjusted to their cold settings, inspected and accepted to support Thermal Expansion Testing.

[14.1] STE for system 001, Main Steam _____ STARTUP TEST ENGINEER

[14.2] STE for system 003, Main Feedwater _____ STARTUP TEST ENGINEER

[14.3] STE for system 003B, Auxiliary Feedwater _____ STARTUP TEST ENGINEER

[14.4] STE for system 015, Steam Generator Blowdown _____ STARTUP TEST ENGINEER

[14.5] STE for system 062, Chemical Volume and Control _____ STARTUP TEST ENGINEER

Date _____

4.1 Preliminary Actions (continued)

[14.6] STE for system 063, Safety Injection

_____
STARTUP TEST ENGINEER

[14.7] STE for system 068, Reactor Coolant

_____
STARTUP TEST ENGINEER

[14.8] STE for system 074, Residual Heat Removal

_____
STARTUP TEST ENGINEER

[15] **VERIFY** Pipe Rupture Protective Devices, identified by Attachment 1, are installed and gaps are at their cold positions and accepted.

[15.1] STE for system 001, Main Steam

_____
STARTUP TEST ENGINEER

[15.2] STE for system 003, Main Feedwater

_____
STARTUP TEST ENGINEER

[15.3] STE for system 003B, Auxiliary Feedwater

_____
STARTUP TEST ENGINEER

[15.4] STE for system 015, Steam Generator Blowdown

_____
STARTUP TEST ENGINEER

[15.5] STE for system 062, Chemical Volume and Control

_____
STARTUP TEST ENGINEER

[15.6] STE for system 063, Safety Injection

_____
STARTUP TEST ENGINEER

[15.7] STE for system 068, Reactor Coolant

_____
STARTUP TEST ENGINEER

Date _____

4.1 Preliminary Actions (continued)

[15.8] STE for system 074, Residual Heat Removal

_____
STARTUP TEST ENGINEER

[16] **VERIFY** the following for RCS Component Supports and Restraints:

A. All RCS Component Supports and Restraints have been installed per applicable drawings and have been found acceptable.

_____ _____
BECHTEL Construction/Bechtel Engineering Signature Date

B. All temporary blocking has been removed.

_____ _____
BECHTEL Construction Signature Date

C. All surfaces where measurements are to be taken are clean and free from rust, dirt, and debris.

_____ _____
BECHTEL Construction Signature Date

D. All points where thermal expansion gaps are to be measured have been identified and marked.

_____ _____
BECHTEL Construction Signature Date

[17] **VERIFY** all predicted test data has been issued.

_____
TEST DIRECTOR

[18] **VERIFY** monitoring location isometrics, for instrumentation locations, have been attached with Attachment 2.

_____
TEST DIRECTOR

[19] **ENSURE** components contained within the boundaries of this test are under the jurisdictional control of Preoperational Startup Engineering (PSE) and/or Plant Operations.

_____
TEST DIRECTOR

Date _____

4.1 Preliminary Actions (continued)

[20] **ENSURE** a review of outstanding Clearances has been coordinated with Operations for impact to the test performance, and

RECORD in Appendix B, Temporary Condition Log, if required.

_____
TEST DIRECTOR

[21] **VERIFY** Work Orders (WOs) have been reviewed to ensure pipe supports, identified by Attachment 1, are **NOT** functionally affected by ongoing work activities.

A. System 001

_____
STARTUP TEST ENGINEER

B. System 003

_____
STARTUP TEST ENGINEER

C. System 015

_____
STARTUP TEST ENGINEER

D. System 062

_____
STARTUP TEST ENGINEER

E. System 063

_____
STARTUP TEST ENGINEER

F. System 068

_____
STARTUP TEST ENGINEER

G. System 074

_____
STARTUP TEST ENGINEER

[22] **ESTABLISH** communications in areas where testing is to be conducted.

_____
TEST DIRECTOR

Date _____

4.2 Special Tools, Measuring and Test Equipment (M&TE), Parts, and Supplies

NOTE
M&TE equivalent to that specified may be used.

[1] The following M&TE is available:

A. Agilent Technologies 34980A Data Logger, with Agilent Technologies 34921 Armature Multiplexer Modules, and Global Specialties 1310, DC type of power supply, or equivalent. Range 0-5 volts DC. Accuracy ± 0.1% at 4 volts - 3 each.

B. Houston Scientific 1850 Series Linear Position Transducers or equivalent. Range 0 - 10 inches, Accuracy ± 0.15% of full scale, as required - 141 each minimum.

C. UniMeasure PA-20-TS Linear Position Transducers. Range 0 - 20 inches, Accuracy ± 0.15% of full scale - 13 each minimum.

D. RTD, single element 100 ohm platinum, Pyromation, Inc. Part # RAT 185H484-012-308-15-F3J012-0. Range 50°F - 600°F, Accuracy ± 2°F, as required - 83 each minimum

E. Digital Thermometers, Fluke Model 52. Range 32°F -650°F, Accuracy ± 10°F - 30 minimum.

[2] The following equipment is available:

A. TVA Laptop Computer - 1 each

B. Machinist's scale, 1/16 inch minimum division, or equivalent - 22 minimum

C. Torpedo levels - 30 minimum

D. Tape Measures, variable lengths - 30 minimum

E. Telescoping Gages, 1/2 - 6 inches - 30 minimum

F. Feeler gages - 30 minimum

Date _____

4.3 Field Preparations

[1] **ENSURE** that Work Orders have been initiated for the removal and reinstallation of insulation.

A. Containment Building, Auxiliary Building and Turbine Building

_____
TEST DIRECTOR

RECORD Work Order _____

RECORD Work Order _____

RECORD Work Order _____

B. For measurement of gaps for Pipe Rupture Protective Devices listed on Sheet 2 of 72 of Attachment 10.

_____
TEST DIRECTOR

RECORD Work Order _____

RECORD Work Order _____

RECORD Work Order _____

[2] **ENSURE** that temporary scaffolding and ladders have been installed, as required, to maintain instruments and record data.

A. Containment Building, Auxiliary Building and Turbine Building

_____
TEST DIRECTOR

RECORD Work Order _____

RECORD Work Order _____

RECORD Work Order _____

Date _____

4.3 Field Preparations (continued)

[3] **ENSURE** that Work Orders for the installation and removal of instrumentation supports have been completed.

A. Containment Building

SYSTEM NO.	WORK ORDER NO.	COMPLETE
001	115626610	☐
003	115626653	☐
015	115626663	☐
062	115626683	☐
063	115626750	☐
068	115626844	☐
074	115626882	☐

_____
TEST DIRECTOR

B. Auxiliary Building

SYSTEM NO.	WORK ORDER NO.	COMPLETE
001	115627360	☐
003	115627430	☐
015	115627473	☐
074	115627527	☐

_____
TEST DIRECTOR

Date _____

4.3 Field Preparations (continued)

C. Turbine Building

SYSTEM NO.	WORK ORDER NO.	COMPLETE
001	115627552	☐

_____
TEST DIRECTOR

[4] **ENSURE** that Work Orders for the installation, removal and maintenance of instrumentation and data acquisition equipment including all cables have been completed.

A. Containment Building

SYSTEM NO.	WORK ORDER NO.	COMPLETE
001	115627628	☐
003	115627749	☐
015	115627843	☐
062	115627883	☐
063	115627941	☐
068	115627970	☐
074	115627983	☐

_____
TEST DIRECTOR

Date _____

4.3 Field Preparations (continued)

B. Auxiliary Building

SYSTEM NO.	WORK ORDER NO.	COMPLETE
001	115627989	☐
003	115628012	☐
015	115628068	☐
074	115628092	☐

_____
TEST DIRECTOR

C. Turbine Building

SYSTEM NO.	WORK ORDER NO.	COMPLETE
001	115628109	☐

_____
TEST DIRECTOR

[5] **ENSURE** a Problem Report Log, Attachment 30, has been established and will be maintained throughout the test.

_____
TEST DIRECTOR

[6] **ENSURE** a Test Deficiency Log, Attachment 32, has been established and will be maintained throughout the test.

_____
TEST DIRECTOR

[7] **ENSURE** all instrumentation, cables and Data Acquisition Systems have been installed and calibrated.

_____
TEST DIRECTOR

[8] **ENSURE** Bechtel Engineering has reviewed as-built monitoring locations and instrumentation installation and it is in accordance with Attachment 2.

_____
BECHTEL
ENGINEERING

Date _____

4.3 Field Preparations (continued)

[9] **ENSURE** the Test Director has reviewed channel, displacement, and temperature input to the Data Acquisition System and **ATTACH** to Attachment 34.

_____
TEST DIRECTOR

[10] **ENSURE** appropriate personnel have been notified and are available to support the test.

_____
TEST DIRECTOR

[11] **ENSURE** the Pre-test briefing includes a discussion about working and recording data in high temperature areas.

_____
TEST DIRECTOR

[12] **CONDUCT** a Pre-test briefing with Test and Operations personnel in accordance with SMP-9.0.

A. Subsection 6.1

_____
TEST DIRECTOR

B. Subsection 6.2

_____
TEST DIRECTOR

C. Subsection 6.3

_____
TEST DIRECTOR

D. Subsection 6.4

_____
TEST DIRECTOR

E. Subsection 6.5

_____
TEST DIRECTOR

F. Subsection 6.6

_____
TEST DIRECTOR

G. Subsection 6.7

_____
TEST DIRECTOR

H. Subsection 6.8

_____
TEST DIRECTOR

I. Subsection 6.9

_____
TEST DIRECTOR

J. Subsection 6.11

_____
TEST DIRECTOR

Date _____

4.3 Field Preparations (continued)

K. Subsection 6.12[2]

_____
TEST DIRECTOR

[13] **PERFORM** a Pretest surveillance walk down, per guidelines of Appendix D, on the following systems **AND**

ENSURE NO interferences exist which might restrain plant heat up:

[13.1] Residual Heat Removal System (RHR), from the RCS to the RHR Heat Exchangers and from the RHR Heat Exchangers to valves 2-FCV-063-93 (RHR TO COLD LEG 2 & 3 INJECTION ISOLATION), 2-FCV-063-94 (RHR TO COLD LEG 1 & 4 INJECTION ISOLATION), and 2-FCV-063-172 (RHR TO RCS HL 1 & 3 FLOW ISOL VLV) and RHR Pump Mini Flow and Let Down HX Branch.

A. Reactor Coolant Loop 4 Hot Leg to the RHR Pump Suctions; 2-47W432-216, 2-47W435-274, 2-47W435-275, 2-47W435-276, 2-47W435-277, 2-47W435-278, 2-47W435-279.

_____
WALK DOWN PERSONNEL

_____
TEST DIRECTOR

B. Pump Suctions to valves 2-FCV-063-93, 2-FCV-063-94 and 2-FCV-063-172; 2-47W432-209, 2-47W432-208, 2-47W432-208A, 2-47W432-211.

_____
WALK DOWN PERSONNEL

_____
TEST DIRECTOR

C. RHR Discharge to Mini Flow and Let Down HX 2-47W432-210

_____
WALK DOWN PERSONNEL

_____
TEST DIRECTOR

Date _____

4.3 Field Preparations (continued)

[13.2] Main Steam System from the Steam Generators to the Turbine Stop and Control Valves and the steam dump headers to the Condensers, including Main Steam MSIV Bypass lines.

A. Steam Generator #1 to the Turbine Stop Valve, including Main Steam MSIV Bypass line; 2-47W400-220, 2-47W400-220A, 47W400-101, 47W400-201, 2-47W400-226.

_____
WALK DOWN PERSONNEL

_____
TEST DIRECTOR

B. Steam Generator #2 to the Turbine Stop Valve, including Main Steam MSIV Bypass line; 2-47W400-221, 2-47W400-221A, 47W400-100, 47W400-200, 2-47W400-233.

_____
WALK DOWN PERSONNEL

_____
TEST DIRECTOR

C. Steam Generator #3 to the Turbine Stop Valve, including Main Steam MSIV Bypass line; 2-47W400-222, 2-47W400-222A, 47W400-100, 47W400-200, 2-47W400-230.

_____
WALK DOWN PERSONNEL

_____
TEST DIRECTOR

D. Steam Generator #4 to the Turbine Stop Valve, including Main Steam MSIV Bypass line; 2-47W400-223, 2-47W400-223A, 47W400-101, 47W400-201, 2-47W400-207.

_____
WALK DOWN PERSONNEL

_____
TEST DIRECTOR

Date _____

4.3 Field Preparations (continued)

E. Stop Valves and Control Valves via the Steam Dump Header to the Steam Dump Valves; 47W400-100, 47W400-200, 47W400-101, 47W400-201, 47W400-102, 47W400-202, 47W400-103, 47W400-203.

_____
WALK DOWN PERSONNEL

_____
TEST DIRECTOR

[13.3] Steam to the Turbine Driven Auxiliary Feedwater pump.

A. Steam from the Stop Valves to the Turbine Driven Auxiliary Feedwater Pump; 47W400-201, 2-47W400-243, 2-47W400-236, 47W400-237, 47W400-242, 2-47W400-244, 2-47W400-245.

_____
WALK DOWN PERSONNEL

_____
TEST DIRECTOR

B. AFW Pump Turbine Steam Supply Loops 1 and 4 Main Steam Lines to Turbine; 2-47W427-231

_____
WALK DOWN PERSONNEL

_____
TEST DIRECTOR

[13.4] Steam Generator Blowdown from the Steam Generators to the Steam Generator Blowdown Heat Exchangers.

A. Steam Generator Blowdown from Steam Generators to Penetration in U-Line wall; 2-47W400-212, 2-47W400-227, 2-47W400-228, 2-47W400-228A, 2-47W400-229, 2-47W400-231, 2-47W400-232.

_____
WALK DOWN PERSONNEL

_____
TEST DIRECTOR

Date _____

4.3 Field Preparations (continued)

[13.5] Chemical and Volume Control System (CVCS)

A. Normal Letdown from the RCS to the Letdown Heat Exchanger; 2-47W406-320, 2-47W406-320A, 2-47W406-320B, 2-47W406-348, 2-47W406-348A, 2-47W432-210.

_____
WALK DOWN PERSONNEL

_____
TEST DIRECTOR

B. Excess Letdown from the RCS to the Excess Letdown Heat Exchanger; 2-47W406-349, 2-47W406-349A.

_____
WALK DOWN PERSONNEL

_____
TEST DIRECTOR

C. Normal and Alternate Charging from the Regenerative Heat Exchanger to the RCS; 2-47W406-321, 2-47W406-321A, 2-47W406-321B, 2-47W406-321C.

_____
WALK DOWN PERSONNEL

_____
TEST DIRECTOR

D. Auxiliary Spray to the Pressurizer; 2-47W406-321, 2-47W406-321A.

_____
WALK DOWN PERSONNEL

_____
TEST DIRECTOR

Date _____

4.3 Field Preparations (continued)

[13.6] Safety Injection (SI) System

A. Accumulator Safety Injection from the Accumulator Outlet Isolation MOVs to the RCS; 2-47W435-262, 2-47W435-263, 2-47W435-267, 2-47W435-267A, 2-47W435-267B.

_____
WALK DOWN PERSONNEL

_____
TEST DIRECTOR

B. From 2-FCV-063-93 RHR to RCS CL 2; 2-47W432-211, 2-47W435-267, 2-47W435-267A and CL 3; 2-47W432-211, 2-47W435-267, 2-47W435-267B.

_____
WALK DOWN PERSONNEL

_____
TEST DIRECTOR

C. From 2-FCV-063-94 RHR to RCS CL 1; 2-47W432-211, 2-47W435-262 and CL 4; 2-47W432-211, 2-47W435-262.

_____
WALK DOWN PERSONNEL

_____
TEST DIRECTOR

D. From 2-FCV-063-172 RHR to RCS HL 1; 2-47W432-208A, 2-47W435-256 and HL 3; 2-47W432-208A, 2-47W435-253, 2-47W435-256.

_____
WALK DOWN PERSONNEL

_____
TEST DIRECTOR

Date _____

4.3 Field Preparations (continued)

E. From 2-FCV-063-156 SI PUMP 2A-A DISCHARGE LINE to RCS HL 1; 2-47W435-214, 2-47W435-214A, 2-47W435-256, 2-47W435-283 and HL 3; 2-47W435-214A, 2-47W435-253, 2-47W435-283, 2-47W435-285.

_____
WALK DOWN PERSONNEL

_____
TEST DIRECTOR

F. From 2-FCV-063-157 SI PUMP 2B-B DISCHARGE LINE to RCS HL 2; 2-47W435-215, 2-47W435-255, 2-47W435-284, 2-47W435-284A and HL 4; 2-47W435-215, 2-47W432-216, 2-47W435-284, 2-47W435-284A.

_____
WALK DOWN PERSONNEL

_____
TEST DIRECTOR

G. From 2-FCV-063-22 SI PUMPS DISCHARGE LINE to RCS CL1; 2-47W435-214, 2-47W435-214A, 2-47W435-262, 2-47W435-263, 2-47W435-272, CL2; 2-47W435-214, 2-47W435-214A, 2-47W435-267A, 2-47W435-272, 2-47W435-280, CL3; 2-47W435-214, 2-47W435-214A, 2-47W435-267B, 2-47W435-272, 2-47W435-280, CL4; 2-47W435-214A, 2-47W435-262, 2-47W435-263, 2-47W435-272.

_____
WALK DOWN PERSONNEL

_____
TEST DIRECTOR

Date _____

4.3 Field Preparations (continued)

H. From 2-FCV-063-25 and 2-FCV-063-26 SIS BORON INJ TANK SHUTOFF VLV; to RCS CL1; 2-47W406-359, 2-47W435-264, 2-47W435-264A, 2-47W435-265, 2-47W435-265A, CL2; 2-47W406-359, 2-47W435-218, 2-47W435-264, 2-47W435-265, 2-47W435-265A, CL3; 2-47W406-359, 2-47W435-218, 2-47W435-264, 2-47W435-264, 2-47W435-264A, CL4; 2-47W406-359, 2-47W435-264, 2-47W435-264A 2-47W435-265, 2-47W435-265A.

_____
WALK DOWN PERSONNEL

_____
TEST DIRECTOR

[13.7] Reactor Coolant System including:

A. Pressurizer Surge line from the Pressurizer to RCS HL2; 2-47W465-221.

_____
WALK DOWN PERSONNEL

_____
TEST DIRECTOR

B. Pressurizer Spray lines from Pressurizer to RCS CL1; 2-47W465-206 and CL2; 2-47W465-206.

_____
WALK DOWN PERSONNEL

_____
TEST DIRECTOR

Date _____

4.3 Field Preparations (continued)

C. Pressurizer Relief lines, 2-RFV-068-563 to PRT and drain line back to Pressurizer; 2-47W465-211, 2-47W465-212, 2-47W465-246, 2-RFV-068-564 to PRT and drain line back to Pressurizer; 2-47W465-211, 2-47W465-212, 2-47W465-246, 2-RFV-068-565 to PRT and drain line back to Pressurizer; 2-47W465-211, 2-47W465-212, 2-47W465-246, and Pressurizer nozzle through PORV's 2-PCV-068-334 and 2-PCV-068-340A to PRT ; 2-47W465-211, 2-47W465-212.

_____
WALK DOWN PERSONNEL

_____
TEST DIRECTOR

D. 2" RCS Drain Line from #1 RCL Crossover Leg to Box Anchor; 2-47W465-210.

_____
WALK DOWN PERSONNEL

_____
TEST DIRECTOR

E. RC Loop 2 Crossover Leg Drain Line to Box Anchor; 2-47W465-218.

_____
WALK DOWN PERSONNEL

_____
TEST DIRECTOR

F. RC Loop 4 Crossover Leg Drain Line to Anchor; 2-47W465-224.

_____
WALK DOWN PERSONNEL

_____
TEST DIRECTOR

G. Vessel Head Vent line from the Reactor Vessel Head to the 12" Pressurizer Relief line; 2-47W465-236.

_____
WALK DOWN PERSONNEL

_____
TEST DIRECTOR

Date _____

4.3 Field Preparations (continued)

H. Flange Monitoring lines from the Reactor Vessel Flange to valve 2-FCV-068-022.

_____
WALK DOWN PERSONNEL

_____
TEST DIRECTOR

[13.8] Main Feedwater to the Steam Generators via the 6" Bypass and the Auxiliary Feedwater Lines.

A. Steam Generator 1 to Class Change via 6” Bypass and the Auxiliary Feedwater Lines; 2-47W401-212, 2-47W427-209.

_____
WALK DOWN PERSONNEL

_____
TEST DIRECTOR

B. Steam Generator 2 to Class Change via 6” Bypass and the Auxiliary Feedwater Lines; 2-47W427-219, 2-47W427-219A.

_____
WALK DOWN PERSONNEL

_____
TEST DIRECTOR

C. Steam Generator 3 to Class Change via 6” Bypass and the Auxiliary Feedwater Lines; 2-47W427-224, 2-47W427-227, 2-47W427-233, 2-47W427-234.

_____
WALK DOWN PERSONNEL

_____
TEST DIRECTOR

D. Steam Generator 4 to Class Change via 6” Bypass and the Auxiliary Feedwater Lines; 2-47W427-216A, 2-47W427-216, 2-47W427-217.

_____
WALK DOWN PERSONNEL

_____
TEST DIRECTOR

Date _____

4.3 Field Preparations (continued)

[13.9] The 16" Main Feedwater lines from the Steam Generators to the Flued Head at the Valve Vault Wall and the Steam Generator Nozzle Warming Line.

A. Steam Generator 1 to Valve Vault Anchor via 16" Line and the Steam Generator Nozzle Warming Line; 2-47W401-159, 2-47W401-223.

_____
WALK DOWN PERSONNEL

_____
TEST DIRECTOR

B. Steam Generator 2 to Valve Vault Anchor via 16" Line and the Steam Generator Nozzle Warming Line; 2-47W401-224, 2-47W401-228.

_____
WALK DOWN PERSONNEL

_____
TEST DIRECTOR

C. Steam Generator 3 to Valve Vault Anchor via 16" Line and the Steam Generator Nozzle Warming Line; 2-47W401-225, 2-47W401-227.

_____
WALK DOWN PERSONNEL

_____
TEST DIRECTOR

D. Steam Generator 4 to Valve Vault Anchor via 16" Line and the Steam Generator Nozzle Warming Line; 2-47W401-226, 2-47W401-230.

_____
WALK DOWN PERSONNEL

_____
TEST DIRECTOR

Date _____

4.4 Approvals and Notifications

[1] **OBTAIN** permission of the Preoperational Startup Manager to start the test.

_____ _____
Preoperational Startup Manager Signature — Date

[2] **OBTAIN** the Unit 2 Supervisor's (US/SRO) or Shift Manager's (SM) authorization.

_____ _____
US/SRO/SM Signature — Date

Date _____

5.0 ACCEPTANCE CRITERIA

NOTES

1) Acceptance Criteria for NUCLEAR STEAM SUPPLY SYSTEM Loop Maximum Predicted Thermal Movements are defined in Attachment 2, Pipe Whip Restraint Maximum Predicted Thermal Movements are defined in Attachment 10 and the RCS Component Support Maximum Predicted Thermal Movements are defined in Attachment 11.
2) All deviations will be sent to Bechtel Engineering for evaluation using the Problem Report form, Appendix E, Page 2 of 2 of this procedure or on a SMP-14 Appendix B, Test Deficiency Notice.

[1] All measurements shall meet the Acceptance Criteria at all plateaus of Ambient Temperature (<105°F), 250° (245°-255°), 350° (345°-355°), 450° (445°-455°) and 557° (553°-560°) and Return to Ambient.

[2] The measured thermal movements shall be within ± 1/4 inch or 10 percent of the analytical value, whichever is greater. This is only to be used for data collected under Attachment 2. (Steps 6.1[9], 6.2[8], 6.3[8], 6.4[3], 6.5[5], 6.6[3.3], 6.6[4.3], 6.6[5.3], 6.6[6.3], 6.7[2.4], 6.8[2.5], 6.9[2.7], 6.10[1], 6.11[3.3], 6.12[8]

[3] Piping and components are free to expand and contract without restriction, other than by design, during heat up and cool down of the Reactor Coolant and associated systems. (Steps 6.1[9], 6.2[8], 6.3[8], 6.4[3], 6.5[4], 6.5[5], 6.6[3.3], 6.6[4.3], 6.6[5.3], 6.6[6.3], 6.7[2.4], 6.8[2.5], 6.9[2.7], 6.9[3.5], 6.10[1], 6.11[3.3], 6.12[8]

[4] Spring hanger movements remain within the hot and cold working range, and Dynamic Snubbers have **NOT** become fully retracted or extended. (Steps 6.1[9], 6.2[8], 6.3[8], 6.4[3], 6.5[4], 6.5[5], 6.6[3.3], 6.6[4.3], 6.6[5.3], 6.6[6.3], 6.7[2.4], 6.8[2.5], 6.9[2.7], 6.9[3.5], 6.10[1], 6.11[3.3], 6.12[8]

[5] Pipe Rupture Protective Devices do **NOT** interfere with the free thermal movement of the piping. (Steps 6.1[9], 6.2[8], 6.3[8], 6.4[3], 6.5[5], 6.8[2.5], 6.9[2.7], 6.10[1], 6.12[8]

[6] Reactor Coolant System, Loop Supports and equipment supports, do **NOT** interfere with the free thermal movement of the equipment and piping. (Steps 6.1[9], 6.2[8], 6.3[8], 6.4[3], 6.5[5], 6.10[1], 6.12[8]

Date _____

6.0 INSTRUCTIONS

NOTES

1) Variable Springs, Constant Springs and Dynamic Snubbers required for Thermal Expansion Testing are identified in Attachment 1. Data is recorded in Attachments 18, 19, 20, 21 22, 23, 24, 25, 26 and 27 and the Acceptance Criteria will be confirmed at their respective temperature plateaus, per the Instruction Sections 6.1 thru 6.12 and prior to going to the next plateau.
2) Pipe Rupture Restraints are identified in Attachment 10. Data is recorded on the individual sheets in Attachment 10, and the Acceptance Criteria will be confirmed at their respective temperature plateaus, per the Instruction Sections 6.1 thru 6.12 and prior to going to the next plateau.
3) Thermal Growth locations and Acceptance Criteria are provided in Attachment 2 and data is recorded in Attachments 3, 4, 5, 6, 7 and 8 and printouts are stored in Attachment 9. The Acceptance Criteria will be confirmed at their respective actual temperatures recorded at each plateau, per the Instruction Sections 6.1 thru 6.12 and prior to going to the next plateau.
4) Reactor Coolant System Component Supports and Acceptance Criteria are identified in Attachment 11 and data is recorded in Attachments 12, 13, 14, 15, 16 and 17. The Acceptance Criteria will be confirmed at their respective temperature plateaus, per the Instruction Sections 6.1 thru 6.12 and prior to going to the next plateau.
5) Test steps for data readings and surveillance walk downs may be performed concurrently throughout this instruction at their respective temperature plateaus.
6) Systems which will not see greater than 200°F and which have Variable Springs, Constant Springs and Dynamic Snubbers will **NOT** require data readings to be collected.
7) Displacements shown for example S_X, are in local coordinates. X, Y, and Z means Global (pipe is in Global Directions).

Date _____

6.0 INSTRUCTIONS (continued)

The diagram below depicts how the test is performed.

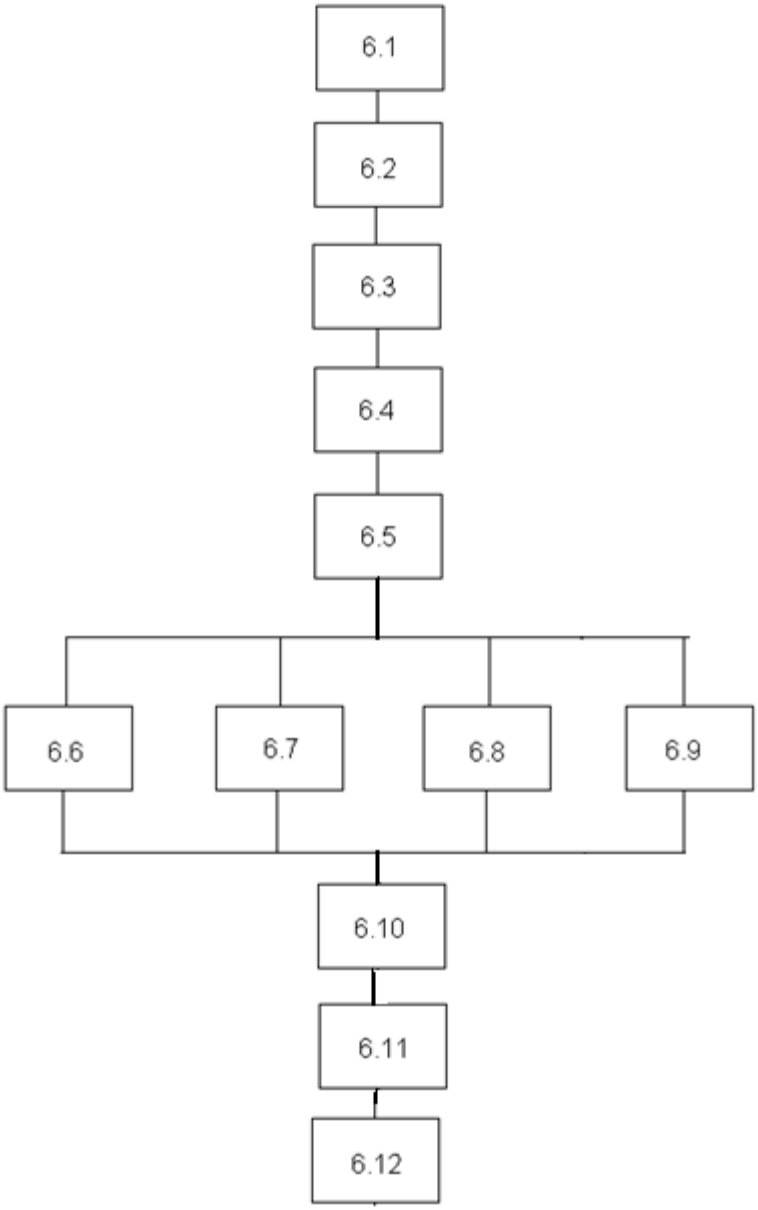

Date _____

6.1 Ambient Conditions of Reactor Coolant and Associated Systems

[1] **VERIFY** prerequisites listed in Section 4.0 for Subsection 6.1 have been completed.

_____
TEST DIRECTOR

[2] **ENSURE** the required Field Preparation Steps 4.3[1], 4.3[2], 4.3[3], 4.3[4] 4.3[7], 4.3[8] and 4.3[9], have been completed before starting the Ambient Plateau examinations.

_____
TEST DIRECTOR

NOTES

1) Problems or suspected problems shall be reported, evaluated and closed out on Problem Report form, Appendix E, Page 2 of 2, of this Attachment and attached to Attachment 31.
2) The Problem Report Log will be completed and attached to Attachment 30.
3) Problem Report form, Appendix E, Page 2 of 2 may be copied and completed as needed.
4) If the problem can not be resolved on a Problem Report then the Test Director will complete a Test Deficiency form for Major Test Deficiencies or non-conformances in accordance with approved procedures, i.e.; SMP-14.0, Appendix B, and attach to Attachment 33.
5) The Test Deficiency log will be completed and attached to Attachment 32.
6) All items identified will be entered in the Chronological Test Log and placed with Attachment 29.

[3] **WHEN** all systems under test, are at ambient temperature (less than 105°F), **THEN**

PERFORM the following prior to the start of plant heat up:

[3.1] **RECORD** the ambient data from the Data Acquisition System (DAS) for Reactor Coolant and Associated Systems on Attachment 3, **AND**

ATTACH computer data sheets to Attachment 9.

_____
TEST DIRECTOR

Date _____

6.1 Ambient Conditions of Reactor Coolant and Associated Systems (continued)

[3.2] **RECORD** settings for Dynamic Snubbers and Variable Springs and Constant Springs for Reactor Coolant and Associated Systems and Main Steam System and **PERFORM** any evaluations of problems found, in Attachment 18, Pages 1 thru 32 of 37, for this temperature plateau, prior to going to the next plateau.

_____
TEST DIRECTOR

_____
BECHTEL
ENGINEERING

NOTE
The Steam Generators may be verified in any order.

[3.3] **RECORD** Dynamic Snubbers and Spring Hanger settings for the Steam Generator Blowdown System and **PERFORM** any evaluations of problems found, in Attachment 25, for this temperature plateau, prior to going to the next plateau.

A. Steam Generator No. 1, Page 1 of 6 ☐

B. Steam Generator No. 2, Page 2 of 6 ☐

C. Steam Generator No. 3, Pages 3 and 4 of 6 ☐

D. Steam Generator No. 4, Pages 5 and 6 of 6 ☐

_____
TEST DIRECTOR

_____
BECHTEL
ENGINEERING

[3.4] **RECORD** initial cold settings and **PERFORM,** any evaluations of problems found for all Pipe Rupture Protective Devices on Reactor Coolant and Associated Systems, on Attachment 10 for this temperature plateau, prior to going to the next plateau.

_____
TEST DIRECTOR

_____
BECHTEL
ENGINEERING

Date _____

6.1 Ambient Conditions of Reactor Coolant and Associated Systems (continued)

[3.5] **RECORD** baseline gaps and **PERFORM** any evaluations of problems found for RCS Component Supports, on Attachment 12, for this temperature plateau, prior to going to the next plateau.

_____
BECHTEL
MECHANICAL
CONSTRUCTION

_____
BECHTEL
ENGINEERING

[3.6] **PERFORM** a surveillance walk down of all monitored systems, per guidelines of Appendix D and **PERFORM** any evaluations of problems found, for this temperature plateau, prior to going to the next plateau.

_____
TEST DIRECTOR

_____
BECHTEL
ENGINEERING

[3.7] **PERFORM** a surveillance walk down on the Steam Generator Blowdown System per guidelines of Appendix D and **PERFORM** any evaluations of problems found, for this temperature plateau prior to going to the next plateau.

A. Steam Generator No. 1 ☐

B. Steam Generator No. 2 ☐

C. Steam Generator No. 3 ☐

D. Steam Generator No. 4 ☐

_____
TEST DIRECTOR

_____
BECHTEL
ENGINEERING

Date _____

6.1 Ambient Conditions of Reactor Coolant and Associated Systems (continued)

[4] **PERFORM** the following on piping from Loop #4 Hot Leg to RHR Pumps A and B Suction common portion:

[4.1] **RECORD** Dynamic Snubbers and Spring Hanger settings from Loop #4 Hot Leg to RHR Pumps A and B Suction common portion and **PERFORM** any evaluations of problems found, in Attachment 18, Pages 33 and 34 of 37, for this temperature plateau prior to going to the next plateau.

_____
TEST DIRECTOR

_____
BECHTEL
ENGINEERING

[4.2] **PERFORM** a surveillance walk down of the piping from Loop #4 Hot Leg to RHR Pumps A and B Suction common portion, per guidelines of Appendix D and **PERFORM** any evaluations of problems found, for this temperature plateau, prior to going to the next plateau.

_____
TEST DIRECTOR

_____
BECHTEL
ENGINEERING

Date _____

6.1 Ambient Conditions of Reactor Coolant and Associated Systems (continued)

[5] **PERFORM** the following on piping from Loop #4 Hot Leg to RHR Pump A Suction:

[5.1] **RECORD** Dynamic Snubbers and Spring Hanger settings from Loop #4 Hot Leg to RHR Pump A Suction and **PERFORM** any evaluations of problems found, in Attachment 18, Page 34 of 37, for this temperature plateau prior to going to the next plateau.

_____
TEST DIRECTOR

_____
BECHTEL
ENGINEERING

[5.2] **PERFORM** a surveillance walk down of the piping from Loop #4 Hot Leg to RHR Pump A Suction, per guidelines of Appendix D and **PERFORM** any evaluations of problems found, for this temperature plateau, prior to going to the next plateau.

_____
TEST DIRECTOR

_____
BECHTEL
ENGINEERING

Date _____

6.1 Ambient Conditions of Reactor Coolant and Associated Systems (continued)

[6] **PERFORM** the following on piping from Loop #4 Hot Leg to RHR Pump B Suction:

[6.1] **RECORD** Dynamic Snubbers and Spring Hanger settings from Loop #4 Hot Leg to RHR Pump B Suction and **PERFORM** any evaluations of problems found, in Attachment 18, Page 35 of 37, for this temperature plateau prior to going to the next plateau.

_____
TEST DIRECTOR

_____
BECHTEL
ENGINEERING

[6.2] **PERFORM** a surveillance walk down of the piping from Loop #4 Hot Leg to RHR Pump B Suction, per guidelines of Appendix D and **PERFORM** any evaluations of problems found, for this temperature plateau, prior to going to the next plateau.

_____
TEST DIRECTOR

_____
BECHTEL
ENGINEERING

Date _____

6.1 Ambient Conditions of Reactor Coolant and Associated Systems (continued)

[7] **PERFORM** the following on RHR Train "A" from discharge of RHR Pump A-A thru the RHR Heat Exchanger A and RHR Heat Exchanger A Bypass Line to Cold Leg Injection:

[7.1] **RECORD** Dynamic Snubbers and Spring Hanger settings for RHR Train "A" from discharge of RHR Pump A-A thru the RHR Heat Exchanger A and RHR Heat Exchanger A Bypass Line to Cold Leg Injection and **PERFORM** any evaluations of problems found, in Attachment 18, Page 36 of 37, for this temperature plateau prior to going to the next plateau.

_____
TEST DIRECTOR

_____
BECHTEL
ENGINEERING

[7.2] **PERFORM** a surveillance walk down of the RHR Train "A" from discharge of RHR Pump A-A thru the RHR Heat Exchanger A and RHR Heat Exchanger A Bypass Line to Cold Leg Injection system per guidelines of Appendix D and **PERFORM** any evaluations of problems found, for this temperature plateau prior to going to the next plateau.

_____
TEST DIRECTOR

_____
BECHTEL
ENGINEERING

Date _____

6.1 Ambient Conditions of Reactor Coolant and Associated Systems (continued)

[8] **PERFORM** the following on RHR Train "B" from discharge of RHR Pump B-B thru the RHR Heat Exchanger B and RHR Heat Exchanger B Bypass Line to Cold Leg Injection:

[8.1] **RECORD** Dynamic Snubbers and Spring Hanger settings for RHR Train "B" from discharge of RHR Pump B-B thru the RHR Heat Exchanger B and RHR Heat Exchanger B Bypass Line to Cold Leg Injection and **PERFORM** any evaluations of problems found, in Attachment 18, Page 37 of 37, for this temperature plateau prior to going to the next plateau.

_____
TEST DIRECTOR

_____
BECHTEL
ENGINEERING

[8.2] **PERFORM** a surveillance walk down of the RHR Train "B" from discharge of RHR Pump B-B thru the RHR Heat Exchanger B and RHR Heat Exchanger B Bypass Line to Cold Leg Injection system, per guidelines of Appendix D and **PERFORM** any evaluations of problems found, for this temperature plateau prior to going to the next plateau.

_____
TEST DIRECTOR

_____
BECHTEL
ENGINEERING

Date _____

6.1 Ambient Conditions of Reactor Coolant and Associated Systems (continued)

NOTE

The Temperature and steady state conditions should be held steady until the Test Director and Bechtel Engineering have ENSURED all piping movements and support readings have been accepted or evaluated before going to the next plateau.

[9] **VERIFY** all piping movements and component settings at the Ambient plateau are in accordance with the Acceptance Criteria, Attachment 18, Pages 1 thru 37, **AND** that **NO** piping is being restrained from thermal growth other than by design, or movements have been reconciled by BECHTEL ENGINEERING, for this temperature plateau, prior to going to the next plateau. **(ACC CRIT 5.0[2], 5.0[3], 5.0[4], 5.0[5], 5.0[6])**

_____
TEST DIRECTOR

_____
BECHTEL
ENGINEERING

Date _____

6.2 Heat up of the Reactor Coolant System Temperature to 250°F (245°F - 255°F)

NOTE

The Temperature and steady state conditions should be held steady until the Test Director and Bechtel Engineering have ENSURED all piping movements and support readings have been accepted or evaluated before going to the next plateau.

[1] **VERIFY** prerequisites listed in Section 4.0 for Subsection 6.2 have been completed.

_____
TEST DIRECTOR

NOTES

1) Problems or suspected problems shall be reported, evaluated and closed out on Problem Report form, Appendix E, Page 2 of 2, of this Attachment and attached to Attachment 31.
2) The Problem Report Log will be completed and attached to Attachment 30.
3) Problem Report form, Appendix E, Page 2 of 2 may be copied and completed as needed.
4) If the problem can not be resolved on a Problem Report then the Test Director will complete a Test Deficiency form for Major Test Deficiencies or non-conformances in accordance with approved procedures, i.e.; SMP-14.0, Appendix B, and attach to Attachment 33.
5) The Test Deficiency log will be completed and attached to Attachment 32.
6) All items identified will be entered in the Chronological Test Log and placed with Attachment 29.
7) Steps 6.2[2.1] thru 6.2[2.7] may be performed in any order and Steps 6.2[3] thru 6.2[7] may be performed concurrently with Step 6.2[2] in any order, provided the system is aligned to perform those activities.

[2] **WHEN** the Main Steam System is in operation, with all 4 Main Steam Isolation Valves (MSIVs) OPEN **AND** the Reactor Coolant temperature has been increased to 250°F (245°F - 255°F), using 2-PTI-068-01 **AND** a MINIMUM of one hour soak time for the system has been allowed **THEN**

PERFORM the following:

Date _____

6.2 Heat up of the Reactor Coolant System Temperature to 250°F (245°F - 255°F) (continued)

[2.1] **RECORD** temperature/movement data from the Data Acquisition System (DAS) for Reactor Coolant and Associated Systems on Attachment 4, **AND**

ATTACH computer data sheets to Attachment 9.

_____
TEST DIRECTOR

[2.2] **RECORD** settings for Dynamic Snubbers and Variable Springs and Constant Springs for Reactor Coolant and Associated Systems and Main Steam System and **PERFORM** any evaluations of problems found, in Attachment 19, Pages 1 thru 32 of 37 for this temperature plateau, prior to going to the next plateau.

_____
TEST DIRECTOR

_____
BECHTEL
ENGINEERING

NOTE

The Steam Generators may be verified in any order.

[2.3] **RECORD** Dynamic Snubbers and Spring Hanger settings for the Steam Generator Blowdown System and **PERFORM** any evaluations of problems found, in Attachment 25, for this temperature plateau, prior to going to the next plateau.

A. Steam Generator No. 1, Page 1 of 6 ☐

B. Steam Generator No. 2, Page 2 of 6 ☐

C. Steam Generator No. 3, Pages 3 and 4 of 6 ☐

D. Steam Generator No. 4, Pages 5 and 6 of 6 ☐

_____
TEST DIRECTOR

_____
BECHTEL
ENGINEERING

Date _____

6.2 Heat up of the Reactor Coolant System Temperature to 250°F (245°F - 255°F) (continued)

[2.4] **RECORD** settings for all Pipe Rupture Protective Devices on Reactor Coolant and Associated Systems and Main Steam System and **PERFORM** any evaluations of problems found, on Attachment 10 for this temperature plateau, prior to going to the next plateau.

_____
TEST DIRECTOR

_____
BECHTEL
ENGINEERING

[2.5] **RECORD** hot gaps and **PERFORM** any evaluations of problems found for RCS Component Supports, on Attachment 13, for this temperature plateau, prior to going to the next plateau.

_____
BECHTEL
MECHANICAL
CONSTRUCTION

_____
BECHTEL
ENGINEERING

[2.6] **PERFORM** a surveillance walk down for Reactor Coolant and Associated Systems and Main Steam System, per guidelines of Appendix D and **PERFORM** any evaluations of problems found, for this temperature plateau, prior to going to the next plateau.

_____
TEST DIRECTOR

_____
BECHTEL
ENGINEERING

Date _____

6.2 Heat up of the Reactor Coolant System Temperature to 250°F (245°F - 255°F) (continued)

[2.7] **PERFORM** a surveillance walk down on the Steam Generator Blowdown System per guidelines of Appendix D and **PERFORM** any evaluations of problems found, for this temperature plateau prior to going to the next plateau.

A. Steam Generator No. 1 ☐

B. Steam Generator No. 2 ☐

C. Steam Generator No. 3 ☐

D. Steam Generator No. 4 ☐

_____
TEST DIRECTOR

_____
BECHTEL
ENGINEERING

[3] **WHEN** the temperature of the system has stabilized a MINIMUM of one hour, **THEN**

PERFORM the following on piping from Loop #4 Hot Leg to RHR Pumps A and B Suction common portion:

[3.1] **RECORD** Dynamic Snubbers and Spring Hanger settings from Loop #4 Hot Leg to RHR Pumps A and B Suction common portion and **PERFORM** any evaluations of problems found, in Attachment 19, Page 33 and 34 of 37, for this temperature plateau prior to going to the next plateau.

_____
TEST DIRECTOR

_____
BECHTEL
ENGINEERING

Date _____

6.2 Heat up of the Reactor Coolant System Temperature to 250°F (245°F - 255°F) (continued)

[3.2] **PERFORM** a surveillance walk down of the piping from Loop #4 Hot Leg to RHR Pumps A and B Suction common portion, per guidelines of Appendix D and **PERFORM** any evaluations of problems found, for this temperature plateau, prior to going to the next plateau.

_____
TEST DIRECTOR

_____
BECHTEL
ENGINEERING

[4] **WHEN** the temperature of the system has stabilized a MINIMUM of one hour, **THEN**

PERFORM the following on piping from Loop #4 Hot Leg to RHR Pump A Suction:

[4.1] **RECORD** Dynamic Snubbers and Spring Hanger settings from Loop #4 Hot Leg to RHR Pump A Suction and **PERFORM** any evaluations of problems found, in Attachment 19, Page 34 of 37, for this temperature plateau prior to going to the next plateau.

_____
TEST DIRECTOR

_____
BECHTEL
ENGINEERING

[4.2] **PERFORM** a surveillance walk down of the piping from Loop #4 Hot Leg to RHR Pump A Suction, per guidelines of Appendix D and **PERFORM** any evaluations of problems found, for this temperature plateau, prior to going to the next plateau.

_____
TEST DIRECTOR

_____
BECHTEL
ENGINEERING

Date _____

6.2 Heat up of the Reactor Coolant System Temperature to 250°F (245°F - 255°F) (continued)

[5] **WHEN** the temperature of the system has stabilized a MINIMUM of one hour, **THEN**

PERFORM the following on piping from Loop #4 Hot Leg to RHR Pump B Suction:

[5.1] **RECORD** Dynamic Snubbers and Spring Hanger settings from Loop #4 Hot Leg to RHR Pump B Suction and **PERFORM** any evaluations of problems found, in Attachment 19, Page 35 of 37, for this temperature plateau prior to going to the next plateau.

_____
TEST DIRECTOR

_____
BECHTEL
ENGINEERING

[5.2] **PERFORM** a surveillance walk down of the piping from Loop #4 Hot Leg to RHR Pump B Suction, per guidelines of Appendix D and **PERFORM** any evaluations of problems found, for this temperature plateau, prior to going to the next plateau.

_____
TEST DIRECTOR

_____
BECHTEL
ENGINEERING

[6] **AFTER** the temperature of the system has stabilized a MINIMUM of one hour, **THEN**

PERFORM the following on RHR Train "A" Cold Leg Injection:

[6.1] **RECORD** Dynamic Snubbers and Spring Hanger settings for RHR Train "A" from discharge of RHR Pump A-A thru the RHR Heat Exchanger A and RHR Heat Exchanger A Bypass Line to Cold Leg Injection and **PERFORM** any evaluations of problems found, in Attachment 19, Page 36 of 37, for this temperature plateau prior to going to the next plateau.

_____
TEST DIRECTOR

_____
BECHTEL
ENGINEERING

Date _____

6.2 Heat up of the Reactor Coolant System Temperature to 250°F (245°F - 255°F) (continued)

[6.2] **PERFORM** a surveillance walk down of the RHR Train "A" from discharge of RHR Pump A-A thru the RHR Heat Exchanger A and RHR Heat Exchanger A Bypass Line to Cold Leg Injection system per guidelines of Appendix D and **PERFORM** any evaluations of problems found, for this temperature plateau prior to going to the next plateau.

_____
TEST DIRECTOR

_____
BECHTEL
ENGINEERING

[7] **AFTER** the temperature of the system has stabilized a MINIMUM of one hour, **THEN**

PERFORM the following on RHR Train "B" Cold Leg Injection:

[7.1] **RECORD** Dynamic Snubbers and Spring Hanger settings for RHR Train "B" from discharge of RHR Pump B-B thru the RHR Heat Exchanger B and RHR Heat Exchanger B Bypass Line to Cold Leg Injection and **PERFORM** any evaluations of problems found, in Attachment 19, Page 37 of 37, for this temperature plateau prior to going to the next plateau.

_____
TEST DIRECTOR

_____
BECHTEL
ENGINEERING

[7.2] **PERFORM** a surveillance walk down of the RHR Train "B" from discharge of RHR Pump B-B thru the RHR Heat Exchanger B and RHR Heat Exchanger B Bypass Line to Cold Leg Injection system, per guidelines of Appendix D and **PERFORM** any evaluations of problems found, for this temperature plateau prior to going to the next plateau.

_____
TEST DIRECTOR

_____
BECHTEL
ENGINEERING

Date _____

6.2 Heat up of the Reactor Coolant System Temperature to 250°F (245°F - 255°F) (continued)

NOTE

The Temperature and steady state conditions should be held steady until the Test Director and Bechtel Engineering have ENSURED all piping movements and support readings have been accepted or evaluated before going to the next plateau.

[8] **VERIFY** all piping movements and component settings at the 250 °F plateau are in accordance with the Acceptance Criteria, Attachment 19, Pages 1 thru 37, **AND** that **NO** piping is being restrained from thermal growth other than by design, or movements have been reconciled by BECHTEL ENGINEERING, for this temperature plateau, prior to going to the next plateau. **(ACC CRIT 5.0[2], 5.0[3], 5.0[4], 5.0[5], 5.0[6])**

_____
TEST DIRECTOR

_____
BECHTEL
ENGINEERING

6.3 Heat up of the Reactor Coolant System Temperature to 350°F (345°F - 355°F)

NOTE

The Temperature and steady state conditions should be held steady until the Test Director and Bechtel Engineering have ENSURED all piping movements and support readings have been accepted or evaluated before going to the next plateau.

[1] **VERIFY** prerequisites listed in Section 4.0 for Subsection 6.3 have been completed.

_____
TEST DIRECTOR

Date _____

6.3 Heat up of the Reactor Coolant System Temperature to 350°F (345°F - 355°F) (continued)

NOTES

1) Problems or suspected problems shall be reported, evaluated and closed out on Problem Report form, Appendix E, Page 2 of 2, of this Attachment and attached to Attachment 31.
2) The Problem Report Log will be completed and attached to Attachment 30.
3) Problem Report form, Appendix E, Page 2 of 2 may be copied and completed as needed.
4) If the problem can not be resolved on a Problem Report then the Test Director will complete a Test Deficiency form for Major Test Deficiencies or non-conformances in accordance with approved procedures, i.e.; SMP-14.0, Appendix B, and attach to Attachment 33.
5) The Test Deficiency log will be completed and attached to Attachment 32.
6) All items identified will be entered in the Chronological Test Log and placed with Attachment 29.
7) Steps 6.3[2.1] thru 6.3[2.7] may be performed in any order and Steps 6.3[3] thru 6.3[7] may be performed concurrently with Step 6.3[2] in any order, provided the system is aligned to perform those activities.

[2] **WHEN** the Reactor Coolant temperature has been increased to 350°F (340°F - 349°F), but prior to isolation of the RHR System, using 2-PTI-068-01 **AND** a MINIMUM of one hour soak time for the system has been allowed **THEN**

PERFORM the following:

[2.1] **RECORD** temperature/movement data from the Data Acquisition System for Reactor Coolant and Associated Systems on Attachment 5, **AND**

ATTACH computer data sheets to Attachment 9.

_____
TEST DIRECTOR

Date _____

6.3 Heat up of the Reactor Coolant System Temperature to 350°F (345°F - 355°F) (continued)

[2.2] **RECORD** settings for Dynamic Snubbers and Variable Springs and Constant Springs for Reactor Coolant and Associated Systems and **PERFORM** any evaluations of problems found, in Attachment 20, Page 1 thru 33 of 37 for this temperature plateau prior to going to the next plateau.

_____
TEST DIRECTOR

_____
BECHTEL
ENGINEERING

NOTE
The Steam Generators may be verified in any order.

[2.3] **RECORD** Dynamic Snubbers and Spring Hanger settings for the Steam Generator Blowdown System and **PERFORM** any evaluations of problems found, in Attachment 25, for this temperature plateau, prior to going to the next plateau.

A. Steam Generator No. 1, Page 1 of 6 ☐

B. Steam Generator No. 2, Page 2 of 6 ☐

C. Steam Generator No. 3, Pages 3 and 4 of 6 ☐

D. Steam Generator No. 4, Pages 5 and 6 of 6 ☐

_____
TEST DIRECTOR

_____
BECHTEL
ENGINEERING

[2.4] **RECORD** settings for all Pipe Rupture Protective Devices on Reactor Coolant and Associated Systems and **PERFORM** any evaluations of problems found, on Attachment 10 for this temperature plateau prior to going to the next plateau.

_____
TEST DIRECTOR

_____
BECHTEL
ENGINEERING

Date _____

6.3 Heat up of the Reactor Coolant System Temperature to 350°F (345°F - 355°F) (continued)

[2.5] **RECORD** hot gaps and **PERFORM** any evaluations of problems found for RCS Component Supports, on Attachment 14, for this temperature plateau prior to going to the next plateau.

_____
BECHTEL
MECHANICAL
CONSTRUCTION

_____
BECHTEL
ENGINEERING

[2.6] **PERFORM** a surveillance walk down of all monitored systems, per guidelines of Appendix D and **PERFORM** any evaluations of problems found, for this temperature plateau prior to going to the next plateau.

_____
TEST DIRECTOR

_____
BECHTEL
ENGINEERING

[2.7] **PERFORM** a surveillance walk down on the Steam Generator Blowdown System per guidelines of Appendix D and **PERFORM** any evaluations of problems found, for this temperature plateau prior to going to the next plateau.

A. Steam Generator No. 1 ☐

B. Steam Generator No. 2 ☐

C. Steam Generator No. 3 ☐

D. Steam Generator No. 4 ☐

_____
TEST DIRECTOR

_____
BECHTEL
ENGINEERING

Date _____

6.3 Heat up of the Reactor Coolant System Temperature to 350°F (345°F - 355°F) (continued)

[3] **WHEN** the temperature of the system has stabilized a MINIMUM of one hour, **THEN**

PERFORM the following on piping from Loop #4 Hot Leg to RHR Pumps A and B Suction common portion:

[3.1] **RECORD** Dynamic Snubbers and Spring Hanger settings from Loop #4 Hot Leg to RHR Pumps A and B Suction common portion and **PERFORM** any evaluations of problems found, in Attachment 20, Page 34 and 35 of 37, for this temperature plateau prior to going to the next plateau.

_____
TEST DIRECTOR

_____
BECHTEL
ENGINEERING

[3.2] **PERFORM** a surveillance walk down of the piping from Loop #4 Hot Leg to RHR Pumps A and B Suction common portion, per guidelines of Appendix D and **PERFORM** any evaluations of problems found, for this temperature plateau, prior to going to the next plateau.

_____
TEST DIRECTOR

_____
BECHTEL
ENGINEERING

Date _____

6.3 Heat up of the Reactor Coolant System Temperature to 350°F (345°F - 355°F) (continued)

[4] **WHEN** the temperature of the system has stabilized a MINIMUM of one hour, **THEN**

PERFORM the following on piping from Loop #4 Hot Leg to RHR Pump A Suction:

[4.1] **RECORD** Dynamic Snubbers and Spring Hanger settings from Loop #4 Hot Leg to RHR Pump A Suction and **PERFORM** any evaluations of problems found, in Attachment 20, Page 35 of 37, for this temperature plateau prior to going to the next plateau.

_____
TEST DIRECTOR

_____
BECHTEL
ENGINEERING

[4.2] **PERFORM** a surveillance walk down of the piping from Loop #4 Hot Leg to RHR Pump A Suction, per guidelines of Appendix D and **PERFORM** any evaluations of problems found, for this temperature plateau, prior to going to the next plateau.

_____
TEST DIRECTOR

_____
BECHTEL
ENGINEERING

Date _____

6.3 Heat up of the Reactor Coolant System Temperature to 350°F (345°F - 355°F) (continued)

[5] **WHEN** the temperature of the system has stabilized a MINIMUM of one hour, **THEN**

PERFORM the following on piping from Loop #4 Hot Leg to RHR Pump B Suction:

[5.1] **RECORD** Dynamic Snubbers and Spring Hanger settings from Loop #4 Hot Leg to RHR Pump B Suction and **PERFORM** any evaluations of problems found, in Attachment 20, Page 35 of 37, for this temperature plateau prior to going to the next plateau.

_____
TEST DIRECTOR

_____
BECHTEL
ENGINEERING

[5.2] **PERFORM** a surveillance walk down of the piping from Loop #4 Hot Leg to RHR Pump B Suction, per guidelines of Appendix D and **PERFORM** any evaluations of problems found, for this temperature plateau, prior to going to the next plateau.

_____
TEST DIRECTOR

_____
BECHTEL
ENGINEERING

Date _____

6.3 Heat up of the Reactor Coolant System Temperature to 350°F (345°F - 355°F) (continued)

[6] **AFTER** the temperature of the system has stabilized a MINIMUM of one hour, **THEN**

PERFORM the following on RHR Train "A" Cold Leg Injection:

[6.1] **RECORD** Dynamic Snubbers and Spring Hanger settings for RHR Train "A" from discharge of RHR Pump A-A thru the RHR Heat Exchanger A and RHR Heat Exchanger A Bypass Line to Cold Leg Injection and **PERFORM** any evaluations of problems found, in Attachment 20, Page 36 of 37, for this temperature plateau prior to going to the next plateau.

_____
TEST DIRECTOR

_____
BECHTEL
ENGINEERING

[6.2] **PERFORM** a surveillance walk down of the RHR Train "A" from discharge of RHR Pump A-A thru the RHR Heat Exchanger A and RHR Heat Exchanger A Bypass Line to Cold Leg Injection system per guidelines of Appendix D and **PERFORM** any evaluations of problems found, for this temperature plateau prior to going to the next plateau.

_____
TEST DIRECTOR

_____
BECHTEL
ENGINEERING

[7] **AFTER** the temperature of the system has stabilized a MINIMUM of one hour, **THEN**

PERFORM the following on RHR Train "B" Cold Leg Injection:

Date _____

6.3 Heat up of the Reactor Coolant System Temperature to 350°F (345°F - 355°F) (continued)

[7.1] **RECORD** Dynamic Snubbers and Spring Hanger settings for RHR Train "B" from discharge of RHR Pump A-A thru the RHR Heat Exchanger A and RHR Heat Exchanger A Bypass Line to Cold Leg Injection and **PERFORM** any evaluations of problems found, in Attachment 20, Pages 37 of 37, for this temperature plateau prior to going to the next plateau.

_____
TEST DIRECTOR

_____
BECHTEL
ENGINEERING

[7.2] **PERFORM** a surveillance walk down of the RHR Train "B" from discharge of RHR Pump A-A thru the RHR Heat Exchanger A and RHR Heat Exchanger A Bypass Line to Cold Leg Injection system, per guidelines of Appendix D and **PERFORM** any evaluations of problems found, for this temperature plateau prior to going to the next plateau.

_____
TEST DIRECTOR

_____
BECHTEL
ENGINEERING

NOTE

The Temperature and steady state conditions should be held steady until the Test Director and Bechtel Engineering have ENSURED all piping movements and support readings have been accepted or evaluated before going to the next plateau.

[8] **VERIFY** all piping movements and component settings at the 350°F plateau are in accordance with the Acceptance Criteria, Attachment 20, Pages 1 thru 39, AND that **NO** piping is being restrained from thermal growth other than by design, or movements have been reconciled by BECHTEL ENGINEERING, for this temperature plateau prior to going to the next plateau. **(ACC CRIT 5.0[2], 5.0[3], 5.0[4], 5.0[5], 5.0[6])**

_____
TEST DIRECTOR

_____
BECHTEL
ENGINEERING

Date _____

6.4 Heat up of the Reactor Coolant System Temperature to 450°F (445°F - 455°F)

NOTE

The Temperature and steady state conditions should be held steady until the Test Director and Bechtel Engineering have ENSURED all piping movements and support readings have been accepted or evaluated before going to the next plateau.

[1] **VERIFY** prerequisites listed in Section 4.0 for Subsection 6.4 have been completed.

_____
TEST DIRECTOR

NOTES

1) Problems or suspected problems shall be reported, evaluated and closed out on Problem Report form, Appendix E, Page 2 of 2, of this Attachment and attached to Attachment 31.
2) The Problem Report Log will be completed and attached to Attachment 30.
3) Problem Report form, Appendix E, Page 2 of 2 may be copied and completed as needed.
4) If the problem can not be resolved on a Problem Report then the Test Director will complete a Test Deficiency form for Major Test Deficiencies or non-conformances in accordance with approved procedures, i.e.; SMP-14.0, Appendix B, and attach to Attachment 33.
5) The Test Deficiency log will be completed and attached to Attachment 32.
6) All items identified will be entered in the Chronological Test Log and placed with Attachment 29.
7) Steps 6.4[2.1] thru 6.4[2.7] may be performed in any order, provided the system is aligned to perform those activities.

[2] **WHEN** the Reactor Coolant temperature has been increased to 450°F (445°F - 455°F), using 2-PTI-068-01 **AND** a MINIMUM of one hour soak time for the system has been allowed **THEN**

PERFORM the following:

Date _____

6.4 Heat up of the Reactor Coolant System Temperature to 450°F (445°F - 455°F) (continued)

[2.1] **RECORD** temperature/movement data from the Data Acquisition System for Reactor Coolant and Associated Systems on Attachment 6, **AND**

ATTACH computer data sheets to Attachment 9.

_____
TEST DIRECTOR

[2.2] **RECORD** settings for Dynamic Snubbers and Variable Springs and Constant Springs for Reactor Coolant and Associated Systems and **PERFORM** any evaluations of problems found, in Attachment 21 Pages 1 thru 37, for this temperature plateau prior to going to the next plateau.

_____
TEST DIRECTOR

_____
BECHTEL
ENGINEERING

NOTE

The Steam Generators may be verified in any order.

[2.3] **RECORD** Dynamic Snubbers and Spring Hanger settings for the Steam Generator Blowdown System and **PERFORM** any evaluations of problems found, in Attachment 25, for this temperature plateau, prior to going to the next plateau.

A. Steam Generator No. 1, Page 1 of 6 ☐

B. Steam Generator No. 2, Page 2 of 6 ☐

C. Steam Generator No. 3, Pages 3 and 4 of 6 ☐

D. Steam Generator No. 4, Pages 5 and 6 of 6 ☐

_____
TEST DIRECTOR

_____
BECHTEL
ENGINEERING

Date _____

6.4 Heat up of the Reactor Coolant System Temperature to 450°F (445°F - 455°F) (continued)

[2.4] **RECORD** settings for all Pipe Rupture Protective Devices on Reactor Coolant and Associated Systems and **PERFORM** any evaluations of problems found, on Attachment 10, for this temperature plateau prior to going to the next plateau.

_____
TEST DIRECTOR

_____
BECHTEL
ENGINEERING

[2.5] **RECORD** hot gaps and **PERFORM** any evaluations of problems found for REACTOR COOLANT SYSTEM Component Supports, on Attachment 15, for this temperature plateau prior to going to the next plateau.

_____
BECHTEL
MECHANICAL
CONSTRUCTION

_____
BECHTEL
ENGINEERING

[2.6] **PERFORM** a surveillance walk down of the Reactor Coolant and Associated Systems per guidelines of Appendix D and **PERFORM** any evaluations of problems found, for this temperature plateau prior to going to the next plateau.

_____
TEST DIRECTOR

_____
BECHTEL
ENGINEERING

Date _____

6.4 Heat up of the Reactor Coolant System Temperature to 450°F (445°F - 455°F) (continued)

[2.7] **PERFORM** a surveillance walk down on the Steam Generator Blowdown System per guidelines of Appendix D and **PERFORM** any evaluations of problems found, for this temperature plateau prior to going to the next plateau.

A. Steam Generator No. 1 ☐

B. Steam Generator No. 2 ☐

C. Steam Generator No. 3 ☐

D. Steam Generator No. 4 ☐

_____
TEST DIRECTOR

_____
BECHTEL
ENGINEERING

NOTE

The Temperature and steady state conditions should be held steady until the Test Director and Bechtel Engineering have ENSURED all piping movements and support readings have been accepted or evaluated before going to the next plateau.

[3] **VERIFY** all piping movements and component settings at the 450 °F plateau are in accordance with the Acceptance Criteria, Attachment 21, Pages 1 thru 39, **AND** that **NO** piping is being restrained from thermal growth other than by design, or movements have been reconciled by BECHTEL ENGINEERING, for this temperature plateau, prior to going to the next plateau. **(ACC CRIT 5.0[2], 5.0[3], 5.0[4], 5.0[5], 5.0[6])**

_____
TEST DIRECTOR

_____
BECHTEL
ENGINEERING

Date _____

6.5 Heat up of the Reactor Coolant System Temperature to 557°F (553°F - 560°F)

NOTES

1) Problems or suspected problems shall be reported, evaluated and closed out on Problem Report form, Appendix E, Page 2 of 2, of this Attachment and attached to Attachment 31.
2) The Problem Report Log will be completed and attached to Attachment 30.
3) Problem Report form, Appendix E, Page 2 of 2 may be copied and completed as needed.
4) If the problem can not be resolved on a Problem Report then the Test Director will complete a Test Deficiency form for Major Test Deficiencies or non-conformances in accordance with approved procedures, i.e.; SMP-14.0, Appendix B, and attach to Attachment 33.
5) The Test Deficiency log will be completed and attached to Attachment 32.
6) All items identified will be entered in the Chronological Test Log and placed with Attachment 29.
7) Sections 6.6 thru 6.9 may be performed concurrently with Section 6.5, in any order provided the REACTOR COOLANT SYSTEM temperature can be maintained in the specified temperature band. The Test Engineer should be consulted prior to performing concurrent steps.

[1] **VERIFY** prerequisites listed in Section 4.0 for Subsection 6.5 have been completed.

_____
TEST DIRECTOR

[2] **WHEN** the Reactor Coolant temperature has been increased to 557°F (553°F - 560°F), using 2-PTI-068-01 **AND** a MINIMUM of one hour soak time for the system has been allowed **THEN**

PERFORM the following:

[2.1] **RECORD** temperature/movement data from the Data Acquisition System on Attachment 7, **AND**

ATTACH computer data sheets to Attachment 9.

_____
TEST DIRECTOR

Date _____

6.5 Heat up of the Reactor Coolant System Temperature to 557°F (553°F - 560°F) (continued)

[2.2] **RECORD** settings for Dynamic Snubbers and Variable Springs and Constant Springs for Reactor Coolant and Associated Systems, in Attachment 22, Pages 1 thru 13 and 16 thru 37 of 37, and **PERFORM** any evaluations of problems found for this temperature plateau prior to going to the next plateau.

_____
TEST DIRECTOR

_____
BECHTEL
ENGINEERING

NOTE
The Steam Generators may be verified in any order.

[2.3] **RECORD** Dynamic Snubbers and Spring Hanger settings for the Steam Generator Blowdown System and **PERFORM** any evaluations of problems found, in Attachment 25, for this temperature plateau, prior to going to the next plateau.

A. Steam Generator No. 1, Page 1 of 6 ☐

B. Steam Generator No. 2, Page 2 of 6 ☐

C. Steam Generator No. 3, Pages 3 and 4 of 6 ☐

D. Steam Generator No. 4, Pages 5 and 6 of 6 ☐

_____
TEST DIRECTOR

_____
BECHTEL
ENGINEERING

[2.4] **RECORD** settings for all Pipe Rupture Protective Devices on Reactor Coolant and Associated Systems and **PERFORM** any evaluations of problems found, on Attachment 10, for this temperature plateau prior to going to the next plateau.

_____
TEST DIRECTOR

_____
BECHTEL
ENGINEERING

Date _____

6.5 Heat up of the Reactor Coolant System Temperature to 557°F (553°F - 560°F) (continued)

[2.5] **RECORD** hot gaps and **PERFORM** any evaluations of problems found for REACTOR COOLANT SYSTEM Component Supports, on Attachment 16, for this temperature plateau prior to going to the next plateau.

_____
BECHTEL MECHANICAL CONSTRUCTION

_____
BECHTEL ENGINEERING

[2.6] **PERFORM** a surveillance walk down of the Reactor Coolant and Associated Systems per guidelines of Appendix D and **PERFORM** any evaluations of problems found, for this temperature plateau prior to going to the next plateau.

_____
TEST DIRECTOR

_____
BECHTEL ENGINEERING

[2.7] **PERFORM** a surveillance walk down on the Steam Generator Blowdown System per guidelines of Appendix D and **PERFORM** any evaluations of problems found, for this temperature plateau prior to going to the next plateau.

A. Steam Generator No. 1 ☐

B. Steam Generator No. 2 ☐

C. Steam Generator No. 3 ☐

D. Steam Generator No. 4 ☐

_____
TEST DIRECTOR

_____
BECHTEL ENGINEERING

Date _____

6.5 Heat up of the Reactor Coolant System Temperature to 557°F (553°F - 560°F) (continued)

[3] **WHEN** the Motor Driven Auxiliary Feedwater System, during the performance of 2-PTI-003B-05, at the 557°F (553°F - 560°F) plateau, **AND** a MINIMUM of one hour soak time for the system has been allowed, **THEN**

PERFORM the following:

[3.1] **RECORD** Dynamic Snubbers and Spring Hanger settings for the Motor Driven Auxiliary Feedwater Pumps, in Attachment 22, Page 14 and 15 of 37, and **PERFORM** any evaluations of problems found, for this temperature plateau prior to going to the next plateau.

_____
TEST DIRECTOR

_____
BECHTEL
ENGINEERING

[3.2] **PERFORM** a surveillance walk down on the Motor Driven Auxiliary Feedwater Supply Lines per guidelines of Appendix D and **PERFORM** any evaluations of problems found, for this temperature plateau prior to going to the next plateau.

_____
TEST DIRECTOR

_____
BECHTEL
ENGINEERING

[4] **VERIFY** all piping movements and component settings for the Motor Driven Auxiliary Feedwater Supply Lines at this plateau are in accordance with the Acceptance Criteria, Attachment 22 Pages 14 and 15 of 37, **AND** that **NO** piping is being restrained from thermal growth other than by design, or movements have been reconciled by BECHTEL ENGINEERING, for this temperature plateau, prior to going to the next plateau. **(ACC CRIT 5.0[3], 5.0[4])**

_____
TEST DIRECTOR

_____
BECHTEL
ENGINEERING

Date _____

6.5 Heat up of the Reactor Coolant System Temperature to 557°F (553°F - 560°F) (continued)

NOTE

The Temperature and steady state conditions should be held steady until the Test Director and Bechtel Engineering have ENSURED all piping movements and support readings have been accepted or evaluated before going to the next plateau.

[5] **VERIFY** all piping movements and component settings at the 557 °F (553°F - 560°F) plateau are in accordance with the Acceptance Criteria, Attachment 22, Pages 1 thru 13 and 16 thru 37, **AND** that **NO** piping is being restrained from thermal growth other than by design, or movements have been reconciled by BECHTEL ENGINEERING, for this temperature plateau, prior to going to the next plateau.
(ACC CRIT 5.0[2], 5.0[3], 5.0[4], 5.0[5], 5.0[6])

_____
TEST DIRECTOR

_____
BECHTEL
ENGINEERING

Date _____

6.6 Operation of the Chemical & Volume Control System

NOTE

The Temperature and steady state conditions should be held steady until the Test Director and Bechtel Engineering have ENSURED all piping movements and support readings have been accepted or evaluated before going to the next plateau.

[1] **VERIFY** prerequisites listed in Section 4.0 for Subsection 6.6 have been completed.

_____
TEST DIRECTOR

NOTES

1) Problems or suspected problems shall be reported, evaluated and closed out on Problem Report form, Appendix E, Page 2 of 2, of this Attachment and attached to Attachment 31.
2) The Problem Report Log will be completed and attached to Attachment 30.
3) Problem Report form, Appendix E, Page 2 of 2 may be copied and completed as needed.
4) If the problem can not be resolved on a Problem Report then the Test Director will complete a Test Deficiency form for Major Test Deficiencies or non-conformances in accordance with approved procedures, i.e.; SMP-14.0, Appendix B, and attach to Attachment 33.
5) The Test Deficiency log will be completed and attached to Attachment 32.
6) All items identified will be entered in the Chronological Test Log and placed with Attachment 29.

[2] **WHEN** the individual portions of the CVCS system are in operation, **THEN**

RECORD temperature/movement data from the Data Acquisition System **AND**

ATTACH computer data sheets to Attachment 9.

_____
TEST DIRECTOR

Date _____

6.6 Operation of the Chemical & Volume Control System (continued)

[3] **WHEN** the Chemical & Volume Control System is in operation using Normal Charging, using 2-TOP-062-02, Section 5.4 **AND** a MINIMUM of one hour soak time for the system has been allowed **THEN**

PERFORM the following:

[3.1] **RECORD** Dynamic Snubbers and Spring Hanger settings for the Normal Charging system, in Attachment 23, Page 1 of 6 and **PERFORM** any evaluations of problems found, for this temperature plateau prior to going to the next plateau.

_____
TEST DIRECTOR

_____
BECHTEL
ENGINEERING

[3.2] **PERFORM** a surveillance walk down on the normal charging flow path per guidelines of Appendix D and **PERFORM** any evaluations of problems found, for this temperature plateau prior to going to the next plateau.

_____
TEST DIRECTOR

_____
BECHTEL
ENGINEERING

[3.3] **VERIFY** all piping movements and component settings at this plateau for the Normal Charging system are in accordance with the Acceptance Criteria, Attachment 23, Page 1 of 6, **AND** that **NO** piping is being restrained from thermal growth other than by design, or movements have been reconciled by BECHTEL ENGINEERING, for this temperature plateau, prior to going to the next plateau. **(ACC CRIT 5.0[2], 5.0[3], 5.0[4])**

_____
TEST DIRECTOR

_____
BECHTEL
ENGINEERING

Date _____

6.6 Operation of the Chemical & Volume Control System (continued)

[4] **WHEN** the Chemical & Volume Control System is in operation using Alternate Charging, per 2-TOP-062-02, Section 5.4 **AND** a MINIMUM of one hour soak time for the system has been allowed, **THEN**

PERFORM the following:

[4.1] **RECORD** Dynamic Snubbers and Spring Hanger settings for the Alternate Charging System and **PERFORM** any evaluations of problems found, in Attachment 23, Page 2 of 6, for this temperature plateau prior to going to the next plateau.

_____
TEST DIRECTOR

_____
BECHTEL
ENGINEERING

[4.2] **PERFORM** a surveillance walk down on the Alternate Charging System per guidelines of Appendix D and **PERFORM** any evaluations of problems found, for this temperature plateau prior to going to the next plateau.

_____
TEST DIRECTOR

_____
BECHTEL
ENGINEERING

[4.3] **VERIFY** all piping movements and component settings at this plateau for the Alternate Charging system are in accordance with the Acceptance Criteria, Attachment 23, Page 2 of 6, **AND** that **NO** piping is being restrained from thermal growth other than by design, or movements have been reconciled by BECHTEL ENGINEERING, for this temperature plateau, prior to going to the next plateau. **(ACC CRIT 5.0[2], 5.0[3], 5.0[4])**

_____
TEST DIRECTOR

_____
BECHTEL
ENGINEERING

Date _____

6.6 Operation of the Chemical & Volume Control System (continued)

[5] **WHEN** the Chemical & Volume Control System is in operation using the Excess Letdown Heat Exchanger, per 2-TOP-062-02, Section 7.4 **AND** a MINIMUM of one hour soak time for the system has been allowed, **THEN**

PERFORM the following:

[5.1] **RECORD** Dynamic Snubbers and Spring Hanger settings for the CVCS Excess Letdown Flow Path and **PERFORM** any evaluations of problems found, in Attachment 23, Page 3 of 6, for this temperature plateau prior to going to the next plateau.

_____
TEST DIRECTOR

_____
BECHTEL
ENGINEERING

[5.2] **PERFORM** a surveillance walk down on the CVCS Excess Letdown flow path per guidelines of Appendix D and **PERFORM** any evaluations of problems found, for this temperature plateau prior to going to the next plateau.

_____
TEST DIRECTOR

_____
BECHTEL
ENGINEERING

[5.3] **VERIFY** all piping movements and component settings at this plateau for the Excess Letdown Heat Exchanger are in accordance with the Acceptance Criteria, Attachment 23, Page 3 of 6, **AND** that **NO** piping is being restrained from thermal growth other than by design, or movements have been reconciled by BECHTEL ENGINEERING, for this temperature plateau, prior to going to the next plateau. **(ACC CRIT 5.0[2], 5.0[3], 5.0[4])**

_____
TEST DIRECTOR

_____
BECHTEL
ENGINEERING

Date _____

6.6 Operation of the Chemical & Volume Control System (continued)

[6] **WHEN** the Chemical & Volume Control System is in operation using Normal Letdown, per 2-TOP-062-02, Section 5.4 **AND** a MINIMUM of one hour soak time for the system has been allowed, **THEN**

PERFORM the following:

[6.1] **RECORD** Dynamic Snubbers and Spring Hanger settings for the CVCS Normal Letdown Flow Path and **PERFORM** any evaluations of problems found, in Attachment 23, Page 4 and 5 of 6, for this temperature plateau prior to going to the next plateau.

_____
TEST DIRECTOR

_____
BECHTEL
ENGINEERING

[6.2] **PERFORM** a surveillance walk down on the CVCS Letdown Flow Path per guidelines of Appendix D and **PERFORM** any evaluations of problems found, for this temperature plateau prior to going to the next plateau.

_____
TEST DIRECTOR

_____
BECHTEL
ENGINEERING

[6.3] **VERIFY** all piping movements and component settings at this plateau for the Normal Letdown system are in accordance with the Acceptance Criteria, Attachment 23, Page 4 and 5 of 6, **AND** that **NO** piping is being restrained from thermal growth other than by design, or movements have been reconciled by BECHTEL ENGINEERING, for this temperature plateau, prior to going to the next plateau. **(ACC CRIT 5.0[2], 5.0[3], 5.0[4])**

_____
TEST DIRECTOR

_____
BECHTEL
ENGINEERING

Date _____

6.7 Operation of the Reactor Coolant System Pressurizer Spray

NOTE

The Temperature and steady state conditions should be held steady until the Test Director and Bechtel Engineering have ENSURED all piping movements and support readings have been accepted or evaluated before going to the next plateau.

[1] **VERIFY** prerequisites listed in Section 4.0 for Subsection 6.7 have been completed.

_____
TEST DIRECTOR

NOTES

1) Problems or suspected problems shall be reported, evaluated and closed out on Problem Report form, Appendix E, Page 2 of 2, of this Attachment and attached to Attachment 31.
2) The Problem Report Log will be completed and attached to Attachment 30.
3) Problem Report form, Appendix E, Page 2 of 2 may be copied and completed as needed.
4) If the problem can not be resolved on a Problem Report then the Test Director will complete a Test Deficiency form for Major Test Deficiencies or non-conformances in accordance with approved procedures, i.e.; SMP-14.0, Appendix B, and attach to Attachment 33.
5) The Test Deficiency log will be completed and attached to Attachment 32.
6) All items identified will be entered in the Chronological Test Log and placed with Attachment 29.

[2] **WHEN** the individual portions of the Reactor Coolant System Pressurizer Spray is in operation, using 2-PTI-068-01 **AND** a MINIMUM of one hour soak time for the system has been allowed, **THEN**

PERFORM the following:

[2.1] **RECORD** temperature/movement data from the Data Acquisition System, **AND**

ATTACH computer data sheets to Attachment 9.

_____
TEST DIRECTOR

Date _____

6.7 Operation of the Reactor Coolant System Pressurizer Spray (continued)

[2.2] **RECORD** Dynamic Snubbers and Spring Hanger settings for the Pressurizer Spray Flow Path and **PERFORM** any evaluations of problems found, in Attachment 24, for this temperature plateau prior to going to the next plateau.

_____
TEST DIRECTOR

_____
BECHTEL ENGINEERING

[2.3] **PERFORM** a surveillance walk down on the Pressurizer Spray Flow Path per guidelines of Appendix D and **PERFORM** any evaluations of problems found, for this temperature plateau prior to going to the next plateau.

_____
TEST DIRECTOR

_____
BECHTEL ENGINEERING

[2.4] **VERIFY** all piping movements and component settings at this plateau for the Pressurizer Spray system are in accordance with the Acceptance Criteria, **AND** that **NO** piping is being restrained from thermal growth other than by design, or movements have been reconciled by BECHTEL ENGINEERING, for this temperature plateau, prior to going to the next plateau. **(ACC CRIT 5.0[2], 5.0[3], 5.0[4])**

_____
TEST DIRECTOR

_____
BECHTEL ENGINEERING

Date _____

6.8 Operation of the Turbine Driven Auxiliary Feedwater Pump (TDAFP)

NOTES

1) This section should be performed concurrently with the 48-hour endurance run of the Turbine Driven Auxiliary Feedwater Pump.
2) The Temperature and steady state conditions should be held steady until the Test Director and Bechtel Engineering have ENSURED all piping movements and support readings have been accepted or evaluated before going to the next plateau.
3) Problems or suspected problems shall be reported, evaluated and closed out on Problem Report form, Appendix E, Page 2 of 2, of this Attachment and attached to Attachment 31.
4) The Problem Report Log will be completed and attached to Attachment 30.
5) Problem Report form, Appendix E, Page 2 of 2 may be copied and completed as needed.
6) If the problem can not be resolved on a Problem Report then the Test Director will complete a Test Deficiency form for Major Test Deficiencies or non-conformances in accordance with approved procedures, i.e.; SMP-14.0, Appendix B, and attach to Attachment 33.
7) The Test Deficiency log will be completed and attached to Attachment 32.
8) All items identified will be entered in the Chronological Test Log and placed with Attachment 29.

[1] **VERIFY** prerequisites listed in Section 4.0 for Subsection 6.8 have been completed.

_____
TEST DIRECTOR

[2] **WHEN** the Turbine Driven Auxiliary Feedwater Pump (TDAFP) steam supply piping is in operation **AND** a MINIMUM of one hour soak time for the system has been allowed, **THEN**

PERFORM the following:

[2.1] **RECORD** temperature data at point, RTD-22 and movement data at points FW-14 thru FW-17 from the Data Acquisition System, **AND**

ATTACH computer data sheets to Attachment 9.

_____
TEST DIRECTOR

Date _____

6.8 Operation of the Turbine Driven Auxiliary Feedwater Pump (TDAFP) (continued)

[2.2] **RECORD** Dynamic Snubbers and Spring Hanger settings for the TDAFP steam supply and **PERFORM** any evaluations of problems found, in Attachment 26, Pages 1 thru 3 of 3, for this temperature plateau prior to going to the next plateau.

_____
TEST DIRECTOR

_____
BECHTEL
ENGINEERING

[2.3] **RECORD** hot gaps for Auxiliary Feedwater System Pipe Rupture Protective Devices, for Loop 1, Attachment 10, Page 55 of 72, and for Loop 4, Attachment 10, Page 56 of 72, and **PERFORM** any evaluations of problems found, for this temperature plateau prior to going to the next plateau.

_____
TEST DIRECTOR

_____
BECHTEL
ENGINEERING

[2.4] **PERFORM** a surveillance walk down on the steam supply for the TDAFP Attachment 26, Pages 1 thru 3 of 3 per guidelines of Appendix D and **PERFORM** any evaluations of problems found, for this temperature plateau prior to going to the next plateau.

_____
TEST DIRECTOR

_____
BECHTEL
ENGINEERING

Date _____

6.8 Operation of the Turbine Driven Auxiliary Feedwater Pump (TDAFP) (continued)

[2.5] **VERIFY** all piping movements and component settings at this plateau for the Turbine Driven Auxiliary Feedwater system are in accordance with the Acceptance Criteria, on Attachment 26, Pages 1 thru 3, **AND** that **NO** piping is being restrained from thermal growth other than by design, or movements have been reconciled by BECHTEL ENGINEERING, for this temperature plateau, prior to going to the next plateau. **(ACC CRIT 5.0[2], 5.0[3], 5.0[4], 5.0[5])**

_____
TEST DIRECTOR

_____
BECHTEL
ENGINEERING

Date _____

6.9 Operation of the Feedwater System

NOTE

The Temperature and steady state conditions should be held steady until the Test Director and Bechtel Engineering have ENSURED all piping movements and support readings have been accepted or evaluated before going to the next plateau.

[1] **VERIFY** prerequisites listed in Section 4.0 for Subsection 6.9 have been completed.

_____
TEST DIRECTOR

NOTES

1) Problems or suspected problems shall be reported, evaluated and closed out on Problem Report form, Appendix E, Page 2 of 2, of this Attachment and attached to Attachment 31.
2) The Problem Report Log will be completed and attached to Attachment 30.
3) Problem Report form, Appendix E, Page 2 of 2 may be copied and completed as needed.
4) If the problem can not be resolved on a Problem Report then the Test Director will complete a Test Deficiency form for Major Test Deficiencies or non-conformances in accordance with approved procedures, i.e.; SMP-14.0, Appendix B, and attach to Attachment 33.
5) The Test Deficiency log will be completed and attached to Attachment 32.
6) All items identified will be entered in the Chronological Test Log and placed with Attachment 29.

[2] **WHEN** the Feedwater System, during the performance of 2-PTI-003A-03, is at the 557°F (553°F - 560°F) plateau, **AND** a MINIMUM of one hour soak time for the system has been allowed, **THEN**

PERFORM the following:

Date _____

6.9 Operation of the Feedwater System (continued)

[2.1] **RECORD** temperature data at points, RTD-12 thru RTD-15 for Main Feedwater and RTD-16 thru RTD-21 for Feedwater Bypass, and movement data at points FW-18 thru FW-23 for Main Feedwater and FW-1 thru FW-13 for Feedwater Bypass from the Data Acquisition System, **AND**

ATTACH computer data sheets to Attachment 9.

_____
TEST DIRECTOR

[2.2] **RECORD** Dynamic Snubbers and Spring Hanger settings for the Feedwater System, Main Feedwater Line, in Attachment 22, Page 10 of 37, and **PERFORM** any evaluations of problems found, for this temperature plateau prior to going to the next plateau.

_____
TEST DIRECTOR

_____
BECHTEL
ENGINEERING

[2.3] **RECORD** Dynamic Snubbers and Spring Hanger settings for the Feedwater System, Bypass Line, in Attachment 22, Pages 11 and 12 of 37, and **PERFORM** any evaluations of problems found, for this temperature plateau prior to going to the next plateau.

_____
TEST DIRECTOR

_____
BECHTEL
ENGINEERING

[2.4] **RECORD** Dynamic Snubbers and Spring Hanger settings for the Feedwater System, Warm up Line, in Attachment 22, Page 13 of 37, and **PERFORM** any evaluations of problems found, for this temperature plateau prior to going to the next plateau.

_____
TEST DIRECTOR

_____
BECHTEL
ENGINEERING

Date _____

6.9 Operation of the Feedwater System (continued)

[2.5] **RECORD** hot gaps for Feedwater System Pipe Rupture Protective Devices, for Bypass, Attachment 10, Page 54 of 72, and Main Feedwater Line, Attachment 10, Pages 36 thru 53 of 72, and **PERFORM** any evaluations of problems found, for this temperature plateau prior to going to the next plateau.

_____
TEST DIRECTOR

_____
BECHTEL
ENGINEERING

[2.6] **PERFORM** a surveillance walk down on the Feedwater System per guidelines of Appendix D for the Bypass Line, Warm up Line and Main Feedwater Line and **PERFORM** any evaluations of problems found, for this temperature plateau prior to going to the next plateau.

_____
TEST DIRECTOR

_____
BECHTEL
ENGINEERING

[2.7] **VERIFY** all piping movements and component settings for the Bypass Line, Warm up Line and Main Feedwater Line at this plateau are in accordance with the Acceptance Criteria, in Attachment 22, Pages 10 thru 13 of 37, **AND** that **NO** piping is being restrained from thermal growth other than by design, or movements have been reconciled by BECHTEL ENGINEERING, for this temperature plateau, prior to going to the next plateau. **(ACC CRIT 5.0[2], 5.0[3], 5.0[4], 5.0[5])**

_____
TEST DIRECTOR

_____
BECHTEL
ENGINEERING

[3] **WHEN** the Motor Driven Auxiliary Feedwater System, during the performance of 2-PTI-003B-05, at the 450°F (445°F - 455°F) plateau, **AND** a MINIMUM of one hour soak time for the system has been allowed, **THEN**

PERFORM the following:

Date _____

6.9 Operation of the Feedwater System (continued)

[3.1] **RECORD** Dynamic Snubbers and Spring Hanger settings for the Motor Driven Auxiliary Feedwater Pump "A", in Attachment 22 Page 14 of 37, and **PERFORM** any evaluations of problems found, for this temperature plateau prior to going to the next plateau.

_____
TEST DIRECTOR

_____
BECHTEL

[3.2] **RECORD** Dynamic Snubbers and Spring Hanger settings for the Motor Driven Auxiliary Feedwater Pump "B", in Attachment 22, Page 15 of 37, and **PERFORM** any evaluations of problems found, for this temperature plateau prior to going to the next plateau.

_____
TEST DIRECTOR

_____
BECHTEL

[3.3] **PERFORM** a surveillance walk down per guidelines of Appendix D for the Motor Driven Auxiliary Feedwater Pump "A" to the Steam Generators and **PERFORM** any evaluations of problems found, for this temperature plateau prior to going to the next plateau.

_____
TEST DIRECTOR

_____
BECHTEL
ENGINEERING

[3.4] **PERFORM** a surveillance walk down per guidelines of Appendix D for the Motor Driven Auxiliary Feedwater Pump "B" to the Steam Generators and **PERFORM** any evaluations of problems found, for this temperature plateau prior to going to the next plateau.

_____
TEST DIRECTOR

_____
BECHTEL
ENGINEERING

Date _____

6.9 Operation of the Feedwater System (continued)

[3.5] **VERIFY** all piping movements and component settings for the Motor Driven Auxiliary Feedwater Pump “A” and “B” at this plateau are in accordance with the Acceptance Criteria, in Attachment 22 14 and 15 of 37, **AND** that **NO** piping is being restrained from thermal growth other than by design, or movements have been reconciled by BECHTEL ENGINEERING, for this temperature plateau, prior to going to the next plateau. **(ACC CRIT 5.0[3], 5.0[4])**

_____
TEST DIRECTOR

_____
BECHTEL
ENGINEERING

Date _____

6.10 Verification of Acceptance Criteria for Heat up

NOTE

The Temperature and steady state conditions should be held steady until the Test Director and Bechtel Engineering have ENSURED all piping movements and support readings have been accepted or evaluated before going to the next plateau.

[1] **VERIFY** piping movements and component settings have been reviewed by the Test Director and Bechtel Engineering and are in accordance with the Acceptance Criteria, shown on Attachments 3, 4, 5, 6, 7, 10, 12, 13 14 15 16, 18, 19, 20, 21, 22, 23, 24, 25, 26, 27, **AND** that **NO** piping is being restrained from thermal growth other than by design, or movements have been reconciled by BECHTEL ENGINEERING.
(PER 178000 ACTION 010) **(ACC CRIT 5.0[2], 5.0[3], 5.0[4], 5.0[5], 5.0[6])**

_____
TEST DIRECTOR

_____
BECHTEL
ENGINEERING

[2] **ENSURE** performance of any evaluations of problems found, for the Systems and Components listed in Subsections 6.1 thru 6.9, have been completed or corrected as required, prior to going to the next plateau.

_____
TEST DIRECTOR

_____
BECHTEL
ENGINEERING

Date _____

6.11 Cool down of the Reactor Coolant System from 160°F to 140°F

NOTE

The Temperature and steady state conditions should be held steady until the Test Director and Bechtel Engineering have ENSURED all piping movements and support readings have been accepted or evaluated before going to the next plateau.

[1] **VERIFY** prerequisites listed in Section 4.0 for Subsection 6.11 have been completed.

_____
TEST DIRECTOR

[2] **WHEN** the individual portions of Chemical & Volume Control System are in operation, **THEN**

RECORD temperature/movement data from the Data Acquisition System, **AND**

ATTACH computer data sheets to Attachment 9.

_____
TEST DIRECTOR.

[3] **WHEN** the Chemical & Volume Control System is in operation using Auxiliary Spray, per 2-TOP-068-04, Section 8.2 **AND** a MINIMUM of one hour soak time for the system has been allowed, **THEN**

PERFORM the following:

[3.1] **RECORD** Dynamic Snubbers and Spring Hanger settings for the CVCS Auxiliary Spray Flow Path and **PERFORM** any evaluations of problems found, in Attachment 23, Page 6 of 6, for this temperature plateau prior to going to the next plateau.

_____
TEST DIRECTOR

_____
BECHTEL
ENGINEERING

Date _____

6.11 Cool down of the Reactor Coolant System from 160°F to 140°F (continued)

[3.2] **PERFORM** a surveillance walk down on the CVCS Auxiliary Spray Flow Path per guidelines of Appendix D and **PERFORM** any evaluations of problems found, for this temperature plateau prior to going to the next plateau.

_____
TEST DIRECTOR

_____
BECHTEL
ENGINEERING

[3.3] **VERIFY** all piping movements and component settings at this plateau are in accordance with the Acceptance Criteria, Attachment 23, Page 6 of 6, **AND** that **NO** piping is being restrained from thermal growth other than by design, or movements have been reconciled by BECHTEL ENGINEERING, for this temperature plateau, prior to going to the next plateau. **(ACC CRIT 5.0[2], 5.0[3], 5.0[4])**

_____
TEST DIRECTOR

_____
BECHTEL
ENGINEERING

Date _____

6.12 Return of the Reactor Coolant System Temperature to Ambient Conditions of Less Than 105°F

[1] **VERIFY** prerequisites listed in Section 4.0 for Subsection 6.12 have been completed.

_____
TEST DIRECTOR

NOTES

1) Problems or suspected problems shall be reported, evaluated and closed out on Problem Report form, Appendix E, Page 2 of 2, of this Attachment and attached to Attachment 31.
2) The Problem Report Log will be completed and attached to Attachment 30.
3) Problem Report form, Appendix E, Page 2 of 2 may be copied and completed as needed.
4) If the problem can not be resolved on a Problem Report then the Test Director will complete a Test Deficiency form for Major Test Deficiencies or non-conformances in accordance with approved procedures, i.e.; SMP-14.0, Appendix B, and attach to Attachment 33.
5) The Test Deficiency log will be completed and attached to Attachment 32.
6) All items identified will be entered in the Chronological Test Log and placed with Attachment 29.

[2] **WHEN** the Reactor Coolant temperature has decreased to less than 105°F, **THEN**

PERFORM the following:

[2.1] **RECORD** Return to Ambient data from the Data Acquisition System for Reactor Coolant and Associated Systems, on Attachment 8, **AND**

ATTACH computer data sheets to Attachment 9.

_____
TEST DIRECTOR

Date _____

6.12 Return of the Reactor Coolant System Temperature to Ambient Conditions of Less Than 105°F (continued)

[2.2] **RECORD** settings for Dynamic Snubbers and Variable Springs and Constant Springs for Reactor Coolant and Associated Systems and **PERFORM** any evaluations of problems found, on Attachment 27, Pages 1 thru 32 of 37, for this temperature plateau prior to going to the next plateau.

_____
TEST DIRECTOR

_____
BECHTEL
ENGINEERING

NOTE
The Steam Generators may be verified in any order.

[2.3] **RECORD** Dynamic Snubbers and Spring Hanger settings for the Steam Generator Blowdown System and **PERFORM** any evaluations of problems found, in Attachment 25, for this temperature plateau, prior to going to the next plateau.

A. Steam Generator No. 1, Page 1 of 6 ☐

B. Steam Generator No. 2, Page 2 of 6 ☐

C. Steam Generator No. 3, Pages 3 and 4 of 6 ☐

D. Steam Generator No. 4, Pages 5 and 6 of 6 ☐

_____
TEST DIRECTOR

_____
BECHTEL
ENGINEERING

[2.4] **RECORD** Return to Ambient gaps for Pipe Rupture Protective Devices on Reactor Coolant and Associated Systems and **PERFORM** any evaluations of problems found, on Attachment 10, for this temperature plateau prior to going to the next plateau.

_____
TEST DIRECTOR

_____
BECHTEL
ENGINEERING

Date _____

6.12 Return of the Reactor Coolant System Temperature to Ambient Conditions of Less Than 105°F (continued)

[2.5] **RECORD** cold gaps and **PERFORM** any evaluations of problems found for REACTOR COOLANT SYSTEM Component Supports, on Attachment 17, for this temperature plateau prior to going to the next plateau.

_____
BECHTEL MECHANICAL CONSTRUCTION

_____
BECHTEL ENGINEERING

[2.6] **PERFORM** a surveillance walk down of all monitored systems per Appendix D and perform any evaluations of problems found, for this temperature plateau prior to going to the next plateau.

_____
TEST DIRECTOR

_____
BECHTEL ENGINEERING

[2.7] **PERFORM** a surveillance walk down on the Steam Generator Blowdown System per guidelines of Appendix D and **PERFORM** any evaluations of problems found, for this temperature plateau prior to going to the next plateau.

A. Steam Generator No. 1 ☐

B. Steam Generator No. 2 ☐

C. Steam Generator No. 3 ☐

D. Steam Generator No. 4 ☐

_____
TEST DIRECTOR

_____
BECHTEL ENGINEERING

Date _____

6.12 Return of the Reactor Coolant System Temperature to Ambient Conditions of Less Than 105°F (continued)

[3] **PERFORM** the following on piping from Loop #4 Hot Leg to RHR Pumps A and B Suction common portion:

[3.1] **RECORD** Dynamic Snubbers and Spring Hanger settings from Loop #4 Hot Leg to RHR Pumps A and B Suction common portion and **PERFORM** any evaluations of problems found, in Attachment 27, Page 33 and 34 of 37, for this temperature plateau prior to going to the next plateau.

_____
TEST DIRECTOR

_____
BECHTEL
ENGINEERING

[3.2] **PERFORM** a surveillance walk down of the piping from Loop #4 Hot Leg to RHR Pumps A and B Suction common portion, per guidelines of Appendix D and **PERFORM** any evaluations of problems found, for this temperature plateau, prior to going to the next plateau.

_____
TEST DIRECTOR

_____
BECHTEL
ENGINEERING

Date _____

6.12 Return of the Reactor Coolant System Temperature to Ambient Conditions of Less Than 105°F (continued)

[4] **PERFORM** the following on piping from Loop #4 Hot Leg to RHR Pump A Suction:

[4.1] **RECORD** Dynamic Snubbers and Spring Hanger settings from Loop #4 Hot Leg to RHR Pump A Suction and **PERFORM** any evaluations of problems found, in Attachment 27, Page 34 of 37, for this temperature plateau prior to going to the next plateau.

_____
TEST DIRECTOR

_____
BECHTEL
ENGINEERING

[4.2] **PERFORM** a surveillance walk down of the piping from Loop #4 Hot Leg to RHR Pump A Suction, per guidelines of Appendix D and **PERFORM** any evaluations of problems found, for this temperature plateau, prior to going to the next plateau.

_____
TEST DIRECTOR

_____
BECHTEL
ENGINEERING

Date _____

6.12 Return of the Reactor Coolant System Temperature to Ambient Conditions of Less Than 105°F (continued)

[5] **PERFORM** the following on piping from Loop #4 Hot Leg to RHR Pump B Suction:

[5.1] **RECORD** Dynamic Snubbers and Spring Hanger settings from Loop #4 Hot Leg to RHR Pump B Suction and **PERFORM** any evaluations of problems found, in Attachment 27, Page 35 of 37, for this temperature plateau prior to going to the next plateau.

_____
TEST DIRECTOR

_____
BECHTEL
ENGINEERING

[5.2] **PERFORM** a surveillance walk down of the piping from Loop #4 Hot Leg to RHR Pump B Suction, per guidelines of Appendix D and **PERFORM** any evaluations of problems found, for this temperature plateau, prior to going to the next plateau.

_____
TEST DIRECTOR

_____
BECHTEL
ENGINEERING

Date _____

6.12 Return of the Reactor Coolant System Temperature to Ambient Conditions of Less Than 105°F (continued)

[6] **PERFORM** the following on RHR Train "A" from discharge of RHR Pump A-A thru the RHR Heat Exchanger A and RHR Heat Exchanger A Bypass Line to Cold Leg Injection:

[6.1] **RECORD** Dynamic Snubbers and Spring Hanger settings for RHR Train "A" from discharge of RHR Pump A-A thru the RHR Heat Exchanger A and RHR Heat Exchanger A Bypass Line to Cold Leg Injection and **PERFORM** any evaluations of problems found, in Attachment 27, Page 36 of 37, for this temperature plateau prior to going to the next plateau.

_____
TEST DIRECTOR

_____
BECHTEL
ENGINEERING

[6.2] **PERFORM** a surveillance walk down of the RHR Train "A" Cold Leg Injection system per guidelines of Appendix D and **PERFORM** any evaluations of problems found, for this temperature plateau prior to going to the next plateau.

_____
TEST DIRECTOR

_____
BECHTEL
ENGINEERING

Date _____

6.12 Return of the Reactor Coolant System Temperature to Ambient Conditions of Less Than 105°F (continued)

[7] **PERFORM** the following on RHR Train "B" from discharge of RHR Pump B-B thru the RHR Heat Exchanger B and RHR Heat Exchanger B Bypass Line to Cold Leg Injection:

[7.1] **RECORD** Dynamic Snubbers and Spring Hanger settings for RHR Train "B" from discharge of RHR Pump B-B thru the RHR Heat Exchanger B and RHR Heat Exchanger B Bypass Line to Cold Leg Injection and **PERFORM** any evaluations of problems found, in Attachment 27, Page 37 of 37, for this temperature plateau prior to going to the next plateau.

_____
TEST DIRECTOR

_____
BECHTEL ENGINEERING

[7.2] **PERFORM** a surveillance walk down of the RHR Train "B" Cold Leg Injection system, per guidelines of Appendix D and **PERFORM** any evaluations of problems found, for this temperature plateau prior to going to the next plateau.

_____
TEST DIRECTOR

_____
BECHTEL ENGINEERING

[8] **SUBMIT** test data to Bechtel Engineering for final evaluation. (PER 178000 ACTION 010)

_____
TEST DIRECTOR

VERIFY an engineering evaluation has been completed to verify piping movement and component settings are in accordance with the Acceptance Criteria, Attachment 27, Pages 1 thru 37 of 37, **AND** that piping has returned to its cold position consistent with design, or movements have been reconciled by BECHTEL ENGINEERING.
(PER 178000 ACTION 010) **(ACC CRIT 5.0[2], 5.0[3], 5.0[4], 5.0[5], 5.0[6])**

_____
TEST DIRECTOR

_____
BECHTEL ENGINEERING

Date _____

7.0 POST PERFORMANCE ACTIVITIES

[1] **ENSURE** equipment installed in Steps 4.3[2], 4.3[3], and 4.3[4] has been removed.

_____
TEST DIRECTOR

[2] **ENSURE** Post-test calibration of the M&TE used to record quantitative Acceptance Criteria has been satisfactorily performed and the results recorded on Measuring and Test Equipment (M&TE) Log, Appendix C.

_____
TEST DIRECTOR

[3] **ENSURE** participants who initialed or signed steps in the prerequisites section, instruction section, test logs or data sheets, enter their initials and signature on SMP-9.0, Appendix C, Signature Log and **PLACE** it with Attachment 28 of this procedure.

_____
TEST DIRECTOR

NOTE
Alignment of system upon completion of testing will be at the discretion of the SM/US.

[4] **NOTIFY** the SM/US of the test completion.

_____
TEST DIRECTOR

8.0 RECORDS

A. QA Records

The following documents are QA records and are handled in accordance with the approved Document Control Records Management (DCRM) Program.

Complete Test Package

B. Non-QA Records

None

Appendix A
(Page 1 of 2)

TEST PROCEDURES/INSTRUCTIONS REFERENCE REVIEW

Date _____

NOTES

1) Additional copies of this table may be made as necessary.
2) Initial and date indicates review has been completed for impact.

PROCEDURE/ INSTRUCTION	REVISION/CHANGES	IMPACT Yes/No	INITIAL AND DATE
UNIT 2 FSAR - AMENDMENT 112			
SECTION 3.9.2			
CHAPTER 14 TABLE 14.2-1 SHEET 73, 78 AND 79 OF 89			
2-TSD-HFT-1 Rev. 4			
LTR-PAFM-11-23, Rev. 1, Watts Bar Unit 2 - RCL Primary Equipment Supports Shim Gap Criteria Summary			
LTR-PAFM-10-119, Rev. 1, Watts Bar Unit 2 - RCL Piping System Normal Operating Condition and Hot Functional Testing Thermal Displacements			

Appendix A
(Page 2 of 2)

TEST PROCEDURES/INSTRUCTIONS REFERENCE REVIEW

Date _____

PROCEDURE/ INSTRUCTION	REVISION/CHANGES	IMPACT Yes/No	INITIAL AND DATE

Appendix B
(Page 1 of 1)

TEMPORARY CONDITION LOG

Date _____

NOTE

This form will be N/A'd if no temporary condition existed. Additional copies of this table may be made as necessary.

ITEM NUMBER	TEMPORARY CONDITION DESCRIPTION	PERFORMED		RETURNED TO NORMAL	
		Step Number	Perform By/Date 2nd By/Date	Step Number	Returned By/Date 2nd By/Date

Appendix C
(Page 1 of 92)

MEASURING AND TEST EQUIPMENT LOG

Date _____

Additional copies of this Appendix may be copied as necessary.

Instruction No. _____ Revision _____ Page _____

M&TE ID #	DESCRIPTION	CAL DUE DATE	*FILLED & VENTED	*PLACED IN-SERVICE	USED FOR QUANTITATIVE ACCEPT. CRIT.		**POST-TEST CAL DATE	**POST-TEST CAL ACCEPT
	RANGE / ACCURACY		INIT/DATE	INIT/DATE	YES	NO		INIT/DATE
	DIGITAL CALIPER							
	N/A							
	DIGITAL CALIPER							
	N/A							
	DIGITAL CALIPER							
	N/A							
	DIGITAL CALIPER							
	N/A							
	DIGITAL CALIPER							
	N/A							
	DIGITAL CALIPER							
	N/A							

* This item may be signed by person performing the task. This may be N/A'd if M&TE is not required to be filled and vented or placed in service.
** May be identified as not applicable (N/A) if M&TE was not used to verify/record quantitative acceptance criteria.

Appendix C
(Page 2 of 92)

MEASURING AND TEST EQUIPMENT LOG

Date _____

Instruction No. _____ Revision _____ Page _____

M&TE ID #	DESCRIPTION	CAL DUE DATE	*FILLED & VENTED	*PLACED IN-SERVICE	USED FOR QUANTITATIVE ACCEPT. CRIT.		**POST-TEST CAL DATE	**POST-TEST CAL ACCEPT
	RANGE / ACCURACY		INIT/DATE	INIT/DATE	YES	NO		INIT/DATE
	DIGITAL CALIPER N/A							
	DIGITAL CALIPER N/A							
	DIGITAL CALIPER N/A							
	DIGITAL CALIPER N/A							
	DIGITAL CALIPER N/A							
	DIGITAL CALIPER N/A							

* This item may be signed by person performing the task. This may be N/A'd if M&TE is not required to be filled and vented or placed in service.
** May be identified as not applicable (N/A) if M&TE was not used to verify/record quantitative acceptance criteria.

Appendix C
(Page 3 of 92)

MEASURING AND TEST EQUIPMENT LOG

Date _____

Instruction No. _____ Revision _____ Page _____

M&TE ID #	DESCRIPTION / RANGE / ACCURACY	CAL DUE DATE	*FILLED & VENTED INIT/DATE	*PLACED IN-SERVICE INIT/DATE	USED FOR QUANTITATIVE ACCEPT. CRIT. YES	USED FOR QUANTITATIVE ACCEPT. CRIT. NO	**POST-TEST CAL DATE	**POST-TEST CAL ACCEPT INIT/DATE
	Agilent Technologies 34980A Data Logger 0-5 VOLTS ± 0.0005 Vdc							
	Agilent Technologies 34980A Data Logger 0-5 VOLTS ± 0.0005 Vdc							
	Agilent Technologies 34980A Data Logger 0-5 VOLTS ± 0.0005 Vdc							
	Global Specialties 1310 DC Power Supply 0-5 VOLTS ± 0.1% Output							
	Global Specialties 1310 DC Power Supply 0-5 VOLTS ± 0.1% Output							
	Global Specialties 1310 DC Power Supply 0-5 VOLTS ± 0.1% Output							

* This item may be signed by person performing the task. This may be N/A'd if M&TE is not required to be filled and vented or placed in service.
** May be identified as not applicable (N/A) if M&TE was not used to verify/record quantitative acceptance criteria.

Appendix C
(Page 4 of 92)

MEASURING AND TEST EQUIPMENT LOG

Date _____

Instruction No. _____ Revision _____ Page _____

M&TE ID #	DESCRIPTION / RANGE / ACCURACY	CAL DUE DATE	*FILLED & VENTED INIT/DATE	*PLACED IN-SERVICE INIT/DATE	USED FOR QUANTITATIVE ACCEPT. CRIT. YES	NO	**POST-TEST CAL DATE	**POST-TEST CAL ACCEPT INIT/DATE
	Global Specialties 1310 DC Power Supply 0-5 VOLTS ± 0.1% Output							
	Global Specialties 1310 DC Power Supply 0-5 VOLTS ± 0.1% Output							
	Pyromation, Inc., RTD Range 50°F - 600°F, Accuracy ± 2°F							
	Pyromation, Inc., RTD Range 50°F - 600°F, Accuracy ± 2°F							
	Pyromation, Inc., RTD Range 50°F - 600°F, Accuracy ± 2°F							
	Pyromation, Inc., RTD Range 50°F - 600°F, Accuracy ± 2°F							

* This item may be signed by person performing the task. This may be N/A'd if M&TE is not required to be filled and vented or placed in service.
** May be identified as not applicable (N/A) if M&TE was not used to verify/record quantitative acceptance criteria.

Appendix C
(Page 5 of 92)

MEASURING AND TEST EQUIPMENT LOG

Date _____

Instruction No. _____ Revision _____ Page _____

M&TE ID #	DESCRIPTION / RANGE / ACCURACY	CAL DUE DATE	*FILLED & VENTED INIT/DATE	*PLACED IN-SERVICE INIT/DATE	USED FOR QUANTITATIVE ACCEPT. CRIT. YES	NO	**POST-TEST CAL DATE	**POST-TEST CAL ACCEPT INIT/DATE
	Pyromation, Inc., RTD Range 50°F - 600°F, Accuracy ± 2°F							
	Pyromation, Inc., RTD Range 50°F - 600°F, Accuracy ± 2°F							
	Pyromation, Inc., RTD Range 50°F - 600°F, Accuracy ± 2°F							
	Pyromation, Inc., RTD Range 50°F - 600°F, Accuracy ± 2°F							
	Pyromation, Inc., RTD Range 50°F - 600°F, Accuracy ± 2°F							
	Pyromation, Inc., RTD Range 50°F - 600°F, Accuracy ± 2°F							

* This item may be signed by person performing the task. This may be N/A'd if M&TE is not required to be filled and vented or placed in service.
** May be identified as not applicable (N/A) if M&TE was not used to verify/record quantitative acceptance criteria.

Appendix C
(Page 6 of 92)

MEASURING AND TEST EQUIPMENT LOG

Date _____

Instruction No. _____ Revision _____ Page _____

M&TE ID #	DESCRIPTION / RANGE / ACCURACY	CAL DUE DATE	*FILLED & VENTED INIT/DATE	*PLACED IN-SERVICE INIT/DATE	USED FOR QUANTITATIVE ACCEPT. CRIT. YES	NO	**POST-TEST CAL DATE	**POST-TEST CAL ACCEPT INIT/DATE
	Pyromation, Inc., RTD Range 50°F - 600°F, Accuracy ± 2°F							
	Pyromation, Inc., RTD Range 50°F - 600°F, Accuracy ± 2°F							
	Pyromation, Inc., RTD Range 50°F - 600°F, Accuracy ± 2°F							
	Pyromation, Inc., RTD Range 50°F - 600°F, Accuracy ± 2°F							
	Pyromation, Inc., RTD Range 50°F - 600°F, Accuracy ± 2°F							
	Pyromation, Inc., RTD Range 50°F - 600°F, Accuracy ± 2°F							

* This item may be signed by person performing the task. This may be N/A'd if M&TE is not required to be filled and vented or placed in service.
** May be identified as not applicable (N/A) if M&TE was not used to verify/record quantitative acceptance criteria.

Appendix C
(Page 7 of 92)

MEASURING AND TEST EQUIPMENT LOG

Date _____

Instruction No. _____ Revision _____ Page _____

M&TE ID #	DESCRIPTION / RANGE / ACCURACY	CAL DUE DATE	*FILLED & VENTED INIT/DATE	*PLACED IN-SERVICE INIT/DATE	USED FOR QUANTITATIVE ACCEPT. CRIT. YES	NO	**POST-TEST CAL DATE	**POST-TEST CAL ACCEPT INIT/DATE
	Pyromation, Inc., RTD Range 50°F - 600°F, Accuracy ± 2°F							
	Pyromation, Inc., RTD Range 50°F - 600°F, Accuracy ± 2°F							
	Pyromation, Inc., RTD Range 50°F - 600°F, Accuracy ± 2°F							
	Pyromation, Inc., RTD Range 50°F - 600°F, Accuracy ± 2°F							
	Pyromation, Inc., RTD Range 50°F - 600°F, Accuracy ± 2°F							
	Pyromation, Inc., RTD Range 50°F - 600°F, Accuracy ± 2°F							

* This item may be signed by person performing the task. This may be N/A'd if M&TE is not required to be filled and vented or placed in service.
** May be identified as not applicable (N/A) if M&TE was not used to verify/record quantitative acceptance criteria.

Appendix C
(Page 8 of 92)

MEASURING AND TEST EQUIPMENT LOG

Date _____

Instruction No. _____ Revision _____ Page _____

M&TE ID #	DESCRIPTION / RANGE / ACCURACY	CAL DUE DATE	*FILLED & VENTED INIT/DATE	*PLACED IN-SERVICE INIT/DATE	USED FOR QUANTITATIVE ACCEPT. CRIT. YES	USED FOR QUANTITATIVE ACCEPT. CRIT. NO	**POST-TEST CAL DATE	**POST-TEST CAL ACCEPT INIT/DATE
	Pyromation, Inc., RTD Range 50°F - 600°F, Accuracy ± 2°F							
	Pyromation, Inc., RTD Range 50°F - 600°F, Accuracy ± 2°F							
	Pyromation, Inc., RTD Range 50°F - 600°F, Accuracy ± 2°F							
	Pyromation, Inc., RTD Range 50°F - 600°F, Accuracy ± 2°F							
	Pyromation, Inc., RTD Range 50°F - 600°F, Accuracy ± 2°F							
	Pyromation, Inc., RTD Range 50°F - 600°F, Accuracy ± 2°F							

* This item may be signed by person performing the task. This may be N/A'd if M&TE is not required to be filled and vented or placed in service.
** May be identified as not applicable (N/A) if M&TE was not used to verify/record quantitative acceptance criteria.

Appendix C
(Page 9 of 92)

MEASURING AND TEST EQUIPMENT LOG

Date _____

Instruction No. _____ Revision _____ Page _____

M&TE ID #	DESCRIPTION / RANGE / ACCURACY	CAL DUE DATE	*FILLED & VENTED INIT/DATE	*PLACED IN-SERVICE INIT/DATE	USED FOR QUANTITATIVE ACCEPT. CRIT. YES	NO	**POST-TEST CAL DATE	**POST-TEST CAL ACCEPT INIT/DATE
	Pyromation, Inc., RTD Range 50°F - 600°F, Accuracy ± 2°F							
	Pyromation, Inc., RTD Range 50°F - 600°F, Accuracy ± 2°F							
	Pyromation, Inc., RTD Range 50°F - 600°F, Accuracy ± 2°F							
	Pyromation, Inc., RTD Range 50°F - 600°F, Accuracy ± 2°F							
	Pyromation, Inc., RTD Range 50°F - 600°F, Accuracy ± 2°F							
	Pyromation, Inc., RTD Range 50°F - 600°F, Accuracy ± 2°F							

* This item may be signed by person performing the task. This may be N/A'd if M&TE is not required to be filled and vented or placed in service.
** May be identified as not applicable (N/A) if M&TE was not used to verify/record quantitative acceptance criteria.

Appendix C
(Page 10 of 92)

MEASURING AND TEST EQUIPMENT LOG

Date _____

Instruction No. _____ Revision _____ Page _____

M&TE ID #	DESCRIPTION / RANGE / ACCURACY	CAL DUE DATE	*FILLED & VENTED INIT/DATE	*PLACED IN-SERVICE INIT/DATE	USED FOR QUANTITATIVE ACCEPT. CRIT. YES	USED FOR QUANTITATIVE ACCEPT. CRIT. NO	**POST-TEST CAL DATE	**POST-TEST CAL ACCEPT INIT/DATE
	Pyromation, Inc., RTD Range 50°F - 600°F, Accuracy ± 2°F							
	Pyromation, Inc., RTD Range 50°F - 600°F, Accuracy ± 2°F							
	Pyromation, Inc., RTD Range 50°F - 600°F, Accuracy ± 2°F							
	Pyromation, Inc., RTD Range 50°F - 600°F, Accuracy ± 2°F							
	Pyromation, Inc., RTD Range 50°F - 600°F, Accuracy ± 2°F							
	Pyromation, Inc., RTD Range 50°F - 600°F, Accuracy ± 2°F							

* This item may be signed by person performing the task. This may be N/A'd if M&TE is not required to be filled and vented or placed in service.
** May be identified as not applicable (N/A) if M&TE was not used to verify/record quantitative acceptance criteria.

Appendix C
(Page 11 of 92)

MEASURING AND TEST EQUIPMENT LOG

Date _____

Instruction No. _____ Revision _____ Page _____

M&TE ID #	DESCRIPTION / RANGE / ACCURACY	CAL DUE DATE	*FILLED & VENTED INIT/DATE	*PLACED IN-SERVICE INIT/DATE	USED FOR QUANTITATIVE ACCEPT. CRIT. YES	NO	**POST-TEST CAL DATE	**POST-TEST CAL ACCEPT INIT/DATE
	Pyromation, Inc., RTD Range 50°F - 600°F, Accuracy ± 2°F							
	Pyromation, Inc., RTD Range 50°F - 600°F, Accuracy ± 2°F							
	Pyromation, Inc., RTD Range 50°F - 600°F, Accuracy ± 2°F							
	Pyromation, Inc., RTD Range 50°F - 600°F, Accuracy ± 2°F							
	Pyromation, Inc., RTD Range 50°F - 600°F, Accuracy ± 2°F							
	Pyromation, Inc., RTD Range 50°F - 600°F, Accuracy ± 2°F							

* This item may be signed by person performing the task. This may be N/A'd if M&TE is not required to be filled and vented or placed in service.
** May be identified as not applicable (N/A) if M&TE was not used to verify/record quantitative acceptance criteria.

Appendix C
(Page 12 of 92)

MEASURING AND TEST EQUIPMENT LOG

Date _____

Instruction No. _____ Revision _____ Page _____

M&TE ID #	DESCRIPTION / RANGE / ACCURACY	CAL DUE DATE	*FILLED & VENTED INIT/DATE	*PLACED IN-SERVICE INIT/DATE	USED FOR QUANTITATIVE ACCEPT. CRIT. YES	NO	**POST-TEST CAL DATE	**POST-TEST CAL ACCEPT INIT/DATE
	Pyromation, Inc., RTD Range 50°F - 600°F, Accuracy ± 2°F							
	Pyromation, Inc., RTD Range 50°F - 600°F, Accuracy ± 2°F							
	Pyromation, Inc., RTD Range 50°F - 600°F, Accuracy ± 2°F							
	Pyromation, Inc., RTD Range 50°F - 600°F, Accuracy ± 2°F							
	Pyromation, Inc., RTD Range 50°F - 600°F, Accuracy ± 2°F							
	Pyromation, Inc., RTD Range 50°F - 600°F, Accuracy ± 2°F							

* This item may be signed by person performing the task. This may be N/A'd if M&TE is not required to be filled and vented or placed in service.
** May be identified as not applicable (N/A) if M&TE was not used to verify/record quantitative acceptance criteria.

Appendix C
(Page 13 of 92)

MEASURING AND TEST EQUIPMENT LOG

Date _____

Instruction No. _____ Revision _____ Page _____

M&TE ID #	DESCRIPTION / RANGE / ACCURACY	CAL DUE DATE	*FILLED & VENTED INIT/DATE	*PLACED IN-SERVICE INIT/DATE	USED FOR QUANTITATIVE ACCEPT. CRIT. YES	USED FOR QUANTITATIVE ACCEPT. CRIT. NO	**POST-TEST CAL DATE	**POST-TEST CAL ACCEPT INIT/DATE
	Pyromation, Inc., RTD Range 50°F - 600°F, Accuracy ± 2°F							
	Pyromation, Inc., RTD Range 50°F - 600°F, Accuracy ± 2°F							
	Pyromation, Inc., RTD Range 50°F - 600°F, Accuracy ± 2°F							
	Pyromation, Inc., RTD Range 50°F - 600°F, Accuracy ± 2°F							
	Pyromation, Inc., RTD Range 50°F - 600°F, Accuracy ± 2°F							
	Pyromation, Inc., RTD Range 50°F - 600°F, Accuracy ± 2°F							

* This item may be signed by person performing the task. This may be N/A'd if M&TE is not required to be filled and vented or placed in service.
** May be identified as not applicable (N/A) if M&TE was not used to verify/record quantitative acceptance criteria.

Appendix C
(Page 14 of 92)

MEASURING AND TEST EQUIPMENT LOG

Date _____

Instruction No. _____ Revision _____ Page _____

M&TE ID #	DESCRIPTION / RANGE / ACCURACY	CAL DUE DATE	*FILLED & VENTED INIT/DATE	*PLACED IN-SERVICE INIT/DATE	USED FOR QUANTITATIVE ACCEPT. CRIT. YES	USED FOR QUANTITATIVE ACCEPT. CRIT. NO	**POST-TEST CAL DATE	**POST-TEST CAL ACCEPT INIT/DATE
	Pyromation, Inc., RTD Range 50°F - 600°F, Accuracy ± 2°F							
	Pyromation, Inc., RTD Range 50°F - 600°F, Accuracy ± 2°F							
	Pyromation, Inc., RTD Range 50°F - 600°F, Accuracy ± 2°F							
	Pyromation, Inc., RTD Range 50°F - 600°F, Accuracy ± 2°F							
	Pyromation, Inc., RTD Range 50°F - 600°F, Accuracy ± 2°F							
	Pyromation, Inc., RTD Range 50°F - 600°F, Accuracy ± 2°F							

* This item may be signed by person performing the task. This may be N/A'd if M&TE is not required to be filled and vented or placed in service.
** May be identified as not applicable (N/A) if M&TE was not used to verify/record quantitative acceptance criteria.

Appendix C
(Page 15 of 92)

MEASURING AND TEST EQUIPMENT LOG

Date _____

Instruction No. _____ Revision _____ Page _____

M&TE ID #	DESCRIPTION / RANGE / ACCURACY	CAL DUE DATE	*FILLED & VENTED INIT/DATE	*PLACED IN-SERVICE INIT/DATE	USED FOR QUANTITATIVE ACCEPT. CRIT. YES	NO	**POST-TEST CAL DATE	**POST-TEST CAL ACCEPT INIT/DATE
	Pyromation, Inc., RTD Range 50°F - 600°F, Accuracy ± 2°F							
	Pyromation, Inc., RTD Range 50°F - 600°F, Accuracy ± 2°F							
	Pyromation, Inc., RTD Range 50°F - 600°F, Accuracy ± 2°F							
	Pyromation, Inc., RTD Range 50°F - 600°F, Accuracy ± 2°F							
	Pyromation, Inc., RTD Range 50°F - 600°F, Accuracy ± 2°F							
	Pyromation, Inc., RTD Range 50°F - 600°F, Accuracy ± 2°F							

* This item may be signed by person performing the task. This may be N/A'd if M&TE is not required to be filled and vented or placed in service.
** May be identified as not applicable (N/A) if M&TE was not used to verify/record quantitative acceptance criteria.

Appendix C
(Page 16 of 92)

MEASURING AND TEST EQUIPMENT LOG

Date _____

Instruction No. _____ Revision _____ Page _____

M&TE ID #	DESCRIPTION / RANGE / ACCURACY	CAL DUE DATE	*FILLED & VENTED INIT/DATE	*PLACED IN-SERVICE INIT/DATE	USED FOR QUANTITATIVE ACCEPT. CRIT. YES	USED FOR QUANTITATIVE ACCEPT. CRIT. NO	**POST-TEST CAL DATE	**POST-TEST CAL ACCEPT INIT/DATE
	Pyromation, Inc., RTD Range 50°F - 600°F, Accuracy ± 2°F							
	Pyromation, Inc., RTD Range 50°F - 600°F, Accuracy ± 2°F							
	Pyromation, Inc., RTD Range 50°F - 600°F, Accuracy ± 2°F							
	Pyromation, Inc., RTD Range 50°F - 600°F, Accuracy ± 2°F							
	Pyromation, Inc., RTD Range 50°F - 600°F, Accuracy ± 2°F							
	Pyromation, Inc., RTD Range 50°F - 600°F, Accuracy ± 2°F							

* This item may be signed by person performing the task. This may be N/A'd if M&TE is not required to be filled and vented or placed in service.
** May be identified as not applicable (N/A) if M&TE was not used to verify/record quantitative acceptance criteria.

Appendix C
(Page 17 of 92)

MEASURING AND TEST EQUIPMENT LOG

Date _____

Instruction No. _____ Revision _____ Page _____

M&TE ID #	DESCRIPTION / RANGE / ACCURACY	CAL DUE DATE	*FILLED & VENTED INIT/DATE	*PLACED IN-SERVICE INIT/DATE	USED FOR QUANTITATIVE ACCEPT. CRIT. YES	USED FOR QUANTITATIVE ACCEPT. CRIT. NO	**POST-TEST CAL DATE	**POST-TEST CAL ACCEPT INIT/DATE
	Pyromation, Inc., RTD Range 50°F - 600°F, Accuracy ± 2°F							
	Pyromation, Inc., RTD Range 50°F - 600°F, Accuracy ± 2°F							
	Pyromation, Inc., RTD Range 50°F - 600°F, Accuracy ± 2°F							
	Pyromation, Inc., RTD Range 50°F - 600°F, Accuracy ± 2°F							
	Pyromation, Inc., RTD Range 50°F - 600°F, Accuracy ± 2°F							
	Pyromation, Inc., RTD Range 50°F - 600°F, Accuracy ± 2°F							

* This item may be signed by person performing the task. This may be N/A'd if M&TE is not required to be filled and vented or placed in service.
** May be identified as not applicable (N/A) if M&TE was not used to verify/record quantitative acceptance criteria.

Appendix C
(Page 18 of 92)

MEASURING AND TEST EQUIPMENT LOG

Date _____

Instruction No. _____ Revision _____ Page _____

M&TE ID #	DESCRIPTION / RANGE / ACCURACY	CAL DUE DATE	*FILLED & VENTED INIT/DATE	*PLACED IN-SERVICE INIT/DATE	USED FOR QUANTITATIVE ACCEPT. CRIT. YES	USED FOR QUANTITATIVE ACCEPT. CRIT. NO	**POST-TEST CAL DATE	**POST-TEST CAL ACCEPT INIT/DATE
	Pyromation, Inc., RTD Range 50°F - 600°F, Accuracy ± 2°F							
	Pyromation, Inc., RTD Range 50°F - 600°F, Accuracy ± 2°F							
	Pyromation, Inc., RTD Range 50°F - 600°F, Accuracy ± 2°F							
	Pyromation, Inc., RTD Range 50°F - 600°F, Accuracy ± 2°F							
	Pyromation, Inc., RTD Range 50°F - 600°F, Accuracy ± 2°F							
	Pyromation, Inc., RTD Range 50°F - 600°F, Accuracy ± 2°F							

* This item may be signed by person performing the task. This may be N/A'd if M&TE is not required to be filled and vented or placed in service.
** May be identified as not applicable (N/A) if M&TE was not used to verify/record quantitative acceptance criteria.

Appendix C
(Page 19 of 92)

MEASURING AND TEST EQUIPMENT LOG

Date _____

Instruction No. _____ Revision _____ Page _____

M&TE ID #	DESCRIPTION / RANGE / ACCURACY	CAL DUE DATE	*FILLED & VENTED INIT/DATE	*PLACED IN-SERVICE INIT/DATE	USED FOR QUANTITATIVE ACCEPT. CRIT. YES	USED FOR QUANTITATIVE ACCEPT. CRIT. NO	**POST-TEST CAL DATE	**POST-TEST CAL ACCEPT INIT/DATE
	Pyromation, Inc., RTD Range 50°F - 600°F, Accuracy ± 2°F							
	Pyromation, Inc., RTD Range 50°F - 600°F, Accuracy ± 2°F							
	Pyromation, Inc., RTD Range 50°F - 600°F, Accuracy ± 2°F							

* This item may be signed by person performing the task. This may be N/A'd if M&TE is not required to be filled and vented or placed in service.
** May be identified as not applicable (N/A) if M&TE was not used to verify/record quantitative acceptance criteria.

Appendix C
(Page 20 of 92)

MEASURING AND TEST EQUIPMENT LOG

Date _____

Instruction No. _____ Revision _____ Page _____

M&TE ID #	DESCRIPTION / RANGE / ACCURACY	CAL DUE DATE	*FILLED & VENTED INIT/DATE	*PLACED IN-SERVICE INIT/DATE	USED FOR QUANTITATIVE ACCEPT. CRIT. YES	USED FOR QUANTITATIVE ACCEPT. CRIT. NO	**POST-TEST CAL DATE	**POST-TEST CAL ACCEPT INIT/DATE
	Houston Scientific 1850 Series Linear Position Transducers Range 0 - 10 inches, Accuracy ± 0.15% of full scale							
	Houston Scientific 1850 Series Linear Position Transducers Range 0 - 10 inches, Accuracy ± 0.15% of full scale							
	Houston Scientific 1850 Series Linear Position Transducers Range 0 - 10 inches, Accuracy ± 0.15% of full scale							

* This item may be signed by person performing the task. This may be N/A'd if M&TE is not required to be filled and vented or placed in service.

** May be identified as not applicable (N/A) if M&TE was not used to verify/record quantitative acceptance criteria.

Appendix C
(Page 21 of 92)

MEASURING AND TEST EQUIPMENT LOG

Date _____

Instruction No. _____ Revision _____ Page _____

M&TE ID #	DESCRIPTION / RANGE / ACCURACY	CAL DUE DATE	*FILLED & VENTED INIT/DATE	*PLACED IN-SERVICE INIT/DATE	USED FOR QUANTITATIVE ACCEPT. CRIT. YES	USED FOR QUANTITATIVE ACCEPT. CRIT. NO	**POST-TEST CAL DATE	**POST-TEST CAL ACCEPT INIT/DATE
	Houston Scientific 1850 Series Linear Position Transducers Range 0 - 10 inches, Accuracy ± 0.15% of full scale							
	Houston Scientific 1850 Series Linear Position Transducers Range 0 - 10 inches, Accuracy ± 0.15% of full scale							
	Houston Scientific 1850 Series Linear Position Transducers Range 0 - 10 inches, Accuracy ± 0.15% of full scale							

* This item may be signed by person performing the task. This may be N/A'd if M&TE is not required to be filled and vented or placed in service.
** May be identified as not applicable (N/A) if M&TE was not used to verify/record quantitative acceptance criteria.

Appendix C
(Page 22 of 92)

MEASURING AND TEST EQUIPMENT LOG

Date _____

Instruction No. _____ Revision _____ Page _____

M&TE ID #	DESCRIPTION / RANGE / ACCURACY	CAL DUE DATE	*FILLED & VENTED INIT/DATE	*PLACED IN-SERVICE INIT/DATE	USED FOR QUANTITATIVE ACCEPT. CRIT. YES	NO	**POST-TEST CAL DATE	**POST-TEST CAL ACCEPT INIT/DATE
	Houston Scientific 1850 Series Linear Position Transducers Range 0 - 10 inches, Accuracy ± 0.15% of full scale							
	Houston Scientific 1850 Series Linear Position Transducers Range 0 - 10 inches, Accuracy ± 0.15% of full scale							
	Houston Scientific 1850 Series Linear Position Transducers Range 0 - 10 inches, Accuracy ± 0.15% of full scale							

* This item may be signed by person performing the task. This may be N/A'd if M&TE is not required to be filled and vented or placed in service.
** May be identified as not applicable (N/A) if M&TE was not used to verify/record quantitative acceptance criteria.

Appendix C
(Page 23 of 92)

MEASURING AND TEST EQUIPMENT LOG

Date _____

Instruction No. _____ Revision _____ Page _____

M&TE ID #	DESCRIPTION / RANGE / ACCURACY	CAL DUE DATE	*FILLED & VENTED INIT/DATE	*PLACED IN-SERVICE INIT/DATE	USED FOR QUANTITATIVE ACCEPT. CRIT. YES	NO	**POST-TEST CAL DATE	**POST-TEST CAL ACCEPT INIT/DATE
	Houston Scientific 1850 Series Linear Position Transducers Range 0 - 10 inches, Accuracy ± 0.15% of full scale							
	Houston Scientific 1850 Series Linear Position Transducers Range 0 - 10 inches, Accuracy ± 0.15% of full scale							
	Houston Scientific 1850 Series Linear Position Transducers Range 0 - 10 inches, Accuracy ± 0.15% of full scale							

* This item may be signed by person performing the task. This may be N/A'd if M&TE is not required to be filled and vented or placed in service.
** May be identified as not applicable (N/A) if M&TE was not used to verify/record quantitative acceptance criteria.

Appendix C
(Page 24 of 92)

MEASURING AND TEST EQUIPMENT LOG

Date _____

Instruction No. _____ Revision _____ Page _____

M&TE ID #	DESCRIPTION / RANGE / ACCURACY	CAL DUE DATE	*FILLED & VENTED INIT/DATE	*PLACED IN-SERVICE INIT/DATE	USED FOR QUANTITATIVE ACCEPT. CRIT. YES	USED FOR QUANTITATIVE ACCEPT. CRIT. NO	**POST-TEST CAL DATE	**POST-TEST CAL ACCEPT INIT/DATE
	Houston Scientific 1850 Series Linear Position Transducers Range 0 - 10 inches, Accuracy ± 0.15% of full scale							
	Houston Scientific 1850 Series Linear Position Transducers Range 0 - 10 inches, Accuracy ± 0.15% of full scale							
	Houston Scientific 1850 Series Linear Position Transducers Range 0 - 10 inches, Accuracy ± 0.15% of full scale							

* This item may be signed by person performing the task. This may be N/A'd if M&TE is not required to be filled and vented or placed in service.
** May be identified as not applicable (N/A) if M&TE was not used to verify/record quantitative acceptance criteria.

Appendix C
(Page 25 of 92)

MEASURING AND TEST EQUIPMENT LOG

Date _____

Instruction No. _____ Revision _____ Page _____

M&TE ID #	DESCRIPTION / RANGE / ACCURACY	CAL DUE DATE	*FILLED & VENTED INIT/DATE	*PLACED IN-SERVICE INIT/DATE	USED FOR QUANTITATIVE ACCEPT. CRIT. YES	NO	**POST-TEST CAL DATE	**POST-TEST CAL ACCEPT INIT/DATE
	Houston Scientific 1850 Series Linear Position Transducers Range 0 - 10 inches, Accuracy ± 0.15% of full scale							
	Houston Scientific 1850 Series Linear Position Transducers Range 0 - 10 inches, Accuracy ± 0.15% of full scale							
	Houston Scientific 1850 Series Linear Position Transducers Range 0 - 10 inches, Accuracy ± 0.15% of full scale							

* This item may be signed by person performing the task. This may be N/A'd if M&TE is not required to be filled and vented or placed in service.
** May be identified as not applicable (N/A) if M&TE was not used to verify/record quantitative acceptance criteria.

Appendix C
(Page 26 of 92)

MEASURING AND TEST EQUIPMENT LOG

Date _____

Instruction No. _____ Revision _____ Page _____

M&TE ID #	DESCRIPTION / RANGE / ACCURACY	CAL DUE DATE	*FILLED & VENTED INIT/DATE	*PLACED IN-SERVICE INIT/DATE	USED FOR QUANTITATIVE ACCEPT. CRIT. YES	USED FOR QUANTITATIVE ACCEPT. CRIT. NO	**POST-TEST CAL DATE	**POST-TEST CAL ACCEPT INIT/DATE
	Houston Scientific 1850 Series Linear Position Transducers Range 0 - 10 inches, Accuracy ± 0.15% of full scale							
	Houston Scientific 1850 Series Linear Position Transducers Range 0 - 10 inches, Accuracy ± 0.15% of full scale							
	Houston Scientific 1850 Series Linear Position Transducers Range 0 - 10 inches, Accuracy ± 0.15% of full scale							

* This item may be signed by person performing the task. This may be N/A'd if M&TE is not required to be filled and vented or placed in service.
** May be identified as not applicable (N/A) if M&TE was not used to verify/record quantitative acceptance criteria.

Appendix C
(Page 27 of 92)

MEASURING AND TEST EQUIPMENT LOG

Date _____

Instruction No. _____ Revision _____ Page _____

M&TE ID #	DESCRIPTION / RANGE / ACCURACY	CAL DUE DATE	*FILLED & VENTED INIT/DATE	*PLACED IN-SERVICE INIT/DATE	USED FOR QUANTITATIVE ACCEPT. CRIT. YES	USED FOR QUANTITATIVE ACCEPT. CRIT. NO	**POST-TEST CAL DATE	**POST-TEST CAL ACCEPT INIT/DATE
	Houston Scientific 1850 Series Linear Position Transducers Range 0 - 10 inches, Accuracy ± 0.15% of full scale							
	Houston Scientific 1850 Series Linear Position Transducers Range 0 - 10 inches, Accuracy ± 0.15% of full scale							
	Houston Scientific 1850 Series Linear Position Transducers Range 0 - 10 inches, Accuracy ± 0.15% of full scale							

* This item may be signed by person performing the task. This may be N/A'd if M&TE is not required to be filled and vented or placed in service.

** May be identified as not applicable (N/A) if M&TE was not used to verify/record quantitative acceptance criteria.

Appendix C
(Page 28 of 92)

MEASURING AND TEST EQUIPMENT LOG

Date _____

Instruction No. _____ Revision _____ Page _____

M&TE ID #	DESCRIPTION / RANGE / ACCURACY	CAL DUE DATE	*FILLED & VENTED INIT/DATE	*PLACED IN-SERVICE INIT/DATE	USED FOR QUANTITATIVE ACCEPT. CRIT. YES	USED FOR QUANTITATIVE ACCEPT. CRIT. NO	**POST-TEST CAL DATE	**POST-TEST CAL ACCEPT INIT/DATE
	Houston Scientific 1850 Series Linear Position Transducers Range 0 - 10 inches, Accuracy ± 0.15% of full scale							
	Houston Scientific 1850 Series Linear Position Transducers Range 0 - 10 inches, Accuracy ± 0.15% of full scale							
	Houston Scientific 1850 Series Linear Position Transducers Range 0 - 10 inches, Accuracy ± 0.15% of full scale							

* This item may be signed by person performing the task. This may be N/A'd if M&TE is not required to be filled and vented or placed in service.
** May be identified as not applicable (N/A) if M&TE was not used to verify/record quantitative acceptance criteria.

Appendix C
(Page 29 of 92)

MEASURING AND TEST EQUIPMENT LOG

Date _____

Instruction No. _____ Revision _____ Page _____

M&TE ID #	DESCRIPTION / RANGE / ACCURACY	CAL DUE DATE	*FILLED & VENTED INIT/DATE	*PLACED IN-SERVICE INIT/DATE	USED FOR QUANTITATIVE ACCEPT. CRIT. YES	USED FOR QUANTITATIVE ACCEPT. CRIT. NO	**POST-TEST CAL DATE	**POST-TEST CAL ACCEPT INIT/DATE
	Houston Scientific 1850 Series Linear Position Transducers Range 0 - 10 inches, Accuracy ± 0.15% of full scale							
	Houston Scientific 1850 Series Linear Position Transducers Range 0 - 10 inches, Accuracy ± 0.15% of full scale							
	Houston Scientific 1850 Series Linear Position Transducers Range 0 - 10 inches, Accuracy ± 0.15% of full scale							

* This item may be signed by person performing the task. This may be N/A'd if M&TE is not required to be filled and vented or placed in service.

** May be identified as not applicable (N/A) if M&TE was not used to verify/record quantitative acceptance criteria.

Appendix C
(Page 30 of 92)

MEASURING AND TEST EQUIPMENT LOG

Date _____

Instruction No. _____ Revision _____ Page _____

M&TE ID #	DESCRIPTION / RANGE / ACCURACY	CAL DUE DATE	*FILLED & VENTED INIT/DATE	*PLACED IN-SERVICE INIT/DATE	USED FOR QUANTITATIVE ACCEPT. CRIT. YES	USED FOR QUANTITATIVE ACCEPT. CRIT. NO	**POST-TEST CAL DATE	**POST-TEST CAL ACCEPT INIT/DATE
	Houston Scientific 1850 Series Linear Position Transducers Range 0 - 10 inches, Accuracy ± 0.15% of full scale							
	Houston Scientific 1850 Series Linear Position Transducers Range 0 - 10 inches, Accuracy ± 0.15% of full scale							
	Houston Scientific 1850 Series Linear Position Transducers Range 0 - 10 inches, Accuracy ± 0.15% of full scale							

* This item may be signed by person performing the task. This may be N/A'd if M&TE is not required to be filled and vented or placed in service.

** May be identified as not applicable (N/A) if M&TE was not used to verify/record quantitative acceptance criteria.

Appendix C
(Page 31 of 92)

MEASURING AND TEST EQUIPMENT LOG

Date _____

Instruction No. _____ Revision _____ Page _____

M&TE ID #	DESCRIPTION / RANGE / ACCURACY	CAL DUE DATE	*FILLED & VENTED INIT/DATE	*PLACED IN-SERVICE INIT/DATE	USED FOR QUANTITATIVE ACCEPT. CRIT. YES	USED FOR QUANTITATIVE ACCEPT. CRIT. NO	**POST-TEST CAL DATE	**POST-TEST CAL ACCEPT INIT/DATE
	Houston Scientific 1850 Series Linear Position Transducers Range 0 - 10 inches, Accuracy ± 0.15% of full scale							
	Houston Scientific 1850 Series Linear Position Transducers Range 0 - 10 inches, Accuracy ± 0.15% of full scale							
	Houston Scientific 1850 Series Linear Position Transducers Range 0 - 10 inches, Accuracy ± 0.15% of full scale							

* This item may be signed by person performing the task. This may be N/A'd if M&TE is not required to be filled and vented or placed in service.

** May be identified as not applicable (N/A) if M&TE was not used to verify/record quantitative acceptance criteria.

Appendix C
(Page 32 of 92)

MEASURING AND TEST EQUIPMENT LOG

Date _____

Instruction No. _____ Revision _____ Page _____

M&TE ID #	DESCRIPTION / RANGE / ACCURACY	CAL DUE DATE	*FILLED & VENTED INIT/DATE	*PLACED IN-SERVICE INIT/DATE	USED FOR QUANTITATIVE ACCEPT. CRIT. YES	USED FOR QUANTITATIVE ACCEPT. CRIT. NO	**POST-TEST CAL DATE	**POST-TEST CAL ACCEPT INIT/DATE
	Houston Scientific 1850 Series Linear Position Transducers Range 0 - 10 inches, Accuracy ± 0.15% of full scale							
	Houston Scientific 1850 Series Linear Position Transducers Range 0 - 10 inches, Accuracy ± 0.15% of full scale							
	Houston Scientific 1850 Series Linear Position Transducers Range 0 - 10 inches, Accuracy ± 0.15% of full scale							

* This item may be signed by person performing the task. This may be N/A'd if M&TE is not required to be filled and vented or placed in service.
** May be identified as not applicable (N/A) if M&TE was not used to verify/record quantitative acceptance criteria.

Appendix C
(Page 33 of 92)

MEASURING AND TEST EQUIPMENT LOG

Date _____

Instruction No. _____ Revision _____ Page _____

M&TE ID #	DESCRIPTION / RANGE / ACCURACY	CAL DUE DATE	*FILLED & VENTED INIT/DATE	*PLACED IN-SERVICE INIT/DATE	USED FOR QUANTITATIVE ACCEPT. CRIT. YES	NO	**POST-TEST CAL DATE	**POST-TEST CAL ACCEPT INIT/DATE
	Houston Scientific 1850 Series Linear Position Transducers Range 0 - 10 inches, Accuracy ± 0.15% of full scale							
	Houston Scientific 1850 Series Linear Position Transducers Range 0 - 10 inches, Accuracy ± 0.15% of full scale							
	Houston Scientific 1850 Series Linear Position Transducers Range 0 - 10 inches, Accuracy ± 0.15% of full scale							

* This item may be signed by person performing the task. This may be N/A'd if M&TE is not required to be filled and vented or placed in service.
** May be identified as not applicable (N/A) if M&TE was not used to verify/record quantitative acceptance criteria.

Appendix C
(Page 34 of 92)

MEASURING AND TEST EQUIPMENT LOG

Date _____

Instruction No. _____ Revision _____ Page _____

M&TE ID #	DESCRIPTION / RANGE / ACCURACY	CAL DUE DATE	*FILLED & VENTED INIT/DATE	*PLACED IN-SERVICE INIT/DATE	USED FOR QUANTITATIVE ACCEPT. CRIT. YES	NO	**POST-TEST CAL DATE	**POST-TEST CAL ACCEPT INIT/DATE
	Houston Scientific 1850 Series Linear Position Transducers Range 0 - 10 inches, Accuracy ± 0.15% of full scale							
	Houston Scientific 1850 Series Linear Position Transducers Range 0 - 10 inches, Accuracy ± 0.15% of full scale							
	Houston Scientific 1850 Series Linear Position Transducers Range 0 - 10 inches, Accuracy ± 0.15% of full scale							

* This item may be signed by person performing the task. This may be N/A'd if M&TE is not required to be filled and vented or placed in service.
** May be identified as not applicable (N/A) if M&TE was not used to verify/record quantitative acceptance criteria.

Appendix C
(Page 35 of 92)

MEASURING AND TEST EQUIPMENT LOG

Date _____

Instruction No. _____ Revision _____ Page _____

M&TE ID #	DESCRIPTION / RANGE / ACCURACY	CAL DUE DATE	*FILLED & VENTED INIT/DATE	*PLACED IN-SERVICE INIT/DATE	USED FOR QUANTITATIVE ACCEPT. CRIT. YES	USED FOR QUANTITATIVE ACCEPT. CRIT. NO	**POST-TEST CAL DATE	**POST-TEST CAL ACCEPT INIT/DATE
	Houston Scientific 1850 Series Linear Position Transducers Range 0 - 10 inches, Accuracy ± 0.15% of full scale							
	Houston Scientific 1850 Series Linear Position Transducers Range 0 - 10 inches, Accuracy ± 0.15% of full scale							
	Houston Scientific 1850 Series Linear Position Transducers Range 0 - 10 inches, Accuracy ± 0.15% of full scale							

* This item may be signed by person performing the task. This may be N/A'd if M&TE is not required to be filled and vented or placed in service.

** May be identified as not applicable (N/A) if M&TE was not used to verify/record quantitative acceptance criteria.

Appendix C
(Page 36 of 92)

MEASURING AND TEST EQUIPMENT LOG

Date _____

Instruction No. _____ Revision _____ Page _____

M&TE ID #	DESCRIPTION / RANGE / ACCURACY	CAL DUE DATE	*FILLED & VENTED INIT/DATE	*PLACED IN-SERVICE INIT/DATE	USED FOR QUANTITATIVE ACCEPT. CRIT. YES	USED FOR QUANTITATIVE ACCEPT. CRIT. NO	**POST-TEST CAL DATE	**POST-TEST CAL ACCEPT INIT/DATE
	Houston Scientific 1850 Series Linear Position Transducers Range 0 - 10 inches, Accuracy ± 0.15% of full scale							
	Houston Scientific 1850 Series Linear Position Transducers Range 0 - 10 inches, Accuracy ± 0.15% of full scale							
	Houston Scientific 1850 Series Linear Position Transducers Range 0 - 10 inches, Accuracy ± 0.15% of full scale							

* This item may be signed by person performing the task. This may be N/A'd if M&TE is not required to be filled and vented or placed in service.

** May be identified as not applicable (N/A) if M&TE was not used to verify/record quantitative acceptance criteria.

Appendix C
(Page 37 of 92)

MEASURING AND TEST EQUIPMENT LOG

Date _____

Instruction No. _____ Revision _____ Page _____

M&TE ID #	DESCRIPTION / RANGE / ACCURACY	CAL DUE DATE	*FILLED & VENTED INIT/DATE	*PLACED IN-SERVICE INIT/DATE	USED FOR QUANTITATIVE ACCEPT. CRIT. YES	USED FOR QUANTITATIVE ACCEPT. CRIT. NO	**POST-TEST CAL DATE	**POST-TEST CAL ACCEPT INIT/DATE
	Houston Scientific 1850 Series Linear Position Transducers Range 0 - 10 inches, Accuracy ± 0.15% of full scale							
	Houston Scientific 1850 Series Linear Position Transducers Range 0 - 10 inches, Accuracy ± 0.15% of full scale							
	Houston Scientific 1850 Series Linear Position Transducers Range 0 - 10 inches, Accuracy ± 0.15% of full scale							

* This item may be signed by person performing the task. This may be N/A'd if M&TE is not required to be filled and vented or placed in service.

** May be identified as not applicable (N/A) if M&TE was not used to verify/record quantitative acceptance criteria.

Appendix C
(Page 38 of 92)

MEASURING AND TEST EQUIPMENT LOG

Date _____

Instruction No. _____ Revision _____ Page _____

M&TE ID #	DESCRIPTION / RANGE / ACCURACY	CAL DUE DATE	*FILLED & VENTED INIT/DATE	*PLACED IN-SERVICE INIT/DATE	USED FOR QUANTITATIVE ACCEPT. CRIT. YES	USED FOR QUANTITATIVE ACCEPT. CRIT. NO	**POST-TEST CAL DATE	**POST-TEST CAL ACCEPT INIT/DATE
	Houston Scientific 1850 Series Linear Position Transducers Range 0 - 10 inches, Accuracy ± 0.15% of full scale							
	Houston Scientific 1850 Series Linear Position Transducers Range 0 - 10 inches, Accuracy ± 0.15% of full scale							
	Houston Scientific 1850 Series Linear Position Transducers Range 0 - 10 inches, Accuracy ± 0.15% of full scale							

* This item may be signed by person performing the task. This may be N/A'd if M&TE is not required to be filled and vented or placed in service.

** May be identified as not applicable (N/A) if M&TE was not used to verify/record quantitative acceptance criteria.

Appendix C
(Page 39 of 92)

MEASURING AND TEST EQUIPMENT LOG

Date _____

Instruction No. _____ Revision _____ Page _____

M&TE ID #	DESCRIPTION / RANGE / ACCURACY	CAL DUE DATE	*FILLED & VENTED INIT/DATE	*PLACED IN-SERVICE INIT/DATE	USED FOR QUANTITATIVE ACCEPT. CRIT. YES	NO	**POST-TEST CAL DATE	**POST-TEST CAL ACCEPT INIT/DATE
	Houston Scientific 1850 Series Linear Position Transducers Range 0 - 10 inches, Accuracy ± 0.15% of full scale							
	Houston Scientific 1850 Series Linear Position Transducers Range 0 - 10 inches, Accuracy ± 0.15% of full scale							
	Houston Scientific 1850 Series Linear Position Transducers Range 0 - 10 inches, Accuracy ± 0.15% of full scale							

* This item may be signed by person performing the task. This may be N/A'd if M&TE is not required to be filled and vented or placed in service.
** May be identified as not applicable (N/A) if M&TE was not used to verify/record quantitative acceptance criteria.

Appendix C
(Page 40 of 92)

MEASURING AND TEST EQUIPMENT LOG

Date _____

Instruction No. _____ Revision _____ Page _____

M&TE ID #	DESCRIPTION / RANGE / ACCURACY	CAL DUE DATE	*FILLED & VENTED INIT/DATE	*PLACED IN-SERVICE INIT/DATE	USED FOR QUANTITATIVE ACCEPT. CRIT. YES	USED FOR QUANTITATIVE ACCEPT. CRIT. NO	**POST-TEST CAL DATE	**POST-TEST CAL ACCEPT INIT/DATE
	Houston Scientific 1850 Series Linear Position Transducers Range 0 - 10 inches, Accuracy ± 0.15% of full scale							
	Houston Scientific 1850 Series Linear Position Transducers Range 0 - 10 inches, Accuracy ± 0.15% of full scale							
	Houston Scientific 1850 Series Linear Position Transducers Range 0 - 10 inches, Accuracy ± 0.15% of full scale							

* This item may be signed by person performing the task. This may be N/A'd if M&TE is not required to be filled and vented or placed in service.

** May be identified as not applicable (N/A) if M&TE was not used to verify/record quantitative acceptance criteria.

Appendix C
(Page 41 of 92)

MEASURING AND TEST EQUIPMENT LOG

Date _____

Instruction No. _____ Revision _____ Page _____

M&TE ID #	DESCRIPTION / RANGE / ACCURACY	CAL DUE DATE	*FILLED & VENTED INIT/DATE	*PLACED IN-SERVICE INIT/DATE	USED FOR QUANTITATIVE ACCEPT. CRIT. YES	NO	**POST-TEST CAL DATE	**POST-TEST CAL ACCEPT INIT/DATE
	Houston Scientific 1850 Series Linear Position Transducers Range 0 - 10 inches, Accuracy ± 0.15% of full scale							
	Houston Scientific 1850 Series Linear Position Transducers Range 0 - 10 inches, Accuracy ± 0.15% of full scale							
	Houston Scientific 1850 Series Linear Position Transducers Range 0 - 10 inches, Accuracy ± 0.15% of full scale							

* This item may be signed by person performing the task. This may be N/A'd if M&TE is not required to be filled and vented or placed in service.
** May be identified as not applicable (N/A) if M&TE was not used to verify/record quantitative acceptance criteria.

Appendix C
(Page 42 of 92)

MEASURING AND TEST EQUIPMENT LOG

Date _____

Instruction No. _____ Revision _____ Page _____

M&TE ID #	DESCRIPTION / RANGE / ACCURACY	CAL DUE DATE	*FILLED & VENTED INIT/DATE	*PLACED IN-SERVICE INIT/DATE	USED FOR QUANTITATIVE ACCEPT. CRIT. YES	NO	**POST-TEST CAL DATE	**POST-TEST CAL ACCEPT INIT/DATE
	Houston Scientific 1850 Series Linear Position Transducers Range 0 - 10 inches, Accuracy ± 0.15% of full scale							
	Houston Scientific 1850 Series Linear Position Transducers Range 0 - 10 inches, Accuracy ± 0.15% of full scale							
	Houston Scientific 1850 Series Linear Position Transducers Range 0 - 10 inches, Accuracy ± 0.15% of full scale							

* This item may be signed by person performing the task. This may be N/A'd if M&TE is not required to be filled and vented or placed in service.
** May be identified as not applicable (N/A) if M&TE was not used to verify/record quantitative acceptance criteria.

Appendix C
(Page 43 of 92)

MEASURING AND TEST EQUIPMENT LOG

Date _____

Instruction No. _____ Revision _____ Page _____

M&TE ID #	DESCRIPTION / RANGE / ACCURACY	CAL DUE DATE	*FILLED & VENTED INIT/DATE	*PLACED IN-SERVICE INIT/DATE	USED FOR QUANTITATIVE ACCEPT. CRIT. YES	USED FOR QUANTITATIVE ACCEPT. CRIT. NO	**POST-TEST CAL DATE	**POST-TEST CAL ACCEPT INIT/DATE
	Houston Scientific 1850 Series Linear Position Transducers Range 0 - 10 inches, Accuracy ± 0.15% of full scale							
	Houston Scientific 1850 Series Linear Position Transducers Range 0 - 10 inches, Accuracy ± 0.15% of full scale							
	Houston Scientific 1850 Series Linear Position Transducers Range 0 - 10 inches, Accuracy ± 0.15% of full scale							

* This item may be signed by person performing the task. This may be N/A'd if M&TE is not required to be filled and vented or placed in service.

** May be identified as not applicable (N/A) if M&TE was not used to verify/record quantitative acceptance criteria.

Appendix C
(Page 44 of 92)

MEASURING AND TEST EQUIPMENT LOG

Date _____

Instruction No. _____ Revision _____ Page _____

M&TE ID #	DESCRIPTION / RANGE / ACCURACY	CAL DUE DATE	*FILLED & VENTED INIT/DATE	*PLACED IN-SERVICE INIT/DATE	USED FOR QUANTITATIVE ACCEPT. CRIT. YES	NO	**POST-TEST CAL DATE	**POST-TEST CAL ACCEPT INIT/DATE
	Houston Scientific 1850 Series Linear Position Transducers Range 0 - 10 inches, Accuracy ± 0.15% of full scale							
	Houston Scientific 1850 Series Linear Position Transducers Range 0 - 10 inches, Accuracy ± 0.15% of full scale							
	Houston Scientific 1850 Series Linear Position Transducers Range 0 - 10 inches, Accuracy ± 0.15% of full scale							

* This item may be signed by person performing the task. This may be N/A'd if M&TE is not required to be filled and vented or placed in service.
** May be identified as not applicable (N/A) if M&TE was not used to verify/record quantitative acceptance criteria.

Appendix C
(Page 45 of 92)

MEASURING AND TEST EQUIPMENT LOG

Date _____

Instruction No. _____ Revision _____ Page _____

M&TE ID #	DESCRIPTION / RANGE / ACCURACY	CAL DUE DATE	*FILLED & VENTED INIT/DATE	*PLACED IN-SERVICE INIT/DATE	USED FOR QUANTITATIVE ACCEPT. CRIT. YES	NO	**POST-TEST CAL DATE	**POST-TEST CAL ACCEPT INIT/DATE
	Houston Scientific 1850 Series Linear Position Transducers Range 0 - 10 inches, Accuracy ± 0.15% of full scale							
	Houston Scientific 1850 Series Linear Position Transducers Range 0 - 10 inches, Accuracy ± 0.15% of full scale							
	Houston Scientific 1850 Series Linear Position Transducers Range 0 - 10 inches, Accuracy ± 0.15% of full scale							

* This item may be signed by person performing the task. This may be N/A'd if M&TE is not required to be filled and vented or placed in service.
** May be identified as not applicable (N/A) if M&TE was not used to verify/record quantitative acceptance criteria.

Appendix C
(Page 46 of 92)

MEASURING AND TEST EQUIPMENT LOG

Date _____

Instruction No. _____ Revision _____ Page _____

M&TE ID #	DESCRIPTION / RANGE / ACCURACY	CAL DUE DATE	*FILLED & VENTED INIT/DATE	*PLACED IN-SERVICE INIT/DATE	USED FOR QUANTITATIVE ACCEPT. CRIT. YES	USED FOR QUANTITATIVE ACCEPT. CRIT. NO	**POST-TEST CAL DATE	**POST-TEST CAL ACCEPT INIT/DATE
	Houston Scientific 1850 Series Linear Position Transducers Range 0 - 10 inches, Accuracy ± 0.15% of full scale							
	Houston Scientific 1850 Series Linear Position Transducers Range 0 - 10 inches, Accuracy ± 0.15% of full scale							
	Houston Scientific 1850 Series Linear Position Transducers Range 0 - 10 inches, Accuracy ± 0.15% of full scale							

* This item may be signed by person performing the task. This may be N/A'd if M&TE is not required to be filled and vented or placed in service.

** May be identified as not applicable (N/A) if M&TE was not used to verify/record quantitative acceptance criteria.

Appendix C
(Page 47 of 92)

MEASURING AND TEST EQUIPMENT LOG

Date _____

Instruction No. _____ Revision _____ Page _____

M&TE ID #	DESCRIPTION / RANGE / ACCURACY	CAL DUE DATE	*FILLED & VENTED INIT/DATE	*PLACED IN-SERVICE INIT/DATE	USED FOR QUANTITATIVE ACCEPT. CRIT. YES	USED FOR QUANTITATIVE ACCEPT. CRIT. NO	**POST-TEST CAL DATE	**POST-TEST CAL ACCEPT INIT/DATE
	Houston Scientific 1850 Series Linear Position Transducers Range 0 - 10 inches, Accuracy ± 0.15% of full scale							
	Houston Scientific 1850 Series Linear Position Transducers Range 0 - 10 inches, Accuracy ± 0.15% of full scale							
	Houston Scientific 1850 Series Linear Position Transducers Range 0 - 10 inches, Accuracy ± 0.15% of full scale							

* This item may be signed by person performing the task. This may be N/A'd if M&TE is not required to be filled and vented or placed in service.

** May be identified as not applicable (N/A) if M&TE was not used to verify/record quantitative acceptance criteria.

Appendix C
(Page 48 of 92)

MEASURING AND TEST EQUIPMENT LOG

Date _____

Instruction No. _____ Revision _____ Page _____

M&TE ID #	DESCRIPTION / RANGE / ACCURACY	CAL DUE DATE	*FILLED & VENTED INIT/DATE	*PLACED IN-SERVICE INIT/DATE	USED FOR QUANTITATIVE ACCEPT. CRIT. YES	USED FOR QUANTITATIVE ACCEPT. CRIT. NO	**POST-TEST CAL DATE	**POST-TEST CAL ACCEPT INIT/DATE
	Houston Scientific 1850 Series Linear Position Transducers Range 0 - 10 inches, Accuracy ± 0.15% of full scale							
	Houston Scientific 1850 Series Linear Position Transducers Range 0 - 10 inches, Accuracy ± 0.15% of full scale							
	Houston Scientific 1850 Series Linear Position Transducers Range 0 - 10 inches, Accuracy ± 0.15% of full scale							

* This item may be signed by person performing the task. This may be N/A'd if M&TE is not required to be filled and vented or placed in service.

** May be identified as not applicable (N/A) if M&TE was not used to verify/record quantitative acceptance criteria.

Appendix C
(Page 49 of 92)

MEASURING AND TEST EQUIPMENT LOG

Date _____

Instruction No. _____ Revision _____ Page _____

M&TE ID #	DESCRIPTION / RANGE / ACCURACY	CAL DUE DATE	*FILLED & VENTED INIT/DATE	*PLACED IN-SERVICE INIT/DATE	USED FOR QUANTITATIVE ACCEPT. CRIT. YES	NO	**POST-TEST CAL DATE	**POST-TEST CAL ACCEPT INIT/DATE
	Houston Scientific 1850 Series Linear Position Transducers Range 0 - 10 inches, Accuracy ± 0.15% of full scale							
	Houston Scientific 1850 Series Linear Position Transducers Range 0 - 10 inches, Accuracy ± 0.15% of full scale							
	Houston Scientific 1850 Series Linear Position Transducers Range 0 - 10 inches, Accuracy ± 0.15% of full scale							

* This item may be signed by person performing the task. This may be N/A'd if M&TE is not required to be filled and vented or placed in service.
** May be identified as not applicable (N/A) if M&TE was not used to verify/record quantitative acceptance criteria.

Appendix C
(Page 50 of 92)

MEASURING AND TEST EQUIPMENT LOG

Date _____

Instruction No. _____ Revision _____ Page _____

M&TE ID #	DESCRIPTION / RANGE / ACCURACY	CAL DUE DATE	*FILLED & VENTED INIT/DATE	*PLACED IN-SERVICE INIT/DATE	USED FOR QUANTITATIVE ACCEPT. CRIT. YES	USED FOR QUANTITATIVE ACCEPT. CRIT. NO	**POST-TEST CAL DATE	**POST-TEST CAL ACCEPT INIT/DATE
	Houston Scientific 1850 Series Linear Position Transducers Range 0 - 10 inches, Accuracy ± 0.15% of full scale							
	Houston Scientific 1850 Series Linear Position Transducers Range 0 - 10 inches, Accuracy ± 0.15% of full scale							
	Houston Scientific 1850 Series Linear Position Transducers Range 0 - 10 inches, Accuracy ± 0.15% of full scale							

* This item may be signed by person performing the task. This may be N/A'd if M&TE is not required to be filled and vented or placed in service.

** May be identified as not applicable (N/A) if M&TE was not used to verify/record quantitative acceptance criteria.

Appendix C
(Page 51 of 92)

MEASURING AND TEST EQUIPMENT LOG

Date _____

Instruction No. _____ Revision _____ Page _____

M&TE ID #	DESCRIPTION / RANGE / ACCURACY	CAL DUE DATE	*FILLED & VENTED INIT/DATE	*PLACED IN-SERVICE INIT/DATE	USED FOR QUANTITATIVE ACCEPT. CRIT. YES	NO	**POST-TEST CAL DATE	**POST-TEST CAL ACCEPT INIT/DATE
	Houston Scientific 1850 Series Linear Position Transducers Range 0 - 10 inches, Accuracy ± 0.15% of full scale							
	Houston Scientific 1850 Series Linear Position Transducers Range 0 - 10 inches, Accuracy ± 0.15% of full scale							
	Houston Scientific 1850 Series Linear Position Transducers Range 0 - 10 inches, Accuracy ± 0.15% of full scale							

* This item may be signed by person performing the task. This may be N/A'd if M&TE is not required to be filled and vented or placed in service.
** May be identified as not applicable (N/A) if M&TE was not used to verify/record quantitative acceptance criteria.

Appendix C
(Page 52 of 92)

MEASURING AND TEST EQUIPMENT LOG

Date _____

Instruction No. _____ Revision _____ Page _____

M&TE ID #	DESCRIPTION / RANGE / ACCURACY	CAL DUE DATE	*FILLED & VENTED INIT/DATE	*PLACED IN-SERVICE INIT/DATE	USED FOR QUANTITATIVE ACCEPT. CRIT. YES	NO	**POST-TEST CAL DATE	**POST-TEST CAL ACCEPT INIT/DATE
	Houston Scientific 1850 Series Linear Position Transducers Range 0 - 10 inches, Accuracy ± 0.15% of full scale							
	Houston Scientific 1850 Series Linear Position Transducers Range 0 - 10 inches, Accuracy ± 0.15% of full scale							
	Houston Scientific 1850 Series Linear Position Transducers Range 0 - 10 inches, Accuracy ± 0.15% of full scale							

* This item may be signed by person performing the task. This may be N/A'd if M&TE is not required to be filled and vented or placed in service.
** May be identified as not applicable (N/A) if M&TE was not used to verify/record quantitative acceptance criteria.

Appendix C
(Page 53 of 92)

MEASURING AND TEST EQUIPMENT LOG

Date _____

Instruction No. _____ Revision _____ Page _____

M&TE ID #	DESCRIPTION / RANGE / ACCURACY	CAL DUE DATE	*FILLED & VENTED INIT/DATE	*PLACED IN-SERVICE INIT/DATE	USED FOR QUANTITATIVE ACCEPT. CRIT. YES	NO	**POST-TEST CAL DATE	**POST-TEST CAL ACCEPT INIT/DATE
	Houston Scientific 1850 Series Linear Position Transducers Range 0 - 10 inches, Accuracy ± 0.15% of full scale							
	Houston Scientific 1850 Series Linear Position Transducers Range 0 - 10 inches, Accuracy ± 0.15% of full scale							
	Houston Scientific 1850 Series Linear Position Transducers Range 0 - 10 inches, Accuracy ± 0.15% of full scale							

* This item may be signed by person performing the task. This may be N/A'd if M&TE is not required to be filled and vented or placed in service.

** May be identified as not applicable (N/A) if M&TE was not used to verify/record quantitative acceptance criteria.

Appendix C
(Page 54 of 92)

MEASURING AND TEST EQUIPMENT LOG

Date _____

Instruction No. _____ Revision _____ Page _____

M&TE ID #	DESCRIPTION / RANGE / ACCURACY	CAL DUE DATE	*FILLED & VENTED INIT/DATE	*PLACED IN-SERVICE INIT/DATE	USED FOR QUANTITATIVE ACCEPT. CRIT. YES	USED FOR QUANTITATIVE ACCEPT. CRIT. NO	**POST-TEST CAL DATE	**POST-TEST CAL ACCEPT INIT/DATE
	Houston Scientific 1850 Series Linear Position Transducers Range 0 - 10 inches, Accuracy ± 0.15% of full scale							
	Houston Scientific 1850 Series Linear Position Transducers Range 0 - 10 inches, Accuracy ± 0.15% of full scale							
	Houston Scientific 1850 Series Linear Position Transducers Range 0 - 10 inches, Accuracy ± 0.15% of full scale							

* This item may be signed by person performing the task. This may be N/A'd if M&TE is not required to be filled and vented or placed in service.

** May be identified as not applicable (N/A) if M&TE was not used to verify/record quantitative acceptance criteria.

Appendix C
(Page 55 of 92)

MEASURING AND TEST EQUIPMENT LOG

Date _____

Instruction No. _____ Revision _____ Page _____

M&TE ID #	DESCRIPTION / RANGE / ACCURACY	CAL DUE DATE	*FILLED & VENTED INIT/DATE	*PLACED IN-SERVICE INIT/DATE	USED FOR QUANTITATIVE ACCEPT. CRIT. YES	USED FOR QUANTITATIVE ACCEPT. CRIT. NO	**POST-TEST CAL DATE	**POST-TEST CAL ACCEPT INIT/DATE
	Houston Scientific 1850 Series Linear Position Transducers Range 0 - 10 inches, Accuracy ± 0.15% of full scale							
	Houston Scientific 1850 Series Linear Position Transducers Range 0 - 10 inches, Accuracy ± 0.15% of full scale							
	Houston Scientific 1850 Series Linear Position Transducers Range 0 - 10 inches, Accuracy ± 0.15% of full scale							

* This item may be signed by person performing the task. This may be N/A'd if M&TE is not required to be filled and vented or placed in service.

** May be identified as not applicable (N/A) if M&TE was not used to verify/record quantitative acceptance criteria.

Appendix C
(Page 56 of 92)

MEASURING AND TEST EQUIPMENT LOG

Date _____

Instruction No. _____ Revision _____ Page _____

M&TE ID #	DESCRIPTION / RANGE / ACCURACY	CAL DUE DATE	*FILLED & VENTED INIT/DATE	*PLACED IN-SERVICE INIT/DATE	USED FOR QUANTITATIVE ACCEPT. CRIT. YES	USED FOR QUANTITATIVE ACCEPT. CRIT. NO	**POST-TEST CAL DATE	**POST-TEST CAL ACCEPT INIT/DATE
	Houston Scientific 1850 Series Linear Position Transducers Range 0 - 10 inches, Accuracy ± 0.15% of full scale							
	Houston Scientific 1850 Series Linear Position Transducers Range 0 - 10 inches, Accuracy ± 0.15% of full scale							
	Houston Scientific 1850 Series Linear Position Transducers Range 0 - 10 inches, Accuracy ± 0.15% of full scale							

* This item may be signed by person performing the task. This may be N/A'd if M&TE is not required to be filled and vented or placed in service.

** May be identified as not applicable (N/A) if M&TE was not used to verify/record quantitative acceptance criteria.

Appendix C
(Page 57 of 92)

MEASURING AND TEST EQUIPMENT LOG

Date _____

Instruction No. _____ Revision _____ Page _____

M&TE ID #	DESCRIPTION / RANGE / ACCURACY	CAL DUE DATE	*FILLED & VENTED INIT/DATE	*PLACED IN-SERVICE INIT/DATE	USED FOR QUANTITATIVE ACCEPT. CRIT. YES	USED FOR QUANTITATIVE ACCEPT. CRIT. NO	**POST-TEST CAL DATE	**POST-TEST CAL ACCEPT INIT/DATE
	Houston Scientific 1850 Series Linear Position Transducers Range 0 - 10 inches, Accuracy ± 0.15% of full scale							
	Houston Scientific 1850 Series Linear Position Transducers Range 0 - 10 inches, Accuracy ± 0.15% of full scale							
	Houston Scientific 1850 Series Linear Position Transducers Range 0 - 10 inches, Accuracy ± 0.15% of full scale							

* This item may be signed by person performing the task. This may be N/A'd if M&TE is not required to be filled and vented or placed in service.

** May be identified as not applicable (N/A) if M&TE was not used to verify/record quantitative acceptance criteria.

Appendix C
(Page 58 of 92)

MEASURING AND TEST EQUIPMENT LOG

Date _____

Instruction No. _____ Revision _____ Page _____

M&TE ID #	DESCRIPTION / RANGE / ACCURACY	CAL DUE DATE	*FILLED & VENTED INIT/DATE	*PLACED IN-SERVICE INIT/DATE	USED FOR QUANTITATIVE ACCEPT. CRIT. YES	USED FOR QUANTITATIVE ACCEPT. CRIT. NO	**POST-TEST CAL DATE	**POST-TEST CAL ACCEPT INIT/DATE
	Houston Scientific 1850 Series Linear Position Transducers Range 0 - 10 inches, Accuracy ± 0.15% of full scale							
	Houston Scientific 1850 Series Linear Position Transducers Range 0 - 10 inches, Accuracy ± 0.15% of full scale							
	Houston Scientific 1850 Series Linear Position Transducers Range 0 - 10 inches, Accuracy ± 0.15% of full scale							

* This item may be signed by person performing the task. This may be N/A'd if M&TE is not required to be filled and vented or placed in service.

** May be identified as not applicable (N/A) if M&TE was not used to verify/record quantitative acceptance criteria.

Appendix C
(Page 59 of 92)

MEASURING AND TEST EQUIPMENT LOG

Date _____

Instruction No. _____ Revision _____ Page _____

M&TE ID #	DESCRIPTION / RANGE / ACCURACY	CAL DUE DATE	*FILLED & VENTED INIT/DATE	*PLACED IN-SERVICE INIT/DATE	USED FOR QUANTITATIVE ACCEPT. CRIT. YES	USED FOR QUANTITATIVE ACCEPT. CRIT. NO	**POST-TEST CAL DATE	**POST-TEST CAL ACCEPT INIT/DATE
	Houston Scientific 1850 Series Linear Position Transducers Range 0 - 10 inches, Accuracy ± 0.15% of full scale							
	Houston Scientific 1850 Series Linear Position Transducers Range 0 - 10 inches, Accuracy ± 0.15% of full scale							
	Houston Scientific 1850 Series Linear Position Transducers Range 0 - 10 inches, Accuracy ± 0.15% of full scale							

* This item may be signed by person performing the task. This may be N/A'd if M&TE is not required to be filled and vented or placed in service.

** May be identified as not applicable (N/A) if M&TE was not used to verify/record quantitative acceptance criteria.

Appendix C
(Page 60 of 92)

MEASURING AND TEST EQUIPMENT LOG

Date _____

Instruction No. _____ Revision _____ Page _____

M&TE ID #	DESCRIPTION / RANGE / ACCURACY	CAL DUE DATE	*FILLED & VENTED INIT/DATE	*PLACED IN-SERVICE INIT/DATE	USED FOR QUANTITATIVE ACCEPT. CRIT. YES	USED FOR QUANTITATIVE ACCEPT. CRIT. NO	**POST-TEST CAL DATE	**POST-TEST CAL ACCEPT INIT/DATE
	Houston Scientific 1850 Series Linear Position Transducers Range 0 - 10 inches, Accuracy ± 0.15% of full scale							
	Houston Scientific 1850 Series Linear Position Transducers Range 0 - 10 inches, Accuracy ± 0.15% of full scale							
	Houston Scientific 1850 Series Linear Position Transducers Range 0 - 10 inches, Accuracy ± 0.15% of full scale							

* This item may be signed by person performing the task. This may be N/A'd if M&TE is not required to be filled and vented or placed in service.
** May be identified as not applicable (N/A) if M&TE was not used to verify/record quantitative acceptance criteria.

Appendix C
(Page 61 of 92)

MEASURING AND TEST EQUIPMENT LOG

Date _____

Instruction No. _____ Revision _____ Page _____

M&TE ID #	DESCRIPTION / RANGE / ACCURACY	CAL DUE DATE	*FILLED & VENTED INIT/DATE	*PLACED IN-SERVICE INIT/DATE	USED FOR QUANTITATIVE ACCEPT. CRIT. YES	USED FOR QUANTITATIVE ACCEPT. CRIT. NO	**POST-TEST CAL DATE	**POST-TEST CAL ACCEPT INIT/DATE
	Houston Scientific 1850 Series Linear Position Transducers Range 0 - 10 inches, Accuracy ± 0.15% of full scale							
	Houston Scientific 1850 Series Linear Position Transducers Range 0 - 10 inches, Accuracy ± 0.15% of full scale							
	Houston Scientific 1850 Series Linear Position Transducers Range 0 - 10 inches, Accuracy ± 0.15% of full scale							

* This item may be signed by person performing the task. This may be N/A'd if M&TE is not required to be filled and vented or placed in service.

** May be identified as not applicable (N/A) if M&TE was not used to verify/record quantitative acceptance criteria.

Appendix C
(Page 62 of 92)

MEASURING AND TEST EQUIPMENT LOG

Date _____

Instruction No. _____ Revision _____ Page _____

M&TE ID #	DESCRIPTION / RANGE / ACCURACY	CAL DUE DATE	*FILLED & VENTED INIT/DATE	*PLACED IN-SERVICE INIT/DATE	USED FOR QUANTITATIVE ACCEPT. CRIT. YES	USED FOR QUANTITATIVE ACCEPT. CRIT. NO	**POST-TEST CAL DATE	**POST-TEST CAL ACCEPT INIT/DATE
	Houston Scientific 1850 Series Linear Position Transducers Range 0 - 10 inches, Accuracy ± 0.15% of full scale							
	Houston Scientific 1850 Series Linear Position Transducers Range 0 - 10 inches, Accuracy ± 0.15% of full scale							
	Houston Scientific 1850 Series Linear Position Transducers Range 0 - 10 inches, Accuracy ± 0.15% of full scale							

* This item may be signed by person performing the task. This may be N/A'd if M&TE is not required to be filled and vented or placed in service.
** May be identified as not applicable (N/A) if M&TE was not used to verify/record quantitative acceptance criteria.

Appendix C
(Page 63 of 92)

MEASURING AND TEST EQUIPMENT LOG

Date _____

Instruction No. _____ Revision _____ Page _____

M&TE ID #	DESCRIPTION / RANGE / ACCURACY	CAL DUE DATE	*FILLED & VENTED INIT/DATE	*PLACED IN-SERVICE INIT/DATE	USED FOR QUANTITATIVE ACCEPT. CRIT. YES	USED FOR QUANTITATIVE ACCEPT. CRIT. NO	**POST-TEST CAL DATE	**POST-TEST CAL ACCEPT INIT/DATE
	Houston Scientific 1850 Series Linear Position Transducers Range 0 - 10 inches, Accuracy ± 0.15% of full scale							
	Houston Scientific 1850 Series Linear Position Transducers Range 0 - 10 inches, Accuracy ± 0.15% of full scale							
	Houston Scientific 1850 Series Linear Position Transducers Range 0 - 10 inches, Accuracy ± 0.15% of full scale							

* This item may be signed by person performing the task. This may be N/A'd if M&TE is not required to be filled and vented or placed in service.
** May be identified as not applicable (N/A) if M&TE was not used to verify/record quantitative acceptance criteria.

Appendix C
(Page 64 of 92)

MEASURING AND TEST EQUIPMENT LOG

Date _____

Instruction No. _____ Revision _____ Page _____

M&TE ID #	DESCRIPTION / RANGE / ACCURACY	CAL DUE DATE	*FILLED & VENTED INIT/DATE	*PLACED IN-SERVICE INIT/DATE	USED FOR QUANTITATIVE ACCEPT. CRIT. YES	NO	**POST-TEST CAL DATE	**POST-TEST CAL ACCEPT INIT/DATE
	Houston Scientific 1850 Series Linear Position Transducers Range 0 - 10 inches, Accuracy ± 0.15% of full scale							
	Houston Scientific 1850 Series Linear Position Transducers Range 0 - 10 inches, Accuracy ± 0.15% of full scale							
	Houston Scientific 1850 Series Linear Position Transducers Range 0 - 10 inches, Accuracy ± 0.15% of full scale							

* This item may be signed by person performing the task. This may be N/A'd if M&TE is not required to be filled and vented or placed in service.
** May be identified as not applicable (N/A) if M&TE was not used to verify/record quantitative acceptance criteria.

Appendix C
(Page 65 of 92)

MEASURING AND TEST EQUIPMENT LOG

Date _____

Instruction No. _____ Revision _____ Page _____

M&TE ID #	DESCRIPTION / RANGE / ACCURACY	CAL DUE DATE	*FILLED & VENTED INIT/DATE	*PLACED IN-SERVICE INIT/DATE	USED FOR QUANTITATIVE ACCEPT. CRIT. YES	USED FOR QUANTITATIVE ACCEPT. CRIT. NO	**POST-TEST CAL DATE	**POST-TEST CAL ACCEPT INIT/DATE
	Houston Scientific 1850 Series Linear Position Transducers Range 0 - 10 inches, Accuracy ± 0.15% of full scale							
	Houston Scientific 1850 Series Linear Position Transducers Range 0 - 10 inches, Accuracy ± 0.15% of full scale							
	Houston Scientific 1850 Series Linear Position Transducers Range 0 - 10 inches, Accuracy ± 0.15% of full scale							

* This item may be signed by person performing the task. This may be N/A'd if M&TE is not required to be filled and vented or placed in service.
** May be identified as not applicable (N/A) if M&TE was not used to verify/record quantitative acceptance criteria.

Appendix C
(Page 66 of 92)

MEASURING AND TEST EQUIPMENT LOG

Date _____

Instruction No. _____ Revision _____ Page _____

M&TE ID #	DESCRIPTION / RANGE / ACCURACY	CAL DUE DATE	*FILLED & VENTED INIT/DATE	*PLACED IN-SERVICE INIT/DATE	USED FOR QUANTITATIVE ACCEPT. CRIT. YES	USED FOR QUANTITATIVE ACCEPT. CRIT. NO	**POST-TEST CAL DATE	**POST-TEST CAL ACCEPT INIT/DATE
	Houston Scientific 1850 Series Linear Position Transducers Range 0 - 10 inches, Accuracy ± 0.15% of full scale							
	Houston Scientific 1850 Series Linear Position Transducers Range 0 - 10 inches, Accuracy ± 0.15% of full scale							
	Houston Scientific 1850 Series Linear Position Transducers Range 0 - 10 inches, Accuracy ± 0.15% of full scale							

* This item may be signed by person performing the task. This may be N/A'd if M&TE is not required to be filled and vented or placed in service.

** May be identified as not applicable (N/A) if M&TE was not used to verify/record quantitative acceptance criteria.

Appendix C
(Page 67 of 92)

MEASURING AND TEST EQUIPMENT LOG

Date _____

Instruction No. _____ Revision _____ Page _____

M&TE ID #	DESCRIPTION / RANGE / ACCURACY	CAL DUE DATE	*FILLED & VENTED INIT/DATE	*PLACED IN-SERVICE INIT/DATE	USED FOR QUANTITATIVE ACCEPT. CRIT. YES	USED FOR QUANTITATIVE ACCEPT. CRIT. NO	**POST-TEST CAL DATE	**POST-TEST CAL ACCEPT INIT/DATE
	Houston Scientific 1850 Series Linear Position Transducers Range 0 - 10 inches, Accuracy ± 0.15% of full scale							
	Houston Scientific 1850 Series Linear Position Transducers Range 0 - 10 inches, Accuracy ± 0.15% of full scale							
	Houston Scientific 1850 Series Linear Position Transducers Range 0 - 10 inches, Accuracy ± 0.15% of full scale							

* This item may be signed by person performing the task. This may be N/A'd if M&TE is not required to be filled and vented or placed in service.

** May be identified as not applicable (N/A) if M&TE was not used to verify/record quantitative acceptance criteria.

Appendix C
(Page 68 of 92)

MEASURING AND TEST EQUIPMENT LOG

Date _____

Instruction No. _____ Revision _____ Page _____

M&TE ID #	DESCRIPTION / RANGE / ACCURACY	CAL DUE DATE	*FILLED & VENTED INIT/DATE	*PLACED IN-SERVICE INIT/DATE	USED FOR QUANTITATIVE ACCEPT. CRIT. YES	USED FOR QUANTITATIVE ACCEPT. CRIT. NO	**POST-TEST CAL DATE	**POST-TEST CAL ACCEPT INIT/DATE
	Houston Scientific 1850 Series Linear Position Transducers Range 0 - 10 inches, Accuracy ± 0.15% of full scale							
	Houston Scientific 1850 Series Linear Position Transducers Range 0 - 10 inches, Accuracy ± 0.15% of full scale							
	Houston Scientific 1850 Series Linear Position Transducers Range 0 - 10 inches, Accuracy ± 0.15% of full scale							

* This item may be signed by person performing the task. This may be N/A'd if M&TE is not required to be filled and vented or placed in service.

** May be identified as not applicable (N/A) if M&TE was not used to verify/record quantitative acceptance criteria.

Appendix C
(Page 69 of 92)

MEASURING AND TEST EQUIPMENT LOG

Date _____

Instruction No. _____ Revision _____ Page _____

M&TE ID #	DESCRIPTION / RANGE / ACCURACY	CAL DUE DATE	*FILLED & VENTED INIT/DATE	*PLACED IN-SERVICE INIT/DATE	USED FOR QUANTITATIVE ACCEPT. CRIT. YES	NO	**POST-TEST CAL DATE	**POST-TEST CAL ACCEPT INIT/DATE
	Houston Scientific 1850 Series Linear Position Transducers Range 0 - 10 inches, Accuracy ± 0.15% of full scale							
	Houston Scientific 1850 Series Linear Position Transducers Range 0 - 10 inches, Accuracy ± 0.15% of full scale							
	Houston Scientific 1850 Series Linear Position Transducers Range 0 - 10 inches, Accuracy ± 0.15% of full scale							

* This item may be signed by person performing the task. This may be N/A'd if M&TE is not required to be filled and vented or placed in service.
** May be identified as not applicable (N/A) if M&TE was not used to verify/record quantitative acceptance criteria.

Appendix C
(Page 70 of 92)

MEASURING AND TEST EQUIPMENT LOG

Date _____

Instruction No. _____ Revision _____ Page _____

M&TE ID #	DESCRIPTION / RANGE / ACCURACY	CAL DUE DATE	*FILLED & VENTED INIT/DATE	*PLACED IN-SERVICE INIT/DATE	USED FOR QUANTITATIVE ACCEPT. CRIT. YES	USED FOR QUANTITATIVE ACCEPT. CRIT. NO	**POST-TEST CAL DATE	**POST-TEST CAL ACCEPT INIT/DATE
	Houston Scientific 1850 Series Linear Position Transducers Range 0 - 10 inches, Accuracy ± 0.15% of full scale							
	Houston Scientific 1850 Series Linear Position Transducers Range 0 - 10 inches, Accuracy ± 0.15% of full scale							
	Houston Scientific 1850 Series Linear Position Transducers Range 0 - 10 inches, Accuracy ± 0.15% of full scale							

* This item may be signed by person performing the task. This may be N/A'd if M&TE is not required to be filled and vented or placed in service.
** May be identified as not applicable (N/A) if M&TE was not used to verify/record quantitative acceptance criteria.

Appendix C
(Page 71 of 92)

MEASURING AND TEST EQUIPMENT LOG

Date _____

Instruction No. _____ Revision _____ Page _____

M&TE ID #	DESCRIPTION / RANGE / ACCURACY	CAL DUE DATE	*FILLED & VENTED INIT/DATE	*PLACED IN-SERVICE INIT/DATE	USED FOR QUANTITATIVE ACCEPT. CRIT. YES	USED FOR QUANTITATIVE ACCEPT. CRIT. NO	**POST-TEST CAL DATE	**POST-TEST CAL ACCEPT INIT/DATE
	Houston Scientific 1850 Series Linear Position Transducers Range 0 - 10 inches, Accuracy ± 0.15% of full scale							
	Houston Scientific 1850 Series Linear Position Transducers Range 0 - 10 inches, Accuracy ± 0.15% of full scale							
	Houston Scientific 1850 Series Linear Position Transducers Range 0 - 10 inches, Accuracy ± 0.15% of full scale							

* This item may be signed by person performing the task. This may be N/A'd if M&TE is not required to be filled and vented or placed in service.
** May be identified as not applicable (N/A) if M&TE was not used to verify/record quantitative acceptance criteria.

Appendix C
(Page 72 of 92)

MEASURING AND TEST EQUIPMENT LOG

Date _____

Instruction No. _____ Revision _____ Page _____

M&TE ID #	DESCRIPTION / RANGE / ACCURACY	CAL DUE DATE	*FILLED & VENTED INIT/DATE	*PLACED IN-SERVICE INIT/DATE	USED FOR QUANTITATIVE ACCEPT. CRIT. YES	USED FOR QUANTITATIVE ACCEPT. CRIT. NO	**POST-TEST CAL DATE	**POST-TEST CAL ACCEPT INIT/DATE
	Houston Scientific 1850 Series Linear Position Transducers Range 0 - 10 inches, Accuracy ± 0.15% of full scale							
	Houston Scientific 1850 Series Linear Position Transducers Range 0 - 10 inches, Accuracy ± 0.15% of full scale							
	Houston Scientific 1850 Series Linear Position Transducers Range 0 - 10 inches, Accuracy ± 0.15% of full scale							

* This item may be signed by person performing the task. This may be N/A'd if M&TE is not required to be filled and vented or placed in service.

** May be identified as not applicable (N/A) if M&TE was not used to verify/record quantitative acceptance criteria.

Appendix C
(Page 73 of 92)

MEASURING AND TEST EQUIPMENT LOG

Date _____

Instruction No. _____ Revision _____ Page _____

M&TE ID #	DESCRIPTION / RANGE / ACCURACY	CAL DUE DATE	*FILLED & VENTED INIT/DATE	*PLACED IN-SERVICE INIT/DATE	USED FOR QUANTITATIVE ACCEPT. CRIT. YES	NO	**POST-TEST CAL DATE	**POST-TEST CAL ACCEPT INIT/DATE
	Houston Scientific 1850 Series Linear Position Transducers Range 0 - 10 inches, Accuracy ± 0.15% of full scale							
	Houston Scientific 1850 Series Linear Position Transducers Range 0 - 10 inches, Accuracy ± 0.15% of full scale							
	Houston Scientific 1850 Series Linear Position Transducers Range 0 - 10 inches, Accuracy ± 0.15% of full scale							

* This item may be signed by person performing the task. This may be N/A'd if M&TE is not required to be filled and vented or placed in service.

** May be identified as not applicable (N/A) if M&TE was not used to verify/record quantitative acceptance criteria.

Appendix C
(Page 74 of 92)

MEASURING AND TEST EQUIPMENT LOG

Date _____

Instruction No. _____ Revision _____ Page _____

M&TE ID #	DESCRIPTION / RANGE / ACCURACY	CAL DUE DATE	*FILLED & VENTED INIT/DATE	*PLACED IN-SERVICE INIT/DATE	USED FOR QUANTITATIVE ACCEPT. CRIT. YES	USED FOR QUANTITATIVE ACCEPT. CRIT. NO	**POST-TEST CAL DATE	**POST-TEST CAL ACCEPT INIT/DATE
	Houston Scientific 1850 Series Linear Position Transducers Range 0 - 10 inches, Accuracy ± 0.15% of full scale							
	Houston Scientific 1850 Series Linear Position Transducers Range 0 - 10 inches, Accuracy ± 0.15% of full scale							
	Houston Scientific 1850 Series Linear Position Transducers Range 0 - 10 inches, Accuracy ± 0.15% of full scale							

* This item may be signed by person performing the task. This may be N/A'd if M&TE is not required to be filled and vented or placed in service.
** May be identified as not applicable (N/A) if M&TE was not used to verify/record quantitative acceptance criteria.

Appendix C
(Page 75 of 92)

MEASURING AND TEST EQUIPMENT LOG

Date _____

Instruction No. _____ Revision _____ Page _____

M&TE ID #	DESCRIPTION / RANGE / ACCURACY	CAL DUE DATE	*FILLED & VENTED INIT/DATE	*PLACED IN-SERVICE INIT/DATE	USED FOR QUANTITATIVE ACCEPT. CRIT. YES	USED FOR QUANTITATIVE ACCEPT. CRIT. NO	**POST-TEST CAL DATE	**POST-TEST CAL ACCEPT INIT/DATE
	Houston Scientific 1850 Series Linear Position Transducers Range 0 - 10 inches, Accuracy ± 0.15% of full scale							
	Houston Scientific 1850 Series Linear Position Transducers Range 0 - 10 inches, Accuracy ± 0.15% of full scale							
	Houston Scientific 1850 Series Linear Position Transducers Range 0 - 10 inches, Accuracy ± 0.15% of full scale							

* This item may be signed by person performing the task. This may be N/A'd if M&TE is not required to be filled and vented or placed in service.

** May be identified as not applicable (N/A) if M&TE was not used to verify/record quantitative acceptance criteria.

Appendix C
(Page 76 of 92)

MEASURING AND TEST EQUIPMENT LOG

Date _____

Instruction No. _____ Revision _____ Page _____

M&TE ID #	DESCRIPTION / RANGE / ACCURACY	CAL DUE DATE	*FILLED & VENTED INIT/DATE	*PLACED IN-SERVICE INIT/DATE	USED FOR QUANTITATIVE ACCEPT. CRIT. YES	NO	**POST-TEST CAL DATE	**POST-TEST CAL ACCEPT INIT/DATE
	Houston Scientific 1850 Series Linear Position Transducers Range 0 - 10 inches, Accuracy ± 0.15% of full scale							
	Houston Scientific 1850 Series Linear Position Transducers Range 0 - 10 inches, Accuracy ± 0.15% of full scale							
	Houston Scientific 1850 Series Linear Position Transducers Range 0 - 10 inches, Accuracy ± 0.15% of full scale							

* This item may be signed by person performing the task. This may be N/A'd if M&TE is not required to be filled and vented or placed in service.
** May be identified as not applicable (N/A) if M&TE was not used to verify/record quantitative acceptance criteria.

Appendix C
(Page 77 of 92)

MEASURING AND TEST EQUIPMENT LOG

Date _____

Instruction No. _____ Revision _____ Page _____

M&TE ID #	DESCRIPTION / RANGE / ACCURACY	CAL DUE DATE	*FILLED & VENTED INIT/DATE	*PLACED IN-SERVICE INIT/DATE	USED FOR QUANTITATIVE ACCEPT. CRIT. YES	NO	**POST-TEST CAL DATE	**POST-TEST CAL ACCEPT INIT/DATE
	Houston Scientific 1850 Series Linear Position Transducers Range 0 - 10 inches, Accuracy ± 0.15% of full scale							
	Houston Scientific 1850 Series Linear Position Transducers Range 0 - 10 inches, Accuracy ± 0.15% of full scale							
	Houston Scientific 1850 Series Linear Position Transducers Range 0 - 10 inches, Accuracy ± 0.15% of full scale							

* This item may be signed by person performing the task. This may be N/A'd if M&TE is not required to be filled and vented or placed in service.
** May be identified as not applicable (N/A) if M&TE was not used to verify/record quantitative acceptance criteria.

Appendix C
(Page 78 of 92)

MEASURING AND TEST EQUIPMENT LOG

Date _____

Instruction No. _____ Revision _____ Page _____

M&TE ID #	DESCRIPTION / RANGE / ACCURACY	CAL DUE DATE	*FILLED & VENTED INIT/DATE	*PLACED IN-SERVICE INIT/DATE	USED FOR QUANTITATIVE ACCEPT. CRIT. YES	USED FOR QUANTITATIVE ACCEPT. CRIT. NO	**POST-TEST CAL DATE	**POST-TEST CAL ACCEPT INIT/DATE
	Houston Scientific 1850 Series Linear Position Transducers Range 0 - 10 inches, Accuracy ± 0.15% of full scale							
	Houston Scientific 1850 Series Linear Position Transducers Range 0 - 10 inches, Accuracy ± 0.15% of full scale							
	Houston Scientific 1850 Series Linear Position Transducers Range 0 - 10 inches, Accuracy ± 0.15% of full scale							

* This item may be signed by person performing the task. This may be N/A'd if M&TE is not required to be filled and vented or placed in service.

** May be identified as not applicable (N/A) if M&TE was not used to verify/record quantitative acceptance criteria.

Appendix C
(Page 79 of 92)

MEASURING AND TEST EQUIPMENT LOG

Date _____

Instruction No. _____ Revision _____ Page _____

M&TE ID #	DESCRIPTION / RANGE / ACCURACY	CAL DUE DATE	*FILLED & VENTED INIT/DATE	*PLACED IN-SERVICE INIT/DATE	USED FOR QUANTITATIVE ACCEPT. CRIT. YES	USED FOR QUANTITATIVE ACCEPT. CRIT. NO	**POST-TEST CAL DATE	**POST-TEST CAL ACCEPT INIT/DATE
	Houston Scientific 1850 Series Linear Position Transducers Range 0 - 10 inches, Accuracy ± 0.15% of full scale							

* This item may be signed by person performing the task. This may be N/A'd if M&TE is not required to be filled and vented or placed in service.
** May be identified as not applicable (N/A) if M&TE was not used to verify/record quantitative acceptance criteria.

Appendix C
(Page 80 of 92)

MEASURING AND TEST EQUIPMENT LOG

Date _____

Instruction No. _____ Revision _____ Page _____

M&TE ID #	DESCRIPTION / RANGE / ACCURACY	CAL DUE DATE	*FILLED & VENTED INIT/DATE	*PLACED IN-SERVICE INIT/DATE	USED FOR QUANTITATIVE ACCEPT. CRIT. YES	USED FOR QUANTITATIVE ACCEPT. CRIT. NO	**POST-TEST CAL DATE	**POST-TEST CAL ACCEPT INIT/DATE
	UniMeasure PA-20-TS Linear Position Transducers Range 0 - 20 inches, Accuracy ± 0.15% of full scale							
	UniMeasure PA-20-TS Linear Position Transducers Range 0 - 20 inches, Accuracy ± 0.15% of full scale							
	UniMeasure PA-20-TS Linear Position Transducers Range 0 - 20 inches, Accuracy ± 0.15% of full scale							

* This item may be signed by person performing the task. This may be N/A'd if M&TE is not required to be filled and vented or placed in service.

** May be identified as not applicable (N/A) if M&TE was not used to verify/record quantitative acceptance criteria.

Appendix C
(Page 81 of 92)

MEASURING AND TEST EQUIPMENT LOG

Date _____

Instruction No. _____ Revision _____ Page _____

M&TE ID #	DESCRIPTION / RANGE / ACCURACY	CAL DUE DATE	*FILLED & VENTED INIT/DATE	*PLACED IN-SERVICE INIT/DATE	USED FOR QUANTITATIVE ACCEPT. CRIT. YES	USED FOR QUANTITATIVE ACCEPT. CRIT. NO	**POST-TEST CAL DATE	**POST-TEST CAL ACCEPT INIT/DATE
	UniMeasure PA-20-TS Linear Position Transducers Range 0 - 20 inches, Accuracy ± 0.15% of full scale							
	UniMeasure PA-20-TS Linear Position Transducers Range 0 - 20 inches, Accuracy ± 0.15% of full scale							
	UniMeasure PA-20-TS Linear Position Transducers Range 0 - 20 inches, Accuracy ± 0.15% of full scale							

* This item may be signed by person performing the task. This may be N/A'd if M&TE is not required to be filled and vented or placed in service.

** May be identified as not applicable (N/A) if M&TE was not used to verify/record quantitative acceptance criteria.

Appendix C
(Page 82 of 92)

MEASURING AND TEST EQUIPMENT LOG

Date _____

Instruction No. _____ Revision _____ Page _____

M&TE ID #	DESCRIPTION / RANGE / ACCURACY	CAL DUE DATE	*FILLED & VENTED INIT/DATE	*PLACED IN-SERVICE INIT/DATE	USED FOR QUANTITATIVE ACCEPT. CRIT. YES	USED FOR QUANTITATIVE ACCEPT. CRIT. NO	**POST-TEST CAL DATE	**POST-TEST CAL ACCEPT INIT/DATE
	UniMeasure PA-20-TS Linear Position Transducers Range 0 - 20 inches, Accuracy ± 0.15% of full scale							
	UniMeasure PA-20-TS Linear Position Transducers Range 0 - 20 inches, Accuracy ± 0.15% of full scale							
	UniMeasure PA-20-TS Linear Position Transducers Range 0 - 20 inches, Accuracy ± 0.15% of full scale							

* This item may be signed by person performing the task. This may be N/A'd if M&TE is not required to be filled and vented or placed in service.
** May be identified as not applicable (N/A) if M&TE was not used to verify/record quantitative acceptance criteria.

Appendix C
(Page 83 of 92)

MEASURING AND TEST EQUIPMENT LOG

Date _____

Instruction No. _____ Revision _____ Page _____

M&TE ID #	DESCRIPTION / RANGE / ACCURACY	CAL DUE DATE	*FILLED & VENTED INIT/DATE	*PLACED IN-SERVICE INIT/DATE	USED FOR QUANTITATIVE ACCEPT. CRIT. YES	USED FOR QUANTITATIVE ACCEPT. CRIT. NO	**POST-TEST CAL DATE	**POST-TEST CAL ACCEPT INIT/DATE
	UniMeasure PA-20-TS Linear Position Transducers Range 0 - 20 inches, Accuracy ± 0.15% of full scale							
	UniMeasure PA-20-TS Linear Position Transducers Range 0 - 20 inches, Accuracy ± 0.15% of full scale							
	UniMeasure PA-20-TS Linear Position Transducers Range 0 - 20 inches, Accuracy ± 0.15% of full scale							

* This item may be signed by person performing the task. This may be N/A'd if M&TE is not required to be filled and vented or placed in service.
** May be identified as not applicable (N/A) if M&TE was not used to verify/record quantitative acceptance criteria.

Appendix C
(Page 84 of 92)

MEASURING AND TEST EQUIPMENT LOG

Date _____

Instruction No. _____ Revision _____ Page _____

M&TE ID #	DESCRIPTION / RANGE / ACCURACY	CAL DUE DATE	*FILLED & VENTED INIT/DATE	*PLACED IN-SERVICE INIT/DATE	USED FOR QUANTITATIVE ACCEPT. CRIT. YES	NO	**POST-TEST CAL DATE	**POST-TEST CAL ACCEPT INIT/DATE
	UniMeasure PA-20-TS Linear Position Transducers Range 0 - 20 inches, Accuracy ± 0.15% of full scale							

* This item may be signed by person performing the task. This may be N/A'd if M&TE is not required to be filled and vented or placed in service.
** May be identified as not applicable (N/A) if M&TE was not used to verify/record quantitative acceptance criteria.

Appendix C
(Page 85 of 92)

MEASURING AND TEST EQUIPMENT LOG

Date _____

Instruction No. _____ Revision _____ Page _____

M&TE ID #	DESCRIPTION	CAL DUE DATE	*FILLED & VENTED	*PLACED IN-SERVICE	USED FOR QUANTITATIVE ACCEPT. CRIT.		**POST-TEST CAL DATE	**POST-TEST CAL ACCEPT
	RANGE / ACCURACY		INIT/DATE	INIT/DATE	YES	NO		INIT/DATE
	DIGITAL THERMOMETERS FLUKE MODEL 52							
	32°F - 650°F, ± 10°F							
	DIGITAL THERMOMETERS FLUKE MODEL 52							
	32°F - 650°F, ± 10°F							
	DIGITAL THERMOMETERS FLUKE MODEL 52							
	32°F - 650°F, ± 10°F							
	DIGITAL THERMOMETERS FLUKE MODEL 52							
	32°F - 650°F, ± 10°F							

* This item may be signed by person performing the task. This may be N/A'd if M&TE is not required to be filled and vented or placed in service.
** May be identified as not applicable (N/A) if M&TE was not used to verify/record quantitative acceptance criteria.

Appendix C
(Page 86 of 92)

MEASURING AND TEST EQUIPMENT LOG

Date _____

Instruction No. _____ Revision _____ Page _____

M&TE ID #	DESCRIPTION	CAL DUE DATE	*FILLED & VENTED	*PLACED IN-SERVICE	USED FOR QUANTITATIVE ACCEPT. CRIT.		**POST-TEST CAL DATE	**POST-TEST CAL ACCEPT
	RANGE / ACCURACY		INIT/DATE	INIT/DATE	YES	NO		INIT/DATE
	DIGITAL THERMOMETERS FLUKE MODEL 52							
	32°F - 650°F, ± 10°F							
	DIGITAL THERMOMETERS FLUKE MODEL 52							
	32°F - 650°F, ± 10°F							
	DIGITAL THERMOMETERS FLUKE MODEL 52							
	32°F - 650°F, ± 10°F							
	DIGITAL THERMOMETERS FLUKE MODEL 52							
	32°F - 650°F, ± 10°F							

* This item may be signed by person performing the task. This may be N/A'd if M&TE is not required to be filled and vented or placed in service.
** May be identified as not applicable (N/A) if M&TE was not used to verify/record quantitative acceptance criteria.

Appendix C
(Page 87 of 92)

MEASURING AND TEST EQUIPMENT LOG

Date _____

Instruction No. _____ Revision _____ Page _____

M&TE ID #	DESCRIPTION	CAL DUE DATE	*FILLED & VENTED	*PLACED IN-SERVICE	USED FOR QUANTITATIVE ACCEPT. CRIT.		**POST-TEST CAL DATE	**POST-TEST CAL ACCEPT
	RANGE / ACCURACY		INIT/DATE	INIT/DATE	YES	NO		INIT/DATE
	DIGITAL THERMOMETERS FLUKE MODEL 52							
	32°F - 650°F, ± 10°F							
	DIGITAL THERMOMETERS FLUKE MODEL 52							
	32°F - 650°F, ± 10°F							
	DIGITAL THERMOMETERS FLUKE MODEL 52							
	32°F - 650°F, ± 10°F							
	DIGITAL THERMOMETERS FLUKE MODEL 52							
	32°F - 650°F, ± 10°F							

* This item may be signed by person performing the task. This may be N/A'd if M&TE is not required to be filled and vented or placed in service.
** May be identified as not applicable (N/A) if M&TE was not used to verify/record quantitative acceptance criteria.

Appendix C
(Page 88 of 92)

MEASURING AND TEST EQUIPMENT LOG

Date _____

Instruction No. _____ Revision _____ Page _____

M&TE ID #	DESCRIPTION / RANGE / ACCURACY	CAL DUE DATE	*FILLED & VENTED INIT/DATE	*PLACED IN-SERVICE INIT/DATE	USED FOR QUANTITATIVE ACCEPT. CRIT. YES	NO	**POST-TEST CAL DATE	**POST-TEST CAL ACCEPT INIT/DATE
	DIGITAL THERMOMETERS FLUKE MODEL 52							
	32°F - 650°F, ± 10°F							
	DIGITAL THERMOMETERS FLUKE MODEL 52							
	32°F - 650°F, ± 10°F							
	DIGITAL THERMOMETERS FLUKE MODEL 52							
	32°F - 650°F, ± 10°F							
	DIGITAL THERMOMETERS FLUKE MODEL 52							
	32°F - 650°F, ± 10°F							

* This item may be signed by person performing the task. This may be N/A'd if M&TE is not required to be filled and vented or placed in service.
** May be identified as not applicable (N/A) if M&TE was not used to verify/record quantitative acceptance criteria.

Appendix C
(Page 89 of 92)

MEASURING AND TEST EQUIPMENT LOG

Date _____

Instruction No. _____ Revision _____ Page _____

M&TE ID #	DESCRIPTION	CAL DUE DATE	*FILLED & VENTED	*PLACED IN-SERVICE	USED FOR QUANTITATIVE ACCEPT. CRIT.		**POST-TEST CAL DATE	**POST-TEST CAL ACCEPT
	RANGE / ACCURACY		INIT/DATE	INIT/DATE	YES	NO		INIT/DATE
	DIGITAL THERMOMETERS FLUKE MODEL 52							
	32°F - 650°F, ± 10°F							
	DIGITAL THERMOMETERS FLUKE MODEL 52							
	32°F - 650°F, ± 10°F							
	DIGITAL THERMOMETERS FLUKE MODEL 52							
	32°F - 650°F, ± 10°F							
	DIGITAL THERMOMETERS FLUKE MODEL 52							
	32°F - 650°F, ± 10°F							

* This item may be signed by person performing the task. This may be N/A'd if M&TE is not required to be filled and vented or placed in service.
** May be identified as not applicable (N/A) if M&TE was not used to verify/record quantitative acceptance criteria.

Appendix C
(Page 90 of 92)

MEASURING AND TEST EQUIPMENT LOG

Date _____

Instruction No. _____ Revision _____ Page _____

M&TE ID #	DESCRIPTION	CAL DUE DATE	*FILLED & VENTED	*PLACED IN-SERVICE	USED FOR QUANTITATIVE ACCEPT. CRIT.		**POST-TEST CAL DATE	**POST-TEST CAL ACCEPT
	RANGE / ACCURACY		INIT/DATE	INIT/DATE	YES	NO		INIT/DATE
	DIGITAL THERMOMETERS FLUKE MODEL 52							
	32°F - 650°F, ± 10°F							
	DIGITAL THERMOMETERS FLUKE MODEL 52							
	32°F - 650°F, ± 10°F							
	DIGITAL THERMOMETERS FLUKE MODEL 52							
	32°F - 650°F, ± 10°F							
	DIGITAL THERMOMETERS FLUKE MODEL 52							
	32°F - 650°F, ± 10°F							

* This item may be signed by person performing the task. This may be N/A'd if M&TE is not required to be filled and vented or placed in service.
** May be identified as not applicable (N/A) if M&TE was not used to verify/record quantitative acceptance criteria.

Appendix C
(Page 91 of 92)

MEASURING AND TEST EQUIPMENT LOG

Date _____

Instruction No. _____ Revision _____ Page _____

M&TE ID #	DESCRIPTION	CAL DUE DATE	*FILLED & VENTED	*PLACED IN-SERVICE	USED FOR QUANTITATIVE ACCEPT. CRIT.		**POST-TEST CAL DATE	**POST-TEST CAL ACCEPT
	RANGE / ACCURACY		INIT/DATE	INIT/DATE	YES	NO		INIT/DATE
	DIGITAL THERMOMETERS FLUKE MODEL 52							
	32°F - 650°F, ± 10°F							
	DIGITAL THERMOMETERS FLUKE MODEL 52							
	32°F - 650°F, ± 10°F							
	DIGITAL THERMOMETERS FLUKE MODEL 52							
	32°F - 650°F, ± 10°F							
	DIGITAL THERMOMETERS FLUKE MODEL 52							
	32°F - 650°F, ± 10°F							

* This item may be signed by person performing the task. This may be N/A'd if M&TE is not required to be filled and vented or placed in service.
** May be identified as not applicable (N/A) if M&TE was not used to verify/record quantitative acceptance criteria.

Appendix C
(Page 92 of 92)

MEASURING AND TEST EQUIPMENT LOG

Date _____

Instruction No. _____ Revision _____ Page _____

M&TE ID #	DESCRIPTION / RANGE / ACCURACY	CAL DUE DATE	*FILLED & VENTED INIT/DATE	*PLACED IN-SERVICE INIT/DATE	USED FOR QUANTITATIVE ACCEPT. CRIT. YES	USED FOR QUANTITATIVE ACCEPT. CRIT. NO	**POST-TEST CAL DATE	**POST-TEST CAL ACCEPT INIT/DATE
	DIGITAL THERMOMETERS FLUKE MODEL 52 32°F - 650°F, ± 10°F							
	DIGITAL THERMOMETERS FLUKE MODEL 52 32°F - 650°F, ± 10°F							

* This item may be signed by person performing the task. This may be N/A'd if M&TE is not required to be filled and vented or placed in service.
** May be identified as not applicable (N/A) if M&TE was not used to verify/record quantitative acceptance criteria.

Appendix D
(Page 1 of 6)

GUIDELINES FOR VISUAL INSPECTION OF PIPING AND COMPONENTS DURING HOT FUNCTIONAL TESTING

Date _____

1.0 PURPOSE

The purpose of this attachment is to provide basic guidelines for visual inspection of piping that is expected to attain temperatures of 200°F or higher during Hot Functional Testing.

2.0 GENERAL GUIDELINES

2.1 The following Tables are a list of all Isometric Drawings for the systems to be walked down at the various Temperature Plateaus.

SYSTEM 001			
ISO DWG NO	**ISO DWG NO**	**ISO DWG NO**	**ISO DWG NO**
47W400-200	2-47W400-207	2-47W400-221A	2-47W400-223A
47W400-201	2-47W400-220	2-47W400-222	2-47W400-230
47W400-202	2-47W400-220A	2-47W400-222A	2-47W400-233
47W400-203	2-47W400-221	2-47W400-223	

SYSTEM 003			
ISO DWG NO	**ISO DWG NO**	**ISO DWG NO**	**ISO DWG NO**
2-47W401-159	2-47W401-223	2-47W427-209	2-47W427-230
2-47W401-160	2-47W401-224	2-47W427-213	2-47W427-231
2-47W401-161	2-47W401-225	2-47W427-216	2-47W427-233
2-47W401-162	2-47W401-226	2-47W427-216A	2-47W427-234
2-47W401-164	2-47W401-227	2-47W427-219	2-47W427-246
2-47W401-212	2-47W401-230	2-47W427-219A	
2-47W401-217	2-47W427-208	2-47W427-224	

SYSTEM 015			
ISO DWG NO	**ISO DWG NO**	**ISO DWG NO**	**ISO DWG NO**
2-47W400-212	2-47W400-228	2-47W400-229	2-47W400-232
2-47W400-227	2-47W400-228A	2-47W400-231	

Appendix D
(Page 2 of 6)

GUIDELINES FOR VISUAL INSPECTION OF PIPING AND COMPONENTS DURING HOT FUNCTIONAL TESTING

Date _____

2.1 The following Tables are a list of all Isometric Drawings for the systems to be walked down at the various Temperature Plateaus. (continued)

SYSTEM 062			
ISO DWG NO	**ISO DWG NO**	**ISO DWG NO**	**ISO DWG NO**
2-47W406-305	2-47W406-321	2-47W406-348A	2-47W406-358
2-47W406-308	2-47W406-321A	2-47W406-349	2-47W406-361
2-47W406-313	2-47W406-321B	2-47W406-349A	2-47W406-364
2-47W406-313A	2-47W406-321C	2-47W406-352	2-47W406-365
2-47W406-314	2-47W406-332	2-47W406-353	2-47W406-367
2-47W406-320	2-47W406-340	2-47W406-354	2-47W406-371
2-47W406-320A	2-47W406-342	2-47W406-355	
2-47W406-320B	2-47W406-348	2-47W406-356	

SYSTEM 063			
ISO DWG NO	**ISO DWG NO**	**ISO DWG NO**	**ISO DWG NO**
2-47W435-212	2-47W435-262	2-47W435-267A	2-47W435-279
2-47W435-214	2-47W435-263	2-47W435-267B	2-47W435-283
2-47W435-215	2-47W435-264	2-47W435-274	2-47W435-284
2-47W435-218	2-47W435-264A	2-47W435-275	2-47W435-284A
2-47W435-253	2-47W435-265	2-47W435-276	
2-47W435-255	2-47W435-265A	2-47W435-277	
2-47W435-256	2-47W435-267	2-47W435-278	

SYSTEM 068			
ISO DWG NO	**ISO DWG NO**	**ISO DWG NO**	**ISO DWG NO**
2-47W465-206	2-47W465-212	2-47W465-224	2-47W465-246
2-47W465-210	2-47W465-218	2-47W465-235	
2-47W465-211	2-47W465-221	2-47W465-236	

Appendix D
(Page 3 of 6)

GUIDELINES FOR VISUAL INSPECTION OF PIPING AND COMPONENTS DURING HOT FUNCTIONAL TESTING

Date _____

2.1 The following Tables are a list of all Isometric Drawings for the systems to be walked down at the various Temperature Plateaus. (continued)

SYSTEM 074			
ISO DWG NO	**ISO DWG NO**	**ISO DWG NO**	**ISO DWG NO**
2-47W432-205	2-47W432-208A	2-47W432-211	2-47W432-218
2-47W432-206	2-47W432-209	2-47W432-214	
2-47W432-208	2-47W432-210	2-47W432-216	

All problems found during the walk downs will be reported on an Appendix E form and turned in to the Test Director for disposition. There will be no change in Plateau Temperature until all problems have been resolved or evaluated for a rise to a new plateau.

2.2 Piping Visual Inspection shall include:

[1] Prior to plant heat up, piping shall be visually inspected to:

A. Allow the walk down team to become familiar with the installed layout and

B. Identify possible problem areas.

[2] During the ambient walk down, areas where insulation interferes with visual inspection will be noted and reported. Certain plant areas shall also be noted by the walk down team where piping is congested and where only brief access will be permitted during system heat up, specifically near the pumps and pump columns.

[3] During the test, the piping shall be walked down to assure that no obstructions exist that would interfere with pipe expansion (e.g., external objects such as scaffolding and ladders, etc.)

[4] The piping should be free to expand without restraint unless it is designed for a restriction (e.g., an anchor in the line to direct movement).

Appendix D
(Page 4 of 6)

GUIDELINES FOR VISUAL INSPECTION OF PIPING AND COMPONENTS DURING HOT FUNCTIONAL TESTING

Date _____

2.2 Piping Visual Inspection shall include: (continued)

[5] Where U-Bolt type restraints exist on hot small bore piping, visual clearance should exist between the bolt and the pipe so axial pipe growth is **NOT** restrained.

[6] For piping that is penetrating wall and floor sleeves, clearance should be maintained around outside diameter of the pipe. (Note if any binding occurs with the sleeve edge).

[7] Observe any piping insulation in contact with structures and/or components.

[8] During heat up, the piping should remain dimensionally stable, with **NO** gross distortion (i.e., bowed or distorted from installed configuration) caused by thermal expansion. (Note: Under some conditions, large diameter half-filled condensate lines can exhibit bowing as a normal occurrence; however, such observations shall be noted.)

[9] Piping shall remain in its designed location, and should **NOT** be displaced significantly (e.g., pipe is off the support steel or relatively close to the edge of the support steel).

[10] The thermal movement of small lines connected to larger "Main-run piping shall be visually inspected, as a minimum, through the first pipe support to ensure that it is free to move without constraint.

[11] Personnel shall also pay particular attention to long straight runs of hot piping expanding along the piping axis tending to "peel” or buckle insulation as the piping expands through pipe supports.

[12] Movement of socket welded small bore (less than 2") piping components and fittings into pipe support members shall be monitored for binding.

[13] Attention shall be paid to valve hand wheels and operators moving into adjacent pipe supports, handrails, conduit, etc.

Appendix D
(Page 5 of 6)

GUIDELINES FOR VISUAL INSPECTION OF PIPING AND COMPONENTS DURING HOT FUNCTIONAL TESTING

Date _____

2.3 Pipe Support Items to be observed and noted include:

[1] Support points subject to moving within structural framework to a location where the load point would move off the framework or to a point very close to the edge, e.g., Dynamic Snubbers clamp between two pieces of support steel, insulation protection lugs, pipe lugs, etc.

[2] Supports and Variable Springs and Constant Springs using lubrite plates should be observed for excessive movement causing less than 50 percent of the lubrite plate area being in bearing.

[3] Support component binding, on pipe, on structural components, or on equipment.

[4] Loose or missing hardware on support components, e.g., nuts, springs, cotter pins, etc.

[5] Pipe support members damaged or bent. Cracks on painted surfaces may be an indication of damaged or bent members.

[6] Concrete expansion anchors pulled loose at base plates.

[7] Variable Springs and Constant Springs topped or bottomed out.

[8] Dynamic Snubbers fully extended or retracted.

[9] Dynamic Snubbers which have protective covers **NOT** removed.

[10] Gross deformation or distortion of copper and stainless steel instrument air and instrument sensing lines. This shall include buckling, ovalizing, and "knife edge" bearing of these lines.

[11] Extreme extension of electrical cables and electrical wiring connected to in-line piping component (e.g., thermocouple leads, power, and control cables to motor operated valves).

Appendix D
(Page 6 of 6)

GUIDELINES FOR VISUAL INSPECTION OF PIPING AND COMPONENTS DURING HOT FUNCTIONAL TESTING

Date _____

2.3 Pipe Support Items to be observed and noted include: (continued)

[12] **IF** evidence of unexpected constraint of system piping or components is found, **THEN**

NOTIFY Test Director/Startup Test Engineer and document the problem on a Test Deficiency Notice for evaluation to determine if heat up should continue.

[13] **NO** adjustments are to be made to any load support, except as authorized by the Test Director/Startup Test Engineer or his designated representative. If binding is found, restraints can be adjusted to eliminate the unacceptable condition in accordance with an approved work document on a Test Deficiency Notice for evaluation.

[14] Dynamic Snubbers which become fully retracted or extended during this test may be adjusted in accordance with MAI-4.2A or shall be disconnected and documented. Dynamic Snubbers within 1/2” of the fully retracted or extended position shall be documented on a Test Deficiency Notice for evaluation.

Appendix E
(Page 1 of 2)

PROBLEM REPORT AND PROBLEM REPORT SHEET INSTRUCTIONS

1.0 REPORTING PROBLEMS

A. Problems or suspected problems shall be reported, evaluated and closed out on Problem Report form, Appendix E, Page 2 of 2, of this Attachment and attached to Attachment 31.

B. The Problem Report Log will be completed and attached to Attachment 30.

C. Problem Report form, Appendix E, Page 2 of 2 may be copied and completed as needed.

D. If the problem can not be resolved on a Problem Report then the Test Director will complete a Test Deficiency form for Major Test Deficiencies or non-conformances in accordance with approved procedures, i.e.; SMP-14.0, Appendix B, and attach to Attachment 33.

E. The Test Deficiency log will be completed and attached to Attachment 32.

F. All items identified will be entered in the Chronological Test Log and placed with Attachment 29.

1.1 Problem Report Instructions

A. Fill in date and time problem was found.

B. Identify by system, ID, ISO, or support no., as applicable.

C. Give brief description of problem.

D. Provide, if possible, proposed problem solution.

E. Sign name and return to Startup Test Engineer (STE).

F. STE will assign problem number from the problem log and forward problem to appropriate organization for resolution.

G. Organization responsible for resolution shall provide and sign solution.

H. STE shall review solution to ensure completeness and close Problem Report Sheet and log.

Appendix E
(Page 2 of 2)

PROBLEM REPORT AND PROBLEM REPORT SHEET INSTRUCTIONS

Date _____

1.1 Problem Report Instructions (continued)

PROBLEM REPORT

PROBLEM NO.:_____ DATE:_____ TIME:_____

SYSTEM: _____ IDENTIFIER NO.: _____

ISO NO:_____ SUPPORT NO:_____

PROBLEM DESCRIPTION:

PROPOSED SOLUTION:

PROBLEM FOUND BY:

PROBLEM SOLUTION:

SOLUTION INITIATED BY: SIGN _____ _____
NAME/ORGANIZATION DATE

SOLUTION REVIEWED BY: SIGN: _____ _____
NAME/ORGANIZATION DATE

PROBLEM CLOSED: SIGNATURE: _____ _____
TEST DIRECTOR DATE

NOTE: Write “N/A” in those spaces which are not applicable to the problem.

Attachment 1
(Page 1 of 42)

LISTING OF DYNAMIC SNUBBERS, VARIABLE SPRING, CONSTANT SPRING SUPPORTS AND PROTECTIVE DEVICES WITHIN THE HEAT-UP BOUNDARY FOR HOT FUNCTIONAL TESTING

SYSTEM 01					
SUPT TYPE	SUPPORT IDENTIFIER	DRAWING NUMBER	DRA NO.	LOCATION	STRESS PROBLEM NO.
DS	2-01A-301	2-01A301	52457-025, 026	AZ4/773	0600250-06-01
CS	2-01A-302N	2-01A302	52457-034, 035, 036	AZ5/767	0600250-06-01
CS	2-01A-302S	2-01A302	52457-034, 035, 036	AZ5/767	0600250-06-01
DS	2-01A-303N	2-01A303	52457-171, 172, 173, 174	AZ4/761	0600250-06-01
DS	2-01A-303S	2-01A303	52457-171, 172, 173, 174	AZ4/761	0600250-06-01
DS	2-01A-304E	2-01A304	52457-074, 075, 076	SOUTH VLV RM	0600250-06-01
DS	2-01A-304W	2-01A304	52457-074, 075, 076	SOUTH VLV RM	0600250-06-01
VS	2-01A-305	2-01A305	52457-063, 064, 065	AZ4/737	0600250-06-01
DS	2-01A-307N	2-01A307	52457-070, 071, 072, 073	AZ5/703	0600250-06-01
DS	2-01A-307S	2-01A307	52457-070, 071, 072, 073	AZ5/703	0600250-06-01
DS	2-01A-308	2-01A308	52457-057, 058, 059	SOUTH VLV RM	0600250-06-01
VS	2-01A-309	2-01A309	52457-010, 011	SOUTH VLV RM	0600250-06-01
DS	2-01A-312	2-01A312	52457-116, 117	SOUTH VLV RM	0600250-06-01
DS	2-01A-313	2-01A313	52457-165, 166	J-R6 SOUTH VLV RM	0600250-06-01
DS	2-01A-317	2-01A317	52457 NO MOD	SOUTH VLV RM	0600250-06-01
DS	2-01A-340	2-01A340	52457-017, 018, 019, 020	AZ160/771	0600250-06-02

Attachment 1
(Page 2 of 42)

LISTING OF DYNAMIC SNUBBERS, VARIABLE SPRING, CONSTANT SPRING SUPPORTS AND PROTECTIVE DEVICES WITHIN THE HEAT-UP BOUNDARY FOR HOT FUNCTIONAL TESTING

SYSTEM 01					
SUPT TYPE	SUPPORT IDENTIFIER	DRAWING NUMBER	DRA NO.	LOCATION	STRESS PROBLEM NO.
CS	2-01A-342N	2-01A342	52457-001, 008, 009	AZ176/767	0600250-06-02
CS	2-01A-342S	2-01A342	52457-001, 008, 009	AZ176/767	0600250-06-02
DS	2-01A-343N	2-01A343	52457-039, 040, 041, 042, 043, 044	AZ175/761	0600250-06-02
DS	2-01A-343S	2-01A343	52457-039, 040, 041, 042, 043, 044	AZ175/761	0600250-06-02
VS	2-01A-344	2-01A344	52457-088, 089, 090	AZ171/744	0600250-06-02
DS	2-01A-348	2-01A348	52457-045, 046	NORTH VLV RM	0600250-06-02
DS	2-01A-349	2-01A349	52457-163, 164	NORTH VLV RM	0600250-06-02
DS	2-01A-350	2-01A350	52457-023, 024	NORTH VLV RM	0600250-06-02
DS	2-01A-355	2-01A355	52457-142, 143, 144	NORTH VLV RM	0600250-06-02
DS	2-01A-380	2-01A380	52457-167, 168, 169, 170	AZ196/770	0600250-06-03
DS	2-01A-381	2-01A381	52457-012, 013	AZ183/722	0600250-06-03
CS	2-01A-382N	2-01A382	52457-154, 155, 156	AZ182/770	0600250-06-03
CS	2-01A-382S	2-01A382	52457-154, 155, 156	AZ182/770	0600250-06-03
DS	2-01A-383N	2-01A383	52457-066, 067, 068, 069	AZ183/759	0600250-06-03
DS	2-01A-383S	2-01A383	52457-066, 067, 068, 069	AZ183/759	0600250-06-03
VS	2-01A-384E	2-01A384	52457-060, 061, 062	AZ184/738	0600250-06-03

Attachment 1
(Page 3 of 42)

LISTING OF DYNAMIC SNUBBERS, VARIABLE SPRING, CONSTANT SPRING SUPPORTS AND PROTECTIVE DEVICES WITHIN THE HEAT-UP BOUNDARY FOR HOT FUNCTIONAL TESTING

SYSTEM 01					
SUPT TYPE	SUPPORT IDENTIFIER	DRAWING NUMBER	DRA NO.	LOCATION	STRESS PROBLEM NO.
VS	2-01A-384W	2-01A384	52457-060, 061, 062	AZ184/738	0600250-06-03
VS	2-01A-386	2-01A386	52457-051, 052, 053, 054	NORTH VLV RM	0600250-06-03
DS	2-01A-387	2-01A387	52457-139, 140, 141	NORTH VLV RM	0600250-06-03
DS	2-01A-389N	2-01A389	52457-124, 125, 126, 127, 136	NORTH VLV RM	0600250-06-03
DS	2-01A-389S	2-01A389	52457-124, 125, 126, 127, 136	NORTH VLV RM	0600250-06-03
VS	2-01A-389N	2-01A389	52457-124, 125, 126, 127, 136	NORTH VLV RM	0600250-06-03
VS	2-01A-389S	2-01A389	52457-124, 125, 126, 127, 136	NORTH VLV RM	0600250-06-03
DS	2-01A-391	2-01A391	52457-128, 129	NORTH VLV RM	0600250-06-03
DS	2-01A-392	2-01A392	52457-002, 003	NORTH VLV RM	0600250-06-03
DS	2-01A-397	2-01A397	52457-152, 153	NORTH VLV RM	0600250-06-03
CS	2-01A-422N	2-01A422	52457-197, 198, 199	AZ357/767	0600250-06-04
CS	2-01A-422S	2-01A422	52457-197, 198, 199	AZ357/767	0600250-06-04
DS	2-01A-423N	2-01A423	52457-091, 092, 093, 094	AZ357/760	0600250-06-04
DS	2-01A-423S	2-01A423	52457-091, 092, 093, 094	AZ357/760	0600250-06-04
DS	2-01A-424	2-01A424	52457-145, 146, 147, 148	AZ357/745	0600250-06-04
VS	2-01A-425E	2-01A425	52457-130, 131, 132	AZ356/737	0600250-06-04

Attachment 1
(Page 4 of 42)

LISTING OF DYNAMIC SNUBBERS, VARIABLE SPRING, CONSTANT SPRING SUPPORTS AND PROTECTIVE DEVICES WITHIN THE HEAT-UP BOUNDARY FOR HOT FUNCTIONAL TESTING

SYSTEM 01					
SUPT TYPE	SUPPORT IDENTIFIER	DRAWING NUMBER	DRA NO.	LOCATION	STRESS PROBLEM NO.
VS	2-01A-425W	2-01A425	52457-130, 131, 132	AZ356/737	0600250-06-04
VS	2-01A-427	2-01A427	52457-180, 181	SOUTH VLV RM	0600250-06-04
DS	2-01A-428	2-01A428	52457-021, 022	SOUTH VLV RM	0600250-06-04
DS	2-01A-429N	2-01A429	52457-137, 138	SOUTH VLV RM	0600250-06-04
DS	2-01A-429S	2-01A429	52457-137, 138	SOUTH VLV RM	0600250-06-04
VS	2-01A-431	2-01A431	52457-175, 176, 177	SOUTH VLV RM	0600250-06-04
DS	2-01A-435	2-01A435	52457-178, 179	SOUTH VLV RM	0600250-06-04
DS	2-01A-439	2-01A439	52457-122, 123	SOUTH VLV RM	0600250-06-04
DS	47A400-16	47A400-16	52866-604	T-T16/737	N3-1-01T (N3-1-1A)
DS	47A400-17	47A400-17	52866-606	N-T16/732	N3-1-01T (N3-1-1A)
DS	47A400-18	47A400-18	52866-605	K-T14/722	N3-1-01T (N3-1-1A)
DS	47A400-19	47A400-19	52866-600	K-T13/722	N3-1-01T (N3-1-1A)
DS	47A400-20	47A400-20	52866-601	J-T13/718	N3-1-01T (N3-1-1A)
DS	47A400-21	47A400-21	52866-602	K-T13/722	N3-1-01T (N3-1-1A)
DS	47A400-22T	47A400-22	52866-603, 617	K-T13/722	N3-1-01T (N3-1-1A)
DS	47A400-22B	47A400-22	52866-603, 617	K-T13/722	N3-1-01T (N3-1-1A)

Attachment 1
(Page 5 of 42)

LISTING OF DYNAMIC SNUBBERS, VARIABLE SPRING, CONSTANT SPRING SUPPORTS AND PROTECTIVE DEVICES WITHIN THE HEAT-UP BOUNDARY FOR HOT FUNCTIONAL TESTING

SYSTEM 01					
SUPT TYPE	SUPPORT IDENTIFIER	DRAWING NUMBER	DRA NO.	LOCATION	STRESS PROBLEM NO.
DS	47A400-23	47A400-23	52866-609	N-T16/732	N3-1-01T (N3-1-1A)
DS	47A400-24T	47A400-24	52866-618	T-T16/737	N3-1-01T (N3-1-1A)
DS	47A400-24B	47A400-24	52866-618	T-T16/737	N3-1-01T (N3-1-1A)
DS	47A400-25T	47A400-25	52866-616	M-T15/723	N3-1-01T (N3-1-1A)
DS	47A400-25B	47A400-25	52866-616	M-T15/723	N3-1-01T (N3-1-1A)
DS	47A400-26	47A400-26	52866-608	J-T12/718	N3-1-01T (N3-1-1A)
DS	47A400-27	47A400-27	52866-614, 615	M-T15/722	N3-1-01T (N3-1-1A)
DS	47A400-28	47A400-28	52866-610	J-T12/726	N3-1-01T (N3-1-1A)
DS	47A400-29	47A400-29	52866-613	J-T12/726	N3-1-01T (N3-1-1A)
DS	47A400-30T	47A400-30	52866-611	J-T10/718	N3-1-01T (N3-1-1A)
DS	47A400-30B	47A400-30	N/A	J-T10/718	N3-1-01T (N3-1-1A)
CS	01A-2MS-V007N	01A-2MS-V007	N/A	M-T15/727	N3-1-01T (N3-1-1A)
CS	01A-2MS-V007S	01A-2MS-V007	N/A	M-T15/727	N3-1-01T (N3-1-1A)
CS	01A-2MS-V008N	01A-2MS-V008	N/A	M-T14/727	N3-1-01T (N3-1-1A)
CS	01A-2MS-V008S	01A-2MS-V008	N/A	M-T14/727	N3-1-01T (N3-1-1A)
CS	01A-2MS-V009N	01A-2MS-V009	N/A	M-T13/727	N3-1-01T (N3-1-1A)

Attachment 1
(Page 6 of 42)

LISTING OF DYNAMIC SNUBBERS, VARIABLE SPRING, CONSTANT SPRING SUPPORTS AND PROTECTIVE DEVICES WITHIN THE HEAT-UP BOUNDARY FOR HOT FUNCTIONAL TESTING

SYSTEM 01					
SUPT TYPE	SUPPORT IDENTIFIER	DRAWING NUMBER	DRA NO.	LOCATION	STRESS PROBLEM NO.
CS	01A-2MS-V009S	01A-2MS-V009	N/A	M-T13/727	N3-1-01T (N3-1-1A)
CS	01A-2MS-V010E	01A-2MS-V010	N/A	K-T12/727	N3-1-01T (N3-1-1A)
CS	01A-2MS-V010W	01A-2MS-V010	N/A	K-T12/727	N3-1-01T (N3-1-1A)
VS	01A-2MS-V011E	01A-2MS-V011	N/A	K-T12/725	N3-1-01T (N3-1-1A)
VS	01A-2MS-V011W	01A-2MS-V011	N/A	K-T12/725	N3-1-01T (N3-1-1A)
VS	01A-2MS-V012E	01A-2MS-V012	N/A	J-T12/725	N3-1-01T (N3-1-1A)
VS	01A-2MS-V012W	01A-2MS-V012	N/A	J-T12/725	N3-1-01T (N3-1-1A)
CS	01A-2MS-V027E	01A-2MS-V027	N/A	M-T16/727	N3-1-01T (N3-1-1A)
CS	01A-2MS-V027W	01A-2MS-V027	N/A	M-T16/727	N3-1-01T (N3-1-1A)
CS	01A-2MS-V028N	01A-2MS-V028	N/A	K-T15/727	N3-1-01T (N3-1-1A)
CS	01A-2MS-V028S	01A-2MS-V028	N/A	K-T15/727	N3-1-01T (N3-1-1A)
CS	01A-2MS-V029N	01A-2MS-V029	N/A	K-T14/727	N3-1-01T (N3-1-1A)
CS	01A-2MS-V029S	01A-2MS-V029	N/A	K-T14/727	N3-1-01T (N3-1-1A)
CS	01A-2MS-V030N	01A-2MS-V030	N/A	K-T13/727	N3-1-01T (N3-1-1A)
CS	01A-2MS-V030S	01A-2MS-V030	N/A	K-T13/727	N3-1-01T (N3-1-1A)
CS	01A-2MS-V031E	01A-2MS-V031	N/A	K-T13/727	N3-1-01T (N3-1-1A)

Attachment 1
(Page 7 of 42)

LISTING OF DYNAMIC SNUBBERS, VARIABLE SPRING, CONSTANT SPRING SUPPORTS AND PROTECTIVE DEVICES WITHIN THE HEAT-UP BOUNDARY FOR HOT FUNCTIONAL TESTING

SYSTEM 01					
SUPT TYPE	SUPPORT IDENTIFIER	DRAWING NUMBER	DRA NO.	LOCATION	STRESS PROBLEM NO.
CS	01A-2MS-V031W	01A-2MS-V031	N/A	K-T13/727	N3-1-01T (N3-1-1A)
VS	01A-2MS-V032E	01A-2MS-V032	N/A	J-T13/725	N3-1-01T (N3-1-1A)
VS	01A-2MS-V032W	01A-2MS-V032	NA	J-T13/725	N3-1-01T (N3-1-1A)
CS	01A-2MS-V047E	01A-2MS-V047	N/A	M-T16/727	N3-1-01T (N3-1-1A)
CS	01A-2MS-V047W	01A-2MS-V047	N/A	M-T16/727	N3-1-01T (N3-1-1A)
CS	01A-2MS-V048N	01A-2MS-V048	N/A	K-T15/727	N3-1-01T (N3-1-1A)
CS	01A-2MS-V048S	01A-2MS-V048	N/A	K-T15/727	N3-1-01T (N3-1-1A)
CS	01A-2MS-V049N	01A-2MS-V049	N/A	K-T14/727	N3-1-01T (N3-1-1A)
CS	01A-2MS-V049S	01A-2MS-V049	N/A	K-T14/727	N3-1-01T (N3-1-1A)
CS	01A-2MS-V050N	01A-2MS-V050	N/A	K-T14/727	N3-1-01T (N3-1-1A)
CS	01A-2MS-V050S	01A-2MS-V050	N/A	K-T14/727	N3-1-01T (N3-1-1A)
CS	01A-2MS-V051E	01A-2MS-V051	N/A	K-T13/727	N3-1-01T (N3-1-1A)
CS	01A-2MS-V051W	01A-2MS-V051	N/A	K-T13/727	N3-1-01T (N3-1-1A)
VS	01A-2MS-V052E	01A-2MS-V052	N/A	J-T13/725	N3-1-01T (N3-1-1A)
VS	01A-2MS-V052W	01A-2MS-V052	N/A	J-T13/725	N3-1-01T (N3-1-1A)
CS	01A-2MS-V059N	01A-2MS-V059	N/A	M-T15/727	N3-1-01T (N3-1-1A)

Attachment 1
(Page 8 of 42)

LISTING OF DYNAMIC SNUBBERS, VARIABLE SPRING, CONSTANT SPRING SUPPORTS AND PROTECTIVE DEVICES WITHIN THE HEAT-UP BOUNDARY FOR HOT FUNCTIONAL TESTING

SYSTEM 01					
SUPT TYPE	SUPPORT IDENTIFIER	DRAWING NUMBER	DRA NO.	LOCATION	STRESS PROBLEM NO.
CS	01A-2MS-V059S	01A-2MS-V059	N/A	M-T15/727	N3-1-01T (N3-1-1A)
CS	01A-2MS-V060N	01A-2MS-V060	N/A	M-T14/727	N3-1-01T (N3-1-1A)
CS	01A-2MS-V060S	01A-2MS-V060	N/A	M-T14/727	N3-1-01T (N3-1-1A)
CS	01A-2MS-V061N	01A-2MS-V061	N/A	M-T12/727	N3-1-01T (N3-1-1A)
CS	01A-2MS-V061S	01A-2MS-V061	N/A	M-T12/727	N3-1-01T (N3-1-1A)
CS	01A-2MS-V062E	01A-2MS-V062	N/A	M-T12/727	N3-1-01T (N3-1-1A)
CS	01A-2MS-V062N	01A-2MS-V062	N/A	M-T12/727	N3-1-01T (N3-1-1A)
VS	01A-2MS-V063E	01A-2MS-V063	N/A	K-T12/725	N3-1-01T (N3-1-1A)
VS	01A-2MS-V063W	01A-2MS-V063	N/A	K-T12/725	N3-1-01T (N3-1-1A)
VS	01A-2MS-V064E	01A-2MS-V064	N/A	J-T12/725	N3-1-01T (N3-1-1A)
VS	01A-2MS-V064W	01A-2MS-V064	N/A	J-T12/725	N3-1-01T (N3-1-1A)
VS	01A-2MS-V065	01A-2MS-V065	N/A	J-T13/727	N3-1-01T (N3-1-1A)
VS	01A-2MS-V066	01A-2MS-V066	N/A	J-T12/727	N3-1-01T (N3-1-1A)
VS	01A-2MS-V067	01A-2MS-V067	N/A	J-T11/727	N3-1-01T (N3-1-1A)
VS	01A-2MS-V068	01A-2MS-V068	N/A	J-T10/727	N3-1-01T (N3-1-1A)
VS	01A-2MS-V069	01A-2MS-V069	N/A	H-T10/727	N3-1-01T (N3-1-1A)

Attachment 1
(Page 9 of 42)

LISTING OF DYNAMIC SNUBBERS, VARIABLE SPRING, CONSTANT SPRING SUPPORTS AND PROTECTIVE DEVICES WITHIN THE HEAT-UP BOUNDARY FOR HOT FUNCTIONAL TESTING

SYSTEM 01					
SUPT TYPE	SUPPORT IDENTIFIER	DRAWING NUMBER	DRA NO.	LOCATION	STRESS PROBLEM NO.
VS	01A-2MS-V070	01A-2MS-V070	N/A	H-T10/753	N3-1-01T (N3-1-1A)
VS	01A-2MS-V071	01A-2MS-V071	N/A	H-T10/753	N3-1-01T (N3-1-1A)
VS	01A-2MS-V072	01A-2MS-V072	N/A	G-T10/753	N3-1-01T (N3-1-1A)
VS	01A-2MS-V073	01A-2MS-V073	N/A	F-T10/753	N3-1-01T (N3-1-1A)
VS	01A-2MS-V074	01A-2MS-V074	N/A	F-T10/753	N3-1-01T (N3-1-1A)
VS	01A-2MS-V075	01A-2MS-V075	N/A	F-T10/721	N3-1-01T (N3-1-1A)
VS	01A-2MS-V075	01A-2MS-V075	N/A	F-T10/721	N3-1-01T (N3-1-1A)
VS	01A-2MS-V076	01A-2MS-V076	N/A	F-T11/725	N3-1-01T (N3-1-1A)
VS	01A-2MS-V077	01A-2MS-V077	N/A	F-T10/720	N3-1-01T (N3-1-1A)
VS	01A-2MS-V077	01A-2MS-V077	N/A	F-T10/720	N3-1-01T (N3-1-1A)
VS	01A-2MS-V078	01A-2MS-V078	N/A	F-T11/725	N3-1-01T (N3-1-1A)
VS	01A-2MS-V079	01A-2MS-V079	N/A	G-T10/721	N3-1-01T (N3-1-1A)
VS	01A-2MS-V079	01A-2MS-V079	N/A	G-T10/721	N3-1-01T (N3-1-1A)
VS	01A-2MS-V080	01A-2MS-V080	N/A	G-T11/725	N3-1-01T (N3-1-1A)
VS	01A-2MS-V081	01A-2MS-V081	N/A	G-T10/721	N3-1-01T (N3-1-1A)
VS	01A-2MS-V081	01A-2MS-V081	N/A	G-T10/721	N3-1-01T (N3-1-1A)

Attachment 1
(Page 10 of 42)

LISTING OF DYNAMIC SNUBBERS, VARIABLE SPRING, CONSTANT SPRING SUPPORTS AND PROTECTIVE DEVICES WITHIN THE HEAT-UP BOUNDARY FOR HOT FUNCTIONAL TESTING

SYSTEM 01					
SUPT TYPE	SUPPORT IDENTIFIER	DRAWING NUMBER	DRA NO.	LOCATION	STRESS PROBLEM NO.
VS	01A-2MS-V082	01A-2MS-V082	N/A	G-T11/725	N3-1-01T (N3-1-1A)
VS	01A-2MS-V083	01A-2MS-V083	N/A	G-T10/721	N3-1-01T (N3-1-1A)
VS	01A-2MS-V083	01A-2MS-V083	N/A	G-T10/721	N3-1-01T (N3-1-1A)
VS	01A-2MS-V084	01A-2MS-V084	N/A	G-T11/724	N3-1-01T (N3-1-1A)
VS	01A-2MS-V085	01A-2MS-V085	N/A	G-T10/721	N3-1-01T (N3-1-1A)
VS	01A-2MS-V085	01A-2MS-V085	N/A	G-T10/721	N3-1-01T (N3-1-1A)
VS	01A-2MS-V086	01A-2MS-V086	N/A	G-T11/727	N3-1-01T (N3-1-1A)
VS	01A-2MS-V087	01A-2MS-V087	N/A	G-T10/721	N3-1-01T (N3-1-1A)
VS	01A-2MS-V087	01A-2MS-V087	N/A	G-T10/721	N3-1-01T (N3-1-1A)
VS	01A-2MS-V088	01A-2MS-V088	N/A	G-T11/727	N3-1-01T (N3-1-1A)
VS	01A-2MS-V089	01A-2MS-V089	N/A	G-T10/721	N3-1-01T (N3-1-1A)
VS	01A-2MS-V089	01A-2MS-V089	N/A	G-T10/721	N3-1-01T (N3-1-1A)
VS	01A-2MS-V090	01A-2MS-V090	N/A	G-T11/724	N3-1-01T (N3-1-1A)
VS	01A-2MS-V091	01A-2MS-V091	N/A	H-T10/721	N3-1-01T (N3-1-1A)
VS	01A-2MS-V091	01A-2MS-V091	N/A	H-T10/721	N3-1-01T (N3-1-1A)
VS	01A-2MS-V092	01A-2MS-V092	N/A	H-T11/724	N3-1-01T (N3-1-1A)

Attachment 1
(Page 11 of 42)

LISTING OF DYNAMIC SNUBBERS, VARIABLE SPRING, CONSTANT SPRING SUPPORTS AND PROTECTIVE DEVICES WITHIN THE HEAT-UP BOUNDARY FOR HOT FUNCTIONAL TESTING

SYSTEM 01					
SUPT TYPE	**SUPPORT IDENTIFIER**	**DRAWING NUMBER**	**DRA NO.**	**LOCATION**	**STRESS PROBLEM NO.**
VS	01A-2MS-V093	01A-2MS-V093	N/A	H-T10/721	N3-1-01T (N3-1-1A)
VS	01A-2MS-V093	01A-2MS-V093	N/A	H-T10/721	N3-1-01T (N3-1-1A)
VS	01A-2MS-V094	01A-2MS-V094	N/A	H-T11/727	N3-1-01T (N3-1-1A)
VS	01A-2MS-V095	01A-2MS-V095	N/A	H-T10/721	N3-1-01T (N3-1-1A)
VS	01A-2MS-V095	01A-2MS-V095	N/A	H-T10/721	N3-1-01T (N3-1-1A)
VS	01A-2MS-V096	01A-2MS-V096	N/A	H-T11/727	N3-1-01T (N3-1-1A)
VS	01A-2MS-V097	01A-2MS-V097	N/A	H-T10/720	N3-1-01T (N3-1-1A)
VS	01A-2MS-V097	01A-2MS-V097	N/A	H-T10/720	N3-1-01T (N3-1-1A)
VS	01A-2MS-V098	01A-2MS-V098	N/A	H-T11/724	N3-1-01T (N3-1-1A)

Attachment 1
(Page 12 of 42)

LISTING OF DYNAMIC SNUBBERS, VARIABLE SPRING, CONSTANT SPRING SUPPORTS AND PROTECTIVE DEVICES WITHIN THE HEAT-UP BOUNDARY FOR HOT FUNCTIONAL TESTING

SYSTEM 03					
SUPPORT TYPE	**SUPPORT IDENTIFIER**	**DRAWING NUMBER**	**DRA NO.**	**LOCATION**	**STRESS PROBLEM NO.**
DS	2-03A-205	2-03A-205	52430-129, 130, 131, 132, 133, 134	U-A15/731	0600250-02-01
DS	2-03A-244	2-03A-244	52430-152, 153, 154, 155	AZ172/731	0600250-02-02
DS	2-03A-248	2-03A-248	52430-037, 038, 039	AZ165/731	0600250-02-02
DS	2-03A-285	2-03A-285	52430-174, 175, 176, 177, 178	CRANE WALL AZ188/731	0600250-02-03
DS	2-03A-289	2-03A-289	52430-065, 066, 067	AZ185/731	0600250-02-03
DS	2-03A-320	2-03A-320	52430-090, 091, 092	CRANE WALL AZ352/729	0600250-02-04
DS	2-03A-321	2-03A-321	52430-093, 094, 095	CRANE WALL AZ352/731	0600250-02-04
DS	2-03A-323	2-03A-323	52430-142, 143, 144, 145, 146	U-A14731	0600250-02-04
DS	2-03A-328	2-03A-328	52430-160, 161, 162, 163, 164	U-A15/731	0600250-02-04
DS	2-03A-369	2-03A-369	52435-118, 119, 120	AZ45/759’	N3-03-16A
DS	2-03A-370	2-03A-370	52435-042, 043	AZ35/759’	N3-03-16A
DS	2-03A-374E	2-03A-374	52435-082, 083	SOUTH VALVE ROOM U-6/730	N3-03-16A
DS	2-03A-374W	2-03A-374	52435-082, 083	SOUTH VALVE ROOM U-6/730	N3-03-16A

Attachment 1
(Page 13 of 42)

LISTING OF DYNAMIC SNUBBERS, VARIABLE SPRING, CONSTANT SPRING SUPPORTS AND PROTECTIVE DEVICES WITHIN THE HEAT-UP BOUNDARY FOR HOT FUNCTIONAL TESTING

SYSTEM 03					
SUPPORT TYPE	**SUPPORT IDENTIFIER**	**DRAWING NUMBER**	**DRA NO.**	**LOCATION**	**STRESS PROBLEM NO.**
DS	2-03A-377	2-03A-377	52435-209, 210, 211	SOUTH VALVE ROOM U-A15/730	N3-03-16A
VS	2-03A-377	2-03A-377	52435-209, 210, 211	SOUTH VALVE ROOM U-A15/730	N3-03-16A
VS	2-03A-378	2-03A-378	52435-036, 037	AZ35/759’	N3-03-16A
DS	2-03A-400	2-03A-400	52439-110	AZ144/744	N3-03-24A
DS	2-03A-401	2-03A-401	52439-151, 152	AZ144/744	N3-03-24A
DS	2-03A-402	2-03A-402	52439-022, 023	AZ144/753	N3-03-24A
DS	2-03A-404	2-03A-404	52439-167, 168, 169, 170	AZ144/753	N3-03-24A
VS	2-03A-408	2-03A-408	NO MOD	AZ160/759	N3-03-24A
DS	2-03A-411	2-03A-411	52439-028, 029	AZ120/759	N3-03-24A
DS	2-03A-415	2-03A-415	52439-076, 077	AZ144/752	N3-03-24A
DS	2-03A-423	2-03A-423	52439-057, 058	NORTH VALVE ROOM X-6/735	N3-03-24A
DS	2-03A-426	2-03A-426	52439-016, 017, 015	NORTH VALVE ROOM A-8/730	N3-03-24A
DS	2-03A-445	2-03A-445	52431-055, 056, 130, 131	AZ216/753	0600250-05-01
DS	2-03A-449	2-03A-449	52431-068, 069	AZ216/754	0600250-05-01
DS	2-03A-455	2-03A-455	52431-099, 100	AZ199/759	0600250-05-01
DS	2-03A-468	2-03A-468	52431-017, 018	AZ182/730	0600250-05-01
DS	2-03A-480	2-03A-480	52437-078, 079	AZ350/761	N3-03-18A
VS	2-03A-481	2-03A-481	52437-080, 081	AZ350/759	N3-03-18A

Attachment 1
(Page 14 of 42)

LISTING OF DYNAMIC SNUBBERS, VARIABLE SPRING, CONSTANT SPRING SUPPORTS AND PROTECTIVE DEVICES WITHIN THE HEAT-UP BOUNDARY FOR HOT FUNCTIONAL TESTING

SYSTEM 03					
SUPPORT TYPE	SUPPORT IDENTIFIER	DRAWING NUMBER	DRA NO.	LOCATION	STRESS PROBLEM NO.
DS	2-03A-482T	2-03A-482	52437-082, 083, 084, 085	AZ350/759	N3-03-18A
DS	2-03A-482B	2-03A-482	52437-082, 083, 084, 085	AZ350/759	N3-03-18A
DS	2-03A-483	2-03A-483	52437-086, 087, 088	AZ280/759	N3-03-18A
DS	2-03A-485V	2-03A-485	52437-093, 094, 095	AZ350/759	N3-03-18A
DS	2-03A-497	2-03A-497	52437-120, 121	AZ6/730	N3-03-18A
DS	2-03A-503	2-03A-503	52437-131, 132	AZ18/739	N3-03-18A
DS	2-03A-527	2-03A-527	52441-089, 090	S VLV RM A6-M	N3-03-R04A
DS	2-03A-563	2-03A-563	52441-111, 112	N VLV RM 6-A	0600250-02-11
DS	2-03A-582	2-03A-582	52441-073, 074	S VLV RM AZ350	N3-03-R05A
DS	2-03A-584	2-03A-584	52441-062, 063	S VLV RM 6-M	N3-03-R05A
DS	2-03B-35	2-03B-35	52431-057, 058	AZ301/743	0600250-05-01
DS	2-03B-37	2-03B-37	52431-23, 25	AZ215/741	0600250-05-01
DS	2-03B-39	2-03B-39	52431-109, 110	AZ216/730	0600250-05-01
DS	2-03B-71T	2-03B-71	52439-186, 187, 188, 189	AZ143/740	N3-03-24A
DS	2-03B-71B	2-03B-71	52439-186, 187, 188, 189	AZ143/740	N3-03-24A
VS	2-03B-80	2-03B-80	NO MOD	AZ301/744	N3-03-24A
DS	2-03B-82	2-03B-82	52439-042, 043, 044, 045	AZ143/727	N3-03-24A
VS	2-03B-82	2-03B-82	52439-042, 043, 044, 045	AZ143/727	N3-03-24A
DS	47A401-8-20T	47A401-8-20	52439-020	AZ135/758	N3-03-24A

Attachment 1
(Page 15 of 42)

LISTING OF DYNAMIC SNUBBERS, VARIABLE SPRING, CONSTANT SPRING SUPPORTS AND PROTECTIVE DEVICES WITHIN THE HEAT-UP BOUNDARY FOR HOT FUNCTIONAL TESTING

SYSTEM 03					
SUPPORT TYPE	**SUPPORT IDENTIFIER**	**DRAWING NUMBER**	**DRA NO.**	**LOCATION**	**STRESS PROBLEM NO.**
DS	47A401-8-20B	47A401-8-20	52439-020	AZ135/758	N3-03-24A
DS	47A401-8-21E	47A401-8-21	52437-163, 164	AZ350/739	N3-03-18A
DS	47A401-8-21W	47A401-8-21	52437-163, 164	AZ350/739	N3-03-18A
VS	2-47A401-8-28	2-47A401-8-28	52431-118, 119	AZ210/759	0600250-05-01
DS	2-47A401-8-29T	2-47A401-8-29	52431-50	AZ210/759	0600250-05-01
DS	2-47A401-8-29B	2-47A401-8-29	52431-50	AZ210/759	0600250-05-01
DS	2-47A401-9-15	2-47A401-9-15	52441-115, 116	S VLV RM AZ350	N3-03-R05A
DS	2-47A427-3-57T	2-47A427-3-57	52437-146	AZ331/759	N3-03-18A
DS	2-47A427-3-57B	2-47A427-3-57	52437-146	AZ331/759	N3-03-18A
VS	47A427-6-31	47A427-6-31	52431-004	AZ301/743	0600250-05-01
VS	47A427-6-32	47A427-6-32	52431-096	AZ216/730	0600250-05-01
VS	03B-2AWF-V047	03B2AWFV047	52433-024, 025	T-A15	N3-03-15A
DS	03B-2AWF-R155	03B2AWFR155	52435-190, 191	SOUTH VALVE ROOM U-6/746	N3-03-16A
DS	03B-2AWF-R171E	03B2AWFR171	52437-058, 059	U-A14/748	N3-03-18A
DS	03B-2AWF-R171W	03B2AWFR171	52437-058, 059	U-A14/748	N3-03-18A
VS	03B-2AWF-V177	03B2AWFV177	52437-076, 077	U-A14/753	N3-03-18A
VS	03B-2AWF-V178N	03B-2AWF-V178	56138-168, 169	AZ301/754	N3-03-20A
VS	03B-2AWF-V178S	03B-2AWF-V178	56138-168, 169	AZ301/754	N3-03-20A
DS	03B-2AWF-R242	03B2AWFR242	52437-073, 074, 075	U-A14/745	N3-03-18A

Attachment 1
(Page 16 of 42)

LISTING OF DYNAMIC SNUBBERS, VARIABLE SPRING, CONSTANT SPRING SUPPORTS AND PROTECTIVE DEVICES WITHIN THE HEAT-UP BOUNDARY FOR HOT FUNCTIONAL TESTING

SYSTEM 15					
SUPPORT TYPE	SUPPORT IDENTIFIER	DRAWING NUMBER	DRA NO.	LOCATION	STRESS PROBLEM NO.
DS	2-01B-003	2-01B-003	52461-001, 002	AZ22/727	0600250-07-01
VS	2-01B-042	2-01B-042	56241-038, 039	AZ14/714	0600250-07-02
VS	2-01B-062	2-01B-062	52462-034, 035	AZ148/712	0600250-07-02
VS	2-01B-080	2-01B-080	52463-013, 014	AZ14/711	0600250-07-03
DS	2-01B-086	2-01B-086	52463-024	AZ60/708	0600250-07-03
DS	2-01B-095	2-01B-095	52463-036, 037	AZ126/708	0600250-07-03
DS	2-01B-097	2-01B-097	52463-040, 041	AZ129/708	0600250-07-03
DS	2-01B-099	2-01B-099	52463-044, 045	AZ138/708	0600250-07-03
VS	2-01B-109	2-01B-109	52463-061, 062	AZ200/714	0600250-07-03
DS	2-01B-123	2-01B-123	52464-007, 017	AZ347/736	0600250-07-04
DS	2-01B-128U	2-01B-128	56241-031, 032, 033	AZ341/736	0600250-07-04
DS	2-01B-128L	2-01B-128	56241-031, 032, 033	AZ341/736	0600250-07-04
DS	2-01B-129	2-01B-129	52464-005, 015	AZ339/730	0600250-07-04
DS	2-01B-130	2-01B-130	52464-021	AZ339/725	0600250-07-04
DS	2-01B-131	2-01B-131	52464-003, 014	AZ339/727	0600250-07-04
VS	2-01B-133	2-01B-133	52464-024, 025	AZ339/728	0600250-07-04
VS	2-01B-172	2-01B-172	52465-029, 030	U-A15/747	0600250-07-05

Attachment 1
(Page 17 of 42)

LISTING OF DYNAMIC SNUBBERS, VARIABLE SPRING, CONSTANT SPRING SUPPORTS AND PROTECTIVE DEVICES WITHIN THE HEAT-UP BOUNDARY FOR HOT FUNCTIONAL TESTING

SYSTEM 15					
SUPPORT TYPE	SUPPORT IDENTIFIER	DRAWING NUMBER	DRA NO.	LOCATION	STRESS PROBLEM NO.
DS	2-01B-251	2-01B-251	52464-008, 009, 012, 013	AZ347/736	0600250-07-04
DS	2-01B-254	2-01B-254	52464-009, 011, 012	AZ347/736	0600250-07-04
VS	47A400-6-185	47A400-6-185	NO MOD	AZ35/	0600250-07-01
DS	47A400-6-306E	47A400-6-306	56966-099, 100, 101, 102	AZ45/729	0600250-07-01
DS	47A400-6-306W	47A400-6-306	56966-099, 100, 101, 102	AZ45/729	0600250-07-01
DS	47A400-6-310	47A400-6-310	NO MOD	AZ35/736	0600250-07-01
VS	47A400-6-312	47A400-6-312	NO MOD	AZ35/750	0600250-07-01
VS	47A400-6-318	47A400-6-318	NO MOD	AZ305/736	0600250-07-04
DS	47A400-6-321	47A400-6-321	56241-047, 048	AZ355/726	0600250-07-04
DS	47A400-6-322	47A400-6-322	NO MOD	AZ355/731	0600250-07-04
VS	47A400-6-323	47A400-6-323	52464-028	AZ355/731	0600250-07-04
DS	47A400-6-324	47A400-6-324	52464-001, 002	AZ315/731	0600250-07-04
VS	47A400-6-325	47A400-6-325	52464-026, 027	AZ325/731	0600250-07-04
VS	47A400-6-326	47A400-6-326	56966-015	AZ350/727	0600250-07-04
DS	47A400-6-328	47A400-6-328	52464-004, 006	AZ339/730	0600250-07-04
DS	47A400-6-329	47A400-6-329	56241-079, 080	AZ300/729	0600250-07-04
VS	47A400-6-338	47A400-6-338	NO MOD	AZ150/733	0600250-07-02
VS	47A400-6-339	47A400-6-339	52462-066, 067	AZ167/731	0600250-07-02
VS	47A400-6-346	47A400-6-346	56241-403	AZ190/726	0600250-07-03
VS	47A400-6-349	47A400-6-349	52463-085	AZ225/731	0600250-07-03

Attachment 1
(Page 18 of 42)

LISTING OF DYNAMIC SNUBBERS, VARIABLE SPRING, CONSTANT SPRING SUPPORTS AND PROTECTIVE DEVICES WITHIN THE HEAT-UP BOUNDARY FOR HOT FUNCTIONAL TESTING

SYSTEM 15					
SUPPORT TYPE	**SUPPORT IDENTIFIER**	**DRAWING NUMBER**	**DRA NO.**	**LOCATION**	**STRESS PROBLEM NO.**
VS	47A400-6-351	47A400-6-351	52463-087, 164	AZ225/754	0600250-07-03
VS	47A400-6-354	47A400-6-354	56241-286, 287	AZ185/735	0600250-07-03
DS	47A400-6-356	47A400-6-356	52463-095, 096, 097, 098	AZ200/729	0600250-07-03
DS	47A400-6-357	47A400-6-357	52463-150, 151	AZ200/729	0600250-07-03
DS	47A400-6-364	47A400-6-364	52465-035, 036	U-A14/741	0600250-07-05
DS	47A400-6-394	47A400-6-394	52465-021, 022	U-A15/748	0600250-07-05
DS	2-47A400-6-406	2-47A400-6-406	52462-076, 077	AZ175/728	0600250-07-02
DS	2-47A400-6-413	2-47A400-6-413	52462-074, 075	AZ162/730	0600250-07-02
DS	47A400-7-93	47A400-7-93	52461-048, 049, 050	AZ22/732	0600250-07-01

Attachment 1
(Page 19 of 42)

LISTING OF DYNAMIC SNUBBERS, VARIABLE SPRING, CONSTANT SPRING SUPPORTS AND PROTECTIVE DEVICES WITHIN THE HEAT-UP BOUNDARY FOR HOT FUNCTIONAL TESTING

SYSTEM 62					
SUPPORT TYPE	SUPPORT IDENTIFIER	DRAWING NUMBER	DRA NO.	LOCATION	STRESS PROBLEM NO.
VS	2-62A-240	2-62A-240	52487-001, 002, 003	AZ110/728	N3-62-13R
DS	2-62A-247	2-62A-247	52487-004, 005, 006	AZ81/704	N3-62-13R
DS	2-62A-250	2-62A-250	52487-207, 208	AZ54/709	N3-62-13R
VS	2-62A-252	2-62A-252	56241-366, 367, 368	AZ54/714	N3-62-13R
DS	2-62A-254	2-62A-254	52487-051, 052	AZ50/706	N3-62-13R
DS	2-62A-256N	2-62A-256	52487-055, 056	AZ51/704	N3-62-13R
DS	2-62A-256S	2-62A-256	52487-055, 056	AZ51/704	N3-62-13R
DS	2-62A-256V	2-62A-256	52487-055, 056	AZ57/704	N3-62-13R
VS	2-62A-258	2-62A-258	52487-282, 283	AZ48/713	N3-62-13R
DS	2-62A-262	2-62A-262	52487-095, 096	AZ47/706	N3-62-13R
VS	2-62A-266	2-62A-266	56966-042, 043	AZ46/714	N3-62-13R
DS	2-62A-269	2-62A-269	52487-013, 014	AZ46/706	N3-62-13R
DS	2-62A-271E	2-62A-271	52487-061, 062	AZ45/704	N3-62-13R
DS	2-62A-271W	2-62A-271	52487-061, 062	AZ45/704	N3-62-13R
VS	2-62A-290	2-62A-290	56966-076, 077, 245	AZ215/705	0600250-08-10

Attachment 1
(Page 20 of 42)

LISTING OF DYNAMIC SNUBBERS, VARIABLE SPRING, CONSTANT SPRING SUPPORTS AND PROTECTIVE DEVICES WITHIN THE HEAT-UP BOUNDARY FOR HOT FUNCTIONAL TESTING

SYSTEM 62					
SUPPORT TYPE	SUPPORT IDENTIFIER	DRAWING NUMBER	DRA NO.	LOCATION	STRESS PROBLEM NO.
DS	2-62A-291	2-62A-291	52481-085, 086, 087, 088	AZ215/711	0600250-08-10
DS	2-62A-294	2-62A-294	52481-003, 004	AZ215/727	0600250-08-10
DS	2-62A-319	2-62A-319	52488-089, 090	AZ128/716	N3-68-04R
DS	2-62A-320	2-62A-320	56241-194, 195, 196	AZ107/723	N3-62-14R
CS	2-62A-346	2-62A-346	NO MOD	AZ103/732	N3-62-14R
DS	2-62A-357	2-62A-357	56241-323, 324, 325, 326	AZ343/727	N3-62-14R
DS	2-62A-358	2-62A-358	52488-146, 147, 148, 149	AZ328/727	N3-62-14R
DS	2-62A-360	2-62A-360	56241-551, 552	AZ322/727	N3-62-14R
DS	2-62A-362	2-62A-362	5696-090, 091	AZ322/727	N3-62-14R
DS	2-62A-363	2-62A-363	NO MOD	AZ321/726	N3-62-14R
DS	2-62A-366	2-62A-366	5696-092, 093	AZ318/727	N3-62-14R
DS	2-62A-369	2-62A-369	52488-150, 151, 152	AZ128/727	N3-62-14R
DS	2-62A-371	2-62A-371	56966-005, 006	AZ128/728	N3-62-14R
CS	2-62A-375	2-62A-375	56966-018, 019, 020	AZ103/734	N3-62-14R
DS	2-62A-377	2-62A-377	56966-050, 051	AZ95/730	N3-62-14R

Attachment 1
(Page 21 of 42)

LISTING OF DYNAMIC SNUBBERS, VARIABLE SPRING, CONSTANT SPRING SUPPORTS AND PROTECTIVE DEVICES WITHIN THE HEAT-UP BOUNDARY FOR HOT FUNCTIONAL TESTING

SYSTEM 62					
SUPPORT TYPE	SUPPORT IDENTIFIER	DRAWING NUMBER	DRA NO.	LOCATION	STRESS PROBLEM NO.
DS	2-62A-382	2-62A-382	52488-059, 060, 061	AZ48/727	N3-62-14R
DS	2-62A-463	2-62A-463	52483-040, 041	AZ225/723	0600250-08-17
VS	2-62A-530	2-62A-530	52487-250, 251	AZ45/705	N3-62-13R
DS	2-62A-531	2-62A-531	52487-252, 253	AZ44/712	N3-62-13R
VS	2-62A-532	2-62A-532	52487-085, 086	AZ52/706	N3-62-13R
DS	2-62A-533	2-62A-533	52487-010, 011, 012	AZ50/706	N3-62-13R
VS	2-62A-535	2-62A-535	52487-087, 088, 293	AZ48/705	N3-62-13R
DS	2-62A-536	2-62A-536	52487-089, 090, 106	AZ46/712	N3-62-13R
DS	2-62A-557	2-62A-557	52488-094, 095	AZ43/727	N3-62-14R
DS	2-62A-559	2-62A-559	52488-092, 093	AZ43/727	N3-62-14R
DS	2-62A-561	2-62A-561	52488-162, 163	AZ43/727	N3-62-14R
VS	2-62A-562	2-62A-562	NO MOD	AZ43/727	N3-62-14R
DS	2-62A-563	2-62A-563	52488-116, 117, 118	AZ43/727	N3-62-14R
VS	2-62A-584	2-62A-584	52482-116, 117	AZ178/730	0600250-08-12
DS	2-62A-589	2-62A-589	52482-078, 079	AZ150/729	0600250-08-12
VS	2-62A-621	2-62A-621	52487-025, 026, 027	AZ302/716	N3-62-13R

Attachment 1
(Page 22 of 42)

LISTING OF DYNAMIC SNUBBERS, VARIABLE SPRING, CONSTANT SPRING SUPPORTS AND PROTECTIVE DEVICES WITHIN THE HEAT-UP BOUNDARY FOR HOT FUNCTIONAL TESTING

SYSTEM 62					
SUPPORT TYPE	SUPPORT IDENTIFIER	DRAWING NUMBER	DRA NO.	LOCATION	STRESS PROBLEM NO.
DS	2-62A-624	2-62A-624	52487-028, 029, 030	AZ45/706	N3-62-13R
DS	2-62A-625	2-62A-625	52487-031, 032, 033	AZ57/706	N3-62-13R
DS	2-62A-630	2-62A-630	52482-107, 108, 109	AZ150/729	0600250-08-12
VS	2-62A-637	2-62A-637	52482-096, 097	AZ110/719	0600250-08-12
DS	2-62A-802	2-62A-802	52482-070, 071	AZ200/719	0600250-08-12
DS	2-62A-808	2-62A-808	52482-083, 084	AZ210/726	0600250-08-12
DS	2-62A-809	2-62A-809	52482-037, 038	AZ210/725	0600250-08-12
DS	2-62A-810	2-62A-810	52482-072, 073, 074	AZ208/725	0600250-08-12
DS	2-68-365	2-68-365	52481-044, 045, 046	AZ220/703	0600250-08-10
DS	47A406-12-79N	47A406-12-79	52487-067, 068	AZ48/706	N3-62-13R
DS	47A406-12-79S	47A406-12-79	52487-067, 068	AZ48/706	N3-62-13R
DS	47A406-12-79W	47A406-12-79	52487-067, 068	AZ48/706	N3-62-13R
DS	47A406-12-82	47A406-12-82	52487-069	AZ43/705	N3-62-13R
DS	2-47A406-12-89	2-47A406-12-89	52487-183, 184	AZ48/705	N3-62-13R
DS	2-47A406-12-93N	2-47A406-12-93	52487-177, 178, 186	AZ44/712	N3-62-13R
DS	2-47A406-12-93S	2-47A406-12-93	52487-177, 178, 186	AZ44/712	N3-62-13R

Attachment 1
(Page 23 of 42)

LISTING OF DYNAMIC SNUBBERS, VARIABLE SPRING, CONSTANT SPRING SUPPORTS AND PROTECTIVE DEVICES WITHIN THE HEAT-UP BOUNDARY FOR HOT FUNCTIONAL TESTING

SYSTEM 62					
SUPPORT TYPE	SUPPORT IDENTIFIER	DRAWING NUMBER	DRA NO.	LOCATION	STRESS PROBLEM NO.
DS	2-47A406-12-94E	2-47A406-12-94	52487-179, 180, 188	AZ44/712	N3-62-13R
DS	2-47A406-12-94W	2-47A406-12-94	52487-179, 180, 188	AZ44/712	N3-62-13R
DS	2-47A406-12-97T	2-47A406-12-97	52487-175, 176	AZ326/712	N3-62-13R
DS	2-47A406-12-97B	2-47A406-12-97	52487-175, 176	AZ326/712	N3-62-13R
DS	2-47A406-12-98N	2-47A406-12-98	52487-272, 275, 295, 296	AZ53/712	N3-62-13R
DS	2-47A406-12-98S	2-47A406-12-98	52487-272, 275, 295, 296	AZ53/712	N3-62-13R
DS	2-47A406-12-101	2-47A406-12-101	52487-280, 281	AZ44/712	N3-62-13R
DS	47A406-13-56	47A406-13-56	52482-014, 015	AZ210/726	0600250-08-12
DS	2-47A406-13-106	2-47A406-13-106	52488-154, 155	AZ52/727	N3-62-14R
DS	2-47A406-14-67	2-47A406-14-67	52481-052	AZ123/720	0600250-08-10
VS	2-47A406-14-81	2-47A406-14-81	52488-156, 157	AZ321/728	N3-62-14R
DS	2-47A406-14-84	2-47A406-14-84	52481-112, 113, 114	AZ123/726	0600250-08-10
DS	2-47A406-14-85	2-47A406-14-85	52481-110	AZ122/725	0600250-08-10
DS	2-47A406-14-86	2-47A406-14-86	52481-111	AZ122/725	0600250-08-10
DS	2-47A406-14-87	2-47A406-14-87	52481-105, 106	AZ185/730	0600250-08-10
DS	2-47A560-38-2	2-47A560-38-2	52481-099	AZ220/704	0600250-08-10

Attachment 1
(Page 24 of 42)

LISTING OF DYNAMIC SNUBBERS, VARIABLE SPRING, CONSTANT SPRING SUPPORTS AND PROTECTIVE DEVICES WITHIN THE HEAT-UP BOUNDARY FOR HOT FUNCTIONAL TESTING

SYSTEM 62					
SUPPORT TYPE	**SUPPORT IDENTIFIER**	**DRAWING NUMBER**	**DRA NO.**	**LOCATION**	**STRESS PROBLEM NO.**
DS	47A465-3-52	47A465-3-52	52487-224, 265	AZ54/712	N3-62-13R

Attachment 1
(Page 25 of 42)

LISTING OF DYNAMIC SNUBBERS, VARIABLE SPRING, CONSTANT SPRING SUPPORTS AND PROTECTIVE DEVICES WITHIN THE HEAT-UP BOUNDARY FOR HOT FUNCTIONAL TESTING

SYSTEM 63					
SUPPORT TYPE	SUPPORT IDENTIFIER	DRAWING NUMBER	DRA NO.	LOCATION	STRESS PROBLEM NO.
DS	2-63-001	2-63-001	52491-001, 002	AZ42/725	0600250-09-01
VS	2-63-002	2-63-002	52491-045, 046, 047	AZ45/728	0600250-09-01
DS	2-63-005	2-63-005	52491-116, 117, 118	AZ40/728	0600250-09-01
DS	2-63-008	2-63-008	52491-090, 091, 092	AZ31/718	0600250-09-01
DS	2-63-011	2-63-011	52491-042, 043	AZ40/726	0600250-09-01
VS	2-63-013	2-63-013	52491-004, 005	AZ34/740	0600250-09-01
DS	2-63-014	2-63-014	52491-013, 014	AZ34/738	0600250-09-01
VS	2-63-016	2-63-016	52491-212, 213	AZ18/741	0600250-09-01
DS	2-63-018	2-63-018	52491-140, 141	AZ21/738	0600250-09-01
DS	2-63-019	2-63-019	52491-125, 126, 127	AZ16/740	0600250-09-01
VS	2-63-020	2-63-020	52491-200, 201	AZ12/740	0600250-09-01
DS	2-63-022	2-63-022	52491-011, 012	AZ358/740	0600250-09-01
DS	2-63-023	2-63-023	52491-178, 179, 182	AZ342/736	0600250-09-01
DS	2-63-024	2-63-024	52491-015, 016	AZ342/740	0600250-09-01
VS	2-63-026	2-63-026	52491-034	AZ320/741	0600250-09-01

Attachment 1
(Page 26 of 42)

LISTING OF DYNAMIC SNUBBERS, VARIABLE SPRING, CONSTANT SPRING SUPPORTS AND PROTECTIVE DEVICES WITHIN THE HEAT-UP BOUNDARY FOR HOT FUNCTIONAL TESTING

SYSTEM 63					
SUPPORT TYPE	SUPPORT IDENTIFIER	DRAWING NUMBER	DRA NO.	LOCATION	STRESS PROBLEM NO.
VS	2-63-028	2-63-028	52491-098, 099	AZ308/741	0600250-09-01
DS	2-63-029	2-63-029	52491-017, 018	AZ308/735	0600250-09-01
DS	2-63-030	2-63-030	52491-166, 167	AZ308/738	0600250-09-01
DS	2-63-031	2-63-031	52491-145, 146, 147	AZ300/735	0600250-09-01
DS	2-63-032	2-63-032	52491-163, 164, 165	AZ300/734	0600250-09-01
DS	2-63-035	2-63-035	52491-142, 143, 144	AZ35/728	0600250-09-01
DS	2-63-038E	2-63-038	52491-020, 021	AZ35/731	0600250-09-01
DS	2-63-038W	2-63-038	52491-020, 021	AZ35/731	0600250-09-01
DS	2-63-042	2-63-042	52492-042, 043, 044	AZ297/734	0600250-09-02
DS	2-63-043	2-63-043	52492-215, 216	AZ297/734	0600250-09-02
DS	2-63-055	2-63-055	52492-092, 093	AZ111/741	0600250-09-02
DS	2-63-062	2-63-062	52492-203, 204	AZ215/741	0600250-09-02
VS	2-63-063	2-63-063	52492-057	AZ218/736	0600250-09-02
DS	2-63-064	2-63-064	52492-115, 116	AZ218/734	0600250-09-02
DS	2-63-069	2-63-069	52492-245, 246, 247, 248	AZ215/740	0600250-09-02

Attachment 1
(Page 27 of 42)

LISTING OF DYNAMIC SNUBBERS, VARIABLE SPRING, CONSTANT SPRING SUPPORTS AND PROTECTIVE DEVICES WITHIN THE HEAT-UP BOUNDARY FOR HOT FUNCTIONAL TESTING

SYSTEM 63					
SUPPORT TYPE	SUPPORT IDENTIFIER	DRAWING NUMBER	DRA NO.	LOCATION	STRESS PROBLEM NO.
VS	2-63-070	2-63-070	52492-080, 081, 082, 083, 084, 085	AZ225/729	0600250-09-02
DS	2-63-072	2-63-072	52492-069, 070, 071	AZ218/725	0600250-09-02
DS	2-63-078	2-63-078	52492-222, 223	AZ145/736	0600250-09-02
VS	2-63-080	2-63-080	52492-193, 194, 195	AZ145/729	0600250-09-02
DS	2-63-095N	2-63-095	52492-003, 004	AZ215/727	0600250-09-02
DS	2-63-095S	2-63-095	52492-003, 004	AZ215/727	0600250-09-02
DS	2-63-156	2-63-156	52494-045	AZ300/725	0600250-09-05
DS	2-63-161	2-63-161	52494-091, 092	AZ300/723	0600250-09-05
DS	2-63-163	2-63-163	52494-230, 231	AZ304/722	0600250-09-05
DS	2-63-164	2-63-164	52494-215, 216	AZ302/722	0600250-09-05
VS	2-63-165	2-63-165	52494-089, 090	AZ302/722	0600250-09-05
DS	2-63-169	2-63-169	52494-018, 021 54923-434	AZ295/732	0600250-09-05
DS	2-63-185	2-63-185	52494-031, 032	AZ42/729	0600250-09-05
DS	2-63-285	2-63-285	52496-093, 094	AZ181/730	0600250-09-10

Attachment 1
(Page 28 of 42)

LISTING OF DYNAMIC SNUBBERS, VARIABLE SPRING, CONSTANT SPRING SUPPORTS AND PROTECTIVE DEVICES WITHIN THE HEAT-UP BOUNDARY FOR HOT FUNCTIONAL TESTING

SYSTEM 63					
SUPPORT TYPE	SUPPORT IDENTIFIER	DRAWING NUMBER	DRA NO.	LOCATION	STRESS PROBLEM NO.
VS	2-63-342	2-63-342	52497-137, 138	AZ188/731	0600250-09-11
DS	2-63-365	2-63-365	52497-057, 058, 059, 060	AZ37/727	0600250-09-11
VS	2-63-367	2-63-367	56241-464, 465, 466	AZ37/731	0600250-09-11
VS	2-63-451	2-63-451	52491-170, 171, 172	AZ321/725	0600250-09-01
DS	2-63-453	2-63-453	52491-150, 151, 152, 153, 154, 155	AZ324/724	0600250-09-01
DS	2-63-458	2-63-458	52491-173, 174, 175	AZ324/723	0600250-09-01
DS	2-63-459	2-63-459	52491-157, 158, 159	AZ324/718	0600250-09-01
VS	2-63-466E	2-63-466	52491-206, 207	AZ324/730	0600250-09-01
VS	2-63-466W	2-63-466	52491-206, 207	AZ324/730	0600250-09-01
DS	2-63-520	2-63-520	56241-558, 559	AZ45/723	0600250-09-05
DS	2-63-526	2-63-526	52494-271,	AZ45/725	0600250-09-05
DS	2-63-528	2-63-528	52494-054, 055	AZ293/733	0600250-09-05
DS	2-63-571	2-63-571	54783-140, 141, 142	AZ150/729	0600250-09-10
DS	2-63-573	2-63-573	52496-095, 096	AZ181/730	0600250-09-10

Attachment 1
(Page 29 of 42)

LISTING OF DYNAMIC SNUBBERS, VARIABLE SPRING, CONSTANT SPRING SUPPORTS AND PROTECTIVE DEVICES WITHIN THE HEAT-UP BOUNDARY FOR HOT FUNCTIONAL TESTING

SYSTEM 63					
SUPPORT TYPE	SUPPORT IDENTIFIER	DRAWING NUMBER	DRA NO.	LOCATION	STRESS PROBLEM NO.
DS	2-63-584	2-63-584	52497-087, 088, 089	AZ39/732	0600250-09-11
VS	2-63-588	2-63-588	52497-029, 030	AZ142/731	0600250-09-11
DS	2-63-592	2-63-592	52497-148, 149	AZ344/741	0600250-09-11
DS	47A432-1-8T	47A432-1-8	52502-246, 247	U-A12/688	N3-63-08A
DS	47A432-1-8B	47A432-1-8	52502-246, 247	U-A12/688	N3-63-08A
DS	47A432-2-2	47A432-2-2	52502-284, 285	V-A11/718	N3-63-08A
DS	47A432-3-6	47A432-3-6	56241-652, 653	AZ37/728	0600250-09-11
DS	47A432-3-8	47A432-3-8	NO MOD	AZ142/727	0600250-09-11
DS	2-47A432-3-13	2-47A432-3-13	52497-160, 161	AZ35/737	0600250-09-11
DS	2-47A432-3-14	2-47A432-3-14	52497-142	AZ38/727	0600250-09-11
DS	2-47A432-3-15	2-47A432-3-15	52497-139, 140	AZ142/728	0600250-09-11
DS	2-47A432-3-16	2-47A432-3-16	52497-143, 144	AZ157/725	0600250-09-11
DS	2-47A432-6-17	2-47A432-6-17	52502-343, 344	V-A11/693	N3-63-08A
DS	47A435-3-8	47A435-3-8	52502-061, 062, 063, 064, 065	U-A13/706	N3-63-08A
DS	2-47A435-3-18T	2-47A435-3-18T	52502-341, 342	U-C13/719	N3-63-08A
DS	2-47A435-3-18B	2-47A435-3-18B	52502-341, 342	U-C13/719	N3-63-08A

Attachment 1
(Page 30 of 42)

LISTING OF DYNAMIC SNUBBERS, VARIABLE SPRING, CONSTANT SPRING SUPPORTS AND PROTECTIVE DEVICES WITHIN THE HEAT-UP BOUNDARY FOR HOT FUNCTIONAL TESTING

SYSTEM 63					
SUPPORT TYPE	SUPPORT IDENTIFIER	DRAWING NUMBER	DRA NO.	LOCATION	STRESS PROBLEM NO.
DS	2-47A435-12-6	2-47A435-12-6	52494-081	AZ291/721	0600250-09-05
DS	47A435-12-62	47A435-12-62	52491-232, 233	AZ324/731	0600250-09-01
DS	47A435-12-89	47A435-12-89	52491-256	AZ324/728	0600250-09-01
DS	2-47A435-12-93	2-47A435-12-93	52494-243, 244	AZ300/723	0600250-09-05
DS	47A435-13-60	47A435-13-60	52491-235	AZ32/723	0600250-09-01
VS	47A435-13-73	47A435-13-73	52491-238, 239	AZ347/740	0600250-09-01
DS	2-47A435-13-117	2-47A435-13-117	52494-256, 257	AZ45/721	0600250-09-05
DS	2-47A435-13-118	2-47A435-13-118	52494-258, 259	AZ45/718	0600250-09-05
VS	2-47A435-13-119	2-47A435-13-119	52494-260, 261	AZ45/718	0600250-09-05
VS	47A435-14-61	47A435-14-61	NO MOD	AZ125/721	0600250-09-10
DS	47A435-14-80N	47A435-14-80	52492-047, 048, 049, 050	AZ146/725	0600250-09-02
DS	47A435-14-80S	47A435-14-80	52492-047, 048, 049, 050	AZ146/725	0600250-09-02
VS	47A435-14-81	47A435-14-81	52492-086, 087	AZ145/730	0600250-09-02
VS	47A435-14-84	47A435-14-84	52492-028	AZ150/730	0600250-09-02
DS	2-47A435-14-107	2-47A435-14-107	52492-268, 269	AZ143/727	0600250-09-02
DS	2-47A435-14-109	2-47A435-14-109	56966-088, 089	AZ199/721	0600250-09-10
VS	2-47A435-14-110	2-47A435-14-110	56966-094	AZ132/720	0600250-09-06

Attachment 1
(Page 31 of 42)

LISTING OF DYNAMIC SNUBBERS, VARIABLE SPRING, CONSTANT SPRING SUPPORTS AND PROTECTIVE DEVICES WITHIN THE HEAT-UP BOUNDARY FOR HOT FUNCTIONAL TESTING

SYSTEM 63					
SUPPORT TYPE	SUPPORT IDENTIFIER	DRAWING NUMBER	DRA NO.	LOCATION	STRESS PROBLEM NO.
VS	47A435-15-58	47A435-15-58	56241-054, 055	AZ228/720	0600250-09-06
DS	47A435-15-70	47A435-15-70	52492-099	AZ232/718	0600250-09-02
DS	47A435-15-79	47A435-15-79	52492-177	AZ219/724	0600250-09-02
DS	47A435-15-97	47A435-15-97	52492-021	AZ218/723	0600250-09-02
DS	47A435-16-17	47A435-16-17	52494-232, 233	AZ286/729	0600250-09-05
DS	47A435-16-21E	47A435-16-21	52491-289, 293, 294, 679, 680	AZ292/733	0600250-09-05
DS	47A435-16-21W	47A435-16-21	52491-289, 293, 294, 679, 680	AZ292/733	0600250-09-05
DS	47A435-16-31	47A435-16-31	NO MOD	AZ285/731	0600250-09-05
DS	47A435-16-33N	47A435-16-33	52494-024, 046	AZ289/731	0600250-09-05
DS	47A435-16-33S	47A435-16-33	52494-024, 046	AZ289/731	0600250-09-05
DS	47A435-16-34N	47A435-16-34	52494-020, 023	AZ284/726	0600250-09-05
DS	47A435-16-34S	47A435-16-34	52494-020, 023	AZ284/726	0600250-09-05
DS	47A435-16-47	47A435-16-47	52491-278	AZ289/733	0600250-09-05
DS	47A435-16-50S	47A435-16-50	NO MOD	AZ298/724	0600250-09-05
DS	47A435-16-50E	47A435-16-50	NO MOD	AZ298/724	0600250-09-05
DS	47A435-16-51	47A435-16-51	NO MOD	AZ291/729	0600250-09-05
DS	47A435-16-55E	47A435-16-55	52494-254, 255, 278	AZ295/732	0600250-09-05
DS	47A435-16-55S	47A435-16-55	52494-254, 255, 278	AZ295/732	0600250-09-05

Attachment 1
(Page 32 of 42)

LISTING OF DYNAMIC SNUBBERS, VARIABLE SPRING, CONSTANT SPRING SUPPORTS AND PROTECTIVE DEVICES WITHIN THE HEAT-UP BOUNDARY FOR HOT FUNCTIONAL TESTING

SYSTEM 63					
SUPPORT TYPE	SUPPORT IDENTIFIER	DRAWING NUMBER	DRA NO.	LOCATION	STRESS PROBLEM NO.
DS	47A435-16-62N	47A435-16-62	56241-153, 154	AZ294/725	0600250-09-05
DS	47A435-16-62S	47A435-16-62	56241-153, 154	AZ294/725	0600250-09-05
DS	47A435-16-65	47A435-16-65	52494-262, 263 56241-061, 062	AZ296/718	0600250-09-05
DS	47A435-16-66	47A435-16-66	52494-047, 048, 049	AZ296/719	0600250-09-05
DS	2-47A435-16-73	2-47A435-16-73	52494-240, 241	AZ284/724	0600250-09-05
VS	2-47A435-16-75	2-47A435-16-75	52494-242	AZ284/724	0600250-09-05
DS	2-47A435-16-76	2-47A435-16-76	52494-237	AZ284/729	0600250-09-05
DS	2-47A435-16-77	2-47A435-16-77	52494-246, 247	AZ285/729	0600250-09-05
DS	2-47A435-16-78	2-47A435-16-78	52494-248, 249	AZ285/729	0600250-09-05
VS	2-47A435-16-79	2-47A435-16-79	52494-136	AZ298/731	0600250-09-05
VS	47A437-1-25	47A437-1-25	52502-318, 319	T-A10/690	N3-63-08A
DS	2-47A437-1-62	2-47A437-1-62	52502-329, 330	U-A12/688	N3-63-08A
DS	2-47A437-2-4	2-47A437-2-4	52502-339, 340	U-A11/681	N3-63-08A
DS	47A437-2-22	47A437-2-22	52502-241	T-A11/684	N3-63-08A
DS	47A437-2-24	47A437-2-24	52502-244, 245	U-A11/686	N3-63-08A
VS	47A437-2-28N	47A437-2-28	52502-013, 014	U-A11/676	N3-63-08A

Attachment 1
(Page 33 of 42)

LISTING OF DYNAMIC SNUBBERS, VARIABLE SPRING, CONSTANT SPRING SUPPORTS AND PROTECTIVE DEVICES WITHIN THE HEAT-UP BOUNDARY FOR HOT FUNCTIONAL TESTING

SYSTEM 63					
SUPPORT TYPE	SUPPORT IDENTIFIER	DRAWING NUMBER	DRA NO.	LOCATION	STRESS PROBLEM NO.
VS	47A437-2-28S	47A437-2-28	52502-013, 014	U-A11/676	N3-63-08A
VS	47A437-2-29E	47A437-2-29	52502-294, 295, 296	U-A10/681	N3-63-08A
VS	47A437-2-29W	47A437-2-29	52502-294, 295, 296	U-A10/681	N3-63-08A
VS	63-2SIS-V134	63-2SIS-V134	52502-092, 093	V-A11/678	N3-63-08A
VS	63-2SIS-V136	63-2SIS-V136	52502-132	V-A11/676	N3-63-08A
VS	63-2SIS-V139NW	63-2SIS-V139	52502-169, 170, 171	V-A10/677	N3-63-08A
VS	63-2SIS-V139SE	63-2SIS-V139	52502-169, 170, 171	V-A10/677	N3-63-08A
DS	63-2SIS-R142N	63-2SIS-R142	52502-286, 287	V-A10/687	N3-63-08A
DS	63-2SIS-R142S	63-2SIS-R142	52502-286, 287	V-A10/687	N3-63-08A
VS	63-2SIS-V143N	63-2SIS-V143	52502-310, 311	V-A11/690	N3-63-08A
VS	63-2SIS-V143S	63-2SIS-V143	52502-310, 311	V-A11/690	N3-63-08A
VS	63-2SIS-V145	63-2SIS-V145	52502-289, 290, 291	V-A11/691	N3-63-08A
DS	63-2SIS-R155	63-2SIS-R155	52502-015, 016, 017	V-A12/688	N3-63-08A
VS	63-2SIS-V158	63-2SIS-V158	52502-167, 168	U-A11/678	N3-63-08A
VS	63-2SIS-V163N	63-2SIS-V163	56138-053, 054, 055	U-A10/677	N3-63-08A
VS	63-2SIS-V163S	63-2SIS-V163	56138-053, 054, 055	U-A10/677	N3-63-08A

Attachment 1
(Page 34 of 42)

LISTING OF DYNAMIC SNUBBERS, VARIABLE SPRING, CONSTANT SPRING SUPPORTS AND PROTECTIVE DEVICES WITHIN THE HEAT-UP BOUNDARY FOR HOT FUNCTIONAL TESTING

SYSTEM 63					
SUPPORT TYPE	**SUPPORT IDENTIFIER**	**DRAWING NUMBER**	**DRA NO.**	**LOCATION**	**STRESS PROBLEM NO.**
VS	63-2SIS-V166N	63-2SIS-V166	52502-157, 158	U-A10/689	N3-63-08A
VS	63-2SIS-V166S	63-2SIS-V166	52502-157, 158	U-A10/689	N3-63-08A
DS	63-2SIS-R168N	63-2SIS-R168	52502-159, 160	U-A10/689	N3-63-08A
DS	63-2SIS-R168S	63-2SIS-R168	52502-159, 160	U-A10/689	N3-63-08A
DS	63-2SIS-R170	63-2SIS-R170	52502-282, 283	U-A12/687	N3-63-08A
VS	63-2SIS-V179	63-2SIS-V179	52502-078, 079	V-A11/697	N3-63-08A
VS	63-2SIS-V180	63-2SIS-V180	52502-300, 301, 302, 303	V-A11/723	N3-63-08A
DS	63-2SIS-R211	63-2SIS-R211	52502-156	V-A12/688	N3-63-08A
DS	63-2SIS-R214	63-2SIS-R214	52502-192, 193	V-A11/686	N3-63-08A
DS	63-2SIS-R216	63-2SIS-R216	52502-147, 148	U-A11/684	N3-63-08A
DS	63-2SIS-R240N	63-2SIS-R240	52502-274, 275	U-A12/686	N3-63-08A
DS	63-2SIS-R240S	63-2SIS-R240	52502-274, 275	U-A12/686	N3-63-08A
DS	63-2SIS-R242	63-2SIS-R242	52502-151, 152	U-A12/686	N3-63-08A
DS	63-2SIS-R245	63-2SIS-R245	52502-288	T-A11/686	N3-63-08A
DS	63-2SIS-R276	63-2SIS-R276	52502-058, 059	T-A11/689	N3-63-08A

Attachment 1
(Page 35 of 42)

LISTING OF DYNAMIC SNUBBERS, VARIABLE SPRING, CONSTANT SPRING SUPPORTS AND PROTECTIVE DEVICES WITHIN THE HEAT-UP BOUNDARY FOR HOT FUNCTIONAL TESTING

SYSTEM 68					
SUPPORT TYPE	SUPPORT IDENTIFIER	DRAWING NUMBER	DRA NO.	LOCATION	STRESS PROBLEM NO.
VS	2-68-001	2-68-001	52521-024, 025	AZ147/724	0600250-13-01
VS	2-68-005	2-68-005	52521-026, 027, 028	AZ92/725	0600250-13-01
VS	2-68-011N	2-68-011	52522-054, 055, 056, 057, 151	AZ104/787	N3-68-04R
VS	2-68-011S	2-68-011	52522-054, 055, 056, 057, 151	AZ104/787	N3-68-04R
DS	2-68-020	2-68-020	52522-080, 081, 082	AZ104/733	N3-68-04R
DS	2-68-021	2-68-021	52522-084, 085, 086	AZ110/729	N3-68-04R
DS	2-68-023E	2-68-023	56966-082, 083	AZ109/736	N3-68-04R
DS	2-68-023W	2-68-023	56966-082, 083	AZ109/736	N3-68-04R
DS	2-68-024	2-68-024	52523-312	AZ108/736	N3-68-04R
VS	2-68-025	2-68-025	52522-091, 092, 093, 094	AZ110/733	N3-68-04R
VS	2-68-028	2-68-028	52522-096	AZ104/754	N3-68-04R
DS	2-68-030	2-68-030	52523-314	AZ110/732	N3-68-04R
DS	2-68-031	2-68-031	52522-079	AZ104/733	N3-68-04R
DS	2-68-032	2-68-032	52522-052, 053	AZ98/736	N3-68-04R
DS	2-68-033	2-68-033	52522-076, 077	AZ98/736	N3-68-04R
DS	2-68-034	2-68-034	56966-095, 096	AZ98/733	N3-68-04R

Attachment 1
(Page 36 of 42)

LISTING OF DYNAMIC SNUBBERS, VARIABLE SPRING, CONSTANT SPRING SUPPORTS AND PROTECTIVE DEVICES WITHIN THE HEAT-UP BOUNDARY FOR HOT FUNCTIONAL TESTING

SYSTEM 68					
SUPPORT TYPE	SUPPORT IDENTIFIER	DRAWING NUMBER	DRA NO.	LOCATION	STRESS PROBLEM NO.
DS	2-68-036	2-68-036	52522-097, 098, 152	AZ99/733	N3-68-04R
DS	2-68-042	2-68-042	52522-010, 011	AZ104/735	N3-68-04R
DS	2-68-043	2-68-043	56241-247	AZ108/735	N3-68-04R
DS	2-68-044	2-68-044	52522-006, 007	AZ108/734	N3-68-04R
DS	2-68-050	2-68-050	52522-012, 013	AZ104/733	N3-68-04R
DS	2-68-053	2-68-053	56241-308, 309	AZ98/733	N3-68-04R
DS	2-68-093	2-68-093	56966-084, 085	AZ100/784	N3-68-05R
CS	2-68-094	2-68-094	52523-131, 132	AZ99/791	N3-68-05R
DS	2-68-096	2-68-096	52523-229, 230	AZ104/784	N3-68-05R
VS	2-68-334	2-68-334	52521-051, 052, 053	AZ47/707	N3-68-03R
VS	2-68-348	2-68-348	52521-022, 023	AZ137/704	0600250-13-10
VS	2-68-379	2-68-379	52521-054, 055, 056 53304-025, 027	AZ323/707	0600250-13-12
VS	2-68-382	2-68-382	52521-049, 050	AZ321/708	0600250-13-12
DS	2-68-412N	2-68-412	52523-135, 136, 137	AZ99/786	N3-68-05R
DS	2-68-412S	2-68-412	52523-135, 136, 137	AZ99/788	N3-68-05R

Attachment 1
(Page 37 of 42)

LISTING OF DYNAMIC SNUBBERS, VARIABLE SPRING, CONSTANT SPRING SUPPORTS AND PROTECTIVE DEVICES WITHIN THE HEAT-UP BOUNDARY FOR HOT FUNCTIONAL TESTING

SYSTEM 68					
SUPPORT TYPE	**SUPPORT IDENTIFIER**	**DRAWING NUMBER**	**DRA NO.**	**LOCATION**	**STRESS PROBLEM NO.**
DS	2-68-415N	2-68-415	52523-258, 259, 260, 261, 262, 263	AZ97/787	N3-68-05R
DS	2-68-415S	2-68-415	52523-258, 259, 260, 261, 262, 263	AZ97/787	N3-68-05R
DS	2-68-427	2-68-427	52523-276, 277, 278, 279, 280	AZ97/778	N3-68-05R
DS	2-47A465-1-108	2-47A465-1-108	52522-046, 047	AZ110/729	N3-68-03R
DS	47A465-2-23	47A465-2-23	52525-027, 028	AZ100/776	N3-68-28R
DS	47A465-2-41	47A465-2-41	56966-075	AZ104/775	N3-68-28R
CS	47A465-2-42	47A465-2-42	NO MOD	AZ104/775	N3-68-28R
DS	47A465-2-46	47A465-2-46	52525-023, 024	AZ97/758	N3-68-28R
VS	47A465-2-47	47A465-2-47	52525-025, 026	AZ100/758	N3-68-28R
VS	2-47A465-2-81	2-47A465-2-81	52525-043	AZ99/734	N3-68-28R
DS	47A465-4-7E	47A465-4-7	52525-015, 016	AZ104/736	N3-68-28R
DS	47A465-4-7W	47A465-4-7	52525-015, 016	AZ104/736	N3-68-28R
DS	47A465-8-60	47A465-8-60	52524-015, 016	AZ335/742	N3-68-10R
DS	47A465-8-61	47A465-8-61	56966-078, 079	AZ65/742	N3-68-10R
DS	47A465-8-63	47A465-8-63	52524-040, 041, 042	AZ145/742	N3-68-10R
VS	47A465-8-73	47A465-8-73	52524-092, 093	AZ40/756	N3-68-10R

Attachment 1
(Page 38 of 42)

LISTING OF DYNAMIC SNUBBERS, VARIABLE SPRING, CONSTANT SPRING SUPPORTS AND PROTECTIVE DEVICES WITHIN THE HEAT-UP BOUNDARY FOR HOT FUNCTIONAL TESTING

SYSTEM 68					
SUPPORT TYPE	SUPPORT IDENTIFIER	DRAWING NUMBER	DRA NO.	LOCATION	STRESS PROBLEM NO.
VS	2-47A465-8-97	2-47A465-8-97	52524-094	AZ111/742	N3-68-10R

SYSTEM 74					
SUPPORT TYPE	SUPPORT IDENTIFIER	DRAWING NUMBER	DRA NO.	LOCATION	STRESS PROBLEM NO.
DS	2-74-008	2-74-008	52535-026, 027, 028, 031, 032	AZ354/707	0600250-03-01
DS	2-74-010	2-74-010	52535-041, 042, 043, 044, 057 56241-654, 655, 656	AZ354/707	0600250-03-01
DS	2-74-011	2-74-011	52535-016, 019, 020	AZ348/707	0600250-03-01
VS	2-74-012	2-74-012	52535-022, 023, 024, 025	AZ347/707	0600250-03-01
DS	2-74-015	2-74-015	52535-006, 007	AZ0/724	0600250-03-01
DS	2-74-017	2-74-017	NO MOD	AZ0/722	0600250-03-01
VS	2-74-022	2-74-022	52535-029, 030, 053	AZ354/716	0600250-03-01
DS	47A432-3-4	47A432-3-4	52535-008, 039	AZ349/707	0600250-03-01
VS	2-47A432-3-17	2-47A432-3-17	52535-061	AZ354/707	0600250-03-01
VS	2-47A435-2-2	2-47A435-2-2	52538-348, 349	V-A10/719	N3-74-04A
VS	74-2RHR-V002	74-2RHR-V002	52538-222, 223	V-A10/729	N3-74-04A
DS	74-2RHR-R003E	74-2RHR-R003E	52538-174, 175	V-A10/727	N3-74-04A
DS	74-2RHR-R003W	74-2RHR-R003W	52538-174, 175	V-A10/727	N3-74-04A
DS	74-2RHR-R006	74-2RHR-R006	52538-181, 182	V-A10/721	N3-74-04A
VS	74-2RHR-V011	74-2RHR-V011	52538-86	V-A10/730	N3-74-04A
DS	74-2RHR-R014N	74-2RHR-R014N	52538-187, 188, 189	W-A10/732	N3-74-04A
DS	74-2RHR-R014S	74-2RHR-R014S	52538-187, 188, 189	W-A10/732	N3-74-04A

Attachment 1
(Page 39 of 42)

LISTING OF DYNAMIC SNUBBERS, VARIABLE SPRING, CONSTANT SPRING SUPPORTS AND PROTECTIVE DEVICES WITHIN THE HEAT-UP BOUNDARY FOR HOT FUNCTIONAL TESTING

SYSTEM 74					
SUPPORT TYPE	**SUPPORT IDENTIFIER**	**DRAWING NUMBER**	**DRA NO.**	**LOCATION**	**STRESS PROBLEM NO.**
VS	74-2RHR-V015N	74-2RHR-V015N	52538-134, 135, 136	W-A10/733	N3-74-04A
VS	74-2RHR-V015S	74-2RHR-V015S	52538-134, 135, 136	W-A10/733	N3-74-04A
DS	74-2RHR-R028	74-2RHR-R028	52538-229, 230	V-A11/732	N3-74-04A
DS	74-2RHR-R037	74-2RHR-R037	52538-216, 217	W-A9/730	N3-74-04A
DS	74-2RHR-V038	74-2RHR-V038	52538-137, 138	W-A9/730	N3-74-04A
VS	74-2RHR-V041	74-2RHR-V041	52538-231, 232	W-A9/734	N3-74-04A
DS	74-2RHR-R058	74-2RHR-R058	52538-250, 251	V-A11/689	N3-74-04A
DS	74-2RHR-R096	74-2RHR-R096	52538-38, 39	V-A11/688	N3-74-04A
VS	74-2RHR-V121	74-2RHR-V121	52538-87, 88, 89	W-A10/719	N3-74-04A
DS	74-2RHR-R216	74-2RHR-R216	52538-276, 277	W-A11/728	N3-74-04A
DS	74-2RHR-R220	74-2RHR-R220	52538-162, 163, 164, 165	W-A11/729	N3-74-04A
DS	74-2RHR-R230	74-2RHR-R230	52538-122	W-A11/729	N3-74-04A
DS	74-2RHR-R232	74-2RHR-R232	52538-172, 173	W-A11/729	N3-74-04A

Attachment 1
(Page 40 of 42)

LISTING OF DYNAMIC SNUBBERS, VARIABLE SPRING, CONSTANT SPRING SUPPORTS AND PROTECTIVE DEVICES WITHIN THE HEAT-UP BOUNDARY FOR HOT FUNCTIONAL TESTING

PIPE RUPTURE RESTRAINTS				
SUPPORT TYPE	SUPPORT IDENTIFIER	DRAWING NUMBER	DRA NO.	STRESS PROBLEM NO.
PD	PD00-1	48W1700-8		N/A
PD	PD00-3	48W1700-8		N/A
PD	PD00-5	48W1700-8		N/A
PD	PD00-7	48W1700-28		N/A
PD	PD00-8	48W1700-8		N/A
PD	PD00-11	48W1700-14		N/A
PD	PD00-12	48W1700-15		N/A
PD	PD00-13	48W1700-17		N/A
PD	PD00-14	48W1700-17		N/A
PD	PD00-15	48W1700-17		N/A
PD	PD00-17	48W1700-18		N/A
PD	PD00-18	48W1700-19		N/A
PD	PD00-19	48W1700-21		N/A
PD	PD00-20	48W1700-21		N/A
PD	PD00-21	48W1700-21		N/A
PD	PD00-23	48W1700-22		N/A
PD	PD00-25	48W1700-23		N/A
PD	PD00-26	48W1700-24		N/A
PD	PD00-28	48W1700-25		N/A
PD	PD00-30	48W1700-26		N/A
PD	PD00-31	48W1700-27		N/A
PD	PD00-33	48W1700-16		N/A
PD	PD00-34	48W1700-20		N/A
PD	PD00-35	48W1700-30		N/A
PD	PD00-36	48W1700-29		N/A
PD	PD00-37	48W1700-30		N/A
PD	PD00-38	48W1700-29		N/A

Attachment 1
(Page 41 of 42)

LISTING OF DYNAMIC SNUBBERS, VARIABLE SPRING, CONSTANT SPRING SUPPORTS AND PROTECTIVE DEVICES WITHIN THE HEAT-UP BOUNDARY FOR HOT FUNCTIONAL TESTING

PIPE RUPTURE RESTRAINTS				
SUPPORT TYPE	SUPPORT IDENTIFIER	DRAWING NUMBER	DRA NO.	STRESS PROBLEM NO.
PD	PD00-39	48W1700-30		N/A
PD	PD00-40	48W1700-30		N/A
PD	PD00-41	48W1700-29		N/A
PD	PD01-3	48W1701-08		N/A
PD	PD01-4	48W1701-08		N/A
PD	PD01-5	48W1701-08		N/A
PD	PD01-8	48W1701-11		N/A
PD	PD01-9	48W1701-11		N/A
PD	PD01-10	48W1701-09		N/A
PD	PD01-11	48W1701-09		N/A
PD	PD01-12	48W1701-13		N/A
PD	PD01-13	48W1701-13		N/A
PD	PD01-14	48W1701-15		N/A
PD	PD01-15	48W1701-15		N/A
PD	PD03-6	48W1703-5		N/A
PD	PD03-8	48W1703-10		N/A
PD	PD03-9	48W1703-13		N/A
PD	PD03-11	48W1703-13		N/A
PD	PD07-1	48W1707-21		N/A
PD	PD07-2	48W1707-21		N/A
PD	PD07-4	48W1707-22		N/A
PD	PD07-5	48W1707-22		N/A
PD	PD07-10	48W1707-21		N/A
PD	PD07-11	48W1707-21		N/A
PD	PD07-13	48W1707-23		N/A
PD	PD07-14	48W1707-23		N/A
PD	PD07-31	48W1707-12		N/A
PD	PD07-35	48W1707-05		N/A

Attachment 1
(Page 42 of 42)

LISTING OF DYNAMIC SNUBBERS, VARIABLE SPRING, CONSTANT SPRING SUPPORTS AND PROTECTIVE DEVICES WITHIN THE HEAT-UP BOUNDARY FOR HOT FUNCTIONAL TESTING

PIPE RUPTURE RESTRAINTS				
SUPPORT TYPE	SUPPORT IDENTIFIER	DRAWING NUMBER	DRA NO.	STRESS PROBLEM NO.
PD	PD07-38	48W1707-12		N/A
PD	PD08-1	48W1708-08		N/A
PD	PD08-2	48W1708-12		N/A
PD	PD08-3	48W1708-12		N/A
PD	PD08-8	48W1708-12		N/A
PD	PD08-9	48W1708-12		N/A
PD	PD08-10	48W1708-13		N/A
PD	PD08-11	48W1708-10		N/A
PD	L12D	48W1352-2		N/A
PD	L22D	48W1352-2		N/A
PD	L32D	48W1352-2		N/A
PD	L42D	48W1352-2		N/A
PD	M42S	48W1350-1&2		N/A

Attachment 2
(Page 1 of 20)

INSTRUMENTED THERMAL MONITORING LOCATIONS AND ACCEPTANCE CRITERIA

1.0 THERMAL MONITORING

NOTES

1) Instrumented Displacement type monitoring (Linear Position Transducer) will be used to obtain the required movements required by this Attachment.

2) The Hot Functional Test displacements for the RC Monitoring Locations are based on a maximum temperature of 557°F, which is shown in the formula below. *All other Monitoring Locations will use the temperature, shown in the Piping Temperature column of the tables, in place of the 557°F, as shown in the formula below. To obtain displacements at a different temperature, the following ratio shall be used and all calculations shall be retained with this PTI.

   New Displacement = [(New Temperature - 70°F) / (*557°F - 70°F)] x HFT Displacement

3) The temperature monitoring will require installation of Resistance Temperature Detectors (RTDs) at selected locations to measure temperature which will be used to calculate displacements at a different temperature from the maximum displacements provided using the formula in NOTE 2 above.

4) The temperatures that Thermal Expansion test data is taken at or considered are:

   A. Ambient - baseline data

   B. 250°F (245°-255°), 350°F (345°-355°), 450°F (445°-455°), and 557°F (553°-560°) (547°F design basis) (See TVA Test Scoping documents for further information.)

   C. The measurements using the following data shall be recorded on Attachments 3, 4, 5, 6, 7 and 8 for the appropriate temperature plateau.

5) Tolerances on the data taken, at the above temperature plateaus, are ± 10% of the data given on Pages 2 thru 20 of this Attachment or ± 1/4” whichever is greater.

Attachment 2
(Page 2 of 20)

INSTRUMENTED THERMAL MONITORING LOCATIONS AND ACCEPTANCE CRITERIA

NUCLEAR STEAM SUPPLY SYSTEM LOOP MAXIMUM PREDICTED THERMAL MOVEMENTS

MONITOR POINT I.D.	LOCATION	DIRECTION	MAX PREDICTED MOVEMENT (IN) (1 & 3)
RC-1	TOP S.G.#1	+Y	+ 2.739”
RC-2	TOP S.G.#2	+Y	+ 2.739”
RC-3	TOP S.G.#3	+Y	+ 2.739”
RC-4	TOP S.G.#4	+Y	+ 2.739”
RC-5	PZR TOP	+Y	+ 2.68”(2)
RC-6	TOP S.G.#1	-X	- 1.794”
RC-7	TOP S.G.#2	+X	+ 1.794”
RC-8	TOP S.G.#3	+X	+ 1.794”
RC-9	TOP S.G.#4	-X	- 1.794”
RC-10	RCP #1	-X	- 1.31”
RC-11	RCP #2	+X	+ 1.31”
RC-12	RCP #3	+X	+ 1.31”
RC-13	RCP #4	-X	- 1.31”
RC-14	HOT LEG #1	+Z	+ 0.3”
RC-15	HOT LEG #1		NOT USED
RC-16	CROSS-OVER LEG #1	+Z	+ 0.873”
RC-17	CROSS-OVER LEG #1	+Y	- 0.677”
RC-18	COLD LEG #1	+Z	+ 0.866”
RC-19	COLD LEG #1		NOT USED

1 Predicted movements are actual calculated moments and an allowance of 25% can be added for uncertainties. Predicted moments are obtained from Westinghouse document No: LTR-PAFM-10-119, Rev. 1.

2 Extrapolated from Steam Generator data.

3 The HFT displacements shown in this Attachment are based on 557°F. To obtain displacements at different temperatures, use the formula shown in NOTE 2 at beginning of this Attachment.

Attachment 2
(Page 3 of 20)

INSTRUMENTED THERMAL MONITORING LOCATIONS AND ACCEPTANCE CRITERIA

NUCLEAR STEAM SUPPLY SYSTEM LOOP, PREDICTED THERMAL MOVEMENT (MAXIMUM)

MONITOR POINT I.D.	LOCATION	DIRECTION	MAX PREDICTED MOVEMENT (IN) (1 & 3)
RC-20	HOT LEG #2	+Z	+ 0.3”
RC-21	HOT LEG #2		NOT USED
RC-22	CROSS-OVER LEG #2	+Z	+ 0.873”
RC-23	CROSS-OVER LEG #2	+Y	- 0.677”
RC-24	COLD LEG #2	+Z	+ 0.866”
RC-25	COLD LEG #2		NOT USED
RC-26	HOT LEG #3	-Z	- 0.3”
RC-27	HOT LEG #3		NOT USED
RC-28	CROSS-OVER LEG #3	-Z	- 0.873”
RC-29	CROSS-OVER LEG #3	+Y	- 0.677”
RC-30	COLD LEG #3	-Z	- 0.866”
RC-31	COLD LEG #3		NOT USED
RC-32	HOT LEG #4	-Z	- 0.3”
RC-33	HOT LEG #4		NOT USED
RC-34	CROSS-OVER LEG #4	-Z	- 0.873”
RC-35	CROSS-OVER LEG #4	+Y	- 0.677”
RC-36	COLD LEG #4	-Z	- 0.866”
RC-37	COLD LEG #4		NOT USED
RC-38	PRZ TOP		NOT USED

1 Predicted movements are actual calculated moments and an allowance of 25% can be added for uncertainties. Predicted moments are obtained from Westinghouse document No: LTR-PAFM-10-119, Rev. 1.

2 Extrapolated from Steam Generator data.

3 The HFT displacements shown in this Attachment are based on 557°F. To obtain displacements at different temperatures, use the formula shown in NOTE 2 at beginning of this Attachment.

4 The displacements shown above are in global coordinates, see sheets 4 and 5 of this Attachment. These are local coordinate system by Westinghouse.

Attachment 2
(Page 4 of 20)

INSTRUMENTED THERMAL MONITORING LOCATIONS AND ACCEPTANCE CRITERIA

Westinghouse Local Coordinate System for Unit 2

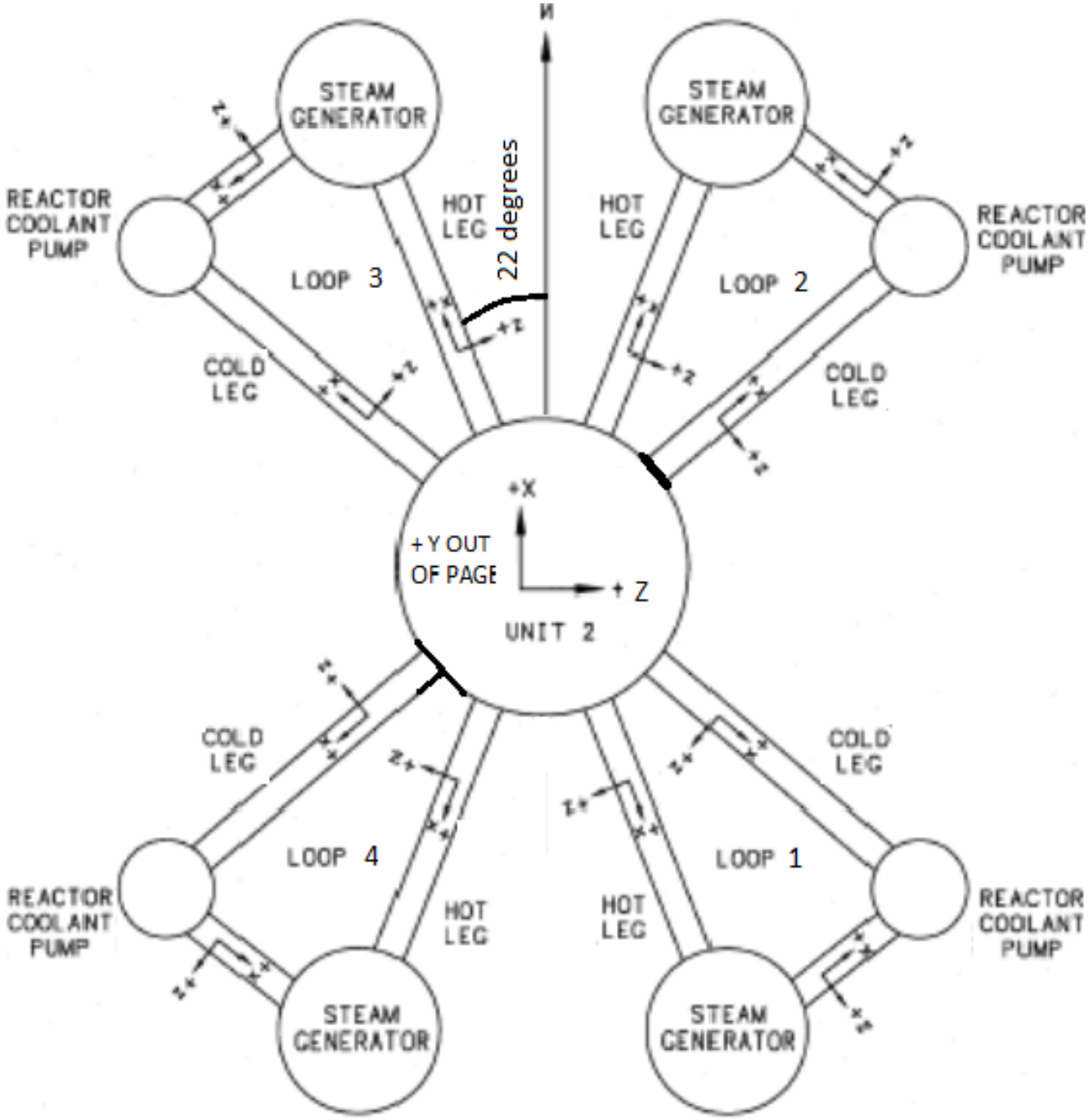

Attachment 2
(Page 5 of 20)

INSTRUMENTED THERMAL MONITORING LOCATIONS AND ACCEPTANCE CRITERIA

NUCLEAR STEAM SUPPLY SYSTEM LOOP, LAYOUT SKETCH FOR THERMAL EXPANSION MONITORING POINTS, APPROXIMATE LOCATIONS

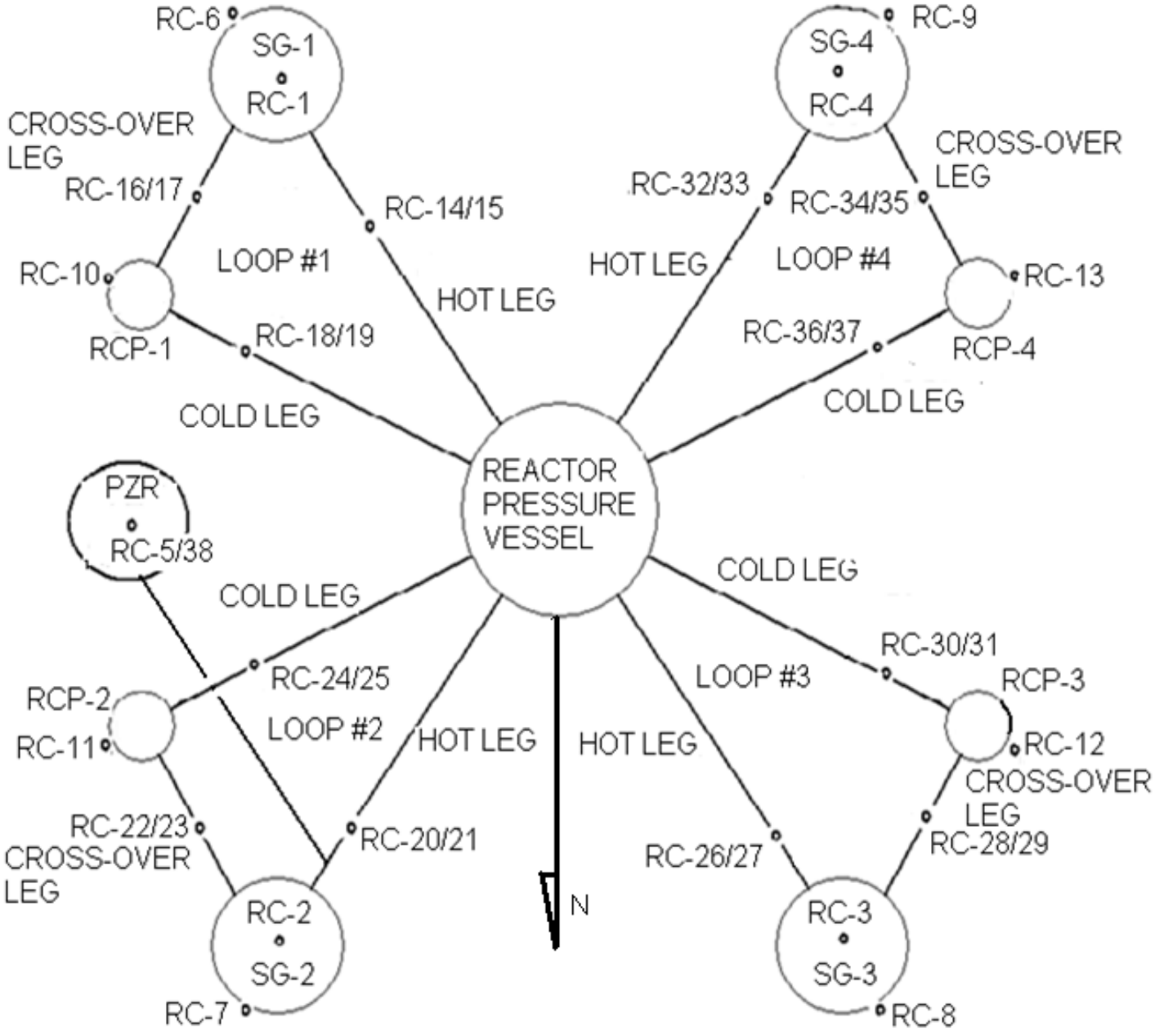

Attachment 2
(Page 6 of 20)

INSTRUMENTED THERMAL MONITORING LOCATIONS AND ACCEPTANCE CRITERIA

This Attachment provides a listing of the locations to be instrumented during the Thermal Monitoring portion of HOT FUNCTIONAL TEST. This Attachment also provides a listing of marked-up flow diagrams and isometrics (Referencing to 2-TSD-HFT-1, Attachment “B”) showing the heat-up boundaries for HOT FUNCTIONAL TEST. The heat-up boundaries involve Systems 01, 03, 15, 62, 63, 68 and 74. The piping isometrics and corresponding analysis were reviewed to determine locations for monitoring. The monitoring locations were determined based on the predicted movement (taken from the latest piping analysis using operating modes which corresponds to HOT FUNCTIONAL TEST temperatures) of the system. The locations were chosen such that a favorable comparison of actual to the predicted values would assure the piping system was moving adequately. Locations chosen had sufficient movement to incorporate the measurement tolerance of 10% or 1/4". Tolerance for the temporary support and instrumentation locations is ± 6” (per RFI-1679).

Monitoring of the above systems (or portions of) shall be performed for temperatures at ambient <105°, 250° (245°-255°), 350° (345°-355°), 450° (445°-455°) and 557°(553°-560°) and return to ambient <105°. The temperature monitoring will require installation of Resistance Temperature Detectors (RTDs) at selected locations to measure temperature which will be used to calculate intermediate plateau expected movements from the maximum displacements provided for the 557° plateau. The 2-TSD-HFT-1, Attachment “B” have been marked up to show the location of RTDs. All of the drawings will be attached to this procedure after completion.

The marked-up flow diagrams and isometrics, referenced here and provided in 2-TSD-HFT-1, Attachment “B” show the thermal monitoring locations and directions, with each location having a unique identifier.

Below is a listing of the flow diagrams and isometric drawings and their corresponding sheet number from 2-TSD-HFT-1, Attachment “B”.

TVA DRAWING NUMBER	ATTACHMENT “B” SHEET NUMBER	TVA DRAWING NUMBER	ATTACHMENT “B” SHEET NUMBER
2-47W406-320	SHEET B-9	47W400-102	SHEET B-40
2-47W406-320B	SHEET B-10	47W400-103	SHEET B-41
2-47W406-321B	SHEET B-11	2-47W465-206	SHEET B-42
2-47W406-321C	SHEET B-12	2-47W465-210	SHEET B-43
2-47W406-332	SHEET B-13	2-47W465-211	SHEET B-44

Attachment 2
(Page 7 of 20)

INSTRUMENTED THERMAL MONITORING LOCATIONS AND ACCEPTANCE CRITERIA

TVA DRAWING NUMBER	ATTACHMENT "B" SHEET NUMBER	TVA DRAWING NUMBER	ATTACHMENT "B" SHEET NUMBER
2-47W406-348	SHEET B-14	2-47W465-212	SHEET B-45
2-47W406-348A	SHEET B-15	2-47W465-218	SHEET B-46
2-47W406-349A	SHEET B-16	2-47W465-224	SHEET B-47
2-47W401-212	SHEET B-17	2-47W465-226	SHEET B-48
2-47W427-216A	SHEET B-18	2-47W465-236	SHEET B-49
2-47W401-223	SHEET B-19	2-47W465-246	SHEET B-50
2-47W401-224	SHEET B-20	47W465-221	SHEET B-51
2-47W401-225	SHEET B-21	2-47W432-215	SHEET B-52
2-47W401-226	SHEET B-22	2-47W435-274	SHEET B-53
2-47W427-208	SHEET B-23	2-47W435-218	SHEET B-54
2-47W427-216	SHEET B-24	2-47W435-253	SHEET B-55
2-47W427-219A	SHEET B-25	2-47W435-255	SHEET B-56
2-47W427-224	SHEET B-26	2-47W435-256	SHEET B-57
2-47W427-231	SHEET B-27	2-47W435-262	SHEET B-58
2-47W427-233	SHEET B-28	2-47W435-263	SHEET B-59
47W401-153	SHEET B-29	2-47W435-264A	SHEET B-60
2-47W400-220	SHEET B-30	2-47W435-267	SHEET B-61
2-47W400-220A	SHEET B-31	2-47W435-267B	SHEET B-62
2-47W400-221	SHEET B-32	2-47W400-212	SHEET B-63
2-47W400-221A	SHEET B-33	2-47W400-227	SHEET B-64

Attachment 2
(Page 8 of 20)

INSTRUMENTED THERMAL MONITORING LOCATIONS AND ACCEPTANCE CRITERIA

TVA DRAWING NUMBER	ATTACHMENT "B" SHEET NUMBER	TVA DRAWING NUMBER	ATTACHMENT "B" SHEET NUMBER
2-47W400-222	SHEET B-34	2-47W400-228	SHEET B-65
2-47W400-222A	SHEET B-35	2-47W400-228A	SHEET B-66
2-47W400-223	SHEET B-36	2-47W400-229	SHEET B-67
2-47W400-223A	SHEET B-37	2-47W400-232	SHEET B-68
47W400-100	SHEET B-38	47W400-17	SHEET B-69
47W400-101	SHEET B-39	2-47W465-236	SHEET B-70

Attachment 2
(Page 9 of 20)

INSTRUMENTED THERMAL MONITORING LOCATIONS AND ACCEPTANCE CRITERIA

THERMAL MONITORING PROGRAM - SYSTEM 001				
NODE NO.	MONITORING LOCATION	PIPING TEMPERATURE (°F)	MONITORING DIRECTION	PREDICTED MOVEMENT (IN.)
11	MS-1	570	Y (Vertical)	+ 1.3716”
15a	MS-2	570	Z (Axial)	+ 1.8972”
22	MS-3	570	X (Lateral)	+ 0.8548”
23a	MS-4	570	Y (Vertical)	- 0.7987”
10	MS-5	570	Y (Vertical)	+ 1.4567”
13a	MS-6	570	Z (Axial)	- 1.7413”
22	MS-7	570	X (Lateral)	+ 0.9885”
24	MS-8	570	Y (Vertical)	- 0.7272”
11	MS-9	570	Y (Vertical)	+ 1.5027”
17	MS-10	570	Z (Axial)	- 2.1203”
21	MS-11	570	X (Lateral)	+ 1.3459”
25	MS-12	570	Y (Vertical)	- 0.5582”
10	MS-13	570	Y (Vertical)	+ 1.4411”
15a	MS-14	570	Z (Axial)	+ 1.9760”
19	MS-15	570	X (Lateral)	+ 1.2281”
20a	MS-16	570	Y (Vertical)	- 0.8978”
236	MS-17	557	X (Lateral)	+ 12.0000”
36	MS-18	557	X (Lateral)	+ 13.0000”
350	MS-19	557	X (Lateral)	+ 8.1300”
170	MS-20	557.3	Z (Lateral)	+ 7.6000”
331	MS-21	557	X (Lateral)	+ 7.8000”
110	MS-22	557	Z (Lateral)	- 7.3000”

Attachment 2
(Page 10 of 20)

INSTRUMENTED THERMAL MONITORING LOCATIONS AND ACCEPTANCE CRITERIA

THERMAL MONITORING PROGRAM - SYSTEM 001				
NODE NO.	MONITORING LOCATION	PIPING TEMPERATURE (°F)	MONITORING DIRECTION	PREDICTED MOVEMENT (IN.)
A402	MS-23	557	X (Lateral)	+ 5.0000”
A402	MS-24	557	Z (Axial)	- 5.6600”
314	MS-25	557	X (Lateral)	+ 5.0000”
314	MS-26	557	Z (Axial)	- 5.9100”
A362	MS-27	557	Y (Vertical)	- 1.5200”
A362	MS-28	557	Z (Lateral)	+ 1.0300”
A538	MS-29	557	Z (Lateral)	+ 2.0000”
A543	MS-30	557	X (Lateral)	- 2.2500”
A567	MS-31	557	Z (Axial)	- 1.3000”
A567	MS-32	557	X (Lateral)	- 1.9000”

NOTES FOR ABOVE TABLE

1) For the piping from the Generator to the Flued Head Anchor load case T_1 provided. This load case evaluates the Main Steam piping hot (570°F) with the relief and safety valve exhaust lines ambient (40/50°F).

2) All monitoring directions are plant global (i.e., North is + Z-direction) unless specified by (*). For locations identified by (*) refer to the isometrics for coordinate definition.

Attachment 2
(Page 11 of 20)

INSTRUMENTED THERMAL MONITORING LOCATIONS AND ACCEPTANCE CRITERIA

THERMAL MONITORING PROGRAM - SYSTEM 03				
NODE NO.	**MONITORING LOCATION**	**PIPING TEMPERATURE (°F)**	**MONITORING DIRECTION**	**PREDICTED MOVEMENT (IN.)**
17	FW-1	579	SX* (Axial)	+ 1.0198”
SH1	FW-2	579	Y (Vertical)	- 0.4951”
34	FW-3	448	Z (Lateral)	- 0.9507”
28	FW-4	580	SX* (Lateral)	+ 1.0930”
40A	FW-5	580	Y (Vertical	+ 0.6810”
48	FW-6	580	Z (Axial)	+ 0.8359”
104	FW-7	542	SZ* (Lateral)	- 1.1612”
	FW-8			NOT USED
X42A	FW-9	448	Z (Lateral)	+ 0.9589”
X48	FW-10	448	X (Lateral)	+ 0.6386”
16	FW-11	542	SX* (Lateral)	+ 0.8975”
4	FW-12	542	Y (Vertical)	- 0.6230”
38	FW-13	542	Z (Lateral)	+ 0.8941”
439	FW-14	580	X (Lateral)	+ 1.3257”
439	FW-15	580	Y (Vertical)	+ 0.8308”
	FW-16			NOT USED
436	FW-17	580	Z (Lateral)	- 0.8581”
8	FW-18	560/80	SZ* (Lateral)	- 0.9469” Support Deleted
8C	FW-19	560/80	Z (Lateral)	+ 0.6388” Support Deleted
3cc (LOOP 3)	FW-20 (LOOP 3)	560/80	X (Axial)	+ 0.7584”
3cc (LOOP 3)	FW-21 (LOOP 3)	560/80	Z (Lateral)	+ 1.4141”

Attachment 2
(Page 12 of 20)

INSTRUMENTED THERMAL MONITORING LOCATIONS AND ACCEPTANCE CRITERIA

THERMAL MONITORING PROGRAM - SYSTEM 03				
NODE NO.	**MONITORING LOCATION**	**PIPING TEMPERATURE (°F)**	**MONITORING DIRECTION**	**PREDICTED MOVEMENT (IN.)**
3cc (LOOP 4)	FW-22 (LOOP 4)	560/80	X (Axial)	+ 0.7539”
3cc (LOOP 4)	FW-23 (LOOP 4)	560/80	Z (Lateral)	- 1.4160

NOTES FOR ABOVE TABLE

1) All monitoring directions are plant global (i.e.. North is + Z-direction) unless specified by (*). For locations identified by (*) refer to Attachment B isometrics for coordinate definition.

2) The valves provided for piping temperature represent the Steam Generator temperature/branch piping temperature. This will simulate approximate actual field conditions during Thermal Expansion Testing. The actual temperature modeled in the analysis is piping hot from the generator to the valves outside containment.

Attachment 2
(Page 13 of 20)

INSTRUMENTED THERMAL MONITORING LOCATIONS AND ACCEPTANCE CRITERIA

THERMAL MONITORING PROGRAM - SYSTEM 15				
NODE NO.	MONITORING LOCATION	PIPING TEMPERATURE (°F)	MONITORING DIRECTION	PREDICTED MOVEMENT (IN.)
6	SGBD-1	557	SX* (Axial)	- 0.5608” SUPPORT DELETED NOT USED FOR TESTING
6	SGBD-2	557	SZ* (Lateral)	- 0.8607” SUPPORT DELETED NOT USED FOR TESTING
29AX	SGBD-3	557	SX* (Axial)	+ 1.0901” SUPPORT DELETED NOT USED FOR TESTING
25	SGBD-4	557	SY* (Vertical)	NOT USED FOR TESTING
25DS	SGBD-4a	557	SZ* (Axial)	+ 1.5868”
W22	SGBD-5	557	X (Lateral)	- 0.6584”
AW21	SGBD-6	557	Z (Lateral)	+ 1.5736”
38	SGBD-7	557	SX* (Lateral)	+4.4957” SUPPORT DELETED NOT USED FOR TESTING
38	SGBD-8	557	SZ* (Axial)	- 3.5779” SUPPORT DELETED NOT USED FOR TESTING
44	SGBD-9	557	SZ* (Axial)	+ 1.6644”
52	SGBD-10	557	SY* (Vertical)	- 0.8433”
V44	SGBD-11	557	Y (Vertical)	+ 0.3236”
	SGBD-12			NOT USED
18G	SGBD-13	557	SY* (Vertical)	+ 0.6081”
34A	SGBD-14	557	Y (Vertical)	- 0.6283”
52B	SGBD-15	557	SX* (Lateral)	+ 4.2207”
69	SGBD-16	557	Y (Vertical)	- 1.2471”
58	SGBD-17	557	SX*(Lateral)	+ 4.0890”
	SGBD-18			NOT USED
	SGBD-19			NOT USED
	SGBD-20			NOT USED
	SGBD-21			NOT USED
143	SGBD-22	557	X (Lateral)	- 1.1356”

Attachment 2
(Page 14 of 20)

INSTRUMENTED THERMAL MONITORING LOCATIONS AND ACCEPTANCE CRITERIA

NOTE FOR ABOVE TABLE
All monitoring directions are plant global (i.e., North is + Z-direction) unless specified by (*). For locations identified by (*) refer to the isometrics for coordinate definition.

Attachment 2
(Page 15 of 20)

INSTRUMENTED THERMAL MONITORING LOCATIONS AND ACCEPTANCE CRITERIA

THERMAL MONITORING PROGRAM - SYSTEM 62				
NODE NO.	MONITORING LOCATION	PIPING TEMPERATURE (°F)	MONITORING DIRECTION	PREDICTED MOVEMENT (IN.)
25	CVCS-1	290	Z (Lateral)	- 0.0861” SUPPORT DELETED
100	CVCS-2	290	SZ* (Lateral)	+ 0.7296”
457	CVCS-3	290	SX* (Lateral)	- 0.9596” SUPPORT DELETED
543	CVCS-4	290	SZ* (Axial)	+1.3237”
8	CVCS-5	560	SZ* (Lateral)	+ 2.1542”
114	CVCS-6	560	SZ* (Axial)	- 0.9446
178	CVCS-7	560	SX* (Lateral)	+ 0.8210”
160	CVCS-8	560	SX* (Lateral)	+ 2.6284”
160	CVCS-9	560	SZ* (Axial)	- 1.1833”
144	CVCS-10	560	SX* (Lateral)	+ 1.4122”
129	CVCS-11	560	SX* (Lateral)	- 0.2603”
A95	CVCS-12	560	SX* (Lateral)	+ 3.5392”
A95	CVCS-13	560	SZ* (Axial)	+ 2.6064”
A92	CVCS-14	560	SX* (Lateral)	+ 2.8029”
A92	CVCS-15	560	SZ* (Axial)	+ 2.6743”
A66	CVCS-16	560	Y (Vertical	+ 1.7592”
17	CVCS-17	560	X (Lateral)	+ 0.7413”
23	CVCS-18	557	SX* (Lateral)	+ 2.0678”
63	CVCS-19	557	X (Lateral)	- 0.2467”
45A	CVCS-20	557	X (Lateral)	- 0.8519”
B35	CVCS-21	557	Y (Vertical)	+ 0.3711”

Attachment 2
(Page 16 of 20)

INSTRUMENTED THERMAL MONITORING LOCATIONS AND ACCEPTANCE CRITERIA

NOTES FOR ABOVE TABLE

1) All monitoring directions are plant global (i.e., North is + Z-direction) unless specified by (*). For locations identified by (*) refer to the isometrics for coordinate definition.
2) For CVCS-1 thru CVCS-4 thermal case T_2 was provided for predicted movements. This load case corresponds to Mode 1B. Maximum Purification (CCP Operating) 100% Power (W/O Relief Valve).
3) For CVCS-5 thru CVCS-7 thermal case T_1 was provided for predicted movements. This load case corresponds to Normal System Operation.
4) For CVCS-8 thru CVCS-11 thermal case T_3 was provided for predicted movements. This load case corresponds to Normal Charging with bypass operating, Alternate Charging not operating.
5) For CVCS-12 thru CVCS-16 thermal case T_2 was provided for predicted movements. This load case corresponds to Alternate Charging operating, Normal Charging not operating.
6) For CVCS-17 thru CVCS-19 thermal case T_3 was provided for predicted movements. This load case corresponds to Normal Operating, Heat-up.
7) For CVCS-20 thru CVCS-21 thermal case T_4 was provided for predicted movements. This load case corresponds to Normal Operating, Heat-up.

Attachment 2
(Page 17 of 20)

INSTRUMENTED THERMAL MONITORING LOCATIONS AND ACCEPTANCE CRITERIA

THERMAL MONITORING PROGRAM - SYSTEM 63				
NODE NO.	MONITORING LOCATION	PIPING TEMPERATURE (°F)	MONITORING DIRECTION	PREDICTED MOVEMENT (IN.)
104B	SIS-1	559/140	X (Axial)	+ 0.9079”
	SIS-1a			NOT USED
261	SIS-2	559/140	SX* (Lateral)	+ 0.6953” SUPPORT DELETED
29	SIS-3	559/140	SX* (Lateral)	- 0.9959”
6B	SIS-4	559/140	SX* (Lateral)	- 0.7704”
15	SIS-5	559/140	SZ* (Lateral)	- 0.8162”
	SIS-6			NOT USED
	SIS-7			NOT USED
64	SIS-8	559/140	SX* (Axial)	- 0.6446” SUPPORT DELETED
46S	SIS-9	559/140	Y (Vertical)	+ 0.3523”
72A	SIS-10	559/140	SX* (Lateral)	+ 0.4912”
141	SIS-11	559/60	SX* (Axial)	- 1.1416”
141	SIS-11a	559/60	SZ* (Lateral)	+ 0.4564”
127	SIS-12	559/60	SZ* (Lateral)	- 0.6812”
A15	SIS-13	559/60	SX* (Lateral)	- 0.9222” SUPPORT DELETED
103	SIS-14	559/60	SZ* (Lateral)	+ 0.9033”
24	SIS-15	559/90	Z (Lateral)	+ 1.2699”
59B	SIS-16	559/90	SX* (Lateral)	+ 0.6019”
7	SIS-17	617/120	SZ* (Axial)	+ 0.9169”
C04A	SIS-18	617/120	SZ* (Lateral)	+ 0.8713” SUPPORT DELETED
11B	SIS-19	617/90	Y (Vertical)	+ 0.4105”
91B	SIS-20	617/90	Z (Lateral)	- 0.7609”
105	SIS-21	617/90	SX* (Lateral)	+ 0.4311”

NOTES FOR ABOVE TABLE

1) All monitoring directions are plant global (i.e.. North is + Z-direction) unless specified by (*). For locations identified by (*) refer to Attachment B isometrics for coordinate definition.
2) The valves provided for piping temperature represent the primary loop temperature/branch piping temperature. This will simulate approximate actual field conditions during Thermal Expansion Testing.

Attachment 2
(Page 18 of 20)

INSTRUMENTED THERMAL MONITORING LOCATIONS AND ACCEPTANCE CRITERIA

THERMAL MONITORING PROGRAM - SYSTEM 68				
NODE NO.	**MONITORING LOCATION**	**PIPING TEMPERATURE (°F)**	**MONITORING DIRECTION**	**PREDICTED MOVEMENT (IN.)**
7A	RCS-1	650	X (Lateral)	SURGE LINE
1250	RCS-2	650	Z (Lateral)	-2.212”
5E	RCS-3	558	Y (Vertical)	+ 2.6907”
63A	RCS-4	558	X (Lateral)	- 1.8008”
51	RCS-5	558	SX* (Lateral)	- 0.7884”
60	RCS-6	558	Z (Axial)	+ 1.1741”
36	RCS-7	558	Y (Vertical)	+ 0.7693”
58	RCS-8	653/130	Y (Vertical)	+ 2.8193”
76A	RCS-9	653/130	Y (Vertical)	+ 2.7680”
97A	RCS-10	653/130	Y (Vertical)	+ 2.7166”
92	RCS-11	653/130	Z (Axial)	- 0.2539”
9	RCS-12	653/130	Y (Vertical)	+ 2.5554”
9	RCS-12a	653/130	SZ* (Lateral)	+ 0.3065”
R5A	RCS-13	653/130	Y (Vertical)	+ 4.6356”
10A (LOOP 1)	RCS-14	558/130	SZ* (Lateral)	+ 1.4031”
10A (LOOP 2)	RCS-15	653/130	SZ* (Lateral)	+ 1.0580”
10A (LOOP 4)	RCS-16	653/120	SZ* (Lateral)	- 0.7987”
485	RCS-17	560	X (Lateral)	- 0.3299”
593	RCS-18	560	X (Lateral)	- 0.8566”
130	RCS-19	560	Z (Axial)	- 0.7212”
242	RCS-20	560	X (Lateral)*	- 0.9321”
402	RCS-21	618/130	Y (Vertical	+ 1.8255”
	RCS-22			NOT USED
415A	RCS-23	618/130	SZ* (Lateral)	+ 0.2618”
137	RCS-24	653	Y (Vertical)	+ 2.6702”

Attachment 2
(Page 19 of 20)

INSTRUMENTED THERMAL MONITORING LOCATIONS AND ACCEPTANCE CRITERIA

NOTES FOR ABOVE TABLE

1) All monitoring directions are plant global (i.e., North is + Z-direction) unless specified by (*). For locations identified by (*) refer to Attachment B isometrics for coordinate definition.
2) For monitoring locations RCS-8 thru RCS-13 thermal case T_2 is presented. This load case models the pressurizer hot (653°F) with the downstream piping temperature ambient (130°F). This will represent plant normal operating conditions.
3) For monitoring locations RCS-14 thru RCS-16 thermal case T_2 is presented. This load case models the primary loop hot (558°F) with the downstream piping temperature ambient (120/130°F).
4) For monitoring locations RCS-17 thru RCS-20 thermal case T_2 is presented. This load case models the entire piping at (560°F).
5) For monitoring locations RCS-21 thru RCS-23 thermal case T_1 is presented. This load case models the reactor hot (618°F) with the downstream piping temperature ambient (130°F). This downstream piping is beyond the FCV's.

Attachment 2
(Page 20 of 20)

INSTRUMENTED THERMAL MONITORING LOCATIONS AND ACCEPTANCE CRITERIA

THERMAL MONITORING PROGRAM - SYSTEM 74				
NODE NO.	**MONITORING LOCATION**	**PIPING TEMPERATURE (°F)**	**MONITORING DIRECTION**	**PREDICTED MOVEMENT (IN.)**
17A	RHR-1	350	SX* (Lateral)	+ 1.4846”
13A	RHR-2	350	SZ* (Axial)	-0.7466”
9	RHR-3	350	SX* (Lateral)	- 0.7604” SUPPORT DELETED
34A	RHR-4	350/120	Z (Lateral)	- 1.1988”
Z18S	RHR-5	350	Z (Lateral)	- 0.7721”

NOTES

1) All monitoring directions are plant global (i.e., North is + Z-direction) unless specified by (*). For locations identified by (*) refer to Attachment B isometrics for coordinate definition.
2) For monitoring locations RHR-1 thru RHR-3 thermal case T_2 is presented. This load case models the primary loop and the loop attached piping at (350°F).
3) For monitoring locations RHR-4 thru RHR-5 thermal case T_2 is presented. This load case models the primary loop at 350°F and the loop attached piping at (350/120°F).

Attachment 3
(Page 1 of 18)

INSTRUMENTED THERMAL MONITORING POINTS AMBIENT TEMPERATURE (<105°F) DATA READINGS

Date _____

NUCLEAR STEAM SUPPLY SYSTEM LOOP MONITORING POINTS									
MONITOR POINT ID	SYS	LOCATION	DIRECTION	PREDICTED TEMP °F AT PLATEAU	ACTUAL TEMP °F	MAXIMUM PREDICTED MOVEMENT AT 557°F	CALCULATED MOVEMENT AT ACTUAL READING	INITIAL/ DATE	COMMENTS
RC-1	068	TOP S.G. #1	+Y	<105		+2.739”			
RC-2	068	TOP S.G. #2	+Y	<105		+2.739”			
RC-3	068	TOP S.G. #3	+Y	<105		+2.739”			
RC-4	068	TOP S.G. #4	+Y	<105		+2.739”			
RC-5	068	PZR TOP	+Y	<105		+2.68”			
RC-6	068	TOP S.G. #1	-X	<105		-1.794”			
RC-7	068	TOP S.G. #2	+X	<105		+1.794”			
RC-8	068	TOP S.G. #3	+X	<105		+1.794”			
RC-9	068	TOP S.G. #4	-X	<105		-1.794”			
RC-10	068	RCP #1	-X	<105		-1.31”			
RC-11	068	RCP #2	+X	<105		+1.31”			
RC-12	068	RCP #3	+X	<105		+1.31”			
RC-13	068	RCP #4	-X	<105		-1.31”			
RC-14	068	HOT LEG #1	+Z	<105		+0.3”			
RC-15	068	HOT LEG #1	+Y	<105		+0.034”			
RC-16	068	CROSS-OVER LEG #1	+Z	<105		+0.873”			
RC-17	068	CROSS-OVER LEG #1	+Y	<105		-0.677”			
RC-18	068	COLD LEG #1	+Z	<105		+0.866”			

Attachment 3
(Page 2 of 18)

INSTRUMENTED THERMAL MONITORING POINTS AMBIENT TEMPERATURE (<105°F) DATA READINGS

Date _____

NUCLEAR STEAM SUPPLY SYSTEM LOOP MONITORING POINTS									
MONITOR POINT ID	SYS	LOCATION	DIRECTION	PREDICTED TEMP °F AT PLATEAU	ACTUAL TEMP °F	MAXIMUM PREDICTED MOVEMENT AT 557°F	CALCULATED MOVEMENT AT ACTUAL READING	INITIAL/ DATE	COMMENTS
RC-19	068	COLD LEG #1	-Y	<105		-0.023”			
RC-20	068	HOT LEG #2	+Z	<105		+0.3”			
RC-21	068	HOT LEG #2	+Y	<105		+0.034”			
RC-22	068	CROSS-OVER LEG #2	+Z	<105		+0.873”			
RC-23	068	CROSS-OVER LEG #2	+Y	<105		-0.677”			
RC-24	068	COLD LEG #2	+Z	<105		+0.866”			
RC-25	068	COLD LEG #2	-Y	<105		-0.023”			
RC-26	068	HOT LEG #3	-Z	<105		-0.3”			
RC-27	068	HOT LEG #3	+Y	<105		+0.034”			
RC-28	068	CROSS-OVER LEG #3	-Z	<105		-0.873"			
RC-29	068	CROSS-OVER LEG #3	+Y	<105		-0.677”			
RC-30	068	COLD LEG #3	-Z	<105		-0.866”			
RC-31	068	COLD LEG #3	-Y	<105		-0.023”			
RC-32	068	HOT LEG #4	-Z	<105		-0.3”			
RC-33	068	HOT LEG #4	+Y	<105		+0.034”			
RC-34	068	CROSS-OVER LEG #4	-Z	<105		-0.873”			
RC-35	068	CROSS-OVER LEG #4	+Y	<105		-0.667”			

Attachment 3
(Page 3 of 18)

INSTRUMENTED THERMAL MONITORING POINTS AMBIENT TEMPERATURE (<105°F) DATA READINGS

Date _____

NUCLEAR STEAM SUPPLY SYSTEM LOOP MONITORING POINTS									
MONITOR POINT ID	SYS	LOCATION	DIRECTION	PREDICTED TEMP °F AT PLATEAU	ACTUAL TEMP °F	MAXIMUM PREDICTED MOVEMENT AT 557°F	CALCULATED MOVEMENT AT ACTUAL READING	INITIAL/ DATE	COMMENTS
RC-36	068	COLD LEG #4	-Z	<105		-0.866”			
RC-37	068	COLD LEG #4	-Y	<105		-0.023”			
RC-38	068	PZR TOP	+X	<105		+0.18”			

Attachment 3
(Page 4 of 18)

INSTRUMENTED THERMAL MONITORING POINTS AMBIENT TEMPERATURE (<105°F) DATA READINGS

Date _____

ALL OTHER SYSTEM MONITORING POINTS										
MONITOR POINT ID	SYS	LOCATION	ELEV.	DIRECTION	PREDICTED TEMP °F AT PLATEAU	ACTUAL TEMP °F	MAXIMUM PREDICTED MOVEMENT AT 557°F	CALCULATED MOVEMENT AT ACTUAL READING	INITIAL/ DATE	COMMENTS
MS-1	001	INSIDE CRANE WALL/AZ4	761’	Y (VERTICAL)	<105		+1.3716”			
MS-2	001	INSIDE CRANE WALL/AZ4	737’	Z (AXIAL)	<105		+1.8972”			
MS-3	001	INSIDE CRANE WALL/AZ5	733’	X (LATERAL)	<105		+0.8548”			
MS-4	001	INSIDE CRANE WALL/AZ10	733’	Y (VERTICAL)	<105		-0.7987”			
MS-5	001	INSIDE CRANE WALL/AZ175	761’	Y (VERTICAL)	<105		+1.4567”			
MS-6	001	INSIDE CRANE WALL/AZ175	744’	Z (AXIAL)	<105		-1.7413”			
MS-7	001	INSIDE CRANE WALL/AZ169	737’	X (LATERAL)	<105		+0.9885”			
MS-8	001	INSIDE CRANE WALL/AZ169	737’	Y (VERTICAL)	<105		-0.7272”			
MS-9	001	INSIDE CRANE WALL/AZ183	756’	Y (VERTICAL)	<105		+1.5027”			
MS-10	001	INSIDE CRANE WALL/AZ184	738’	Z (AXIAL)	<105		-2.1203”			

Attachment 3
(Page 5 of 18)

INSTRUMENTED THERMAL MONITORING POINTS AMBIENT TEMPERATURE (<105°F) DATA READINGS

Date _____

ALL OTHER SYSTEM MONITORING POINTS										
MONITOR POINT ID	SYS	LOCATION	ELEV.	DIRECTION	PREDICTED TEMP °F AT PLATEAU	ACTUAL TEMP °F	MAXIMUM PREDICTED MOVEMENT AT 557°F	CALCULATED MOVEMENT AT ACTUAL READING	INITIAL/ DATE	COMMENTS
MS-11	001	INSIDE CRANE WALL/AZ169	737’	X (LATERAL)	<105		+1.3459”			
MS-12	001	INSIDE CRANE WALL/AZ171	737’	Y (VERTICAL)	<105		-0.5582”			
MS-13	001	INSIDE CRANE WALL/AZ171	760’	Y (VERTICAL)	<105		+1.4411”			
MS-14	001	INSIDE CRANE WALL/AZ171	737’	Z (AXIAL)	<105		+1.9760”			
MS-15	001	OUTSIDE CRANE WALL/AZ171	737’	X (LATERAL)	<105		+12281”			
MS-16	001	OUTSIDE CRANE WALL/AZ171	737’	Y (VERTICAL)	<105		-0.8978”			
MS-17	001	OUTSIDE CRANE WALL/AZ89	737’	X (LATERAL)	<105		+12.0000”			
MS-18	001	OUTSIDE CRANE WALL/AZ89	737’	X (LATERAL)	<105		+13.0000”			
MS-19	001	K-T15	723’	X (LATERAL)	<105		+8.1300”			
MS-20	001	K-T15	723’	Z (LATERAL)	<105		+7.6000”			
MS-21	001	K-T15	723’	X (LATERAL)	<105		+7.8000”			
MS-22	001	K-T15	723’	Z (LATERAL)	<105		-7.3000”			

Attachment 3
(Page 6 of 18)

INSTRUMENTED THERMAL MONITORING POINTS AMBIENT TEMPERATURE (<105°F) DATA READINGS

Date _____

ALL OTHER SYSTEM MONITORING POINTS										
MONITOR POINT ID	SYS	LOCATION	ELEV.	DIRECTION	PREDICTED TEMP °F AT PLATEAU	ACTUAL TEMP °F	MAXIMUM PREDICTED MOVEMENT AT 557°F	CALCULATED MOVEMENT AT ACTUAL READING	INITIAL/ DATE	COMMENTS
MS-23	001	M-T15	722’	X (LATERAL)	<105		+5.0000”			
MS-24	001	M-T15	722’	Z (AXIAL)	<105		-5.6600”			
MS-25	001	M-T15	723’	X (LATERAL)	<105		+5.0000			
MS-26	001	M-T15	723’	Z (AXIAL)	<105		-5.9100”			
MS-27	001	J-T12	718’	Y (VERTICAL)	<105		-1.5200”			
MS-28	001	J-T12	718’	Z (LATERAL)	<105		+1.0300”			
MS-29	001	J-T10	727’	Z (LATERAL)	<105		+2.0000”			
MS-30	001	J-T10	718’	X (LATERAL)	<105		-2.2500”			
MS-31	001	G-T10	753’	Z-(AXIAL)	<105		-1.3000”			
MS-32	001	G-T10	753’	X (LATERAL)	<105		-1.9000”			

Attachment 3
(Page 7 of 18)

INSTRUMENTED THERMAL MONITORING POINTS AMBIENT TEMPERATURE (<105°F) DATA READINGS

Date _____

ALL OTHER SYSTEM MONITORING POINTS										
MONITOR POINT ID	SYS	LOCATION	ELEV.	DIRECTION	PREDICTED TEMP °F AT PLATEAU	ACTUAL TEMP °F	MAXIMUM PREDICTED MOVEMENT AT 557°F	CALCULATED MOVEMENT AT ACTUAL READING	INITIAL/ DATE	COMMENTS
FW-1	003	AZ21	759’	SX* (AXIAL)	<105		+1.0198”			
FW-2	003	SOUTH VALVE ROOM/U-6	737’	Y (VERTICAL)	<105		-0.4951”			
FW-3	003	SOUTH VALVE ROOM/U-6	737’	Z (LATERAL)	<105		-0.9507”			
FW-4	003	INSIDE CRANE WALL/AZ280	759’	SX* (LATERAL)	<105		+1.0930”			
FW-5	003	INSIDE CRANE WALL/AZ352	754’	Y (VERTICAL)	<105		+0.6810”			
FW-6	003	INSIDE CRANE WALL/AZ352	733’	Z (AXIAL)	<105		+0.8359”			
FW-7	003	INSIDE CRANE WALL/AZ199	759’	SX* (LATERAL)	<105		-1.1612”			
FW-9	003	H-A15	734’	Z (LATERAL)	<105		+0.9589”			
FW-10	003	H-A15	730’	X (LATERAL)	<105		+0.6386”			
FW-11	003	AZ100	759’	SX* (LATERAL)	<105		+0.8975”			
FW-12	003	AZ100	737’	Y (VERTICAL)	<105		-0.6230”			
FW-13	003	AZ170	737’	Z (LATERAL)	<105		+0.8941”			

Attachment 3
(Page 8 of 18)

INSTRUMENTED THERMAL MONITORING POINTS AMBIENT TEMPERATURE (<105°F) DATA READINGS

Date _____

ALL OTHER SYSTEM MONITORING POINTS										
MONITOR POINT ID	SYS	LOCATION	ELEV.	DIRECTION	PREDICTED TEMP °F AT PLATEAU	ACTUAL TEMP °F	MAXIMUM PREDICTED MOVEMENT AT 557°F	CALCULATED MOVEMENT AT ACTUAL READING	INITIAL/ DATE	COMMENTS
FW-14	003	U-A14	752’	X (LATERAL)	<105		+1.3257”			
FW-15	003	U-A14	752’	Y (VERTICAL)	<105		+0.8308”			
FW-17	003	U-A14	748’	Z (LATERAL)	<105		-0.8581”			
FW-20 (LOOP3)	003	CRANE WALL/AZ188	726’	X (AXIAL)	<105		+0.7584”			
FW-21 (LOOP3)	003	CRANE WALL/AZ188	726’	Z (LATERAL)	<105		+1.4141”			
FW-22 (LOOP4)	003	CRANE WALL/AZ352	726’	X (AXIAL)	<105		+0.7539”			
FW-23 (LOOP4)	003	CRANE WALL/AZ352	726’	Z (LATERAL)	<105		-1.4160”			

Attachment 3
(Page 9 of 18)

INSTRUMENTED THERMAL MONITORING POINTS AMBIENT TEMPERATURE (<105°F) DATA READINGS

Date _____

ALL OTHER SYSTEM MONITORING POINTS										
MONITOR POINT ID	SYS	LOCATION	ELEV.	DIRECTION	PREDICTED TEMP °F AT PLATEAU	ACTUAL TEMP °F	MAXIMUM PREDICTED MOVEMENT AT 557°F	CALCULATED MOVEMENT AT ACTUAL READING	INITIAL /DATE	COMMENTS
SGBD-4A	015	INSIDE CRANE WALL/AZ135	728’	SZ* (AXIAL)	<105		+1.5868”			
SGBD-5	015	INSIDE CRANE WALL/AZ175	728’	X (LATERAL)	<105		-0.6584”			
SGBD-6	015	INSIDE CRANE WALL/AZ162	730’	Z (LATERAL)	<105		+1.5736”			
SGBD-9	015	INSIDE CRANE WALL/AZ59	709’	SZ* (AXIAL)	<105		+1.6644”			
SGBD-10	015	INSIDE CRANE WALL/AZ14	709’	SY* (VERTICAL)	<105		-0.8433			
SGBD-11	015	INSIDE CRANE WALL/AZ137	733’	Y (VERTICAL)	<105		+0.3236”			
SGBD-13	015	INSIDE CRANE WALL/AZ185	733’	SY* (VERTICAL)	<105		+0.6081”			
SGBD-14	015	INSIDE CRANE WALL/AZ200	708’	Y (VERTICAL)	<105		-0.6283”			
SGBD-15	015	INSIDE CRANE WALL/AZ126	708’	SX* (LATERAL)	<105		+4.2207”			
SGBD-16	015	INSIDE CRANE WALL/AZ10	708’	Y (VERTICAL)	<105		-1.2471”			

Attachment 3
(Page 10 of 18)

INSTRUMENTED THERMAL MONITORING POINTS AMBIENT TEMPERATURE (<105°F) DATA READINGS

Date _____

ALL OTHER SYSTEM MONITORING POINTS										
MONITOR POINT ID	SYS	LOCATION	ELEV.	DIRECTION	PREDICTED TEMP °F AT PLATEAU	ACTUAL TEMP °F	MAXIMUM PREDICTED MOVEMENT AT 557°F	CALCULATED MOVEMENT AT ACTUAL READING	INITIAL /DATE	COMMENTS
SGBD-17	015	INSIDE CRANE WALL/AZ60	708’	SX* (LATERAL)	<105		+4.0890”			
SGBD-22	015	OUTSIDE CRANE WALL/U-A15	745’	X (LATERAL)	<105		-1.1356”			

Attachment 3
(Page 11 of 18)

INSTRUMENTED THERMAL MONITORING POINTS AMBIENT TEMPERATURE (<105°F) DATA READINGS

Date _____

ALL OTHER SYSTEM MONITORING POINTS										
MONITOR POINT ID	SYS	LOCATION	ELEV.	DIRECTION	PREDICTED TEMP °F AT PLATEAU	ACTUAL TEMP °F	MAXIMUM PREDICTED MOVEMENT AT 557°F	CALCULATED MOVEMENT AT ACTUAL READING	INITIAL/ DATE	COMMENTS
CVCS-2	062	INSIDE CRANE WALL/AZ81	703’	SZ* (LATERAL)	<105		+0.7296”			
CVCS-4	062	INSIDE CRANE WALL/AZ329	712’	SZ* (AXIAL)	<105		+1.3237”			
CVCS-5	062	INSIDE CRANE WALL/AZ125	711’	SZ* (LATERAL)	<105		+2.1542”			
CVCS-6	062	INSIDE CRANE WALL/AZ152	727’	SZ* (AXIAL)	<105		-0.9446”			
CVCS-7	062	INSIDE CRANE WALL/AZ123	718’	SX* (LATERAL)	<105		+0.8210”			
CVCS-8	062	INSIDE CRANE WALL/AZ43	727’	SX* (LATERAL)	<105		+2.6284”			
CVCS-9	062	INSIDE CRANE WALL/AZ43	727’	SZ* (AXIAL)	<105		-1.1833”			
CVCS-10	062	INSIDE CRANE WALL/AZ95	729’	SX* (LATERAL)	<105		+1.4122”			
CVCS-11	062	INSIDE CRANE WALL/AZ128	728’	SX* (LATERAL)	<105		-0.2603”			
CVCS-12	062	INSIDE CRANE WALL/AZ328	727’	SX* (LATERAL)	<105		+3.592”			

Attachment 3
(Page 12 of 18)

INSTRUMENTED THERMAL MONITORING POINTS AMBIENT TEMPERATURE (<105°F) DATA READINGS

Date _____

ALL OTHER SYSTEM MONITORING POINTS										
MONITOR POINT ID	SYS	LOCATION	ELEV.	DIRECTION	PREDICTED TEMP °F AT PLATEAU	ACTUAL TEMP °F	MAXIMUM PREDICTED MOVEMENT AT 557°F	CALCULATED MOVEMENT AT ACTUAL READING	INITIAL/ DATE	COMMENTS
CVCS-13	062	INSIDE CRANE WALL/AZ328	727’	SZ* (AXIAL)	<105		+2.6064”			
CVCS-14	062	INSIDE CRANE WALL/AZ343	727’	SX* (LATERAL)	<105		+2.8029”			
CVCS-15	062	INSIDE CRANE WALL/AZ343	727’	SZ* (AXIAL)	<105		+2.6743”			
CVCS-16	062	INSIDE CRANE WALL/AZ107	730’	Y (VERTICAL)	<105		+1.7592”			
CVCS-17	062	INSIDE CRANE WALL/AZ210	726’	X (LATERAL)	<105		+0.7413”			
CVCS-18	062	INSIDE CRANE WALL/AZ210	727’	SX* (LATERAL)	<105		+2.0678”			
CVCS-20	062	INSIDE CRANE WALL/AZ150	728’	X (LATERAL)	<105		-0.8519”			
CVCS-21	062	INSIDE CRANE WALL/AZ178	728’	Y (VERTICAL)	<105		+0.3711”			

Attachment 3
(Page 13 of 18)

INSTRUMENTED THERMAL MONITORING POINTS AMBIENT TEMPERATURE (<105°F) DATA READINGS

Date _____

ALL OTHER SYSTEM MONITORING POINTS										
MONITOR POINT ID	SYS	LOCATION	ELEV.	DIRECTION	PREDICTED TEMP °F AT PLATEAU	ACTUAL TEMP °F	MAXIMUM PREDICTED MOVEMENT AT 557°F	CALCULATED MOVEMENT AT ACTUAL READING	INITIAL/ DATE	COMMENTS
SIS-1	063	INSIDE CRANE WALL/AZ321	725’	X (AXIAL)	<105		+0.9079”			
SIS-3	063	INSIDE CRANE WALL/AZ40	726’	SX* (LATERAL)	<105		-0.9959”			
SIS-4	063	INSIDE CRANE WALL/AZ42	725’	SX* (LATERAL)	<105		-0.7704”			
SIS-5	063	INSIDE CRANE WALL/AZ32	723’	SZ* (LATERAL)	<105		-0.8162”			
SIS-9	063	INSIDE CRANE WALL/AZ221	728’	Y (VERTICAL)	<105		+0.3523”			
SIS-10	063	INSIDE CRANE WALL/AZ218	723’	SX* (LATERAL)	<105		+0.4912”			
SIS-11	063	INSIDE CRANE WALL/AZ302	722’	SX* (AXIAL)	<105		-1.1416”			
SIS-11A	063	INSIDE CRANE WALL/AZ302	722’	SZ* (LATERAL)	<105		+0.4564”			
SIS-12	063	INSIDE CRANE WALL/AZ300	725’	SZ* (LATERAL)	<105		-0.6812”			
SIS-14	063	INSIDE CRANE WALL/AZ42	729’	SZ* (LATERAL)	<105		+0.9033”			

Attachment 3
(Page 14 of 18)

INSTRUMENTED THERMAL MONITORING POINTS AMBIENT TEMPERATURE (<105°F) DATA READINGS

Date _____

ALL OTHER SYSTEM MONITORING POINTS										
MONITOR POINT ID	SYS	LOCATION	ELEV.	DIRECTION	PREDICTED TEMP °F AT PLATEAU	ACTUAL TEMP °F	MAXIMUM PREDICTED MOVEMENT AT 557°F	CALCULATED MOVEMENT AT ACTUAL READING	INITIAL/ DATE	COMMENTS
SIS-15	063	INSIDE CRANE WALL/AZ225	720’	Z (LATERAL)	<105		+1.2699”			
SIS-16	063	INSIDE CRANE WALL/AZ135	722’	SX* (LATERAL)	<105		+0.6019”			
SIS-17	063	INSIDE CRANE WALL/AZ197	721’	SZ* (AXIAL)	<105		+0.9169”			
SIS-19	063	INSIDE CRANE WALL/AZ188	725’	Y (VERTICAL)	<105		+0.4105”			
SIS-20	063	INSIDE CRANE WALL/AZ37	725’	Z (LATERAL)	<105		-0.7609”			
SIS-21	063	INSIDE CRANE WALL/AZ35	731’	SX* (LATERAL)	<105		+0.4311”			

Attachment 3
(Page 15 of 18)

INSTRUMENTED THERMAL MONITORING POINTS AMBIENT TEMPERATURE (<105°F) DATA READINGS

Date _____

ALL OTHER SYSTEM MONITORING POINTS										
MONITOR POINT ID	SYS	LOCATION	ELEV.	DIRECTION	PREDICTED TEMP °F AT PLATEAU	ACTUAL TEMP °F	MAXIMUM PREDICTED MOVEMENT AT 557°F	CALCULATED MOVEMENT AT ACTUAL READING	INITIAL/ DATE	COMMENTS
RCS-1	068	INSIDE CRANE WALL/AZ109	722’	X (LATERAL)	<105		SURGE LINE			
RCS-2	068	INSIDE CRANE WALL/AZ92	723’	Z (LATERAL)	<105		-2.212”			
RCS-3	068	INSIDE CRANE WALL/AZ104	783’	Y (VERTICAL)	<105		+2.6907”			
RCS-4	068	INSIDE CRANE WALL/AZ34	720’	X (LATERAL)	<105		-1.8008”			
RCS-5	068	INSIDE CRANE WALL/AZ98	733’	SX* (LATERAL)	<105		-0.7884”			
RCS-6	068	INSIDE CRANE WALL/AZ95	720’	Z (AXIAL)	<105		+1.1741”			
RCS-7	068	INSIDE CRANE WALL/AZ104	733’	Y (VERTICAL)	<105		+0.7693”			
RCS-8	068	INSIDE CRANE WALL/AZ92	777’	Y (VERTICAL)	<105		+2.8193”			
RCS-9	068	INSIDE CRANE WALL/AZ90	778’	Y (VERTICAL)	<105		+2.7680”			
RCS-10	068	INSIDE CRANE WALL/AZ135	776’	Y (VERTICAL)	<105		+2.7166”			

Attachment 3
(Page 16 of 18)

INSTRUMENTED THERMAL MONITORING POINTS AMBIENT TEMPERATURE (<105°F) DATA READINGS

Date _____

ALL OTHER SYSTEM MONITORING POINTS										
MONITOR POINT ID	SYS	LOCATION	ELEV.	DIRECTION	PREDICTED TEMP °F AT PLATEAU	ACTUAL TEMP °F	MAXIMUM PREDICTED MOVEMENT AT 557°F	CALCULATED MOVEMENT AT ACTUAL READING	INITIAL/ DATE	COMMENTS
RCS-11	068	INSIDE CRANE WALL/AZ104	761’	Z (AXIAL)	<105		-0.2539”			
RCS-12	068	INSIDE CRANE WALL/AZ87	747’	Y (VERTICAL)	<105		+2.5554”			
RCS-12A	068	INSIDE CRANE WALL/AZ87	747’	SZ* (LATERAL)	<105		+0.3065”			
RCS-13	068	INSIDE CRANE WALL/AZ99	781’	Y (VERTICAL)	<105		+4.6356”			
RCS-14	068	INSIDE CRANE WALL/AZ41	704’	SZ* (LATERAL)	<105		+1.4031”			
RCS-15	068	INSIDE CRANE WALL/AZ141	704’	SZ* (LATERAL)	<105		+1.0580”			
RCS-16	068	INSIDE CRANE WALL/AZ322	704’	SZ* (LATERAL)	<105		-0.7987”			
RCS-17	068	INSIDE CRANE WALL/AZ200	723’	X (LATERAL)	<105		-0.3299”			
RCS-18	068	INSIDE CRANE WALL/AZ300	722’	X (LATERAL)	<105		-0.8566”			
RCS-19	068	INSIDE CRANE WALL/AZ200	723’	Z (AXIAL)	<105		-0.7212”			

Attachment 3
(Page 17 of 18)

INSTRUMENTED THERMAL MONITORING POINTS AMBIENT TEMPERATURE (<105°F) DATA READINGS

Date _____

ALL OTHER SYSTEM MONITORING POINTS										
MONITOR POINT ID	SYS	LOCATION	ELEV.	DIRECTION	PREDICTED TEMP °F AT PLATEAU	ACTUAL TEMP °F	MAXIMUM PREDICTED MOVEMENT AT 557°F	CALCULATED MOVEMENT AT ACTUAL READING	INITIAL/ DATE	COMMENTS
RCS-20	068	INSIDE CRANE WALL/AZ308	722’	X (LATERAL)*	<105		-0.9321”			
RCS-21	068	INSIDE CRANE WALL/AZ151	755’	Y (VERTICAL)	<105		+1.8255”			
RCS-23	068	INSIDE CRANE WALL/AZ151	752'	SZ* (LATERAL)	<105		+0.2618”			
RCS-24	068	INSIDE CRANE WALL/AZ104	775’	Y (VERTICAL)	<105		+2.6702			

Attachment 3
(Page 18 of 18)

INSTRUMENTED THERMAL MONITORING POINTS AMBIENT TEMPERATURE (<105°F) DATA READINGS

Date _____

ALL OTHER SYSTEM MONITORING POINTS										
MONITOR POINT ID	SYS	LOCATION	ELEV.	DIRECTION	PREDICTED TEMP °F AT PLATEAU	ACTUAL TEMP °F	MAXIMUM PREDICTED MOVEMENT AT 557°F	CALCULATED MOVEMENT AT ACTUAL READING	INITIAL /DATE	COMMENTS
RHR-1	074	INSIDE CRANE WALL/AZ351	707’	SX* (LATERAL)	<105		+1.4846”			
RHR-2	074	INSIDE CRANE WALL/AZ322	707’	SZ* (AXIAL)	<105		-0.7466”			
RHR-4	074	INSIDE CRANE WALL/AZ349	719’	Z (LATERAL)	<105		-1.1988”			
RHR-5	074	V-A11	718	Z (LATERAL)	<105		-0.7721”			

Attachment 4
(Page 1 of 18)

INSTRUMENTED THERMAL MONITORING POINTS 250° (245°-255°) TEMPERATURE DATA READINGS

Date _____

NUCLEAR STEAM SUPPLY SYSTEM LOOP MONITORING POINTS									
MONITOR POINT ID	SYS	LOCATION	DIRECTION	PREDICTED TEMP °F AT PLATEAU	ACTUAL TEMP °F	MAXIMUM PREDICTED MOVEMENT AT 557°F	CALCULATED MOVEMENT AT ACTUAL READING	INITIAL/ DATE	COMMENTS
RC-1	068	TOP S.G. #1	+Y	250°(245°-255°)		+2.739”			
RC-2	068	TOP S.G. #2	+Y	250°(245°-255°)		+2.739”			
RC-3	068	TOP S.G. #3	+Y	250°(245°-255°)		+2.739”			
RC-4	068	TOP S.G. #4	+Y	250°(245°-255°)		+2.739”			
RC-5	068	PZR TOP	+Y	250°(245°-255°)		+2.68”			
RC-6	068	TOP S.G. #1	-X	250°(245°-255°)		-1.794”			
RC-7	068	TOP S.G. #2	+X	250°(245°-255°)		+1.794”			
RC-8	068	TOP S.G. #3	+X	250°(245°-255°)		+1.794”			
RC-9	068	TOP S.G. #4	-X	250°(245°-255°)		-1.794”			
RC-10	068	RCP #1	-X	250°(245°-255°)		-1.31”			
RC-11	068	RCP #2	+X	250°(245°-255°)		+1.31”			
RC-12	068	RCP #3	+X	250°(245°-255°)		+1.31”			
RC-13	068	RCP #4	-X	250°(245°-255°)		-1.31”			
RC-14	068	HOT LEG #1	+Z	250°(245°-255°)		+0.3”			
RC-15	068	HOT LEG #1	+Y	250°(245°-255°)		+0.034”			
RC-16	068	CROSS-OVER LEG #1	+Z	250°(245°-255°)		+0.873”			
RC-17	068	CROSS-OVER LEG #1	+Y	250°(245°-255°)		-0.677”			

Attachment 4
(Page 2 of 18)

INSTRUMENTED THERMAL MONITORING POINTS 250° (245°-255°) TEMPERATURE DATA READINGS

Date _____

NUCLEAR STEAM SUPPLY SYSTEM LOOP MONITORING POINTS									
MONITOR POINT ID	SYS	LOCATION	DIRECTION	PREDICTED TEMP °F AT PLATEAU	ACTUAL TEMP °F	MAXIMUM PREDICTED MOVEMENT AT 557°F	CALCULATED MOVEMENT AT ACTUAL READING	INITIAL/ DATE	COMMENTS
RC-18	068	COLD LEG #1	+Z	250°(245°-255°)		+0.866”			
RC-19	068	COLD LEG #1	-Y	250°(245°-255°)		-0.023”			
RC-20	068	HOT LEG #2	+Z	250°(245°-255°)		+0.3”			
RC-21	068	HOT LEG #2	+Y	250°(245°-255°)		+0.034”			
RC-22	068	CROSS-OVER LEG #2	+Z	250°(245°-255°)		+0.873”			
RC-23	068	CROSS-OVER LEG #2	+Y	250°(245°-255°)		-0.677”			
RC-24	068	COLD LEG #2	+Z	250°(245°-255°)		+0.866”			
RC-25	068	COLD LEG #2	-Y	250°(245°-255°)		-0.023”			
RC-26	068	HOT LEG #3	-Z	250°(245°-255°)		-0.3”			
RC-27	068	HOT LEG #3	+Y	250°(245°-255°)		+0.034”			
RC-28	068	CROSS-OVER LEG #3	-Z	250°(245°-255°)		-0.873"			
RC-29	068	CROSS-OVER LEG #3	+Y	250°(245°-255°)		-0.677”			
RC-30	068	COLD LEG #3	-Z	250°(245°-255°)		-0.866”			
RC-31	068	COLD LEG #3	-Y	250°(245°-255°)		-0.023”			
RC-32	068	HOT LEG #4	-Z	250°(245°-255°)		-0.3”			
RC-33	068	HOT LEG #4	+Y	250°(245°-255°)		+0.034”			

Attachment 4
(Page 3 of 18)

INSTRUMENTED THERMAL MONITORING POINTS 250° (245°-255°) TEMPERATURE DATA READINGS

Date _____

NUCLEAR STEAM SUPPLY SYSTEM LOOP MONITORING POINTS									
MONITOR POINT ID	SYS	LOCATION	DIRECTION	PREDICTED TEMP °F AT PLATEAU	ACTUAL TEMP °F	MAXIMUM PREDICTED MOVEMENT AT 557°F	CALCULATED MOVEMENT AT ACTUAL READING	INITIAL/ DATE	COMMENTS
RC-34	068	CROSS-OVER LEG #4	-Z	250°(245°-255°)		-0.873”			
RC-35	068	CROSS-OVER LEG #4	+Y	250°(245°-255°)		-0.667”			
RC-36	068	COLD LEG #4	-Z	250°(245°-255°)		-0.866”			
RC-37	068	COLD LEG #4	-Y	250°(245°-255°)		-0.023”			
RC-38	068	PZR TOP	+X	250°(245°-255°)		+0.18”			

Attachment 4
(Page 4 of 18)

INSTRUMENTED THERMAL MONITORING POINTS 250° (245°-255°) TEMPERATURE DATA READINGS

Date _____

ALL OTHER SYSTEM MONITORING POINTS										
MONITOR POINT ID	SYS	LOCATION	ELEV.	DIRECTION	PREDICTED TEMP °F AT PLATEAU	ACTUAL TEMP °F	MAXIMUM PREDICTED MOVEMENT AT 557°F	CALCULATED MOVEMENT AT ACTUAL READING	INITIAL /DATE	COMMENTS
MS-1	001	INSIDE CRANE WALL/AZ4	761’	Y (VERTICAL)	250°(245°-255°)		+1.3716”			
MS-2	001	INSIDE CRANE WALL/AZ4	737’	Z (AXIAL)	250°(245°-255°)		+1.8972”			
MS-3	001	INSIDE CRANE WALL/AZ5	733’	X (LATERAL)	250°(245°-255°)		+0.8548”			
MS-4	001	INSIDE CRANE WALL/AZ10	733’	Y (VERTICAL)	250°(245°-255°)		-0.7987”			
MS-5	001	INSIDE CRANE WALL/AZ175	761’	Y (VERTICAL)	250°(245°-255°)		+1.4567”			
MS-6	001	INSIDE CRANE WALL/AZ175	744’	Z (AXIAL)	250°(245°-255°)		-1.7413”			
MS-7	001	INSIDE CRANE WALL/AZ169	737’	X (LATERAL)	250°(245°-255°)		+0.9885”			
MS-8	001	INSIDE CRANE WALL/AZ169	737’	Y (VERTICAL)	250°(245°-255°)		-0.7272”			
MS-9	001	INSIDE CRANE WALL/AZ183	756’	Y (VERTICAL)	250°(245°-255°)		+1.5027”			
MS-10	001	INSIDE CRANE WALL/AZ184	738’	Z (AXIAL)	250°(245°-255°)		-2.1203”			

Attachment 4
(Page 5 of 18)

INSTRUMENTED THERMAL MONITORING POINTS 250° (245°-255°) TEMPERATURE DATA READINGS

Date _____

ALL OTHER SYSTEM MONITORING POINTS										
MONITOR POINT ID	SYS	LOCATION	ELEV.	DIRECTION	PREDICTED TEMP °F AT PLATEAU	ACTUAL TEMP °F	MAXIMUM PREDICTED MOVEMENT AT 557°F	CALCULATED MOVEMENT AT ACTUAL READING	INITIAL /DATE	COMMENTS
MS-11	001	INSIDE CRANE WALL/AZ169	737’	X (LATERAL)	250°(245°-255°)		+1.3459”			
MS-12	001	INSIDE CRANE WALL/AZ171	737’	Y (VERTICAL)	250°(245°-255°)		-0.5582”			
MS-13	001	INSIDE CRANE WALL/AZ171	760’	Y (VERTICAL)	250°(245°-255°)		+1.4411”			
MS-14	001	INSIDE CRANE WALL/AZ171	737’	Z (AXIAL)	250°(245°-255°)		+1.9760”			
MS-15	001	OUTSIDE CRANE WALL/AZ171	737’	X (LATERAL)	250°(245°-255°)		+12281”			
MS-16	001	OUTSIDE CRANE WALL/AZ171	737’	Y (VERTICAL)	250°(245°-255°)		-0.8978”			
MS-17	001	OUTSIDE CRANE WALL/AZ89	737’	X (LATERAL)	250°(245°-255°)		+12.0000”			
MS-18	001	OUTSIDE CRANE WALL/AZ89	737’	X (LATERAL)	250°(245°-255°)		+13.0000”			
MS-19	001	K-T15	723’	X (LATERAL)	250°(245°-255°)		+8.1300”			
MS-20	001	K-T15	723’	Z (LATERAL)	250°(245°-255°)		+7.6000”			
MS-21	001	K-T15	723’	X (LATERAL)	250°(245°-255°)		+7.8000”			
MS-22	001	K-T15	723’	Z (LATERAL)	250°(245°-255°)		-7.3000”			

Attachment 4
(Page 6 of 18)

INSTRUMENTED THERMAL MONITORING POINTS 250° (245°-255°) TEMPERATURE DATA READINGS

Date _____

ALL OTHER SYSTEM MONITORING POINTS										
MONITOR POINT ID	SYS	LOCATION	ELEV.	DIRECTION	PREDICTED TEMP °F AT PLATEAU	ACTUAL TEMP °F	MAXIMUM PREDICTED MOVEMENT AT 557°F	CALCULATED MOVEMENT AT ACTUAL READING	INITIAL /DATE	COMMENTS
MS-23	001	M-T15	722’	X (LATERAL)	250°(245°-255°)		+5.0000”			
MS-24	001	M-T15	722’	Z (AXIAL)	250°(245°-255°)		-5.6600”			
MS-25	001	M-T15	723’	X (LATERAL)	250°(245°-255°)		+5.0000			
MS-26	001	M-T15	723’	Z (AXIAL)	250°(245°-255°)		-5.9100”			
MS-27	001	J-T12	718’	Y (VERTICAL)	250°(245°-255°)		-1.5200”			
MS-28	001	J-T12	718’	Z (LATERAL)	250°(245°-255°)		+1.0300”			
MS-29	001	J-T10	727’	Z (LATERAL)	250°(245°-255°)		+2.0000”			
MS-30	001	J-T10	718’	X (LATERAL)	250°(245°-255°)		-2.2500”			
MS-31	001	G-T10	753’	Z-(AXIAL)	250°(245°-255°)		-1.3000”			
MS-32	001	G-T10	753’	X (LATERAL)	250°(245°-255°)		-1.9000”			

Attachment 4
(Page 7 of 18)

INSTRUMENTED THERMAL MONITORING POINTS 250° (245°-255°) TEMPERATURE DATA READINGS

Date _____

ALL OTHER SYSTEM MONITORING POINTS										
MONITOR POINT ID	SYS	LOCATION	ELEV.	DIRECTION	PREDICTED TEMP °F AT PLATEAU	ACTUAL TEMP °F	MAXIMUM PREDICTED MOVEMENT AT 557°F	CALCULATED MOVEMENT AT ACTUAL READING	INITIAL/ DATE	COMMENTS
FW-1	003	AZ21	759’	SX* (AXIAL)	250°(245°-255°)		+1.0198”			
FW-2	003	SOUTH VALVE ROOM/U-6	737’	Y (VERTICAL)	250°(245°-255°)		-0.4951”			
FW-3	003	SOUTH VALVE ROOM/U-6	737’	Z (LATERAL)	250°(245°-255°)		-0.9507”			
FW-4	003	INSIDE CRANE WALL/AZ280	759’	SX* (LATERAL)	250°(245°-255°)		+1.0930”			
FW-5	003	INSIDE CRANE WALL/AZ352	754’	Y (VERTICAL)	250°(245°-255°)		+0.6810”			
FW-6	003	INSIDE CRANE WALL/AZ352	733’	Z (AXIAL)	250°(245°-255°)		+0.8359”			
FW-7	003	INSIDE CRANE WALL/AZ199	759’	SX* (LATERAL)	250°(245°-255°)		-1.1612”			
FW-9	003	H-A15	734’	Z (LATERAL)	250°(245°-255°)		+0.9589”			
FW-10	003	H-A15	730’	X (LATERAL)	250°(245°-255°)		+0.6386”			
FW-11	003	AZ100	759’	SX* (LATERAL)	250°(245°-255°)		+0.8975”			
FW-12	003	AZ100	737’	Y (VERTICAL)	250°(245°-255°)		-0.6230”			

Attachment 4
(Page 8 of 18)

INSTRUMENTED THERMAL MONITORING POINTS 250° (245°-255°) TEMPERATURE DATA READINGS

Date _____

ALL OTHER SYSTEM MONITORING POINTS										
MONITOR POINT ID	SYS	LOCATION	ELEV.	DIRECTION	PREDICTED TEMP °F AT PLATEAU	ACTUAL TEMP °F	MAXIMUM PREDICTED MOVEMENT AT 557°F	CALCULATED MOVEMENT AT ACTUAL READING	INITIAL/ DATE	COMMENTS
FW-13	003	AZ170	737’	Z (LATERAL)	250°(245°-255°)		+0.8941”			
FW-14	003	U-A14	752’	X (LATERAL)	250°(245°-255°)		+1.3257”			
FW-15	003	U-A14	752’	Y (VERTICAL)	250°(245°-255°)		+0.8308”			
FW-17	003	U-A14	748’	Z (LATERAL)	250°(245°-255°)		-0.8581”			
FW-20 (LOOP3)	003	CRANE WALL/AZ188	726’	X (AXIAL)	250°(245°-255°)		+0.7584”			
FW-21 (LOOP3)	003	CRANE WALL/AZ188	726’	Z (LATERAL)	250°(245°-255°)		+1.4141”			
FW-22 (LOOP4)	003	CRANE WALL/AZ352	726’	X (AXIAL)	250°(245°-255°)		+0.7539”			
FW-23 (LOOP4)	003	CRANE WALL/AZ352	726’	Z (LATERAL)	250°(245°-255°)		-1.4160”			

Attachment 4
(Page 9 of 18)

INSTRUMENTED THERMAL MONITORING POINTS 250° (245°-255°) TEMPERATURE DATA READINGS

Date _____

ALL OTHER SYSTEM MONITORING POINTS										
MONITOR POINT ID	SYS	LOCATION	ELEV.	DIRECTION	PREDICTED TEMP °F AT PLATEAU	ACTUAL TEMP °F	MAXIMUM PREDICTED MOVEMENT AT 557°F	CALCULATED MOVEMENT AT ACTUAL READING	INITIAL/ DATE	COMMENTS
SGBD-4A	015	INSIDE CRANE WALL/AZ135	728’	SZ* (AXIAL)	250°(245°-255°)		+1.5868”			
SGBD-5	015	INSIDE CRANE WALL/AZ175	728’	X (LATERAL)	250°(245°-255°)		-0.6584”			
SGBD-6	015	INSIDE CRANE WALL/AZ162	730’	Z (LATERAL)	250°(245°-255°)		+1.5736”			
SGBD-9	015	INSIDE CRANE WALL/AZ59	709’	SZ* (AXIAL)	250°(245°-255°)		+1.6644”			
SGBD-10	015	INSIDE CRANE WALL/AZ14	709’	SY* (VERTICAL)	250°(245°-255°)		-0.8433			
SGBD-11	015	INSIDE CRANE WALL/AZ137	733’	Y (VERTICAL)	250°(245°-255°)		+0.3236”			
SGBD-13	015	INSIDE CRANE WALL/AZ185	733’	SY* (VERTICAL)	250°(245°-255°)		+0.6081”			
SGBD-14	015	INSIDE CRANE WALL/AZ200	708’	Y (VERTICAL)	250°(245°-255°)		-0.6283”			
SGBD-15	015	INSIDE CRANE WALL/AZ126	708’	SX* (LATERAL)	250°(245°-255°)		+4.2207”			
SGBD-16	015	INSIDE CRANE WALL/AZ10	708’	Y (VERTICAL)	250°(245°-255°)		-1.2471”			

Attachment 4
(Page 10 of 18)

INSTRUMENTED THERMAL MONITORING POINTS 250° (245°-255°) TEMPERATURE DATA READINGS

Date _____

ALL OTHER SYSTEM MONITORING POINTS										
MONITOR POINT ID	SYS	LOCATION	ELEV.	DIRECTION	PREDICTED TEMP °F AT PLATEAU	ACTUAL TEMP °F	MAXIMUM PREDICTED MOVEMENT AT 557°F	CALCULATED MOVEMENT AT ACTUAL READING	INITIAL/ DATE	COMMENTS
SGBD-17	015	INSIDE CRANE WALL/AZ60	708’	SX* (LATERAL)	250°(245°-255°)		+4.0890”			
SGBD-22	015	OUTSIDE CRANE WALL/U-A15	745’	X (LATERAL)	250°(245°-255°)		-1.1356”			

Attachment 4
(Page 11 of 18)

INSTRUMENTED THERMAL MONITORING POINTS 250° (245°-255°) TEMPERATURE DATA READINGS

Date _____

ALL OTHER SYSTEM MONITORING POINTS										
MONITOR POINT ID	SYS	LOCATION	ELEV.	DIRECTION	PREDICTED TEMP °F AT PLATEAU	ACTUAL TEMP °F	MAXIMUM PREDICTED MOVEMENT AT 557°F	CALCULATED MOVEMENT AT ACTUAL READING	INITIAL/ DATE	COMMENTS
CVCS-2	062	INSIDE CRANE WALL/AZ81	703’	SZ* (LATERAL)	250°(245°-255°)		+0.7296”			
CVCS-4	062	INSIDE CRANE WALL/AZ329	712’	SZ* (AXIAL)	250°(245°-255°)		+1.3237”			
CVCS-5	062	INSIDE CRANE WALL/AZ125	711’	SZ* (LATERAL)	250°(245°-255°)		+2.1542”			
CVCS-6	062	INSIDE CRANE WALL/AZ152	727’	SZ* (AXIAL)	250°(245°-255°)		-0.9446”			
CVCS-7	062	INSIDE CRANE WALL/AZ123	718’	SX* (LATERAL)	250°(245°-255°)		+0.8210”			
CVCS-8	062	INSIDE CRANE WALL/AZ43	727’	SX* (LATERAL)	250°(245°-255°)		+2.6284”			
CVCS-9	062	INSIDE CRANE WALL/AZ43	727’	SZ* (AXIAL)	250°(245°-255°)		-1.1833”			
CVCS-10	062	INSIDE CRANE WALL/AZ95	729’	SX* (LATERAL)	250°(245°-255°)		+1.4122”			
CVCS-11	062	INSIDE CRANE WALL/AZ128	728’	SX* (LATERAL)	250°(245°-255°)		-0.2603”			

Attachment 4
(Page 12 of 18)

INSTRUMENTED THERMAL MONITORING POINTS 250° (245°-255°) TEMPERATURE DATA READINGS

Date _____

ALL OTHER SYSTEM MONITORING POINTS										
MONITOR POINT ID	SYS	LOCATION	ELEV.	DIRECTION	PREDICTED TEMP °F AT PLATEAU	ACTUAL TEMP °F	MAXIMUM PREDICTED MOVEMENT AT 557°F	CALCULATED MOVEMENT AT ACTUAL READING	INITIAL/ DATE	COMMENTS
CVCS-12	062	INSIDE CRANE WALL/AZ328	727’	SX* (LATERAL)	250°(245°-255°)		+3.592”			
CVCS-13	062	INSIDE CRANE WALL/AZ328	727’	SZ* (AXIAL)	250°(245°-255°)		+2.6064”			
CVCS-14	062	INSIDE CRANE WALL/AZ343	727’	SX* (LATERAL)	250°(245°-255°)		+2.8029”			
CVCS-15	062	INSIDE CRANE WALL/AZ343	727’	SZ* (AXIAL)	250°(245°-255°)		+2.6743”			
CVCS-16	062	INSIDE CRANE WALL/AZ107	730’	Y (VERTICAL)	250°(245°-255°)		+1.7592”			
CVCS-17	062	INSIDE CRANE WALL/AZ210	726’	X (LATERAL)	250°(245°-255°)		+0.7413”			
CVCS-18	062	INSIDE CRANE WALL/AZ210	727’	SX* (LATERAL)	250°(245°-255°)		+2.0678”			
CVCS-20	062	INSIDE CRANE WALL/AZ150	728’	X (LATERAL)	250°(245°-255°)		-0.8519”			
CVCS-21	062	INSIDE CRANE WALL/AZ178	728’	Y (VERTICAL)	250°(245°-255°)		+0.3711”			

Attachment 4
(Page 13 of 18)

INSTRUMENTED THERMAL MONITORING POINTS 250° (245°-255°) TEMPERATURE DATA READINGS

Date _____

ALL OTHER SYSTEM MONITORING POINTS										
MONITOR POINT ID	SYS	LOCATION	ELEV.	DIRECTION	PREDICTED TEMP °F AT PLATEAU	ACTUAL TEMP °F	MAXIMUM PREDICTED MOVEMENT AT 557°F	CALCULATED MOVEMENT AT ACTUAL READING	INITIAL/ DATE	COMMENTS
SIS-1	063	INSIDE CRANE WALL/AZ321	725’	X (AXIAL)	250°(245°-255°)		+0.9079”			
SIS-3	063	INSIDE CRANE WALL/AZ40	726’	SX* (LATERAL)	250°(245°-255°)		-0.9959”			
SIS-4	063	INSIDE CRANE WALL/AZ42	725’	SX* (LATERAL)	250°(245°-255°)		-0.7704”			
SIS-5	063	INSIDE CRANE WALL/AZ32	723’	SZ* (LATERAL)	250°(245°-255°)		-0.8162”			
SIS-9	063	INSIDE CRANE WALL/AZ221	728’	Y (VERTICAL)	250°(245°-255°)		+0.3523”			
SIS-10	063	INSIDE CRANE WALL/AZ218	723’	SX* (LATERAL)	250°(245°-255°)		+0.4912”			
SIS-11	063	INSIDE CRANE WALL/AZ302	722’	SX* (AXIAL)	250°(245°-255°)		-1.1416”			
SIS-11A	063	INSIDE CRANE WALL/AZ302	722’	SZ* (LATERAL)	250°(245°-255°)		+0.4564”			
SIS-12	063	INSIDE CRANE WALL/AZ300	725’	SZ* (LATERAL)	250°(245°-255°)		-0.6812”			
SIS-14	063	INSIDE CRANE WALL/AZ42	729’	SZ* (LATERAL)	250°(245°-255°)		+0.9033”			

Attachment 4
(Page 14 of 18)

INSTRUMENTED THERMAL MONITORING POINTS 250° (245°-255°) TEMPERATURE DATA READINGS

Date _____

ALL OTHER SYSTEM MONITORING POINTS										
MONITOR POINT ID	SYS	LOCATION	ELEV.	DIRECTION	PREDICTED TEMP °F AT PLATEAU	ACTUAL TEMP °F	MAXIMUM PREDICTED MOVEMENT AT 557°F	CALCULATED MOVEMENT AT ACTUAL READING	INITIAL/ DATE	COMMENTS
SIS-15	063	INSIDE CRANE WALL/AZ225	720’	Z (LATERAL)	250°(245°-255°)		+1.2699”			
SIS-16	063	INSIDE CRANE WALL/AZ135	722’	SX* (LATERAL)	250°(245°-255°)		+0.6019”			
SIS-17	063	INSIDE CRANE WALL/AZ197	721’	SZ* (AXIAL)	250°(245°-255°)		+0.9169”			
SIS-19	063	INSIDE CRANE WALL/AZ188	725’	Y (VERTICAL)	250°(245°-255°)		+0.4105”			
SIS-20	063	INSIDE CRANE WALL/AZ37	725’	Z (LATERAL)	250°(245°-255°)		-0.7609”			
SIS-21	063	INSIDE CRANE WALL/AZ35	731’	SX* (LATERAL)	250°(245°-255°)		+0.4311”			

Attachment 4
(Page 15 of 18)

INSTRUMENTED THERMAL MONITORING POINTS 250° (245°-255°) TEMPERATURE DATA READINGS

Date _____

ALL OTHER SYSTEM MONITORING POINTS										
MONITOR POINT ID	SYS	LOCATION	ELEV.	DIRECTION	PREDICTED TEMP °F AT PLATEAU	ACTUAL TEMP °F	MAXIMUM PREDICTED MOVEMENT AT 557°F	CALCULATED MOVEMENT AT ACTUAL READING	INITIAL/ DATE	COMMENTS
RCS-1	068	INSIDE CRANE WALL/AZ109	722’	X (LATERAL)	250°(245°-255°)		SURGE LINE			
RCS-2	068	INSIDE CRANE WALL/AZ92	723’	Z (LATERAL)	250°(245°-255°)		-2.212”			
RCS-3	068	INSIDE CRANE WALL/AZ104	783’	Y (VERTICAL)	250°(245°-255°)		+2.6907”			
RCS-4	068	INSIDE CRANE WALL/AZ34	720’	X (LATERAL)	250°(245°-255°)		-1.8008”			
RCS-5	068	INSIDE CRANE WALL/AZ98	733’	SX* (LATERAL)	250°(245°-255°)		-0.7884”			
RCS-6	068	INSIDE CRANE WALL/AZ95	720’	Z (AXIAL)	250°(245°-255°)		+1.1741”			
RCS-7	068	INSIDE CRANE WALL/AZ104	733’	Y (VERTICAL)	250°(245°-255°)		+0.7693”			
RCS-8	068	INSIDE CRANE WALL/AZ92	777’	Y (VERTICAL)	250°(245°-255°)		+2.8193”			
RCS-9	068	INSIDE CRANE WALL/AZ90	778’	Y (VERTICAL)	250°(245°-255°)		+2.7680”			
RCS-10	068	INSIDE CRANE WALL/AZ135	776’	Y (VERTICAL)	250°(245°-255°)		+2.7166”			

Attachment 4
(Page 16 of 18)

INSTRUMENTED THERMAL MONITORING POINTS 250° (245°-255°) TEMPERATURE DATA READINGS

Date _____

ALL OTHER SYSTEM MONITORING POINTS										
MONITOR POINT ID	SYS	LOCATION	ELEV.	DIRECTION	PREDICTED TEMP °F AT PLATEAU	ACTUAL TEMP °F	MAXIMUM PREDICTED MOVEMENT AT 557°F	CALCULATED MOVEMENT AT ACTUAL READING	INITIAL/ DATE	COMMENTS
RCS-11	068	INSIDE CRANE WALL/AZ104	761’	Z (AXIAL)	250°(245°-255°)		-0.2539”			
RCS-12	068	INSIDE CRANE WALL/AZ87	747’	Y (VERTICAL)	250°(245°-255°)		+2.5554”			
RCS-12A	068	INSIDE CRANE WALL/AZ87	747’	SZ* (LATERAL)	250°(245°-255°)		+0.3065”			
RCS-13	068	INSIDE CRANE WALL/AZ99	781’	Y (VERTICAL)	250°(245°-255°)		+4.6356”			
RCS-14	068	INSIDE CRANE WALL/AZ41	704’	SZ* (LATERAL)	250°(245°-255°)		+1.4031”			
RCS-15	068	INSIDE CRANE WALL/AZ141	704’	SZ* (LATERAL)	250°(245°-255°)		+1.0580”			
RCS-16	068	INSIDE CRANE WALL/AZ322	704’	SZ* (LATERAL)	250°(245°-255°)		-0.7987”			
RCS-17	068	INSIDE CRANE WALL/AZ200	723’	X (LATERAL)	250°(245°-255°)		-0.3299”			
RCS-18	068	INSIDE CRANE WALL/AZ300	722’	X (LATERAL)	250°(245°-255°)		-0.8566”			
RCS-19	068	INSIDE CRANE WALL/AZ200	723’	Z (AXIAL)	250°(245°-255°)		-0.7212”			

Attachment 4
(Page 17 of 18)

INSTRUMENTED THERMAL MONITORING POINTS 250° (245°-255°) TEMPERATURE DATA READINGS

Date _____

ALL OTHER SYSTEM MONITORING POINTS										
MONITOR POINT ID	SYS	LOCATION	ELEV.	DIRECTION	PREDICTED TEMP °F AT PLATEAU	ACTUAL TEMP °F	MAXIMUM PREDICTED MOVEMENT AT 557°F	CALCULATED MOVEMENT AT ACTUAL READING	INITIAL/ DATE	COMMENTS
RCS-20	068	INSIDE CRANE WALL/AZ308	722’	X (LATERAL)*	250°(245°-255°)		-0.9321”			
RCS-21	068	INSIDE CRANE WALL/AZ151	755’	Y (VERTICAL)	250°(245°-255°)		+1.8255”			
RCS-23	068	INSIDE CRANE WALL/AZ151	752'	SZ* (LATERAL)	250°(245°-255°)		+0.2618”			
RCS-24	068	INSIDE CRANE WALL/AZ104	775’	Y (VERTICAL)	250°(245°-255°)		+2.6702			

Attachment 4
(Page 18 of 18)

INSTRUMENTED THERMAL MONITORING POINTS 250° (245°-255°) TEMPERATURE DATA READINGS

Date _____

ALL OTHER SYSTEM MONITORING POINTS										
MONITOR POINT ID	SYS	LOCATION	ELEV.	DIRECTION	PREDICTED TEMP °F AT PLATEAU	ACTUAL TEMP °F	MAXIMUM PREDICTED MOVEMENT AT 557°F	CALCULATED MOVEMENT AT ACTUAL READING	INITIAL/ DATE	COMMENTS
RHR-1	074	INSIDE CRANE WALL/AZ351	707’	SX* (LATERAL)	250°(245°-255°)		+1.4846”			
RHR-2	074	INSIDE CRANE WALL/AZ322	707’	SZ* (AXIAL)	250°(245°-255°)		-0.7466”			
RHR-4	074	INSIDE CRANE WALL/AZ349	719’	Z (LATERAL)	250°(245°-255°)		-1.1988”			
RHR-5	074	V-A11	718	Z (LATERAL)	250°(245°-255°)		-0.7721”			

Attachment 5
(Page 1 of 18)

INSTRUMENTED THERMAL MONITORING POINTS 350° (345°-355°) TEMPERATURE DATA READINGS

Date _____

NUCLEAR STEAM SUPPLY SYSTEM LOOP MONITORING POINTS									
MONITOR POINT ID	SYS	LOCATION	DIRECTION	PREDICTED TEMP °F AT PLATEAU	ACTUAL TEMP °F	MAXIMUM PREDICTED MOVEMENT AT 557°F	CALCULATED MOVEMENT AT ACTUAL READING	INITIAL/ DATE	COMMENTS
RC-1	068	TOP S.G. #1	+Y	350°(345°-355°)		+2.739”			
RC-2	068	TOP S.G. #2	+Y	350°(345°-355°)		+2.739”			
RC-3	068	TOP S.G. #3	+Y	350°(345°-355°)		+2.739”			
RC-4	068	TOP S.G. #4	+Y	350°(345°-355°)		+2.739”			
RC-5	068	PZR TOP	+Y	350°(345°-355°)		+2.68”			
RC-6	068	TOP S.G. #1	-X	350°(345°-355°)		-1.794”			
RC-7	068	TOP S.G. #2	+X	350°(345°-355°)		+1.794”			
RC-8	068	TOP S.G. #3	+X	350°(345°-355°)		+1.794”			
RC-9	068	TOP S.G. #4	-X	350°(345°-355°)		-1.794”			
RC-10	068	RCP #1	-X	350°(345°-355°)		-1.31”			
RC-11	068	RCP #2	+X	350°(345°-355°)		+1.31”			
RC-12	068	RCP #3	+X	350°(345°-355°)		+1.31”			
RC-13	068	RCP #4	-X	350°(345°-355°)		-1.31”			
RC-14	068	HOT LEG #1	+Z	350°(345°-355°)		+0.3”			
RC-15	068	HOT LEG #1	+Y	350°(345°-355°)		+0.034”			
RC-16	068	CROSS-OVER LEG #1	+Z	350°(345°-355°)		+0.873”			
RC-17	068	CROSS-OVER LEG #1	+Y	350°(345°-355°)		-0.677”			

Attachment 5
(Page 2 of 18)

INSTRUMENTED THERMAL MONITORING POINTS 350° (345°-355°) TEMPERATURE DATA READINGS

Date _____

NUCLEAR STEAM SUPPLY SYSTEM LOOP MONITORING POINTS									
MONITOR POINT ID	SYS	LOCATION	DIRECTION	PREDICTED TEMP °F AT PLATEAU	ACTUAL TEMP °F	MAXIMUM PREDICTED MOVEMENT AT 557°F	CALCULATED MOVEMENT AT ACTUAL READING	INITIAL/ DATE	COMMENTS
RC-18	068	COLD LEG #1	+Z	350°(345°-355°)		+0.866”			
RC-19	068	COLD LEG #1	-Y	350°(345°-355°)		-0.023”			
RC-20	068	HOT LEG #2	+Z	350°(345°-355°)		+0.3”			
RC-21	068	HOT LEG #2	+Y	350°(345°-355°)		+0.034”			
RC-22	068	CROSS-OVER LEG #2	+Z	350°(345°-355°)		+0.873”			
RC-23	068	CROSS-OVER LEG #2	+Y	350°(345°-355°)		-0.677”			
RC-24	068	COLD LEG #2	+Z	350°(345°-355°)		+0.866”			
RC-25	068	COLD LEG #2	-Y	350°(345°-355°)		-0.023”			
RC-26	068	HOT LEG #3	-Z	350°(345°-355°)		-0.3”			
RC-27	068	HOT LEG #3	+Y	350°(345°-355°)		+0.034”			
RC-28	068	CROSS-OVER LEG #3	-Z	350°(345°-355°)		-0.873"			
RC-29	068	CROSS-OVER LEG #3	+Y	350°(345°-355°)		-0.677”			
RC-30	068	COLD LEG #3	-Z	350°(345°-355°)		-0.866”			
RC-31	068	COLD LEG #3	-Y	350°(345°-355°)		-0.023”			
RC-32	068	HOT LEG #4	-Z	350°(345°-355°)		-0.3”			
RC-33	068	HOT LEG #4	+Y	350°(345°-355°)		+0.034”			

Attachment 5
(Page 3 of 18)

INSTRUMENTED THERMAL MONITORING POINTS 350° (345°-355°) TEMPERATURE DATA READINGS

Date _____

NUCLEAR STEAM SUPPLY SYSTEM LOOP MONITORING POINTS									
MONITOR POINT ID	SYS	LOCATION	DIRECTION	PREDICTED TEMP °F AT PLATEAU	ACTUAL TEMP °F	MAXIMUM PREDICTED MOVEMENT AT 557°F	CALCULATED MOVEMENT AT ACTUAL READING	INITIAL/ DATE	COMMENTS
RC-34	068	CROSS-OVER LEG #4	-Z	350°(345°-355°)		-0.873”			
RC-35	068	CROSS-OVER LEG #4	+Y	350°(345°-355°)		-0.667”			
RC-36	068	COLD LEG #4	-Z	350°(345°-355°)		-0.866”			
RC-37	068	COLD LEG #4	-Y	350°(345°-355°)		-0.023”			
RC-38	068	PZR TOP	+X	350°(345°-355°)		+0.18”			

Attachment 5
(Page 4 of 18)

INSTRUMENTED THERMAL MONITORING POINTS 350° (345°-355°) TEMPERATURE DATA READINGS

Date _____

ALL OTHER SYSTEM MONITORING POINTS										
MONITOR POINT ID	SYS	LOCATION	ELEV.	DIRECTION	PREDICTED TEMP °F AT PLATEAU	ACTUAL TEMP °F	MAXIMUM PREDICTED MOVEMENT AT 557°F	CALCULATED MOVEMENT AT ACTUAL READING	INITIAL /DATE	COMMENTS
MS-1	001	INSIDE CRANE WALL/AZ4	761’	Y (VERTICAL)	350°(345°-355°)		+1.3716”			
MS-2	001	INSIDE CRANE WALL/AZ4	737’	Z (AXIAL)	350°(345°-355°)		+1.8972”			
MS-3	001	INSIDE CRANE WALL/AZ5	733’	X (LATERAL)	350°(345°-355°)		+0.8548”			
MS-4	001	INSIDE CRANE WALL/AZ10	733’	Y (VERTICAL)	350°(345°-355°)		-0.7987”			
MS-5	001	INSIDE CRANE WALL/AZ175	761’	Y (VERTICAL)	350°(345°-355°)		+1.4567”			
MS-6	001	INSIDE CRANE WALL/AZ175	744’	Z (AXIAL)	350°(345°-355°)		-1.7413”			
MS-7	001	INSIDE CRANE WALL/AZ169	737’	X (LATERAL)	350°(345°-355°)		+0.9885”			
MS-8	001	INSIDE CRANE WALL/AZ169	737’	Y (VERTICAL)	350°(345°-355°)		-0.7272”			
MS-9	001	INSIDE CRANE WALL/AZ183	756’	Y (VERTICAL)	350°(345°-355°)		+1.5027”			
MS-10	001	INSIDE CRANE WALL/AZ184	738’	Z (AXIAL)	350°(345°-355°)		-2.1203”			

Attachment 5
(Page 5 of 18)

INSTRUMENTED THERMAL MONITORING POINTS 350° (345°-355°) TEMPERATURE DATA READINGS

Date _____

ALL OTHER SYSTEM MONITORING POINTS										
MONITOR POINT ID	SYS	LOCATION	ELEV.	DIRECTION	PREDICTED TEMP °F AT PLATEAU	ACTUAL TEMP °F	MAXIMUM PREDICTED MOVEMENT AT 557°F	CALCULATED MOVEMENT AT ACTUAL READING	INITIAL /DATE	COMMENTS
MS-11	001	INSIDE CRANE WALL/AZ169	737’	X (LATERAL)	350°(345°-355°)		+1.3459”			
MS-12	001	INSIDE CRANE WALL/AZ171	737’	Y (VERTICAL)	350°(345°-355°)		-0.5582”			
MS-13	001	INSIDE CRANE WALL/AZ171	760’	Y (VERTICAL)	350°(345°-355°)		+1.4411”			
MS-14	001	INSIDE CRANE WALL/AZ171	737’	Z (AXIAL)	350°(345°-355°)		+1.9760”			
MS-15	001	OUTSIDE CRANE WALL/AZ171	737’	X (LATERAL)	350°(345°-355°)		+12281”			
MS-16	001	OUTSIDE CRANE WALL/AZ171	737’	Y (VERTICAL)	350°(345°-355°)		-0.8978”			
MS-17	001	OUTSIDE CRANE WALL/AZ89	737’	X (LATERAL)	350°(345°-355°)		+12.0000”			
MS-18	001	OUTSIDE CRANE WALL/AZ89	737’	X (LATERAL)	350°(345°-355°)		+13.0000”			
MS-19	001	K-T15	723’	X (LATERAL)	350°(345°-355°)		+8.1300”			
MS-20	001	K-T15	723’	Z (LATERAL)	350°(345°-355°)		+7.6000”			
MS-21	001	K-T15	723’	X (LATERAL)	350°(345°-355°)		+7.8000”			
MS-22	001	K-T15	723’	Z (LATERAL)	350°(345°-355°)		-7.3000”			

Attachment 5
(Page 6 of 18)

INSTRUMENTED THERMAL MONITORING POINTS 350° (345°-355°) TEMPERATURE DATA READINGS

Date _____

ALL OTHER SYSTEM MONITORING POINTS										
MONITOR POINT ID	SYS	LOCATION	ELEV.	DIRECTION	PREDICTED TEMP °F AT PLATEAU	ACTUAL TEMP °F	MAXIMUM PREDICTED MOVEMENT AT 557°F	CALCULATED MOVEMENT AT ACTUAL READING	INITIAL /DATE	COMMENTS
MS-23	001	M-T15	722’	X (LATERAL)	350°(345°-355°)		+5.0000”			
MS-24	001	M-T15	722’	Z (AXIAL)	350°(345°-355°)		-5.6600”			
MS-25	001	M-T15	723’	X (LATERAL)	350°(345°-355°)		+5.0000			
MS-26	001	M-T15	723’	Z (AXIAL)	350°(345°-355°)		-5.9100”			
MS-27	001	J-T12	718’	Y (VERTICAL)	350°(345°-355°)		-1.5200”			
MS-28	001	J-T12	718’	Z (LATERAL)	350°(345°-355°)		+1.0300”			
MS-29	001	J-T10	727’	Z (LATERAL)	350°(345°-355°)		+2.0000”			
MS-30	001	J-T10	718’	X (LATERAL)	350°(345°-355°)		-2.2500”			
MS-31	001	G-T10	753’	Z-(AXIAL)	350°(345°-355°)		-1.3000”			
MS-32	001	G-T10	753’	X (LATERAL)	350°(345°-355°)		-1.9000”			

Attachment 5
(Page 7 of 18)

INSTRUMENTED THERMAL MONITORING POINTS 350° (345°-355°) TEMPERATURE DATA READINGS

Date _____

ALL OTHER SYSTEM MONITORING POINTS										
MONITOR POINT ID	SYS	LOCATION	ELEV.	DIRECTION	PREDICTED TEMP °F AT PLATEAU	ACTUAL TEMP °F	MAXIMUM PREDICTED MOVEMENT AT 557°F	CALCULATED MOVEMENT AT ACTUAL READING	INITIAL/ DATE	COMMENTS
FW-1	003	AZ21	759’	SX* (AXIAL)	350°(345°-355°)		+1.0198”			
FW-2	003	SOUTH VALVE ROOM/U-6	737’	Y (VERTICAL)	350°(345°-355°)		-0.4951”			
FW-3	003	SOUTH VALVE ROOM/U-6	737’	Z (LATERAL)	350°(345°-355°)		-0.9507”			
FW-4	003	INSIDE CRANE WALL/AZ280	759’	SX* (LATERAL)	350°(345°-355°)		+1.0930”			
FW-5	003	INSIDE CRANE WALL/AZ352	754’	Y (VERTICAL)	350°(345°-355°)		+0.6810”			
FW-6	003	INSIDE CRANE WALL/AZ352	733’	Z (AXIAL)	350°(345°-355°)		+0.8359”			
FW-7	003	INSIDE CRANE WALL/AZ199	759’	SX* (LATERAL)	350°(345°-355°)		-1.1612”			
FW-9	003	H-A15	734’	Z (LATERAL)	350°(345°-355°)		+0.9589”			
FW-10	003	H-A15	730’	X (LATERAL)	350°(345°-355°)		+0.6386”			
FW-11	003	AZ100	759’	SX* (LATERAL)	350°(345°-355°)		+0.8975”			
FW-12	003	AZ100	737’	Y (VERTICAL)	350°(345°-355°)		-0.6230”			

Attachment 5
(Page 8 of 18)

INSTRUMENTED THERMAL MONITORING POINTS 350° (345°-355°) TEMPERATURE DATA READINGS

Date _____

ALL OTHER SYSTEM MONITORING POINTS										
MONITOR POINT ID	SYS	LOCATION	ELEV.	DIRECTION	PREDICTED TEMP °F AT PLATEAU	ACTUAL TEMP °F	MAXIMUM PREDICTED MOVEMENT AT 557°F	CALCULATED MOVEMENT AT ACTUAL READING	INITIAL/ DATE	COMMENTS
FW-13	003	AZ170	737’	Z (LATERAL)	350°(345°-355°)		+0.8941”			
FW-14	003	U-A14	752’	X (LATERAL)	350°(345°-355°)		+1.3257”			
FW-15	003	U-A14	752’	Y (VERTICAL)	350°(345°-355°)		+0.8308”			
FW-17	003	U-A14	748’	Z (LATERAL)	350°(345°-355°)		-0.8581”			
FW-20 (LOOP3)	003	CRANE WALL/AZ188	726’	X (AXIAL)	350°(345°-355°)		+0.7584”			
FW-21 (LOOP3)	003	CRANE WALL/AZ188	726’	Z (LATERAL)	350°(345°-355°)		+1.4141”			
FW-22 (LOOP4)	003	CRANE WALL/AZ352	726’	X (AXIAL)	350°(345°-355°)		+0.7539”			
FW-23 (LOOP4)	003	CRANE WALL/AZ352	726’	Z (LATERAL)	350°(345°-355°)		-1.4160”			

Attachment 5
(Page 9 of 18)

INSTRUMENTED THERMAL MONITORING POINTS 350° (345°-355°) TEMPERATURE DATA READINGS

Date _____

ALL OTHER SYSTEM MONITORING POINTS										
MONITOR POINT ID	SYS	LOCATION	ELEV.	DIRECTION	PREDICTED TEMP °F AT PLATEAU	ACTUAL TEMP °F	MAXIMUM PREDICTED MOVEMENT AT 557°F	CALCULATED MOVEMENT AT ACTUAL READING	INITIAL/ DATE	COMMENTS
SGBD-4A	015	INSIDE CRANE WALL/AZ135	728’	SZ* (AXIAL)	350°(345°-355°)		+1.5868”			
SGBD-5	015	INSIDE CRANE WALL/AZ175	728’	X (LATERAL)	350°(345°-355°)		-0.6584”			
SGBD-6	015	INSIDE CRANE WALL/AZ162	730’	Z (LATERAL)	350°(345°-355°)		+1.5736”			
SGBD-9	015	INSIDE CRANE WALL/AZ59	709’	SZ* (AXIAL)	350°(345°-355°)		+1.6644”			
SGBD-10	015	INSIDE CRANE WALL/AZ14	709’	SY* (VERTICAL)	350°(345°-355°)		-0.8433			
SGBD-11	015	INSIDE CRANE WALL/AZ137	733’	Y (VERTICAL)	350°(345°-355°)		+0.3236”			
SGBD-13	015	INSIDE CRANE WALL/AZ185	733’	SY* (VERTICAL)	350°(345°-355°)		+0.6081”			
SGBD-14	015	INSIDE CRANE WALL/AZ200	708’	Y (VERTICAL)	350°(345°-355°)		-0.6283”			
SGBD-15	015	INSIDE CRANE WALL/AZ126	708’	SX* (LATERAL)	350°(345°-355°)		+4.2207”			
SGBD-16	015	INSIDE CRANE WALL/AZ10	708’	Y (VERTICAL)	350°(345°-355°)		-1.2471”			

Attachment 5
(Page 10 of 18)

INSTRUMENTED THERMAL MONITORING POINTS 350° (345°-355°) TEMPERATURE DATA READINGS

Date _____

ALL OTHER SYSTEM MONITORING POINTS										
MONITOR POINT ID	SYS	LOCATION	ELEV.	DIRECTION	PREDICTED TEMP °F AT PLATEAU	ACTUAL TEMP °F	MAXIMUM PREDICTED MOVEMENT AT 557°F	CALCULATED MOVEMENT AT ACTUAL READING	INITIAL/ DATE	COMMENTS
SGBD-17	015	INSIDE CRANE WALL/AZ60	708’	SX* (LATERAL)	350°(345°-355°)		+4.0890”			
SGBD-22	015	OUTSIDE CRANE WALL/U-A15	745’	X (LATERAL)	350°(345°-355°)		-1.1356”			

Attachment 5
(Page 11 of 18)

INSTRUMENTED THERMAL MONITORING POINTS 350° (345°-355°) TEMPERATURE DATA READINGS

Date _____

ALL OTHER SYSTEM MONITORING POINTS										
MONITOR POINT ID	SYS	LOCATION	ELEV.	DIRECTION	PREDICTED TEMP °F AT PLATEAU	ACTUAL TEMP °F	MAXIMUM PREDICTED MOVEMENT AT 557°F	CALCULATED MOVEMENT AT ACTUAL READING	INITIAL/ DATE	COMMENTS
CVCS-2	062	INSIDE CRANE WALL/AZ81	703’	SZ* (LATERAL)	350°(345°-355°)		+0.7296”			
CVCS-4	062	INSIDE CRANE WALL/AZ329	712’	SZ* (AXIAL)	350°(345°-355°)		+1.3237”			
CVCS-5	062	INSIDE CRANE WALL/AZ125	711’	SZ* (LATERAL)	350°(345°-355°)		+2.1542”			
CVCS-6	062	INSIDE CRANE WALL/AZ152	727’	SZ* (AXIAL)	350°(345°-355°)		-0.9446”			
CVCS-7	062	INSIDE CRANE WALL/AZ123	718’	SX* (LATERAL)	350°(345°-355°)		+0.8210”			
CVCS-8	062	INSIDE CRANE WALL/AZ43	727’	SX* (LATERAL)	350°(345°-355°)		+2.6284”			
CVCS-9	062	INSIDE CRANE WALL/AZ43	727’	SZ* (AXIAL)	350°(345°-355°)		-1.1833”			
CVCS-10	062	INSIDE CRANE WALL/AZ95	729’	SX* (LATERAL)	350°(345°-355°)		+1.4122”			
CVCS-11	062	INSIDE CRANE WALL/AZ128	728’	SX* (LATERAL)	350°(345°-355°)		-0.2603”			

Attachment 5
(Page 12 of 18)

INSTRUMENTED THERMAL MONITORING POINTS 350° (345°-355°) TEMPERATURE DATA READINGS

Date _____

ALL OTHER SYSTEM MONITORING POINTS										
MONITOR POINT ID	SYS	LOCATION	ELEV.	DIRECTION	PREDICTED TEMP °F AT PLATEAU	ACTUAL TEMP °F	MAXIMUM PREDICTED MOVEMENT AT 557°F	CALCULATED MOVEMENT AT ACTUAL READING	INITIAL/ DATE	COMMENTS
CVCS-12	062	INSIDE CRANE WALL/AZ328	727’	SX* (LATERAL)	350°(345°-355°)		+3.592”			
CVCS-13	062	INSIDE CRANE WALL/AZ328	727’	SZ* (AXIAL)	350°(345°-355°)		+2.6064”			
CVCS-14	062	INSIDE CRANE WALL/AZ343	727’	SX* (LATERAL)	350°(345°-355°)		+2.8029”			
CVCS-15	062	INSIDE CRANE WALL/AZ343	727’	SZ* (AXIAL)	350°(345°-355°)		+2.6743”			
CVCS-16	062	INSIDE CRANE WALL/AZ107	730’	Y (VERTICAL)	350°(345°-355°)		+1.7592”			
CVCS-17	062	INSIDE CRANE WALL/AZ210	726’	X (LATERAL)	350°(345°-355°)		+0.7413”			
CVCS-18	062	INSIDE CRANE WALL/AZ210	727’	SX* (LATERAL)	350°(345°-355°)		+2.0678”			
CVCS-20	062	INSIDE CRANE WALL/AZ150	728’	X (LATERAL)	350°(345°-355°)		-0.8519”			
CVCS-21	062	INSIDE CRANE WALL/AZ178	728’	Y (VERTICAL)	350°(345°-355°)		+0.3711”			

Attachment 5
(Page 13 of 18)

INSTRUMENTED THERMAL MONITORING POINTS 350° (345°-355°) TEMPERATURE DATA READINGS

Date _____

ALL OTHER SYSTEM MONITORING POINTS										
MONITOR POINT ID	SYS	LOCATION	ELEV.	DIRECTION	PREDICTED TEMP °F AT PLATEAU	ACTUAL TEMP °F	MAXIMUM PREDICTED MOVEMENT AT 557°F	CALCULATED MOVEMENT AT ACTUAL READING	INITIAL/ DATE	COMMENTS
SIS-1	063	INSIDE CRANE WALL/AZ321	725’	X (AXIAL)	350°(345°-355°)		+0.9079”			
SIS-3	063	INSIDE CRANE WALL/AZ40	726’	SX* (LATERAL)	350°(345°-355°)		-0.9959”			
SIS-4	063	INSIDE CRANE WALL/AZ42	725’	SX* (LATERAL)	350°(345°-355°)		-0.7704”			
SIS-5	063	INSIDE CRANE WALL/AZ32	723’	SZ* (LATERAL)	350°(345°-355°)		-0.8162”			
SIS-9	063	INSIDE CRANE WALL/AZ221	728’	Y (VERTICAL)	350°(345°-355°)		+0.3523”			
SIS-10	063	INSIDE CRANE WALL/AZ218	723’	SX* (LATERAL)	350°(345°-355°)		+0.4912”			
SIS-11	063	INSIDE CRANE WALL/AZ302	722’	SX* (AXIAL)	350°(345°-355°)		-1.1416”			
SIS-11A	063	INSIDE CRANE WALL/AZ302	722’	SZ* (LATERAL)	350°(345°-355°)		+0.4564”			
SIS-12	063	INSIDE CRANE WALL/AZ300	725’	SZ* (LATERAL)	350°(345°-355°)		-0.6812”			
SIS-14	063	INSIDE CRANE WALL/AZ42	729’	SZ* (LATERAL)	350°(345°-355°)		+0.9033”			

Attachment 5
(Page 14 of 18)

INSTRUMENTED THERMAL MONITORING POINTS 350° (345°-355°) TEMPERATURE DATA READINGS

Date _____

ALL OTHER SYSTEM MONITORING POINTS										
MONITOR POINT ID	SYS	LOCATION	ELEV.	DIRECTION	PREDICTED TEMP °F AT PLATEAU	ACTUAL TEMP °F	MAXIMUM PREDICTED MOVEMENT AT 557°F	CALCULATED MOVEMENT AT ACTUAL READING	INITIAL/ DATE	COMMENTS
SIS-15	063	INSIDE CRANE WALL/AZ225	720’	Z (LATERAL)	350°(345°-355°)		+1.2699”			
SIS-16	063	INSIDE CRANE WALL/AZ135	722’	SX* (LATERAL)	350°(345°-355°)		+0.6019”			
SIS-17	063	INSIDE CRANE WALL/AZ197	721’	SZ* (AXIAL)	350°(345°-355°)		+0.9169”			
SIS-19	063	INSIDE CRANE WALL/AZ188	725’	Y (VERTICAL)	350°(345°-355°)		+0.4105”			
SIS-20	063	INSIDE CRANE WALL/AZ37	725’	Z (LATERAL)	350°(345°-355°)		-0.7609”			
SIS-21	063	INSIDE CRANE WALL/AZ35	731’	SX* (LATERAL)	350°(345°-355°)		+0.4311”			

Attachment 5
(Page 15 of 18)

INSTRUMENTED THERMAL MONITORING POINTS 350° (345°-355°) TEMPERATURE DATA READINGS

Date _____

ALL OTHER SYSTEM MONITORING POINTS										
MONITOR POINT ID	SYS	LOCATION	ELEV.	DIRECTION	PREDICTED TEMP °F AT PLATEAU	ACTUAL TEMP °F	MAXIMUM PREDICTED MOVEMENT AT 557°F	CALCULATED MOVEMENT AT ACTUAL READING	INITIAL/ DATE	COMMENTS
RCS-1	068	INSIDE CRANE WALL/AZ109	722’	X (LATERAL)	350°(345°-355°)		SURGE LINE			
RCS-2	068	INSIDE CRANE WALL/AZ92	723’	Z (LATERAL)	350°(345°-355°)		-2.212”			
RCS-3	068	INSIDE CRANE WALL/AZ104	783’	Y (VERTICAL)	350°(345°-355°)		+2.6907”			
RCS-4	068	INSIDE CRANE WALL/AZ34	720’	X (LATERAL)	350°(345°-355°)		-1.8008”			
RCS-5	068	INSIDE CRANE WALL/AZ98	733’	SX* (LATERAL)	350°(345°-355°)		-0.7884”			
RCS-6	068	INSIDE CRANE WALL/AZ95	720’	Z (AXIAL)	350°(345°-355°)		+1.1741”			
RCS-7	068	INSIDE CRANE WALL/AZ104	733’	Y (VERTICAL)	350°(345°-355°)		+0.7693”			
RCS-8	068	INSIDE CRANE WALL/AZ92	777’	Y (VERTICAL)	350°(345°-355°)		+2.8193”			
RCS-9	068	INSIDE CRANE WALL/AZ90	778’	Y (VERTICAL)	350°(345°-355°)		+2.7680”			
RCS-10	068	INSIDE CRANE WALL/AZ135	776’	Y (VERTICAL)	350°(345°-355°)		+2.7166”			

Attachment 5
(Page 16 of 18)

INSTRUMENTED THERMAL MONITORING POINTS 350° (345°-355°) TEMPERATURE DATA READINGS

Date _____

ALL OTHER SYSTEM MONITORING POINTS										
MONITOR POINT ID	SYS	LOCATION	ELEV.	DIRECTION	PREDICTED TEMP °F AT PLATEAU	ACTUAL TEMP °F	MAXIMUM PREDICTED MOVEMENT AT 557°F	CALCULATED MOVEMENT AT ACTUAL READING	INITIAL/ DATE	COMMENTS
RCS-11	068	INSIDE CRANE WALL/AZ104	761’	Z (AXIAL)	350°(345°-355°)		-0.2539”			
RCS-12	068	INSIDE CRANE WALL/AZ87	747’	Y (VERTICAL)	350°(345°-355°)		+2.5554”			
RCS-12A	068	INSIDE CRANE WALL/AZ87	747’	SZ* (LATERAL)	350°(345°-355°)		+0.3065”			
RCS-13	068	INSIDE CRANE WALL/AZ99	781’	Y (VERTICAL)	350°(345°-355°)		+4.6356”			
RCS-14	068	INSIDE CRANE WALL/AZ41	704’	SZ* (LATERAL)	350°(345°-355°)		+1.4031”			
RCS-15	068	INSIDE CRANE WALL/AZ141	704’	SZ* (LATERAL)	350°(345°-355°)		+1.0580”			
RCS-16	068	INSIDE CRANE WALL/AZ322	704’	SZ* (LATERAL)	350°(345°-355°)		-0.7987”			
RCS-17	068	INSIDE CRANE WALL/AZ200	723’	X (LATERAL)	350°(345°-355°)		-0.3299”			
RCS-18	068	INSIDE CRANE WALL/AZ300	722’	X (LATERAL)	350°(345°-355°)		-0.8566”			
RCS-19	068	INSIDE CRANE WALL/AZ200	723’	Z (AXIAL)	350°(345°-355°)		-0.7212”			

Attachment 5
(Page 17 of 18)

INSTRUMENTED THERMAL MONITORING POINTS 350° (345°-355°) TEMPERATURE DATA READINGS

Date _____

ALL OTHER SYSTEM MONITORING POINTS										
MONITOR POINT ID	SYS	LOCATION	ELEV.	DIRECTION	PREDICTED TEMP °F AT PLATEAU	ACTUAL TEMP °F	MAXIMUM PREDICTED MOVEMENT AT 557°F	CALCULATED MOVEMENT AT ACTUAL READING	INITIAL/ DATE	COMMENTS
RCS-20	068	INSIDE CRANE WALL/AZ308	722’	X (LATERAL)*	350°(345°-355°)		-0.9321”			
RCS-21	068	INSIDE CRANE WALL/AZ151	755’	Y (VERTICAL)	350°(345°-355°)		+1.8255”			
RCS-23	068	INSIDE CRANE WALL/AZ151	752'	SZ* (LATERAL)	350°(345°-355°)		+0.2618”			
RCS-24	068	INSIDE CRANE WALL/AZ104	775’	Y (VERTICAL)	350°(345°-355°)		+2.6702			

Attachment 5
(Page 18 of 18)

INSTRUMENTED THERMAL MONITORING POINTS 350° (345°-355°) TEMPERATURE DATA READINGS

Date _____

ALL OTHER SYSTEM MONITORING POINTS										
MONITOR POINT ID	SYS	LOCATION	ELEV.	DIRECTION	PREDICTED TEMP °F AT PLATEAU	ACTUAL TEMP °F	MAXIMUM PREDICTED MOVEMENT AT 557°F	CALCULATED MOVEMENT AT ACTUAL READING	INITIAL/ DATE	COMMENTS
RHR-1	074	INSIDE CRANE WALL/AZ351	707’	SX* (LATERAL)	350°(345°-355°)		+1.4846”			
RHR-2	074	INSIDE CRANE WALL/AZ322	707’	SZ* (AXIAL)	350°(345°-355°)		-0.7466”			
RHR-4	074	INSIDE CRANE WALL/AZ349	719’	Z (LATERAL)	350°(345°-355°)		-1.1988”			
RHR-5	074	V-A11	718	Z (LATERAL)	350°(345°-355°)		-0.7721”			

Attachment 6
(Page 1 of 18)

INSTRUMENTED THERMAL MONITORING POINTS 450° (445°-455°) TEMPERATURE DATA READINGS

Date _____

NUCLEAR STEAM SUPPLY SYSTEM LOOP MONITORING POINTS									
MONITOR POINT ID	SYS	LOCATION	DIRECTION	PREDICTED TEMP °F AT PLATEAU	ACTUAL TEMP °F	MAXIMUM PREDICTED MOVEMENT AT 557°F	CALCULATED MOVEMENT AT ACTUAL READING	INITIAL/ DATE	COMMENTS
RC-1	068	TOP S.G. #1	+Y	450°(445°-455°)		+2.739”			
RC-2	068	TOP S.G. #2	+Y	450°(445°-455°)		+2.739”			
RC-3	068	TOP S.G. #3	+Y	450°(445°-455°)		+2.739”			
RC-4	068	TOP S.G. #4	+Y	450°(445°-455°)		+2.739”			
RC-5	068	PZR TOP	+Y	450°(445°-455°)		+2.68”			
RC-6	068	TOP S.G. #1	-X	450°(445°-455°)		-1.794”			
RC-7	068	TOP S.G. #2	+X	450°(445°-455°)		+1.794”			
RC-8	068	TOP S.G. #3	+X	450°(445°-455°)		+1.794”			
RC-9	068	TOP S.G. #4	-X	450°(445°-455°)		-1.794”			
RC-10	068	RCP #1	-X	450°(445°-455°)		-1.31”			
RC-11	068	RCP #2	+X	450°(445°-455°)		+1.31”			
RC-12	068	RCP #3	+X	450°(445°-455°)		+1.31”			
RC-13	068	RCP #4	-X	450°(445°-455°)		-1.31”			
RC-14	068	HOT LEG #1	+Z	450°(445°-455°)		+0.3”			
RC-15	068	HOT LEG #1	+Y	450°(445°-455°)		+0.034”			
RC-16	068	CROSS-OVER LEG #1	+Z	450°(445°-455°)		+0.873”			
RC-17	068	CROSS-OVER LEG #1	+Y	450°(445°-455°)		-0.677”			

Attachment 6
(Page 2 of 18)

INSTRUMENTED THERMAL MONITORING POINTS 450° (445°-455°) TEMPERATURE DATA READINGS

Date _____

NUCLEAR STEAM SUPPLY SYSTEM LOOP MONITORING POINTS									
MONITOR POINT ID	SYS	LOCATION	DIRECTION	PREDICTED TEMP °F AT PLATEAU	ACTUAL TEMP °F	MAXIMUM PREDICTED MOVEMENT AT 557°F	CALCULATED MOVEMENT AT ACTUAL READING	INITIAL/ DATE	COMMENTS
RC-18	068	COLD LEG #1	+Z	450°(445°-455°)		+0.866”			
RC-19	068	COLD LEG #1	-Y	450°(445°-455°)		-0.023”			
RC-20	068	HOT LEG #2	+Z	450°(445°-455°)		+0.3”			
RC-21	068	HOT LEG #2	+Y	450°(445°-455°)		+0.034”			
RC-22	068	CROSS-OVER LEG #2	+Z	450°(445°-455°)		+0.873”			
RC-23	068	CROSS-OVER LEG #2	+Y	450°(445°-455°)		-0.677”			
RC-24	068	COLD LEG #2	+Z	450°(445°-455°)		+0.866”			
RC-25	068	COLD LEG #2	-Y	450°(445°-455°)		-0.023”			
RC-26	068	HOT LEG #3	-Z	450°(445°-455°)		-0.3”			
RC-27	068	HOT LEG #3	+Y	450°(445°-455°)		+0.034”			
RC-28	068	CROSS-OVER LEG #3	-Z	450°(445°-455°)		-0.873"			
RC-29	068	CROSS-OVER LEG #3	+Y	450°(445°-455°)		-0.677”			
RC-30	068	COLD LEG #3	-Z	450°(445°-455°)		-0.866”			
RC-31	068	COLD LEG #3	-Y	450°(445°-455°)		-0.023”			
RC-32	068	HOT LEG #4	-Z	450°(445°-455°)		-0.3”			
RC-33	068	HOT LEG #4	+Y	450°(445°-455°)		+0.034”			

Attachment 6
(Page 3 of 18)

INSTRUMENTED THERMAL MONITORING POINTS 450° (445°-455°) TEMPERATURE DATA READINGS

Date _____

NUCLEAR STEAM SUPPLY SYSTEM LOOP MONITORING POINTS									
MONITOR POINT ID	SYS	LOCATION	DIRECTION	PREDICTED TEMP °F AT PLATEAU	ACTUAL TEMP °F	MAXIMUM PREDICTED MOVEMENT AT 557°F	CALCULATED MOVEMENT AT ACTUAL READING	INITIAL/ DATE	COMMENTS
RC-34	068	CROSS-OVER LEG #4	-Z	450°(445°-455°)		-0.873”			
RC-35	068	CROSS-OVER LEG #4	+Y	450°(445°-455°)		-0.667”			
RC-36	068	COLD LEG #4	-Z	450°(445°-455°)		-0.866”			
RC-37	068	COLD LEG #4	-Y	450°(445°-455°)		-0.023”			
RC-38	068	PZR TOP	+X	450°(445°-455°)		+0.18”			

Attachment 6
(Page 4 of 18)

INSTRUMENTED THERMAL MONITORING POINTS 450° (445°-455°) TEMPERATURE DATA READINGS

Date _____

ALL OTHER SYSTEM MONITORING POINTS										
MONITOR POINT ID	SYS	LOCATION	ELEV.	DIRECTION	PREDICTED TEMP °F AT PLATEAU	ACTUAL TEMP °F	MAXIMUM PREDICTED MOVEMENT AT 557°F	CALCULATED MOVEMENT AT ACTUAL READING	INITIAL /DATE	COMMENTS
MS-1	001	INSIDE CRANE WALL/AZ4	761’	Y (VERTICAL)	450°(445°-455°)		+1.3716”			
MS-2	001	INSIDE CRANE WALL/AZ4	737’	Z (AXIAL)	450°(445°-455°)		+1.8972”			
MS-3	001	INSIDE CRANE WALL/AZ5	733’	X (LATERAL)	450°(445°-455°)		+0.8548”			
MS-4	001	INSIDE CRANE WALL/AZ10	733’	Y (VERTICAL)	450°(445°-455°)		-0.7987”			
MS-5	001	INSIDE CRANE WALL/AZ175	761’	Y (VERTICAL)	450°(445°-455°)		+1.4567”			
MS-6	001	INSIDE CRANE WALL/AZ175	744’	Z (AXIAL)	450°(445°-455°)		-1.7413”			
MS-7	001	INSIDE CRANE WALL/AZ169	737’	X (LATERAL)	450°(445°-455°)		+0.9885”			
MS-8	001	INSIDE CRANE WALL/AZ169	737’	Y (VERTICAL)	450°(445°-455°)		-0.7272”			
MS-9	001	INSIDE CRANE WALL/AZ183	756’	Y (VERTICAL)	450°(445°-455°)		+1.5027”			
MS-10	001	INSIDE CRANE WALL/AZ184	738’	Z (AXIAL)	450°(445°-455°)		-2.1203”			

Attachment 6
(Page 5 of 18)

INSTRUMENTED THERMAL MONITORING POINTS 450° (445°-455°) TEMPERATURE DATA READINGS

Date _____

ALL OTHER SYSTEM MONITORING POINTS										
MONITOR POINT ID	SYS	LOCATION	ELEV.	DIRECTION	PREDICTED TEMP °F AT PLATEAU	ACTUAL TEMP °F	MAXIMUM PREDICTED MOVEMENT AT 557°F	CALCULATED MOVEMENT AT ACTUAL READING	INITIAL /DATE	COMMENTS
MS-11	001	INSIDE CRANE WALL/AZ169	737’	X (LATERAL)	450°(445°-455°)		+1.3459”			
MS-12	001	INSIDE CRANE WALL/AZ171	737’	Y (VERTICAL)	450°(445°-455°)		-0.5582”			
MS-13	001	INSIDE CRANE WALL/AZ171	760’	Y (VERTICAL)	450°(445°-455°)		+1.4411”			
MS-14	001	INSIDE CRANE WALL/AZ171	737’	Z (AXIAL)	450°(445°-455°)		+1.9760”			
MS-15	001	OUTSIDE CRANE WALL/AZ171	737’	X (LATERAL)	450°(445°-455°)		+12281”			
MS-16	001	OUTSIDE CRANE WALL/AZ171	737’	Y (VERTICAL)	450°(445°-455°)		-0.8978”			
MS-17	001	OUTSIDE CRANE WALL/AZ89	737’	X (LATERAL)	450°(445°-455°)		+12.0000”			
MS-18	001	OUTSIDE CRANE WALL/AZ89	737’	X (LATERAL)	450°(445°-455°)		+13.0000”			
MS-19	001	K-T15	723’	X (LATERAL)	450°(445°-455°)		+8.1300”			
MS-20	001	K-T15	723’	Z (LATERAL)	450°(445°-455°)		+7.6000”			
MS-21	001	K-T15	723’	X (LATERAL)	450°(445°-455°)		+7.8000”			
MS-22	001	K-T15	723’	Z (LATERAL)	450°(445°-455°)		-7.3000”			

Attachment 6
(Page 6 of 18)

INSTRUMENTED THERMAL MONITORING POINTS 450° (445°-455°) TEMPERATURE DATA READINGS

Date _____

ALL OTHER SYSTEM MONITORING POINTS										
MONITOR POINT ID	SYS	LOCATION	ELEV.	DIRECTION	PREDICTED TEMP °F AT PLATEAU	ACTUAL TEMP °F	MAXIMUM PREDICTED MOVEMENT AT 557°F	CALCULATED MOVEMENT AT ACTUAL READING	INITIAL /DATE	COMMENTS
MS-23	001	M-T15	722’	X (LATERAL)	450°(445°-455°)		+5.0000”			
MS-24	001	M-T15	722’	Z (AXIAL)	450°(445°-455°)		-5.6600”			
MS-25	001	M-T15	723’	X (LATERAL)	450°(445°-455°)		+5.0000			
MS-26	001	M-T15	723’	Z (AXIAL)	450°(445°-455°)		-5.9100”			
MS-27	001	J-T12	718’	Y (VERTICAL)	450°(445°-455°)		-1.5200”			
MS-28	001	J-T12	718’	Z (LATERAL)	450°(445°-455°)		+1.0300”			
MS-29	001	J-T10	727’	Z (LATERAL)	450°(445°-455°)		+2.0000”			
MS-30	001	J-T10	718’	X (LATERAL)	450°(445°-455°)		-2.2500”			
MS-31	001	G-T10	753’	Z-(AXIAL)	450°(445°-455°)		-1.3000”			
MS-32	001	G-T10	753’	X (LATERAL)	450°(445°-455°)		-1.9000”			

Attachment 6
(Page 7 of 18)

INSTRUMENTED THERMAL MONITORING POINTS 450° (445°-455°) TEMPERATURE DATA READINGS

Date _____

ALL OTHER SYSTEM MONITORING POINTS										
MONITOR POINT ID	SYS	LOCATION	ELEV.	DIRECTION	PREDICTED TEMP °F AT PLATEAU	ACTUAL TEMP °F	MAXIMUM PREDICTED MOVEMENT AT 557°F	CALCULATED MOVEMENT AT ACTUAL READING	INITIAL/ DATE	COMMENTS
FW-1	003	AZ21	759’	SX* (AXIAL)	450°(445°-455°)		+1.0198”			
FW-2	003	SOUTH VALVE ROOM/U-6	737’	Y (VERTICAL)	450°(445°-455°)		-0.4951”			
FW-3	003	SOUTH VALVE ROOM/U-6	737’	Z (LATERAL)	450°(445°-455°)		-0.9507”			
FW-4	003	INSIDE CRANE WALL/AZ280	759’	SX* (LATERAL)	450°(445°-455°)		+1.0930”			
FW-5	003	INSIDE CRANE WALL/AZ352	754’	Y (VERTICAL)	450°(445°-455°)		+0.6810”			
FW-6	003	INSIDE CRANE WALL/AZ352	733’	Z (AXIAL)	450°(445°-455°)		+0.8359”			
FW-7	003	INSIDE CRANE WALL/AZ199	759’	SX* (LATERAL)	450°(445°-455°)		-1.1612”			
FW-9	003	H-A15	734’	Z (LATERAL)	450°(445°-455°)		+0.9589”			
FW-10	003	H-A15	730’	X (LATERAL)	450°(445°-455°)		+0.6386”			
FW-11	003	AZ100	759’	SX* (LATERAL)	450°(445°-455°)		+0.8975”			
FW-12	003	AZ100	737’	Y (VERTICAL)	450°(445°-455°)		-0.6230”			

Attachment 6
(Page 8 of 18)

INSTRUMENTED THERMAL MONITORING POINTS 450° (445°-455°) TEMPERATURE DATA READINGS

Date _____

ALL OTHER SYSTEM MONITORING POINTS										
MONITOR POINT ID	SYS	LOCATION	ELEV.	DIRECTION	PREDICTED TEMP °F AT PLATEAU	ACTUAL TEMP °F	MAXIMUM PREDICTED MOVEMENT AT 557°F	CALCULATED MOVEMENT AT ACTUAL READING	INITIAL/ DATE	COMMENTS
FW-13	003	AZ170	737’	Z (LATERAL)	450°(445°-455°)		+0.8941”			
FW-14	003	U-A14	752’	X (LATERAL)	450°(445°-455°)		+1.3257”			
FW-15	003	U-A14	752’	Y (VERTICAL)	450°(445°-455°)		+0.8308”			
FW-17	003	U-A14	748’	Z (LATERAL)	450°(445°-455°)		-0.8581”			
FW-20 (LOOP3)	003	CRANE WALL/AZ188	726’	X (AXIAL)	450°(445°-455°)		+0.7584”			
FW-21 (LOOP3)	003	CRANE WALL/AZ188	726’	Z (LATERAL)	450°(445°-455°)		+1.4141”			
FW-22 (LOOP4)	003	CRANE WALL/AZ352	726’	X (AXIAL)	450°(445°-455°)		+0.7539”			
FW-23 (LOOP4)	003	CRANE WALL/AZ352	726’	Z (LATERAL)	450°(445°-455°)		-1.4160”			

Attachment 6
(Page 9 of 18)

INSTRUMENTED THERMAL MONITORING POINTS 450° (445°-455°) TEMPERATURE DATA READINGS

Date _____

ALL OTHER SYSTEM MONITORING POINTS										
MONITOR POINT ID	SYS	LOCATION	ELEV.	DIRECTION	PREDICTED TEMP °F AT PLATEAU	ACTUAL TEMP °F	MAXIMUM PREDICTED MOVEMENT AT 557°F	CALCULATED MOVEMENT AT ACTUAL READING	INITIAL/ DATE	COMMENTS
SGBD-4A	015	INSIDE CRANE WALL/AZ135	728’	SZ* (AXIAL)	450°(445°-455°)		+1.5868”			
SGBD-5	015	INSIDE CRANE WALL/AZ175	728’	X (LATERAL)	450°(445°-455°)		-0.6584”			
SGBD-6	015	INSIDE CRANE WALL/AZ162	730’	Z (LATERAL)	450°(445°-455°)		+1.5736”			
SGBD-9	015	INSIDE CRANE WALL/AZ59	709’	SZ* (AXIAL)	450°(445°-455°)		+1.6644”			
SGBD-10	015	INSIDE CRANE WALL/AZ14	709’	SY* (VERTICAL)	450°(445°-455°)		-0.8433			
SGBD-11	015	INSIDE CRANE WALL/AZ137	733’	Y (VERTICAL)	450°(445°-455°)		+0.3236”			
SGBD-12	015	INSIDE CRANE WALL/AZ225	731’	Y (VERTICAL)	450°(445°-455°)		-0.0590”			
SGBD-13	015	INSIDE CRANE WALL/AZ185	733’	SY* (VERTICAL)	450°(445°-455°)		+0.6081”			
SGBD-14	015	INSIDE CRANE WALL/AZ200	708’	Y (VERTICAL)	450°(445°-455°)		-0.6283”			
SGBD-15	015	INSIDE CRANE WALL/AZ126	708’	SX* (LATERAL)	450°(445°-455°)		+4.2207”			

Attachment 6
(Page 10 of 18)

INSTRUMENTED THERMAL MONITORING POINTS 450° (445°-455°) TEMPERATURE DATA READINGS

Date _____

ALL OTHER SYSTEM MONITORING POINTS										
MONITOR POINT ID	SYS	LOCATION	ELEV.	DIRECTION	PREDICTED TEMP °F AT PLATEAU	ACTUAL TEMP °F	MAXIMUM PREDICTED MOVEMENT AT 557°F	CALCULATED MOVEMENT AT ACTUAL READING	INITIAL/ DATE	COMMENTS
SGBD-16	015	INSIDE CRANE WALL/AZ10	708’	Y (VERTICAL)	450°(445°-455°)		-1.2471”			
SGBD-17	015	INSIDE CRANE WALL/AZ60	708’	SX* (LATERAL)	450°(445°-455°)		+4.0890”			
SGBD-22	015	OUTSIDE CRANE WALL/U-A15	745’	X (LATERAL)	450°(445°-455°)		-1.1356”			

Attachment 6
(Page 11 of 18)

INSTRUMENTED THERMAL MONITORING POINTS 450° (445°-455°) TEMPERATURE DATA READINGS

Date _____

ALL OTHER SYSTEM MONITORING POINTS										
MONITOR POINT ID	SYS	LOCATION	ELEV.	DIRECTION	PREDICTED TEMP °F AT PLATEAU	ACTUAL TEMP °F	MAXIMUM PREDICTED MOVEMENT AT 557°F	CALCULATED MOVEMENT AT ACTUAL READING	INITIAL/ DATE	COMMENTS
CVCS-2	062	INSIDE CRANE WALL/AZ81	703’	SZ* (LATERAL)	450°(445°-455°)		+0.7296”			
CVCS-4	062	INSIDE CRANE WALL/AZ329	712’	SZ* (AXIAL)	450°(445°-455°)		+1.3237”			
CVCS-5	062	INSIDE CRANE WALL/AZ125	711’	SZ* (LATERAL)	450°(445°-455°)		+2.1542”			
CVCS-6	062	INSIDE CRANE WALL/AZ152	727’	SZ* (AXIAL)	450°(445°-455°)		-0.9446”			
CVCS-7	062	INSIDE CRANE WALL/AZ123	718’	SX* (LATERAL)	450°(445°-455°)		+0.8210”			
CVCS-8	062	INSIDE CRANE WALL/AZ43	727’	SX* (LATERAL)	450°(445°-455°)		+2.6284”			
CVCS-9	062	INSIDE CRANE WALL/AZ43	727’	SZ* (AXIAL)	450°(445°-455°)		-1.1833”			
CVCS-10	062	INSIDE CRANE WALL/AZ95	729’	SX* (LATERAL)	450°(445°-455°)		+1.4122”			
CVCS-11	062	INSIDE CRANE WALL/AZ128	728’	SX* (LATERAL)	450°(445°-455°)		-0.2603”			

Attachment 6
(Page 12 of 18)

INSTRUMENTED THERMAL MONITORING POINTS 450° (445°-455°) TEMPERATURE DATA READINGS

Date _____

ALL OTHER SYSTEM MONITORING POINTS										
MONITOR POINT ID	SYS	LOCATION	ELEV.	DIRECTION	PREDICTED TEMP °F AT PLATEAU	ACTUAL TEMP °F	MAXIMUM PREDICTED MOVEMENT AT 557°F	CALCULATED MOVEMENT AT ACTUAL READING	INITIAL/ DATE	COMMENTS
CVCS-12	062	INSIDE CRANE WALL/AZ328	727’	SX* (LATERAL)	450°(445°-455°)		+3.592”			
CVCS-13	062	INSIDE CRANE WALL/AZ328	727’	SZ* (AXIAL)	450°(445°-455°)		+2.6064”			
CVCS-14	062	INSIDE CRANE WALL/AZ343	727’	SX* (LATERAL)	450°(445°-455°)		+2.8029”			
CVCS-15	062	INSIDE CRANE WALL/AZ343	727’	SZ* (AXIAL)	450°(445°-455°)		+2.6743”			
CVCS-16	062	INSIDE CRANE WALL/AZ107	730’	Y (VERTICAL)	450°(445°-455°)		+1.7592”			
CVCS-17	062	INSIDE CRANE WALL/AZ210	726’	X (LATERAL)	450°(445°-455°)		+0.7413”			
CVCS-18	062	INSIDE CRANE WALL/AZ210	727’	SX* (LATERAL)	450°(445°-455°)		+2.0678”			
CVCS-20	062	INSIDE CRANE WALL/AZ150	728’	X (LATERAL)	450°(445°-455°)		-0.8519”			
CVCS-21	062	INSIDE CRANE WALL/AZ178	728’	Y (VERTICAL)	450°(445°-455°)		+0.3711”			

Attachment 6
(Page 13 of 18)

INSTRUMENTED THERMAL MONITORING POINTS 450° (445°-455°) TEMPERATURE DATA READINGS

Date _____

ALL OTHER SYSTEM MONITORING POINTS										
MONITOR POINT ID	SYS	LOCATION	ELEV.	DIRECTION	PREDICTED TEMP °F AT PLATEAU	ACTUAL TEMP °F	MAXIMUM PREDICTED MOVEMENT AT 557°F	CALCULATED MOVEMENT AT ACTUAL READING	INITIAL/ DATE	COMMENTS
SIS-1	063	INSIDE CRANE WALL/AZ321	725’	X (AXIAL)	450°(445°-455°)		+0.9079”			
SIS-3	063	INSIDE CRANE WALL/AZ40	726’	SX* (LATERAL)	450°(445°-455°)		-0.9959”			
SIS-4	063	INSIDE CRANE WALL/AZ42	725’	SX* (LATERAL)	450°(445°-455°)		-0.7704”			
SIS-5	063	INSIDE CRANE WALL/AZ32	723’	SZ* (LATERAL)	450°(445°-455°)		-0.8162”			
SIS-9	063	INSIDE CRANE WALL/AZ221	728’	Y (VERTICAL)	450°(445°-455°)		+0.3523”			
SIS-10	063	INSIDE CRANE WALL/AZ218	723’	SX* (LATERAL)	450°(445°-455°)		+0.4912”			
SIS-11	063	INSIDE CRANE WALL/AZ302	722’	SX* (AXIAL)	450°(445°-455°)		-1.1416”			
SIS-11A	063	INSIDE CRANE WALL/AZ302	722’	SZ* (LATERAL)	450°(445°-455°)		+0.4564”			
SIS-12	063	INSIDE CRANE WALL/AZ300	725’	SZ* (LATERAL)	450°(445°-455°)		-0.6812”			
SIS-14	063	INSIDE CRANE WALL/AZ42	729’	SZ* (LATERAL)	450°(445°-455°)		+0.9033”			

Attachment 6
(Page 14 of 18)

INSTRUMENTED THERMAL MONITORING POINTS 450° (445°-455°) TEMPERATURE DATA READINGS

Date _____

ALL OTHER SYSTEM MONITORING POINTS										
MONITOR POINT ID	SYS	LOCATION	ELEV.	DIRECTION	PREDICTED TEMP °F AT PLATEAU	ACTUAL TEMP °F	MAXIMUM PREDICTED MOVEMENT AT 557°F	CALCULATED MOVEMENT AT ACTUAL READING	INITIAL/ DATE	COMMENTS
SIS-15	063	INSIDE CRANE WALL/AZ225	720’	Z (LATERAL)	450°(445°-455°)		+1.2699”			
SIS-16	063	INSIDE CRANE WALL/AZ135	722’	SX* (LATERAL)	450°(445°-455°)		+0.6019”			
SIS-17	063	INSIDE CRANE WALL/AZ197	721’	SZ* (AXIAL)	450°(445°-455°)		+0.9169”			
SIS-19	063	INSIDE CRANE WALL/AZ188	725’	Y (VERTICAL)	450°(445°-455°)		+0.4105”			
SIS-20	063	INSIDE CRANE WALL/AZ37	725’	Z (LATERAL)	450°(445°-455°)		-0.7609”			
SIS-21	063	INSIDE CRANE WALL/AZ35	731’	SX* (LATERAL)	450°(445°-455°)		+0.4311”			

Attachment 6
(Page 15 of 18)

INSTRUMENTED THERMAL MONITORING POINTS 450° (445°-455°) TEMPERATURE DATA READINGS

Date _____

ALL OTHER SYSTEM MONITORING POINTS										
MONITOR POINT ID	SYS	LOCATION	ELEV.	DIRECTION	PREDICTED TEMP °F AT PLATEAU	ACTUAL TEMP °F	MAXIMUM PREDICTED MOVEMENT AT 557°F	CALCULATED MOVEMENT AT ACTUAL READING	INITIAL/ DATE	COMMENTS
RCS-1	068	INSIDE CRANE WALL/AZ109	722’	X (LATERAL)	450°(445°-455°)		SURGE LINE			
RCS-2	068	INSIDE CRANE WALL/AZ92	723’	Z (LATERAL)	450°(445°-455°)		-2.212”			
RCS-3	068	INSIDE CRANE WALL/AZ104	783’	Y (VERTICAL)	450°(445°-455°)		+2.6907”			
RCS-4	068	INSIDE CRANE WALL/AZ34	720’	X (LATERAL)	450°(445°-455°)		-1.8008”			
RCS-5	068	INSIDE CRANE WALL/AZ98	733’	SX* (LATERAL)	450°(445°-455°)		-0.7884”			
RCS-6	068	INSIDE CRANE WALL/AZ95	720’	Z (AXIAL)	450°(445°-455°)		+1.1741”			
RCS-7	068	INSIDE CRANE WALL/AZ104	733’	Y (VERTICAL)	450°(445°-455°)		+0.7693”			
RCS-8	068	INSIDE CRANE WALL/AZ92	777’	Y (VERTICAL)	450°(445°-455°)		+2.8193”			
RCS-9	068	INSIDE CRANE WALL/AZ90	778’	Y (VERTICAL)	450°(445°-455°)		+2.7680”			
RCS-10	068	INSIDE CRANE WALL/AZ135	776’	Y (VERTICAL)	450°(445°-455°)		+2.7166”			

Attachment 6
(Page 16 of 18)

INSTRUMENTED THERMAL MONITORING POINTS 450° (445°-455°) TEMPERATURE DATA READINGS

Date _____

ALL OTHER SYSTEM MONITORING POINTS										
MONITOR POINT ID	SYS	LOCATION	ELEV.	DIRECTION	PREDICTED TEMP °F AT PLATEAU	ACTUAL TEMP °F	MAXIMUM PREDICTED MOVEMENT AT 557°F	CALCULATED MOVEMENT AT ACTUAL READING	INITIAL/ DATE	COMMENTS
RCS-11	068	INSIDE CRANE WALL/AZ104	761’	Z (AXIAL)	450°(445°-455°)		-0.2539”			
RCS-12	068	INSIDE CRANE WALL/AZ87	747’	Y (VERTICAL)	450°(445°-455°)		+2.5554”			
RCS-12A	068	INSIDE CRANE WALL/AZ87	747’	SZ* (LATERAL)	450°(445°-455°)		+0.3065”			
RCS-13	068	INSIDE CRANE WALL/AZ99	781’	Y (VERTICAL)	450°(445°-455°)		+4.6356”			
RCS-14	068	INSIDE CRANE WALL/AZ41	704’	SZ* (LATERAL)	450°(445°-455°)		+1.4031”			
RCS-15	068	INSIDE CRANE WALL/AZ141	704’	SZ* (LATERAL)	450°(445°-455°)		+1.0580”			
RCS-16	068	INSIDE CRANE WALL/AZ322	704’	SZ* (LATERAL)	450°(445°-455°)		-0.7987”			
RCS-17	068	INSIDE CRANE WALL/AZ200	723’	X (LATERAL)	450°(445°-455°)		-0.3299”			
RCS-18	068	INSIDE CRANE WALL/AZ300	722’	X (LATERAL)	450°(445°-455°)		-0.8566”			
RCS-19	068	INSIDE CRANE WALL/AZ200	723’	Z (AXIAL)	450°(445°-455°)		-0.7212”			

Attachment 6
(Page 17 of 18)

INSTRUMENTED THERMAL MONITORING POINTS 450° (445°-455°) TEMPERATURE DATA READINGS

Date _____

ALL OTHER SYSTEM MONITORING POINTS										
MONITOR POINT ID	SYS	LOCATION	ELEV.	DIRECTION	PREDICTED TEMP °F AT PLATEAU	ACTUAL TEMP °F	MAXIMUM PREDICTED MOVEMENT AT 557°F	CALCULATED MOVEMENT AT ACTUAL READING	INITIAL/ DATE	COMMENTS
RCS-20	068	INSIDE CRANE WALL/AZ308	722’	X (LATERAL)*	450°(445°-455°)		-0.9321”			
RCS-21	068	INSIDE CRANE WALL/AZ151	755’	Y (VERTICAL)	450°(445°-455°)		+1.8255”			
RCS-23	068	INSIDE CRANE WALL/AZ151	752'	SZ* (LATERAL)	450°(445°-455°)		+0.2618”			
RCS-24	068	INSIDE CRANE WALL/AZ104	775’	Y (VERTICAL)	450°(445°-455°)		+2.6702			

Attachment 6
(Page 18 of 18)

INSTRUMENTED THERMAL MONITORING POINTS 450° (445°-455°) TEMPERATURE DATA READINGS

Date _____

ALL OTHER SYSTEM MONITORING POINTS										
MONITOR POINT ID	SYS	LOCATION	ELEV.	DIRECTION	PREDICTED TEMP °F AT PLATEAU	ACTUAL TEMP °F	MAXIMUM PREDICTED MOVEMENT AT 557°F	CALCULATED MOVEMENT AT ACTUAL READING	INITIAL/ DATE	COMMENTS
RHR-1	074	INSIDE CRANE WALL/AZ351	707’	SX* (LATERAL)	450°(445°-455°)		+1.4846”			
RHR-2	074	INSIDE CRANE WALL/AZ322	707’	SZ* (AXIAL)	450°(445°-455°)		-0.7466”			
RHR-4	074	INSIDE CRANE WALL/AZ349	719’	Z (LATERAL)	450°(445°-455°)		-1.1988”			
RHR-5	074	V-A11	718	Z (LATERAL)	450°(445°-455°)		-0.7721”			

Attachment 7
(Page 1 of 18)

INSTRUMENTED THERMAL MONITORING POINTS 557° (553°-560°) TEMPERATURE DATA READINGS

Date _____

NUCLEAR STEAM SUPPLY SYSTEM LOOP MONITORING POINTS									
MONITOR POINT ID	SYS	LOCATION	DIRECTION	PREDICTED TEMP °F AT PLATEAU	ACTUAL TEMP °F	MAXIMUM PREDICTED MOVEMENT AT 557°F	CALCULATED MOVEMENT AT ACTUAL READING	INITIAL/ DATE	COMMENTS
RC-1	068	TOP S.G. #1	+Y	557°(553°-560°)		+2.739”			
RC-2	068	TOP S.G. #2	+Y	557°(553°-560°)		+2.739”			
RC-3	068	TOP S.G. #3	+Y	557°(553°-560°)		+2.739”			
RC-4	068	TOP S.G. #4	+Y	557°(553°-560°)		+2.739”			
RC-5	068	PZR TOP	+Y	557°(553°-560°)		+2.68”			
RC-6	068	TOP S.G. #1	-X	557°(553°-560°)		-1.794”			
RC-7	068	TOP S.G. #2	+X	557°(553°-560°)		+1.794”			
RC-8	068	TOP S.G. #3	+X	557°(553°-560°)		+1.794”			
RC-9	068	TOP S.G. #4	-X	557°(553°-560°)		-1.794”			
RC-10	068	RCP #1	-X	557°(553°-560°)		-1.31”			
RC-11	068	RCP #2	+X	557°(553°-560°)		+1.31”			
RC-12	068	RCP #3	+X	557°(553°-560°)		+1.31”			
RC-13	068	RCP #4	-X	557°(553°-560°)		-1.31”			
RC-14	068	HOT LEG #1	+Z	557°(553°-560°)		+0.3”			
RC-15	068	HOT LEG #1	+Y	557°(553°-560°)		+0.034”			
RC-16	068	CROSS-OVER LEG #1	+Z	557°(553°-560°)		+0.873”			
RC-17	068	CROSS-OVER LEG #1	+Y	557°(553°-560°)		-0.677”			

Attachment 7
(Page 2 of 18)

INSTRUMENTED THERMAL MONITORING POINTS 557° (553°-560°) TEMPERATURE DATA READINGS

Date _____

NUCLEAR STEAM SUPPLY SYSTEM LOOP MONITORING POINTS									
MONITOR POINT ID	SYS	LOCATION	DIRECTION	PREDICTED TEMP °F AT PLATEAU	ACTUAL TEMP °F	MAXIMUM PREDICTED MOVEMENT AT 557°F	CALCULATED MOVEMENT AT ACTUAL READING	INITIAL/ DATE	COMMENTS
RC-18	068	COLD LEG #1	+Z	557°(553°-560°)		+0.866”			
RC-19	068	COLD LEG #1	-Y	557°(553°-560°)		-0.023”			
RC-20	068	HOT LEG #2	+Z	557°(553°-560°)		+0.3”			
RC-21	068	HOT LEG #2	+Y	557°(553°-560°)		+0.034”			
RC-22	068	CROSS-OVER LEG #2	+Z	557°(553°-560°)		+0.873”			
RC-23	068	CROSS-OVER LEG #2	+Y	557°(553°-560°)		-0.677”			
RC-24	068	COLD LEG #2	+Z	557°(553°-560°)		+0.866”			
RC-25	068	COLD LEG #2	-Y	557°(553°-560°)		-0.023”			
RC-26	068	HOT LEG #3	-Z	557°(553°-560°)		-0.3”			
RC-27	068	HOT LEG #3	+Y	557°(553°-560°)		+0.034”			
RC-28	068	CROSS-OVER LEG #3	-Z	557°(553°-560°)		-0.873"			
RC-29	068	CROSS-OVER LEG #3	+Y	557°(553°-560°)		-0.677”			
RC-30	068	COLD LEG #3	-Z	557°(553°-560°)		-0.866”			
RC-31	068	COLD LEG #3	-Y	557°(553°-560°)		-0.023”			
RC-32	068	HOT LEG #4	-Z	557°(553°-560°)		-0.3”			
RC-33	068	HOT LEG #4	+Y	557°(553°-560°)		+0.034”			

Attachment 7
(Page 3 of 18)

INSTRUMENTED THERMAL MONITORING POINTS 557° (553°-560°) TEMPERATURE DATA READINGS

Date _____

NUCLEAR STEAM SUPPLY SYSTEM LOOP MONITORING POINTS									
MONITOR POINT ID	SYS	LOCATION	DIRECTION	PREDICTED TEMP °F AT PLATEAU	ACTUAL TEMP °F	MAXIMUM PREDICTED MOVEMENT AT 557°F	CALCULATED MOVEMENT AT ACTUAL READING	INITIAL/ DATE	COMMENTS
RC-34	068	CROSS-OVER LEG #4	-Z	557°(553°-560°)		-0.873”			
RC-35	068	CROSS-OVER LEG #4	+Y	557°(553°-560°)		-0.667”			
RC-36	068	COLD LEG #4	-Z	557°(553°-560°)		-0.866”			
RC-37	068	COLD LEG #4	-Y	557°(553°-560°)		-0.023”			
RC-38	068	PZR TOP	+X	557°(553°-560°)		+0.18”			

Attachment 7
(Page 4 of 18)

INSTRUMENTED THERMAL MONITORING POINTS 557° (553°-560°) TEMPERATURE DATA READINGS

Date _____

ALL OTHER SYSTEM MONITORING POINTS										
MONITOR POINT ID	SYS	LOCATION	ELEV.	DIRECTION	PREDICTED TEMP °F AT PLATEAU	ACTUAL TEMP °F	MAXIMUM PREDICTED MOVEMENT AT 557°F	CALCULATED MOVEMENT AT ACTUAL READING	INITIAL /DATE	COMMENTS
MS-1	001	INSIDE CRANE WALL/AZ4	761’	Y (VERTICAL)	557°(553°-560°)		+1.3716”			
MS-2	001	INSIDE CRANE WALL/AZ4	737’	Z (AXIAL)	557°(553°-560°)		+1.8972”			
MS-3	001	INSIDE CRANE WALL/AZ5	733’	X (LATERAL)	557°(553°-560°)		+0.8548”			
MS-4	001	INSIDE CRANE WALL/AZ10	733’	Y (VERTICAL)	557°(553°-560°)		-0.7987”			
MS-5	001	INSIDE CRANE WALL/AZ175	761’	Y (VERTICAL)	557°(553°-560°)		+1.4567”			
MS-6	001	INSIDE CRANE WALL/AZ175	744’	Z (AXIAL)	557°(553°-560°)		-1.7413”			
MS-7	001	INSIDE CRANE WALL/AZ169	737’	X (LATERAL)	557°(553°-560°)		+0.9885”			
MS-8	001	INSIDE CRANE WALL/AZ169	737’	Y (VERTICAL)	557°(553°-560°)		-0.7272”			
MS-9	001	INSIDE CRANE WALL/AZ183	756’	Y (VERTICAL)	557°(553°-560°)		+1.5027”			
MS-10	001	INSIDE CRANE WALL/AZ184	738’	Z (AXIAL)	557°(553°-560°)		-2.1203”			

Attachment 7
(Page 5 of 18)

INSTRUMENTED THERMAL MONITORING POINTS 557° (553°-560°) TEMPERATURE DATA READINGS

Date _____

ALL OTHER SYSTEM MONITORING POINTS										
MONITOR POINT ID	SYS	LOCATION	ELEV.	DIRECTION	PREDICTED TEMP °F AT PLATEAU	ACTUAL TEMP °F	MAXIMUM PREDICTED MOVEMENT AT 557°F	CALCULATED MOVEMENT AT ACTUAL READING	INITIAL /DATE	COMMENTS
MS-11	001	INSIDE CRANE WALL/AZ169	737’	X (LATERAL)	557°(553°-560°)		+1.3459”			
MS-12	001	INSIDE CRANE WALL/AZ171	737’	Y (VERTICAL)	557°(553°-560°)		-0.5582”			
MS-13	001	INSIDE CRANE WALL/AZ171	760’	Y (VERTICAL)	557°(553°-560°)		+1.4411”			
MS-14	001	INSIDE CRANE WALL/AZ171	737’	Z (AXIAL)	557°(553°-560°)		+1.9760”			
MS-15	001	OUTSIDE CRANE WALL/AZ171	737’	X (LATERAL)	557°(553°-560°)		+12281”			
MS-16	001	OUTSIDE CRANE WALL/AZ171	737’	Y (VERTICAL)	557°(553°-560°)		-0.8978”			
MS-17	001	OUTSIDE CRANE WALL/AZ89	737’	X (LATERAL)	557°(553°-560°)		+12.0000”			
MS-18	001	OUTSIDE CRANE WALL/AZ89	737’	X (LATERAL)	557°(553°-560°)		+13.0000”			
MS-19	001	K-T15	723’	X (LATERAL)	557°(553°-560°)		+8.1300”			
MS-20	001	K-T15	723’	Z (LATERAL)	557°(553°-560°)		+7.6000”			
MS-21	001	K-T15	723’	X (LATERAL)	557°(553°-560°)		+7.8000”			
MS-22	001	K-T15	723’	Z (LATERAL)	557°(553°-560°)		-7.3000”			

Attachment 7
(Page 6 of 18)

INSTRUMENTED THERMAL MONITORING POINTS 557° (553°-560°) TEMPERATURE DATA READINGS

Date _____

ALL OTHER SYSTEM MONITORING POINTS										
MONITOR POINT ID	SYS	LOCATION	ELEV.	DIRECTION	PREDICTED TEMP °F AT PLATEAU	ACTUAL TEMP °F	MAXIMUM PREDICTED MOVEMENT AT 557°F	CALCULATED MOVEMENT AT ACTUAL READING	INITIAL /DATE	COMMENTS
MS-23	001	M-T15	722’	X (LATERAL)	557°(553°-560°)		+5.0000”			
MS-24	001	M-T15	722’	Z (AXIAL)	557°(553°-560°)		-5.6600”			
MS-25	001	M-T15	723’	X (LATERAL)	557°(553°-560°)		+5.0000			
MS-26	001	M-T15	723’	Z (AXIAL)	557°(553°-560°)		-5.9100”			
MS-27	001	J-T12	718’	Y (VERTICAL)	557°(553°-560°)		-1.5200”			
MS-28	001	J-T12	718’	Z (LATERAL)	557°(553°-560°)		+1.0300”			
MS-29	001	J-T10	727’	Z (LATERAL)	557°(553°-560°)		+2.0000”			
MS-30	001	J-T10	718’	X (LATERAL)	557°(553°-560°)		-2.2500”			
MS-31	001	G-T10	753’	Z-(AXIAL)	557°(553°-560°)		-1.3000”			
MS-32	001	G-T10	753’	X (LATERAL)	557°(553°-560°)		-1.9000”			

Attachment 7
(Page 7 of 18)

INSTRUMENTED THERMAL MONITORING POINTS 557° (553°-560°) TEMPERATURE DATA READINGS

Date _____

ALL OTHER SYSTEM MONITORING POINTS										
MONITOR POINT ID	SYS	LOCATION	ELEV.	DIRECTION	PREDICTED TEMP °F AT PLATEAU	ACTUAL TEMP °F	MAXIMUM PREDICTED MOVEMENT AT 557°F	CALCULATED MOVEMENT AT ACTUAL READING	INITIAL/ DATE	COMMENTS
FW-1	003	AZ21	759’	SX* (AXIAL)	557°(553°-560°)		+1.0198”			
FW-2	003	SOUTH VALVE ROOM/U-6	737’	Y (VERTICAL)	557°(553°-560°)		-0.4951”			
FW-3	003	SOUTH VALVE ROOM/U-6	737’	Z (LATERAL)	557°(553°-560°)		-0.9507”			
FW-4	003	INSIDE CRANE WALL/AZ280	759’	SX* (LATERAL)	557°(553°-560°)		+1.0930”			
FW-5	003	INSIDE CRANE WALL/AZ352	754’	Y (VERTICAL)	557°(553°-560°)		+0.6810”			
FW-6	003	INSIDE CRANE WALL/AZ352	733’	Z (AXIAL)	557°(553°-560°)		+0.8359”			
FW-7	003	INSIDE CRANE WALL/AZ199	759’	SX* (LATERAL)	557°(553°-560°)		-1.1612”			
FW-9	003	H-A15	734’	Z (LATERAL)	557°(553°-560°)		+0.9589”			
FW-10	003	H-A15	730’	X (LATERAL)	557°(553°-560°)		+0.6386”			
FW-11	003	AZ100	759’	SX* (LATERAL)	557°(553°-560°)		+0.8975”			
FW-12	003	AZ100	737’	Y (VERTICAL)	557°(553°-560°)		-0.6230”			

Attachment 7
(Page 8 of 18)

INSTRUMENTED THERMAL MONITORING POINTS 557° (553°-560°) TEMPERATURE DATA READINGS

Date _____

ALL OTHER SYSTEM MONITORING POINTS										
MONITOR POINT ID	SYS	LOCATION	ELEV.	DIRECTION	PREDICTED TEMP °F AT PLATEAU	ACTUAL TEMP °F	MAXIMUM PREDICTED MOVEMENT AT 557°F	CALCULATED MOVEMENT AT ACTUAL READING	INITIAL/ DATE	COMMENTS
FW-13	003	AZ170	737’	Z (LATERAL)	557°(553°-560°)		+0.8941”			
FW-14	003	U-A14	752’	X (LATERAL)	557°(553°-560°)		+1.3257”			
FW-15	003	U-A14	752’	Y (VERTICAL)	557°(553°-560°)		+0.8308”			
FW-17	003	U-A14	748’	Z (LATERAL)	557°(553°-560°)		-0.8581”			
FW-20 (LOOP3)	003	CRANE WALL/AZ188	726’	X (AXIAL)	557°(553°-560°)		+0.7584”			
FW-21 (LOOP3)	003	CRANE WALL/AZ188	726’	Z (LATERAL)	557°(553°-560°)		+1.4141”			
FW-22 (LOOP4)	003	CRANE WALL/AZ352	726’	X (AXIAL)	557°(553°-560°)		+0.7539”			
FW-23 (LOOP4)	003	CRANE WALL/AZ352	726’	Z (LATERAL)	557°(553°-560°)		-1.4160”			

Attachment 7
(Page 9 of 18)

INSTRUMENTED THERMAL MONITORING POINTS 557° (553°-560°) TEMPERATURE DATA READINGS

Date _____

ALL OTHER SYSTEM MONITORING POINTS										
MONITOR POINT ID	SYS	LOCATION	ELEV.	DIRECTION	PREDICTED TEMP °F AT PLATEAU	ACTUAL TEMP °F	MAXIMUM PREDICTED MOVEMENT AT 557°F	CALCULATED MOVEMENT AT ACTUAL READING	INITIAL/ DATE	COMMENTS
SGBD-4A	015	INSIDE CRANE WALL/AZ135	728’	SZ* (AXIAL)	557°(553°-560°)		+1.5868”			
SGBD-5	015	INSIDE CRANE WALL/AZ175	728’	X (LATERAL)	557°(553°-560°)		-0.6584”			
SGBD-6	015	INSIDE CRANE WALL/AZ162	730’	Z (LATERAL)	557°(553°-560°)		+1.5736”			
SGBD-9	015	INSIDE CRANE WALL/AZ59	709’	SZ* (AXIAL)	557°(553°-560°)		+1.6644”			
SGBD-10	015	INSIDE CRANE WALL/AZ14	709’	SY* (VERTICAL)	557°(553°-560°)		-0.8433			
SGBD-11	015	INSIDE CRANE WALL/AZ137	733’	Y (VERTICAL)	557°(553°-560°)		+0.3236”			
SGBD-13	015	INSIDE CRANE WALL/AZ185	733’	SY* (VERTICAL)	557°(553°-560°)		+0.6081”			
SGBD-14	015	INSIDE CRANE WALL/AZ200	708’	Y (VERTICAL)	557°(553°-560°)		-0.6283”			
SGBD-15	015	INSIDE CRANE WALL/AZ126	708’	SX* (LATERAL)	557°(553°-560°)		+4.2207”			
SGBD-16	015	INSIDE CRANE WALL/AZ10	708’	Y (VERTICAL)	557°(553°-560°)		-1.2471”			

Attachment 7
(Page 10 of 18)

INSTRUMENTED THERMAL MONITORING POINTS 557° (553°-560°) TEMPERATURE DATA READINGS

Date _____

ALL OTHER SYSTEM MONITORING POINTS										
MONITOR POINT ID	SYS	LOCATION	ELEV.	DIRECTION	PREDICTED TEMP °F AT PLATEAU	ACTUAL TEMP °F	MAXIMUM PREDICTED MOVEMENT AT 557°F	CALCULATED MOVEMENT AT ACTUAL READING	INITIAL/ DATE	COMMENTS
SGBD-17	015	INSIDE CRANE WALL/AZ60	708’	SX* (LATERAL)	557°(553°-560°)		+4.0890”			
SGBD-22	015	OUTSIDE CRANE WALL/U-A15	745’	X (LATERAL)	557°(553°-560°)		-1.1356”			

Attachment 7
(Page 11 of 18)

INSTRUMENTED THERMAL MONITORING POINTS 557° (553°-560°) TEMPERATURE DATA READINGS

Date _____

ALL OTHER SYSTEM MONITORING POINTS										
MONITOR POINT ID	SYS	LOCATION	ELEV.	DIRECTION	PREDICTED TEMP °F AT PLATEAU	ACTUAL TEMP °F	MAXIMUM PREDICTED MOVEMENT AT 557°F	CALCULATED MOVEMENT AT ACTUAL READING	INITIAL/ DATE	COMMENTS
CVCS-2	062	INSIDE CRANE WALL/AZ81	703’	SZ* (LATERAL)	557°(553°-560°)		+0.7296”			
CVCS-4	062	INSIDE CRANE WALL/AZ329	712’	SZ* (AXIAL)	557°(553°-560°)		+1.3237”			
CVCS-5	062	INSIDE CRANE WALL/AZ125	711’	SZ* (LATERAL)	557°(553°-560°)		+2.1542”			
CVCS-6	062	INSIDE CRANE WALL/AZ152	727’	SZ* (AXIAL)	557°(553°-560°)		-0.9446”			
CVCS-7	062	INSIDE CRANE WALL/AZ123	718’	SX* (LATERAL)	557°(553°-560°)		+0.8210”			
CVCS-8	062	INSIDE CRANE WALL/AZ43	727’	SX* (LATERAL)	557°(553°-560°)		+2.6284”			
CVCS-9	062	INSIDE CRANE WALL/AZ43	727’	SZ* (AXIAL)	557°(553°-560°)		-1.1833”			
CVCS-10	062	INSIDE CRANE WALL/AZ95	729’	SX* (LATERAL)	557°(553°-560°)		+1.4122”			
CVCS-11	062	INSIDE CRANE WALL/AZ128	728’	SX* (LATERAL)	557°(553°-560°)		-0.2603”			

Attachment 7
(Page 12 of 18)

INSTRUMENTED THERMAL MONITORING POINTS 557° (553°-560°) TEMPERATURE DATA READINGS

Date _____

ALL OTHER SYSTEM MONITORING POINTS										
MONITOR POINT ID	SYS	LOCATION	ELEV.	DIRECTION	PREDICTED TEMP °F AT PLATEAU	ACTUAL TEMP °F	MAXIMUM PREDICTED MOVEMENT AT 557°F	CALCULATED MOVEMENT AT ACTUAL READING	INITIAL/ DATE	COMMENTS
CVCS-12	062	INSIDE CRANE WALL/AZ328	727’	SX* (LATERAL)	557°(553°-560°)		+3.592”			
CVCS-13	062	INSIDE CRANE WALL/AZ328	727’	SZ* (AXIAL)	557°(553°-560°)		+2.6064”			
CVCS-14	062	INSIDE CRANE WALL/AZ343	727’	SX* (LATERAL)	557°(553°-560°)		+2.8029”			
CVCS-15	062	INSIDE CRANE WALL/AZ343	727’	SZ* (AXIAL)	557°(553°-560°)		+2.6743”			
CVCS-16	062	INSIDE CRANE WALL/AZ107	730’	Y (VERTICAL)	557°(553°-560°)		+1.7592”			
CVCS-17	062	INSIDE CRANE WALL/AZ210	726’	X (LATERAL)	557°(553°-560°)		+0.7413”			
CVCS-18	062	INSIDE CRANE WALL/AZ210	727’	SX* (LATERAL)	557°(553°-560°)		+2.0678”			
CVCS-20	062	INSIDE CRANE WALL/AZ150	728’	X (LATERAL)	557°(553°-560°)		-0.8519”			
CVCS-21	062	INSIDE CRANE WALL/AZ178	728’	Y (VERTICAL)	557°(553°-560°)		+0.3711”			

Attachment 7
(Page 13 of 18)

INSTRUMENTED THERMAL MONITORING POINTS 557° (553°-560°) TEMPERATURE DATA READINGS

Date _____

ALL OTHER SYSTEM MONITORING POINTS										
MONITOR POINT ID	SYS	LOCATION	ELEV.	DIRECTION	PREDICTED TEMP °F AT PLATEAU	ACTUAL TEMP °F	MAXIMUM PREDICTED MOVEMENT AT 557°F	CALCULATED MOVEMENT AT ACTUAL READING	INITIAL/ DATE	COMMENTS
SIS-1	063	INSIDE CRANE WALL/AZ321	725’	X (AXIAL)	557°(553°-560°)		+0.9079”			
SIS-3	063	INSIDE CRANE WALL/AZ40	726’	SX* (LATERAL)	557°(553°-560°)		-0.9959”			
SIS-4	063	INSIDE CRANE WALL/AZ42	725’	SX* (LATERAL)	557°(553°-560°)		-0.7704”			
SIS-5	063	INSIDE CRANE WALL/AZ32	723’	SZ* (LATERAL)	557°(553°-560°)		-0.8162”			
SIS-9	063	INSIDE CRANE WALL/AZ221	728’	Y (VERTICAL)	557°(553°-560°)		+0.3523”			
SIS-10	063	INSIDE CRANE WALL/AZ218	723’	SX* (LATERAL)	557°(553°-560°)		+0.4912”			
SIS-11	063	INSIDE CRANE WALL/AZ302	722’	SX* (AXIAL)	557°(553°-560°)		-1.1416”			
SIS-11A	063	INSIDE CRANE WALL/AZ302	722’	SZ* (LATERAL)	557°(553°-560°)		+0.4564”			
SIS-12	063	INSIDE CRANE WALL/AZ300	725’	SZ* (LATERAL)	557°(553°-560°)		-0.6812”			
SIS-14	063	INSIDE CRANE WALL/AZ42	729’	SZ* (LATERAL)	557°(553°-560°)		+0.9033”			

Attachment 7
(Page 14 of 18)

INSTRUMENTED THERMAL MONITORING POINTS 557° (553°-560°) TEMPERATURE DATA READINGS

Date _____

ALL OTHER SYSTEM MONITORING POINTS										
MONITOR POINT ID	SYS	LOCATION	ELEV.	DIRECTION	PREDICTED TEMP °F AT PLATEAU	ACTUAL TEMP °F	MAXIMUM PREDICTED MOVEMENT AT 557°F	CALCULATED MOVEMENT AT ACTUAL READING	INITIAL/ DATE	COMMENTS
SIS-15	063	INSIDE CRANE WALL/AZ225	720’	Z (LATERAL)	557°(553°-560°)		+1.2699”			
SIS-16	063	INSIDE CRANE WALL/AZ135	722’	SX* (LATERAL)	557°(553°-560°)		+0.6019”			
SIS-17	063	INSIDE CRANE WALL/AZ197	721’	SZ* (AXIAL)	557°(553°-560°)		+0.9169”			
SIS-19	063	INSIDE CRANE WALL/AZ188	725’	Y (VERTICAL)	557°(553°-560°)		+0.4105”			
SIS-20	063	INSIDE CRANE WALL/AZ37	725’	Z (LATERAL)	557°(553°-560°)		-0.7609”			
SIS-21	063	INSIDE CRANE WALL/AZ35	731’	SX* (LATERAL)	557°(553°-560°)		+0.4311”			

Attachment 7
(Page 15 of 18)

INSTRUMENTED THERMAL MONITORING POINTS 557° (553°-560°) TEMPERATURE DATA READINGS

Date _____

ALL OTHER SYSTEM MONITORING POINTS										
MONITOR POINT ID	SYS	LOCATION	ELEV.	DIRECTION	PREDICTED TEMP °F AT PLATEAU	ACTUAL TEMP °F	MAXIMUM PREDICTED MOVEMENT AT 557°F	CALCULATED MOVEMENT AT ACTUAL READING	INITIAL/ DATE	COMMENTS
RCS-1	068	INSIDE CRANE WALL/AZ109	722’	X (LATERAL)	557°(553°-560°)		SURGE LINE			
RCS-2	068	INSIDE CRANE WALL/AZ92	723’	Z (LATERAL)	557°(553°-560°)		-2.212”			
RCS-3	068	INSIDE CRANE WALL/AZ104	783’	Y (VERTICAL)	557°(553°-560°)		+2.6907”			
RCS-4	068	INSIDE CRANE WALL/AZ34	720’	X (LATERAL)	557°(553°-560°)		-1.8008”			
RCS-5	068	INSIDE CRANE WALL/AZ98	733’	SX* (LATERAL)	557°(553°-560°)		-0.7884”			
RCS-6	068	INSIDE CRANE WALL/AZ95	720’	Z (AXIAL)	557°(553°-560°)		+1.1741”			
RCS-7	068	INSIDE CRANE WALL/AZ104	733’	Y (VERTICAL)	557°(553°-560°)		+0.7693”			
RCS-8	068	INSIDE CRANE WALL/AZ92	777’	Y (VERTICAL)	557°(553°-560°)		+2.8193”			
RCS-9	068	INSIDE CRANE WALL/AZ90	778’	Y (VERTICAL)	557°(553°-560°)		+2.7680”			
RCS-10	068	INSIDE CRANE WALL/AZ135	776’	Y (VERTICAL)	557°(553°-560°)		+2.7166”			

Attachment 7
(Page 16 of 18)

INSTRUMENTED THERMAL MONITORING POINTS 557° (553°-560°) TEMPERATURE DATA READINGS

Date _____

ALL OTHER SYSTEM MONITORING POINTS										
MONITOR POINT ID	SYS	LOCATION	ELEV.	DIRECTION	PREDICTED TEMP °F AT PLATEAU	ACTUAL TEMP °F	MAXIMUM PREDICTED MOVEMENT AT 557°F	CALCULATED MOVEMENT AT ACTUAL READING	INITIAL/ DATE	COMMENTS
RCS-11	068	INSIDE CRANE WALL/AZ104	761’	Z (AXIAL)	557°(553°-560°)		-0.2539”			
RCS-12	068	INSIDE CRANE WALL/AZ87	747’	Y (VERTICAL)	557°(553°-560°)		+2.5554”			
RCS-12A	068	INSIDE CRANE WALL/AZ87	747’	SZ* (LATERAL)	557°(553°-560°)		+0.3065”			
RCS-13	068	INSIDE CRANE WALL/AZ99	781’	Y (VERTICAL)	557°(553°-560°)		+4.6356”			
RCS-14	068	INSIDE CRANE WALL/AZ41	704’	SZ* (LATERAL)	557°(553°-560°)		+1.4031”			
RCS-15	068	INSIDE CRANE WALL/AZ141	704’	SZ* (LATERAL)	557°(553°-560°)		+1.0580”			
RCS-16	068	INSIDE CRANE WALL/AZ322	704’	SZ* (LATERAL)	557°(553°-560°)		-0.7987”			
RCS-17	068	INSIDE CRANE WALL/AZ200	723’	X (LATERAL)	557°(553°-560°)		-0.3299”			
RCS-18	068	INSIDE CRANE WALL/AZ300	722’	X (LATERAL)	557°(553°-560°)		-0.8566”			
RCS-19	068	INSIDE CRANE WALL/AZ200	723’	Z (AXIAL)	557°(553°-560°)		-0.7212”			

Attachment 7
(Page 17 of 18)

INSTRUMENTED THERMAL MONITORING POINTS 557° (553°-560°) TEMPERATURE DATA READINGS

Date _____

ALL OTHER SYSTEM MONITORING POINTS										
MONITOR POINT ID	SYS	LOCATION	ELEV.	DIRECTION	PREDICTED TEMP °F AT PLATEAU	ACTUAL TEMP °F	MAXIMUM PREDICTED MOVEMENT AT 557°F	CALCULATED MOVEMENT AT ACTUAL READING	INITIAL/ DATE	COMMENTS
RCS-20	068	INSIDE CRANE WALL/AZ308	722’	X (LATERAL)*	557°(553°-560°)		-0.9321”			
RCS-21	068	INSIDE CRANE WALL/AZ151	755’	Y (VERTICAL)	557°(553°-560°)		+1.8255”			
RCS-23	068	INSIDE CRANE WALL/AZ151	752'	SZ* (LATERAL)	557°(553°-560°)		+0.2618”			
RCS-24	068	INSIDE CRANE WALL/AZ104	775’	Y (VERTICAL)	557°(553°-560°)		+2.6702			

Attachment 7
(Page 18 of 18)

INSTRUMENTED THERMAL MONITORING POINTS 557° (553°-560°) TEMPERATURE DATA READINGS

Date _____

ALL OTHER SYSTEM MONITORING POINTS										
MONITOR POINT ID	SYS	LOCATION	ELEV.	DIRECTION	PREDICTED TEMP °F AT PLATEAU	ACTUAL TEMP °F	MAXIMUM PREDICTED MOVEMENT AT 557°F	CALCULATED MOVEMENT AT ACTUAL READING	INITIAL/ DATE	COMMENTS
RHR-1	074	INSIDE CRANE WALL/AZ351	707’	SX* (LATERAL)	557°(553°-560°)		+1.4846”			
RHR-2	074	INSIDE CRANE WALL/AZ322	707’	SZ* (AXIAL)	557°(553°-560°)		-0.7466”			
RHR-4	074	INSIDE CRANE WALL/AZ349	719’	Z (LATERAL)	557°(553°-560°)		-1.1988”			
RHR-5	074	V-A11	718	Z (LATERAL)	557°(553°-560°)		-0.7721”			

Attachment 8
(Page 1 of 18)

INSTRUMENTED THERMAL MONITORING POINTS RETURN TO AMBIENT TEMPERATURE (<105°F) DATA READINGS

Date _____

NUCLEAR STEAM SUPPLY SYSTEM LOOP MONITORING POINTS									
MONITOR POINT ID	SYS	LOCATION	DIRECTION	PREDICTED TEMP °F AT PLATEAU	ACTUAL TEMP °F	MAXIMUM PREDICTED MOVEMENT AT 557°F	CALCULATED MOVEMENT AT ACTUAL READING	INITIAL/ DATE	COMMENTS
RC-1	068	TOP S.G. #1	+Y	<105		+2.739”			
RC-2	068	TOP S.G. #2	+Y	<105		+2.739”			
RC-3	068	TOP S.G. #3	+Y	<105		+2.739”			
RC-4	068	TOP S.G. #4	+Y	<105		+2.739”			
RC-5	068	PZR TOP	+Y	<105		+2.68”			
RC-6	068	TOP S.G. #1	-X	<105		-1.794”			
RC-7	068	TOP S.G. #2	+X	<105		+1.794”			
RC-8	068	TOP S.G. #3	+X	<105		+1.794”			
RC-9	068	TOP S.G. #4	-X	<105		-1.794”			
RC-10	068	RCP #1	-X	<105		-1.31”			
RC-11	068	RCP #2	+X	<105		+1.31”			
RC-12	068	RCP #3	+X	<105		+1.31”			
RC-13	068	RCP #4	-X	<105		-1.31”			
RC-14	068	HOT LEG #1	+Z	<105		+0.3”			
RC-15	068	HOT LEG #1	+Y	<105		+0.034”			
RC-16	068	CROSS-OVER LEG #1	+Z	<105		+0.873”			
RC-17	068	CROSS-OVER LEG #1	+Y	<105		-0.677”			
RC-18	068	COLD LEG #1	+Z	<105		+0.866”			

Attachment 8
(Page 2 of 18)

INSTRUMENTED THERMAL MONITORING POINTS RETURN TO AMBIENT TEMPERATURE (<105°F) DATA READINGS

Date _____

NUCLEAR STEAM SUPPLY SYSTEM LOOP MONITORING POINTS									
MONITOR POINT ID	SYS	LOCATION	DIRECTION	PREDICTED TEMP °F AT PLATEAU	ACTUAL TEMP °F	MAXIMUM PREDICTED MOVEMENT AT 557°F	CALCULATED MOVEMENT AT ACTUAL READING	INITIAL/ DATE	COMMENTS
RC-19	068	COLD LEG #1	-Y	<105		-0.023”			
RC-20	068	HOT LEG #2	+Z	<105		+0.3”			
RC-21	068	HOT LEG #2	+Y	<105		+0.034”			
RC-22	068	CROSS-OVER LEG #2	+Z	<105		+0.873”			
RC-23	068	CROSS-OVER LEG #2	+Y	<105		-0.677”			
RC-24	068	COLD LEG #2	+Z	<105		+0.866”			
RC-25	068	COLD LEG #2	-Y	<105		-0.023”			
RC-26	068	HOT LEG #3	-Z	<105		-0.3”			
RC-27	068	HOT LEG #3	+Y	<105		+0.034”			
RC-28	068	CROSS-OVER LEG #3	-Z	<105		-0.873"			
RC-29	068	CROSS-OVER LEG #3	+Y	<105		-0.677”			
RC-30	068	COLD LEG #3	-Z	<105		-0.866”			
RC-31	068	COLD LEG #3	-Y	<105		-0.023”			
RC-32	068	HOT LEG #4	-Z	<105		-0.3”			
RC-33	068	HOT LEG #4	+Y	<105		+0.034”			
RC-34	068	CROSS-OVER LEG #4	-Z	<105		-0.873”			
RC-35	068	CROSS-OVER LEG #4	+Y	<105		-0.667”			

Attachment 8
(Page 3 of 18)

INSTRUMENTED THERMAL MONITORING POINTS RETURN TO AMBIENT TEMPERATURE (<105°F) DATA READINGS

Date _____

NUCLEAR STEAM SUPPLY SYSTEM LOOP MONITORING POINTS									
MONITOR POINT ID	SYS	LOCATION	DIRECTION	PREDICTED TEMP °F AT PLATEAU	ACTUAL TEMP °F	MAXIMUM PREDICTED MOVEMENT AT 557°F	CALCULATED MOVEMENT AT ACTUAL READING	INITIAL/ DATE	COMMENTS
RC-36	068	COLD LEG #4	-Z	<105		-0.866”			
RC-37	068	COLD LEG #4	-Y	<105		-0.023”			
RC-38	068	PZR TOP	+X	<105		+0.18”			

Attachment 8
(Page 4 of 18)

INSTRUMENTED THERMAL MONITORING POINTS RETURN TO AMBIENT TEMPERATURE (<105°F) DATA READINGS

Date _____

ALL OTHER SYSTEM MONITORING POINTS										
MONITOR POINT ID	SYS	LOCATION	ELEV.	DIRECTION	PREDICTED TEMP °F AT PLATEAU	ACTUAL TEMP °F	MAXIMUM PREDICTED MOVEMENT AT 557°F	CALCULATED MOVEMENT AT ACTUAL READING	INITIAL/ DATE	COMMENTS
MS-1	001	INSIDE CRANE WALL/AZ4	761’	Y (VERTICAL)	<105		+1.3716”			
MS-2	001	INSIDE CRANE WALL/AZ4	737’	Z (AXIAL)	<105		+1.8972”			
MS-3	001	INSIDE CRANE WALL/AZ5	733’	X (LATERAL)	<105		+0.8548”			
MS-4	001	INSIDE CRANE WALL/AZ10	733’	Y (VERTICAL)	<105		-0.7987”			
MS-5	001	INSIDE CRANE WALL/AZ175	761’	Y (VERTICAL)	<105		+1.4567”			
MS-6	001	INSIDE CRANE WALL/AZ175	744’	Z (AXIAL)	<105		-1.7413”			
MS-7	001	INSIDE CRANE WALL/AZ169	737’	X (LATERAL)	<105		+0.9885”			
MS-8	001	INSIDE CRANE WALL/AZ169	737’	Y (VERTICAL)	<105		-0.7272”			
MS-9	001	INSIDE CRANE WALL/AZ183	756’	Y (VERTICAL)	<105		+1.5027”			
MS-10	001	INSIDE CRANE WALL/AZ184	738’	Z (AXIAL)	<105		-2.1203”			

Attachment 8
(Page 5 of 18)

INSTRUMENTED THERMAL MONITORING POINTS RETURN TO AMBIENT TEMPERATURE (<105°F) DATA READINGS

Date _____

ALL OTHER SYSTEM MONITORING POINTS										
MONITOR POINT ID	SYS	LOCATION	ELEV.	DIRECTION	PREDICTED TEMP °F AT PLATEAU	ACTUAL TEMP °F	MAXIMUM PREDICTED MOVEMENT AT 557°F	CALCULATED MOVEMENT AT ACTUAL READING	INITIAL/ DATE	COMMENTS
MS-11	001	INSIDE CRANE WALL/AZ169	737’	X (LATERAL)	<105		+1.3459”			
MS-12	001	INSIDE CRANE WALL/AZ171	737’	Y (VERTICAL)	<105		-0.5582”			
MS-13	001	INSIDE CRANE WALL/AZ171	760’	Y (VERTICAL)	<105		+1.4411”			
MS-14	001	INSIDE CRANE WALL/AZ171	737’	Z (AXIAL)	<105		+1.9760”			
MS-15	001	OUTSIDE CRANE WALL/AZ171	737’	X (LATERAL)	<105		+12281”			
MS-16	001	OUTSIDE CRANE WALL/AZ171	737’	Y (VERTICAL)	<105		-0.8978”			
MS-17	001	OUTSIDE CRANE WALL/AZ89	737’	X (LATERAL)	<105		+12.0000”			
MS-18	001	OUTSIDE CRANE WALL/AZ89	737’	X (LATERAL)	<105		+13.0000”			
MS-19	001	K-T15	723’	X (LATERAL)	<105		+8.1300”			
MS-20	001	K-T15	723’	Z (LATERAL)	<105		+7.6000”			
MS-21	001	K-T15	723’	X (LATERAL)	<105		+7.8000”			
MS-22	001	K-T15	723’	Z (LATERAL)	<105		-7.3000”			

Attachment 8
(Page 6 of 18)

INSTRUMENTED THERMAL MONITORING POINTS RETURN TO AMBIENT TEMPERATURE (<105°F) DATA READINGS

Date _____

ALL OTHER SYSTEM MONITORING POINTS										
MONITOR POINT ID	SYS	LOCATION	ELEV.	DIRECTION	PREDICTED TEMP °F AT PLATEAU	ACTUAL TEMP °F	MAXIMUM PREDICTED MOVEMENT AT 557°F	CALCULATED MOVEMENT AT ACTUAL READING	INITIAL/ DATE	COMMENTS
MS-23	001	M-T15	722’	X (LATERAL)	<105		+5.0000”			
MS-24	001	M-T15	722’	Z (AXIAL)	<105		-5.6600”			
MS-25	001	M-T15	723’	X (LATERAL)	<105		+5.0000			
MS-26	001	M-T15	723’	Z (AXIAL)	<105		-5.9100”			
MS-27	001	J-T12	718’	Y (VERTICAL)	<105		-1.5200”			
MS-28	001	J-T12	718’	Z (LATERAL)	<105		+1.0300”			
MS-29	001	J-T10	727’	Z (LATERAL)	<105		+2.0000”			
MS-30	001	J-T10	718’	X (LATERAL)	<105		-2.2500”			
MS-31	001	G-T10	753’	Z-(AXIAL)	<105		-1.3000”			
MS-32	001	G-T10	753’	X (LATERAL)	<105		-1.9000”			

Attachment 8
(Page 7 of 18)

INSTRUMENTED THERMAL MONITORING POINTS RETURN TO AMBIENT TEMPERATURE (<105°F) DATA READINGS

Date _____

ALL OTHER SYSTEM MONITORING POINTS										
MONITOR POINT ID	SYS	LOCATION	ELEV.	DIRECTION	PREDICTED TEMP °F AT PLATEAU	ACTUAL TEMP °F	MAXIMUM PREDICTED MOVEMENT AT 557°F	CALCULATED MOVEMENT AT ACTUAL READING	INITIAL/ DATE	COMMENTS
FW-1	003	AZ21	759’	SX* (AXIAL)	<105		+1.0198”			
FW-2	003	SOUTH VALVE ROOM/U-6	737’	Y (VERTICAL)	<105		-0.4951”			
FW-3	003	SOUTH VALVE ROOM/U-6	737’	Z (LATERAL)	<105		-0.9507”			
FW-4	003	INSIDE CRANE WALL/AZ280	759’	SX* (LATERAL)	<105		+1.0930”			
FW-5	003	INSIDE CRANE WALL/AZ352	754’	Y (VERTICAL)	<105		+0.6810”			
FW-6	003	INSIDE CRANE WALL/AZ352	733’	Z (AXIAL)	<105		+0.8359”			
FW-7	003	INSIDE CRANE WALL/AZ199	759’	SX* (LATERAL)	<105		-1.1612”			
FW-9	003	H-A15	734’	Z (LATERAL)	<105		+0.9589”			
FW-10	003	H-A15	730’	X (LATERAL)	<105		+0.6386”			
FW-11	003	AZ100	759’	SX* (LATERAL)	<105		+0.8975”			
FW-12	003	AZ100	737’	Y (VERTICAL)	<105		-0.6230”			
FW-13	003	AZ170	737’	Z (LATERAL)	<105		+0.8941”			

Attachment 8
(Page 8 of 18)

INSTRUMENTED THERMAL MONITORING POINTS RETURN TO AMBIENT TEMPERATURE (<105°F) DATA READINGS

Date _____

ALL OTHER SYSTEM MONITORING POINTS										
MONITOR POINT ID	SYS	LOCATION	ELEV.	DIRECTION	PREDICTED TEMP °F AT PLATEAU	ACTUAL TEMP °F	MAXIMUM PREDICTED MOVEMENT AT 557°F	CALCULATED MOVEMENT AT ACTUAL READING	INITIAL/ DATE	COMMENTS
FW-14	003	U-A14	752’	X (LATERAL)	<105		+1.3257”			
FW-15	003	U-A14	752’	Y (VERTICAL)	<105		+0.8308”			
FW-17	003	U-A14	748’	Z (LATERAL)	<105		-0.8581”			
FW-20 (LOOP3)	003	CRANE WALL/AZ188	726’	X (AXIAL)	<105		+0.7584”			
FW-21 (LOOP3)	003	CRANE WALL/AZ188	726’	Z (LATERAL)	<105		+1.4141”			
FW-22 (LOOP4)	003	CRANE WALL/AZ352	726’	X (AXIAL)	<105		+0.7539”			
FW-23 (LOOP4)	003	CRANE WALL/AZ352	726’	Z (LATERAL)	<105		-1.4160”			

Attachment 8
(Page 9 of 18)

INSTRUMENTED THERMAL MONITORING POINTS RETURN TO AMBIENT TEMPERATURE (<105°F) DATA READINGS

Date _____

ALL OTHER SYSTEM MONITORING POINTS										
MONITOR POINT ID	SYS	LOCATION	ELEV.	DIRECTION	PREDICTED TEMP °F AT PLATEAU	ACTUAL TEMP °F	MAXIMUM PREDICTED MOVEMENT AT 557°F	CALCULATED MOVEMENT AT ACTUAL READING	INITIAL /DATE	COMMENTS
SGBD-4A	015	INSIDE CRANE WALL/AZ135	728’	SZ* (AXIAL)	<105		+1.5868”			
SGBD-5	015	INSIDE CRANE WALL/AZ175	728’	X (LATERAL)	<105		-0.6584”			
SGBD-6	015	INSIDE CRANE WALL/AZ162	730’	Z (LATERAL)	<105		+1.5736”			
SGBD-9	015	INSIDE CRANE WALL/AZ59	709’	SZ* (AXIAL)	<105		+1.6644”			
SGBD-10	015	INSIDE CRANE WALL/AZ14	709’	SY* (VERTICAL)	<105		-0.8433			
SGBD-11	015	INSIDE CRANE WALL/AZ137	733’	Y (VERTICAL)	<105		+0.3236”			
SGBD-13	015	INSIDE CRANE WALL/AZ185	733’	SY* (VERTICAL)	<105		+0.6081”			
SGBD-14	015	INSIDE CRANE WALL/AZ200	708’	Y (VERTICAL)	<105		-0.6283”			
SGBD-15	015	INSIDE CRANE WALL/AZ126	708’	SX* (LATERAL)	<105		+4.2207”			
SGBD-16	015	INSIDE CRANE WALL/AZ10	708’	Y (VERTICAL)	<105		-1.2471”			

Attachment 8
(Page 10 of 18)

INSTRUMENTED THERMAL MONITORING POINTS RETURN TO AMBIENT TEMPERATURE (<105°F) DATA READINGS

Date _____

ALL OTHER SYSTEM MONITORING POINTS										
MONITOR POINT ID	SYS	LOCATION	ELEV.	DIRECTION	PREDICTED TEMP °F AT PLATEAU	ACTUAL TEMP °F	MAXIMUM PREDICTED MOVEMENT AT 557°F	CALCULATED MOVEMENT AT ACTUAL READING	INITIAL /DATE	COMMENTS
SGBD-17	015	INSIDE CRANE WALL/AZ60	708’	SX* (LATERAL)	<105		+4.0890”			
SGBD-22	015	OUTSIDE CRANE WALL/U-A15	745’	X (LATERAL)	<105		-1.1356”			

Attachment 8
(Page 11 of 18)

INSTRUMENTED THERMAL MONITORING POINTS RETURN TO AMBIENT TEMPERATURE (<105°F) DATA READINGS

Date _____

ALL OTHER SYSTEM MONITORING POINTS										
MONITOR POINT ID	SYS	LOCATION	ELEV.	DIRECTION	PREDICTED TEMP °F AT PLATEAU	ACTUAL TEMP °F	MAXIMUM PREDICTED MOVEMENT AT 557°F	CALCULATED MOVEMENT AT ACTUAL READING	INITIAL/ DATE	COMMENTS
CVCS-2	062	INSIDE CRANE WALL/AZ81	703’	SZ* (LATERAL)	<105		+0.7296”			
CVCS-4	062	INSIDE CRANE WALL/AZ329	712’	SZ* (AXIAL)	<105		+1.3237”			
CVCS-5	062	INSIDE CRANE WALL/AZ125	711’	SZ* (LATERAL)	<105		+2.1542”			
CVCS-6	062	INSIDE CRANE WALL/AZ152	727’	SZ* (AXIAL)	<105		-0.9446”			
CVCS-7	062	INSIDE CRANE WALL/AZ123	718’	SX* (LATERAL)	<105		+0.8210”			
CVCS-8	062	INSIDE CRANE WALL/AZ43	727’	SX* (LATERAL)	<105		+2.6284”			
CVCS-9	062	INSIDE CRANE WALL/AZ43	727’	SZ* (AXIAL)	<105		-1.1833”			
CVCS-10	062	INSIDE CRANE WALL/AZ95	729’	SX* (LATERAL)	<105		+1.4122”			
CVCS-11	062	INSIDE CRANE WALL/AZ128	728’	SX* (LATERAL)	<105		-0.2603”			

Attachment 8
(Page 12 of 18)

INSTRUMENTED THERMAL MONITORING POINTS RETURN TO AMBIENT TEMPERATURE (<105°F) DATA READINGS

Date _____

ALL OTHER SYSTEM MONITORING POINTS										
MONITOR POINT ID	SYS	LOCATION	ELEV.	DIRECTION	PREDICTED TEMP °F AT PLATEAU	ACTUAL TEMP °F	MAXIMUM PREDICTED MOVEMENT AT 557°F	CALCULATED MOVEMENT AT ACTUAL READING	INITIAL/ DATE	COMMENTS
CVCS-12	062	INSIDE CRANE WALL/AZ328	727’	SX* (LATERAL)	<105		+3.592”			
CVCS-13	062	INSIDE CRANE WALL/AZ328	727’	SZ* (AXIAL)	<105		+2.6064”			
CVCS-14	062	INSIDE CRANE WALL/AZ343	727’	SX* (LATERAL)	<105		+2.8029”			
CVCS-15	062	INSIDE CRANE WALL/AZ343	727’	SZ* (AXIAL)	<105		+2.6743”			
CVCS-16	062	INSIDE CRANE WALL/AZ107	730’	Y (VERTICAL)	<105		+1.7592”			
CVCS-17	062	INSIDE CRANE WALL/AZ210	726’	X (LATERAL)	<105		+0.7413”			
CVCS-18	062	INSIDE CRANE WALL/AZ210	727’	SX* (LATERAL)	<105		+2.0678”			
CVCS-20	062	INSIDE CRANE WALL/AZ150	728’	X (LATERAL)	<105		-0.8519”			
CVCS-21	062	INSIDE CRANE WALL/AZ178	728’	Y (VERTICAL)	<105		+0.3711”			

Attachment 8
(Page 13 of 18)

INSTRUMENTED THERMAL MONITORING POINTS RETURN TO AMBIENT TEMPERATURE (<105°F) DATA READINGS

Date _____

ALL OTHER SYSTEM MONITORING POINTS										
MONITOR POINT ID	SYS	LOCATION	ELEV.	DIRECTION	PREDICTED TEMP °F AT PLATEAU	ACTUAL TEMP °F	MAXIMUM PREDICTED MOVEMENT AT 557°F	CALCULATED MOVEMENT AT ACTUAL READING	INITIAL/ DATE	COMMENTS
SIS-1	063	INSIDE CRANE WALL/AZ321	725’	X (AXIAL)	<105		+0.9079”			
SIS-3	063	INSIDE CRANE WALL/AZ40	726’	SX* (LATERAL)	<105		-0.9959”			
SIS-4	063	INSIDE CRANE WALL/AZ42	725’	SX* (LATERAL)	<105		-0.7704”			
SIS-5	063	INSIDE CRANE WALL/AZ32	723’	SZ* (LATERAL)	<105		-0.8162”			
SIS-9	063	INSIDE CRANE WALL/AZ221	728’	Y (VERTICAL)	<105		+0.3523”			
SIS-10	063	INSIDE CRANE WALL/AZ218	723’	SX* (LATERAL)	<105		+0.4912”			
SIS-11	063	INSIDE CRANE WALL/AZ302	722’	SX* (AXIAL)	<105		-1.1416”			
SIS-11A	063	INSIDE CRANE WALL/AZ302	722’	SZ* (LATERAL)	<105		+0.4564”			
SIS-12	063	INSIDE CRANE WALL/AZ300	725’	SZ* (LATERAL)	<105		-0.6812”			
SIS-14	063	INSIDE CRANE WALL/AZ42	729’	SZ* (LATERAL)	<105		+0.9033”			

Attachment 8
(Page 14 of 18)

INSTRUMENTED THERMAL MONITORING POINTS RETURN TO AMBIENT TEMPERATURE (<105°F) DATA READINGS

Date _____

ALL OTHER SYSTEM MONITORING POINTS										
MONITOR POINT ID	SYS	LOCATION	ELEV.	DIRECTION	PREDICTED TEMP °F AT PLATEAU	ACTUAL TEMP °F	MAXIMUM PREDICTED MOVEMENT AT 557°F	CALCULATED MOVEMENT AT ACTUAL READING	INITIAL/ DATE	COMMENTS
SIS-15	063	INSIDE CRANE WALL/AZ225	720’	Z (LATERAL)	<105		+1.2699”			
SIS-16	063	INSIDE CRANE WALL/AZ135	722’	SX* (LATERAL)	<105		+0.6019”			
SIS-17	063	INSIDE CRANE WALL/AZ197	721’	SZ* (AXIAL)	<105		+0.9169”			
SIS-19	063	INSIDE CRANE WALL/AZ188	725’	Y (VERTICAL)	<105		+0.4105”			
SIS-20	063	INSIDE CRANE WALL/AZ37	725’	Z (LATERAL)	<105		-0.7609”			
SIS-21	063	INSIDE CRANE WALL/AZ35	731’	SX* (LATERAL)	<105		+0.4311”			

Attachment 8
(Page 15 of 18)

INSTRUMENTED THERMAL MONITORING POINTS RETURN TO AMBIENT TEMPERATURE (<105°F) DATA READINGS

Date _____

ALL OTHER SYSTEM MONITORING POINTS										
MONITOR POINT ID	SYS	LOCATION	ELEV.	DIRECTION	PREDICTED TEMP °F AT PLATEAU	ACTUAL TEMP °F	MAXIMUM PREDICTED MOVEMENT AT 557°F	CALCULATED MOVEMENT AT ACTUAL READING	INITIAL/ DATE	COMMENTS
RCS-1	068	INSIDE CRANE WALL/AZ109	722’	X (LATERAL)	<105		SURGE LINE			
RCS-2	068	INSIDE CRANE WALL/AZ92	723’	Z (LATERAL)	<105		-2.212”			
RCS-3	068	INSIDE CRANE WALL/AZ104	783’	Y (VERTICAL)	<105		+2.6907”			
RCS-4	068	INSIDE CRANE WALL/AZ34	720’	X (LATERAL)	<105		-1.8008”			
RCS-5	068	INSIDE CRANE WALL/AZ98	733’	SX* (LATERAL)	<105		-0.7884”			
RCS-6	068	INSIDE CRANE WALL/AZ95	720’	Z (AXIAL)	<105		+1.1741”			
RCS-7	068	INSIDE CRANE WALL/AZ104	733’	Y (VERTICAL)	<105		+0.7693”			
RCS-8	068	INSIDE CRANE WALL/AZ92	777’	Y (VERTICAL)	<105		+2.8193”			
RCS-9	068	INSIDE CRANE WALL/AZ90	778’	Y (VERTICAL)	<105		+2.7680”			
RCS-10	068	INSIDE CRANE WALL/AZ135	776’	Y (VERTICAL)	<105		+2.7166”			

Attachment 8
(Page 16 of 18)

INSTRUMENTED THERMAL MONITORING POINTS RETURN TO AMBIENT TEMPERATURE (<105°F) DATA READINGS

Date _____

ALL OTHER SYSTEM MONITORING POINTS										
MONITOR POINT ID	SYS	LOCATION	ELEV.	DIRECTION	PREDICTED TEMP °F AT PLATEAU	ACTUAL TEMP °F	MAXIMUM PREDICTED MOVEMENT AT 557°F	CALCULATED MOVEMENT AT ACTUAL READING	INITIAL/ DATE	COMMENTS
RCS-11	068	INSIDE CRANE WALL/AZ104	761’	Z (AXIAL)	<105		-0.2539”			
RCS-12	068	INSIDE CRANE WALL/AZ87	747’	Y (VERTICAL)	<105		+2.5554”			
RCS-12A	068	INSIDE CRANE WALL/AZ87	747’	SZ* (LATERAL)	<105		+0.3065”			
RCS-13	068	INSIDE CRANE WALL/AZ99	781’	Y (VERTICAL)	<105		+4.6356”			
RCS-14	068	INSIDE CRANE WALL/AZ41	704’	SZ* (LATERAL)	<105		+1.4031”			
RCS-15	068	INSIDE CRANE WALL/AZ141	704’	SZ* (LATERAL)	<105		+1.0580”			
RCS-16	068	INSIDE CRANE WALL/AZ322	704’	SZ* (LATERAL)	<105		-0.7987”			
RCS-17	068	INSIDE CRANE WALL/AZ200	723’	X (LATERAL)	<105		-0.3299”			
RCS-18	068	INSIDE CRANE WALL/AZ300	722’	X (LATERAL)	<105		-0.8566”			
RCS-19	068	INSIDE CRANE WALL/AZ200	723’	Z (AXIAL)	<105		-0.7212”			

Attachment 8
(Page 17 of 18)

INSTRUMENTED THERMAL MONITORING POINTS RETURN TO AMBIENT TEMPERATURE (<105°F) DATA READINGS

Date _____

ALL OTHER SYSTEM MONITORING POINTS										
MONITOR POINT ID	SYS	LOCATION	ELEV.	DIRECTION	PREDICTED TEMP °F AT PLATEAU	ACTUAL TEMP °F	MAXIMUM PREDICTED MOVEMENT AT 557°F	CALCULATED MOVEMENT AT ACTUAL READING	INITIAL/ DATE	COMMENTS
RCS-20	068	INSIDE CRANE WALL/AZ308	722’	X (LATERAL)*	<105		-0.9321”			
RCS-21	068	INSIDE CRANE WALL/AZ151	755’	Y (VERTICAL)	<105		+1.8255”			
RCS-22	068	INSIDE CRANE WALL/AZ151	752’	Y (VERTICAL)	<105		+2.0573”			
RCS-24	068	INSIDE CRANE WALL/AZ104	775’	Y (VERTICAL)	<105		+2.6702			

Attachment 8
(Page 18 of 18)

INSTRUMENTED THERMAL MONITORING POINTS RETURN TO AMBIENT TEMPERATURE (<105°F) DATA READINGS

Date _____

ALL OTHER SYSTEM MONITORING POINTS										
MONITOR POINT ID	SYS	LOCATION	ELEV.	DIRECTION	PREDICTED TEMP °F AT PLATEAU	ACTUAL TEMP °F	MAXIMUM PREDICTED MOVEMENT AT 557°F	CALCULATED MOVEMENT AT ACTUAL READING	INITIAL /DATE	COMMENTS
RHR-1	074	INSIDE CRANE WALL/AZ351	707’	SX* (LATERAL)	<105		+1.4846”			
RHR-2	074	INSIDE CRANE WALL/AZ322	707’	SZ* (AXIAL)	<105		-0.7466”			
RHR-4	074	INSIDE CRANE WALL/AZ349	719’	Z (LATERAL)	<105		-1.1988”			
RHR-5	074	V-A11	718	Z (LATERAL)	<105		-0.7721”			

Attachment 9
(Page 1 of 1)

DATA ACQUISITION SYSTEM COMPUTER DATA SHEET STORAGE

THIS ATTACHMENT WILL BE USED FOR THE COLLECTION OF ALL OF THE DATA ACQUISITION DATA OBTAINED FOR THE INSTRUMENTED POINTS OF THE THERMAL EXPANSION TEST.

Attachment 10
(Page 1 of 72)

PIPE RUPTURE PROTECTIVE DEVICES MAXIMUM PREDICTED THERMAL MOVEMENTS ACCEPTANCE CRITERIA AND DATA READINGS

GAP MEASUREMENTS AT PROTECTIVE DEVICES (PDs)

[1] Gaps need to be measured or monitored in Pipe Rupture Protective Devices (PDs) during Hot Functional Test (HFT). Below is a comprehensive listing of all Pipe Rupture Protective Devices (PDs) within the HFT area of all systems and whether they require measurements or monitoring. PD sketches, with the locations marked for measurements or monitoring are located on the following sheets of this attachment.

[2] Following are the requirements to be used before and during the measuring or monitoring of the Pipe Rupture Protective Devices:

A. Sheet 2 of 72 identifies the pipe rupture mitigation Protection Devices (PDs) which require removal of insulation before hot gap measurements or monitoring during Hot Functional Testing (HFT). This sheet identifies 61 PDs which require removal of insulation for gap measurements, 5 PDs which do **NOT** require removal of insulation for gap movement, and 3 PDs which require observation only.

B. Gap measurements are to be made between the bare pipe and the in-place shim. If a hot gap location does **NOT** have a shim, then the measurement shall be to the surface of the PD structure.

C. Record, on the data sheet, in the “Remarks” column whether the measurement is to the shim or the PD structure.

D. In order to obtain consistent gap measurements, a point shall be scribed on the surface of the pipe and the shim at the closest point between the two. Measurements shall be taken at this location each time.

E. For calcium silicate insulation, a hole large enough for gap measurement may be cut in the insulation in lieu of removing all of the insulation. The hole shall be repaired after the HFT.

F. Gap measurement shall be taken at ambient, maximum and cool-down temperatures. Gaps shall be monitored, for separation, at all other temperature plateaus.

G. Pipe temperature shall be recorded at all measurement and observation plateaus.

Attachment 10
(Page 2 of 72)

PIPE RUPTURE PROTECTIVE DEVICES MAXIMUM PREDICTED THERMAL MOVEMENTS ACCEPTANCE CRITERIA AND DATA READINGS

Date _____

PD NO.	REMARKS
PD00-1	Remove Insulation. Measure Gap
PD00-3	Remove Insulation. Measure Gap
PD00-5	Remove Insulation. Measure Gap
PD00-7	Remove Insulation. Measure Gap
PD00-8	Remove Insulation. Measure Gap
PD00-11	Remove Insulation. Measure Gap
PD00-12	Remove Insulation. Measure Gap
PD00-13	Remove Insulation. Measure Gap
PD00-14	Remove Insulation. Measure Gap
PD00-15	Remove Insulation. Measure Gap
PD00-17	Remove Insulation. Measure Gap
PD00-18	Remove Insulation. Measure Gap
PD00-19	Remove Insulation. Measure Gap
PD00-20	Remove Insulation. Measure Gap
PD00-21	Remove Insulation. Measure Gap
PD00-23	Remove Insulation. Measure Gap
PD00-25	Remove Insulation. Measure Gap
PD00-26	Remove Insulation. Measure Gap
PD00-28	Remove Insulation. Measure Gap
PD00-30	Remove Insulation. Measure Gap
PD00-31	Remove Insulation. Measure Gap
PD00-33	Remove Insulation. Measure Gap
PD00-34	Remove Insulation. Measure Gap
PD00-35	Remove Insulation. Measure Gap
PD00-36	Remove Insulation. Measure Gap
PD00-37	Remove Insulation. Measure Gap
PD00-38	Remove Insulation. Measure Gap
PD00-39	Remove Insulation. Measure Gap
PD00-40	Remove Insulation. Measure Gap
PD00-41	Remove Insulation. Measure Gap
PD01-3	Remove Insulation. Measure Gap
PD01-4	Remove Insulation. Measure Gap
PD01-5	Remove Insulation. Measure Gap
PD01-8	Remove Insulation. Measure Gap
PD01-9	Remove Insulation. Measure Gap
PD01-10	Remove Insulation. Measure Gap
PD01-11	Remove Insulation. Measure Gap

PD NO.	REMARKS
PD01-12	Remove Insulation. Measure Gap
PD01-13	Remove Insulation. Measure Gap
PD01-14	Remove Insulation. Measure Gap
PD01-15	Remove Insulation. Measure Gap
PD03-6	DELETED FOR UNIT 2 ONLY
PD03-7	DELETED FOR UNIT 2 ONLY
PD03-8	DELETED FOR UNIT 2 ONLY
PD03-9	DELETED FOR UNIT 2 ONLY
PD03-11	No Insulation Removal Required. Monitor Only
PD07-1	Remove Insulation. Measure Gap
PD07-2	Remove Insulation. Measure Gap
PD07-4	Remove Insulation. Measure Gap
PD07-5	Remove Insulation. Measure Gap
PD07-10	Remove Insulation. Measure Gap
PD07-11	Remove Insulation. Measure Gap
PD07-13	Remove Insulation. Measure Gap
PD07-14	Remove Insulation. Measure Gap
PD07-31	Remove Insulation. Measure Gap
PD07-35	Remove Insulation. Measure Gap
PD07-38	Remove Insulation. Measure Gap
PD08-1	Remove Insulation. Measure Gap
PD08-2	Remove Insulation. Measure Gap
PD08-3	Remove Insulation. Measure Gap
PD08-8	Remove Insulation. Measure Gap
PD08-9	Remove Insulation. Measure Gap
PD08-10	Remove Insulation. Measure Gap
PD08-11	Remove Insulation. Measure Gap
L12D	No Insulation Removal Required. Measure Gap
L22D	No Insulation Removal Required. Measure Gap
L32D	No Insulation Removal Required. Measure Gap
L42D	No Insulation Removal Required. Measure Gap
M42S	No Insulation Removal Required. Measure Gap

Attachment 10
(Page 3 of 72)

PIPE RUPTURE PROTECTIVE DEVICES MAXIMUM PREDICTED THERMAL MOVEMENTS ACCEPTANCE CRITERIA AND DATA READINGS

Date _____

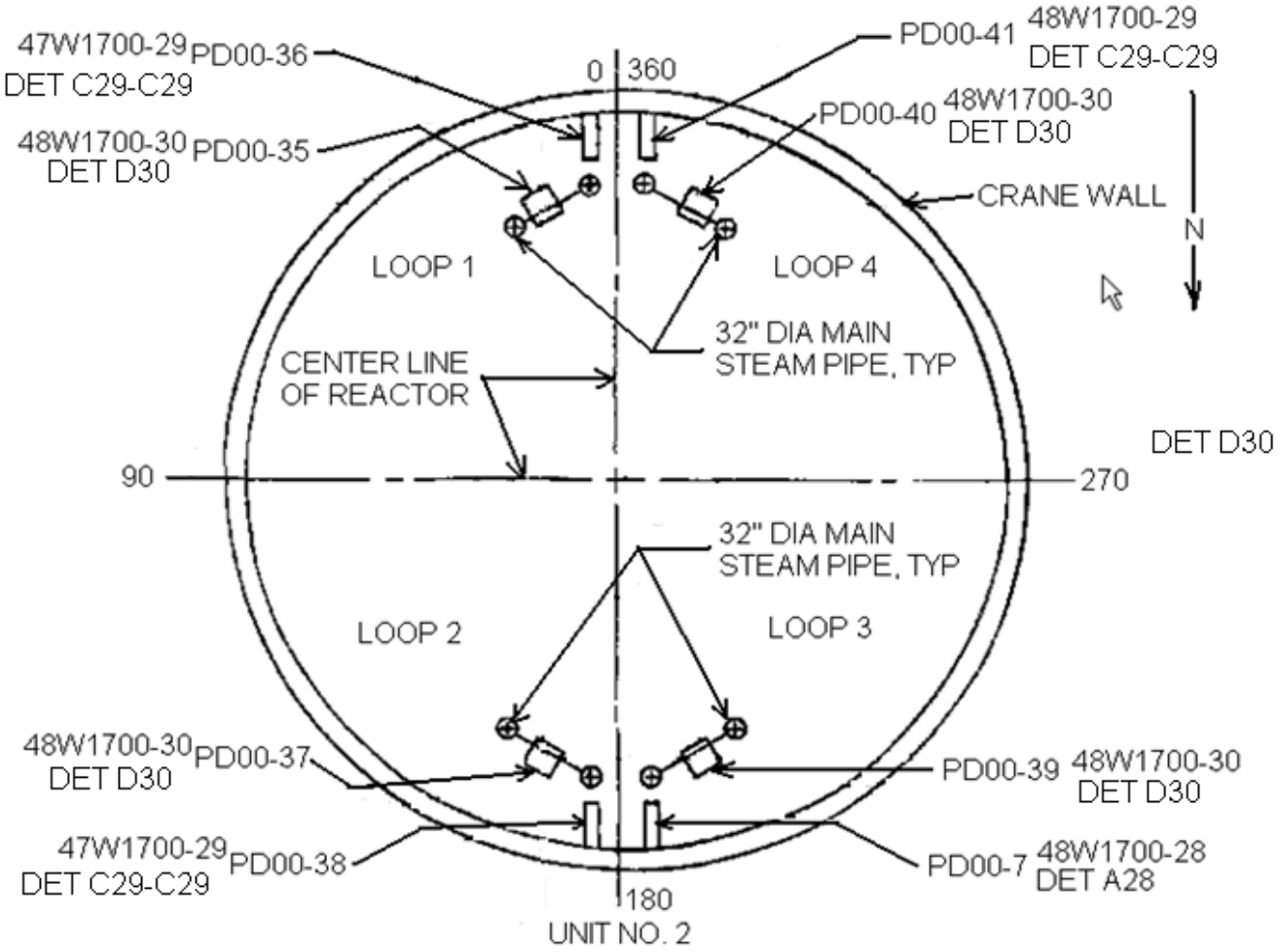

Attachment 10
(Page 4 of 72)

PIPE RUPTURE PROTECTIVE DEVICES MAXIMUM PREDICTED THERMAL MOVEMENTS ACCEPTANCE CRITERIA AND DATA READINGS

Date _____

THE FOLLOWING PIPE RUPTURE PROTECTIVE DEVICES ARE LOCATED ON THE MAIN STEAM LINES LOOP 1

THERMAL EXPANSION TEST RESULTS/PROTECTION DEVICE NUMBER: ___PD00-1___

REF. DWG. NO. ___48W1700-8__ / BLDG. ___I.C.___ / EL. __737__ / COORD. _ AZ 8°__

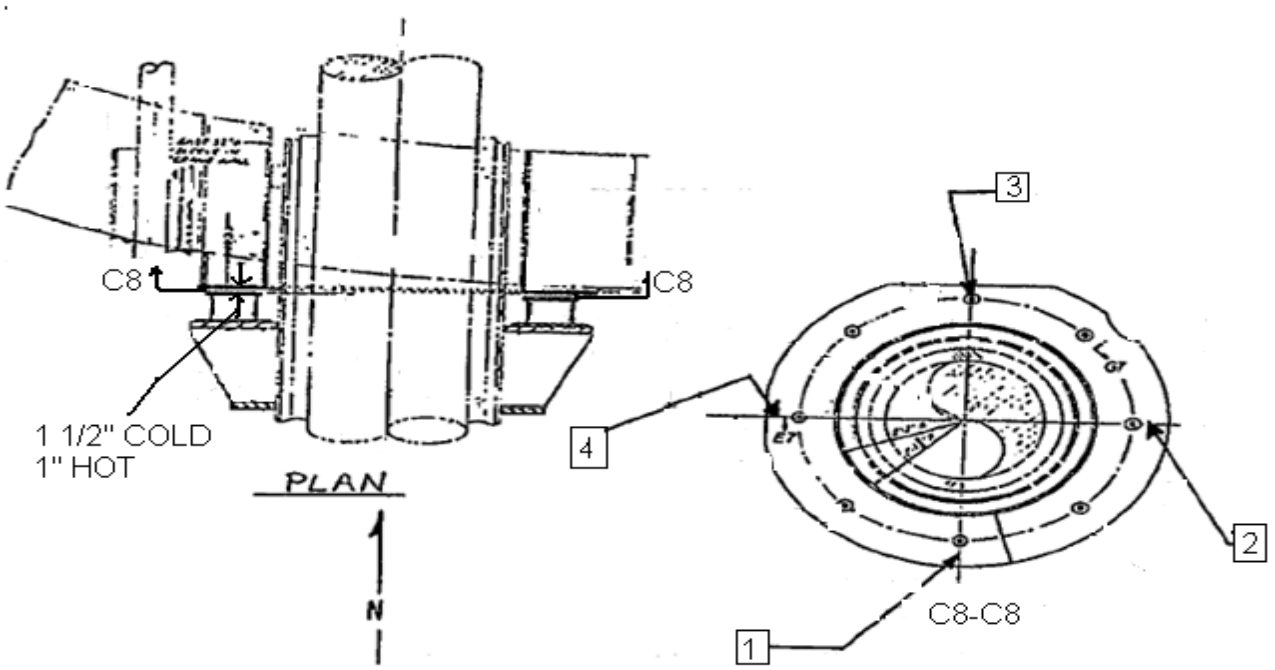

MEASURE POINT	BASE LINE MEASURE AT AMBIENT <105°F	OBSERVED			MEASURED	COOLDOWN FINAL MEASURED <105°F	REMARKS
		250°F (245°-255°)	350°F (345°-355°)	450°F (445°-455°)	557°F (553°-560°)		
LINE TEMP[1]							
INITIAL/ DATE	/	/	/	/	/	/	/

1 FOR INFO ONLY

Attachment 10
(Page 5 of 72)

PIPE RUPTURE PROTECTIVE DEVICES MAXIMUM PREDICTED THERMAL MOVEMENTS ACCEPTANCE CRITERIA AND DATA READINGS

Date _____

THERMAL EXPANSION TEST RESULTS/PROTECTION DEVICE NUMBER: ___PD00-35___

REF. DWG. NO. ___48W1700-30___ / BLDG. ___I.C.__ / EL. ___793___ / COORD. ___AZ 9°__

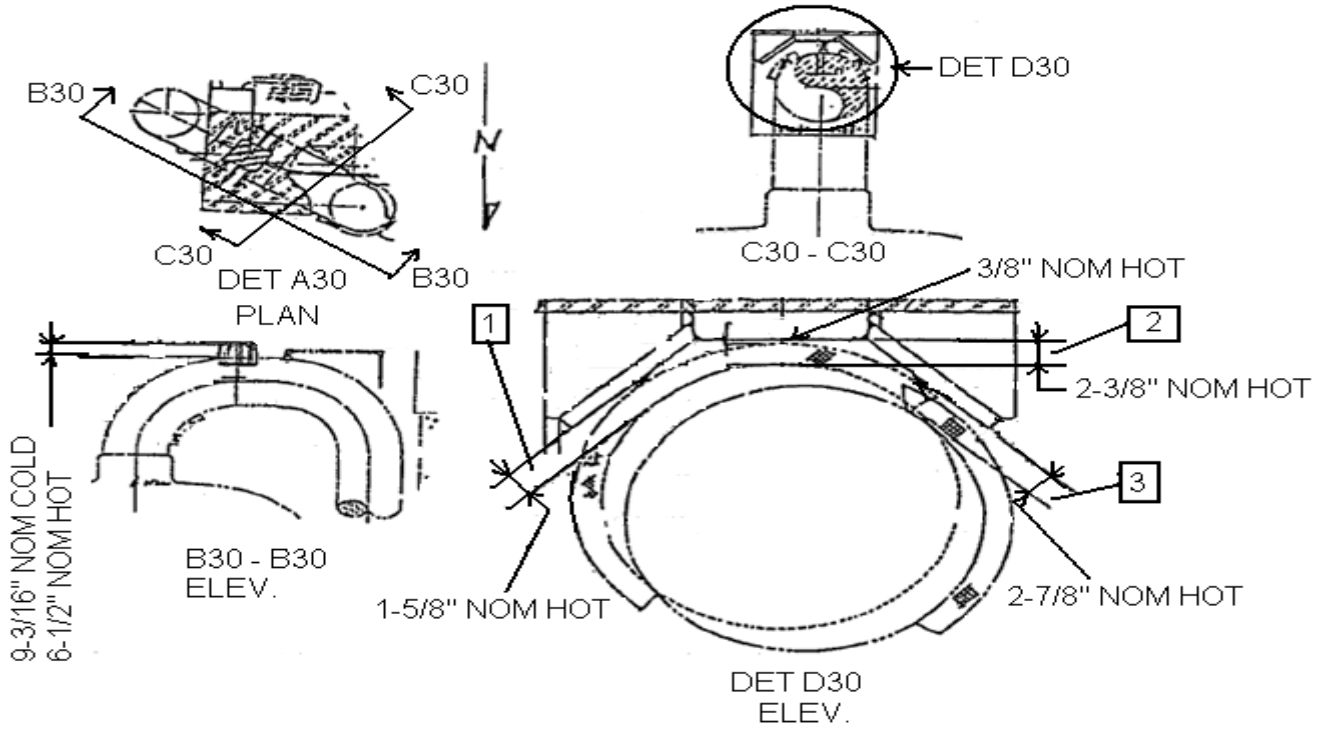

MEASURE POINT	BASE LINE MEASURE AT AMBIENT <105°F	OBSERVED			MEASURED	COOLDOWN FINAL MEASURED <105°F	REMARKS
		250°F (245°-255°)	350°F (345°-355°)	450°F (445°-455°)	557°F (553°-560°)		
LINE TEMP[1]							
INITIAL/ DATE	/	/	/	/	/	/	/

1 FOR INFO ONLY

Attachment 10
(Page 6 of 72)

PIPE RUPTURE PROTECTIVE DEVICES MAXIMUM PREDICTED THERMAL MOVEMENTS ACCEPTANCE CRITERIA AND DATA READINGS

Date _____

THERMAL EXPANSION TEST RESULTS/PROTECTION DEVICE NUMBER: ___PD00-36___

REF. DWG. NO. ___48W1700-29___ / BLDG. ___I.C.___ / EL. ___706___ / COORD. ___AZ 4°___

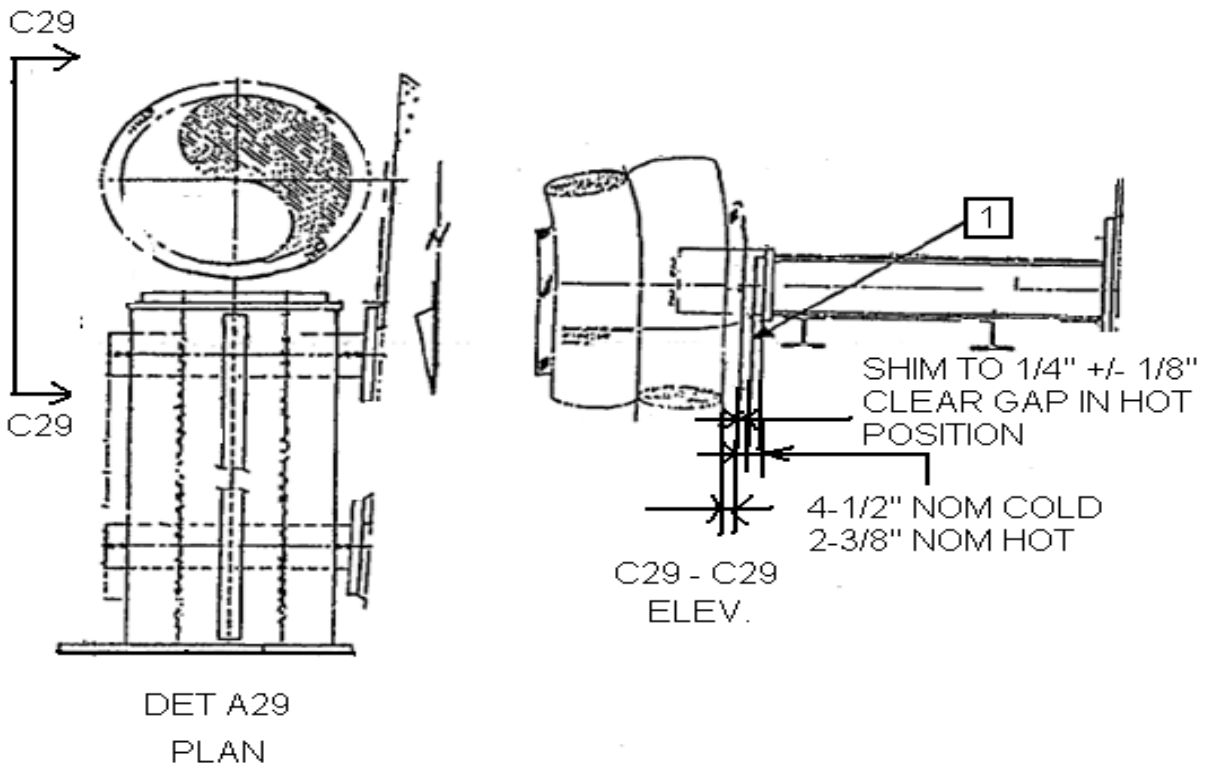

MEASURE POINT	BASE LINE MEASURE AT AMBIENT <105°F	OBSERVED			MEASURED	COOLDOWN FINAL MEASURED <105°F	REMARKS
		250°F (245°-255°)	350°F (345°-355°)	450°F (445°-455°)	557°F (553°-560°)		
LINE TEMP[1]							
INITIAL/ DATE	/	/	/	/	/		/

1 FOR INFO ONLY

Attachment 10
(Page 7 of 72)

PIPE RUPTURE PROTECTIVE DEVICES MAXIMUM PREDICTED THERMAL MOVEMENTS ACCEPTANCE CRITERIA AND DATA READINGS

Date _____

THERMAL EXPANSION TEST RESULTS/PROTECTION DEVICE NUMBER: ___PD07-1___

REF. DWG. NO. ___48W1707-21__ / BLDG. ___SVR___ / EL. ___737__ / COORD. ___COL 15 AND "L" LINE___

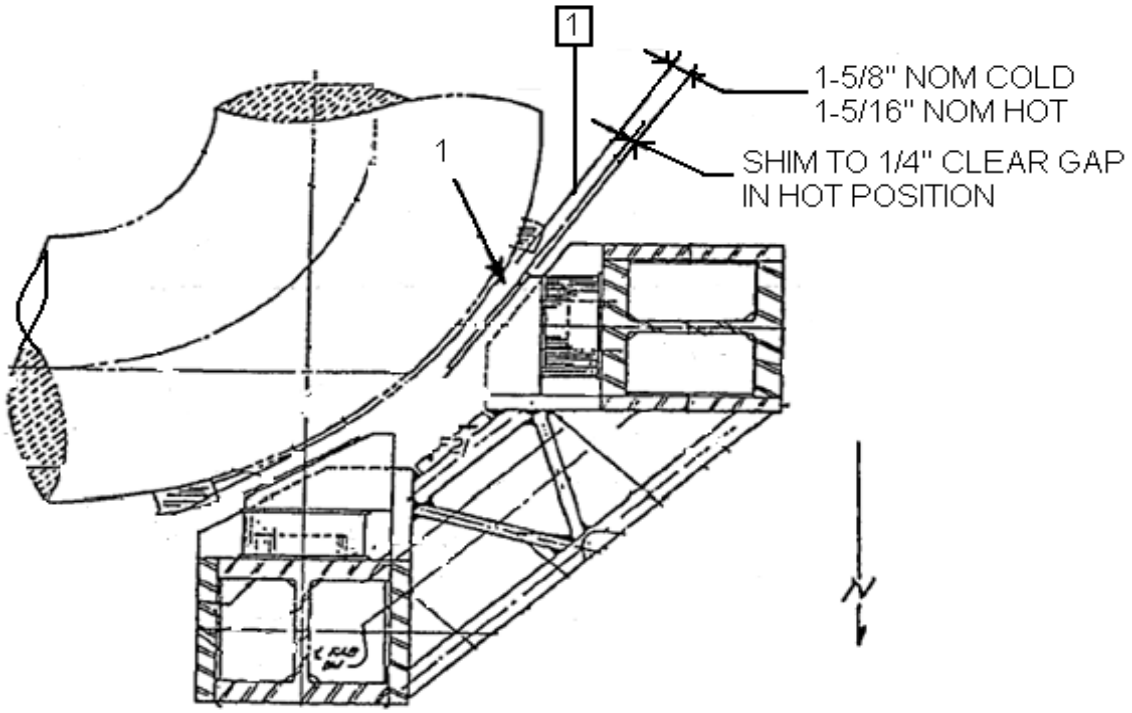

PLAN

MEASURE POINT	BASE LINE MEASURE AT AMBIENT <105°F	OBSERVED			MEASURED	COOLDOWN FINAL MEASURED <105°F	REMARKS
		250°F (245°-255°)	350°F (345°-355°)	450°F (445°-455°)	557°F (553°-560°)		
LINE TEMP[1]							
INITIAL/ DATE	/	/	/	/	/		/

1 FOR INFO ONLY

Attachment 10
(Page 8 of 72)

PIPE RUPTURE PROTECTIVE DEVICES MAXIMUM PREDICTED THERMAL MOVEMENTS ACCEPTANCE CRITERIA AND DATA READINGS

Date _____

THERMAL EXPANSION TEST RESULTS/PROTECTION DEVICE NUMBER: ___PD07-2___

REF. DWG. NO. ___48W1707-21___ / BLDG. ___SVR___ / EL. ___737__ / COORD. ___COL 15 AND "L" LINE___

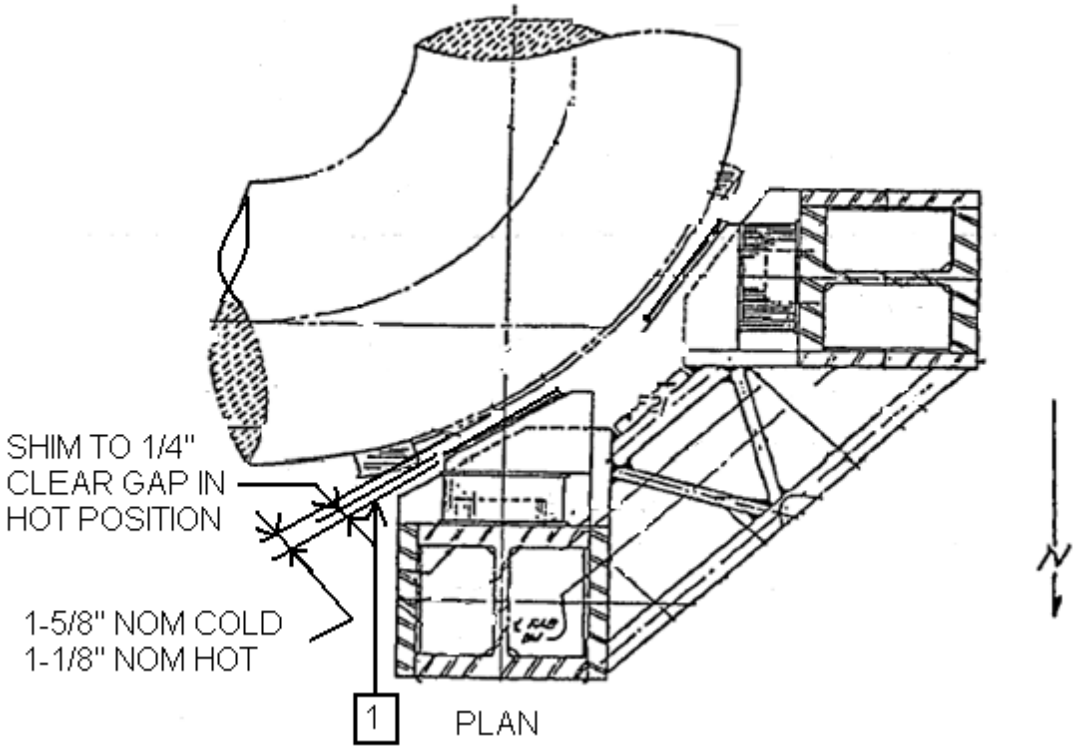

MEASURE POINT	BASE LINE MEASURE AT AMBIENT <105°F	OBSERVED			MEASURED	COOLDOWN FINAL MEASURED <105°F	REMARKS
		250°F (245°-255°)	350°F (345°-355°)	450°F (445°-455°)	557°F (553°-560°)		
LINE TEMP[1]							
INITIAL/ DATE	/	/	/	/	/		/

1 FOR INFO ONLY

Attachment 10
(Page 9 of 72)

PIPE RUPTURE PROTECTIVE DEVICES MAXIMUM PREDICTED THERMAL MOVEMENTS ACCEPTANCE CRITERIA AND DATA READINGS

Date _____

THERMAL EXPANSION TEST RESULTS/PROTECTION DEVICE NUMBER: ___PD07-4___

REF. DWG. NO. ___48W1707-22___ / BLDG. ___SVR__ / EL. ___737__ / COORD. ___COL 7 AND (ABOUT) E LINE___

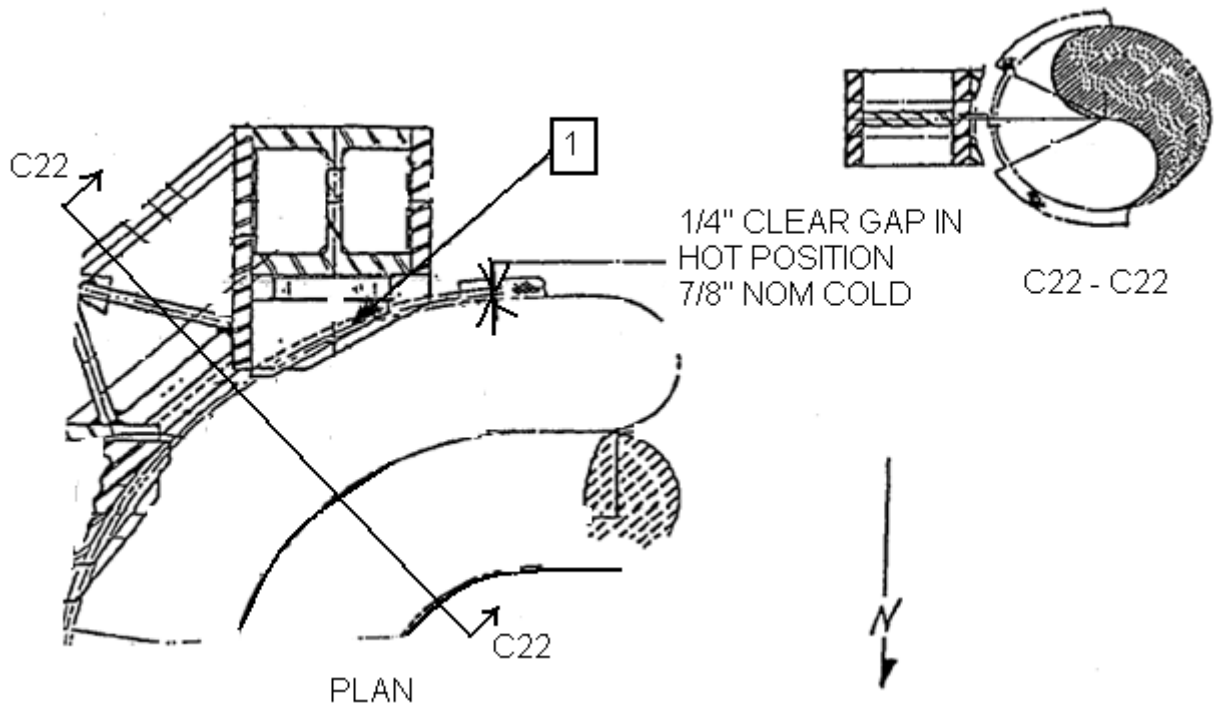

MEASURE POINT	BASE LINE MEASURE AT AMBIENT <105°F	OBSERVED			MEASURED	COOLDOWN FINAL MEASURED <105°F	REMARKS
		250°F (245°-255°)	350°F (345°-355°)	450°F (445°-455°)	557°F (553°-560°)		
LINE TEMP[1]							
INITIAL/ DATE	/	/	/	/	/		/

1 FOR INFO ONLY

Attachment 10
(Page 10 of 72)

PIPE RUPTURE PROTECTIVE DEVICES MAXIMUM PREDICTED THERMAL MOVEMENTS ACCEPTANCE CRITERIA AND DATA READINGS

Date _____

THERMAL EXPANSION TEST RESULTS/PROTECTION DEVICE NUMBER: ___PD07-5___

REF. DWG. NO. ___48W1707-22___ / BLDG. ___SVR___ / EL. ___737__ / COORD. ___COL 7 AND (ABOUT) E LINE___

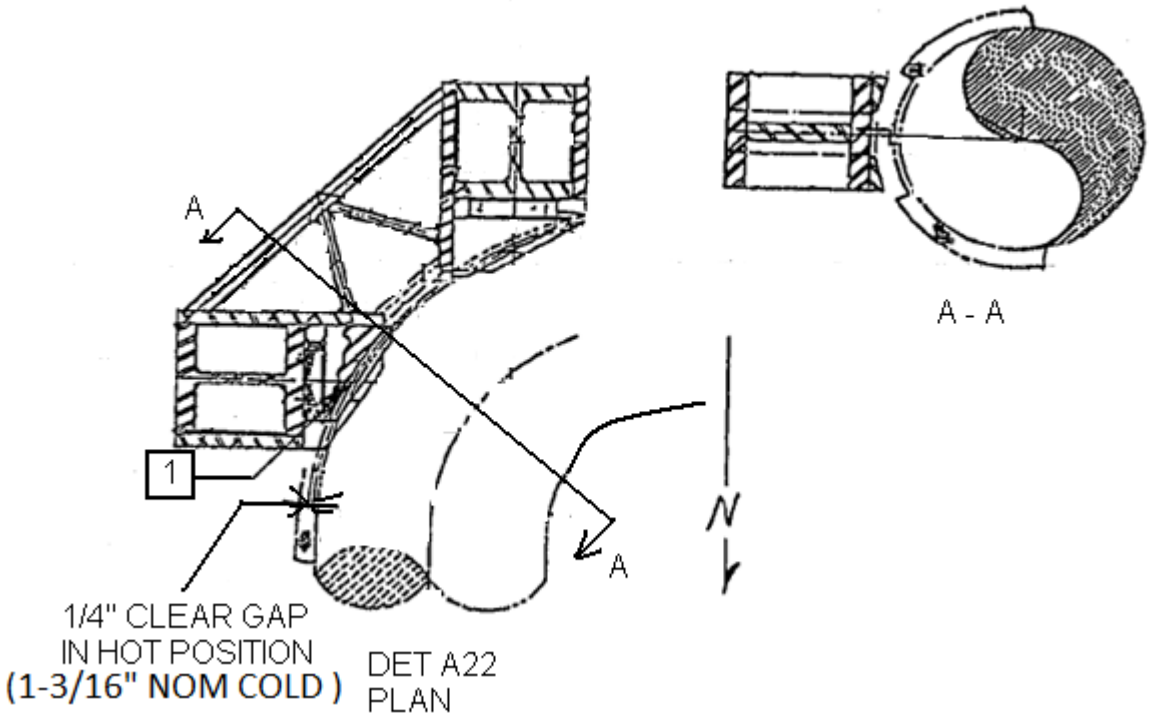

MEASURE POINT	BASE LINE MEASURE AT AMBIENT <105°F	OBSERVED			MEASURED	COOLDOWN FINAL MEASURED <105°F	REMARKS
		250°F (245°-255°)	350°F (345°-355°)	450°F (445°-455°)	557°F (553°-560°)		
LINE TEMP[1]							
INITIAL/ DATE	/	/	/	/	/		/

1 FOR INFO ONLY

Attachment 10
(Page 11 of 72)

PIPE RUPTURE PROTECTIVE DEVICES MAXIMUM PREDICTED THERMAL MOVEMENTS ACCEPTANCE CRITERIA AND DATA READINGS

Date _____

THERMAL EXPANSION TEST RESULTS/PROTECTION DEVICE NUMBER: ___L12D___

REF. DWG. NO. ___48W1352-2___ / BLDG. ___TB___ / EL. ___737'__ / COORD. ___C12 TO C13___

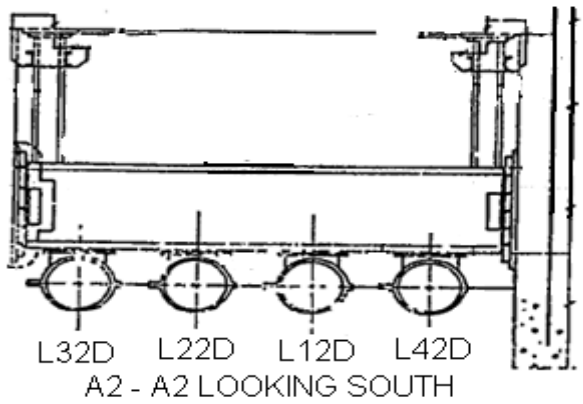

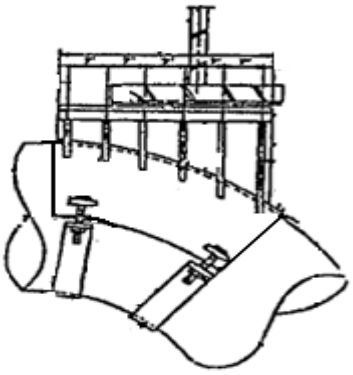

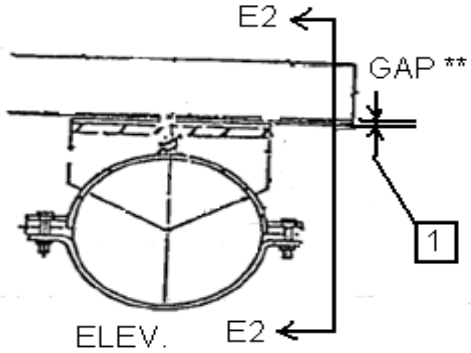

** The Acceptance Criterion for shimming load heads and fluorocarbon plate:

1. Hot Position - A. 1/2" max. at cloest point of interior envelope of load head and plate girder.
   B. 7/8" max. at corner of envelope of the load head and plate girder
2. Cold Position - Minimum cold position gap is 1/16" after pre-operational test is complete.

MEASURE POINT	BASE LINE MEASURE AT AMBIENT <105°F	OBSERVED			MEASURED	COOLDOWN FINAL MEASURED <105°F	REMARKS
		250°F (245°-255°)	350°F (345°-355°)	450°F (445°-455°)	557°F (553°-560°)		
LINE TEMP[1]							
INITIAL/ DATE	/	/	/	/	/		/

1 FOR INFO ONLY

Attachment 10
(Page 12 of 72)

PIPE RUPTURE PROTECTIVE DEVICES MAXIMUM PREDICTED THERMAL MOVEMENTS ACCEPTANCE CRITERIA AND DATA READINGS

Date _____

THE FOLLOWING PIPE RUPTURE PROTECTIVE DEVICES ARE LOCATED ON THE MAIN STEAM LINES LOOP 2

THERMAL EXPANSION TEST RESULTS/PROTECTION DEVICE NUMBER: ___PD00-3___

REF. DWG. NO. __48W1700-8___ / BLDG. ___I.C.__ / EL. ___737__ / COORD. ___AZ 125°__

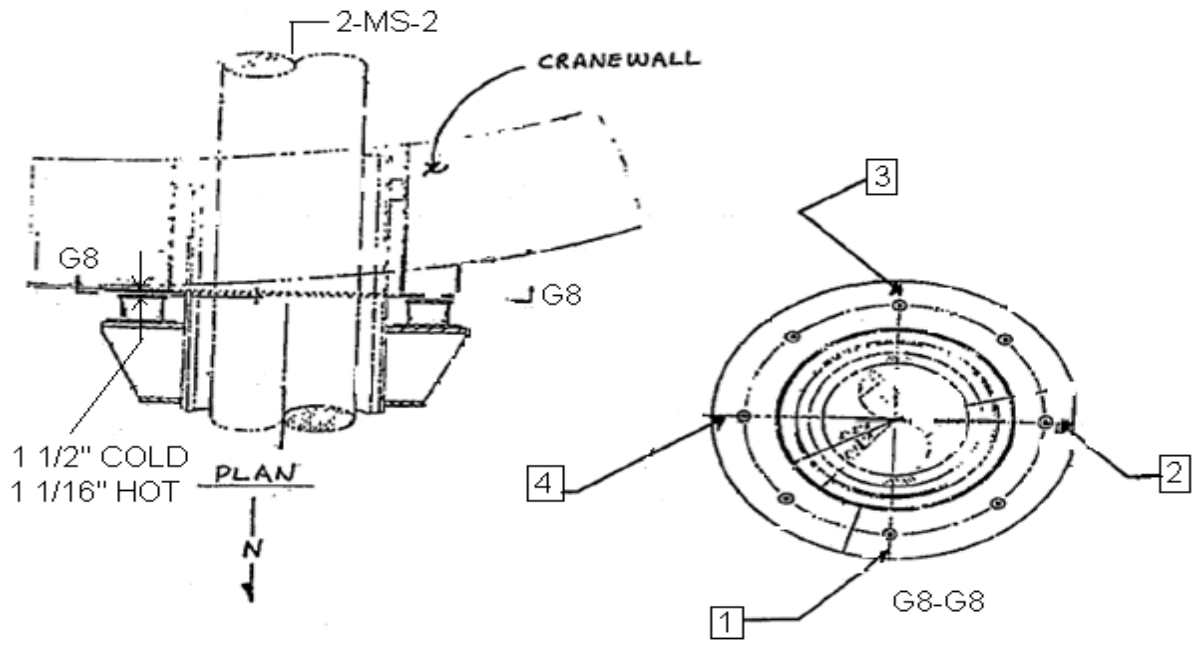

MEASURE POINT	BASE LINE MEASURE AT AMBIENT <105°F	OBSERVED			MEASURED	COOLDOWN FINAL MEASURED <105°F	REMARKS
		250°F (245°-255°)	350°F (345°-355°)	450°F (445°-455°)	557°F (553°-560°)		
LINE TEMP[1]							
INITIAL/ DATE	/	/	/	/	/		/

1 FOR INFO ONLY

Attachment 10
(Page 13 of 72)

PIPE RUPTURE PROTECTIVE DEVICES MAXIMUM PREDICTED THERMAL MOVEMENTS ACCEPTANCE CRITERIA AND DATA READINGS

Date _____

THERMAL EXPANSION TEST RESULTS/PROTECTION DEVICE NUMBER: ___PD00-37___

REF. DWG. NO. ___48W1700-30___ / BLDG. ___I.C.___ / EL. ___793___ / COORD. ___AZ 171°___

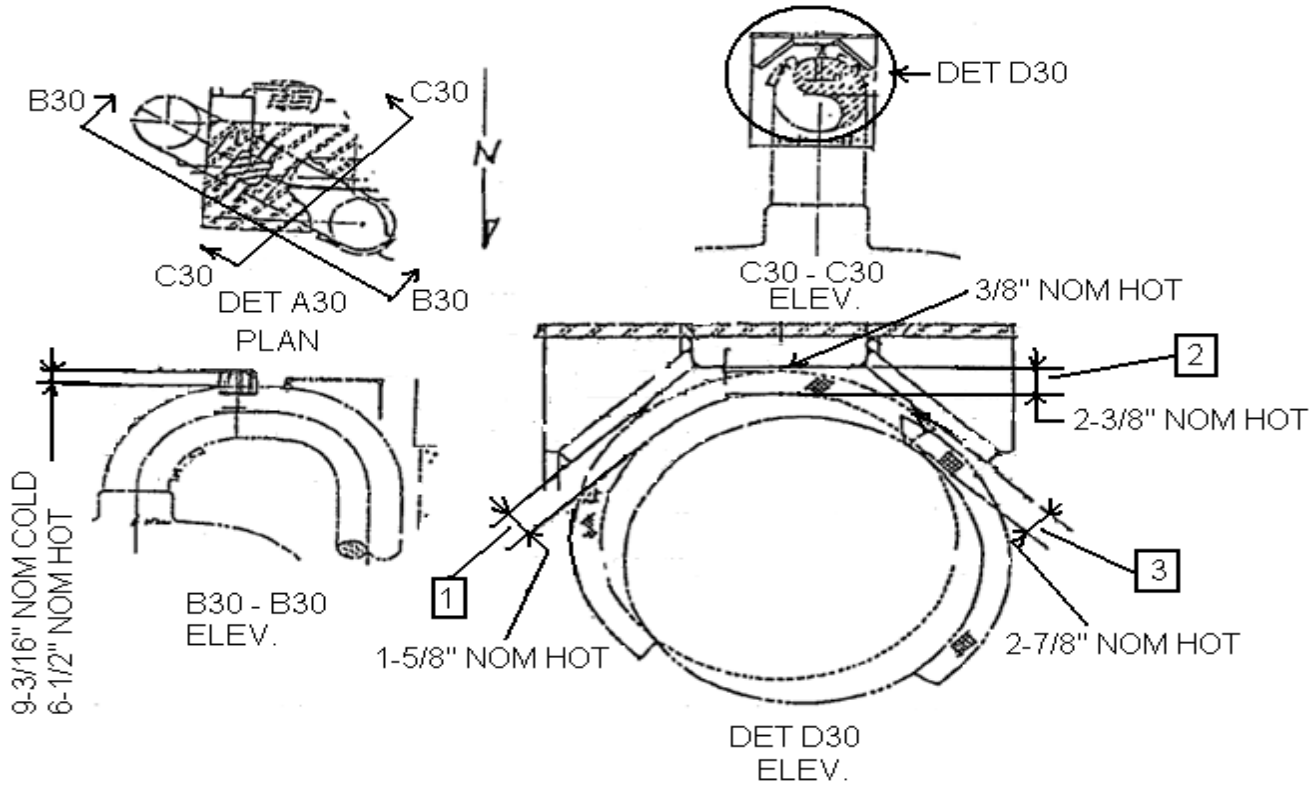

MEASURE POINT	BASE LINE MEASURE AT AMBIENT <105°F	OBSERVED			MEASURED	COOLDOWN FINAL MEASURED <105°F	REMARKS
		250°F (245°-255°)	350°F (345°-355°)	450°F (445°-455°)	557°F (553°-560°)		
LINE TEMP[1]							
INITIAL/ DATE	/	/	/	/	/		/

1 FOR INFO ONLY

Attachment 10
(Page 14 of 72)

PIPE RUPTURE PROTECTIVE DEVICES MAXIMUM PREDICTED THERMAL MOVEMENTS ACCEPTANCE CRITERIA AND DATA READINGS

Date _____

THERMAL EXPANSION TEST RESULTS/PROTECTION DEVICE NUMBER: ___PD00-38___

REF. DWG. NO. ___48W1700-29___ / BLDG. ___I.C.___ / EL. ___786___ / COORD. ___AZ 171°___

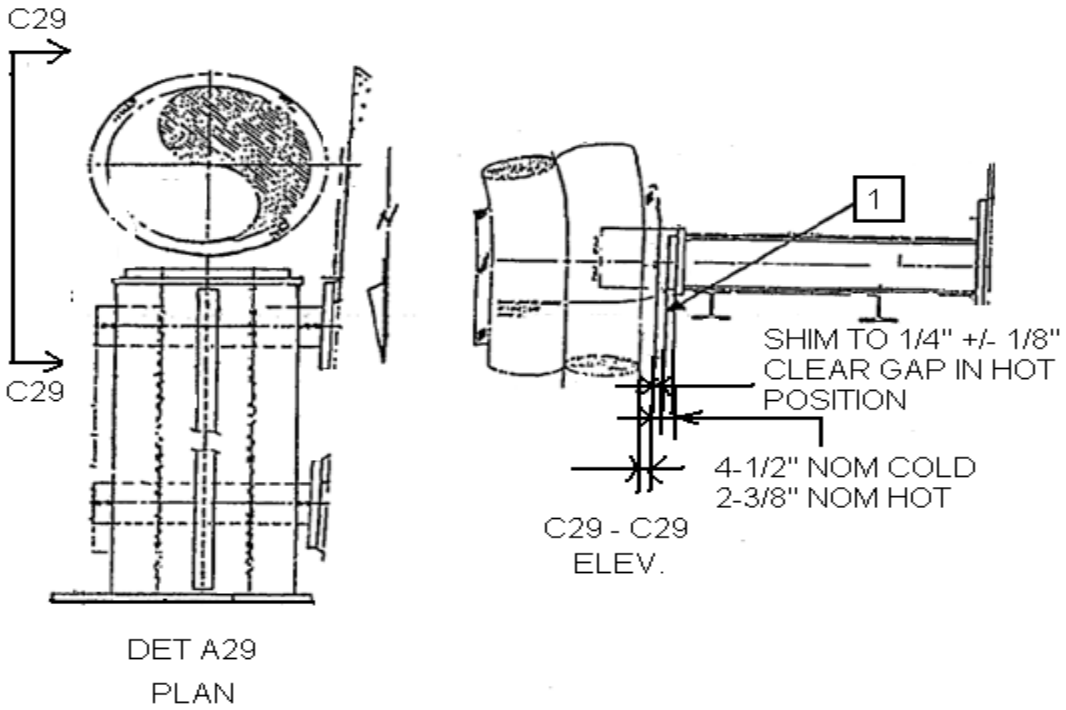

MEASURE POINT	BASE LINE MEASURE AT AMBIENT <105°F	OBSERVED			MEASURED	COOLDOWN FINAL MEASURED <105°F	REMARKS
		250°F (245°-255°)	350°F (345°-355°)	450°F (445°-455°)	557°F (553°-560°)		
LINE TEMP[1]							
INITIAL/ DATE	/	/	/	/	/		/

1 FOR INFO ONLY

Attachment 10
(Page 15 of 72)

PIPE RUPTURE PROTECTIVE DEVICES MAXIMUM PREDICTED THERMAL MOVEMENTS ACCEPTANCE CRITERIA AND DATA READINGS

Date _____

THERMAL EXPANSION TEST RESULTS/PROTECTION DEVICE NUMBER: ___PD08-1___

REF. DWG. NO. ___48W1708-8___ / BLDG. ___NVR___ / EL. ___737__ / COORD. ___COL C-D NVR (ROOM)___

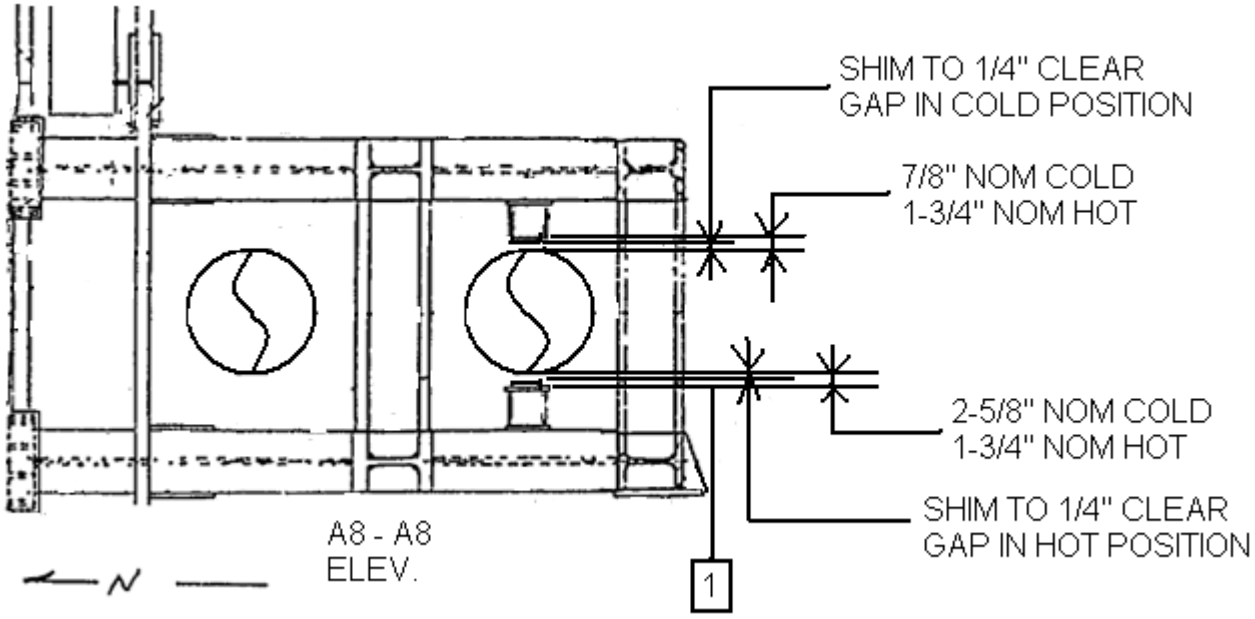

MEASURE POINT	BASE LINE MEASURE AT AMBIENT	OBSERVED			MEASURED	COOLDOWN FINAL MEASURED	REMARKS
		250°F	350°F	450°F	557°F		
LINE TEMP[1]							
INITIAL/DATE	/	/	/	/	/	/	/

1 FOR INFO ONLY

Attachment 10
(Page 16 of 72)

PIPE RUPTURE PROTECTIVE DEVICES MAXIMUM PREDICTED THERMAL MOVEMENTS ACCEPTANCE CRITERIA AND DATA READINGS

Date _____

THERMAL EXPANSION TEST RESULTS/PROTECTION DEVICE NUMBER: ___PD08-2___

REF. DWG. NO. ___48W1708-12___ / BLDG. ___NVR___ / EL. ___737'__ / COORD. ___COL 6 AND F___

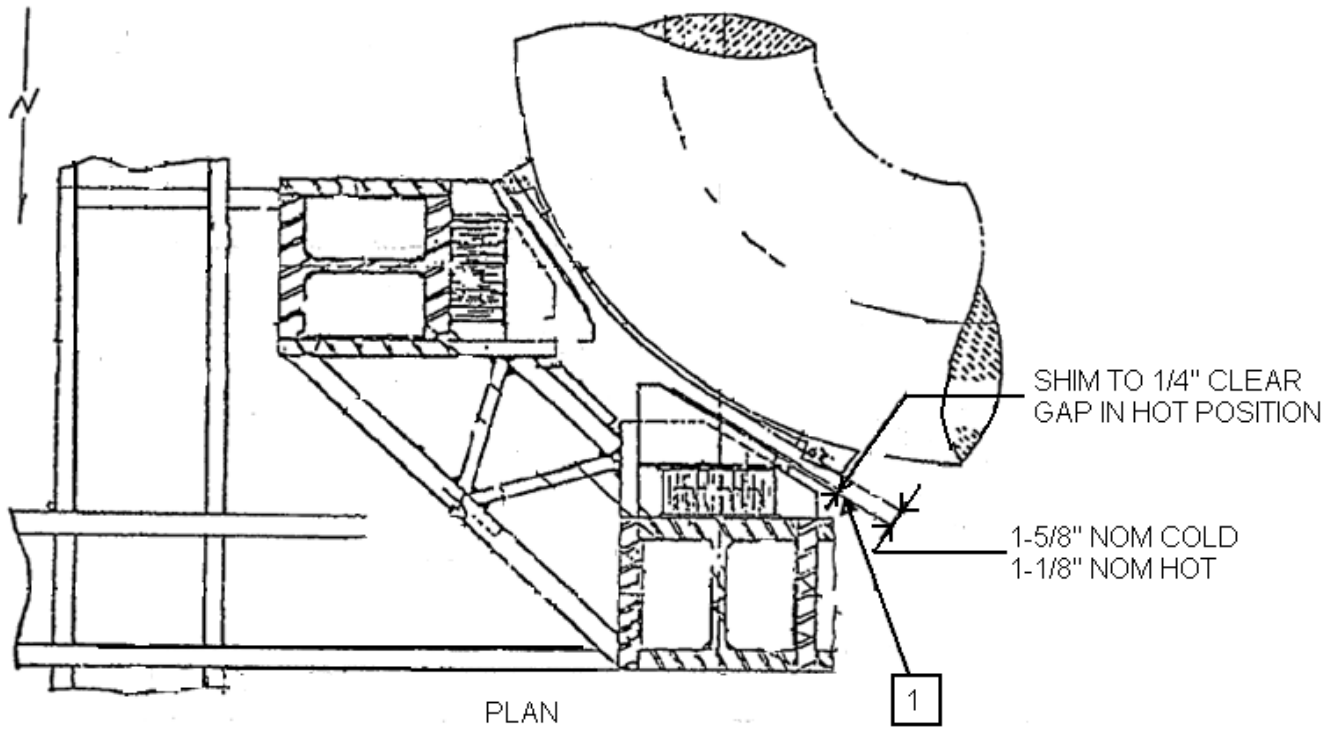

MEASURE POINT	BASE LINE MEASURE AT AMBIENT <105°F	OBSERVED			MEASURED	COOLDOWN FINAL MEASURED <105°F	REMARKS
		250°F (245°-255°)	350°F (345°-355°)	450°F (445°-455°)	557°F (553°-560°)		
LINE TEMP[1]							
INITIAL/ DATE	/	/	/	/	/		/

1 FOR INFO ONLY

Attachment 10
(Page 17 of 72)

PIPE RUPTURE PROTECTIVE DEVICES MAXIMUM PREDICTED THERMAL MOVEMENTS ACCEPTANCE CRITERIA AND DATA READINGS

Date _____

THERMAL EXPANSION TEST RESULTS/PROTECTION DEVICE NUMBER: ___PD08-3___

REF. DWG. NO. ___48W1708-12___ / BLDG. ___NVR___ / EL. ___737'__ / COORD. ___COL 6 AND F_ __

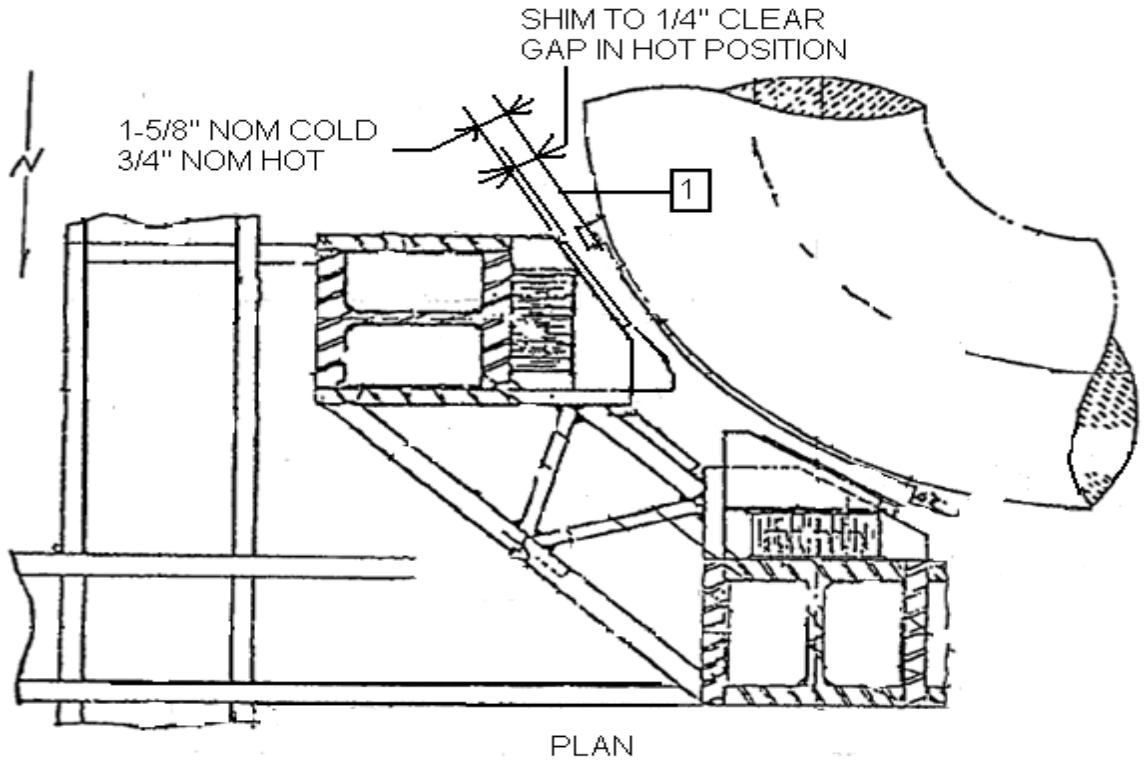

MEASURE POINT	BASE LINE MEASURE AT AMBIENT <105°F	OBSERVED			MEASURED	COOLDOWN FINAL MEASURED <105°F	REMARKS
		250°F (245°-255°)	350°F (345°-355°)	450°F (445°-455°)	557°F (553°-560°)		
LINE TEMP[1]							
INITIAL/ DATE	/	/	/	/	/		/

1 FOR INFO ONLY

Attachment 10
(Page 18 of 72)

PIPE RUPTURE PROTECTIVE DEVICES MAXIMUM PREDICTED THERMAL MOVEMENTS ACCEPTANCE CRITERIA AND DATA READINGS

Date _____

THERMAL EXPANSION TEST RESULTS/PROTECTION DEVICE NUMBER: ___L22D___

REF. DWG. NO. ___48W1352-2___ / BLDG. ___TB___ / EL. ___737'__ / COORD. ___C12 TO C13___

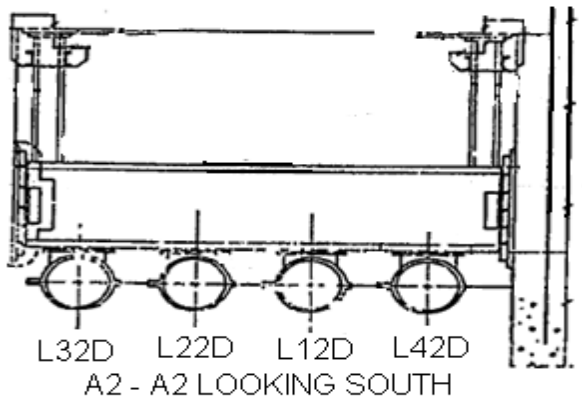

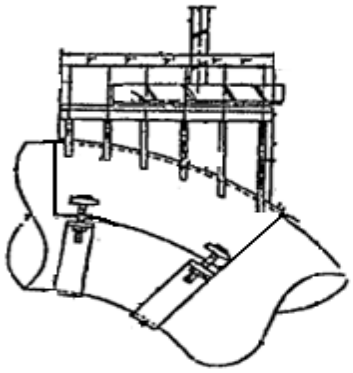

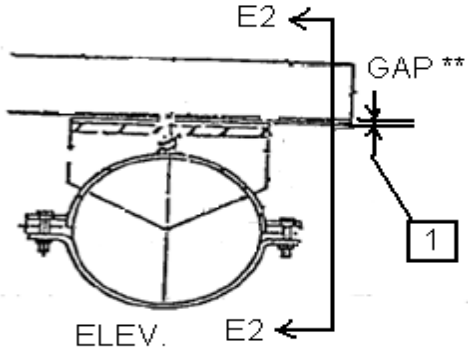

** The Acceptance Criterion for shimming load heads and fluorocarbon plate:

1. Hot Position - A. 1/2" max. at cloest point of interior envelope of load head and plate girder.
   B. 7/8" max. at corner of envelope of the load head and plate girder
2. Cold Position - Minimum cold position gap is 1/16" after pre-operational test is complete.

MEASURE POINT	BASE LINE MEASURE AT AMBIENT <105°F	OBSERVED			MEASURED	COOLDOWN FINAL MEASURED <105°F	REMARKS
		250°F (245°-255°)	350°F (345°-355°)	450°F (445°-455°)	557°F (553°-560°)		
LINE TEMP[1]							
INITIAL/ DATE	/	/	/	/	/		/

1 FOR INFO ONLY

Attachment 10
(Page 19 of 72)

PIPE RUPTURE PROTECTIVE DEVICES MAXIMUM PREDICTED THERMAL MOVEMENTS ACCEPTANCE CRITERIA AND DATA READINGS

Date _____

THE FOLLOWING PIPE RUPTURE PROTECTIVE DEVICES ARE LOCATED ON THE MAIN STEAM LINES LOOP 3

THERMAL EXPANSION TEST RESULTS/PROTECTION DEVICE NUMBER: ___PD00-5___

REF. DWG. NO. ___48W1700-8___ / BLDG. ___I.C.___ / EL. ___736___ / COORD. ___AZ 180°___

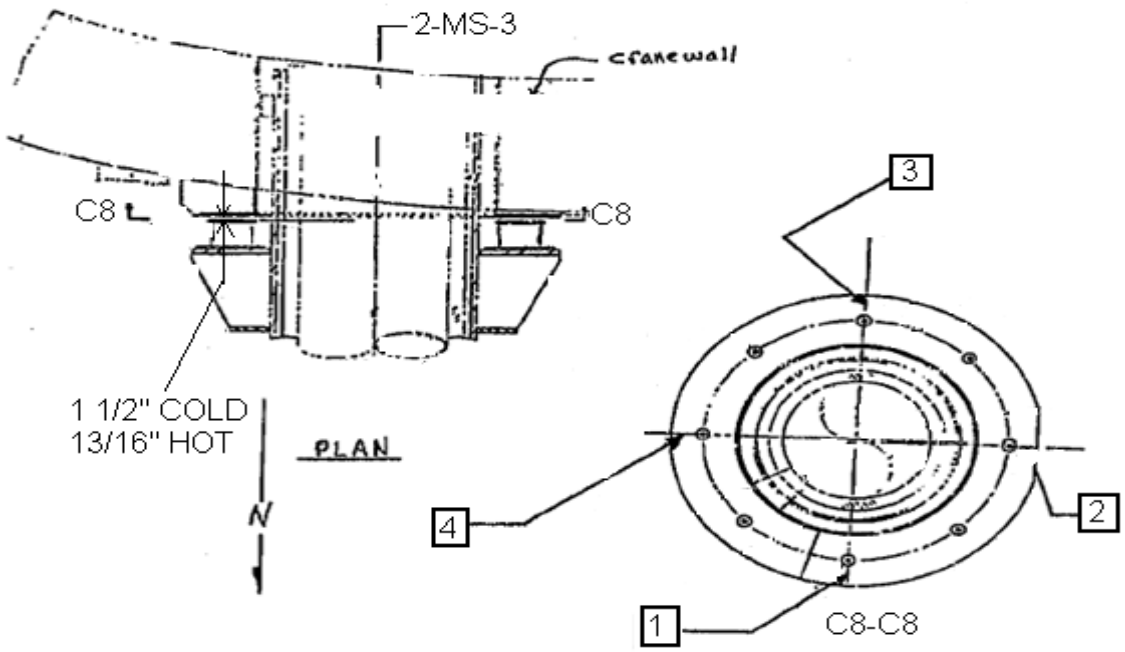

MEASURE POINT	BASE LINE MEASURE AT AMBIENT <105°F	OBSERVED			MEASURED	COOLDOWN FINAL MEASURED <105°F	REMARKS
		250°F (245°-255°)	350°F (345°-355°)	450°F (445°-455°)	557°F (553°-560°)		
LINE TEMP[1]							
INITIAL/ DATE	/	/	/	/	/		/

1 FOR INFO ONLY

Attachment 10
(Page 20 of 72)

PIPE RUPTURE PROTECTIVE DEVICES MAXIMUM PREDICTED THERMAL MOVEMENTS ACCEPTANCE CRITERIA AND DATA READINGS

Date _____

THERMAL EXPANSION TEST RESULTS/PROTECTION DEVICE NUMBER: ___PD00-7___

REF. DWG. NO. ___48W1700-28___ / BLDG. ___I.C.___ / EL. ___786___ / COORD. ___AZ 185°__

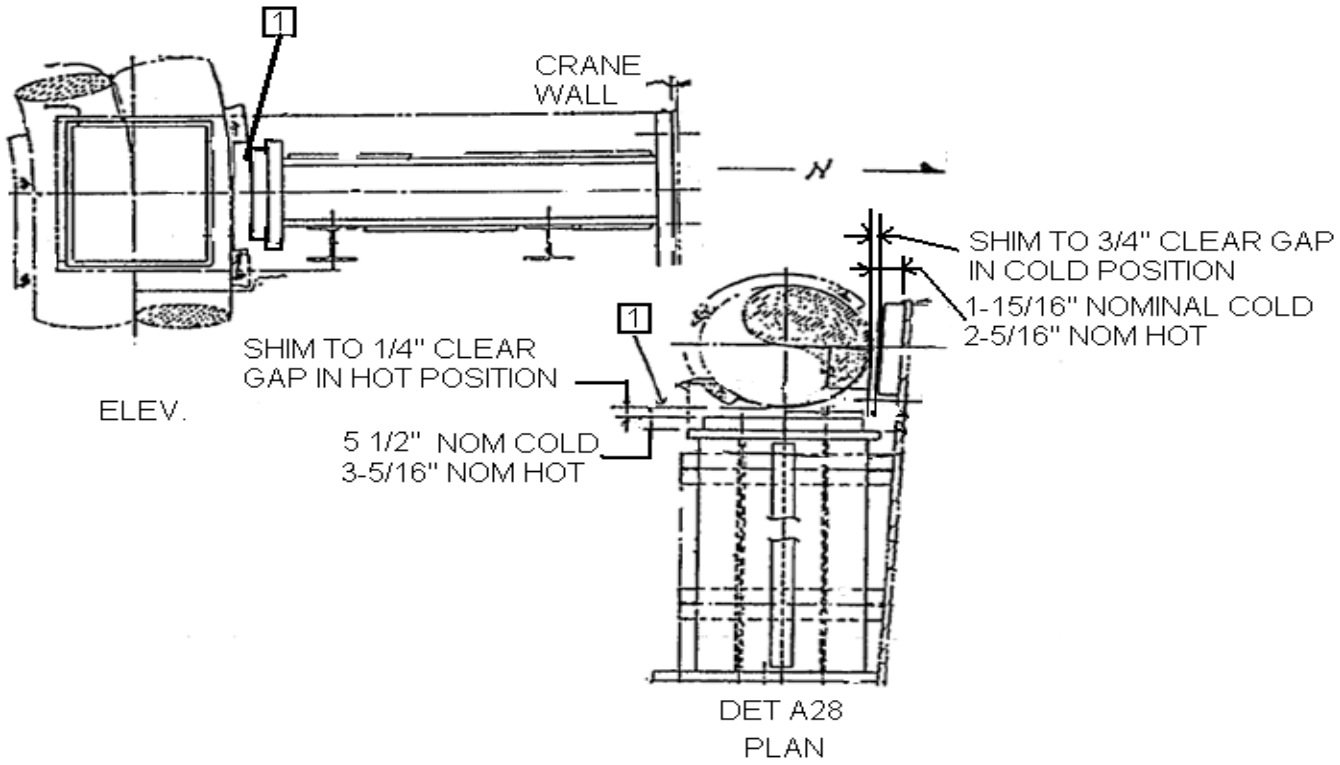

MEASURE POINT	BASE LINE MEASURE AT AMBIENT <105°F	OBSERVED			MEASURED	COOLDOWN FINAL MEASURED <105°F	REMARKS
		250°F (245°-255°)	350°F (345°-355°)	450°F (445°-455°)	557°F (553°-560°)		
LINE TEMP[1]							
INITIAL/ DATE	/	/	/	/	/		/

1 FOR INFO ONLY

Attachment 10
(Page 21 of 72)

PIPE RUPTURE PROTECTIVE DEVICES MAXIMUM PREDICTED THERMAL MOVEMENTS ACCEPTANCE CRITERIA AND DATA READINGS

Date _____

THERMAL EXPANSION TEST RESULTS/PROTECTION DEVICE NUMBER: ___PD00-39___

REF. DWG. NO. ___48W1700-30___ / BLDG. ___I.C.___ / EL. ___793___ / COORD. ___AZ 189°__

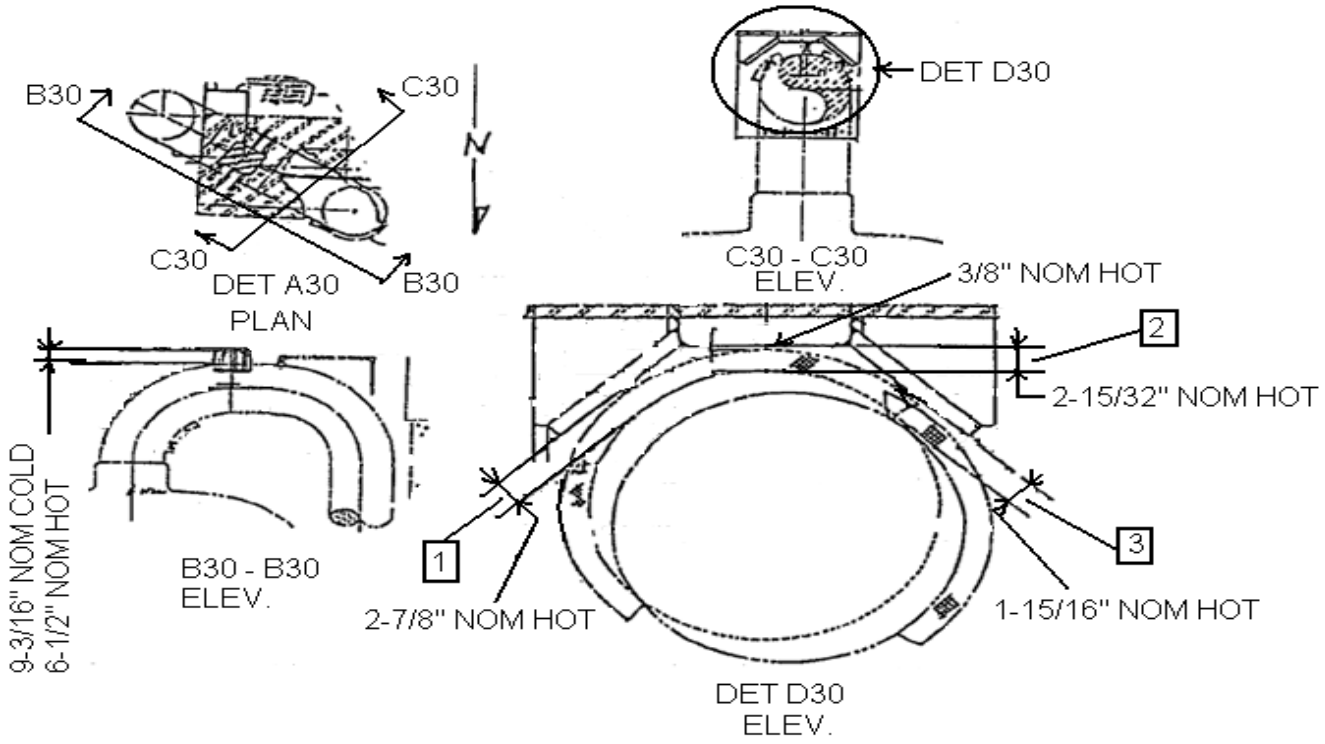

MEASURE POINT	BASE LINE MEASURE AT AMBIENT <105°F	OBSERVED			MEASURED	COOLDOWN FINAL MEASURED <105°F	REMARKS
		250°F (245°-255°)	350°F (345°-355°)	450°F (445°-455°)	557°F (553°-560°)		
LINE TEMP[1]							
INITIAL/ DATE	/	/	/	/	/		/

1 FOR INFO ONLY

Attachment 10
(Page 22 of 72)

PIPE RUPTURE PROTECTIVE DEVICES MAXIMUM PREDICTED THERMAL MOVEMENTS ACCEPTANCE CRITERIA AND DATA READINGS

Date _____

THERMAL EXPANSION TEST RESULTS/PROTECTION DEVICE NUMBER: ___PD08-8___

REF. DWG. NO. ___48W1708-12___ / BLDG. ___NVR___ / EL. ___737'___ / COORD. ___COL G AND 2___

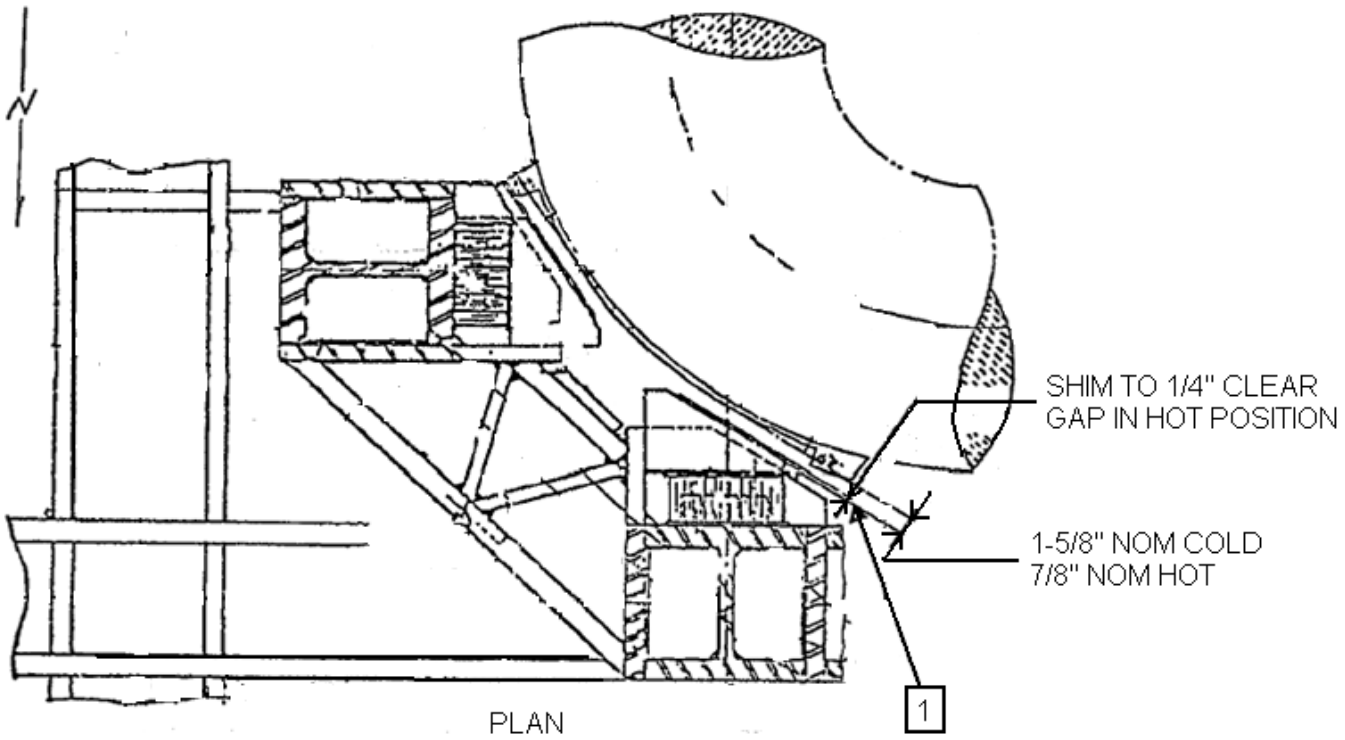

MEASURE POINT	BASE LINE MEASURE AT AMBIENT <105°F	OBSERVED			MEASURED	COOLDOWN FINAL MEASURED <105°F	REMARKS
		250°F (245°-255°)	350°F (345°-355°)	450°F (445°-455°)	557°F (553°-560°)		
LINE TEMP[1]							
INITIAL/ DATE	/	/	/	/	/		/

1 FOR INFO ONLY

Attachment 10
(Page 23 of 72)

PIPE RUPTURE PROTECTIVE DEVICES MAXIMUM PREDICTED THERMAL MOVEMENTS ACCEPTANCE CRITERIA AND DATA READINGS

Date _____

THERMAL EXPANSION TEST RESULTS/PROTECTION DEVICE NUMBER: ___PD08-9___

REF. DWG. NO. ___48W1708-12___ / BLDG. ___NVR___ / EL. ___737'__ / COORD. ___COL G AND 2___

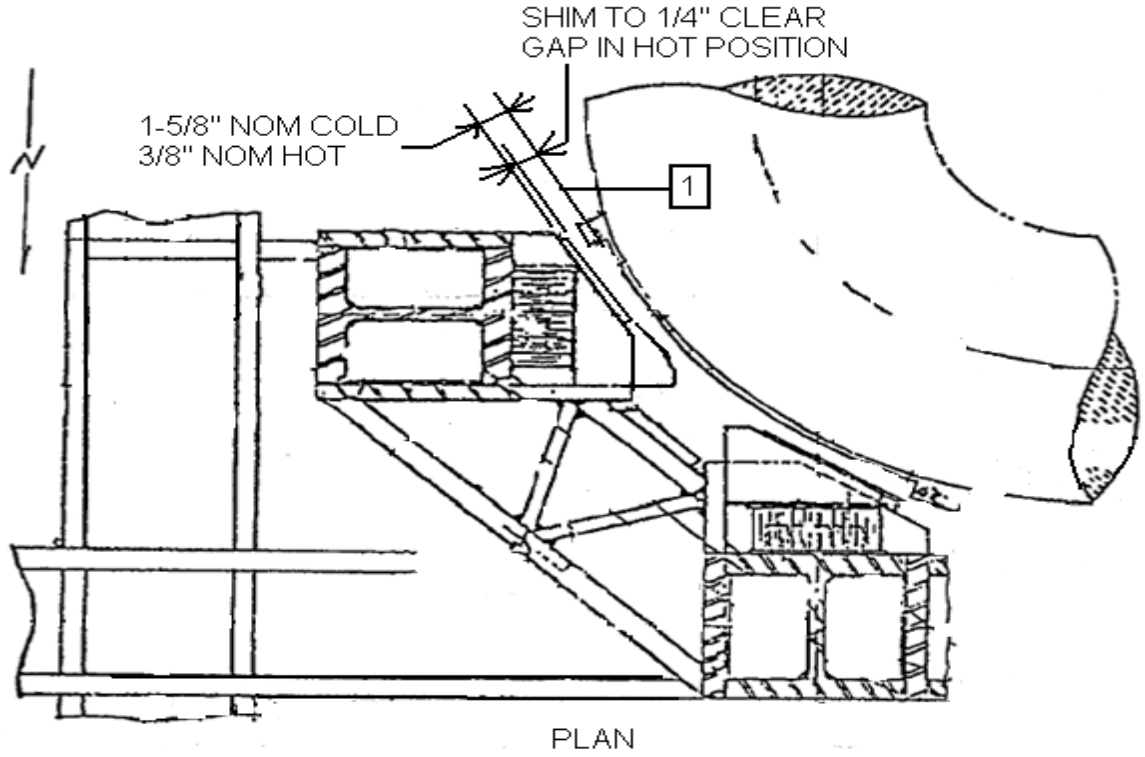

MEASURE POINT	BASE LINE MEASURE AT AMBIENT <105°F	OBSERVED			MEASURED	COOLDOWN FINAL MEASURED <105°F	REMARKS
		250°F (245°-255°)	350°F (345°-355°)	450°F (445°-455°)	557°F (553°-560°)		
LINE TEMP[1]							
INITIAL/ DATE	/	/	/	/	/		/

1 FOR INFO ONLY

Attachment 10
(Page 24 of 72)

PIPE RUPTURE PROTECTIVE DEVICES MAXIMUM PREDICTED THERMAL MOVEMENTS ACCEPTANCE CRITERIA AND DATA READINGS

Date _____

THERMAL EXPANSION TEST RESULTS/PROTECTION DEVICE NUMBER: ___PD08-10___

REF. DWG. NO. ___48W1708-13___ / BLDG. ___NVR___ / EL. ___734'__ / COORD. ___COL D____

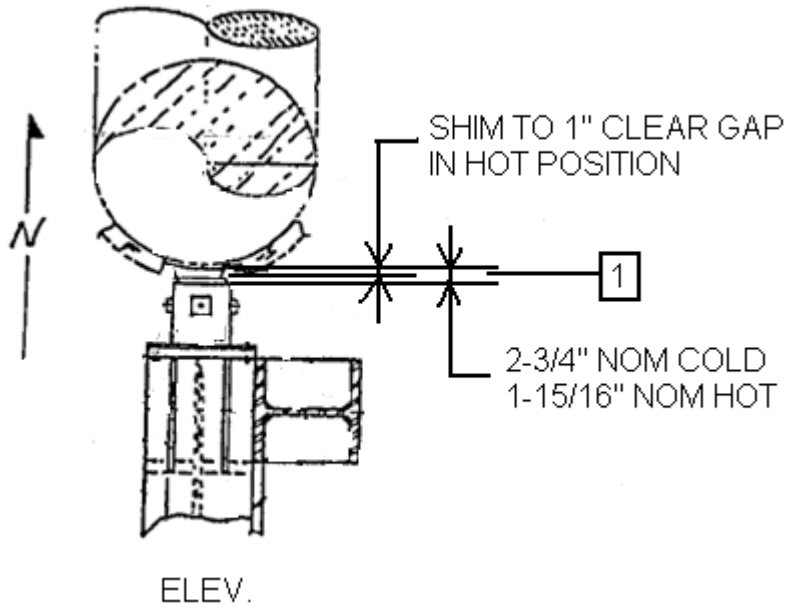

MEASURE POINT	BASE LINE MEASURE AT AMBIENT <105°F	OBSERVED			MEASURED	COOLDOWN FINAL MEASURED <105°F	REMARKS
		250°F (245°-255°)	350°F (345°-355°)	450°F (445°-455°)	557°F (553°-560°)		
LINE TEMP[1]							
INITIAL/ DATE	/	/	/	/	/		/

1 FOR INFO ONLY

Attachment 10
(Page 25 of 72)

PIPE RUPTURE PROTECTIVE DEVICES MAXIMUM PREDICTED THERMAL MOVEMENTS ACCEPTANCE CRITERIA AND DATA READINGS

Date _____

THERMAL EXPANSION TEST RESULTS/PROTECTION DEVICE NUMBER: ___PD08-11___

REF. DWG. NO. ___48W1708-10___ / BLDG. ___NVR___ / EL. ___756'___ / COORD. ___COL 5 AND "D" LINE___

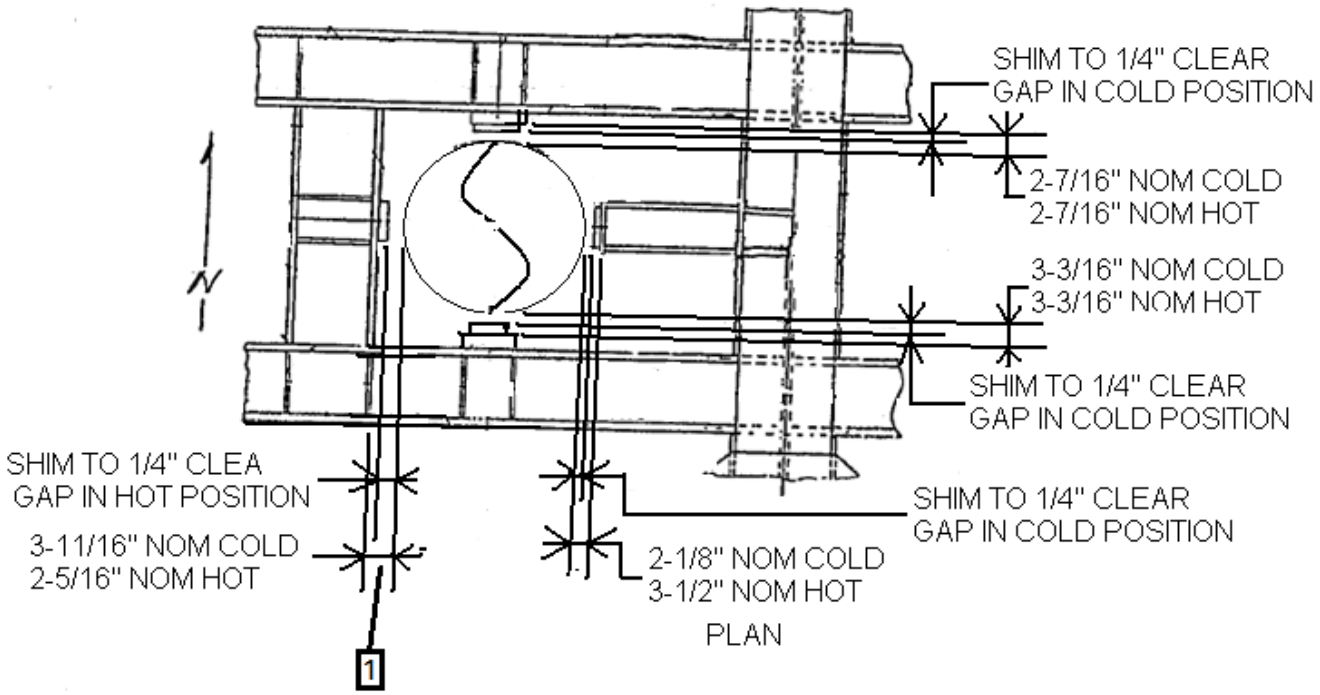

MEASURE POINT	BASE LINE MEASURE AT AMBIENT	OBSERVED			MEASURED	COOLDOWN FINAL MEASURED	REMARKS
		250°F	350°F	450°F	557°F		
LINE TEMP[1]							
INITIAL/DATE	/	/	/	/	/	/	/

1 FOR INFO ONLY

Attachment 10
(Page 26 of 72)

PIPE RUPTURE PROTECTIVE DEVICES MAXIMUM PREDICTED THERMAL MOVEMENTS ACCEPTANCE CRITERIA AND DATA READINGS

Date _____

THERMAL EXPANSION TEST RESULTS/PROTECTION DEVICE NUMBER: ___L32D___

REF. DWG. NO. ___48W1352-2___ / BLDG. ___TB___ / EL. ___737'__ / COORD. ___C12 TO C13___

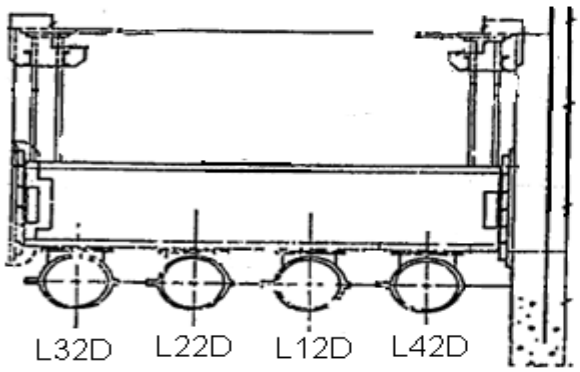

A2 - A2 LOOKING SOUTH

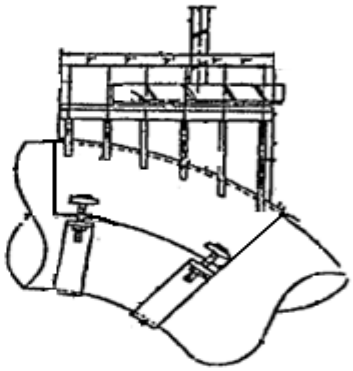

E2 - E2

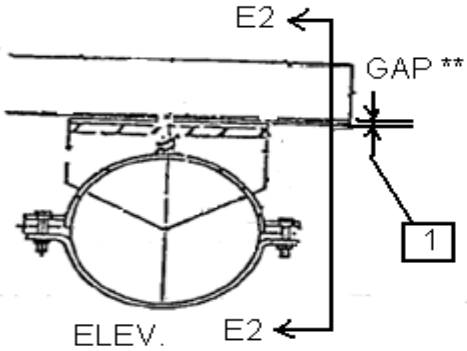

** The Acceptance Criterion for shimming load heads and fluorocarbon plate:

1. Hot Position - A. 1/2" max. at cloest point of interior envelope of load head and plate girder.
   B. 7/8" max. at corner of envelope of the load head and plate girder
2. Cold Position - Minimum cold position gap is 1/16" after pre-operational test is complete.

MEASURE POINT	BASE LINE MEASURE AT AMBIENT <105°F	OBSERVED			MEASURED	COOLDOWN FINAL MEASURED <105°F	REMARKS
		250°F (245°-255°)	350°F (345°-355°)	450°F (445°-455°)	557°F (553°-560°)		
LINE TEMP[1]							
INITIAL/ DATE	/	/	/	/	/		/

1 FOR INFO ONLY

Attachment 10
(Page 27 of 72)

PIPE RUPTURE PROTECTIVE DEVICES MAXIMUM PREDICTED THERMAL MOVEMENTS ACCEPTANCE CRITERIA AND DATA READINGS

Date _____

THERMAL EXPANSION TEST RESULTS/PROTECTION DEVICE NUMBER: ___M42S___

REF. DWG. NO. ___48W1350-1 & -2___ / BLDG. ___TB___ / EL. ___708'__ / COORD. ___M AND T12___

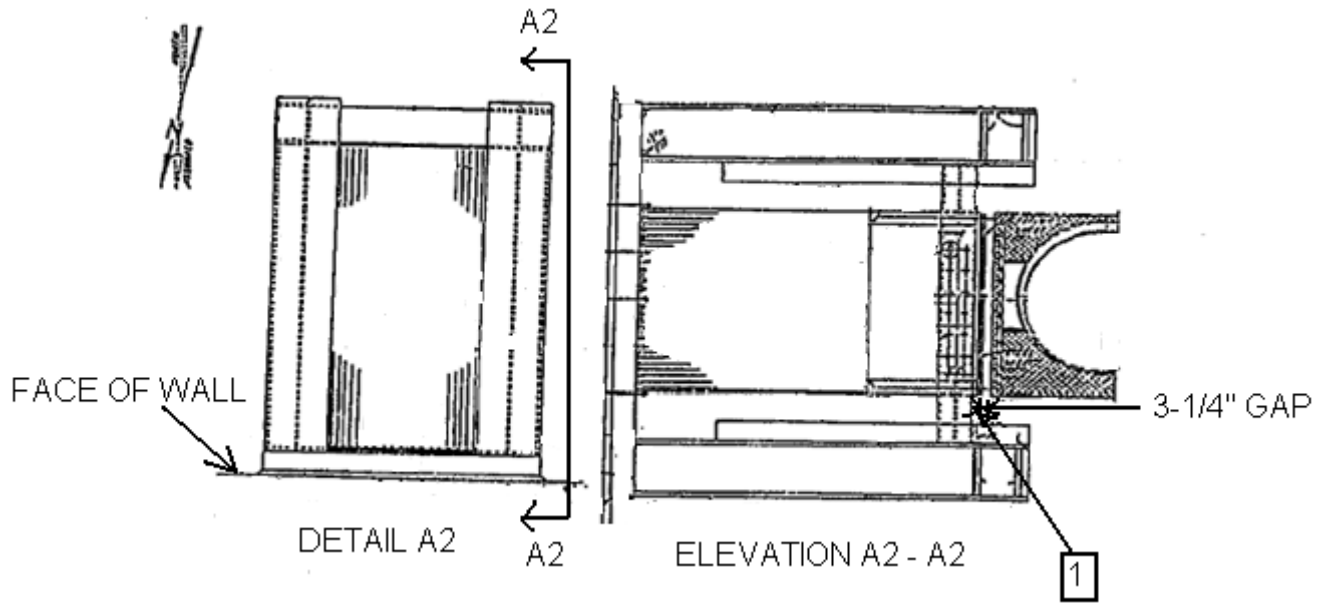

MEASURE POINT	BASE LINE MEASURE AT AMBIENT <105°F	OBSERVED			MEASURED	COOLDOWN FINAL MEASURED <105°F	REMARKS
		250°F (245°-255°)	350°F (345°-355°)	450°F (445°-455°)	557°F (553°-560°)		
LINE TEMP[1]							
INITIAL/ DATE	/	/	/	/	/		/

1 FOR INFO ONLY

Attachment 10
(Page 28 of 72)

PIPE RUPTURE PROTECTIVE DEVICES MAXIMUM PREDICTED THERMAL MOVEMENTS ACCEPTANCE CRITERIA AND DATA READINGS

Date _____

THE FOLLOWING PIPE RUPTURE PROTECTIVE DEVICES ARE LOCATED ON THE MAIN STEAM LINES LOOP 4

THERMAL EXPANSION TEST RESULTS/PROTECTION DEVICE NUMBER: ___PD00-8___

REF. DWG. NO. ___48W1700-8___ / BLDG. ___I.C.___ / EL. ___736___ / COORD. ___AZ 0°___

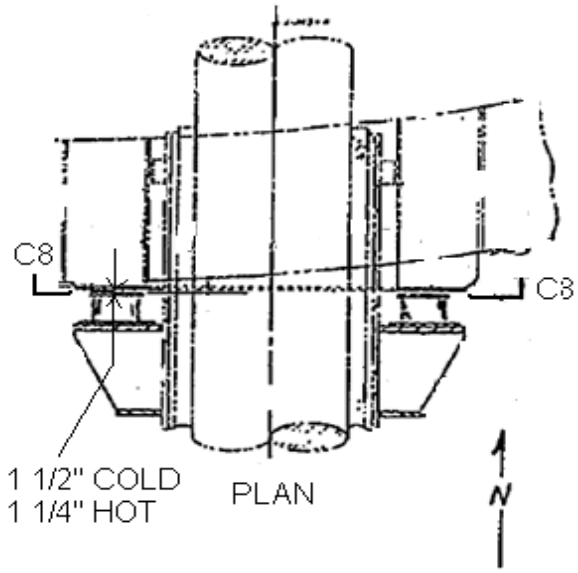

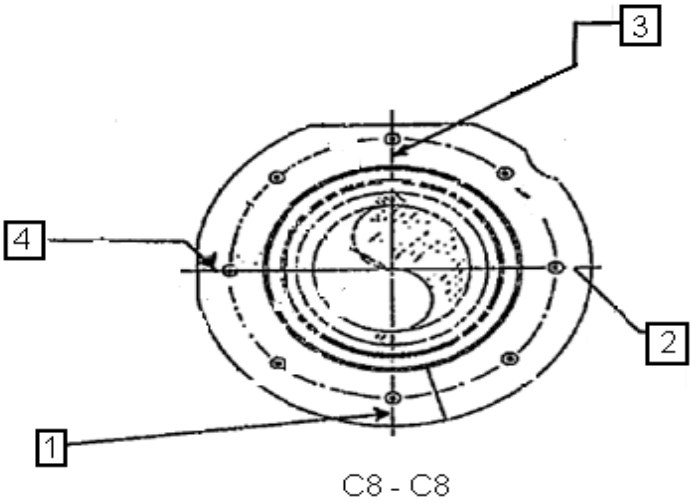

MEASURE POINT	BASE LINE MEASURE AT AMBIENT <105°F	OBSERVED			MEASURED	COOLDOWN FINAL MEASURED <105°F	REMARKS
		250°F (245°-255°)	350°F (345°-355°)	450°F (445°-455°)	557°F (553°-560°)		
LINE TEMP[1]							
INITIAL/ DATE	/	/	/	/	/		/

1 FOR INFO ONLY

Attachment 10
(Page 29 of 72)

PIPE RUPTURE PROTECTIVE DEVICES MAXIMUM PREDICTED THERMAL MOVEMENTS ACCEPTANCE CRITERIA AND DATA READINGS

Date _____

THERMAL EXPANSION TEST RESULTS/PROTECTION DEVICE NUMBER: ___PD00-40___

REF. DWG. NO. ___48W1700-30___ / BLDG. ___I.C.___ / EL. ___793___ / COORD. ___AZ 351°__

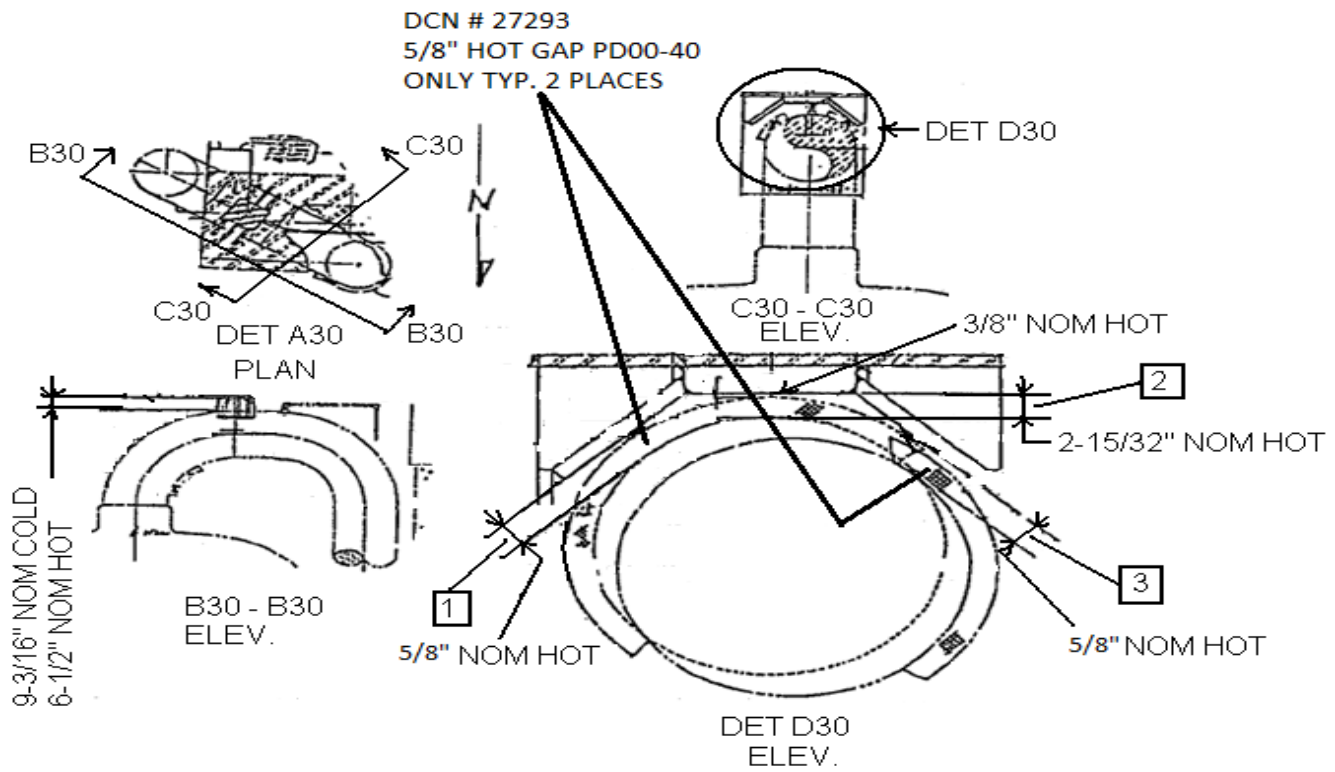

MEASURE POINT	BASE LINE MEASURE AT AMBIENT <105°F	OBSERVED			MEASURED	COOLDOWN FINAL MEASURED <105°F	REMARKS
		250°F (245°-255°)	350°F (345°-355°)	450°F (445°-455°)	557°F (553°-560°)		
LINE TEMP[1]							
INITIAL/ DATE	/	/	/	/	/		/

1 FOR INFO ONLY

Attachment 10
(Page 30 of 72)

PIPE RUPTURE PROTECTIVE DEVICES MAXIMUM PREDICTED THERMAL MOVEMENTS ACCEPTANCE CRITERIA AND DATA READINGS

Date _____

THERMAL EXPANSION TEST RESULTS/PROTECTION DEVICE NUMBER: ___PD00-41___

REF. DWG. NO. ___48W1700-29____ / BLDG. ___I.C.___ / EL. ___786___ / COORD. ___AZ 358°__

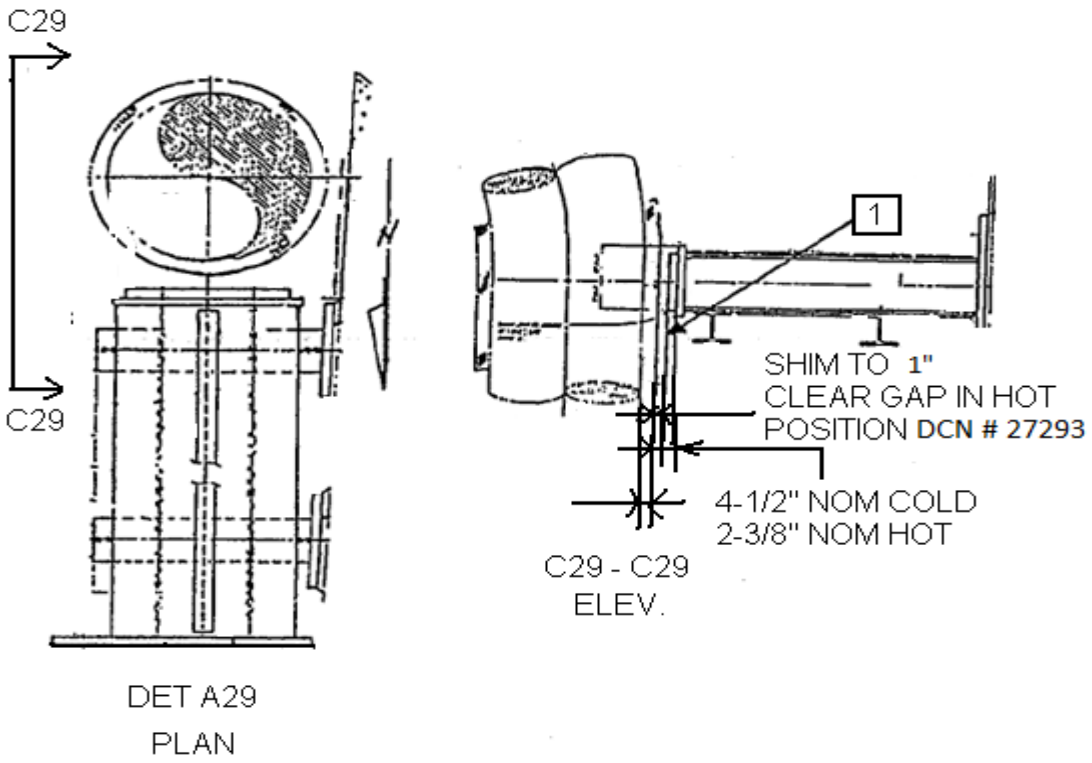

MEASURE POINT	BASE LINE MEASURE AT AMBIENT <105°F	OBSERVED			MEASURED	COOLDOWN FINAL MEASURED <105°F	REMARKS
		250°F (245°-255°)	350°F (345°-355°)	450°F (445°-455°)	557°F (553°-560°)		
LINE TEMP[1]							
INITIAL/ DATE	/	/	/	/	/		/

1 FOR INFO ONLY

Attachment 10
(Page 31 of 72)

PIPE RUPTURE PROTECTIVE DEVICES MAXIMUM PREDICTED THERMAL MOVEMENTS ACCEPTANCE CRITERIA AND DATA READINGS

Date _____

THERMAL EXPANSION TEST RESULTS/PROTECTION DEVICE NUMBER: ___PD07-10___

REF. DWG. NO. ___48W1707-21___ / BLDG. ___SVR___ / EL. ___737___ / COORD. ___COL 13 AND "F" LINE___

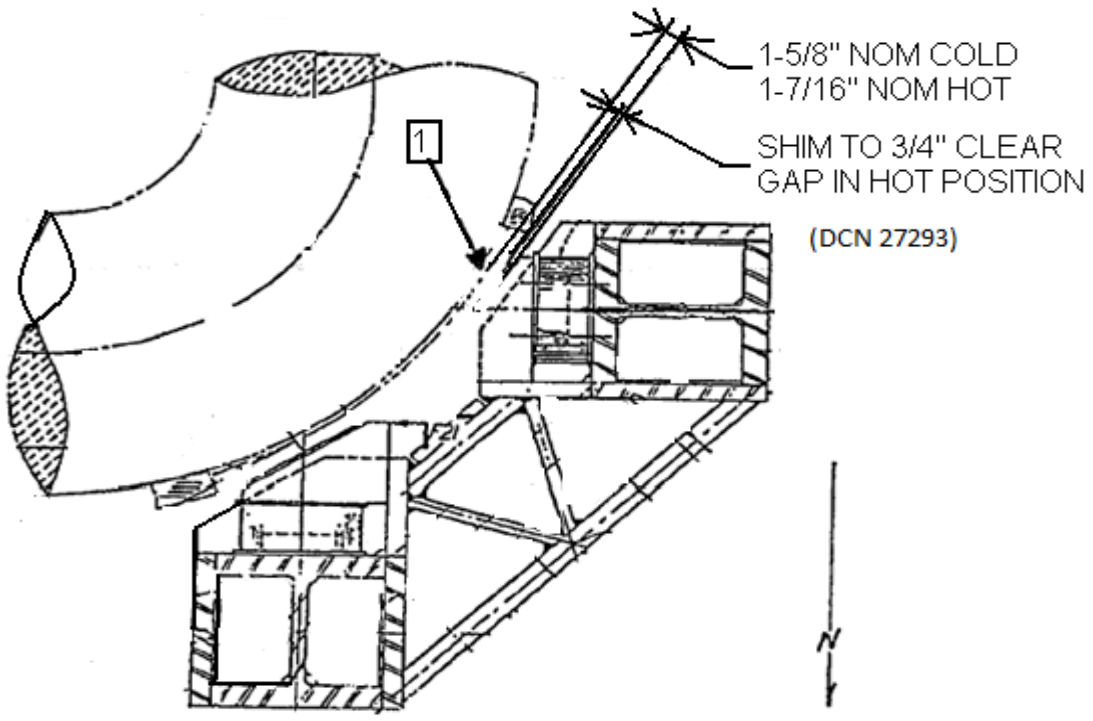

PLAN

MEASURE POINT	BASE LINE MEASURE AT AMBIENT <105°F	OBSERVED			MEASURED	COOLDOWN FINAL MEASURED <105°F	REMARKS
		250°F (245°-255°)	350°F (345°-355°)	450°F (445°-455°)	557°F (553°-560°)		
LINE TEMP[1]							
INITIAL/ DATE	/	/	/	/	/		/

1 FOR INFO ONLY

Attachment 10
(Page 32 of 72)

PIPE RUPTURE PROTECTIVE DEVICES MAXIMUM PREDICTED THERMAL MOVEMENTS ACCEPTANCE CRITERIA AND DATA READINGS

Date _____

THERMAL EXPANSION TEST RESULTS/PROTECTION DEVICE NUMBER: ___PD07-11___

REF. DWG. NO. ___48W1707-21___ / BLDG. ___SVR___ / EL. ___737__ / COORD. ___COL 13 AND "F" LINE___

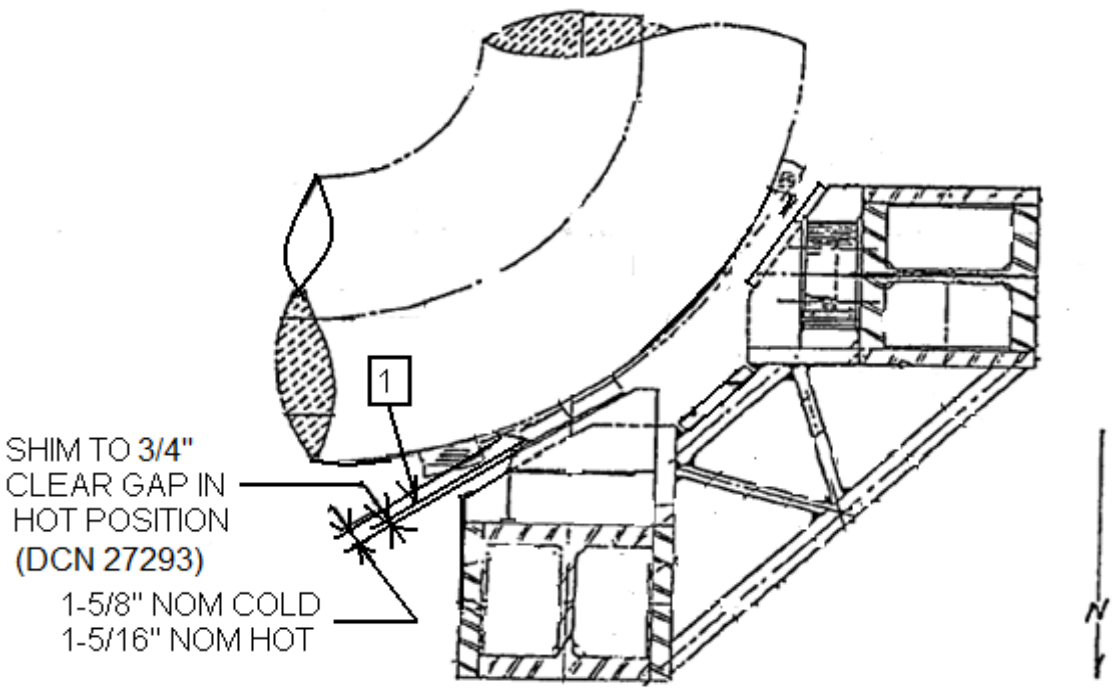

PLAN

MEASURE POINT	BASE LINE MEASURE AT AMBIENT <105°F	OBSERVED			MEASURED	COOLDOWN FINAL MEASURED <105°F	REMARKS
		250°F (245°-255°)	350°F (345°-355°)	450°F (445°-455°)	557°F (553°-560°)		
LINE TEMP[1]							
INITIAL/ DATE	/	/	/	/	/		/

1 FOR INFO ONLY

Attachment 10
(Page 33 of 72)

PIPE RUPTURE PROTECTIVE DEVICES MAXIMUM PREDICTED THERMAL MOVEMENTS ACCEPTANCE CRITERIA AND DATA READINGS

Date _____

THERMAL EXPANSION TEST RESULTS/PROTECTION DEVICE NUMBER: ___PD07-13___

REF. DWG. NO. ___48W1707-23___ / BLDG. ___SVR___ / EL. ___737__ / COORD. ___COL 3 AND "A" LINE___

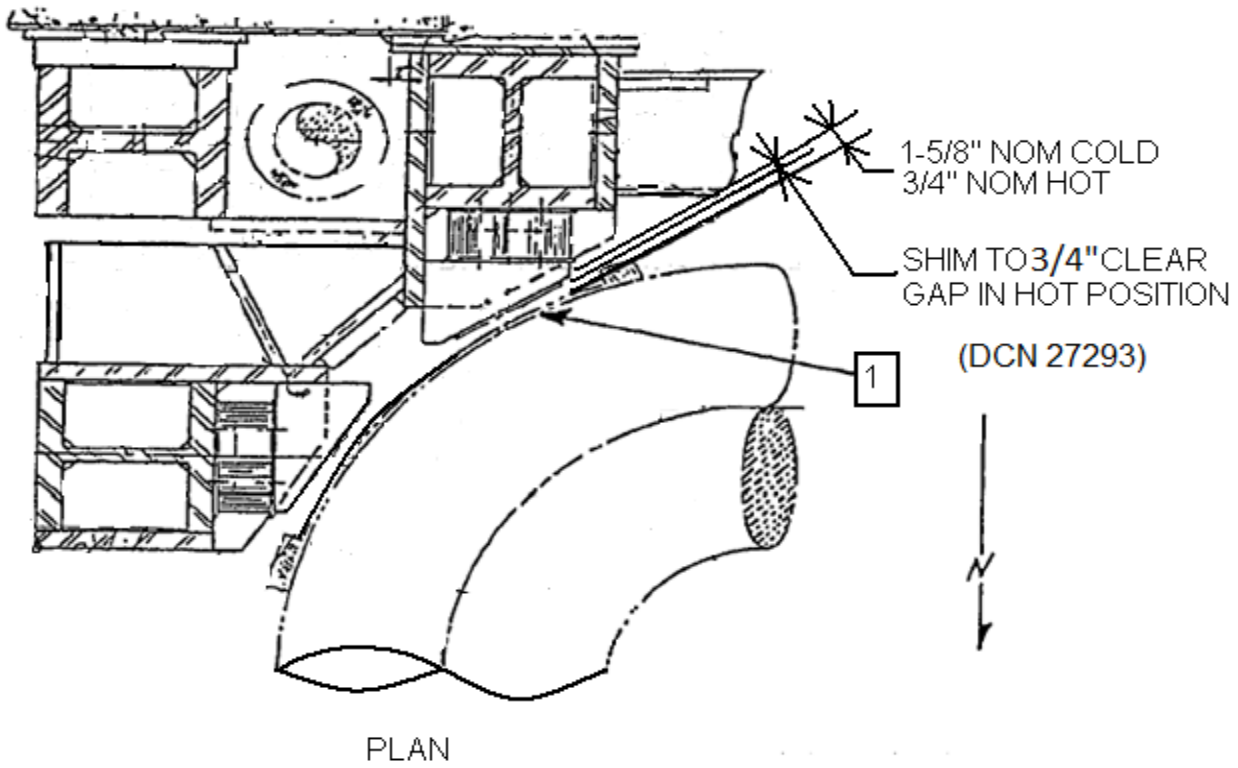

MEASURE POINT	BASE LINE MEASURE AT AMBIENT <105°F	OBSERVED			MEASURED	COOLDOWN FINAL MEASURED <105°F	REMARKS
		250°F (245°-255°)	350°F (345°-355°)	450°F (445°-455°)	557°F (553°-560°)		
LINE TEMP[1]							
INITIAL/ DATE	/	/	/	/	/		/

1 FOR INFO ONLY

Attachment 10
(Page 34 of 72)

PIPE RUPTURE PROTECTIVE DEVICES MAXIMUM PREDICTED THERMAL MOVEMENTS ACCEPTANCE CRITERIA AND DATA READINGS

Date _____

THERMAL EXPANSION TEST RESULTS/PROTECTION DEVICE NUMBER: ___PD07-14__

REF. DWG. NO. ___48W1707-23___ / BLDG. ___SVR___ / EL. ___737__ / COORD. ___COL 3 AND "A" LINE___

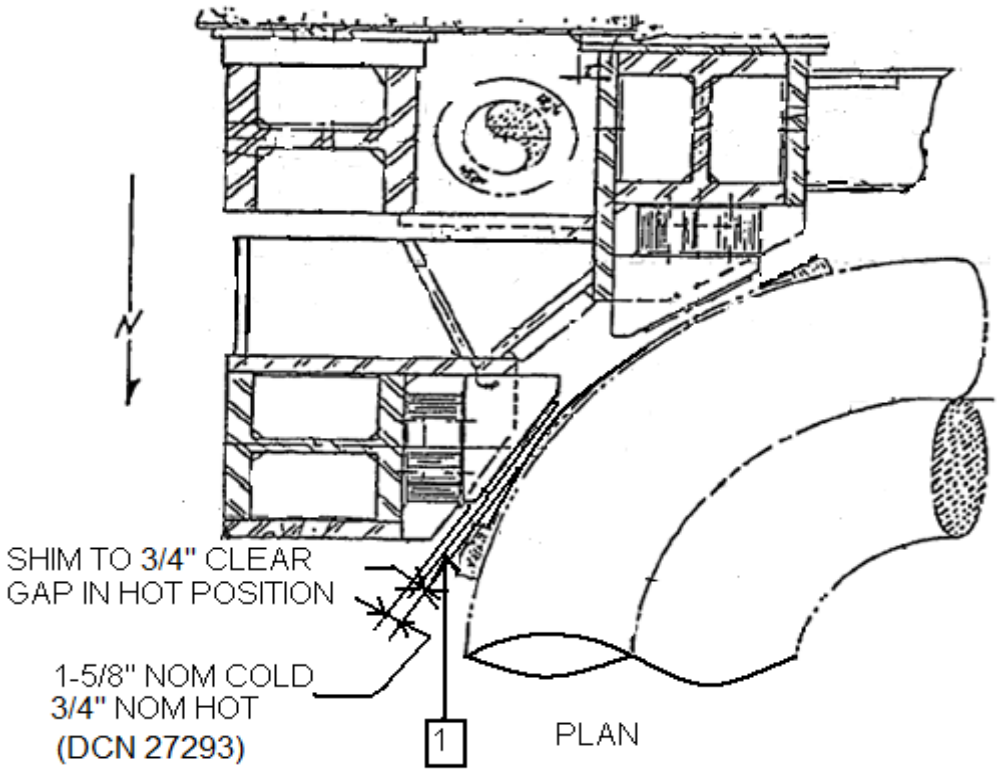

MEASURE POINT	BASE LINE MEASURE AT AMBIENT <105°F	OBSERVED			MEASURED	COOLDOWN FINAL MEASURED <105°F	REMARKS
		250°F (245°-255°)	350°F (345°-355°)	450°F (445°-455°)	557°F (553°-560°)		
LINE TEMP[1]							
INITIAL/ DATE	/	/	/	/	/		/

1 FOR INFO ONLY

Attachment 10
(Page 35 of 72)

PIPE RUPTURE PROTECTIVE DEVICES MAXIMUM PREDICTED THERMAL MOVEMENTS ACCEPTANCE CRITERIA AND DATA READINGS

Date _____

THERMAL EXPANSION TEST RESULTS/PROTECTION DEVICE NUMBER: ___L42D___

REF. DWG. NO. ___48W1352-2___ / BLDG. ___TB___ / EL. ___737'__ / COORD. ___C12 TO C13___

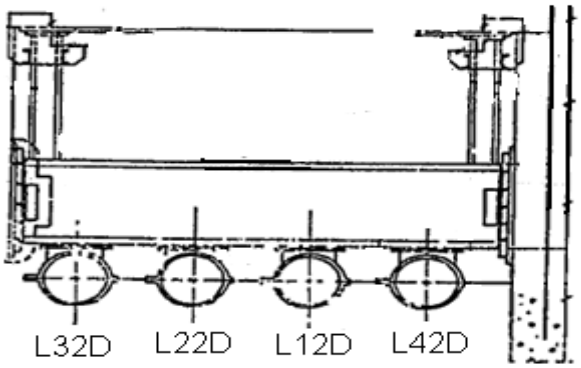

A2 - A2 LOOKING SOUTH

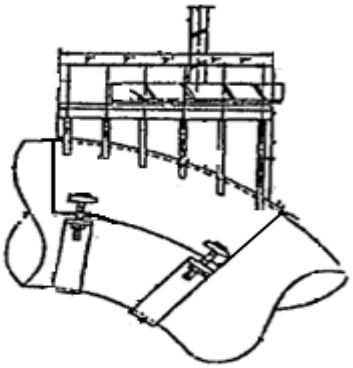

E2 - E2

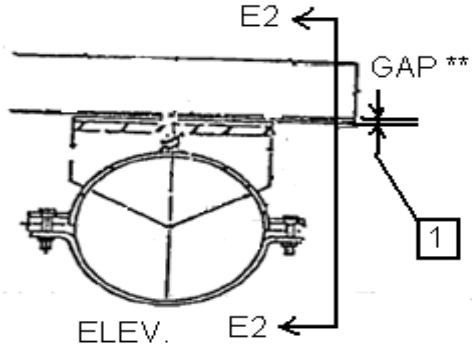

** The Acceptance Criterion for shimming load heads and fluorocarbon plate:

1. Hot Position - A. 1/2" max. at cloest point of interior envelope of load head and plate girder.
   B. 7/8" max. at corner of envelope of the load head and plate girder
2. Cold Position - Minimum cold position gap is 1/16" after pre-operational test is complete.

MEASURE POINT	BASE LINE MEASURE AT AMBIENT <105°F	OBSERVED			MEASURED	COOLDOWN FINAL MEASURED <105°F	REMARKS
		250°F (245°-255°)	350°F (345°-355°)	450°F (445°-455°)	557°F (553°-560°)		
LINE TEMP[1]							
INITIAL/ DATE	/	/	/	/	/		/

1 FOR INFO ONLY

Attachment 10
(Page 36 of 72)

PIPE RUPTURE PROTECTIVE DEVICES MAXIMUM PREDICTED THERMAL MOVEMENTS ACCEPTANCE CRITERIA AND DATA READINGS

Date _____

THE FOLLOWING PIPE RUPTURE PROTECTIVE DEVICES ARE LOCATED ON THE MAIN FEEDWATER LINE LOOP 1

THERMAL EXPANSION TEST RESULTS/PROTECTION DEVICE NUMBER: ___PD00-11___

REF. DWG. NO. ___48W1700-14___ / BLDG. ___I.C.___ / EL. ___724'-3"___ / COORD. ___AZ 13___

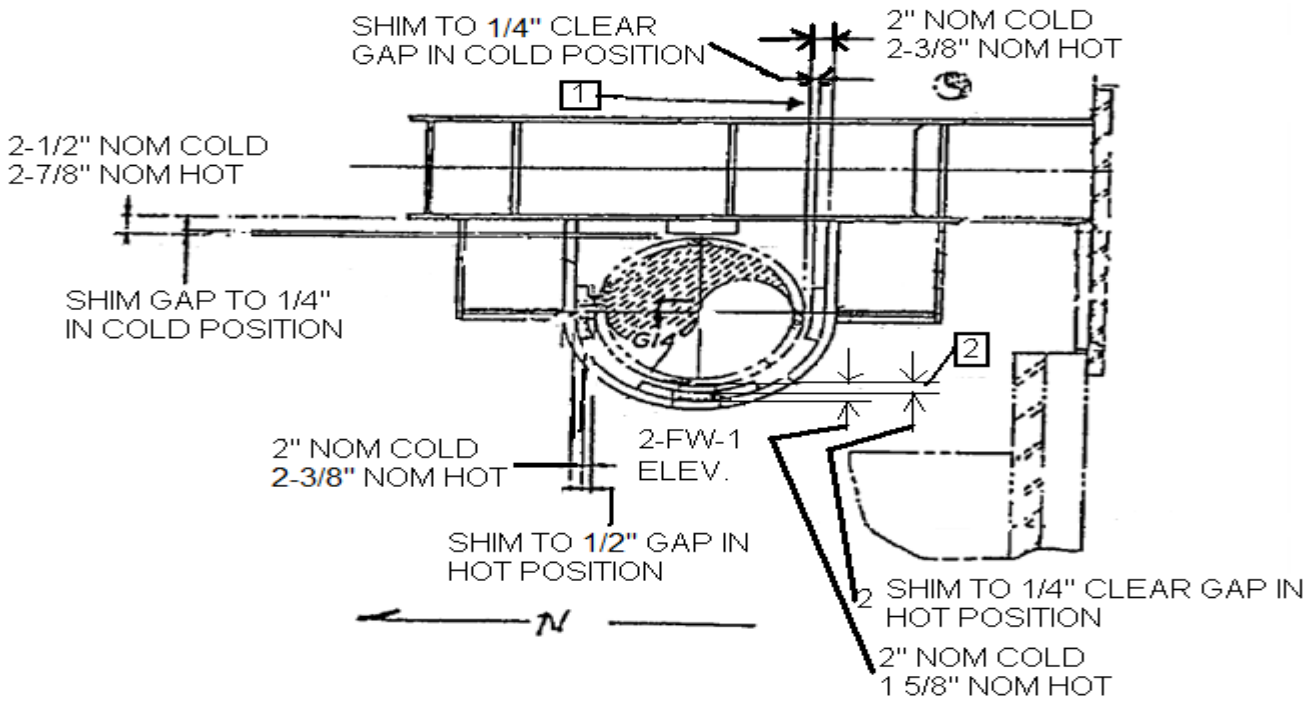

MEASURE POINT	BASE LINE MEASURE AT AMBIENT <105°F	OBSERVED			MEASURED	COOLDOWN FINAL MEASURED <105°F	REMARKS
		250°F (245°-255°)	350°F (345°-355°)	450°F (445°-455°)	557°F (553°-560°)		
LINE TEMP[1]							
INITIAL/ DATE	/	/	/	/	/		/

1 FOR INFO ONLY

Attachment 10
(Page 37 of 72)

PIPE RUPTURE PROTECTIVE DEVICES MAXIMUM PREDICTED THERMAL MOVEMENTS ACCEPTANCE CRITERIA AND DATA READINGS

Date _____

THERMAL EXPANSION TEST RESULTS/PROTECTION DEVICE NUMBER: ___PD00-12___

REF. DWG. NO. ___48W1700-15___ / BLDG. ___I.C.___ / EL. ___724'-3"__ / COORD. ___AZ 27°__

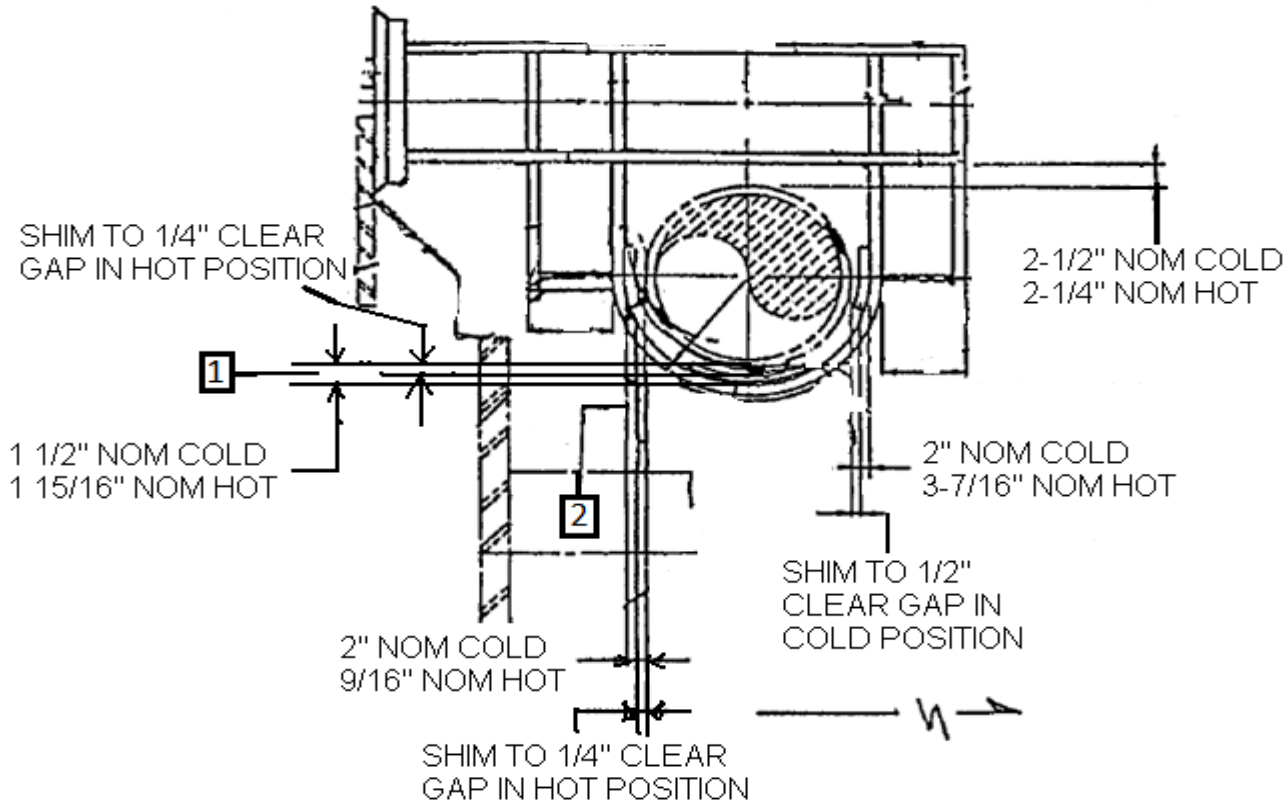

MEASURE POINT	BASE LINE MEASURE AT AMBIENT <105°F	OBSERVED			MEASURED	COOLDOWN FINAL MEASURED <105°F	REMARKS
		250°F (245°-255°)	350°F (345°-355°)	450°F (445°-455°)	557°F (553°-560°)		
LINE TEMP[1]							
INITIAL/ DATE	/	/	/	/	/		/

1 FOR INFO ONLY

Attachment 10
(Page 38 of 72)

PIPE RUPTURE PROTECTIVE DEVICES MAXIMUM PREDICTED THERMAL MOVEMENTS ACCEPTANCE CRITERIA AND DATA READINGS

Date _____

THERMAL EXPANSION TEST RESULTS/PROTECTION DEVICE NUMBER: ___PD00-13___

REF. DWG. NO. ___48W1700-17___ / BLDG. ___I.C.___ / EL. ___730'-7 1/2"___ / COORD. ___AZ 36.9°___

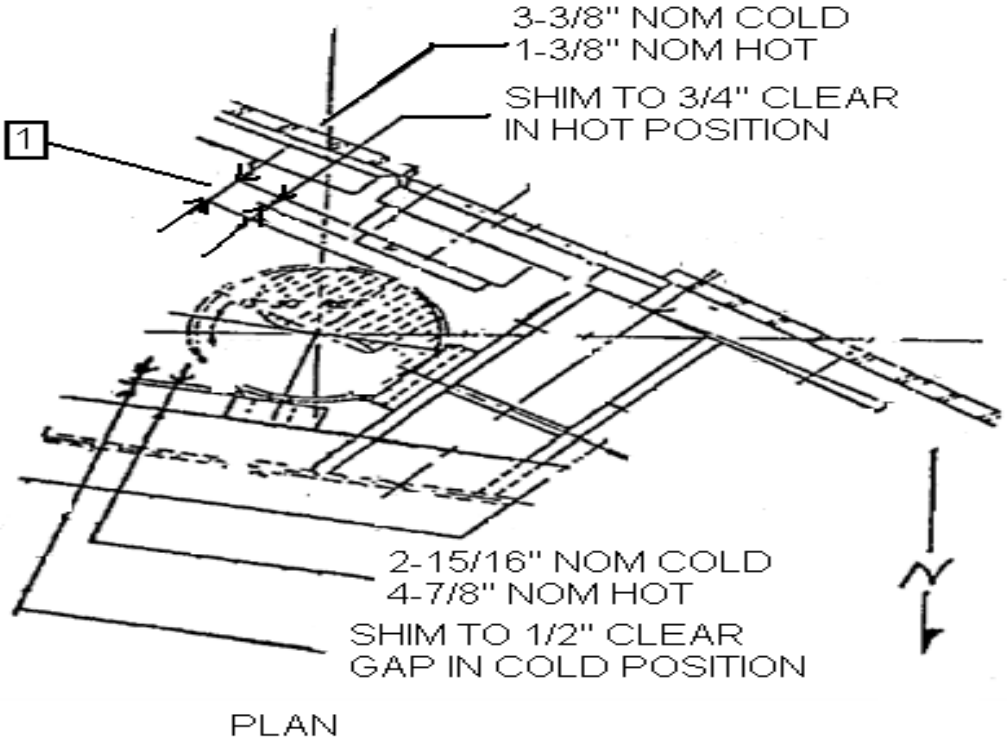

MEASURE POINT	BASE LINE MEASURE AT AMBIENT <105°F	OBSERVED			MEASURED	COOLDOWN FINAL MEASURED <105°F	REMARKS
		250°F (245°-255°)	350°F (345°-355°)	450°F (445°-455°)	557°F (553°-560°)		
LINE TEMP[1]							
INITIAL/ DATE	/	/	/	/	/		/

1 FOR INFO ONLY

Attachment 10
(Page 39 of 72)

PIPE RUPTURE PROTECTIVE DEVICES MAXIMUM PREDICTED THERMAL MOVEMENTS ACCEPTANCE CRITERIA AND DATA READINGS

Date _____

THERMAL EXPANSION TEST RESULTS/PROTECTION DEVICE NUMBER: ___PD00-14___

REF. DWG. NO. ___48W1700-17___ / BLDG. ___I.C.___ / EL. ___732___ / COORD. ___AZ 33° 41'___

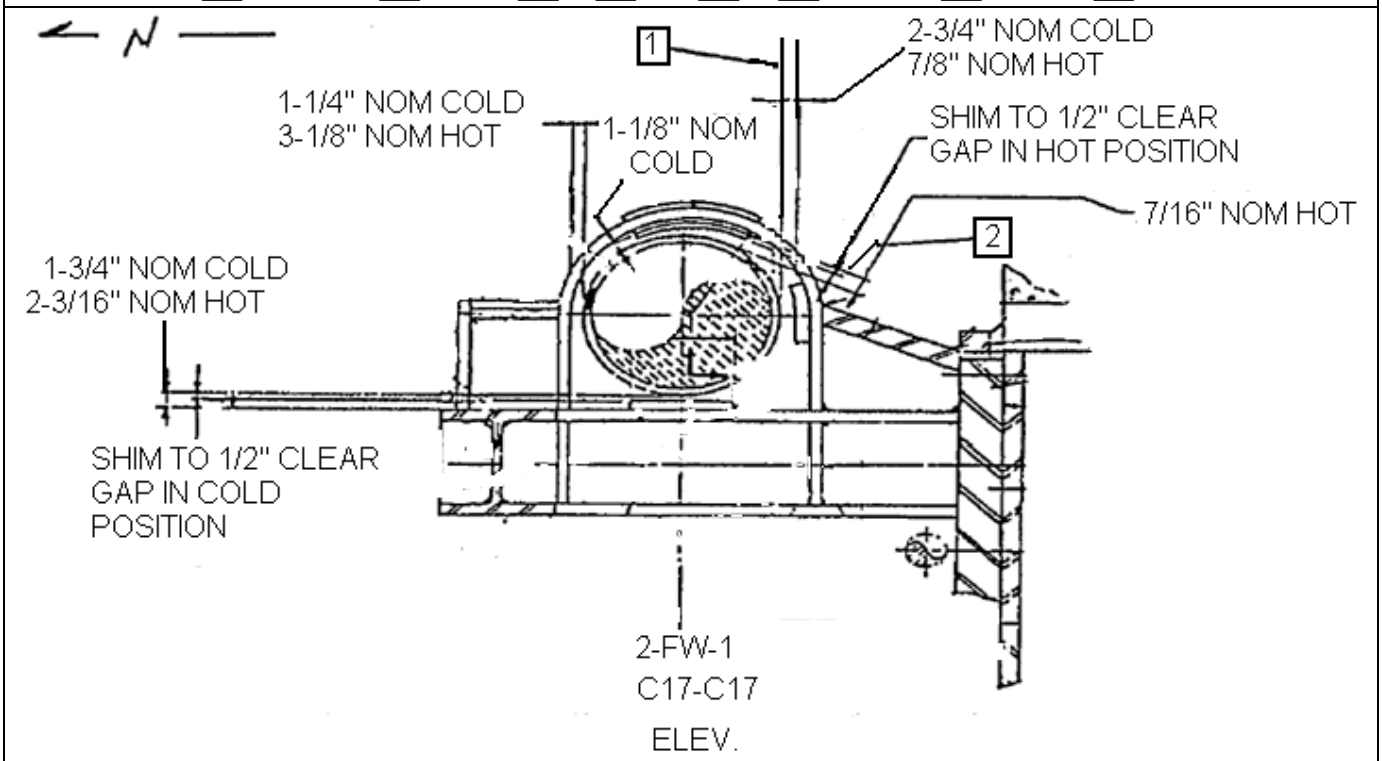

MEASURE POINT	BASE LINE MEASURE AT AMBIENT <105°F	OBSERVED			MEASURED	COOLDOWN FINAL MEASURED <105°F	REMARKS
		250°F (245°-255°)	350°F (345°-355°)	450°F (445°-455°)	557°F (553°-560°)		
LINE TEMP[1]							
INITIAL/ DATE	/	/	/	/	/		/

1 FOR INFO ONLY

Attachment 10
(Page 40 of 72)

PIPE RUPTURE PROTECTIVE DEVICES MAXIMUM PREDICTED THERMAL MOVEMENTS ACCEPTANCE CRITERIA AND DATA READINGS

Date _____

THERMAL EXPANSION TEST RESULTS/PROTECTION DEVICE NUMBER: ___PD00-15___

REF. DWG. NO. ___48W1700-17___ / BLDG. ___I.C.___ / EL. ___732___ / COORD. ___AZ 30° 3'___

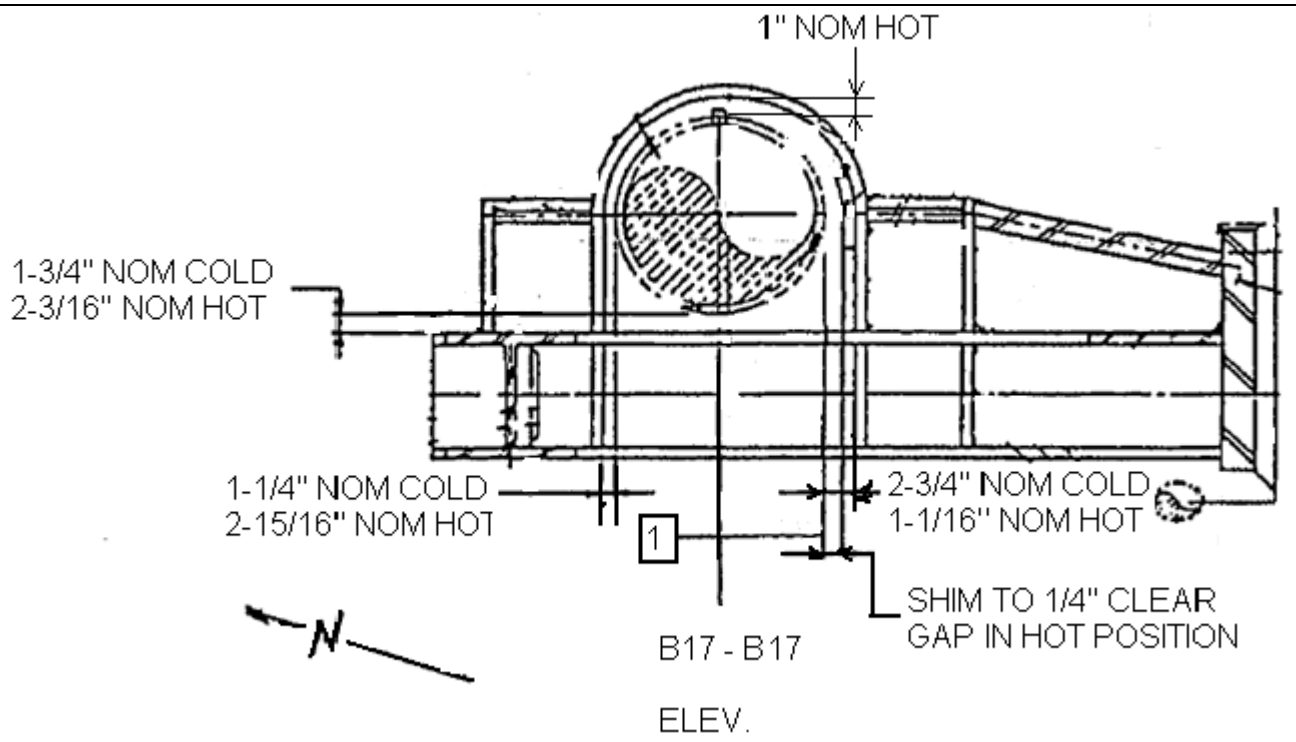

MEASURE POINT	BASE LINE MEASURE AT AMBIENT <105°F	OBSERVED			MEASURED	COOLDOWN FINAL MEASURED <105°F	REMARKS
		250°F (245°-255°)	350°F (345°-355°)	450°F (445°-455°)	557°F (553°-560°)		
LINE TEMP[1]							
INITIAL/ DATE	/	/	/	/	/		/

1 FOR INFO ONLY

Attachment 10
(Page 41 of 72)

PIPE RUPTURE PROTECTIVE DEVICES MAXIMUM PREDICTED THERMAL MOVEMENTS ACCEPTANCE CRITERIA AND DATA READINGS

Date _____

THERMAL EXPANSION TEST RESULTS/PROTECTION DEVICE NUMBER: ___PD00-33____

REF. DWG. NO. ___48W1700-16____ / BLDG. ___I.C.___ / EL. ___728____ / COORD. ___AZ 33° 41'___

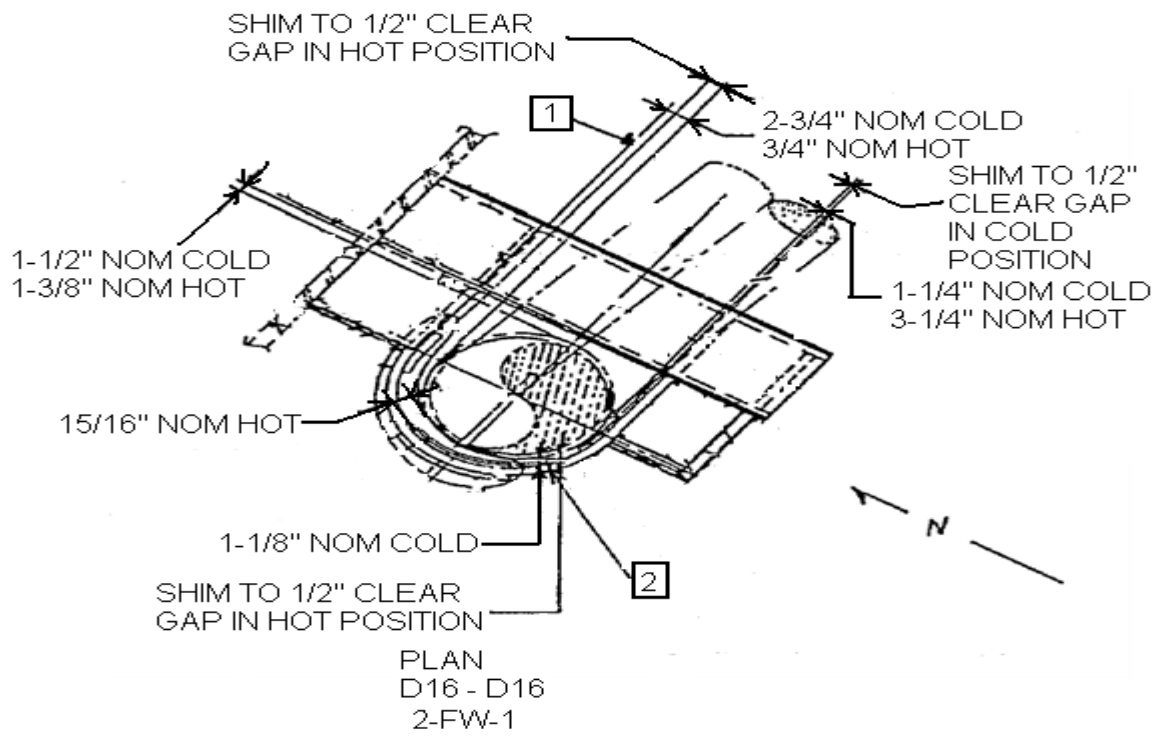

MEASURE POINT	BASE LINE MEASURE AT AMBIENT <105°F	OBSERVED			MEASURED	COOLDOWN FINAL MEASURED <105°F	REMARKS
		250°F (245°-255°)	350°F (345°-355°)	450°F (445°-455°)	557°F (553°-560°)		
LINE TEMP[1]							
INITIAL/ DATE	/	/	/	/	/		/

1 FOR INFO ONLY

Attachment 10
(Page 42 of 72)

PIPE RUPTURE PROTECTIVE DEVICES MAXIMUM PREDICTED THERMAL MOVEMENTS ACCEPTANCE CRITERIA AND DATA READINGS

Date _____

THE FOLLOWING PIPE RUPTURE PROTECTIVE DEVICES ARE LOCATED ON THE MAIN FEEDWATER LINE LOOP 2

THERMAL EXPANSION TEST RESULTS/PROTECTION DEVICE NUMBER: ___PD00-17____

REF. DWG. NO. ___48W1700-18___ / BLDG. ___I.C.____ / EL. ___724___ / COORD. ___AZ 166°___

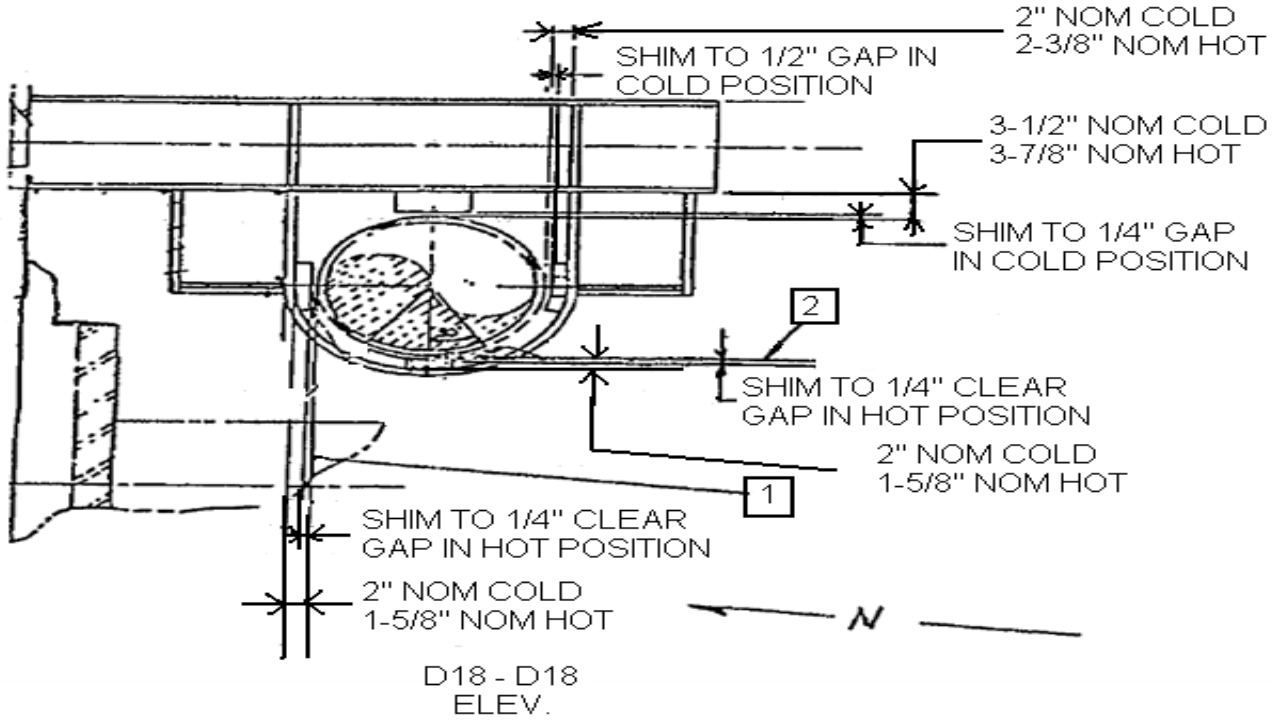

MEASURE POINT	BASE LINE MEASURE AT AMBIENT <105°F	OBSERVED			MEASURED	COOLDOWN FINAL MEASURED <105°F	REMARKS
		250°F (245°-255°)	350°F (345°-355°)	450°F (445°-455°)	557°F (553°-560°)		
LINE TEMP[1]							
INITIAL/ DATE	/	/	/	/	/		/

1 FOR INFO ONLY

Attachment 10
(Page 43 of 72)

PIPE RUPTURE PROTECTIVE DEVICES MAXIMUM PREDICTED THERMAL MOVEMENTS ACCEPTANCE CRITERIA AND DATA READINGS

Date _____

THERMAL EXPANSION TEST RESULTS/PROTECTION DEVICE NUMBER: ___PD00-18____

REF. DWG. NO. ___48W1700-19___ / BLDG. ___I.C.___ / EL. ___724___ / COORD. ___AZ 152°___

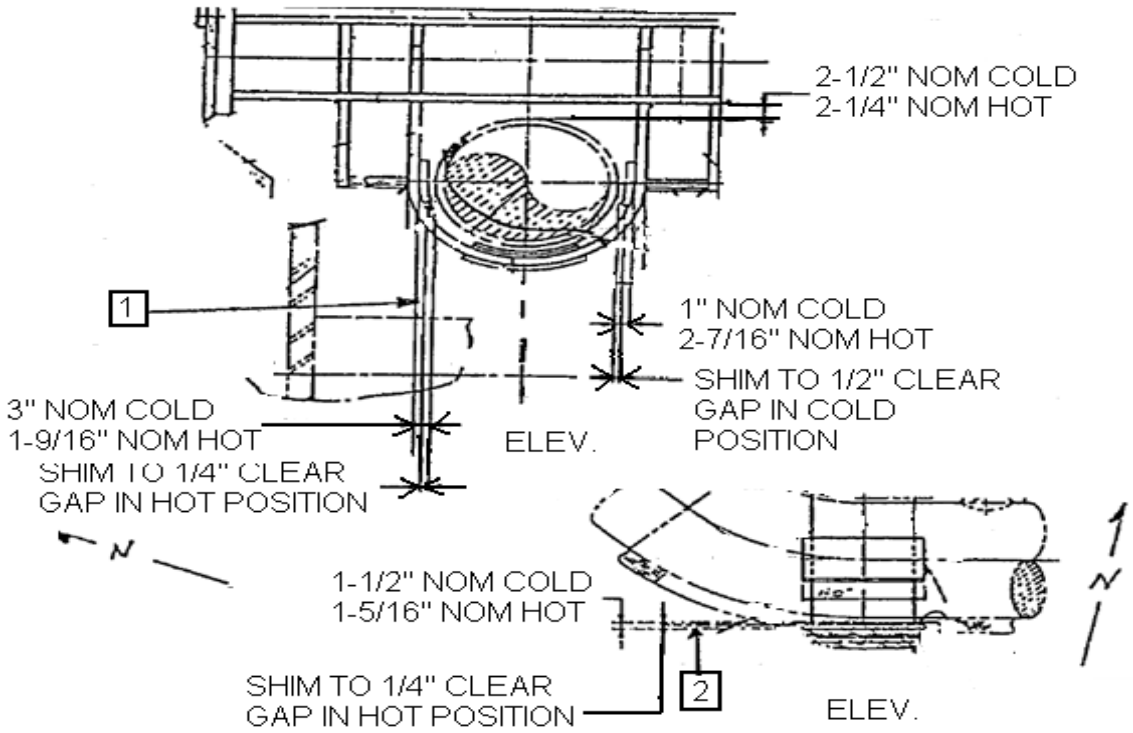

MEASURE POINT	BASE LINE MEASURE AT AMBIENT <105°F	OBSERVED			MEASURED	COOLDOWN FINAL MEASURED <105°F	REMARKS
		250°F (245°-255°)	350°F (345°-355°)	450°F (445°-455°)	557°F (553°-560°)		
LINE TEMP[1]							
INITIAL/ DATE	/	/	/	/	/		/

1 FOR INFO ONLY

Attachment 10
(Page 44 of 72)

PIPE RUPTURE PROTECTIVE DEVICES MAXIMUM PREDICTED THERMAL MOVEMENTS ACCEPTANCE CRITERIA AND DATA READINGS

Date _____

THERMAL EXPANSION TEST RESULTS/PROTECTION DEVICE NUMBER: ___PD00-19____

REF. DWG. NO. ___48W1700-21___ / BLDG. ___I.C.___ / EL. ___730'-7"___ / COORD. ___AZ 143°___

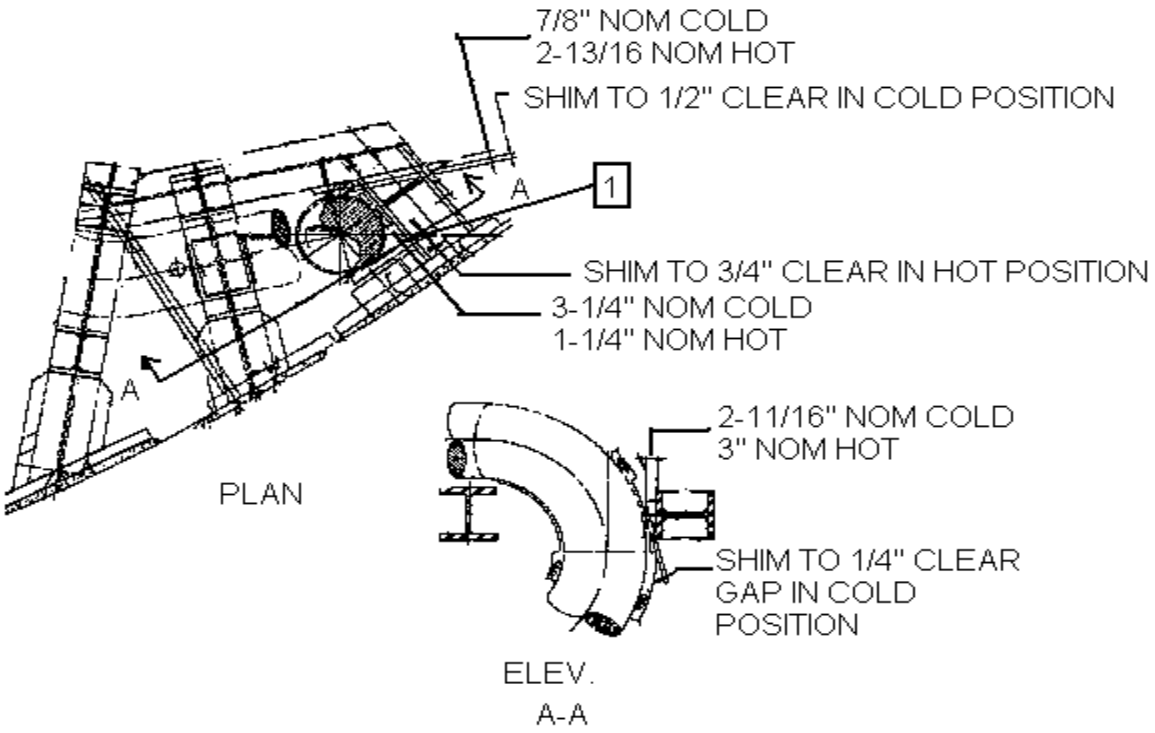

MEASURE POINT	BASE LINE MEASURE AT AMBIENT <105°F	OBSERVED			MEASURED	COOLDOWN FINAL MEASURED <105°F	REMARKS
		250°F (245°-255°)	350°F (345°-355°)	450°F (445°-455°)	557°F (553°-560°)		
LINE TEMP[1]							
INITIAL/ DATE	/	/	/	/	/		/

1 FOR INFO ONLY

Attachment 10
(Page 45 of 72)

PIPE RUPTURE PROTECTIVE DEVICES MAXIMUM PREDICTED THERMAL MOVEMENTS ACCEPTANCE CRITERIA AND DATA READINGS

Date _____

THERMAL EXPANSION TEST RESULTS/PROTECTION DEVICE NUMBER: ___PD00-20____

REF. DWG. NO. ___48W1700-21____ / BLDG. ___I.C.___ / EL. ___732___ / COORD. ___AZ 145° 7'__

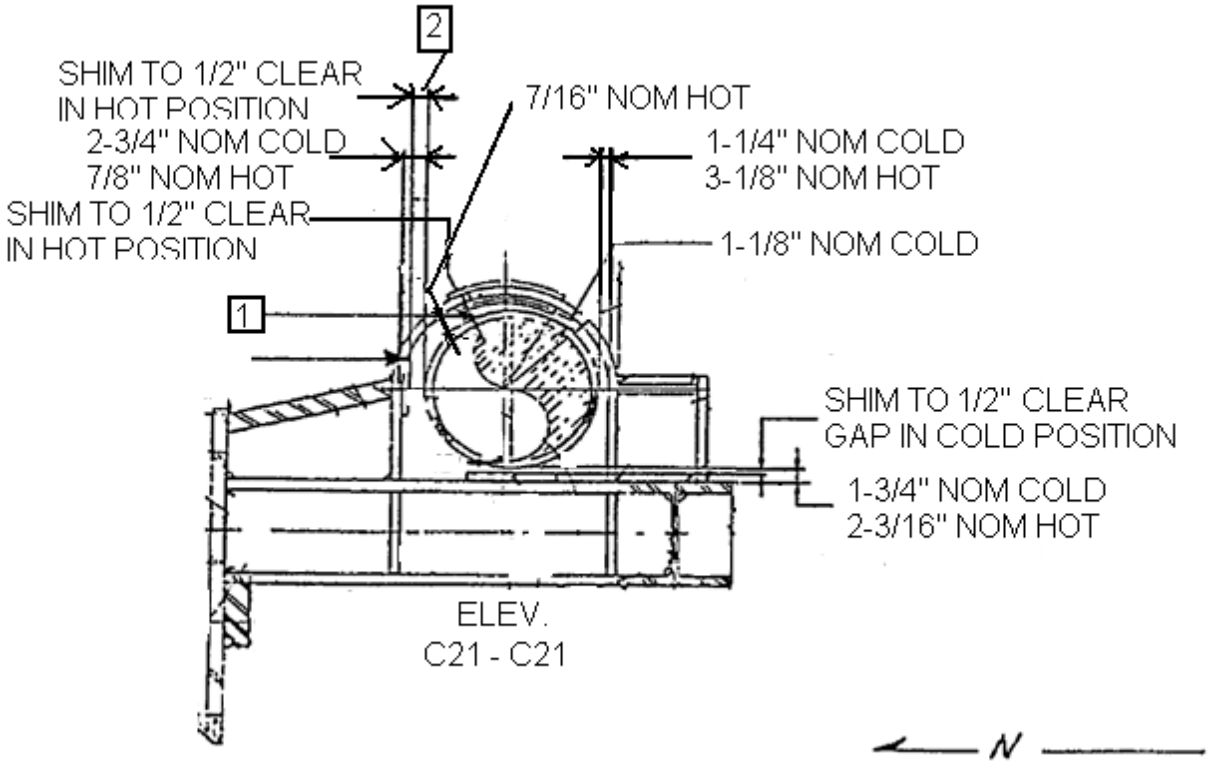

MEASURE POINT	BASE LINE MEASURE AT AMBIENT <105°F	OBSERVED			MEASURED	COOLDOWN FINAL MEASURED <105°F	REMARKS
		250°F (245°-255°)	350°F (345°-355°)	450°F (445°-455°)	557°F (553°-560°)		
LINE TEMP[1]							
INITIAL/ DATE	/	/	/	/	/		/

1 FOR INFO ONLY

Attachment 10
(Page 46 of 72)

PIPE RUPTURE PROTECTIVE DEVICES MAXIMUM PREDICTED THERMAL MOVEMENTS ACCEPTANCE CRITERIA AND DATA READINGS

Date _____

THERMAL EXPANSION TEST RESULTS/PROTECTION DEVICE NUMBER: ___PD00-21____

REF. DWG. NO. ___48W1700-21____ / BLDG. ___I.C.___ / EL. ___732___ / COORD. ___AZ 148° 80'___

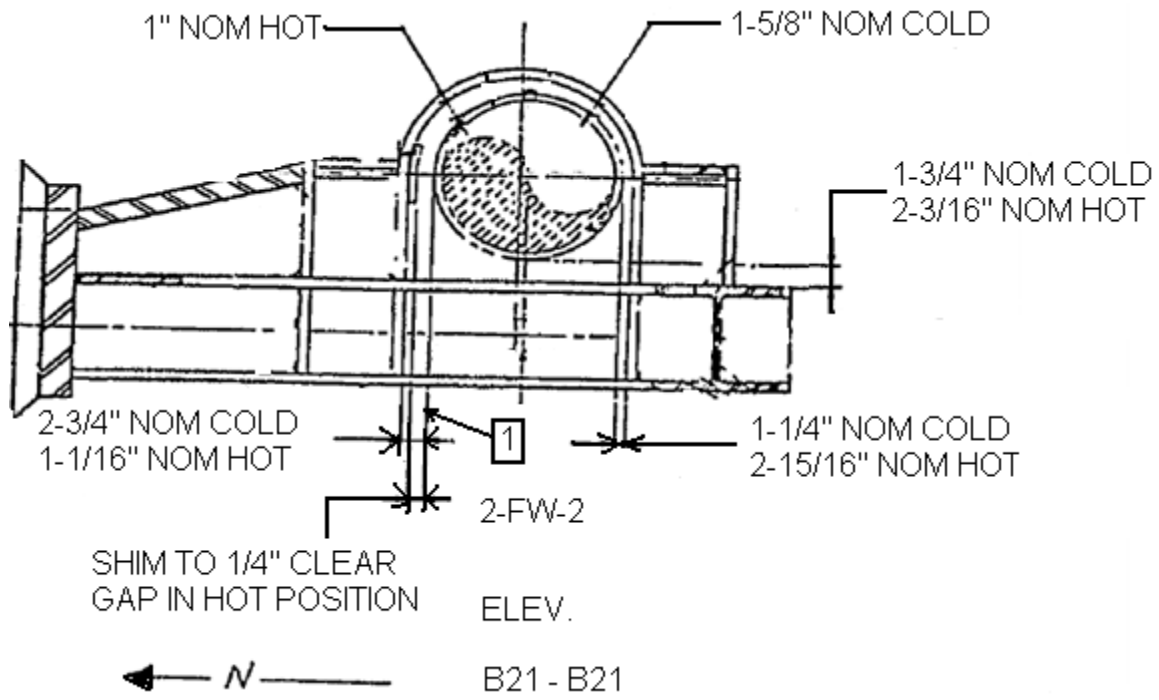

MEASURE POINT	BASE LINE MEASURE AT AMBIENT <105°F	OBSERVED			MEASURED	COOLDOWN FINAL MEASURED <105°F	REMARKS
		250°F (245°-255°)	350°F (345°-355°)	450°F (445°-455°)	557°F (553°-560°)		
LINE TEMP[1]							
INITIAL/ DATE	/	/	/	/	/		/

1 FOR INFO ONLY

Attachment 10
(Page 47 of 72)

PIPE RUPTURE PROTECTIVE DEVICES MAXIMUM PREDICTED THERMAL MOVEMENTS ACCEPTANCE CRITERIA AND DATA READINGS

Date _____

THERMAL EXPANSION TEST RESULTS/PROTECTION DEVICE NUMBER: ___PD00-34____

REF. DWG. NO. ___48W1700-20____ / BLDG. ___I.C.___ / EL. ___727___ / COORD. ___AZ 147°___

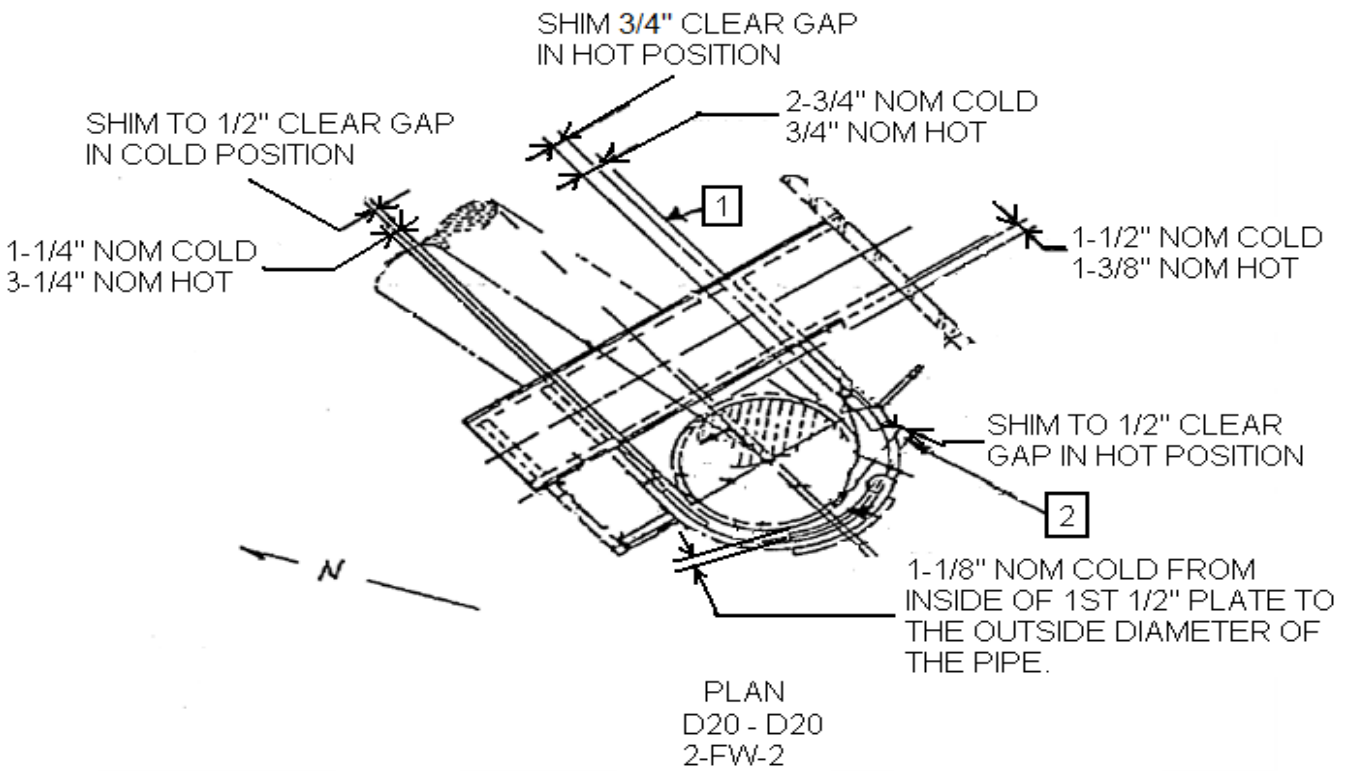

MEASURE POINT	BASE LINE MEASURE AT AMBIENT <105°F	OBSERVED			MEASURED	COOLDOWN FINAL MEASURED <105°F	REMARKS
		250°F (245°-255°)	350°F (345°-355°)	450°F (445°-455°)	557°F (553°-560°)		
LINE TEMP[1]							
INITIAL/ DATE	/	/	/	/	/		/

1 FOR INFO ONLY

Attachment 10
(Page 48 of 72)

PIPE RUPTURE PROTECTIVE DEVICES MAXIMUM PREDICTED THERMAL MOVEMENTS ACCEPTANCE CRITERIA AND DATA READINGS

Date _____

THE FOLLOWING PIPE RUPTURE PROTECTIVE DEVICES ARE LOCATED ON THE MAIN FEEDWATER LINE LOOP 3

THERMAL EXPANSION TEST RESULTS/PROTECTION DEVICE NUMBER: ___PD00-23_____

REF. DWG. NO. ___48W1700-22_____ / BLDG. ___I.C.___ / EL. ___729'-9"___ / COORD. ___AZ 190°___

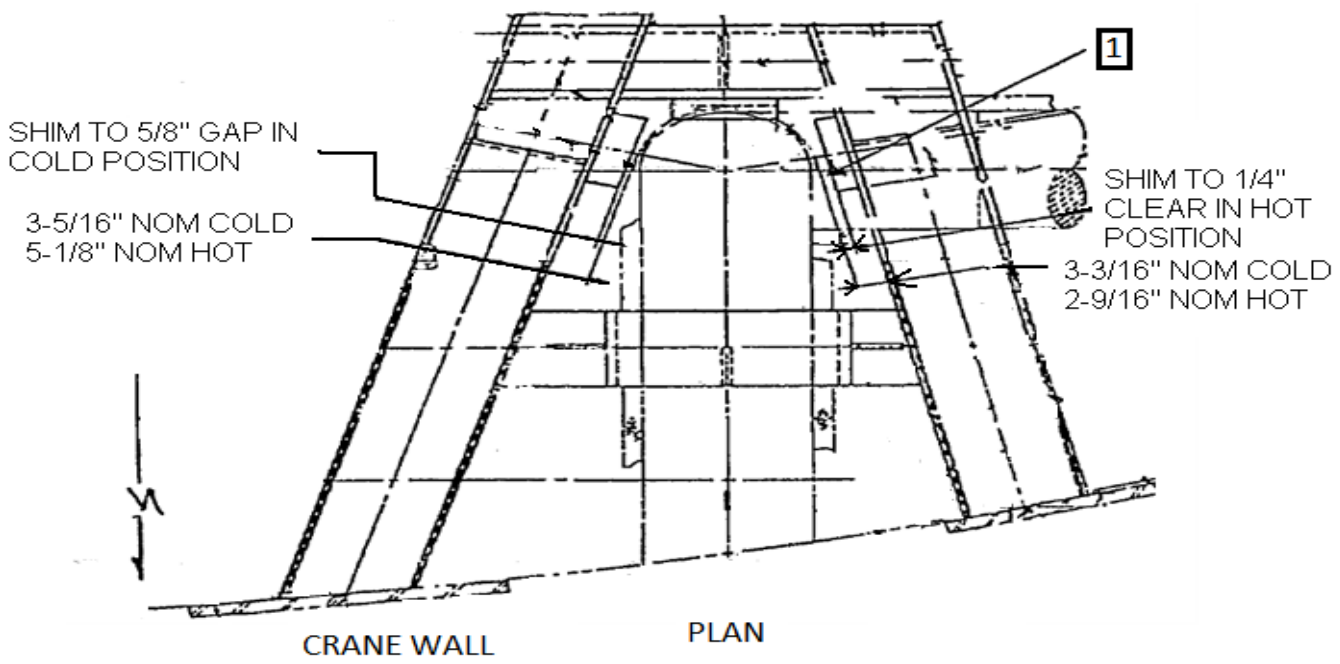

MEASURE POINT	BASE LINE MEASURE AT AMBIENT <105°F	OBSERVED			MEASURED	COOLDOWN FINAL MEASURED <105°F	REMARKS
		250°F (245°-255°)	350°F (345°-355°)	450°F (445°-455°)	557°F (553°-560°)		
LINE TEMP[1]							
INITIAL/ DATE	/	/	/	/	/		/

1 FOR INFO ONLY

Attachment 10
(Page 49 of 72)

PIPE RUPTURE PROTECTIVE DEVICES MAXIMUM PREDICTED THERMAL MOVEMENTS ACCEPTANCE CRITERIA AND DATA READINGS

Date _____

THERMAL EXPANSION TEST RESULTS/PROTECTION DEVICE NUMBER: ___PD00-25____

REF. DWG. NO. ___48W1700-23____ / BLDG. ___I.C.___ / EL. ___730'___ / COORD. ___AZ 206°____

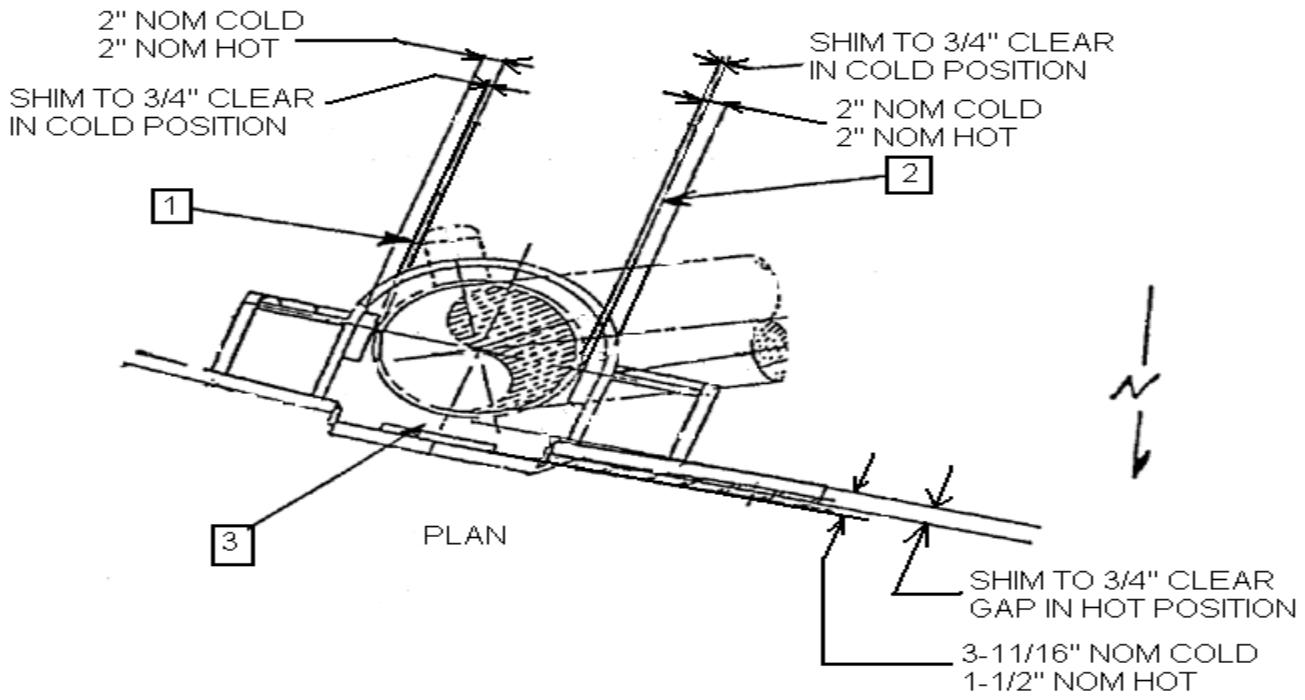

MEASURE POINT	BASE LINE MEASURE AT AMBIENT <105°F	OBSERVED			MEASURED	COOLDOWN FINAL MEASURED <105°F	REMARKS
		250°F (245°-255°)	350°F (345°-355°)	450°F (445°-455°)	557°F (553°-560°)		
LINE TEMP[1]							
INITIAL/ DATE	/	/	/	/	/		/

1 FOR INFO ONLY

Attachment 10
(Page 50 of 72)

PIPE RUPTURE PROTECTIVE DEVICES MAXIMUM PREDICTED THERMAL MOVEMENTS ACCEPTANCE CRITERIA AND DATA READINGS

Date _____

THERMAL EXPANSION TEST RESULTS/PROTECTION DEVICE NUMBER: ___PD00-26____

REF. DWG. NO. ___48W1700-24____ / BLDG. ___I.C.___ / EL. ___732___ / COORD. ___AZ 206°___

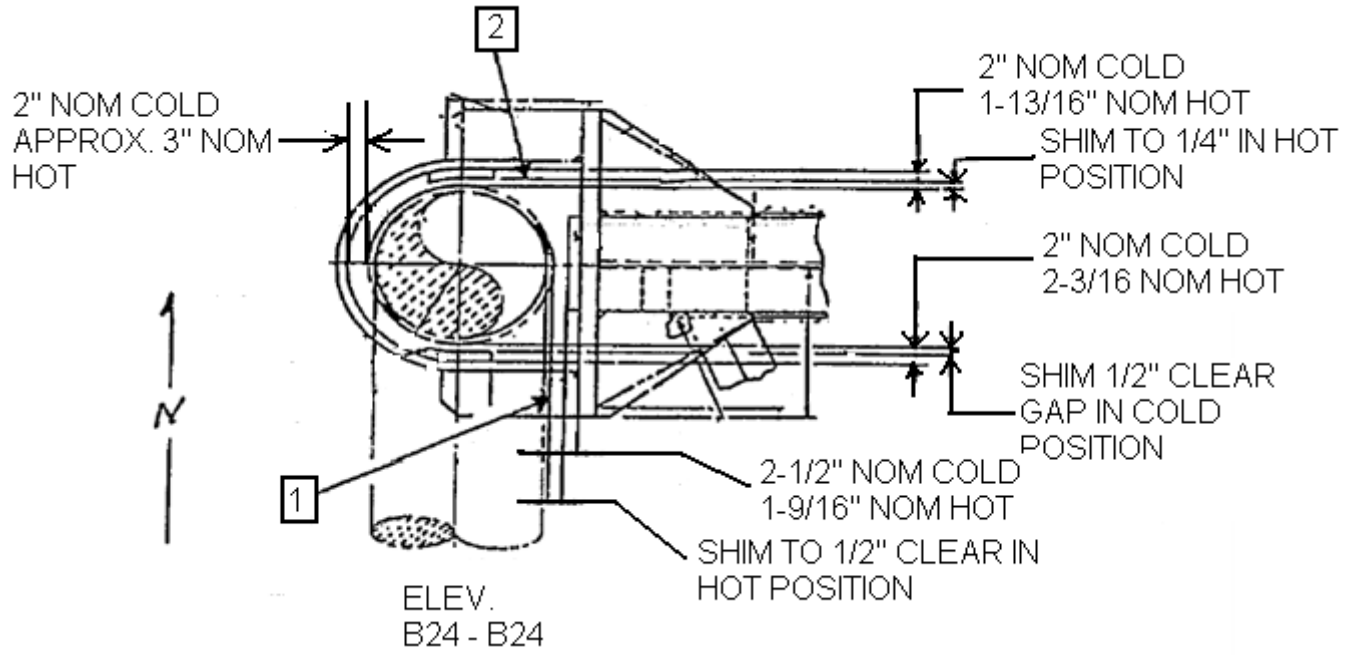

MEASURE POINT	BASE LINE MEASURE AT AMBIENT <105°F	OBSERVED			MEASURED	COOLDOWN FINAL MEASURED <105°F	REMARKS
		250°F (245°-255°)	350°F (345°-355°)	450°F (445°-455°)	557°F (553°-560°)		
LINE TEMP[1]							
INITIAL/ DATE	/	/	/	/	/		/

1 FOR INFO ONLY

Attachment 10
(Page 51 of 72)

PIPE RUPTURE PROTECTIVE DEVICES MAXIMUM PREDICTED THERMAL MOVEMENTS ACCEPTANCE CRITERIA AND DATA READINGS

Date _____

THE FOLLOWING PIPE RUPTURE PROTECTIVE DEVICES ARE LOCATED ON THE MAIN FEEDWATER LINE LOOP 4

THERMAL EXPANSION TEST RESULTS/PROTECTION DEVICE NUMBER: ___PD00-28____

REF. DWG. NO. ___48W1700-25___ / BLDG. ___I.C.___ / EL. ___729'-9"___ / COORD. ___AZ 348°___

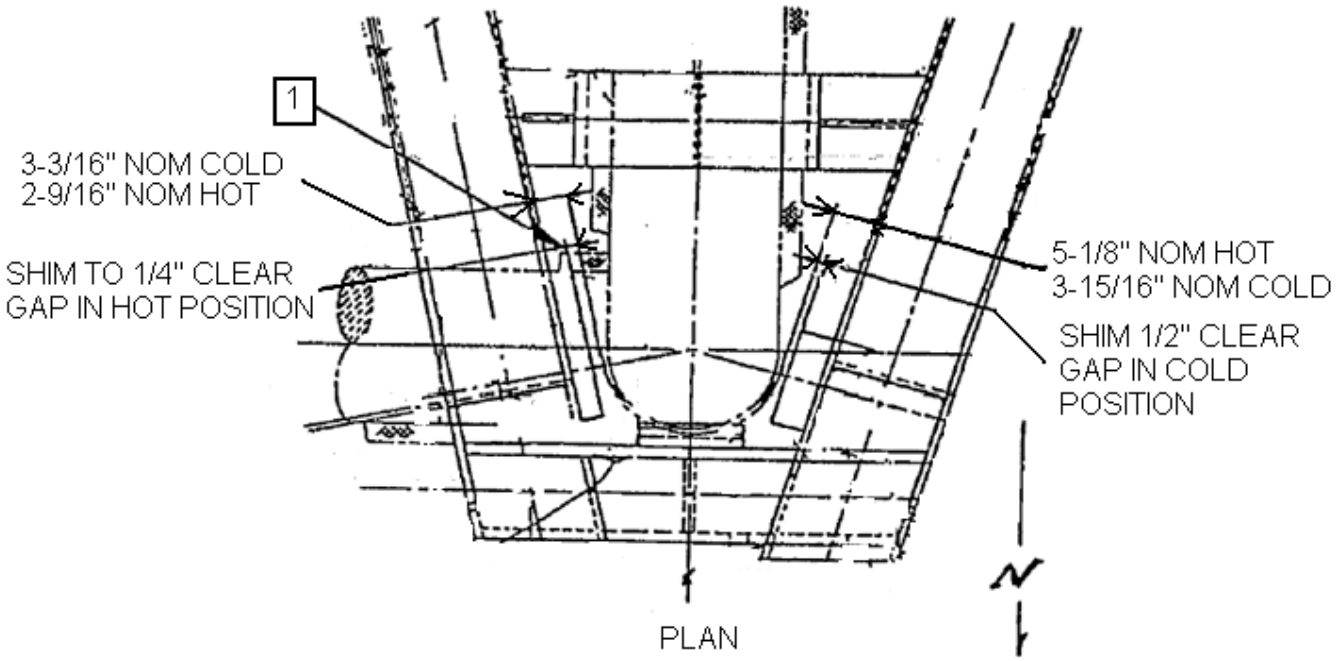

MEASURE POINT	BASE LINE MEASURE AT AMBIENT <105°F	OBSERVED			MEASURED	COOLDOWN FINAL MEASURED <105°F	REMARKS
		250°F (245°-255°)	350°F (345°-355°)	450°F (445°-455°)	557°F (553°-560°)		
LINE TEMP[1]							
INITIAL/ DATE	/	/	/	/	/		/

1 FOR INFO ONLY

Attachment 10
(Page 52 of 72)

PIPE RUPTURE PROTECTIVE DEVICES MAXIMUM PREDICTED THERMAL MOVEMENTS ACCEPTANCE CRITERIA AND DATA READINGS

Date _____

THERMAL EXPANSION TEST RESULTS/PROTECTION DEVICE NUMBER: ___PD00-30____

REF. DWG. NO. ___48W1700-26____ / BLDG. ___I.C.___ / EL. ___730___ / COORD. ___AZ 333° 56'___

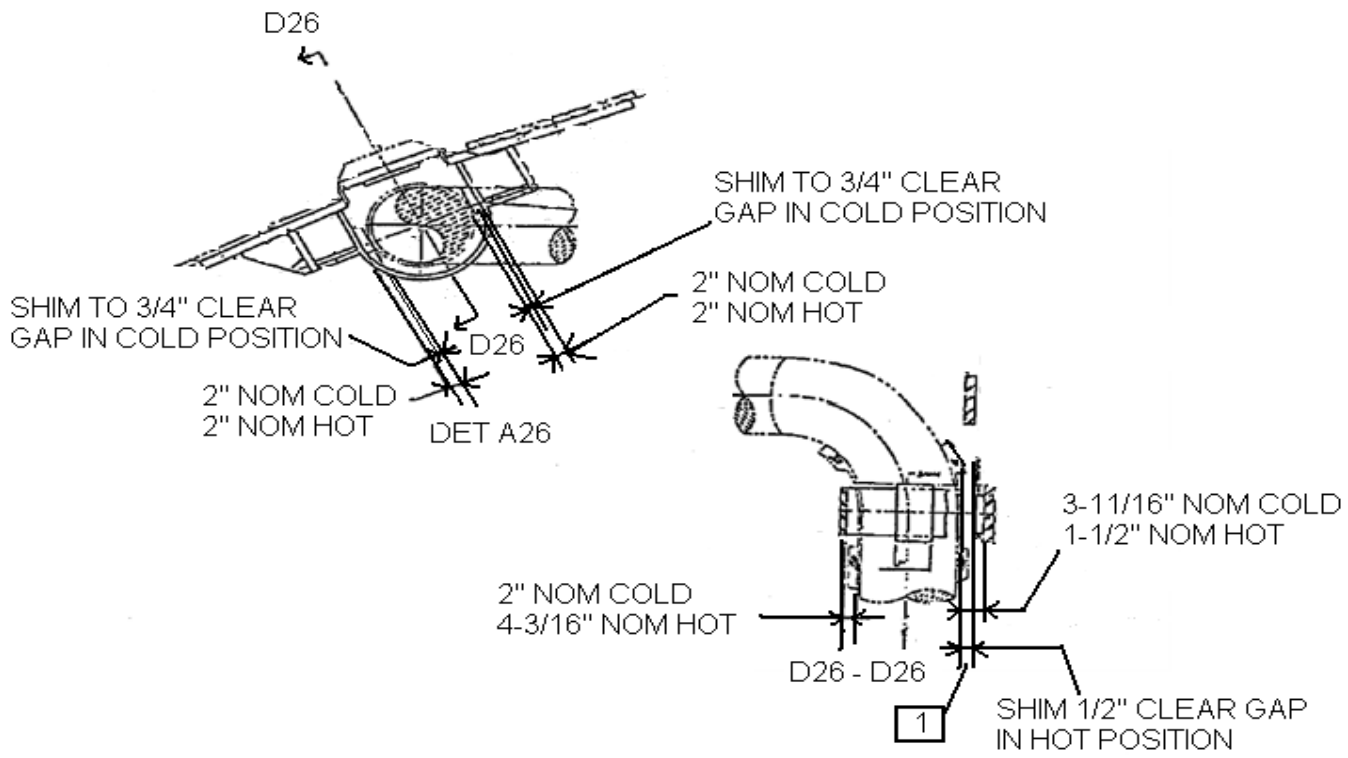

MEASURE POINT	BASE LINE MEASURE AT AMBIENT <105°F	OBSERVED			MEASURED	COOLDOWN FINAL MEASURED <105°F	REMARKS
		250°F (245°-255°)	350°F (345°-355°)	450°F (445°-455°)	557°F (553°-560°)		
LINE TEMP[1]							
INITIAL/ DATE	/	/	/	/	/		/

1 FOR INFO ONLY

Attachment 10
(Page 53 of 72)

PIPE RUPTURE PROTECTIVE DEVICES MAXIMUM PREDICTED THERMAL MOVEMENTS ACCEPTANCE CRITERIA AND DATA READINGS

Date _____

THERMAL EXPANSION TEST RESULTS/PROTECTION DEVICE NUMBER: ___PD00-31____

REF. DWG. NO. ___48W1700-27___ / BLDG. ___I.C.___ / EL. ___731___ / COORD. ___AZ 332°___

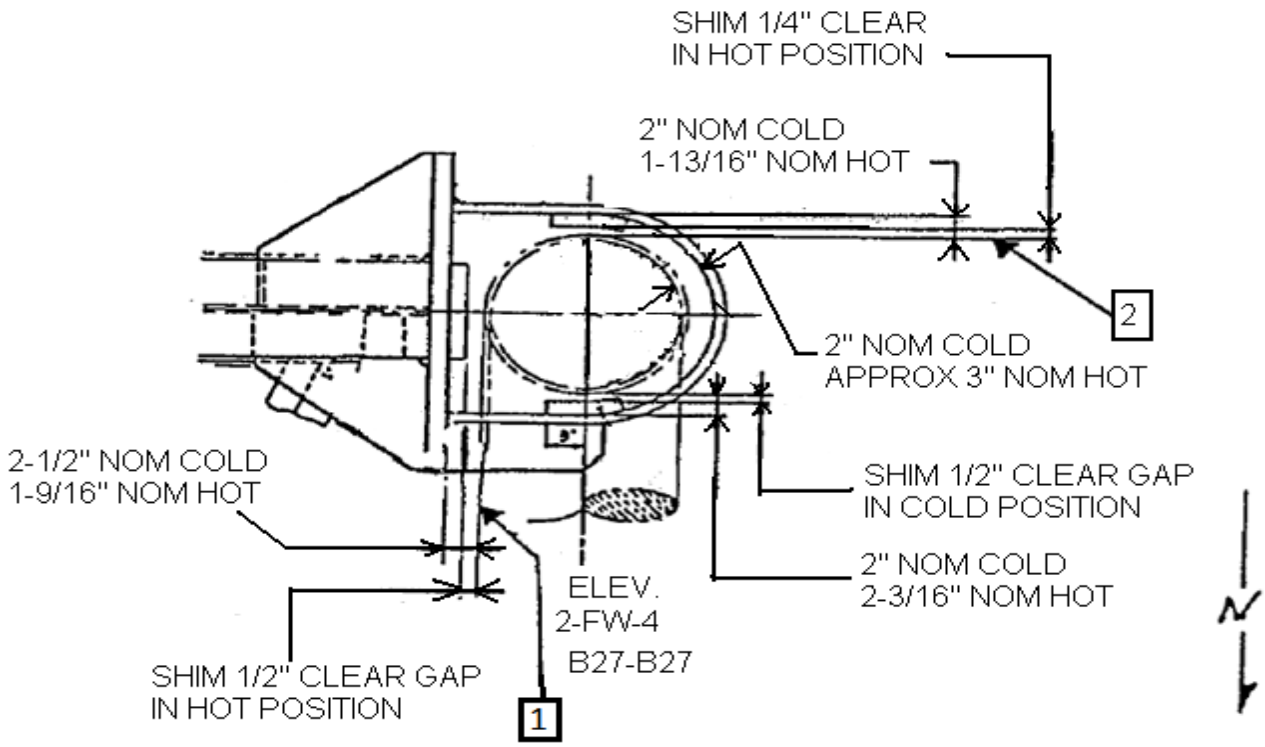

MEASURE POINT	BASE LINE MEASURE AT AMBIENT <105°F	OBSERVED			MEASURED	COOLDOWN FINAL MEASURED <105°F	REMARKS
		250°F (245°-255°)	350°F (345°-355°)	450°F (445°-455°)	557°F (553°-560°)		
LINE TEMP[1]							
INITIAL/ DATE	/	/	/	/	/		/

1 FOR INFO ONLY

Attachment 10
(Page 54 of 72)

PIPE RUPTURE PROTECTIVE DEVICES MAXIMUM PREDICTED THERMAL MOVEMENTS ACCEPTANCE CRITERIA AND DATA READINGS

Date _____

THE FOLLOWING PROTECTIVE DEVICE IS LOCATED ON THE MAIN FEEDWATER BYPASS LINE

THERMAL EXPANSION TEST RESULTS/PROTECTION DEVICE NUMBER: ___PD07-35___

REF. DWG. NO. ___48W1707-5___ / BLDG. ___SVR___ / EL. ___741'-11 1/2"__ / COORD. ___COL 12 AND "F" LINE___

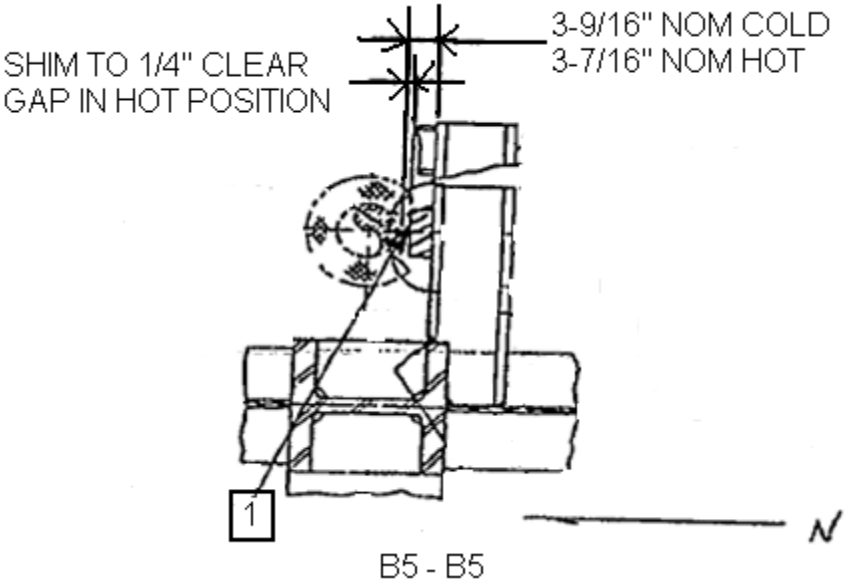

MEASURE POINT	BASE LINE MEASURE AT AMBIENT <105°F	OBSERVED			MEASURED	COOLDOWN FINAL MEASURED <105°F	REMARKS
		250°F (245°-255°)	350°F (345°-355°)	450°F (445°-455°)	557°F (553°-560°)		
LINE TEMP[1]							
INITIAL/ DATE	/	/	/	/	/		/

1 FOR INFO ONLY

Attachment 10
(Page 55 of 72)

PIPE RUPTURE PROTECTIVE DEVICES MAXIMUM PREDICTED THERMAL MOVEMENTS ACCEPTANCE CRITERIA AND DATA READINGS

Date _____

THE FOLLOWING PIPE RUPTURE PROTECTIVE DEVICES ARE LOCATED ON THE AUXILIARY FEEDWATER LINE LOOP 3

THERMAL EXPANSION TEST RESULTS/PROTECTION DEVICE NUMBER: ___PD07-31___

REF. DWG. NO. ___48W1707-12___ / BLDG. ___SVR___ / EL. ___746___ / COORD. ___COL 8-11 AND "M" LINE___

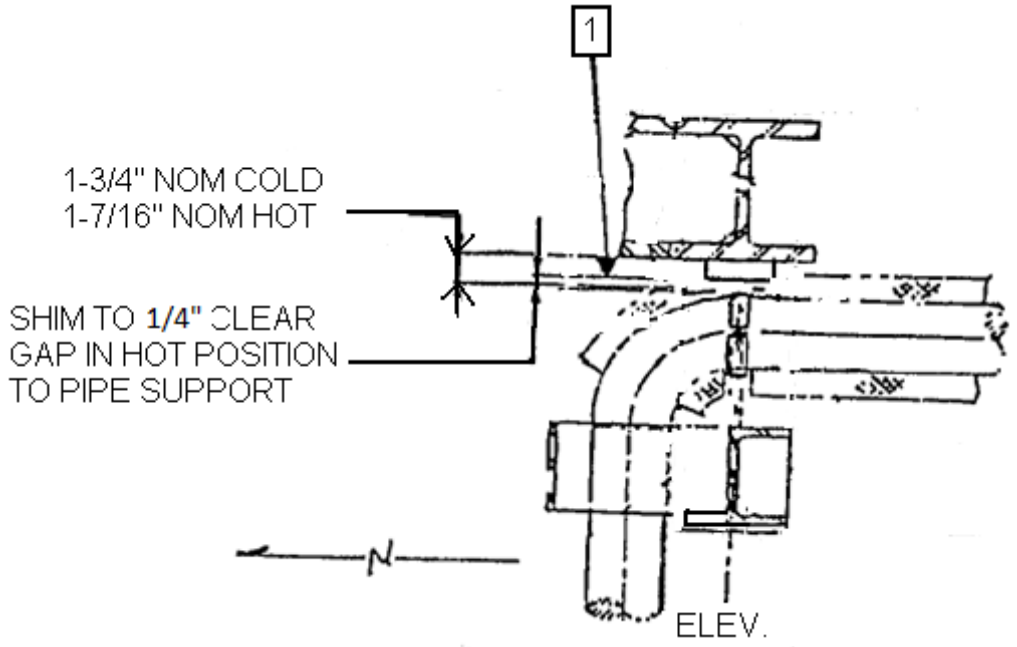

MEASURE POINT	BASE LINE MEASURE AT AMBIENT <105°F	OBSERVED			MEASURED	COOLDOWN FINAL MEASURED <105°F	REMARKS
		250°F (245°-255°)	350°F (345°-355°)	450°F (445°-455°)	557°F (553°-560°)		
LINE TEMP[1]							
INITIAL/ DATE	/	/	/	/	/		/

1 FOR INFO ONLY

Attachment 10
(Page 56 of 72)

PIPE RUPTURE PROTECTIVE DEVICES MAXIMUM PREDICTED THERMAL MOVEMENTS ACCEPTANCE CRITERIA AND DATA READINGS

Date _____

THE FOLLOWING PIPE RUPTURE PROTECTIVE DEVICES ARE LOCATED ON THE AUXILIARY FEEDWATER LINE LOOP 4

THERMAL EXPANSION TEST RESULTS/PROTECTION DEVICE NUMBER: ___PD07-38___

REF. DWG. NO. ___48W1707-12___ / BLDG. ___SVR___ / EL. ___746___ / COORD. ___COL 1-4 AND "M" LINE___

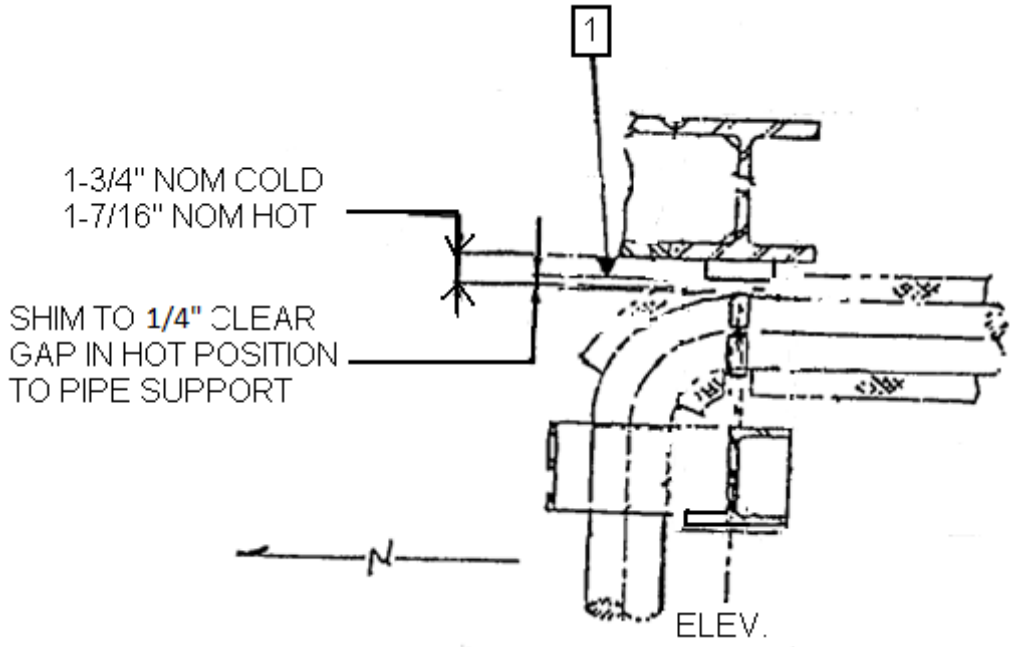

MEASURE POINT	BASE LINE MEASURE AT AMBIENT <105°F	OBSERVED			MEASURED	COOLDOWN FINAL MEASURED <105°F	REMARKS
		250°F (245°-255°)	350°F (345°-355°)	450°F (445°-455°)	557°F (553°-560°)		
LINE TEMP[1]							
INITIAL/ DATE	/	/	/	/	/		/

1 FOR INFO ONLY

Attachment 10
(Page 57 of 72)

PIPE RUPTURE PROTECTIVE DEVICES MAXIMUM PREDICTED THERMAL MOVEMENTS ACCEPTANCE CRITERIA AND DATA READINGS

Date _____

THE FOLLOWING PIPE RUPTURE PROTECTIVE DEVICES ARE LOCATED ON THE RESIDUAL HEAT REMOVAL LINE LOOP 1 HOT LEG

THERMAL EXPANSION TEST RESULTS/PROTECTION DEVICE NUMBER: ___PD01-3___

REF. DWG. NO. ___48W1701-8___ / BLDG. ___I.C.___ / EL. ___723___ / COORD. ___AZ 22°___

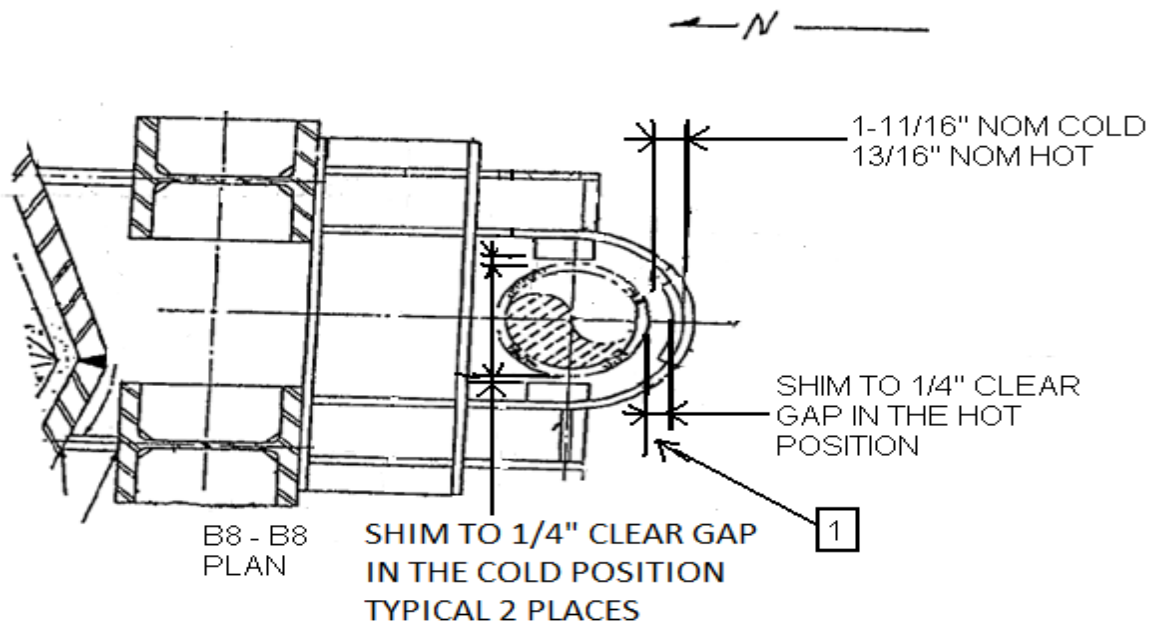

MEASURE POINT	BASE LINE MEASURE AT AMBIENT <105°F	OBSERVED			MEASURED	COOLDOWN FINAL MEASURED <105°F	REMARKS
		250°F (245°-255°)	350°F (345°-355°)	450°F (445°-455°)	557°F (553°-560°)		
LINE TEMP[1]							
INITIAL/ DATE	/	/	/	/	/		/

1 FOR INFO ONLY

Attachment 10
(Page 58 of 72)

PIPE RUPTURE PROTECTIVE DEVICES MAXIMUM PREDICTED THERMAL MOVEMENTS ACCEPTANCE CRITERIA AND DATA READINGS

Date _____

THERMAL EXPANSION TEST RESULTS/PROTECTION DEVICE NUMBER: ___PD01-4___

REF. DWG. NO. ___48W1701-8___ / BLDG. ___I.C.___ / EL. ___725___ / COORD. ___AZ 22°___

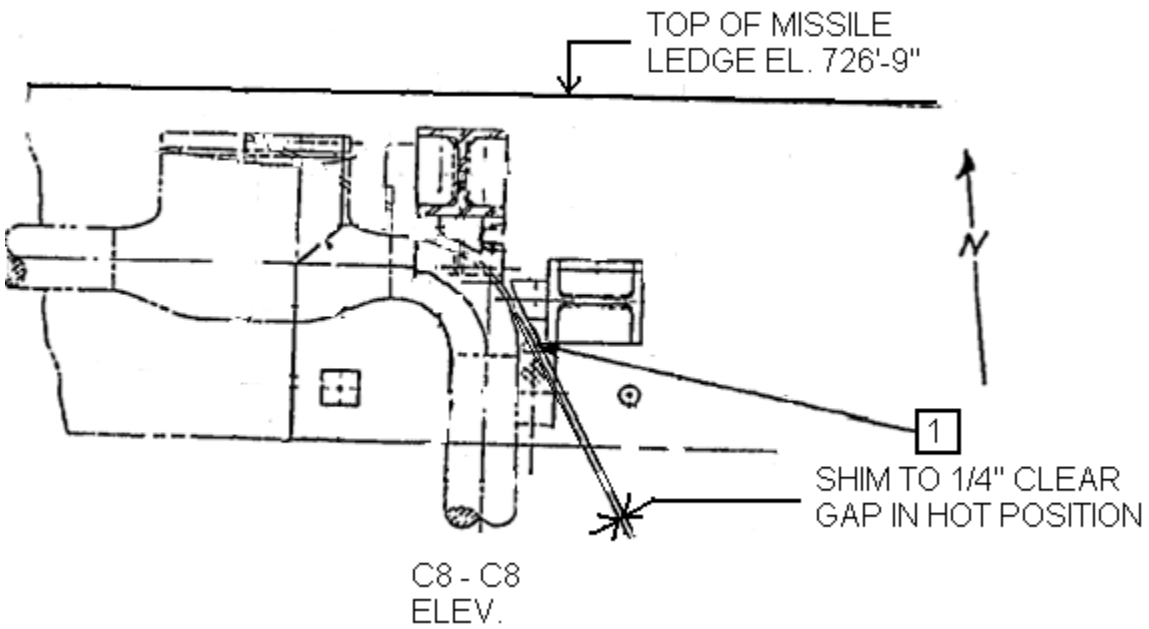

MEASURE POINT	BASE LINE MEASURE AT AMBIENT <105°F	OBSERVED			MEASURED	COOLDOWN FINAL MEASURED <105°F	REMARKS
		250°F (245°-255°)	350°F (345°-355°)	450°F (445°-455°)	557°F (553°-560°)		
LINE TEMP[1]							
INITIAL/ DATE	/	/	/	/	/		/

1 FOR INFO ONLY

Attachment 10
(Page 59 of 72)

PIPE RUPTURE PROTECTIVE DEVICES MAXIMUM PREDICTED THERMAL MOVEMENTS ACCEPTANCE CRITERIA AND DATA READINGS

Date _____

THERMAL EXPANSION TEST RESULTS/PROTECTION DEVICE NUMBER: ___PD01-5___

REF. DWG. NO. ___48W1701-8___ / BLDG. ___I.C.___ / EL. ___725___ / COORD. ___AZ 22°___

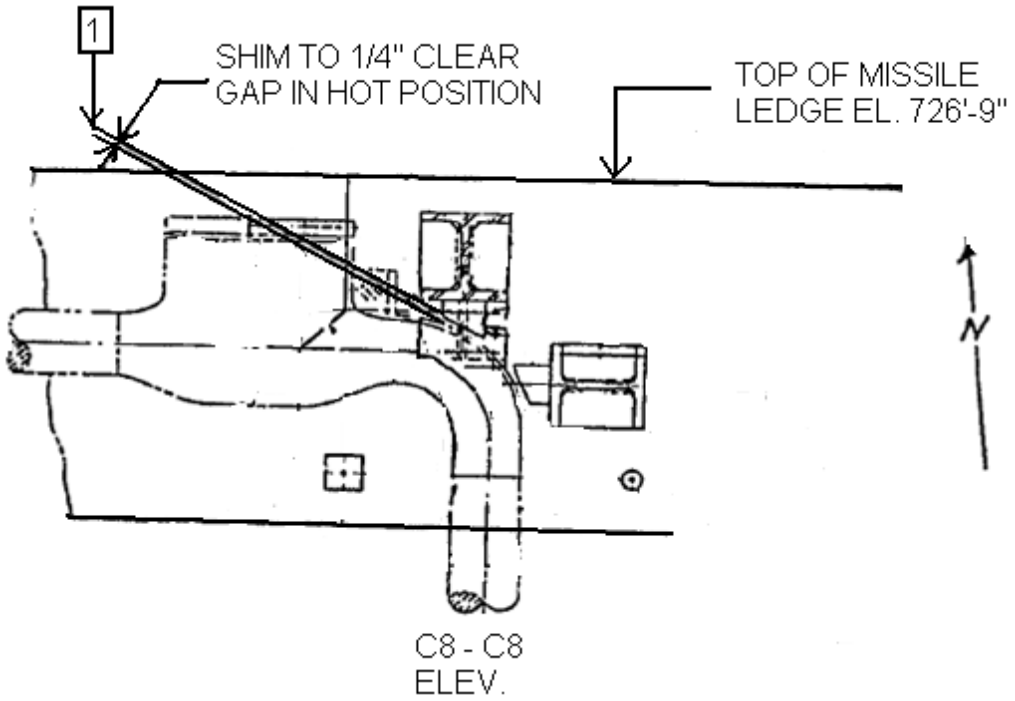

MEASURE POINT	BASE LINE MEASURE AT AMBIENT	OBSERVED			MEASURED	COOLDOWN FINAL MEASURED	REMARKS
		250°F	350°F	450°F	557°F		
LINE TEMP[1]							
INITIAL/DATE	/	/	/	/	/	/	/

1 FOR INFO ONLY

Attachment 10
(Page 60 of 72)

PIPE RUPTURE PROTECTIVE DEVICES MAXIMUM PREDICTED THERMAL MOVEMENTS ACCEPTANCE CRITERIA AND DATA READINGS

Date _____

THERMAL EXPANSION TEST RESULTS/PROTECTION DEVICE NUMBER: ___PD01-8___

REF. DWG. NO. ___48W1701-11___ / BLDG. ___I.C.___ / EL. ___724___ / COORD. ___AZ 202°___

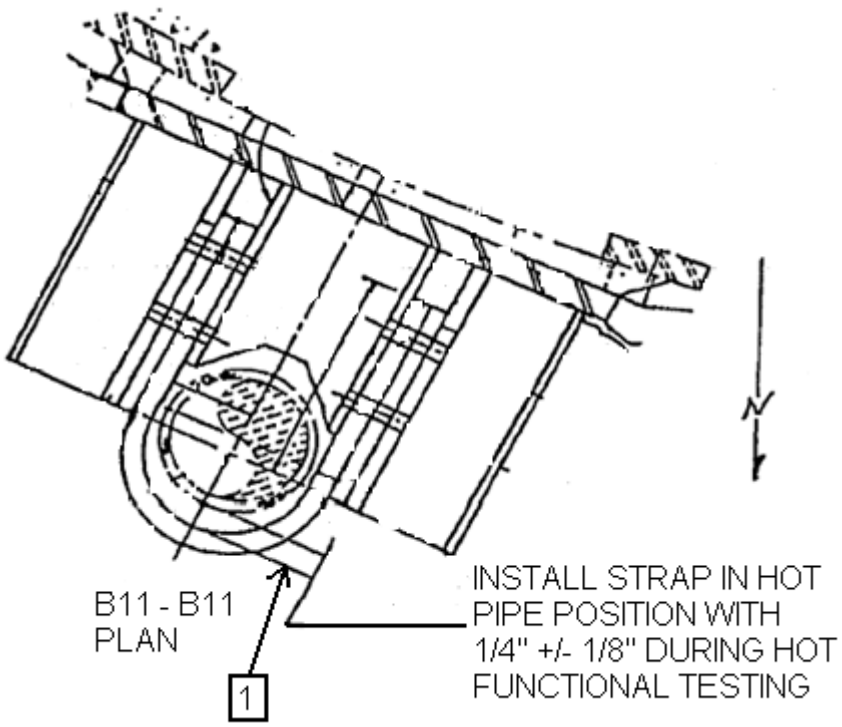

MEASURE POINT	BASE LINE MEASURE AT AMBIENT <105°F	OBSERVED			MEASURED	COOLDOWN FINAL MEASURED <105°F	REMARKS
		250°F (245°-255°)	350°F (345°-355°)	450°F (445°-455°)	557°F (553°-560°)		
LINE TEMP[1]							
INITIAL/ DATE	/	/	/	/	/		/

1 FOR INFO ONLY

Attachment 10
(Page 61 of 72)

PIPE RUPTURE PROTECTIVE DEVICES MAXIMUM PREDICTED THERMAL MOVEMENTS ACCEPTANCE CRITERIA AND DATA READINGS

Date _____

THERMAL EXPANSION TEST RESULTS/PROTECTION DEVICE NUMBER: ___PD01-9___

REF. DWG. NO. ___48W1701-11___ / BLDG. ___I.C.___ / EL. ___725___ / COORD. ___AZ 202°__

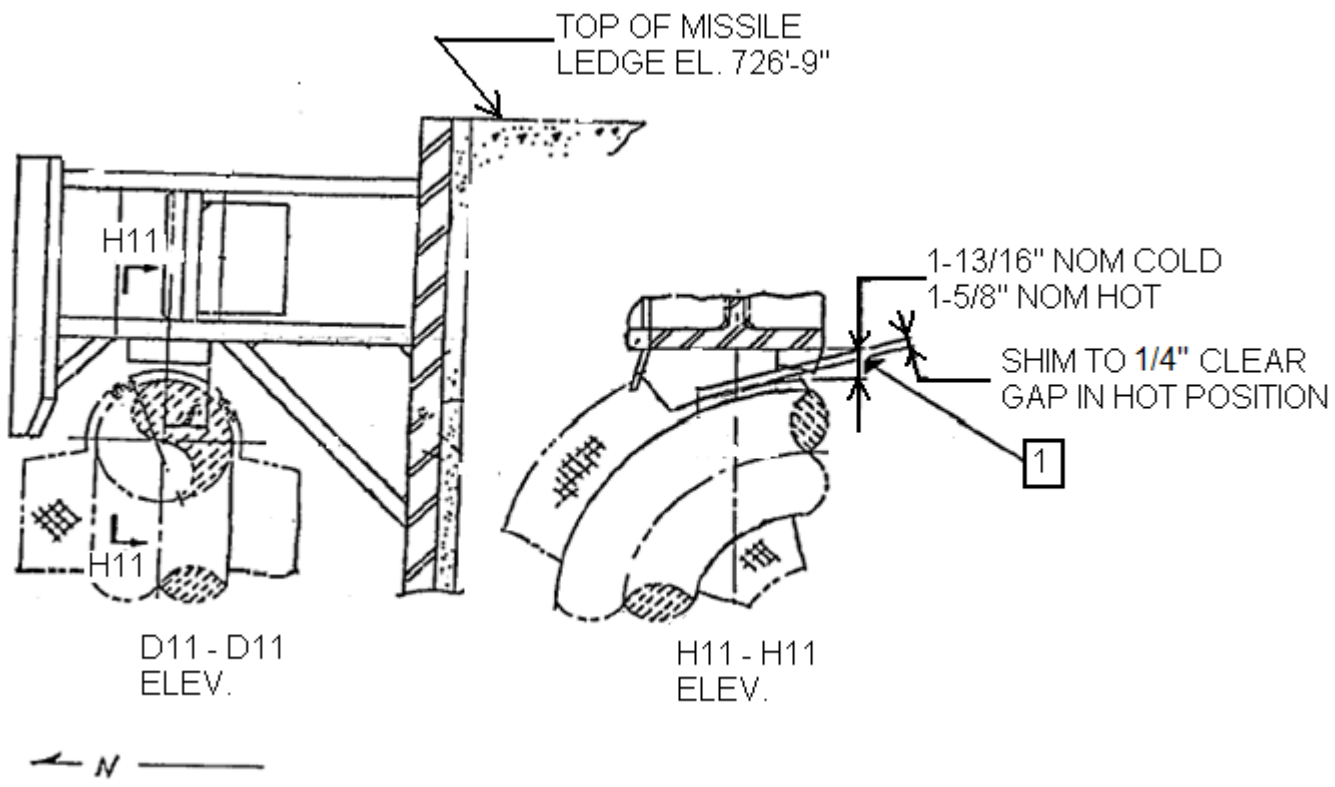

MEASURE POINT	BASE LINE MEASURE AT AMBIENT	OBSERVED			MEASURED	COOLDOWN FINAL MEASURED	REMARKS
		250°F	350°F	450°F	557°F		
LINE TEMP[1]							
INITIAL/DATE	/	/	/	/	/	/	/

1 FOR INFO ONLY

Attachment 10
(Page 62 of 72)

PIPE RUPTURE PROTECTIVE DEVICES MAXIMUM PREDICTED THERMAL MOVEMENTS ACCEPTANCE CRITERIA AND DATA READINGS

Date _____

THE FOLLOWING PIPE RUPTURE PROTECTIVE DEVICES ARE LOCATED ON THE SAFETY INJECTION LINE LOOP 1 COLD LEG

THERMAL EXPANSION TEST RESULTS/PROTECTION DEVICE NUMBER: ___PD01-10___

REF. DWG. NO. ___48W1701-9____ / BLDG. ___I.C.___ / EL. ___720___ / COORD. ___AZ 63°___

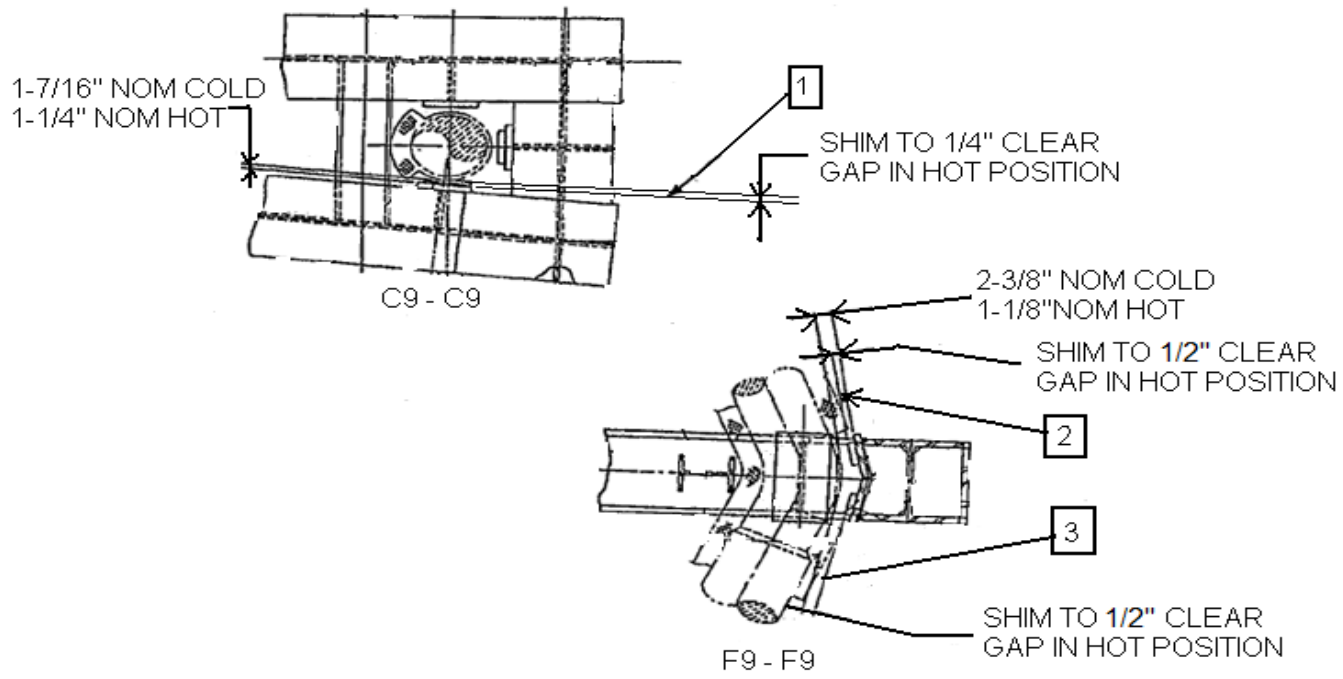

MEASURE POINT	BASE LINE MEASURE AT AMBIENT <105°F	OBSERVED			MEASURED	COOLDOWN FINAL MEASURED <105°F	REMARKS
		250°F (245°-255°)	350°F (345°-355°)	450°F (445°-455°)	557°F (553°-560°)		
LINE TEMP[1]							
INITIAL/ DATE	/	/	/	/	/		/

1 FOR INFO ONLY

Attachment 10
(Page 63 of 72)

PIPE RUPTURE PROTECTIVE DEVICES MAXIMUM PREDICTED THERMAL MOVEMENTS ACCEPTANCE CRITERIA AND DATA READINGS

Date _____

THERMAL EXPANSION TEST RESULTS/PROTECTION DEVICE NUMBER: ___PD01-11___

REF. DWG. NO. ___48W1701-9___ / BLDG. ___I.C.___ / EL. ___724__ / COORD. ___AZ 55°__

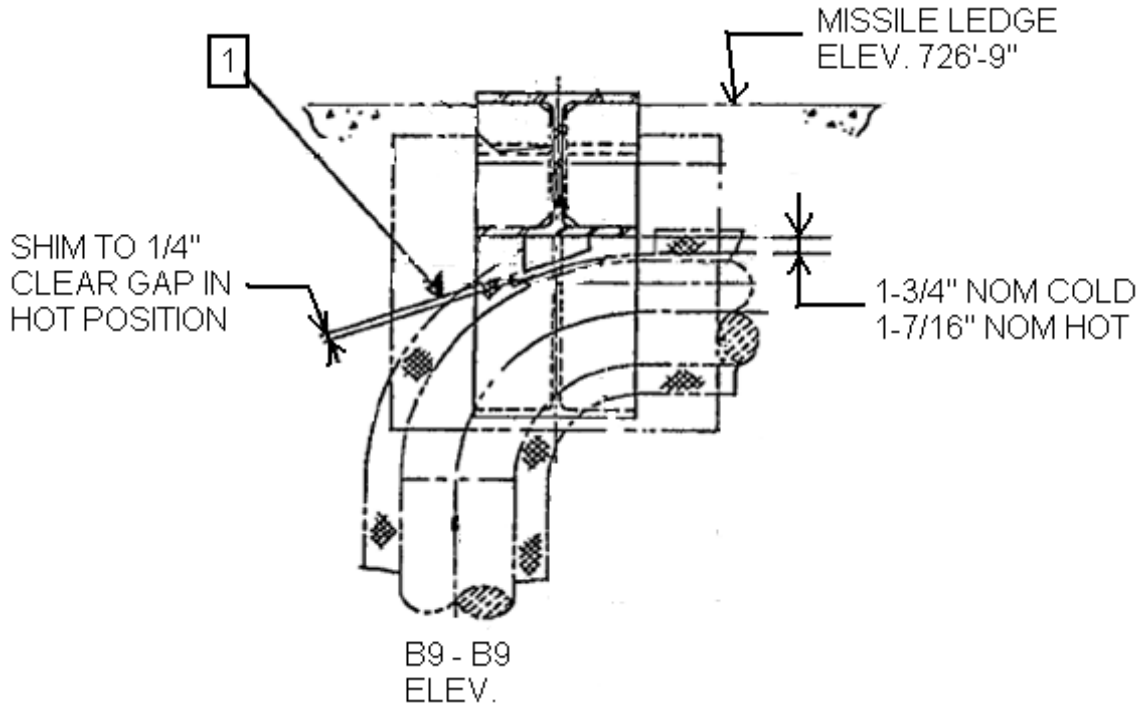

MEASURE POINT	BASE LINE MEASURE AT AMBIENT <105°F	OBSERVED			MEASURED	COOLDOWN FINAL MEASURED <105°F	REMARKS
		250°F (245°-255°)	350°F (345°-355°)	450°F (445°-455°)	557°F (553°-560°)		
LINE TEMP[1]							
INITIAL/ DATE	/	/	/	/	/		/

1 FOR INFO ONLY

Attachment 10
(Page 64 of 72)

PIPE RUPTURE PROTECTIVE DEVICES MAXIMUM PREDICTED THERMAL MOVEMENTS ACCEPTANCE CRITERIA AND DATA READINGS

Date _____

THE FOLLOWING PIPE RUPTURE PROTECTIVE DEVICES ARE LOCATED ON THE SAFETY INJECTION LINE LOOP 3 COLD LEG

THERMAL EXPANSION TEST RESULTS/PROTECTION DEVICE NUMBER: ___PD01-12___

REF. DWG. NO. ___48W1701-13___ / BLDG. ___I.C.___ / EL. ___725___ / COORD. ___AZ 121°__

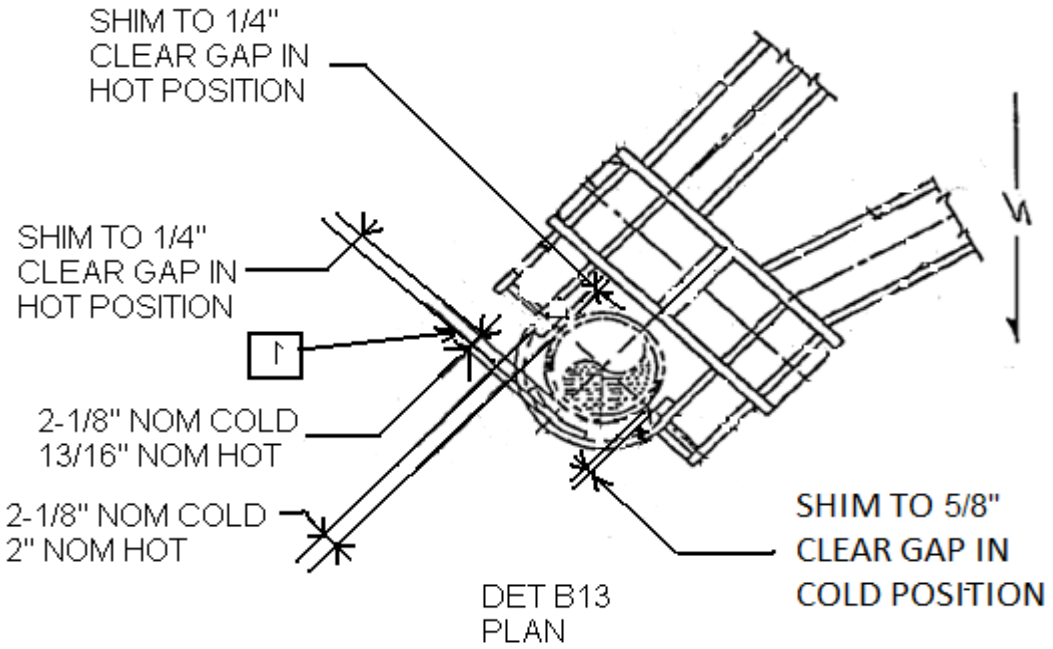

MEASURE POINT	BASE LINE MEASURE AT AMBIENT <105°F	OBSERVED			MEASURED	COOLDOWN FINAL MEASURED <105°F	REMARKS
		250°F (245°-255°)	350°F (345°-355°)	450°F (445°-455°)	557°F (553°-560°)		
LINE TEMP[1]							
INITIAL/ DATE	/	/	/	/	/		/

1 FOR INFO ONLY

Attachment 10
(Page 65 of 72)

PIPE RUPTURE PROTECTIVE DEVICES MAXIMUM PREDICTED THERMAL MOVEMENTS ACCEPTANCE CRITERIA AND DATA READINGS

Date _____

THERMAL EXPANSION TEST RESULTS/PROTECTION DEVICE NUMBER: ___PD01-13___

REF. DWG. NO. ___48W1701-13___ / BLDG. ___I.C.___ / EL. ___725__ / COORD. ___AZ 121°___

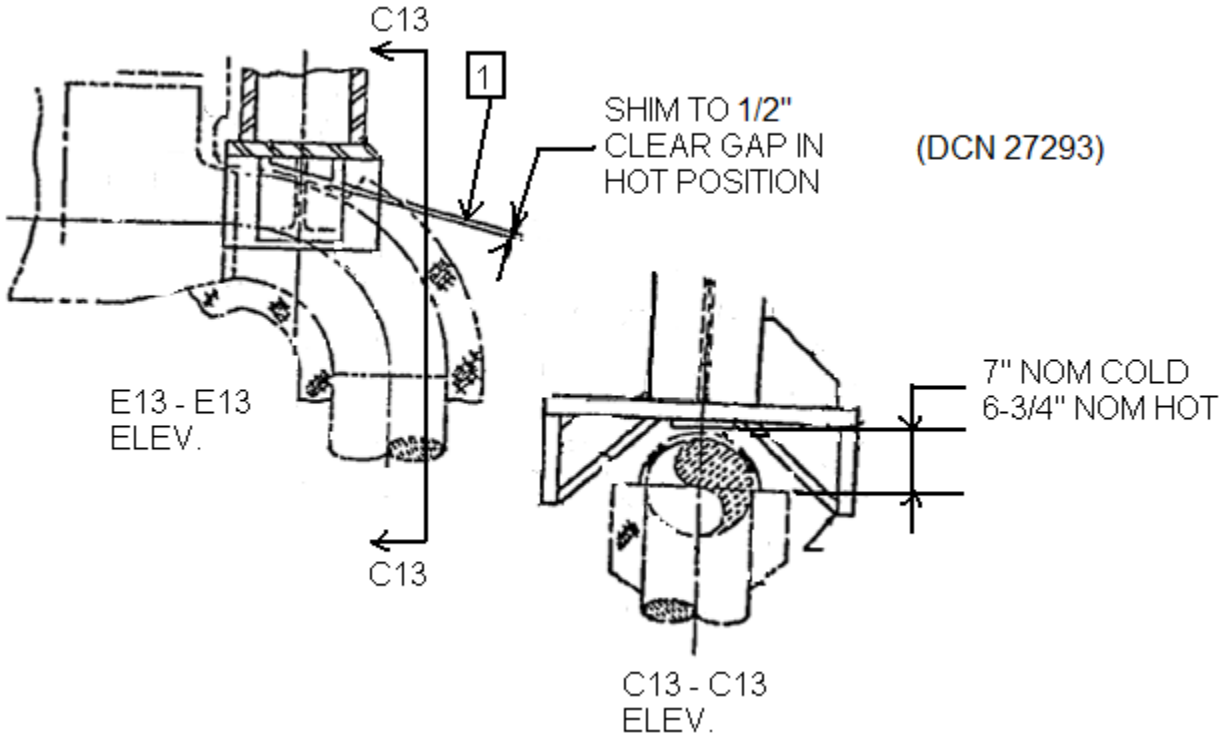

MEASURE POINT	BASE LINE MEASURE AT AMBIENT <105°F	OBSERVED			MEASURED	COOLDOWN FINAL MEASURED <105°F	REMARKS
		250°F (245°-255°)	350°F (345°-355°)	450°F (445°-455°)	557°F (553°-560°)		
LINE TEMP[1]							
INITIAL/ DATE	/	/	/	/	/		/

1 FOR INFO ONLY

Attachment 10
(Page 66 of 72)

PIPE RUPTURE PROTECTIVE DEVICES MAXIMUM PREDICTED THERMAL MOVEMENTS ACCEPTANCE CRITERIA AND DATA READINGS

Date _____

THERMAL EXPANSION TEST RESULTS/PROTECTION DEVICE NUMBER: ___PD01-14___

REF. DWG. NO. ___48W1701-15___ / BLDG. ___I.C.___ / EL. ___723___ / COORD. ___AZ 220°___

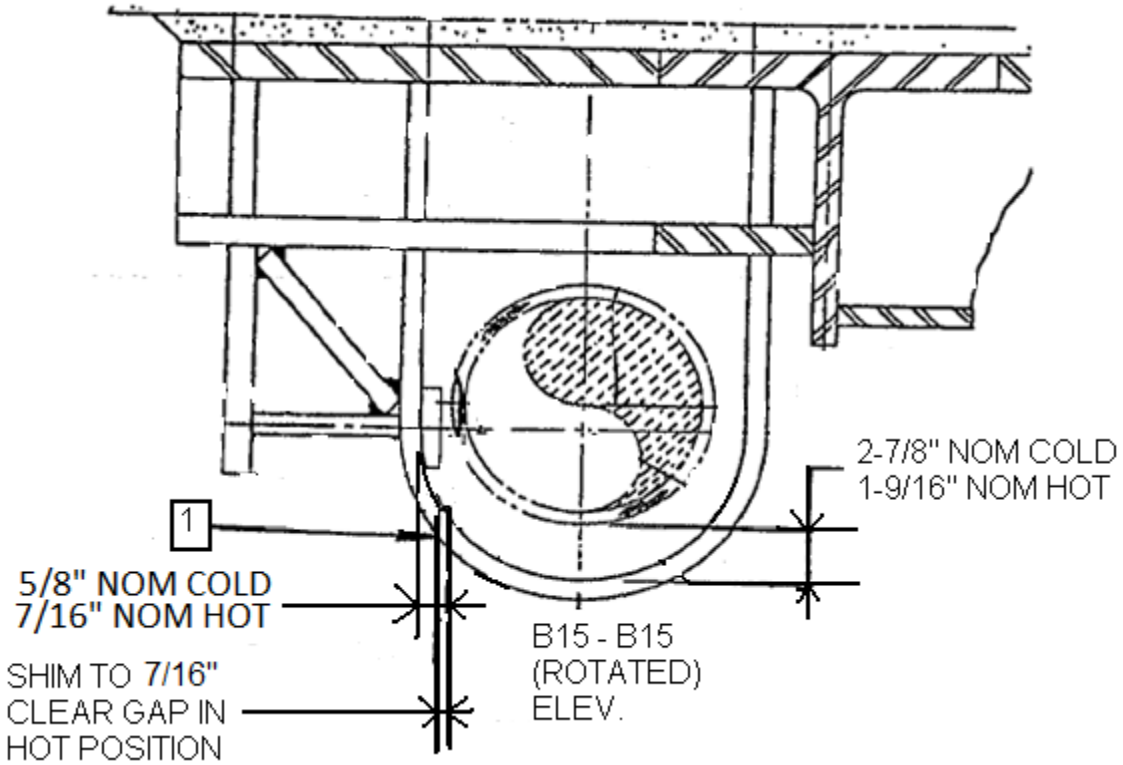

MEASURE POINT	BASE LINE MEASURE AT AMBIENT <105°F	OBSERVED			MEASURED	COOLDOWN FINAL MEASURED <105°F	REMARKS
		250°F (245°-255°)	350°F (345°-355°)	450°F (445°-455°)	557°F (553°-560°)		
LINE TEMP[1]							
INITIAL/ DATE	/	/	/	/	/		/

1 FOR INFO ONLY

Attachment 10
(Page 67 of 72)

PIPE RUPTURE PROTECTIVE DEVICES MAXIMUM PREDICTED THERMAL MOVEMENTS ACCEPTANCE CRITERIA AND DATA READINGS

Date _____

THERMAL EXPANSION TEST RESULTS/PROTECTION DEVICE NUMBER: ___PD01-15___

REF. DWG. NO. ___48W1701-15___ / BLDG. ___I.C.___ / EL. ___725___ / COORD. ___AZ 220°__

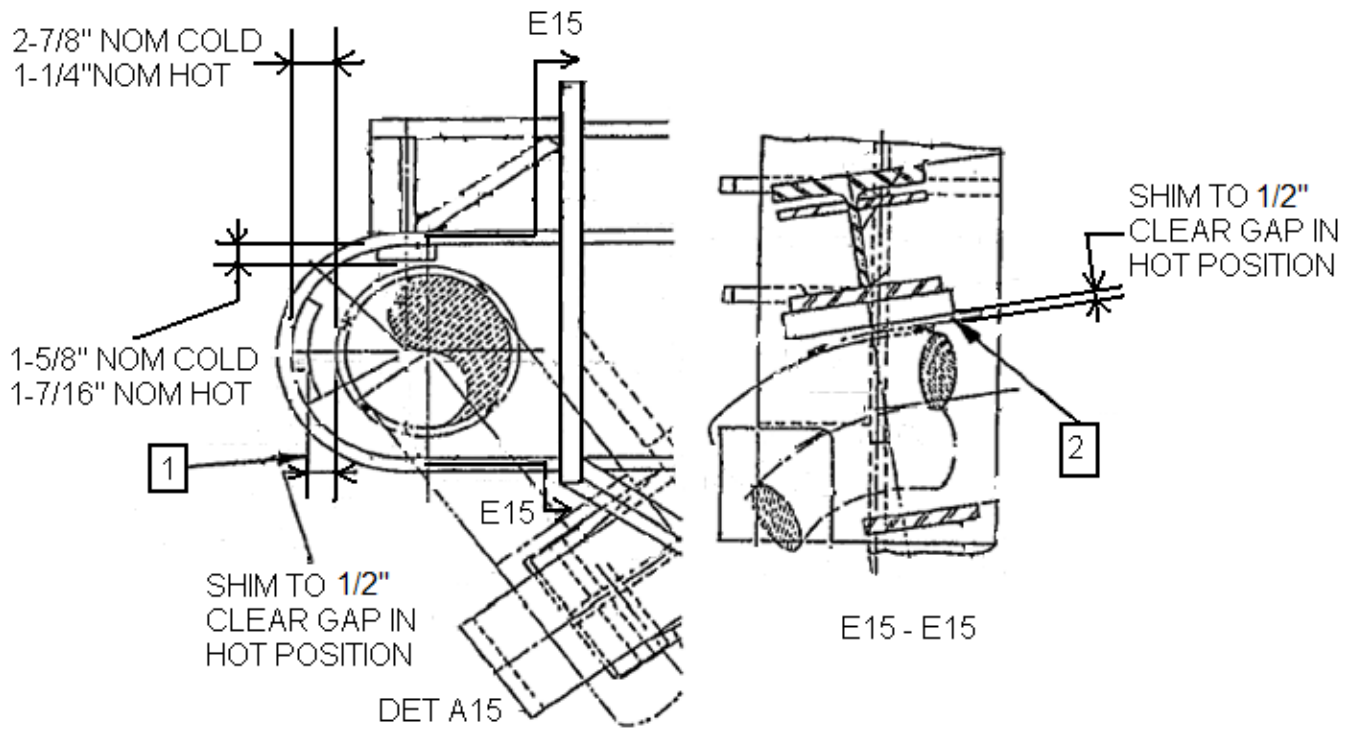

MEASURE POINT	BASE LINE MEASURE AT AMBIENT <105°F	OBSERVED			MEASURED	COOLDOWN FINAL MEASURED <105°F	REMARKS
		250°F (245°-255°)	350°F (345°-355°)	450°F (445°-455°)	557°F (553°-560°)		
LINE TEMP[1]							
INITIAL/ DATE	/	/	/	/	/		/

1 FOR INFO ONLY

Attachment 10
(Page 68 of 72)

PIPE RUPTURE PROTECTIVE DEVICES MAXIMUM PREDICTED THERMAL MOVEMENTS ACCEPTANCE CRITERIA AND DATA READINGS

Date _____

THE FOLLOWING PIPE RUPTURE PROTECTIVE DEVICES ARE LOCATED ON THE PRESSURIZER SURGE LINE LOOP 2 HOT LOOP

THERMAL EXPANSION TEST RESULTS/PROTECTION DEVICE NUMBER: ___PD03-6___

REF. DWG. NO. ___48W1703-5___ / BLDG. ___I.C.__ / EL. ___722___ / COORD. ___AZ 89°___

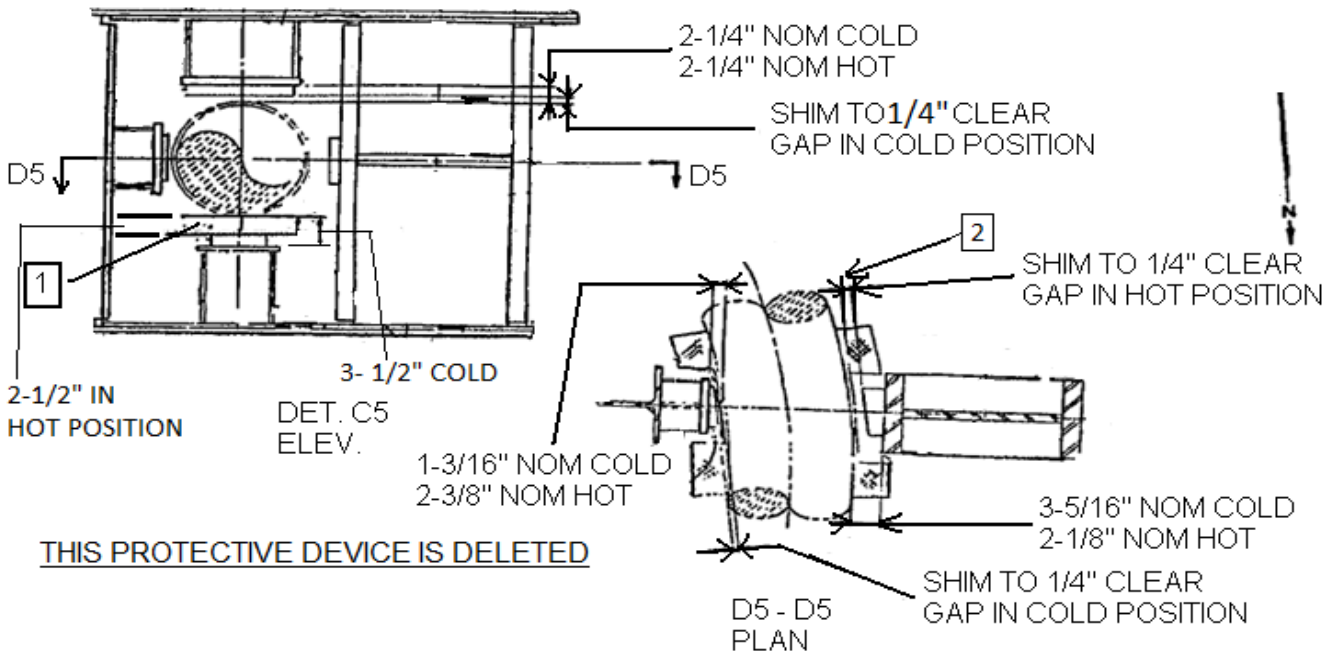

MEASURE POINT	BASE LINE MEASURE AT AMBIENT <105°F	OBSERVED			MEASURED	COOLDOWN FINAL MEASURED <105°F	REMARKS
		250°F (245°-255°)	350°F (345°-355°)	450°F (445°-455°)	557°F (553°-560°)		
LINE TEMP[1]							
INITIAL/ DATE	/	/	/	/	/		/

1 FOR INFO ONLY

Attachment 10
(Page 69 of 72)

PIPE RUPTURE PROTECTIVE DEVICES MAXIMUM PREDICTED THERMAL MOVEMENTS ACCEPTANCE CRITERIA AND DATA READINGS

Date _____

THERMAL EXPANSION TEST RESULTS/PROTECTION DEVICE NUMBER: ___PD03-7___

REF. DWG. NO. ___48W1703-12___ / BLDG. ___I.C.___ / EL. ___722___ / COORD. ___AZ 100°__

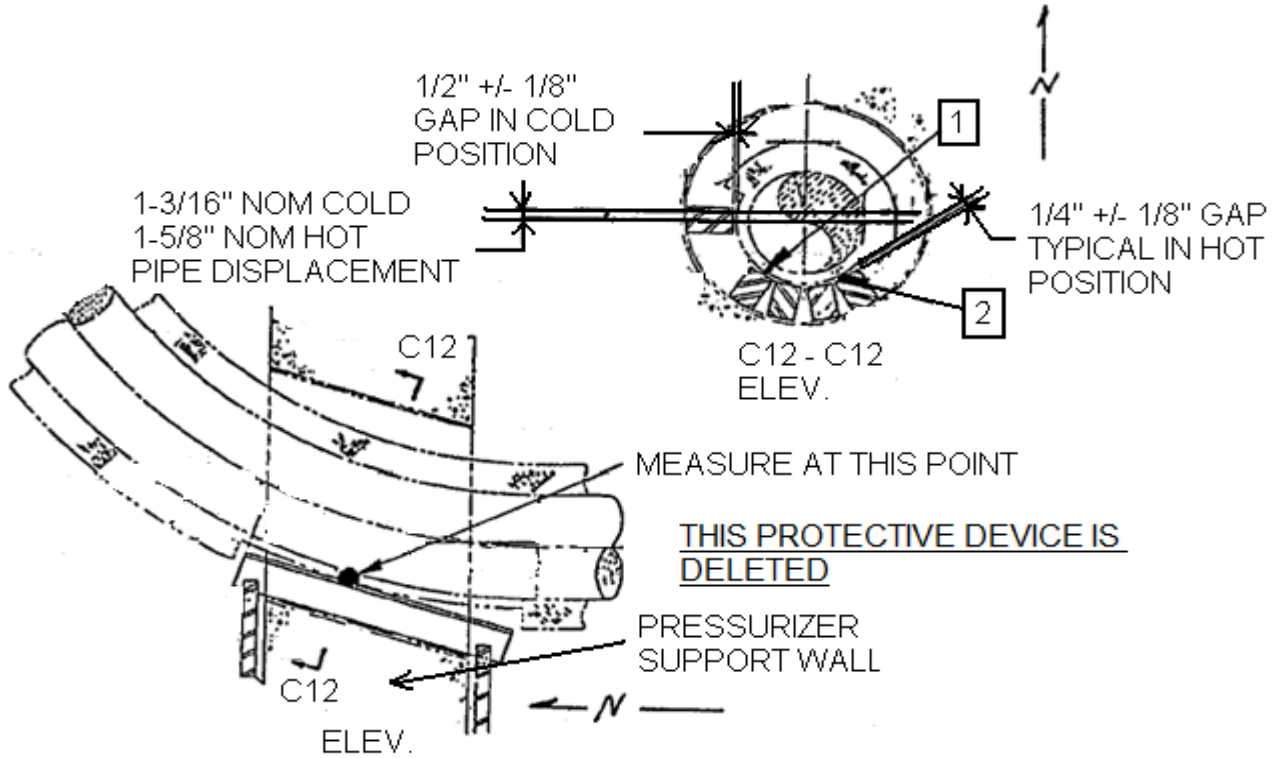

MEASURE POINT	BASE LINE MEASURE AT AMBIENT <105°F	OBSERVED			MEASURED	COOLDOWN FINAL MEASURED <105°F	REMARKS
		250°F (245°-255°)	350°F (345°-355°)	450°F (445°-455°)	557°F (553°-560°)		
LINE TEMP[1]							
INITIAL/ DATE	/	/	/	/	/		/

1 FOR INFO ONLY

Attachment 10
(Page 70 of 72)

PIPE RUPTURE PROTECTIVE DEVICES MAXIMUM PREDICTED THERMAL MOVEMENTS ACCEPTANCE CRITERIA AND DATA READINGS

Date _____

THERMAL EXPANSION TEST RESULTS/PROTECTION DEVICE NUMBER: ____PD03-8___

REF. DWG. NO. ___48W1703-10___ / BLDG. ___IC__ / EL. ___722___ / COORD. ___AZ 125°___

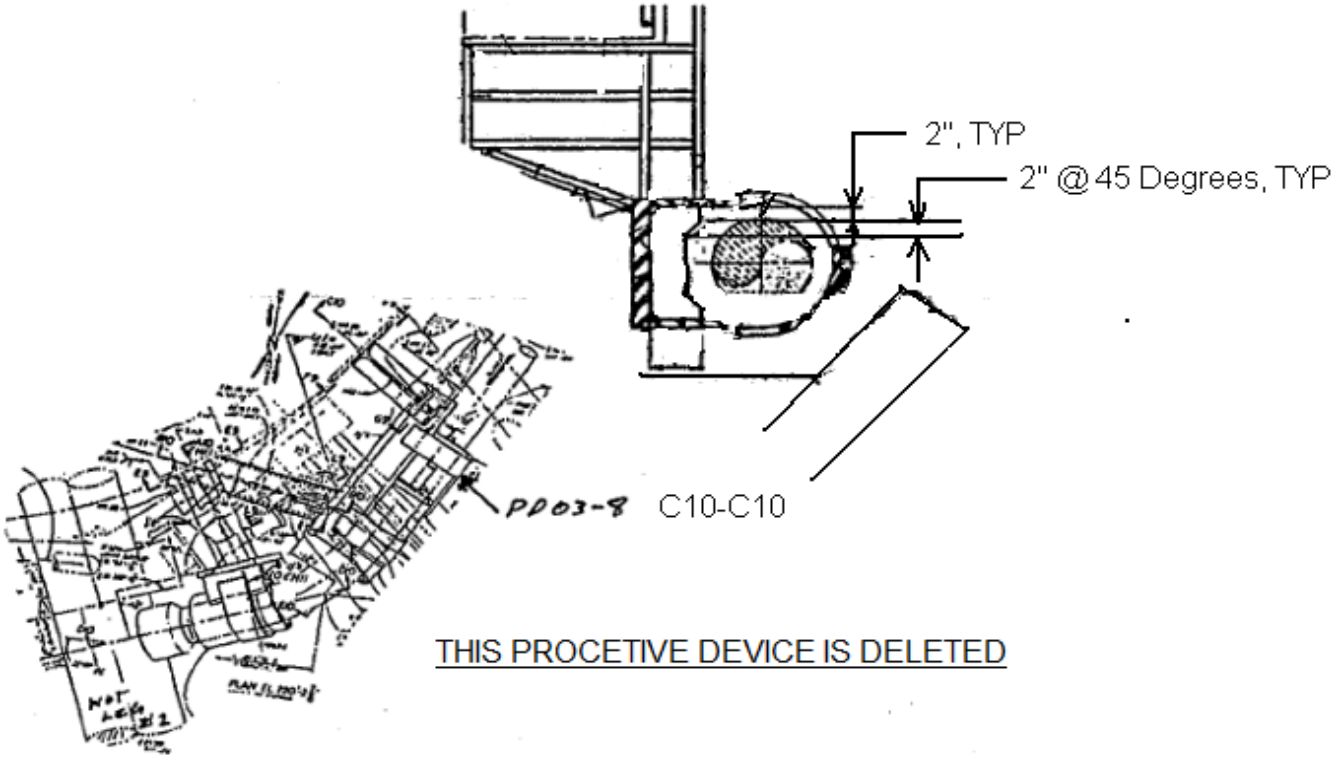

MEASURE POINT	OBSERVED						REMARKS
	AMBIENT <105°F	250°F (245°-255°)	350°F (345°-355°)	450°F (445°-455°)	557°F (553°-560°)	COOLDOWN <105°F	
LINE TEMP[1]							
INITIAL/ DATE	/	/	/	/	/		/

1 FOR INFO ONLY

Attachment 10
(Page 71 of 72)

PIPE RUPTURE PROTECTIVE DEVICES MAXIMUM PREDICTED THERMAL MOVEMENTS ACCEPTANCE CRITERIA AND DATA READINGS

Date _____

THERMAL EXPANSION TEST RESULTS/PROTECTION DEVICE NUMBER: ___PD03-9___

REF. DWG. NO. ___48W1703-13__ / BLDG. ___I.C.___ / EL. ___722___ / COORD. ___AZ 88°___

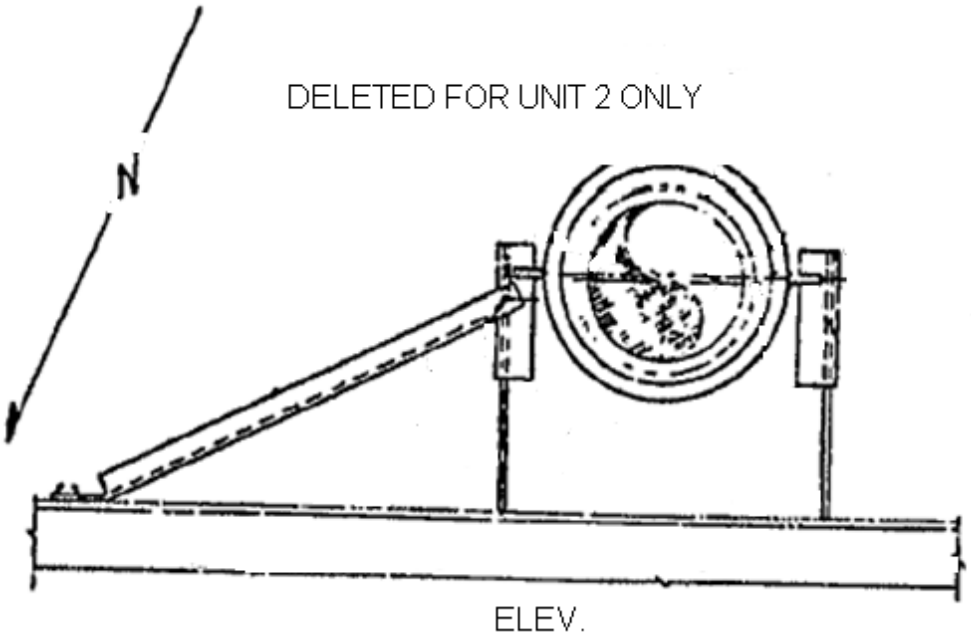

MEASURE POINT	OBSERVED						REMARKS
	AMBIENT <105°F	250°F (245°-255°)	350°F (345°-355°)	450°F (445°-455°)	557°F (553°-560°)	COOLDOWN <105°F	
LINE TEMP[1]							
INITIAL/ DATE	/	/	/	/	/		/

1 FOR INFO ONLY

Attachment 10
(Page 72 of 72)

PIPE RUPTURE PROTECTIVE DEVICES MAXIMUM PREDICTED THERMAL MOVEMENTS ACCEPTANCE CRITERIA AND DATA READINGS

Date _____

THERMAL EXPANSION TEST RESULTS/PROTECTION DEVICE NUMBER: ___PD03-11___

REF. DWG. NO. ___48W1703-13___ / BLDG. ___I.C.___ / EL. ___722___ / COORD. ___AZ 32°__

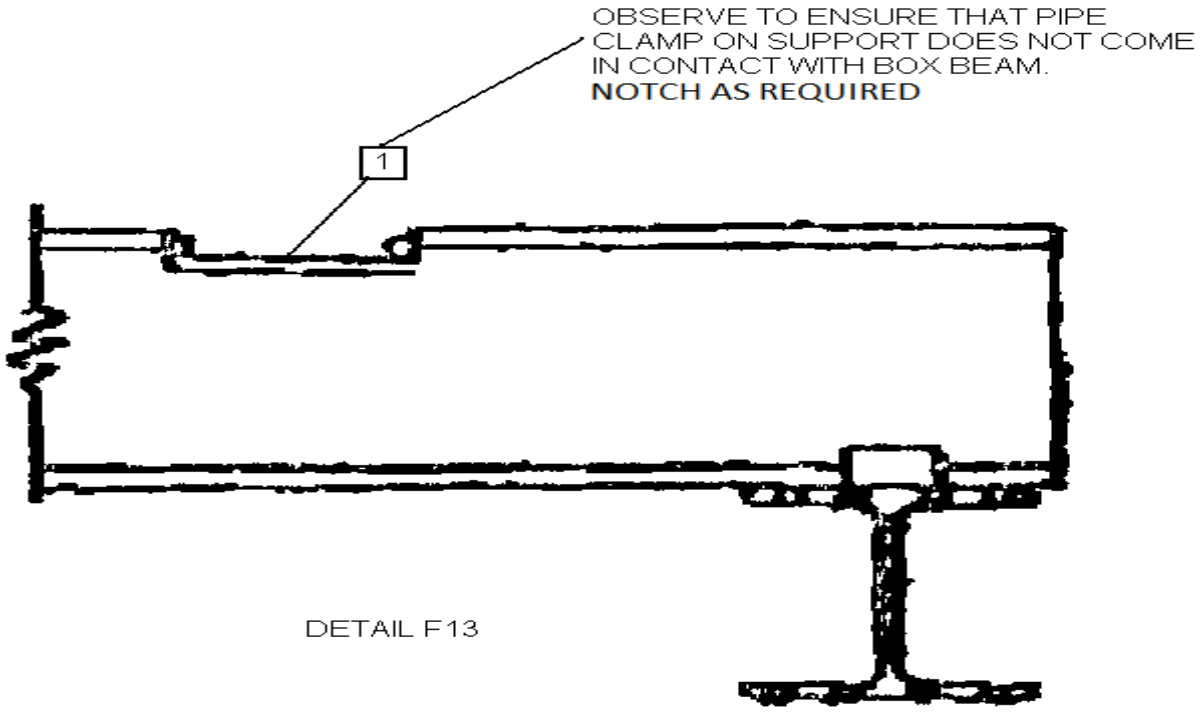

MEASURE POINT	OBSERVED						REMARKS
	AMBIENT <105°F	250°F (245°-255°)	350°F (345°-355°)	450°F (445°-455°)	557°F (553°-560°)	COOLDOWN <105°F	
LINE TEMP[1]							
INITIAL/ DATE	/	/	/	/	/		/

1 FOR INFO ONLY

Attachment 11
(Page 1 of 10)

RCS COMPONENT SUPPORT HOT FUNCTIONAL TEST ACCEPTANCE CRITERIA

Date _____

1.0 REACTOR COOLANT SYSTEM COMPONENT SUPPORT MONITORING LOCATIONS

NOTES

1) The temperatures that Thermal Expansion test data is taken at or considered are:
   - Ambient - baseline data (Less than 105°F)
   - 250°F (245°-255°), 350°F (345°-355°), 450°F (445°-455°), 557°F (553°-560°) (547°F design basis), and Return to Ambient (Less than 105°F) (See TVA Test Scoping documents for further information.)
2) RCP tie rods may have the nuts rotated/removed for HFT and reinstalled (if removed) after HFT. When reinstalling nuts to original configuration, install nuts to hand tight, insert cotter pin or tighten until cotter pin can be inserted. Do **NOT** exceed snug tight. (See Westinghouse letter WAT-D-9650.)
3) Unit 2, RCL Primary Equipment Support Shim Gap Criteria Summary is as shown on sheet 2 of this Attachment. This sheet provides the criteria for the Cold and Hot Gap (HFT) conditions and sheets 3 thru 10 shows the general locations where the gaps are located. The measurements using the acceptance data in this Attachment shall be recorded on Attachments 12, 13, 14, 15, 16 and 17 for the appropriate temperature plateau.
4) For any deviation in gap Acceptance Criteria found between Sheet 2 and the drawings, Sheets 3 thru 10, the gap measurement shown on the drawing governs.
5) For additional details and locations, see TVA Drawings ; 2-48N410 R0, 48N414 R19, 48N415 R11, 48N417 R13, 48N418 R15, 48N419 R18, 48N421 R19, 48N422 R9.
6) Cautionary Note:

   Zero (0”) side gap exists between RPV shoe and the support structure. This is consistent with Section A-A of Drawing 2-48N410 R0. Westinghouse drawing 583F855 R9 list the gap as 1/32” in the cold position. Westinghouse cautions that there is a possibility of potential movement/noise during HFT if there is a slippage at shoes.

Attachment 11
(Page 2 of 10)

RCS COMPONENT SUPPORT HOT FUNCTIONAL TEST ACCEPTANCE CRITERIA

Date _____

1.0 REACTOR COOLANT SYSTEM COMPONENT SUPPORT MONITORING LOCATIONS (continued)

Watts Bar Unit 2, RCL Primary Equipment Support Shim Gap Criteria Summary			
COLD GAP		HOT GAP	
TVA DRAWING (1)	WESTINGHOUSE DRAWING (2)	TVA DRAWING (1)	WESTINGHOUSE DRAWING (2)
SG Lower Support Back Bumpers (Acting Away from Vessel)			
2-1/2”	2-1/2”	3/16” ± 1/64”	3/16” ± 1/64”
SG Lower Support Side Bumpers (Acting Perpendicular to Hot Leg)			
1”	1”	1/32” ± 1/64”	1/32” ± 1/64”
SG Upper Support Back Bumpers (Acting Away from Vessel)			
2-1/2”	2-1/2”	3/16” ± 1/64”	3/16” ± 1/64”
SG Shell and Upper Support Ring Girder			
3/8”	3/8”	1/16” (+1/16”, -1/64”) (5)	1/16” ± 1/64”
Crossover Leg 90 Degree Elbow Pipe Whip Restraints (SG Side)			
3/4”	1-1/4” (3)	0”	0”
Crossover Leg 90 Degree Elbow Pipe Whip Restraints (RCP Side)			
1-3/8”	1-3/8”	0”	0”
RCP Tie Rods			
-	-	0”	0”
Pressurizer Upper Support Brackets (Acting Tangential to Pressurizer)			
0”	0”	0”	0”
Pressurizer Upper Support Brackets (Acting Radial to Pressurizer)			
1/2”	1/2”	0”	0”
Reactor Vessel Support (Support Shoe to Support Structure)			
0”	1/32” (4)	-	-
Reactor Vessel Support (Support Structure to Concrete Embedment)			
0”	1/32” (4)	-	-
SG Inlet Elbow Pipe Whip Restraint			
1-3/4”	Deactivated	1/32”	Deactivated
Crossover Leg Vertical Drop Pipe Whip Restraint			
5-1/8”	Deactivated	5/8” ± 1/64”	Deactivated
Primary Shield Wall Pipe Whip Restraints (Hot Leg)			
-	Deactivated	1/2”	Deactivated
Primary Shield Wall Pipe Whip Restraints (Cold Leg)			
-	Deactivated	1/2” and 1/4”	Deactivated

NOTES

1) Gaps as shown on TVA drawings.

2) Gaps as stated in Westinghouse document LTR-PAFM-11-23, Rev. 1.

3) Actual field measurements taken shows the gaps are much larger than the cold gaps shown on drawings for S.G. and Reactor Pressure Vessel sides and these will be shimmed to the desired gaps as shown on drawings.

4) See Sect 3.3.2 of 2-TSD-HFT-1 for resolution for the difference.

5) This deviation is evaluated and reconciled.

For any deviation in gap Acceptance Criteria found between this sheet and drawings, Sheets 3 thru 10, the gap measurement shown on the drawing governs.

Attachment 11
(Page 3 of 10)

RCS COMPONENT SUPPORT HOT FUNCTIONAL TEST ACCEPTANCE CRITERIA

Date _____

1.0 REACTOR COOLANT SYSTEM COMPONENT SUPPORT MONITORING LOCATIONS (continued)

LOWER STEAM GENERATOR SUPPORTS

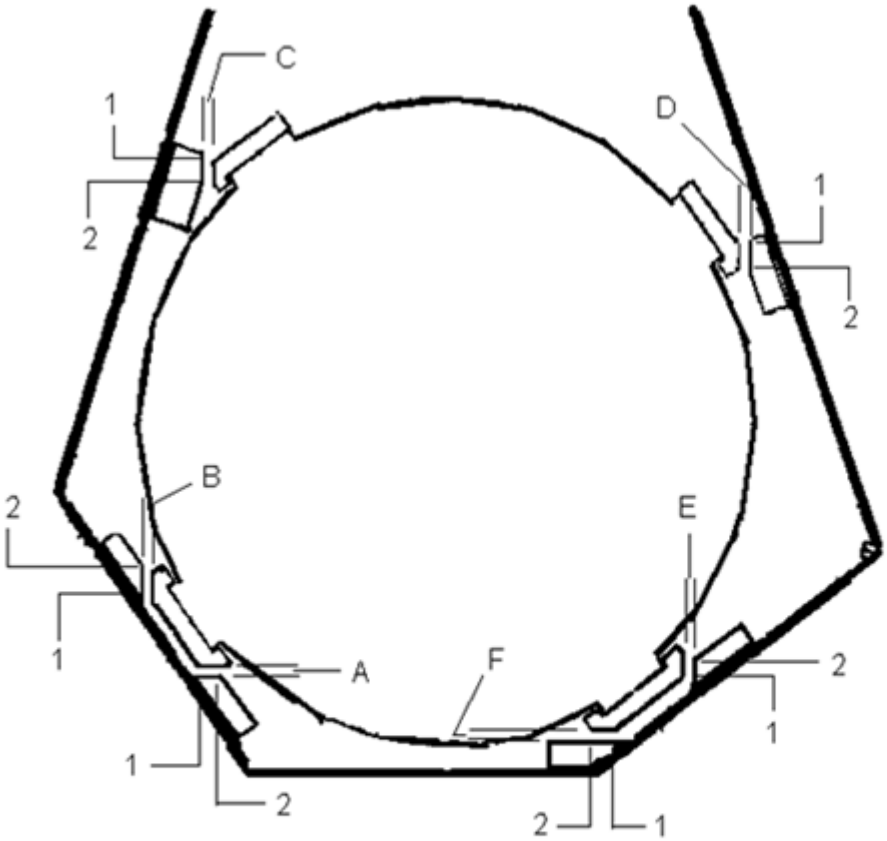

ACCEPTANCE CRITERIA

GAPS MUST BE > 0 FOR ALL TEMPERATURES.

AT 557 DEGREES
A AND F: 3/16"+/- 1/64"
B, C, D AND E: 1/32"+/- 1/64"

3 DIRECTLY BELOW 1
4 DIRECTLY BELOW 2

SEE SKETCH BELOW

LOWER S. G. SUPPORT

PLAN @ ELEVATION 722' - 1 13/16"

TYPICAL 4 LOOPS

REFERENCE DRAWING 48N414
DRA 55880-002

Attachment 11
(Page 4 of 10)

RCS COMPONENT SUPPORT HOT FUNCTIONAL TEST ACCEPTANCE CRITERIA

Date _____

1.0 REACTOR COOLANT SYSTEM COMPONENT SUPPORT MONITORING LOCATIONS (continued)

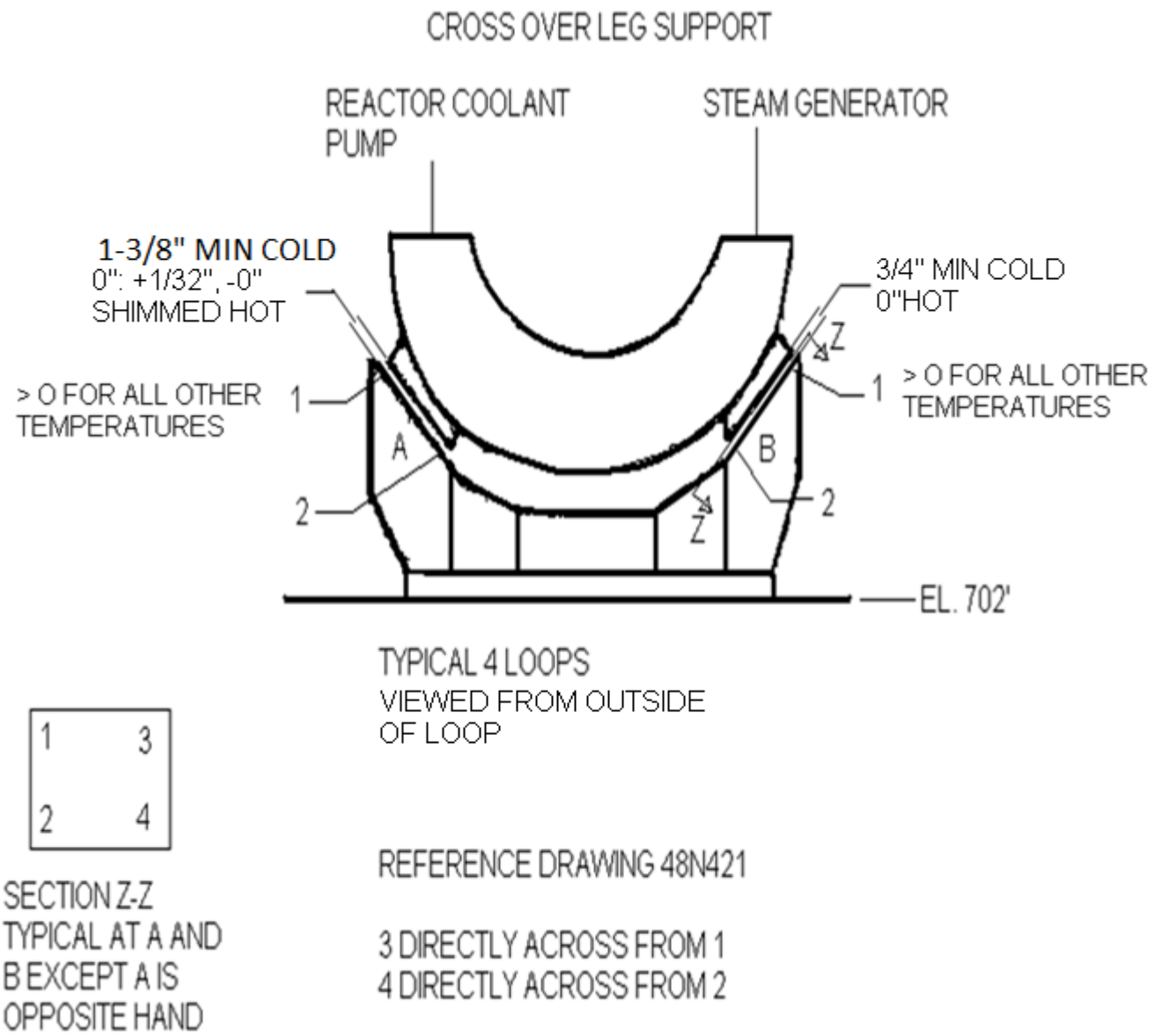

Attachment 11
(Page 5 of 10)

RCS COMPONENT SUPPORT HOT FUNCTIONAL TEST ACCEPTANCE CRITERIA

Date _____

1.0 REACTOR COOLANT SYSTEM COMPONENT SUPPORT MONITORING LOCATIONS (continued)

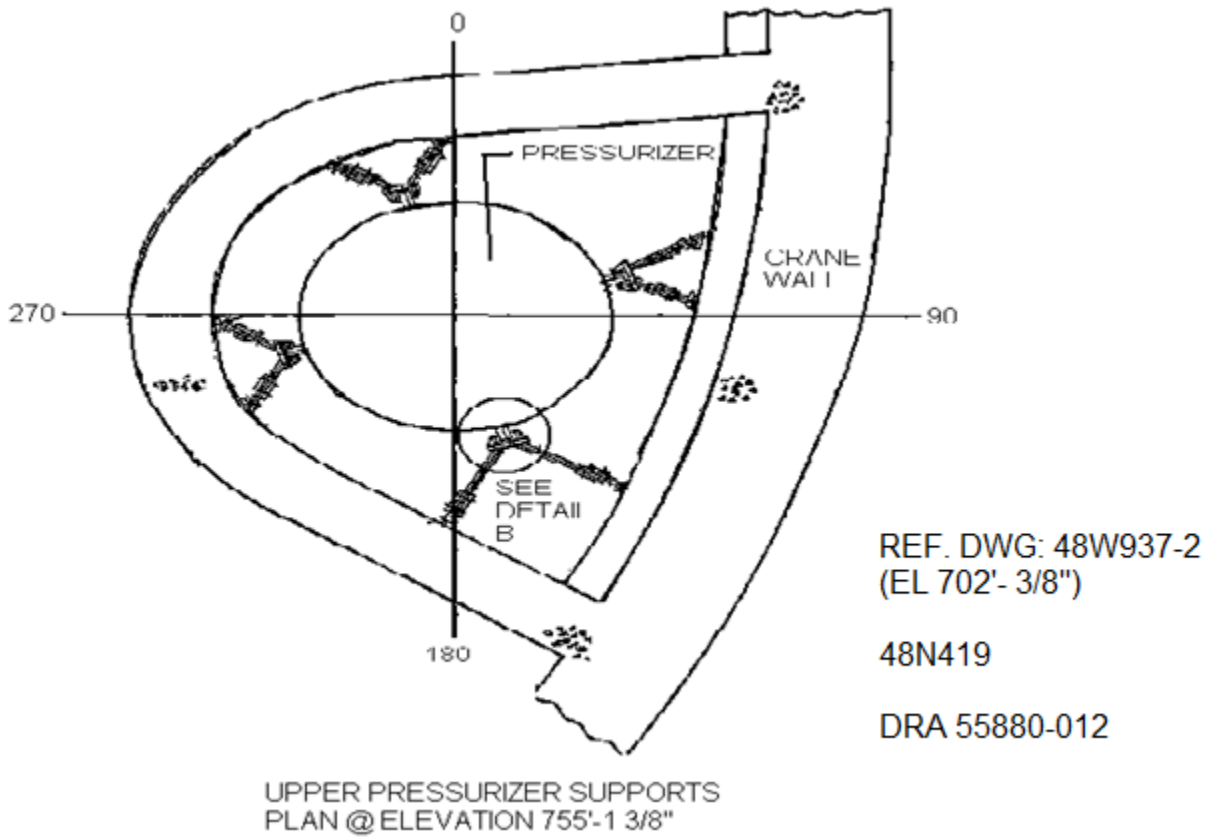

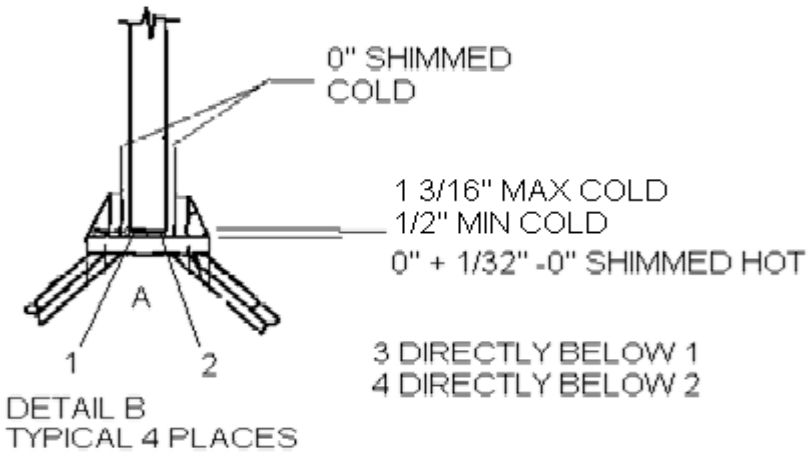

Attachment 11
(Page 6 of 10)

RCS COMPONENT SUPPORT HOT FUNCTIONAL TEST ACCEPTANCE CRITERIA

Date _____

1.0 REACTOR COOLANT SYSTEM COMPONENT SUPPORT MONITORING LOCATIONS (continued)

MEASURE ALL STEAM GENERATOR AND REACTOR COOLANT PUMP VERTICALCOLUMNS, AS SHOWN.

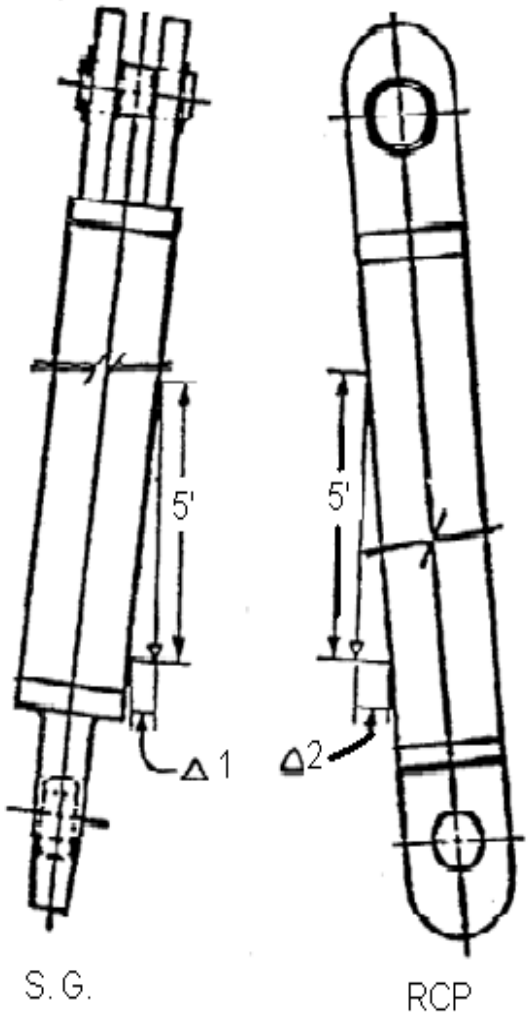

NO ACCEPTANCE CRITERIA

REFERENCE
WAT (EAN) - 2182

RECORD MEASUREMENTS AT AMBIENT, 557 DEGREES F AND RETURN TO AMBIENT

EVALUATE THE DATA FROM THE HOT FUNCTIONAL TESTING FOR ACCEPABILITY INCLUDING REACTOR COOLANT PUMP (RCP) COLUMN TILT (PER 178000) AND DETERMINE IF ANY ADDITIONAL ACTIONS ARE NECESSARY FOR WESTINGHOUSE TO EVALUATE DATA NOT MEETING TOLERANCE REQUIREMENTS AND UPDATE THE APPROPRIATE UNIT 2 CIVIL SUPPORT CALCULATION.

TYPICAL ALL 4 LOOPS

Attachment 11
(Page 7 of 10)

RCS COMPONENT SUPPORT HOT FUNCTIONAL TEST ACCEPTANCE CRITERIA

Date _____

1.0 REACTOR COOLANT SYSTEM COMPONENT SUPPORT MONITORING LOCATIONS (continued)

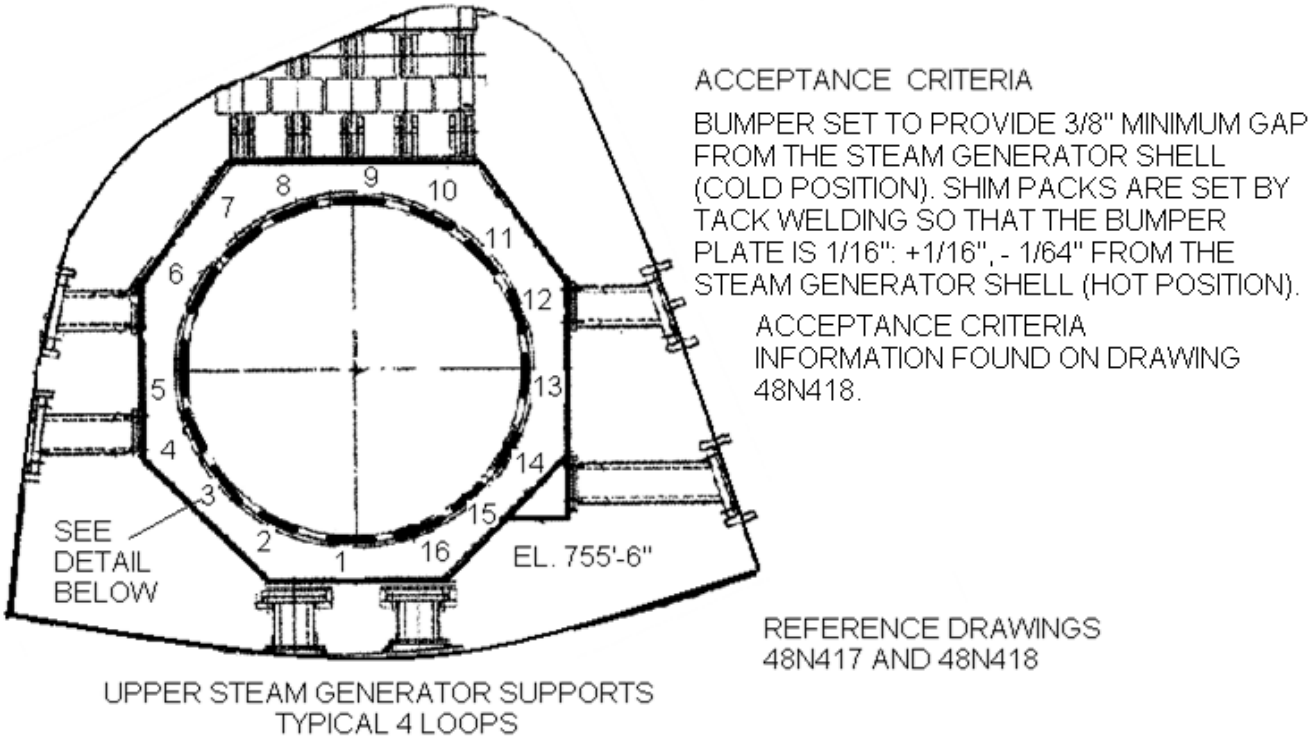

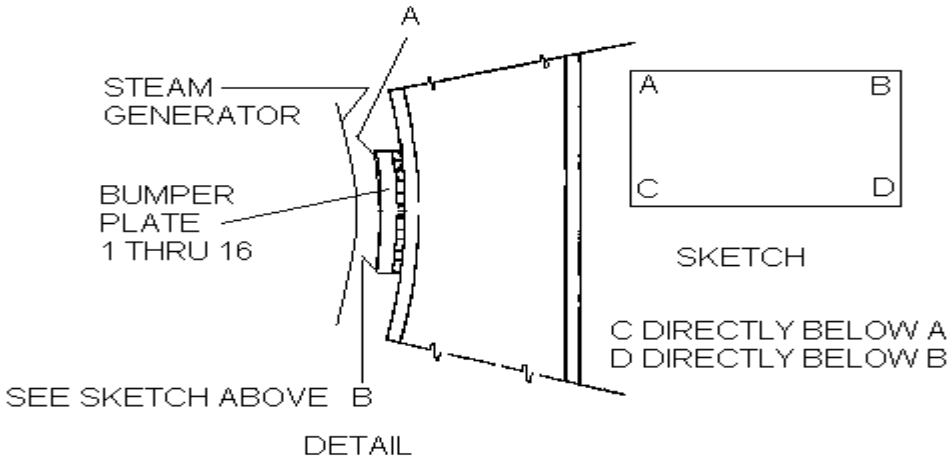

Attachment 11
(Page 8 of 10)

RCS COMPONENT SUPPORT HOT FUNCTIONAL TEST ACCEPTANCE CRITERIA

Date _____

1.0 REACTOR COOLANT SYSTEM COMPONENT SUPPORT MONITORING LOCATIONS (continued)

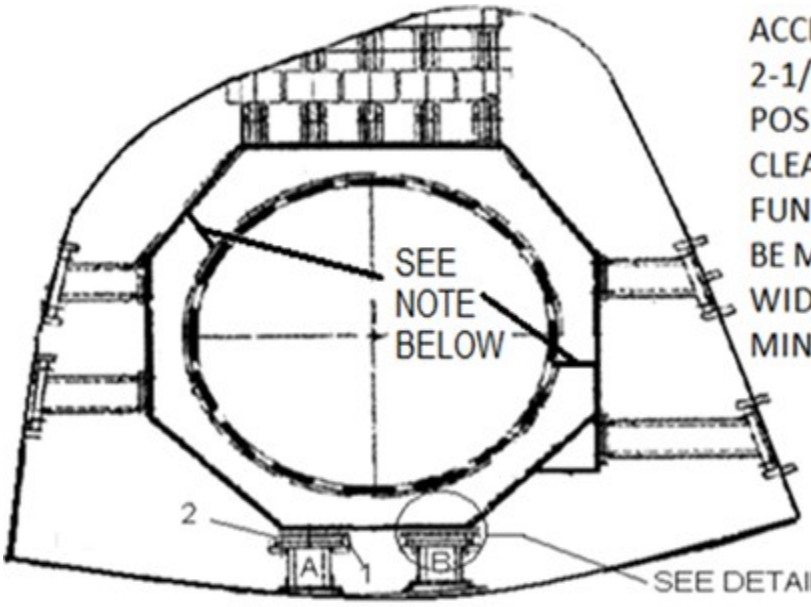

ACCEPTANCE CRITERIA
2-1/2" MINIMUM CLEARANCE COLD POSITION. SHIM TO 3/16" +/- 1/64" CLEARANCE DURING HOT FUNCTIONAL TESTING WITH GAP TO BE MAINTAINED ACROSS SHIM WIDTH AT WEB LOCATIONS AS A MINIMUM.

REFERENCE DRAWINGS
48N417

SEE DETAIL A

STEAM GENERATOR UPPER SUPPORT
STRUTS PLAN @ EL. 755'-6 1/8"

TYPICAL 4 LOOPS

NOTE:

THE RING GIRDER BOLTS SPECIFICALLY AT THE SPLICE PLATE SHOULD BE CHECKED FOR BROKEN, CRACKED OR LOOSE BOLTS AFTER THE HFT AT AMBIENT TEMPERATURE. RECORD THE DEFECTS/DEFICIENCIES.

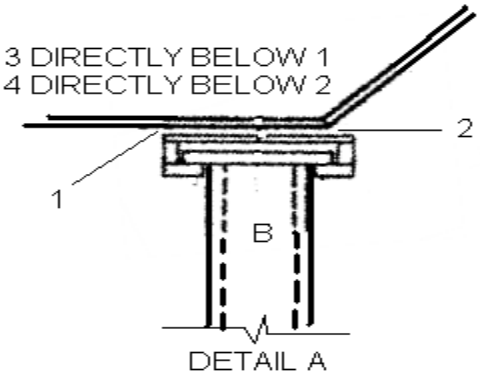

DETAIL A

Attachment 11
(Page 9 of 10)

RCS COMPONENT SUPPORT HOT FUNCTIONAL TEST ACCEPTANCE CRITERIA

Date _____

1.0 REACTOR COOLANT SYSTEM COMPONENT SUPPORT MONITORING LOCATIONS (continued)

NOTE:

1. HYDRAULIC FLUID IS STRAW COLORED WITH THE CONSISTENCY OF LIGHT MOTOR OIL. IF ANY ONE OF THEM IS FOUND TO BE LEAKING, THEY SHOULD BE NOTED.
2. FIELD TO VERIFY MINIMUM DIMENSION OF 2-11-3/4" AFTER COMPLETION OF HOT FUNCTIONAL TESTING.

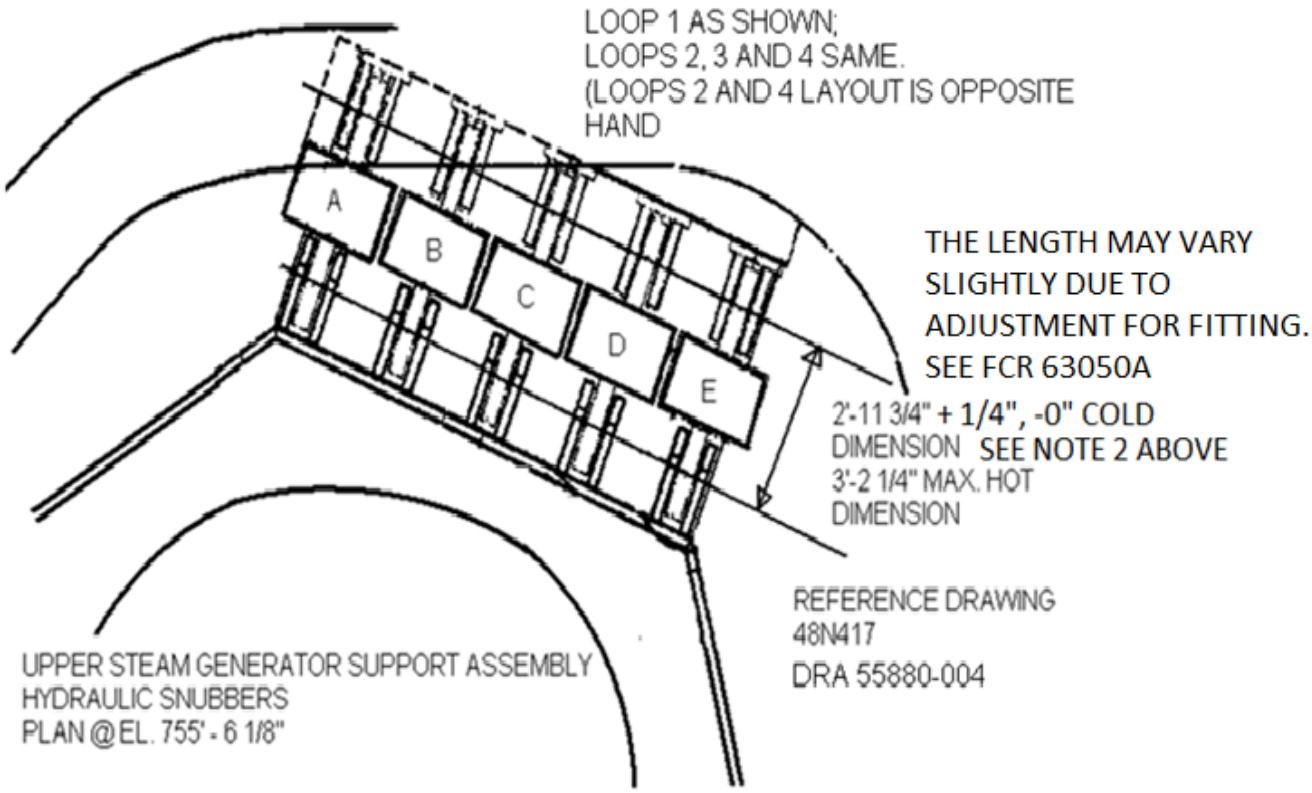

Attachment 11
(Page 10 of 10)

RCS COMPONENT SUPPORT HOT FUNCTIONAL TEST ACCEPTANCE CRITERIA

Date _____

1.0 REACTOR COOLANT SYSTEM COMPONENT SUPPORT MONITORING LOCATIONS (continued)

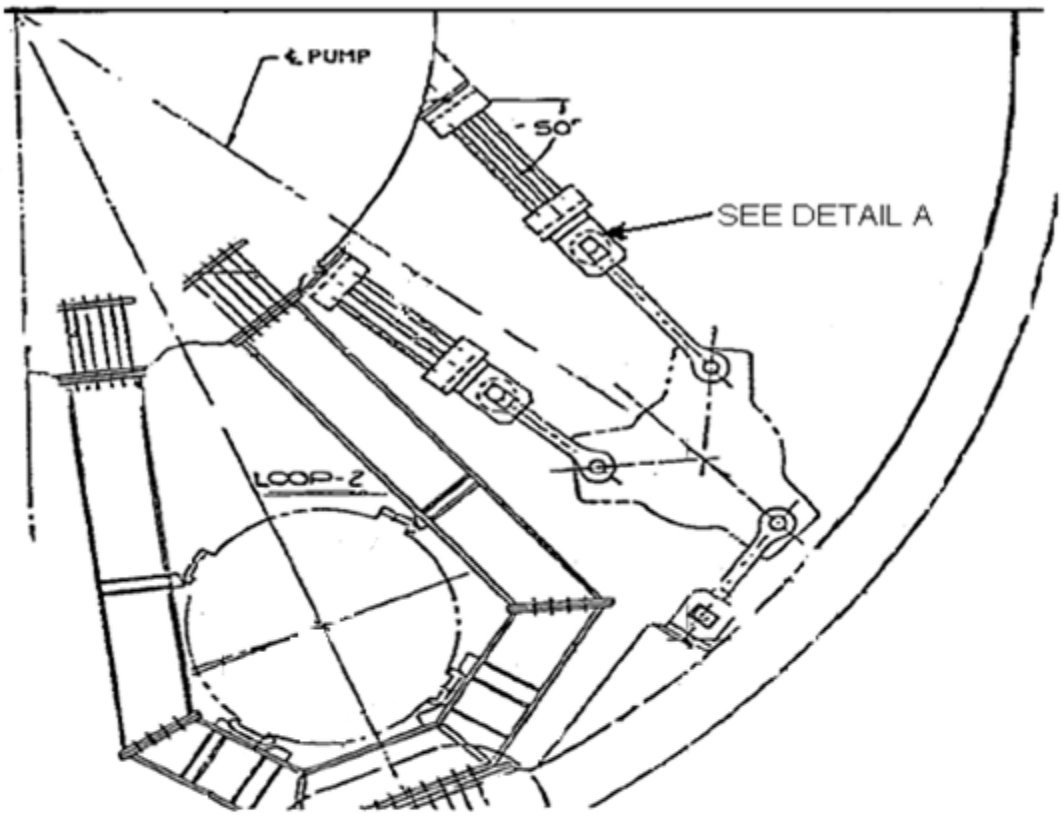

TYPICAL
RCP'S FOR ALL 4 LOOPS

REFERENCE DRAWING
48N413, 48N415 AND DRA55880-003

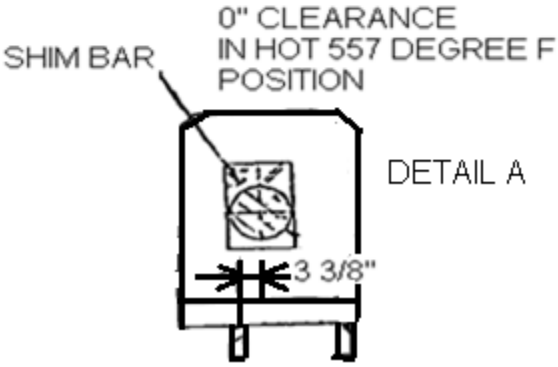

Attachment 12
(Page 1 of 35)

REACTOR COOLANT SYSTEM COMPONENT SUPPORT PRE HOT FUNCTIONAL TEST AMBIENT TEMPERATURE <105°F DATA READINGS

Date _____

STEAM GENERATOR UPPER SUPPORT LAYOUT DETAIL

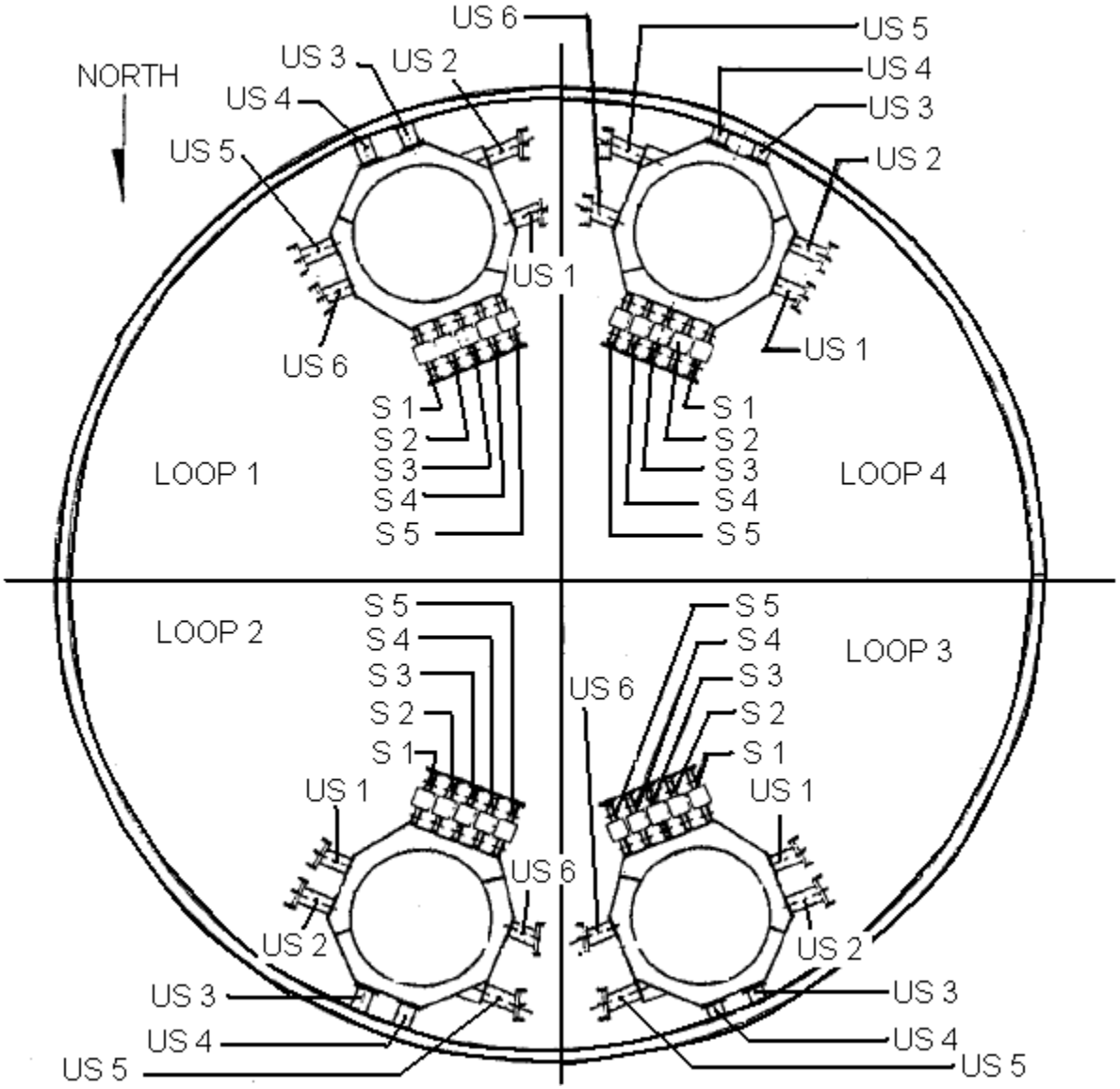

Attachment 12
(Page 2 of 35)

REACTOR COOLANT SYSTEM COMPONENT SUPPORT PRE HOT FUNCTIONAL TEST AMBIENT TEMPERATURE <105°F DATA READINGS

Date _____

STEAM GENERATOR UPPER SUPPORT DYNAMIC SNUBBERS DATA SHEET

SG IDENTIFICATION SG-1

INITIALS: _____

DATE: _____

SYSTEM TEMP: _____

ROD MEASUREMENT "A"

DATE	TIME	DYNAMIC SNUBBERS IDENTIFICATION				
		S-1	S-2	S-3	S-4	S-5

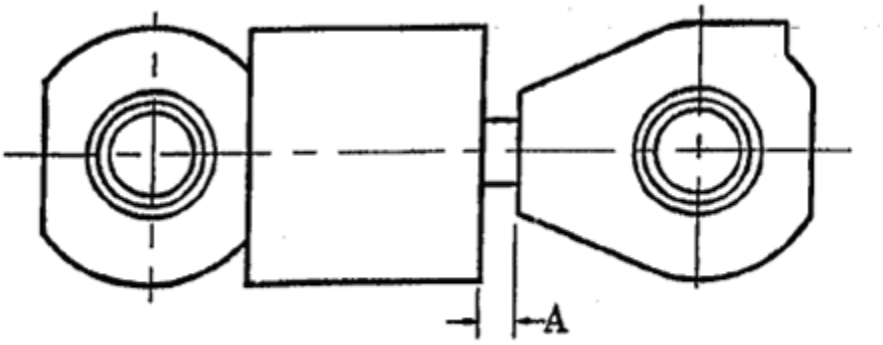

Attachment 12
(Page 3 of 35)

REACTOR COOLANT SYSTEM COMPONENT SUPPORT PRE HOT FUNCTIONAL TEST AMBIENT TEMPERATURE <105°F DATA READINGS

Date _____

STEAM GENERATOR UPPER SUPPORT DYNAMIC SNUBBERS DATA SHEET

SG IDENTIFICATION SG-2

INITIALS: _____

DATE: _____

SYSTEM TEMP: _____

ROD MEASUREMENT "A"

DATE	TIME	DYNAMIC SNUBBERS IDENTIFICATION				
		S-1	S-2	S-3	S-4	S-5

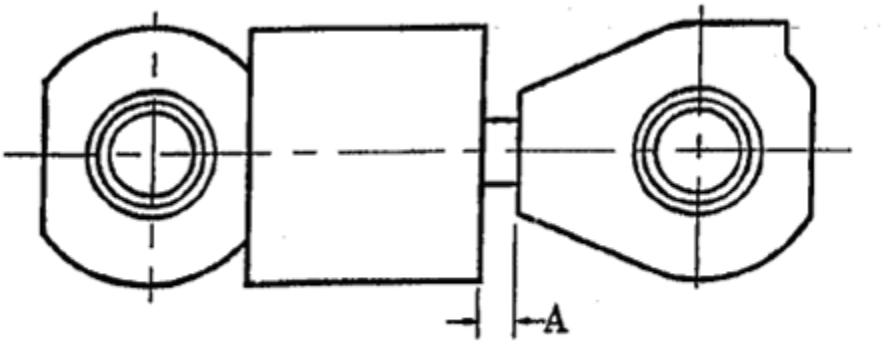

Attachment 12
(Page 4 of 35)

REACTOR COOLANT SYSTEM COMPONENT SUPPORT PRE HOT FUNCTIONAL TEST AMBIENT TEMPERATURE <105°F DATA READINGS

Date _____

STEAM GENERATOR UPPER SUPPORT DYNAMIC SNUBBERS DATA SHEET

SG IDENTIFICATION SG-3

INITIALS: _____

DATE: _____

SYSTEM TEMP: _____

ROD MEASUREMENT "A"

DATE	TIME	DYNAMIC SNUBBERS IDENTIFICATION				
		S-1	S-2	S-3	S-4	S-5

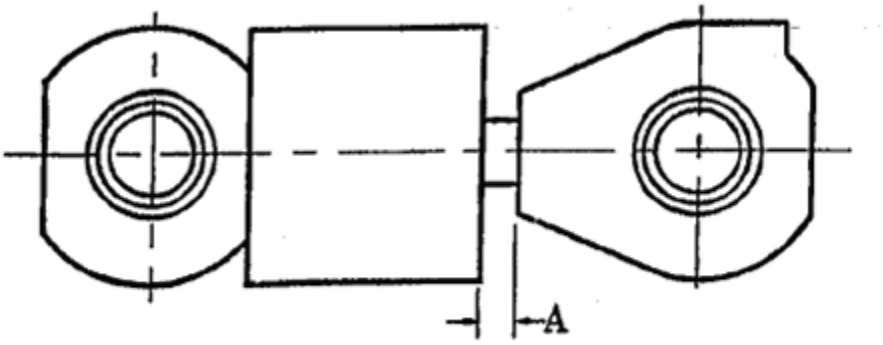

Attachment 12
(Page 5 of 35)

REACTOR COOLANT SYSTEM COMPONENT SUPPORT PRE HOT FUNCTIONAL TEST AMBIENT TEMPERATURE <105°F DATA READINGS

Date _____

STEAM GENERATOR UPPER SUPPORT DYNAMIC SNUBBERS DATA SHEET

SG IDENTIFICATION SG-4

INITIALS: _____

DATE: _____

SYSTEM TEMP: _____

ROD MEASUREMENT "A"

DATE	TIME	DYNAMIC SNUBBERS IDENTIFICATION				
		S-1	S-2	S-3	S-4	S-5

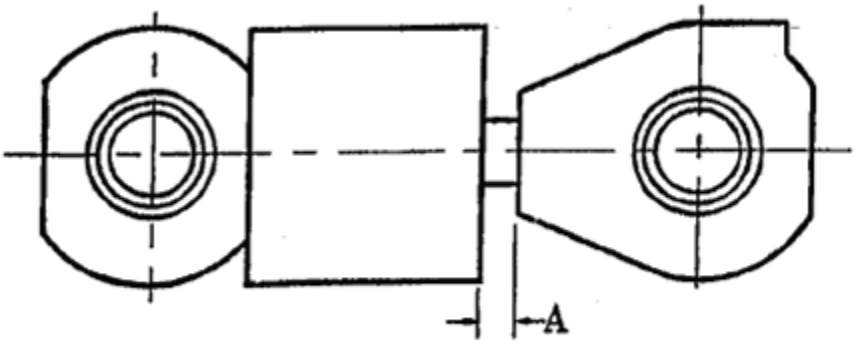

Attachment 12
(Page 6 of 35)

REACTOR COOLANT SYSTEM COMPONENT SUPPORT PRE HOT FUNCTIONAL TEST AMBIENT TEMPERATURE <105°F DATA READINGS

Date _____

STEAM GENERATOR UPPER SUPPORT DATA SHEET

SG IDENTIFICATION SG-1
DATE: _____
TIME: _____
INITIALS: _____
SYSTEM TEMP: _____

GAP MEASUREMENTS

GAP NO.	BUMPER IDENTIFICATION					
	US-1	US-2	US-3	US-4	US-5	US-6
1						
2						
3						
4						

NOTE

Gap 2 is below gap 1 for US-1, US-2, US-5 and US-6.
Gaps 3 and 4 are below 1 and 2 respectively for US-3 and US-4.

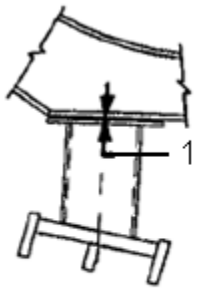

US-1 & US-2

US-5 & US-6

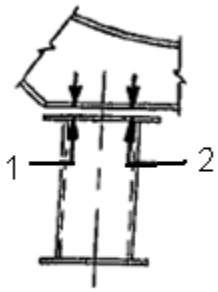

US-3 & US-4

Attachment 12
(Page 7 of 35)

REACTOR COOLANT SYSTEM COMPONENT SUPPORT PRE HOT FUNCTIONAL TEST AMBIENT TEMPERATURE <105°F DATA READINGS

Date _____

STEAM GENERATOR UPPER SUPPORT DATA SHEET

SG IDENTIFICATION SG-2
DATE: _____
TIME: _____
INITIALS: _____
SYSTEM TEMP: _____

GAP MEASUREMENTS

GAP NO.	BUMPER IDENTIFICATION					
	US-1	US-2	US-3	US-4	US-5	US-6
1						
2						
3						
4						

NOTE

Gap 2 is below gap 1 for US-1, US-2, US-5 and US-6.
Gaps 3 and 4 are below 1 and 2 respectively for US-3 and US-4.

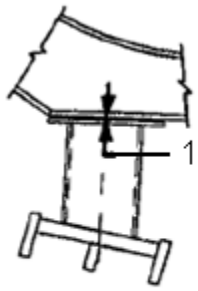

US-1 & US-2

US-5 & US-6

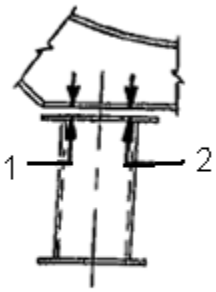

US-3 & US-4

Attachment 12
(Page 8 of 35)

REACTOR COOLANT SYSTEM COMPONENT SUPPORT PRE HOT FUNCTIONAL TEST AMBIENT TEMPERATURE <105°F DATA READINGS

Date _____

STEAM GENERATOR UPPER SUPPORT DATA SHEET

SG IDENTIFICATION SG-3
DATE: _____
TIME: _____
INITIALS: _____
SYSTEM TEMP: _____

GAP MEASUREMENTS

GAP NO.	BUMPER IDENTIFICATION					
	US-1	US-2	US-3	US-4	US-5	US-6
1						
2						
3						
4						

NOTE

Gap 2 is below gap 1 for US-1, US-2, US-5 and US-6.
Gaps 3 and 4 are below 1 and 2 respectively for US-3 and US-4.

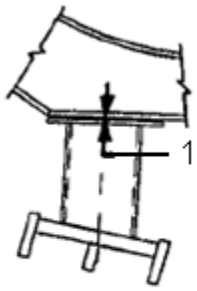

US-1 & US-2

US-5 & US-6

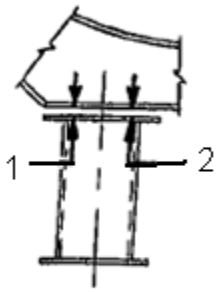

US-3 & US-4

Attachment 12
(Page 9 of 35)

REACTOR COOLANT SYSTEM COMPONENT SUPPORT PRE HOT FUNCTIONAL TEST AMBIENT TEMPERATURE <105°F DATA READINGS

Date _____

STEAM GENERATOR UPPER SUPPORT DATA SHEET

SG IDENTIFICATION SG-4
DATE: _____
TIME: _____
INITIALS: _____
SYSTEM TEMP: _____

GAP MEASUREMENTS

GAP NO.	BUMPER IDENTIFICATION					
	US-1	US-2	US-3	US-4	US-5	US-6
1						
2						
3						
4						

NOTE

Gap 2 is below gap 1 for US-1, US-2, US-5 and US-6.
Gaps 3 and 4 are below 1 and 2 respectively for US-3 and US-4.

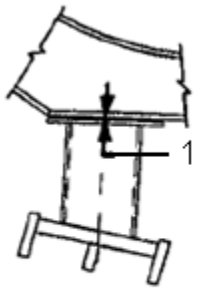

US-1 & US-2

US-5 & US-6

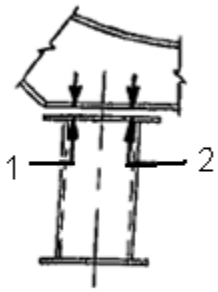

US-3 & US-4

Attachment 12
(Page 10 of 35)

REACTOR COOLANT SYSTEM COMPONENT SUPPORT PRE HOT FUNCTIONAL TEST AMBIENT TEMPERATURE <105°F DATA READINGS

Date _____

STEAM GENERATOR LOWER SUPPORT LAYOUT DETAILS

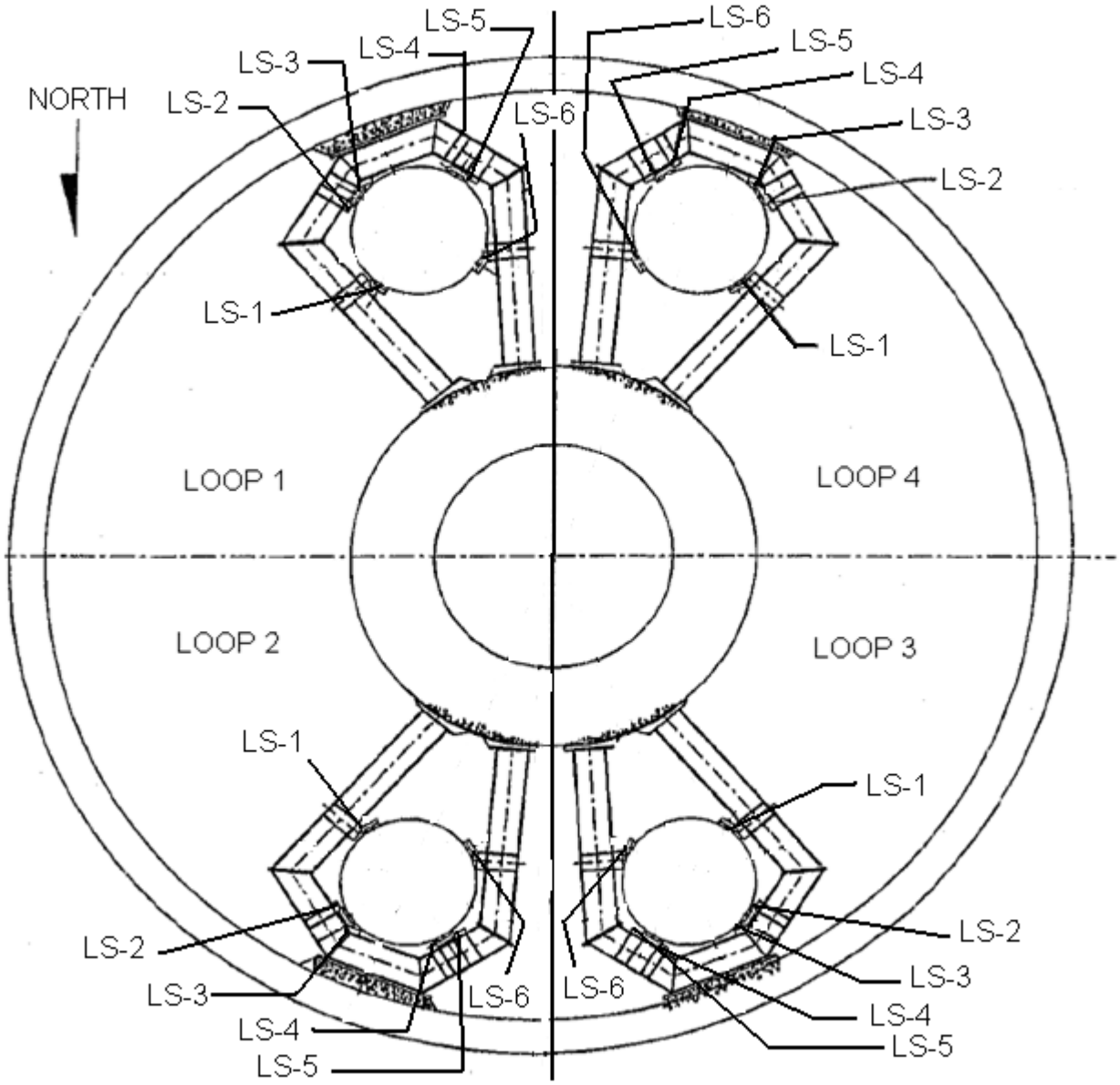

Attachment 12
(Page 11 of 35)

REACTOR COOLANT SYSTEM COMPONENT SUPPORT PRE HOT FUNCTIONAL TEST AMBIENT TEMPERATURE <105°F DATA READINGS

Date _____

STEAM GENERATOR LOWER SUPPORT DATA SHEET

SG IDENTIFICATION SG-1
DATE: _____
TIME: _____
INITIALS: _____
SYSTEM TEMP: _____

GAP MEASUREMENTS

GAP NO.	BUMPER IDENTIFICATION					
	LS-1	LS-2	LS-3	LS-4	LS-5	LS-6
1						
2						
3						
4						

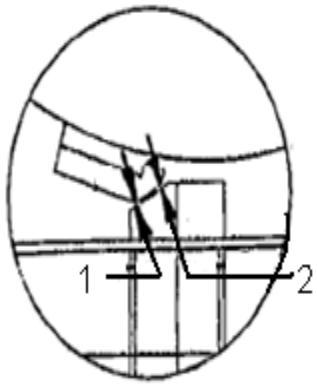

LS-1

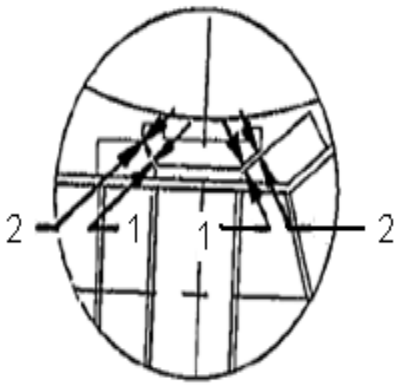

LS-2 & LS-3

LS-4 & LS-5

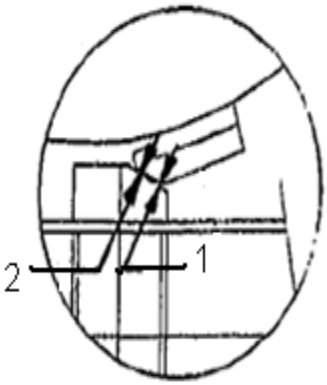

LS-6

Attachment 12
(Page 12 of 35)

REACTOR COOLANT SYSTEM COMPONENT SUPPORT PRE HOT FUNCTIONAL TEST AMBIENT TEMPERATURE <105°F DATA READINGS

Date _____

STEAM GENERATOR LOWER SUPPORT DATA SHEET

SG IDENTIFICATION SG-2
DATE: _____
TIME: _____
INITIALS: _____
SYSTEM TEMP: _____

GAP MEASUREMENTS

GAP NO.	BUMPER IDENTIFICATION					
	LS-1	LS-2	LS-3	LS-4	LS-5	LS-6
1						
2						
3						
4						

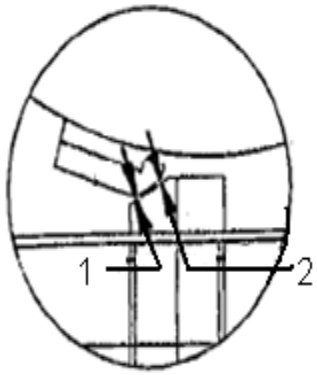

LS-1

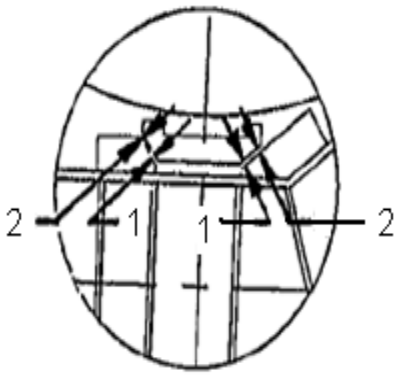

LS-2 & LS-3

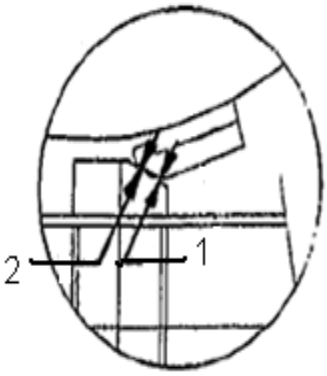

LS-6

LS-4 & LS-5

Attachment 12
(Page 13 of 35)

REACTOR COOLANT SYSTEM COMPONENT SUPPORT PRE HOT FUNCTIONAL TEST AMBIENT TEMPERATURE <105°F DATA READINGS

Date _____

STEAM GENERATOR LOWER SUPPORT DATA SHEET

SG IDENTIFICATION SG-3
DATE: _____
TIME: _____
INITIALS: _____
SYSTEM TEMP: _____

GAP MEASUREMENTS

GAP NO.	BUMPER IDENTIFICATION					
	LS-1	LS-2	LS-3	LS-4	LS-5	LS-6
1						
2						
3						
4						

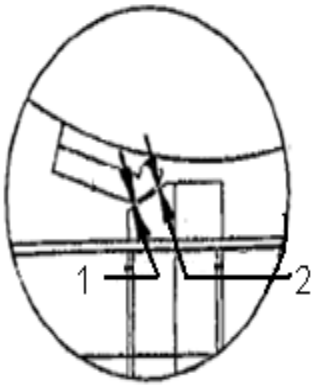

LS-1

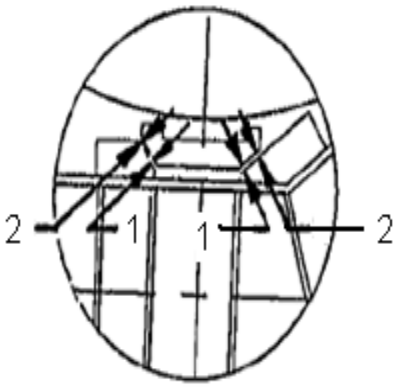

LS-2 & LS-3

LS-4 & LS-5

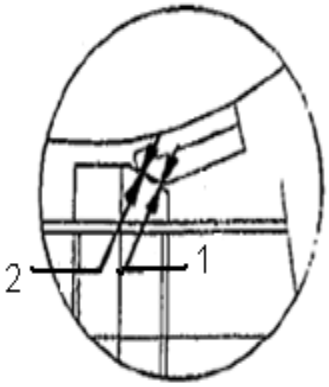

LS-6

Attachment 12
(Page 14 of 35)

REACTOR COOLANT SYSTEM COMPONENT SUPPORT PRE HOT FUNCTIONAL TEST AMBIENT TEMPERATURE <105°F DATA READINGS

Date _____

STEAM GENERATOR LOWER SUPPORT DATA SHEET

SG IDENTIFICATION SG-4
DATE: _____
TIME: _____
INITIALS: _____
SYSTEM TEMP: _____

GAP MEASUREMENTS

GAP NO.	BUMPER IDENTIFICATION					
	LS-1	LS-2	LS-3	LS-4	LS-5	LS-6
1						
2						
3						
4						

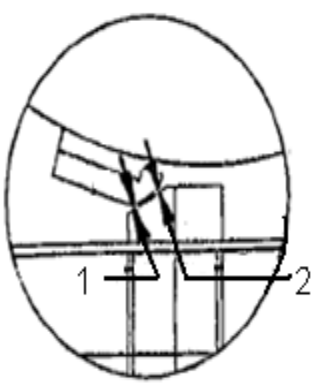

LS-1

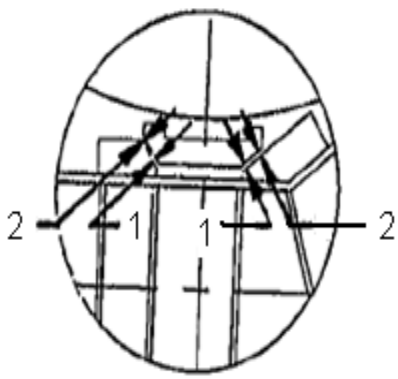

LS-2 & LS-3

LS-4 & LS-5

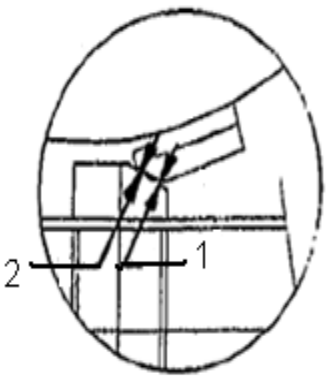

LS-6

Attachment 12
(Page 15 of 35)

REACTOR COOLANT SYSTEM COMPONENT SUPPORT PRE HOT FUNCTIONAL TEST AMBIENT TEMPERATURE <105°F DATA READINGS

Date _____

REACTOR COOLANT PUMP TIE ROD LAYOUT DETAILS

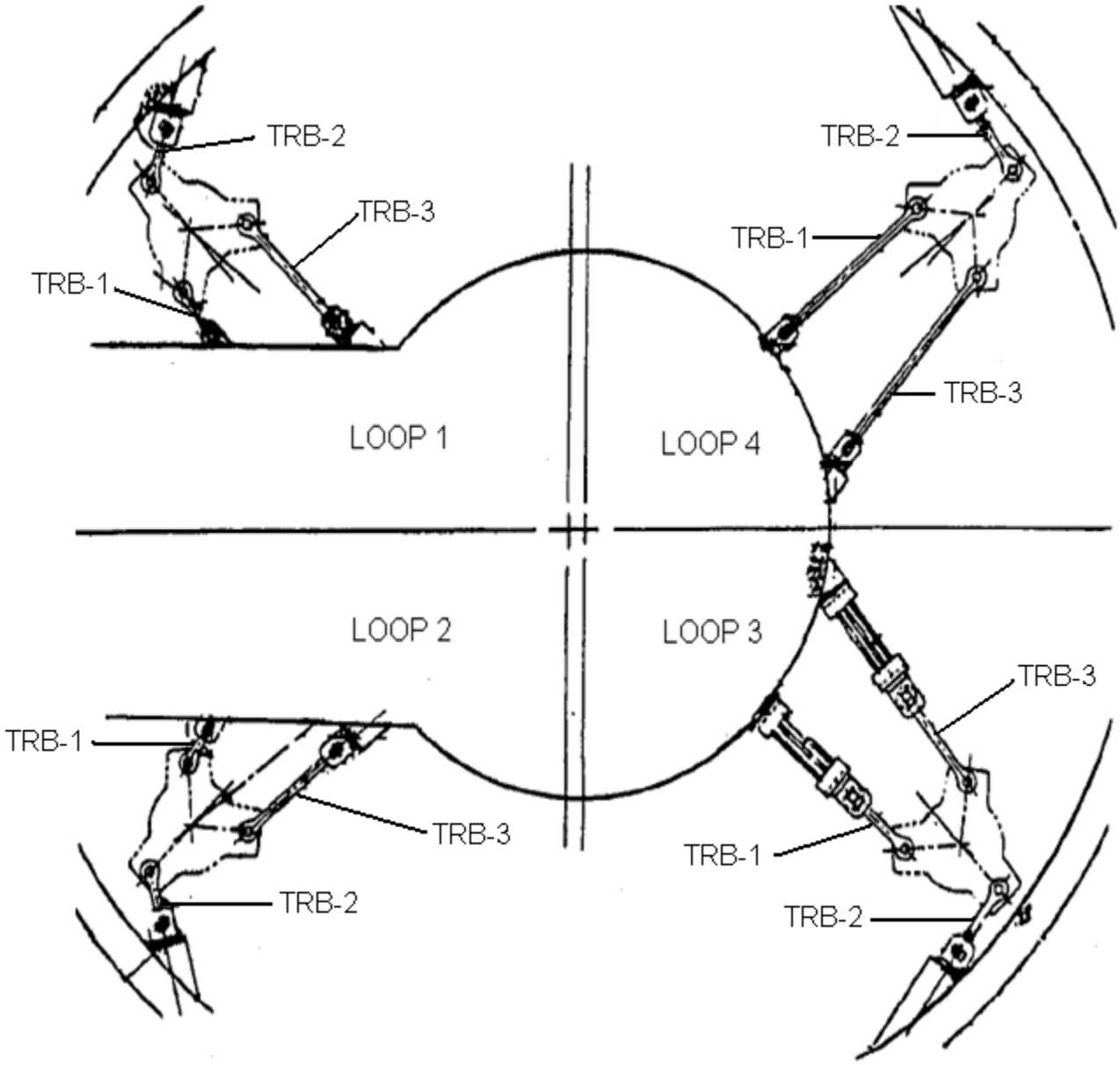

Attachment 12
(Page 16 of 35)

REACTOR COOLANT SYSTEM COMPONENT SUPPORT PRE HOT FUNCTIONAL TEST AMBIENT TEMPERATURE <105°F DATA READINGS

Date _____

REACTOR COOLANT PUMP TIE ROD DATA SHEET

RCP IDENTIFICATION RCP-1
DATE: _____
TIME: _____
INITIALS: _____
SYSTEM TEMP: _____

GAP MEASUREMENTS

GAP NO.		TIE ROD BRACKET IDENTIFICATION		
		TRB-1 (INSIDE)	TRB-2 (BACK)	TRB-3 (OUTSIDE)
TOP	1F			
	1B			
BOT	2F			
	2B			

NOTE

"F" is the front side (shimmed side) of the pin.

"B" is the back side (un-shimmed side) of the pin.

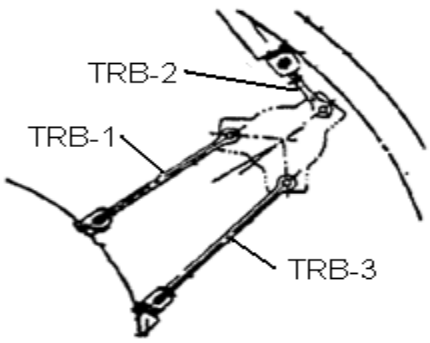

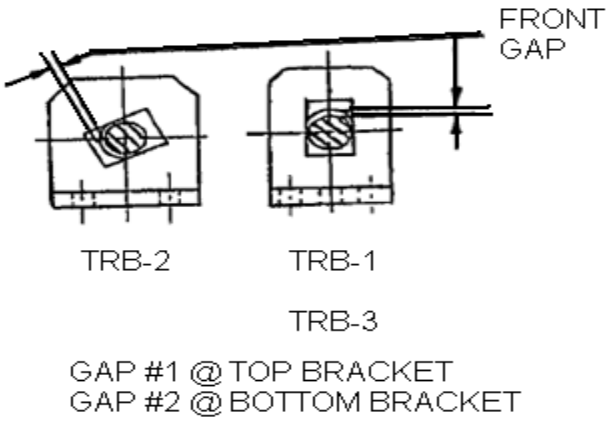

Attachment 12
(Page 17 of 35)

REACTOR COOLANT SYSTEM COMPONENT SUPPORT PRE HOT FUNCTIONAL TEST AMBIENT TEMPERATURE <105°F DATA READINGS

Date _____

REACTOR COOLANT PUMP TIE ROD DATA SHEET

RCP IDENTIFICATION RCP-2
DATE: _____
TIME: _____
INITIALS: _____
SYSTEM TEMP: _____

GAP MEASUREMENTS

GAP NO.		TIE ROD BRACKET IDENTIFICATION		
		TRB-1 (INSIDE)	TRB-2 (BACK)	TRB-3 (OUTSIDE)
TOP	1F			
	1B			
BOT	2F			
	2B			

NOTE

"F" is the front side (shimmed side) of the pin.

"B" is the back side (un-shimmed side) of the pin.

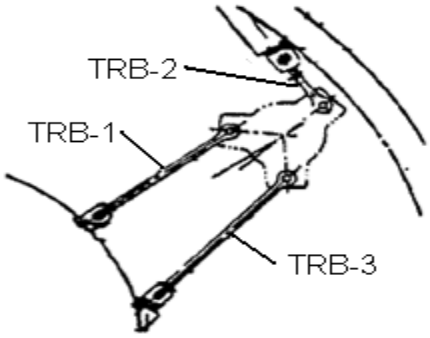

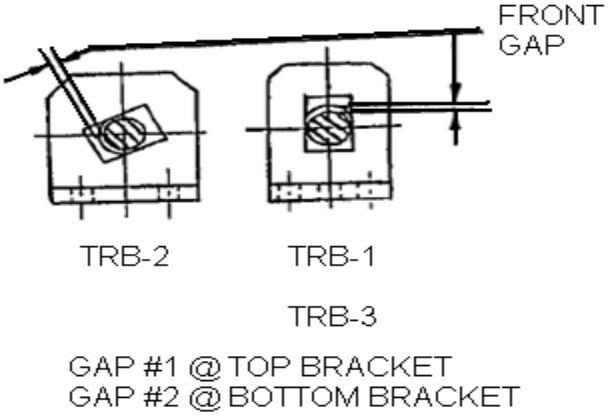

Attachment 12
(Page 18 of 35)

REACTOR COOLANT SYSTEM COMPONENT SUPPORT PRE HOT FUNCTIONAL TEST AMBIENT TEMPERATURE <105°F DATA READINGS

Date _____

REACTOR COOLANT PUMP TIE ROD DATA SHEET

RCP IDENTIFICATION RCP-3
DATE: _____
TIME: _____
INITIALS: _____
SYSTEM TEMP: _____

GAP MEASUREMENTS

GAP NO.		TIE ROD BRACKET IDENTIFICATION		
		TRB-1 (INSIDE)	TRB-2 (BACK)	TRB-3 (OUTSIDE)
TOP	1F			
	1B			
BOT	2F			
	2B			

NOTE

"F" is the front side (shimmed side) of the pin.

"B" is the back side (un-shimmed side) of the pin.

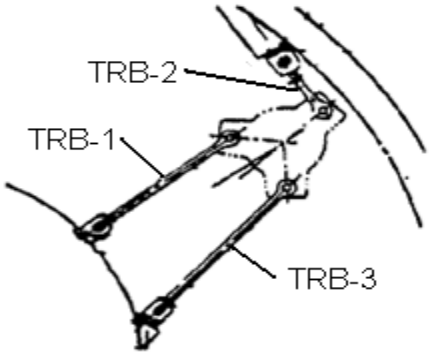

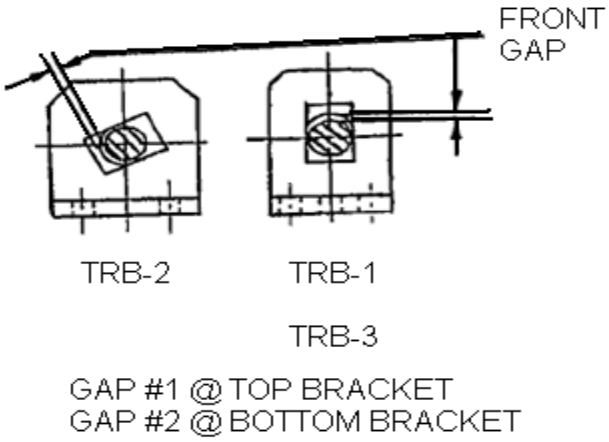

Attachment 12
(Page 19 of 35)

REACTOR COOLANT SYSTEM COMPONENT SUPPORT PRE HOT FUNCTIONAL TEST AMBIENT TEMPERATURE <105°F DATA READINGS

Date _____

REACTOR COOLANT PUMP TIE ROD DATA SHEET

RCP IDENTIFICATION RCP-4
DATE: _____
TIME: _____
INITIALS: _____
SYSTEM TEMP: _____

GAP MEASUREMENTS

GAP NO.		TIE ROD BRACKET IDENTIFICATION		
		TRB-1 (INSIDE)	TRB-2 (BACK)	TRB-3 (OUTSIDE)
TOP	1F			
	1B			
BOT	2F			
	2B			

NOTE

"F" is the front side (shimmed side) of the pin.

"B" is the back side (un-shimmed side) of the pin.

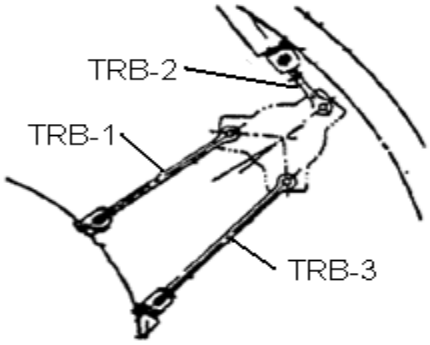

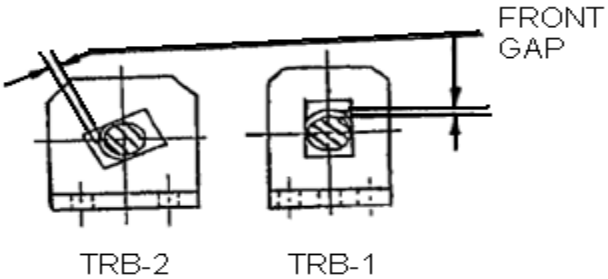

GAP #1 @ TOP BRACKET
GAP #2 @ BOTTOM BRACKET

Attachment 12
(Page 20 of 35)

REACTOR COOLANT SYSTEM COMPONENT SUPPORT PRE HOT FUNCTIONAL TEST AMBIENT TEMPERATURE <105°F DATA READINGS

Date _____

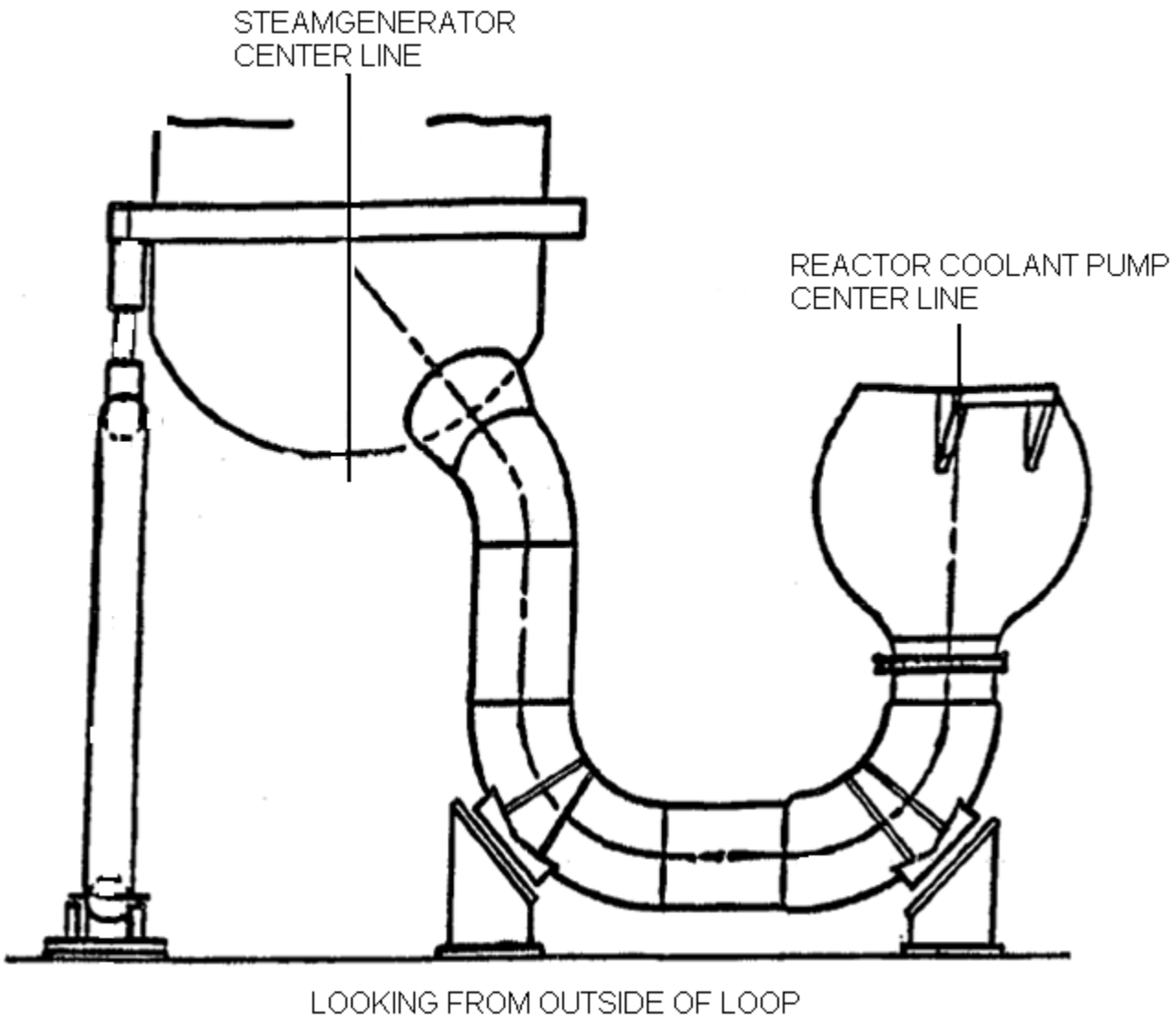

Attachment 12
(Page 21 of 35)

REACTOR COOLANT SYSTEM COMPONENT SUPPORT PRE HOT FUNCTIONAL TEST AMBIENT TEMPERATURE <105°F DATA READINGS

Date _____

CROSS OVER LEG ELBOW SUPPORT DATA SHEET

LOOP IDENTIFICATION 1
DATE: _____
TIME: _____
INITIALS: _____
SYSTEM TEMP: _____

GAP MEASUREMENTS

SUPPORT	GAP 1	GAP 2	GAP 3	GAP 4
XLSG				
XLRCP				

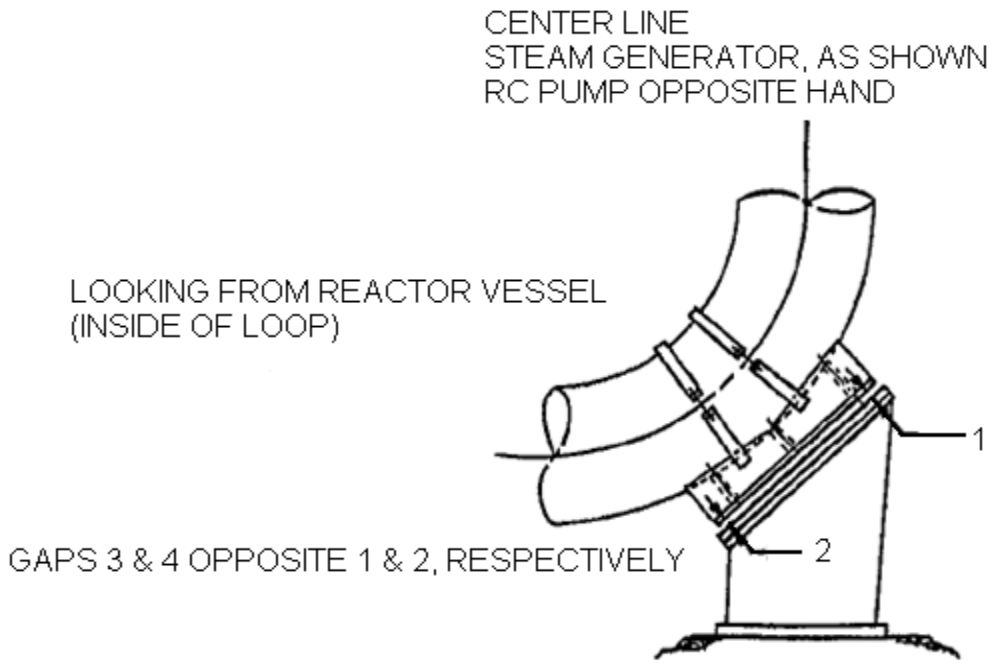

Attachment 12
(Page 22 of 35)

REACTOR COOLANT SYSTEM COMPONENT SUPPORT PRE HOT FUNCTIONAL TEST AMBIENT TEMPERATURE <105°F DATA READINGS

Date _____

CROSS OVER LEG ELBOW SUPPORT DATA SHEET

LOOP IDENTIFICATION 2
DATE: _____
TIME: _____
INITIALS: _____
SYSTEM TEMP: _____

GAP MEASUREMENTS

SUPPORT	GAP 1	GAP 2	GAP 3	GAP 4
XLSG				
XLRCP				

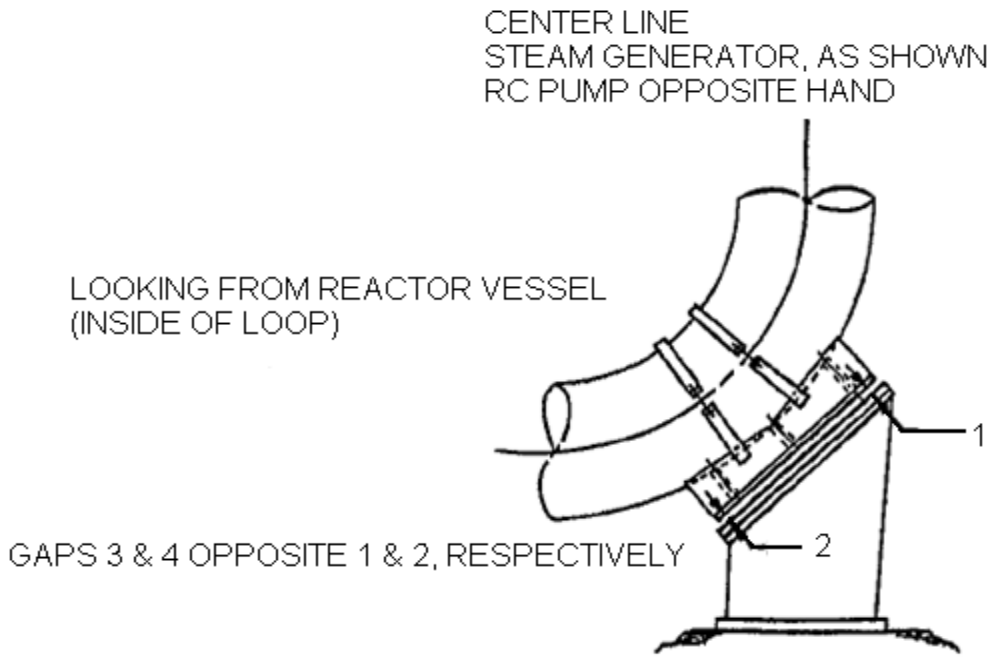

Attachment 12
(Page 23 of 35)

REACTOR COOLANT SYSTEM COMPONENT SUPPORT PRE HOT FUNCTIONAL TEST AMBIENT TEMPERATURE <105°F DATA READINGS

Date _____

CROSS OVER LEG ELBOW SUPPORT DATA SHEET

LOOP IDENTIFICATION 3
DATE: _____
TIME: _____
INITIALS: _____
SYSTEM TEMP: _____

GAP MEASUREMENTS

SUPPORT	GAP 1	GAP 2	GAP 3	GAP 4
XLSG				
XLRCP				

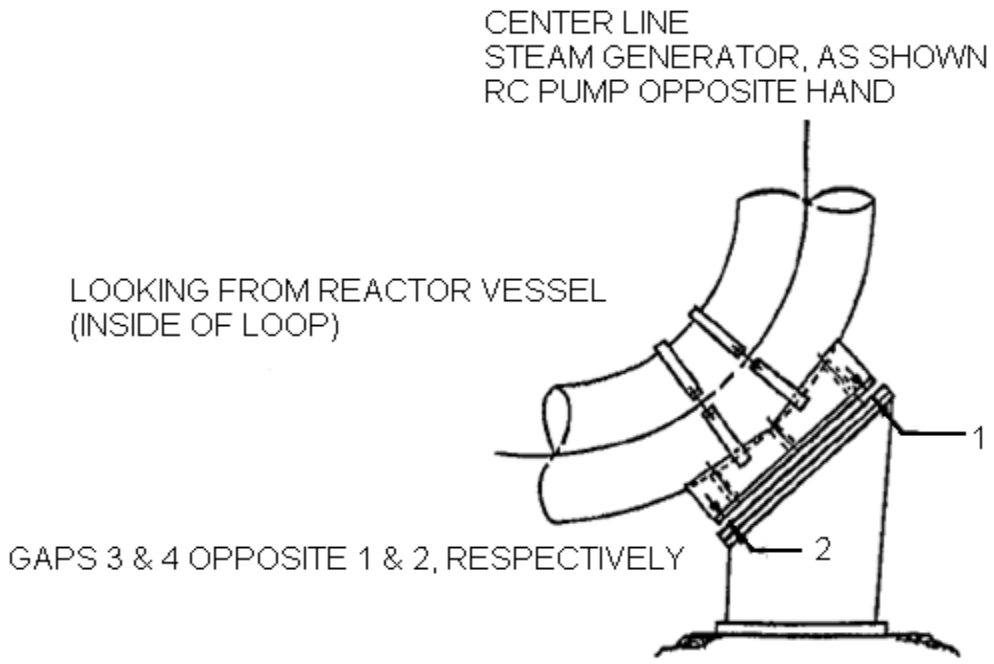

Attachment 12
(Page 24 of 35)

REACTOR COOLANT SYSTEM COMPONENT SUPPORT PRE HOT FUNCTIONAL TEST AMBIENT TEMPERATURE <105°F DATA READINGS

Date _____

CROSS OVER LEG ELBOW SUPPORT DATA SHEET

LOOP IDENTIFICATION 4
DATE: _____
TIME: _____
INITIALS: _____
SYSTEM TEMP: _____

GAP MEASUREMENTS

SUPPORT	GAP 1	GAP 2	GAP 3	GAP 4
XLSG				
XLRCP				

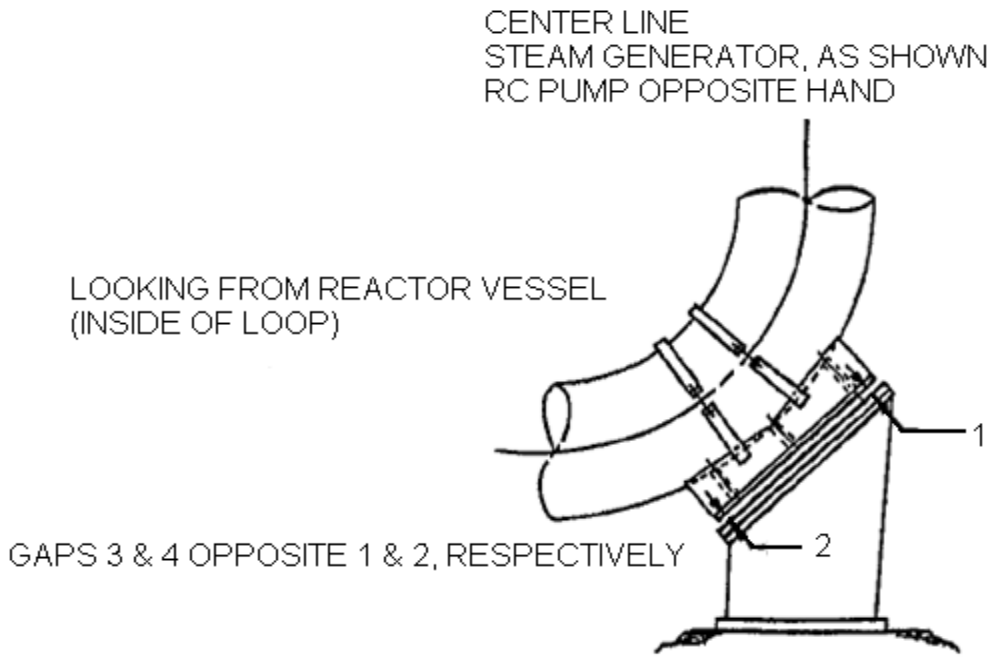

Attachment 12
(Page 25 of 35)

REACTOR COOLANT SYSTEM COMPONENT SUPPORT PRE HOT FUNCTIONAL TEST AMBIENT TEMPERATURE <105°F DATA READINGS

Date _____

PRESSURIZER UPPER SUPPORTS LAYOUT DETAILS

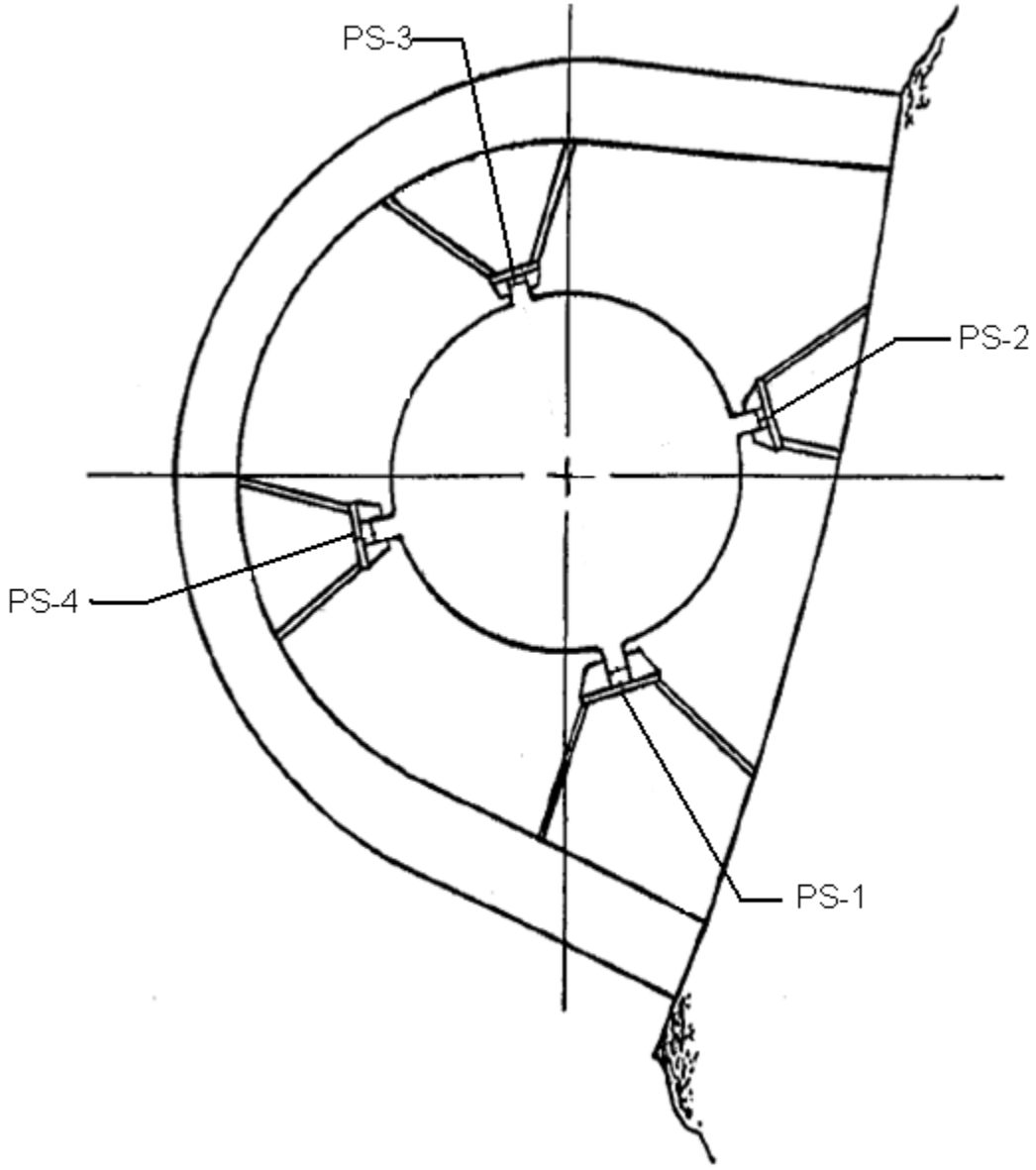

Attachment 12
(Page 26 of 35)

REACTOR COOLANT SYSTEM COMPONENT SUPPORT PRE HOT FUNCTIONAL TEST AMBIENT TEMPERATURE <105°F DATA READINGS

Date _____

PRESSURIZER UPPER SUPPORT DATA SHEET

DATE: _____
TIME: _____
INITIALS: _____
SYSTEM TEMP: _____

GAP MEASUREMENTS

GAP NO.	BUMPER IDENTIFICATION			
	PS-1	PS-2	PS-3	PS-4
1				
2				
3				
4				
5				
6				
7				
8				

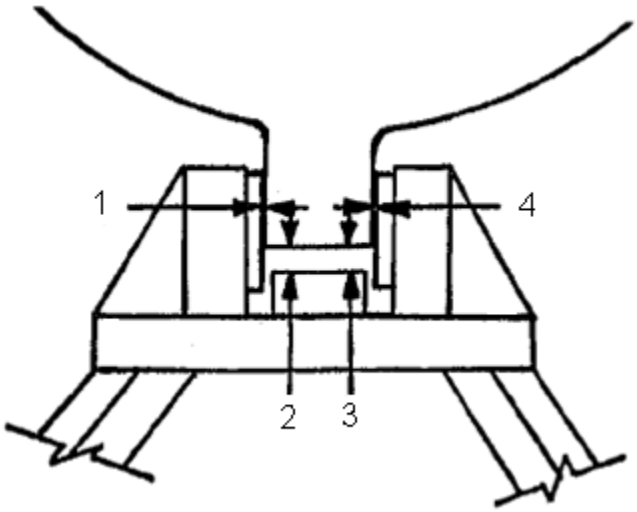

Attachment 12
(Page 27 of 35)

REACTOR COOLANT SYSTEM COMPONENT SUPPORT PRE HOT FUNCTIONAL TEST AMBIENT TEMPERATURE <105°F DATA READINGS

Date _____

GENERAL LAYOUT OF STEAM GENERATORS AND REACTOR COOLANT PUMPS

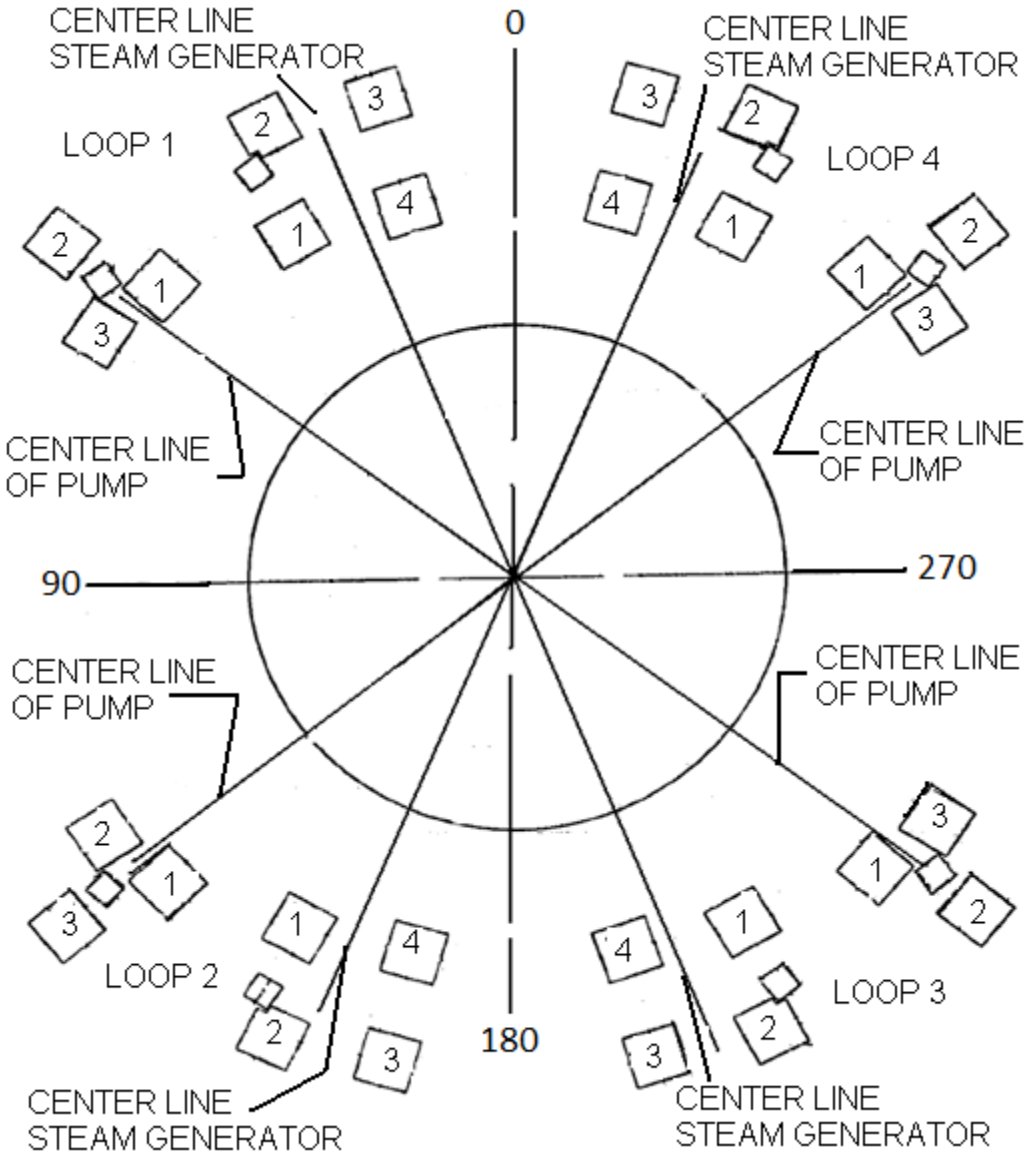

Attachment 12
(Page 28 of 35)

REACTOR COOLANT SYSTEM COMPONENT SUPPORT PRE HOT FUNCTIONAL TEST AMBIENT TEMPERATURE <105°F DATA READINGS

Date _____

REACTOR COOLANT PUMP COLUMN DATA SHEET

RCP IDENTIFICATION RCP-1
DATE: _____
TIME: _____
INITIALS: _____
SYSTEM TEMP: _____

GAP NO.		COLUMNS		
		1	2	3
FRONT OR BACK	1			
SIDE	2			

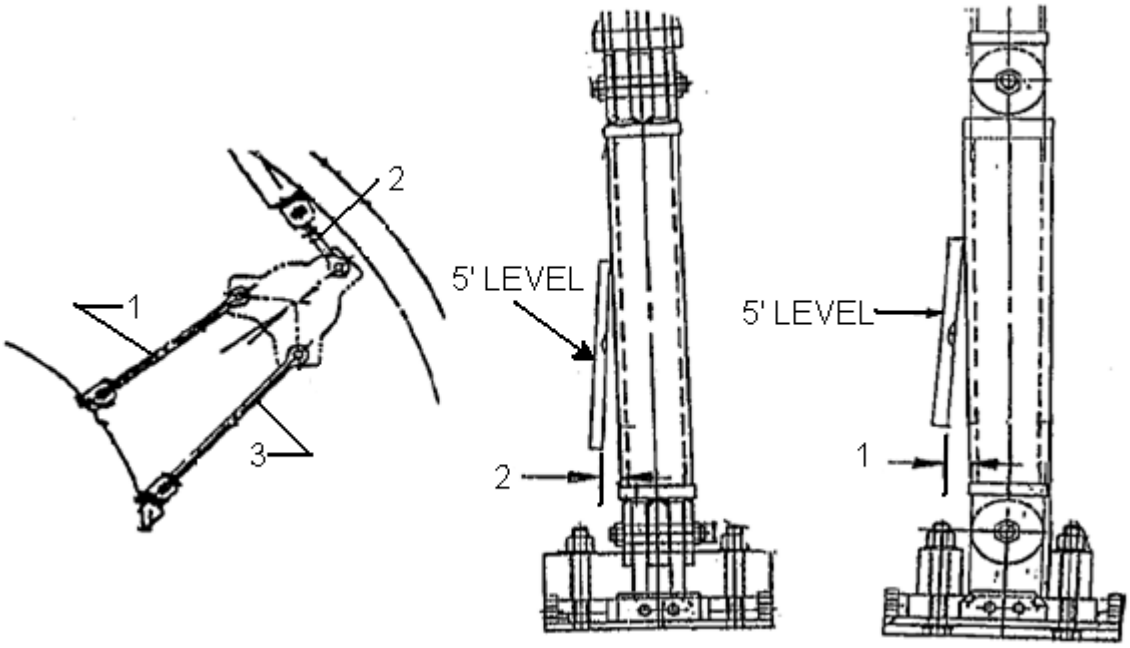

Attachment 12
(Page 29 of 35)

REACTOR COOLANT SYSTEM COMPONENT SUPPORT PRE HOT FUNCTIONAL TEST AMBIENT TEMPERATURE <105°F DATA READINGS

Date _____

REACTOR COOLANT PUMP COLUMN DATA SHEET

RCP IDENTIFICATION RCP-2
DATE: _____
TIME: _____
INITIALS: _____
SYSTEM TEMP: _____

GAP NO.		COLUMNS		
		1	2	3
FRONT OR BACK	1			
SIDE	2			

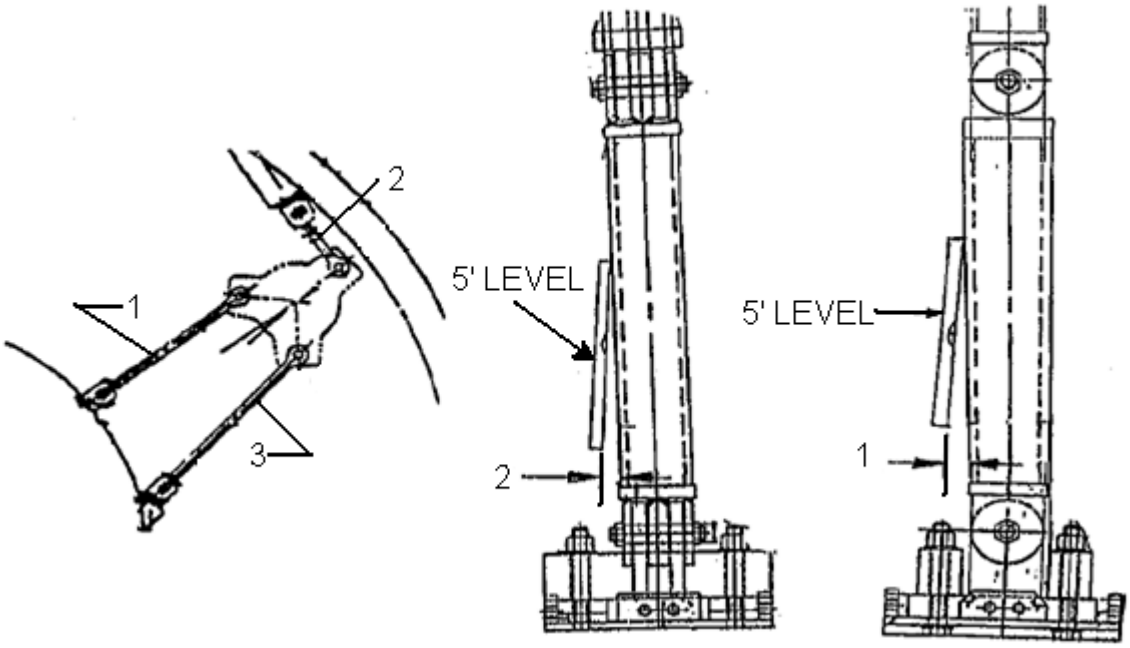

Attachment 12
(Page 30 of 35)

REACTOR COOLANT SYSTEM COMPONENT SUPPORT PRE HOT FUNCTIONAL TEST AMBIENT TEMPERATURE <105°F DATA READINGS

Date _____

REACTOR COOLANT PUMP COLUMN DATA SHEET

RCP IDENTIFICATION RCP-3
DATE: _____
TIME: _____
INITIALS: _____
SYSTEM TEMP: _____

GAP NO.		COLUMNS		
		1	2	3
FRONT OR BACK	1			
SIDE	2			

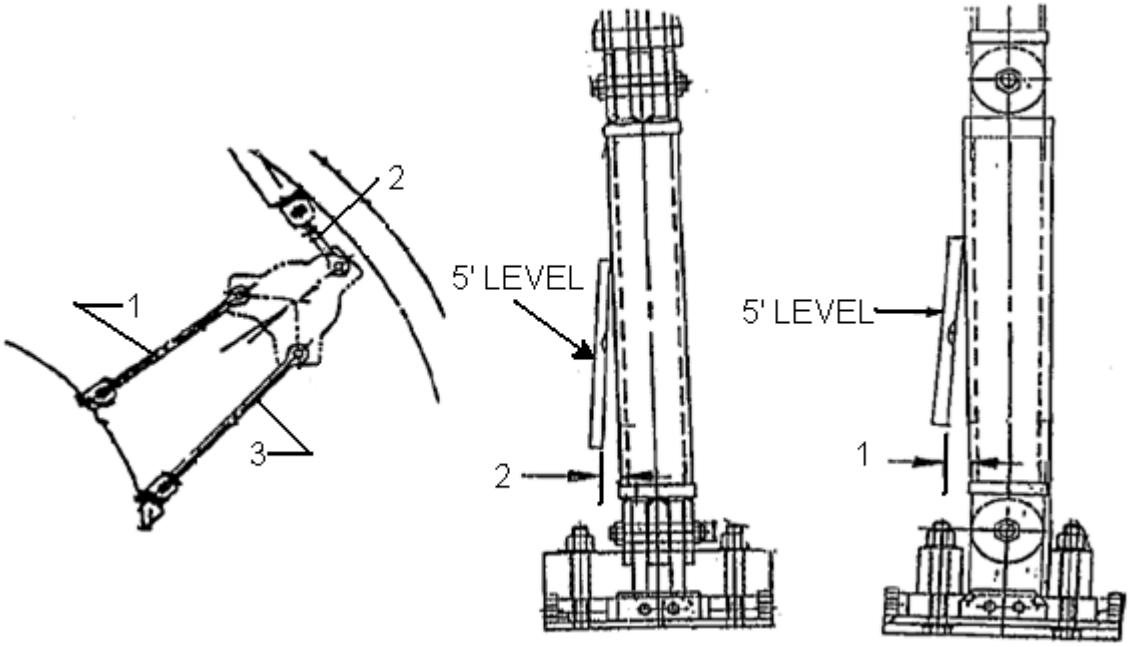

Attachment 12
(Page 31 of 35)

REACTOR COOLANT SYSTEM COMPONENT SUPPORT PRE HOT FUNCTIONAL TEST AMBIENT TEMPERATURE <105°F DATA READINGS

Date _____

REACTOR COOLANT PUMP COLUMN DATA SHEET

RCP IDENTIFICATION RCP-4
DATE: _____
TIME: _____
INITIALS: _____
SYSTEM TEMP: _____

GAP NO.		COLUMNS		
		1	2	3
FRONT OR BACK	1			
SIDE	2			

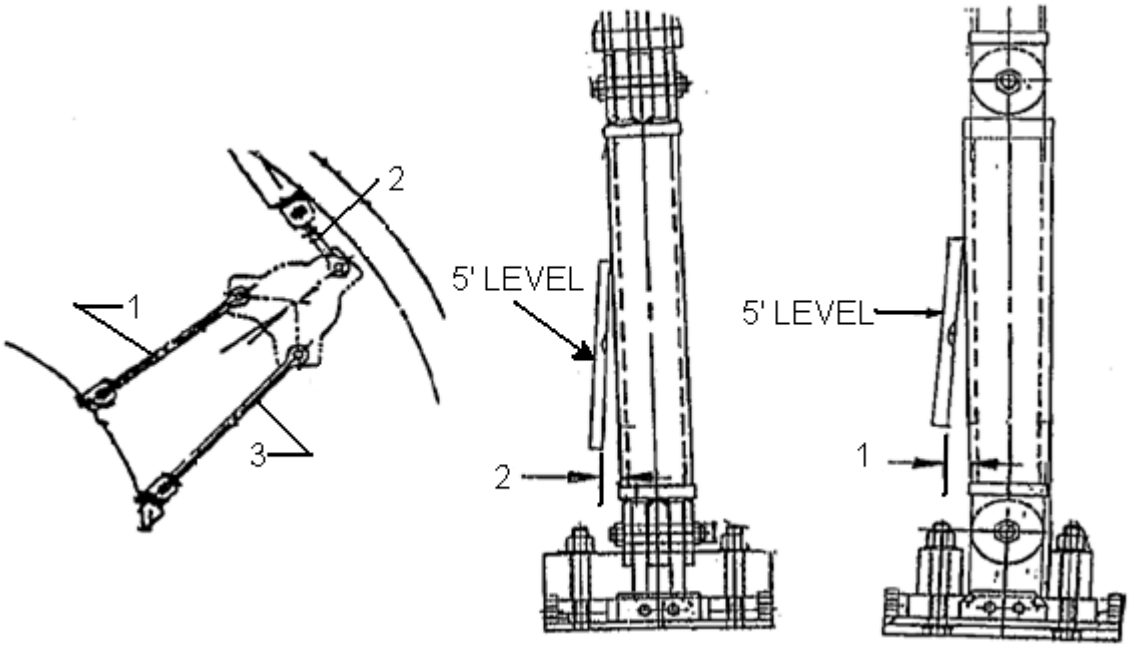

Attachment 12
(Page 32 of 35)

REACTOR COOLANT SYSTEM COMPONENT SUPPORT PRE HOT FUNCTIONAL TEST AMBIENT TEMPERATURE <105°F DATA READINGS

Date _____

STEAM GENERATOR COLUMN DATA SHEET

SG IDENTIFICATION SG-1
DATE: _____
TIME: _____
INITIALS: _____
SYSTEM TEMP: _____

GAP NO.		COLUMNS			
		1	2	3	4
FRONT OR BACK	1				
SIDE	2				

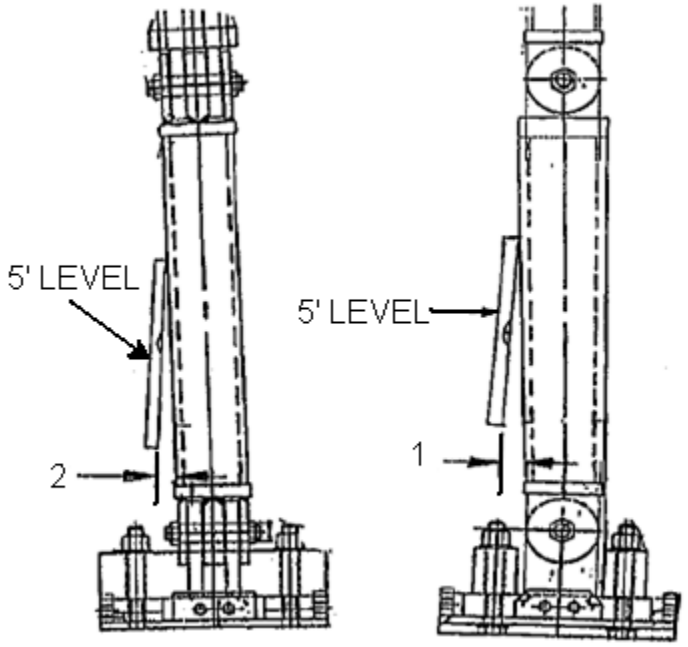

Attachment 12
(Page 33 of 35)

REACTOR COOLANT SYSTEM COMPONENT SUPPORT PRE HOT FUNCTIONAL TEST AMBIENT TEMPERATURE <105°F DATA READINGS

Date _____

STEAM GENERATOR COLUMN DATA SHEET

SG IDENTIFICATION SG-2
DATE: _____
TIME: _____
INITIALS: _____
SYSTEM TEMP: _____

GAP NO.		COLUMNS			
		1	2	3	4
FRONT OR BACK	1				
SIDE	2				

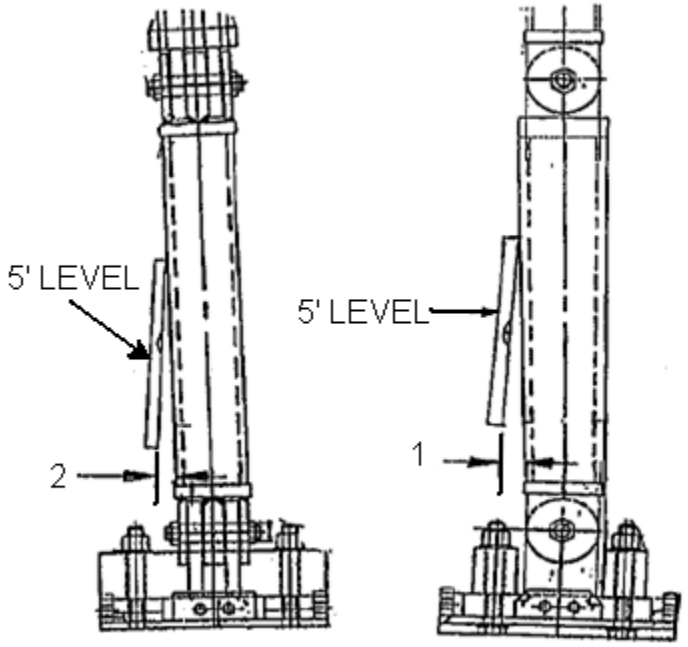

Attachment 12
(Page 34 of 35)

REACTOR COOLANT SYSTEM COMPONENT SUPPORT PRE HOT FUNCTIONAL TEST AMBIENT TEMPERATURE <105°F DATA READINGS

Date _____

STEAM GENERATOR COLUMN DATA SHEET

SG IDENTIFICATION SG-3
DATE: _____
TIME: _____
INITIALS: _____
SYSTEM TEMP: _____

GAP NO.		COLUMNS			
		1	2	3	4
FRONT OR BACK	1				
SIDE	2				

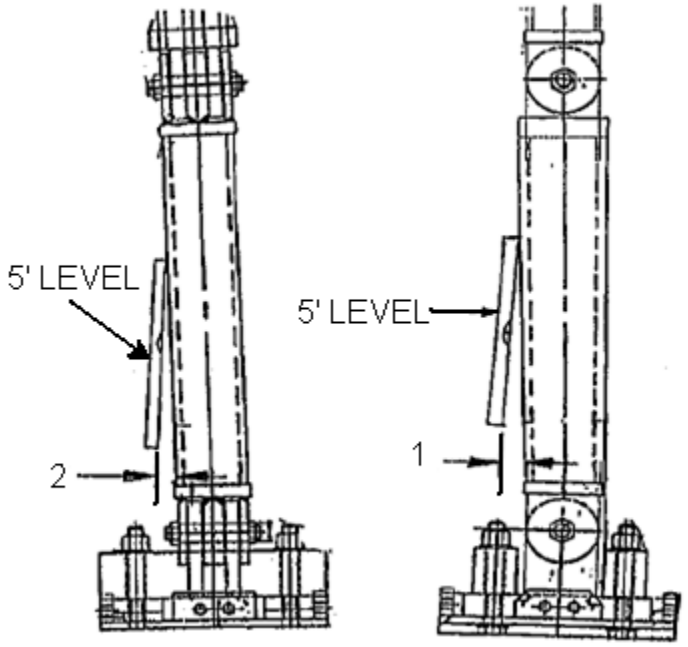

Attachment 12
(Page 35 of 35)

REACTOR COOLANT SYSTEM COMPONENT SUPPORT PRE HOT FUNCTIONAL TEST AMBIENT TEMPERATURE <105°F DATA READINGS

Date _____

STEAM GENERATOR COLUMN DATA SHEET

SG IDENTIFICATION SG-4
DATE: _____
TIME: _____
INITIALS: _____
SYSTEM TEMP: _____

GAP NO.		COLUMNS			
		1	2	3	4
FRONT OR BACK	1				
SIDE	2				

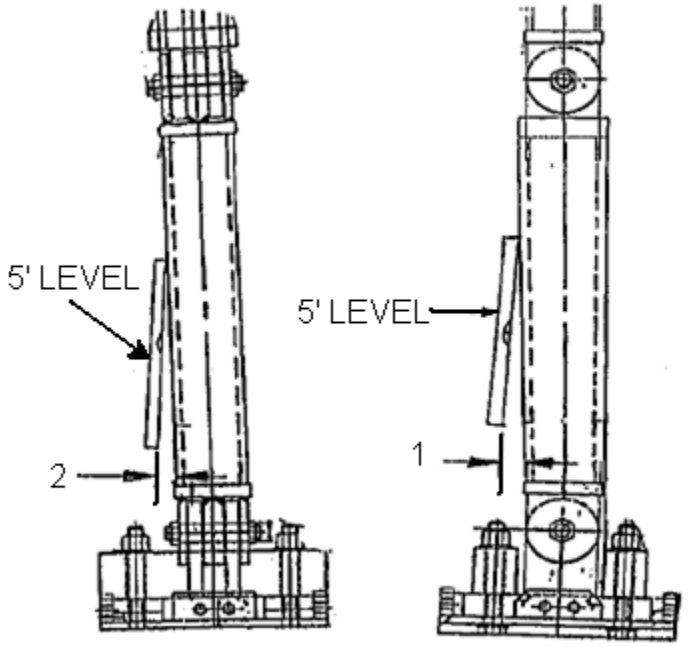

Attachment 13
(Page 1 of 35)

REACTOR COOLANT SYSTEM COMPONENT SUPPORT HOT FUNCTIONAL TEST 250° (245°-255°) TEMPERATURE DATA READINGS

Date _____

STEAM GENERATOR UPPER SUPPORT LAYOUT DETAIL

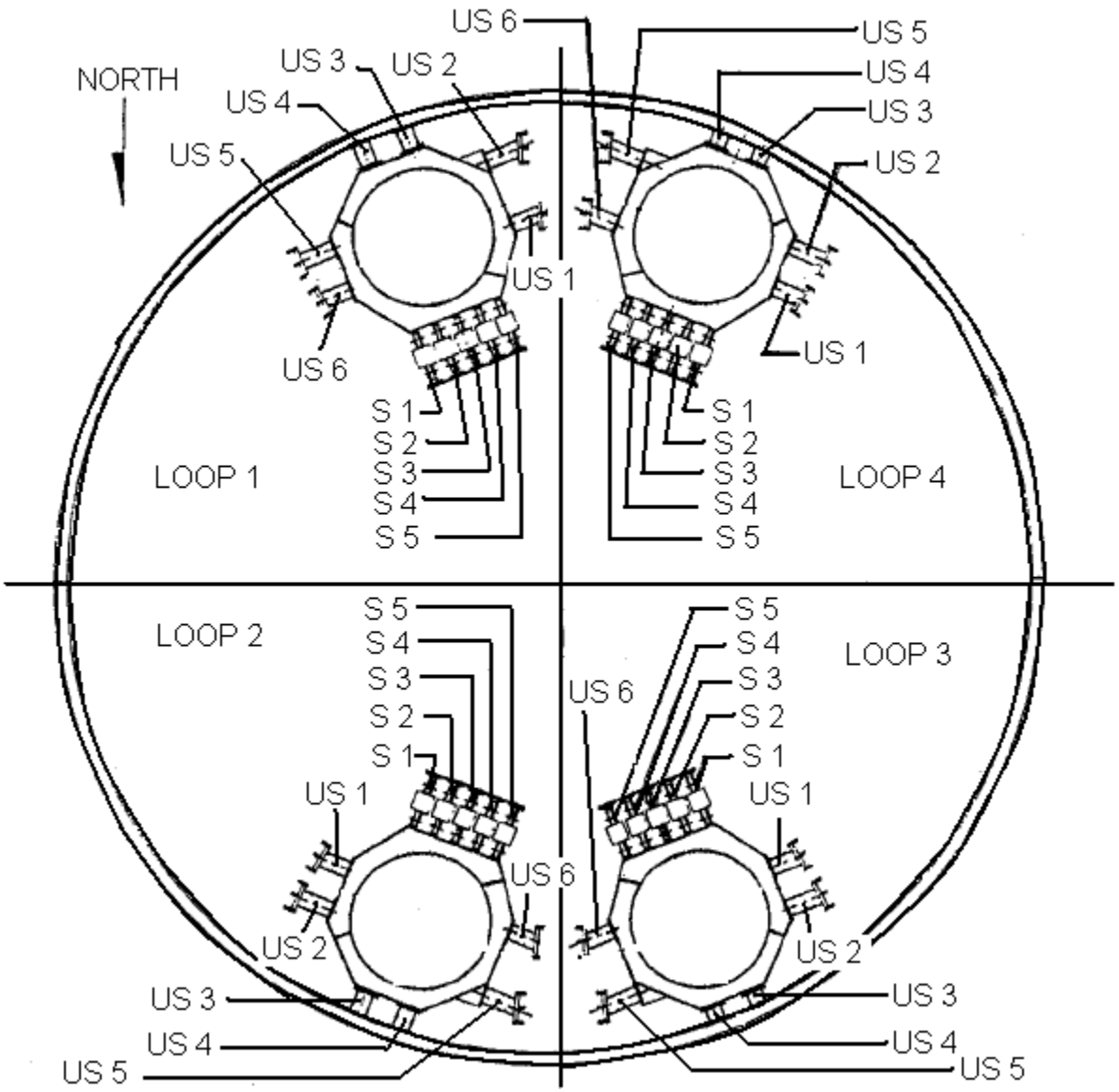

Attachment 13
(Page 2 of 35)

REACTOR COOLANT SYSTEM COMPONENT SUPPORT HOT FUNCTIONAL TEST 250° (245°-255°) TEMPERATURE DATA READINGS

Date _____

STEAM GENERATOR UPPER SUPPORT DYNAMIC SNUBBERS DATA SHEET

SG IDENTIFICATION SG-1
INITIALS: _____
SYSTEM TEMP: _____

ROD MEASUREMENT "A"

DATE	TIME	DYNAMIC SNUBBERS IDENTIFICATION				
		S-1	S-2	S-3	S-4	S-5

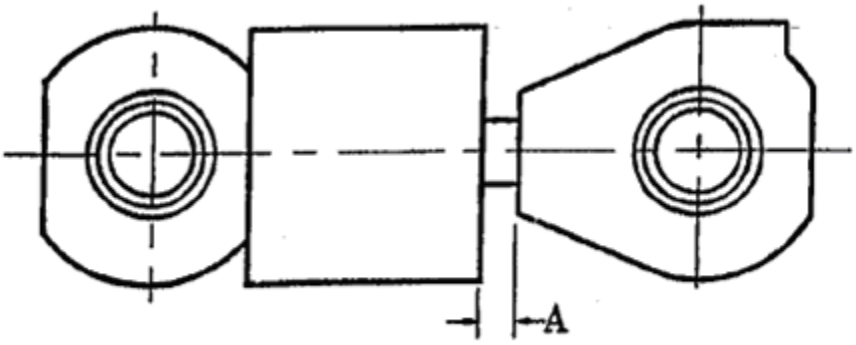

Attachment 13
(Page 3 of 35)

REACTOR COOLANT SYSTEM COMPONENT SUPPORT HOT FUNCTIONAL TEST 250° (245°-255°) TEMPERATURE DATA READINGS

Date _____

STEAM GENERATOR UPPER SUPPORT DYNAMIC SNUBBERS DATA SHEET

SG IDENTIFICATION SG-2
INITIALS: _____
SYSTEM TEMP: _____

ROD MEASUREMENT "A"

DATE	TIME	DYNAMIC SNUBBERS IDENTIFICATION				
		S-1	S-2	S-3	S-4	S-5

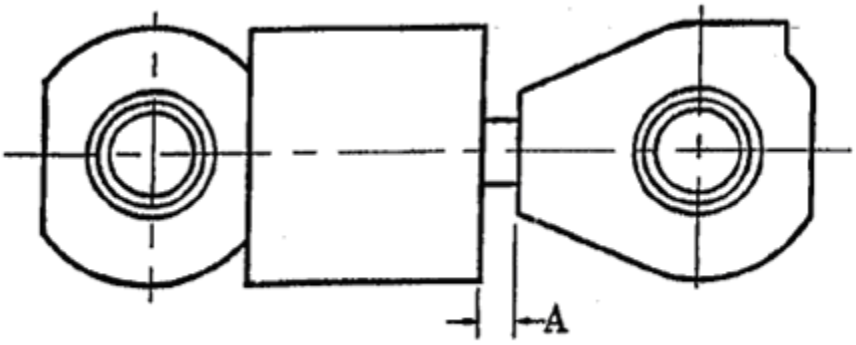

Attachment 13
(Page 4 of 35)

REACTOR COOLANT SYSTEM COMPONENT SUPPORT HOT FUNCTIONAL TEST 250° (245°-255°) TEMPERATURE DATA READINGS

Date _____

TEAM GENERATOR UPPER SUPPORT DYNAMIC SNUBBERS DATA SHEET

SG IDENTIFICATION SG-3
INITIALS: _____
SYSTEM TEMP: _____

ROD MEASUREMENT "A"

DATE	TIME	DYNAMIC SNUBBERS IDENTIFICATION				
		S-1	S-2	S-3	S-4	S-5

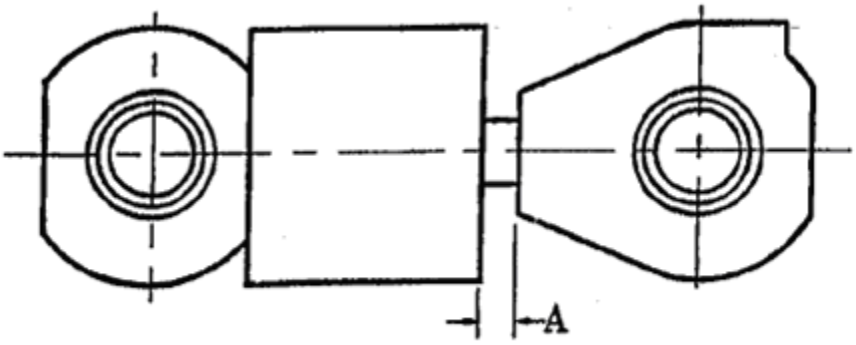

Attachment 13
(Page 5 of 35)

REACTOR COOLANT SYSTEM COMPONENT SUPPORT HOT FUNCTIONAL TEST 250° (245°-255°) TEMPERATURE DATA READINGS

Date _____

STEAM GENERATOR UPPER SUPPORT DYNAMIC SNUBBERS DATA SHEET

SG IDENTIFICATION SG-4
INITIALS: _____
SYSTEM TEMP: _____

ROD MEASUREMENT "A"

DATE	TIME	DYNAMIC SNUBBERS IDENTIFICATION				
		S-1	S-2	S-3	S-4	S-5

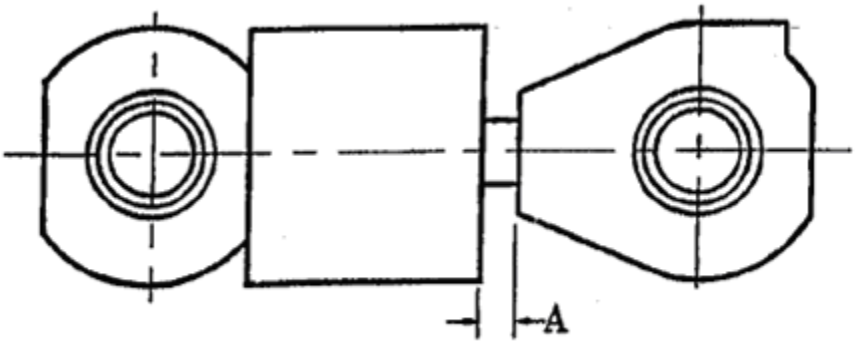

Attachment 13
(Page 6 of 35)

REACTOR COOLANT SYSTEM COMPONENT SUPPORT HOT FUNCTIONAL TEST 250° (245°-255°) TEMPERATURE DATA READINGS

Date _____

STEAM GENERATOR UPPER SUPPORT DATA SHEET

SG IDENTIFICATION SG-1
DATE: _____
TIME: _____
INITIALS: _____
SYSTEM TEMP: _____

GAP MEASUREMENTS

GAP NO.	BUMPER IDENTIFICATION					
	US-1	US-2	US-3	US-4	US-5	US-6
1						
2						
3						
4						

NOTE

Visual inspection only for US-1, US-2, US-5 and US-6. Record as “SAT” (Satisfactory) or “UNSAT” (Unsatisfactory for gap 1. If “UNSAT” is recorded, give brief description of condition in box provided (gaps 2, 3, and 4).

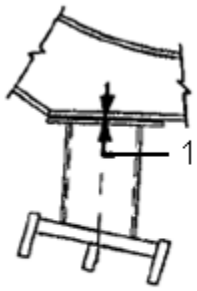

US-1 & US-2

US-5 & US-6

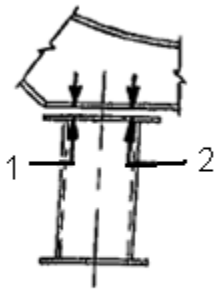

US-3 & US-4

Attachment 13
(Page 7 of 35)

REACTOR COOLANT SYSTEM COMPONENT SUPPORT HOT FUNCTIONAL TEST 250° (245°-255°) TEMPERATURE DATA READINGS

Date _____

STEAM GENERATOR UPPER SUPPORT DATA SHEET

SG IDENTIFICATION SG-2
DATE: _____
TIME: _____
INITIALS: _____
SYSTEM TEMP: _____

GAP MEASUREMENTS

GAP NO.	BUMPER IDENTIFICATION					
	US-1	US-2	US-3	US-4	US-5	US-6
1						
2						
3						
4						

NOTE

Visual inspection only for US-1, US-2, US-5 and US-6. Record as “SAT” (Satisfactory) or “UNSAT” (Unsatisfactory for gap 1. If “UNSAT” is recorded, give brief description of condition in box provided (gaps 2, 3, and 4).

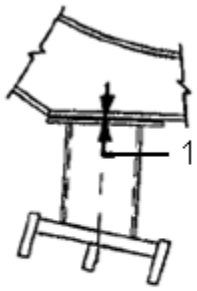

US-1 & US-2

US-5 & US-6

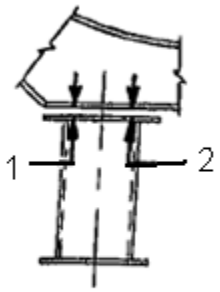

US-3 & US-4

Attachment 13
(Page 8 of 35)

REACTOR COOLANT SYSTEM COMPONENT SUPPORT HOT FUNCTIONAL TEST 250° (245°-255°) TEMPERATURE DATA READINGS

Date _____

STEAM GENERATOR UPPER SUPPORT DATA SHEET

SG IDENTIFICATION SG-3
DATE: _____
TIME: _____
INITIALS: _____
SYSTEM TEMP: _____

GAP MEASUREMENTS

GAP NO.	BUMPER IDENTIFICATION					
	US-1	US-2	US-3	US-4	US-5	US-6
1						
2						
3						
4						

NOTE

Visual inspection only for US-1, US-2, US-5 and US-6. Record as “SAT” (Satisfactory) or “UNSAT” (Unsatisfactory for gap 1. If “UNSAT” is recorded, give brief description of condition in box provided (gaps 2, 3, and 4).

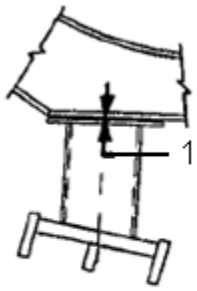

US-1 & US-2

US-5 & US-6

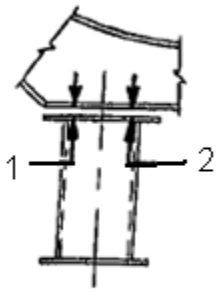

US-3 & US-4

Attachment 13
(Page 9 of 35)

REACTOR COOLANT SYSTEM COMPONENT SUPPORT HOT FUNCTIONAL TEST 250° (245°-255°) TEMPERATURE DATA READINGS

Date _____

STEAM GENERATOR UPPER SUPPORT DATA SHEET

SG IDENTIFICATION SG-4
DATE: _____
TIME: _____
INITIALS: _____
SYSTEM TEMP: _____

GAP MEASUREMENTS

GAP NO.	BUMPER IDENTIFICATION					
	US-1	US-2	US-3	US-4	US-5	US-6
1						
2						
3						
4						

NOTE

Visual inspection only for US-1, US-2, US-5 and US-6. Record as “SAT” (Satisfactory) or “UNSAT” (Unsatisfactory for gap 1. If “UNSAT” is recorded, give brief description of condition in box provided (gaps 2, 3, and 4).

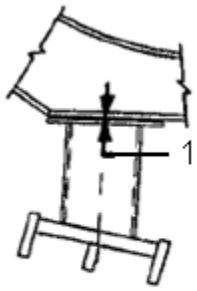

US-1 & US-2

US-5 & US-6

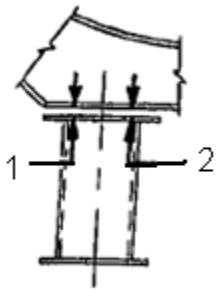

US-3 & US-4

Attachment 13
(Page 10 of 35)

REACTOR COOLANT SYSTEM COMPONENT SUPPORT HOT FUNCTIONAL TEST 250° (245°-255°) TEMPERATURE DATA READINGS

Date _____

STEAM GENERATOR LOWER SUPPORT LAYOUT DETAILS

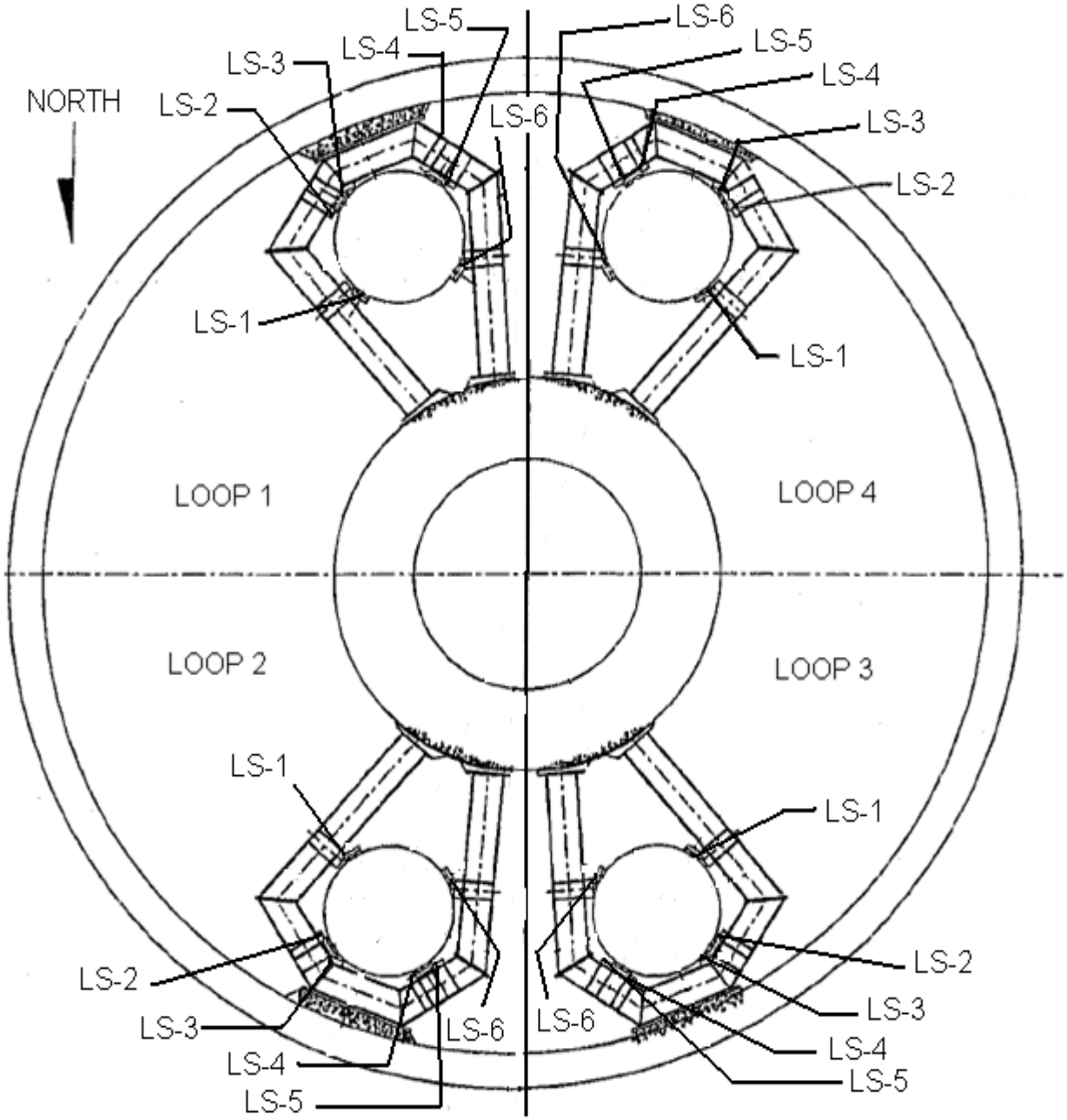

Attachment 13
(Page 11 of 35)

REACTOR COOLANT SYSTEM COMPONENT SUPPORT HOT FUNCTIONAL TEST 250° (245°-255°) TEMPERATURE DATA READINGS

Date _____

STEAM GENERATOR LOWER SUPPORT DATA SHEET

SG IDENTIFICATION SG-1
DATE: _____
TIME: _____
INITIALS: _____
SYSTEM TEMP: _____

GAP MEASUREMENTS

GAP NO.	BUMPER IDENTIFICATION					
	LS-1	LS-2	LS-3	LS-4	LS-5	LS-6
1						
2						
3						
4						

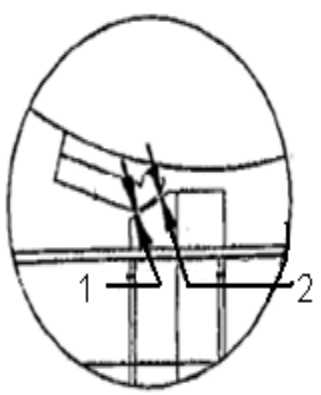

LS-1

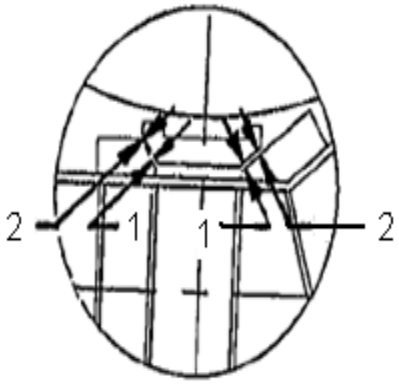

LS-2 & LS-3

LS-4 & LS-5

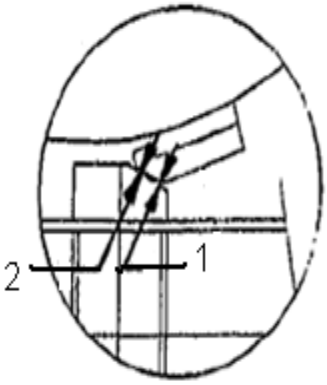

LS-6

Attachment 13
(Page 12 of 35)

REACTOR COOLANT SYSTEM COMPONENT SUPPORT HOT FUNCTIONAL TEST 250° (245°-255°) TEMPERATURE DATA READINGS

Date _____

STEAM GENERATOR LOWER SUPPORT DATA SHEET

SG IDENTIFICATION SG-2
DATE: _____
TIME: _____
INITIALS: _____
SYSTEM TEMP: _____

GAP MEASUREMENTS

GAP NO.	BUMPER IDENTIFICATION					
	LS-1	LS-2	LS-3	LS-4	LS-5	LS-6
1						
2						
3						
4						

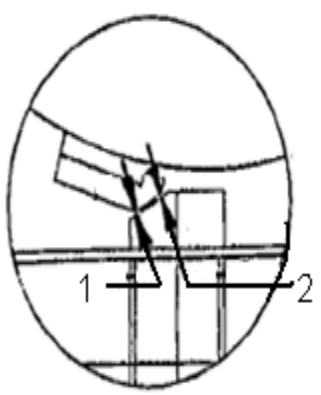

LS-1

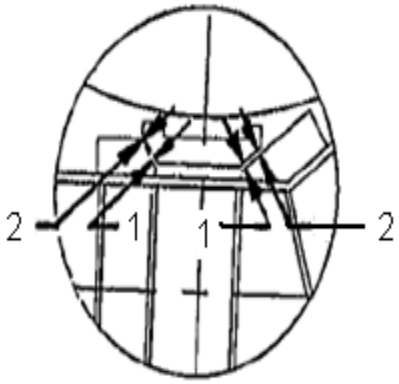

LS-2 & LS-3

LS-4 & LS-5

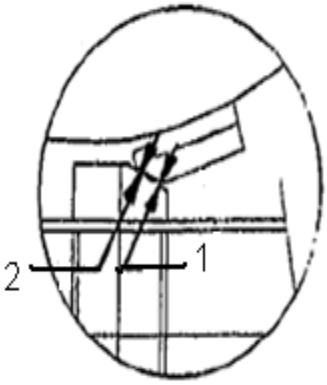

LS-6

Attachment 13
(Page 13 of 35)

REACTOR COOLANT SYSTEM COMPONENT SUPPORT HOT FUNCTIONAL TEST 250° (245°-255°) TEMPERATURE DATA READINGS

Date _____

STEAM GENERATOR LOWER SUPPORT DATA SHEET

SG IDENTIFICATION SG-3
DATE: _____
TIME: _____
INITIALS: _____
SYSTEM TEMP: _____

GAP MEASUREMENTS

GAP NO.	BUMPER IDENTIFICATION					
	LS-1	LS-2	LS-3	LS-4	LS-5	LS-6
1						
2						
3						
4						

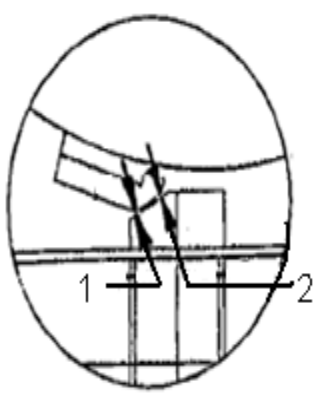

LS-1

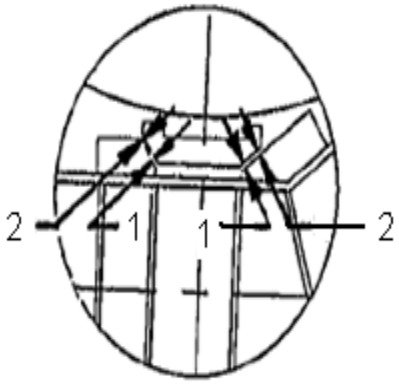

LS-2 & LS-3

LS-4 & LS-5

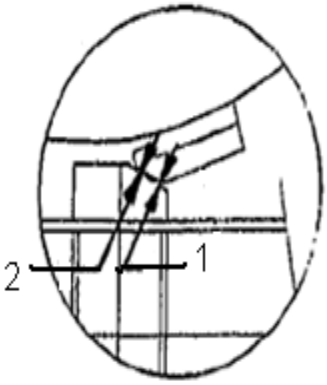

LS-6

Attachment 13
(Page 14 of 35)

REACTOR COOLANT SYSTEM COMPONENT SUPPORT HOT FUNCTIONAL TEST 250° (245°-255°) TEMPERATURE DATA READINGS

Date _____

STEAM GENERATOR LOWER SUPPORT DATA SHEET

SG IDENTIFICATION SG-4
DATE: _____
TIME: _____
INITIALS: _____
SYSTEM TEMP: _____

GAP MEASUREMENTS

GAP NO.	BUMPER IDENTIFICATION					
	LS-1	LS-2	LS-3	LS-4	LS-5	LS-6
1						
2						
3						
4						

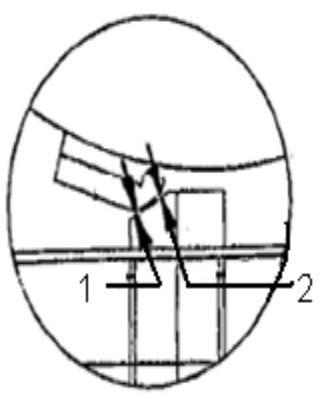

LS-1

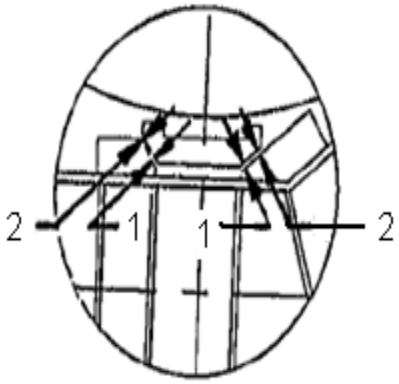

LS-2 & LS-3

LS-4 & LS-5

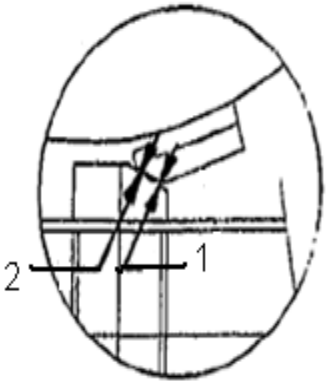

LS-6

Attachment 13
(Page 15 of 35)

REACTOR COOLANT SYSTEM COMPONENT SUPPORT HOT FUNCTIONAL TEST 250° (245°-255°) TEMPERATURE DATA READINGS

Date _____

REACTOR COOLANT PUMP TIE ROD LAYOUT DETAILS

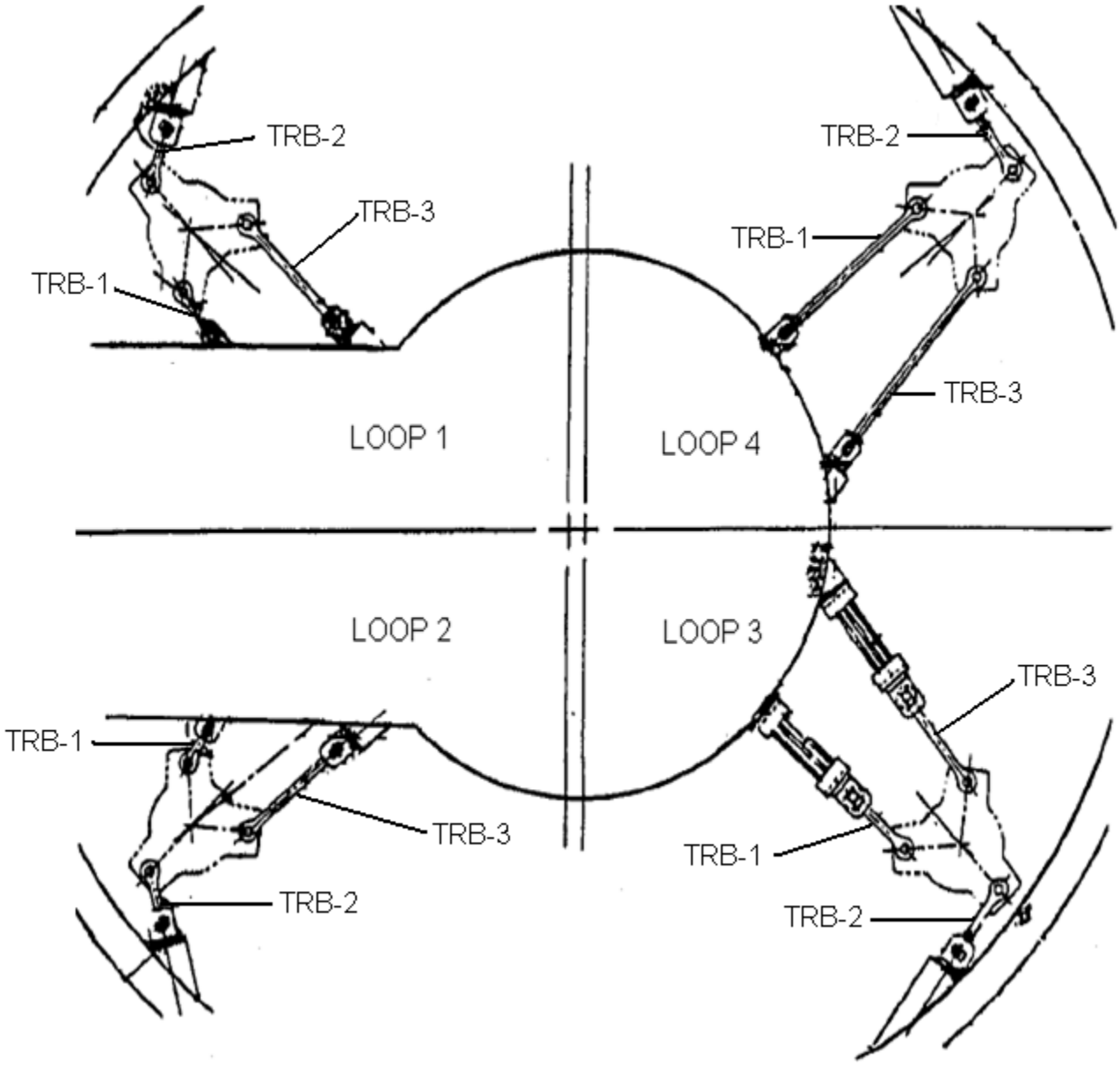

Attachment 13
(Page 16 of 35)

REACTOR COOLANT SYSTEM COMPONENT SUPPORT HOT FUNCTIONAL TEST 250° (245°-255°) TEMPERATURE DATA READINGS

Date _____

REACTOR COOLANT PUMP TIE ROD DATA SHEET

RCP IDENTIFICATION RCP-1
DATE: _____
TIME: _____
INITIALS: _____
SYSTEM TEMP: _____

GAP MEASUREMENTS

GAP NO.		TIE ROD BRACKET IDENTIFICATION		
		TRB-1 (INSIDE)	TRB-2 (BACK)	TRB-3 (OUTSIDE)
TOP	1F			
	1B			
BOT	2F			
	2B			

NOTE

"F" is the front side (shimmed side) of the pin.

"B" is the back side (un-shimmed side) of the pin.

Record a minimum of one set of gaps (i.e., 1F and 1B or 2F and 2B.

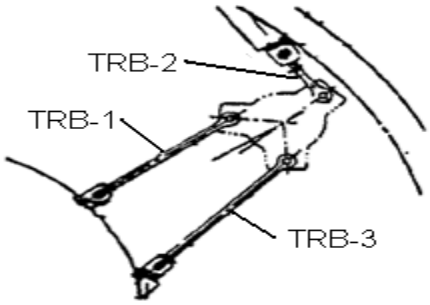

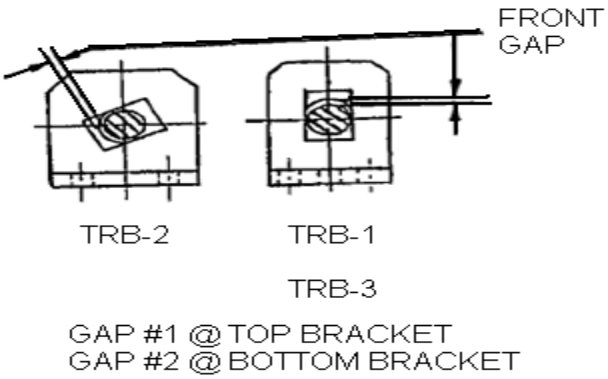

Attachment 13
(Page 17 of 35)

REACTOR COOLANT SYSTEM COMPONENT SUPPORT HOT FUNCTIONAL TEST 250° (245°-255°) TEMPERATURE DATA READINGS

Date _____

REACTOR COOLANT PUMP TIE ROD DATA SHEET

RCP IDENTIFICATION RCP-2
DATE: _____
TIME: _____
INITIALS: _____
SYSTEM TEMP: _____

GAP MEASUREMENTS

GAP NO.		TIE ROD BRACKET IDENTIFICATION		
		TRB-1 (INSIDE)	TRB-2 (BACK)	TRB-3 (OUTSIDE)
TOP	1F			
	1B			
BOT	2F			
	2B			

NOTE

"F" is the front side (shimmed side) of the pin.

"B" is the back side (un-shimmed side) of the pin.

Record a minimum of one set of gaps (i.e., 1F and 1B or 2F and 2B.

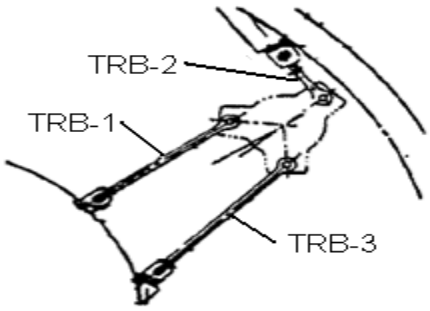

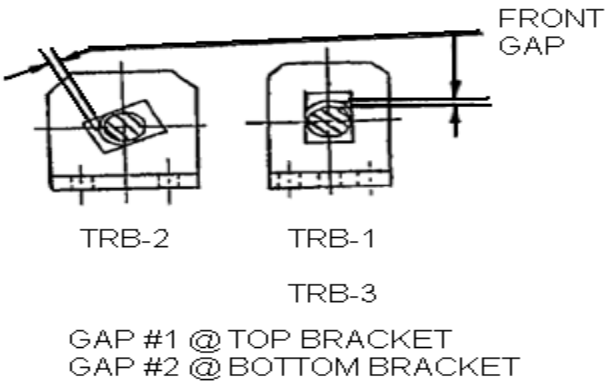

Attachment 13
(Page 18 of 35)

REACTOR COOLANT SYSTEM COMPONENT SUPPORT HOT FUNCTIONAL TEST 250° (245°-255°) TEMPERATURE DATA READINGS

Date _____

REACTOR COOLANT PUMP TIE ROD DATA SHEET

RCP IDENTIFICATION RCP-3
DATE: _____
TIME: _____
INITIALS: _____
SYSTEM TEMP: _____

GAP MEASUREMENTS

GAP NO.		TIE ROD BRACKET IDENTIFICATION		
		TRB-1 (INSIDE)	TRB-2 (BACK)	TRB-3 (OUTSIDE)
TOP	1F			
	1B			
BOT	2F			
	2B			

NOTE

"F" is the front side (shimmed side) of the pin.

"B" is the back side (un-shimmed side) of the pin.

Record a minimum of one set of gaps (i.e., 1F and 1B or 2F and 2B.

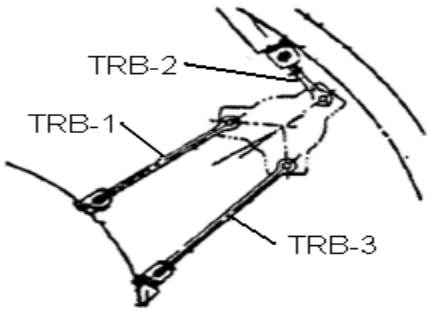

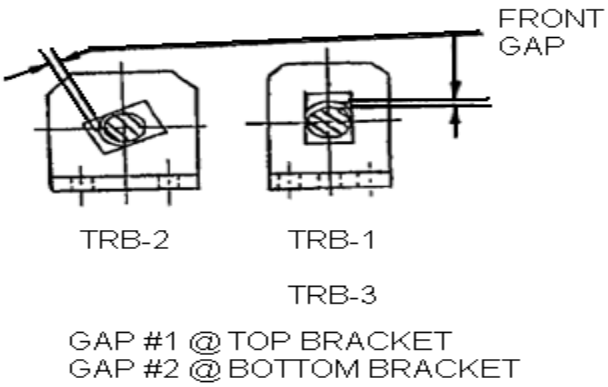

Attachment 13
(Page 19 of 35)

REACTOR COOLANT SYSTEM COMPONENT SUPPORT HOT FUNCTIONAL TEST 250° (245°-255°) TEMPERATURE DATA READINGS

Date _____

REACTOR COOLANT PUMP TIE ROD DATA SHEET

RCP IDENTIFICATION RCP-4
DATE: _____
TIME: _____
INITIALS: _____
SYSTEM TEMP: _____

GAP MEASUREMENTS

GAP NO.		TIE ROD BRACKET IDENTIFICATION		
		TRB-1 (INSIDE)	TRB-2 (BACK)	TRB-3 (OUTSIDE)
TOP	1F			
	1B			
BOT	2F			
	2B			

NOTE

"F" is the front side (shimmed side) of the pin.

"B" is the back side (un-shimmed side) of the pin.

Record a minimum of one set of gaps (i.e., 1F and 1B or 2F and 2B.

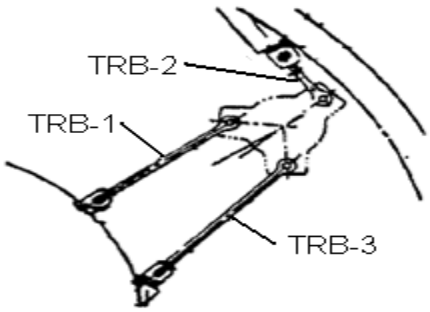

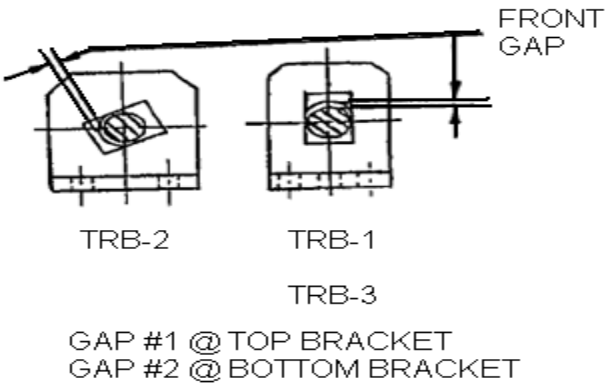

Attachment 13
(Page 20 of 35)

REACTOR COOLANT SYSTEM COMPONENT SUPPORT HOT FUNCTIONAL TEST 250° (245°-255°) TEMPERATURE DATA READINGS

Date _____

CROSS OVER LEG ELBOW SUPPORT LAYOUT DETAILS

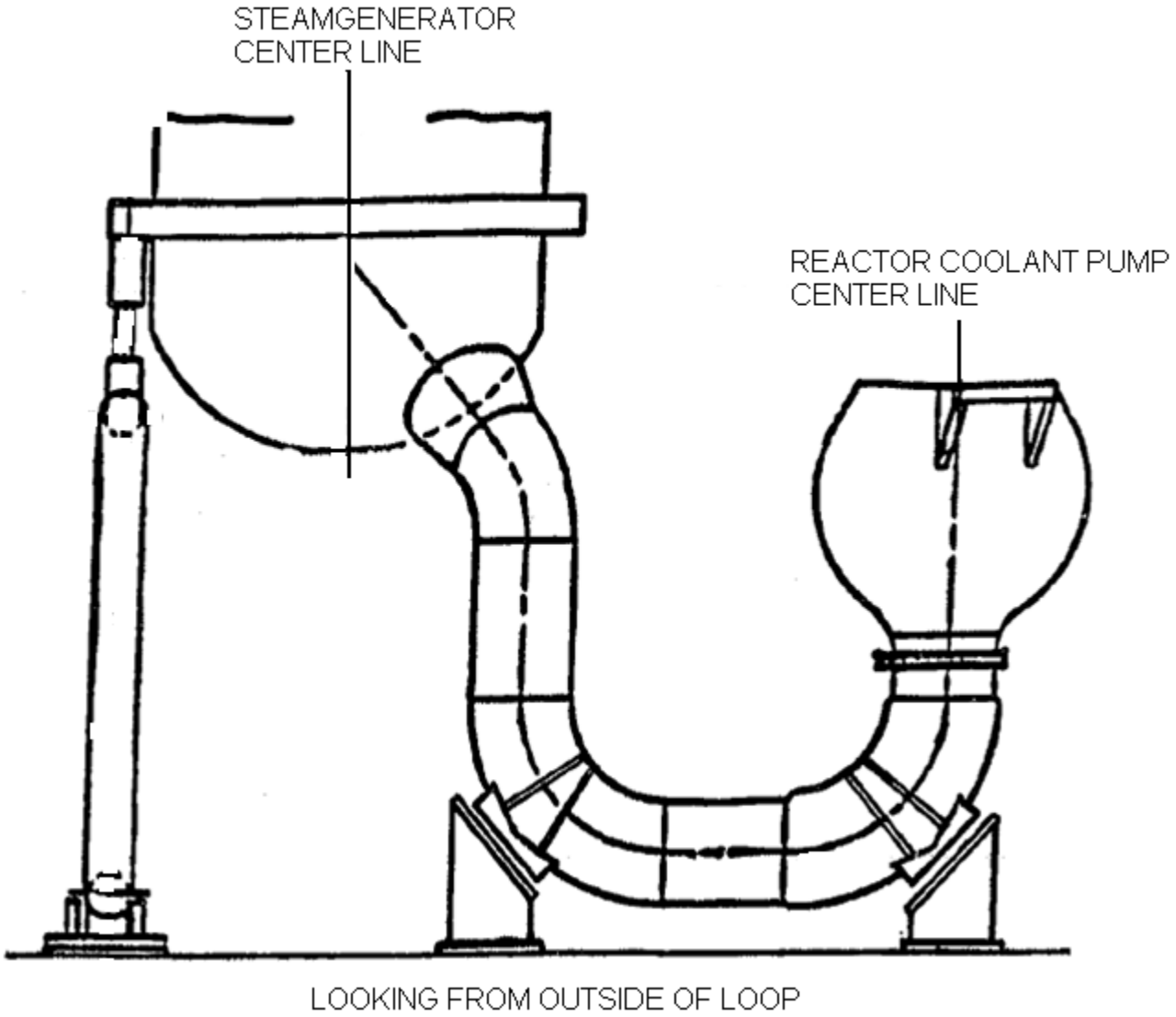

Attachment 13
(Page 21 of 35)

REACTOR COOLANT SYSTEM COMPONENT SUPPORT HOT FUNCTIONAL TEST 250° (245°-255°) TEMPERATURE DATA READINGS

Date _____

CROSS OVER LEG ELBOW SUPPORT DATA SHEET

LOOP IDENTIFICATION SG-1
DATE: _____
TIME: _____
INITIALS: _____
SYSTEM TEMP: _____

GAP MEASUREMENTS

SUPPORT	GAP 1	GAP 2	GAP 3	GAP 4
XLSG				
XLRCP				

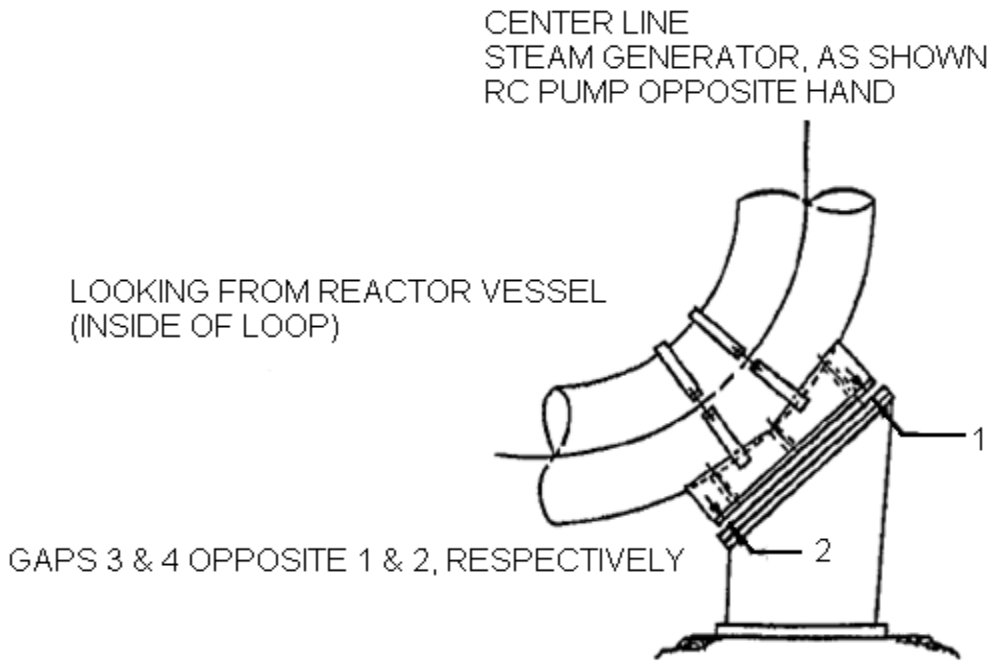

Attachment 13
(Page 22 of 35)

REACTOR COOLANT SYSTEM COMPONENT SUPPORT HOT FUNCTIONAL TEST 250° (245°-255°) TEMPERATURE DATA READINGS

Date _____

CROSS OVER LEG ELBOW SUPPORT DATA SHEET

LOOP IDENTIFICATION SG-2
DATE: _____
TIME: _____
INITIALS: _____
SYSTEM TEMP: _____

GAP MEASUREMENTS

SUPPORT	GAP 1	GAP 2	GAP 3	GAP 4
XLSG				
XLRCP				

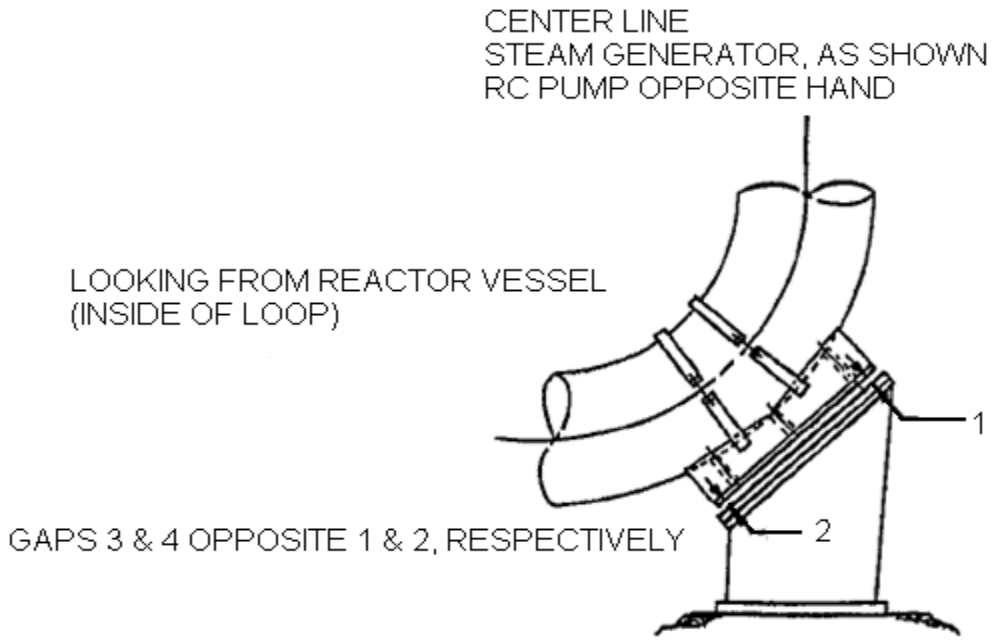

Attachment 13
(Page 23 of 35)

REACTOR COOLANT SYSTEM COMPONENT SUPPORT HOT FUNCTIONAL TEST 250° (245°-255°) TEMPERATURE DATA READINGS

Date _____

CROSS OVER LEG ELBOW SUPPORT DATA SHEET

LOOP IDENTIFICATION SG-3
DATE: _____
TIME: _____
INITIALS: _____
SYSTEM TEMP: _____

GAP MEASUREMENTS

SUPPORT	GAP 1	GAP 2	GAP 3	GAP 4
XLSG				
XLRCP				

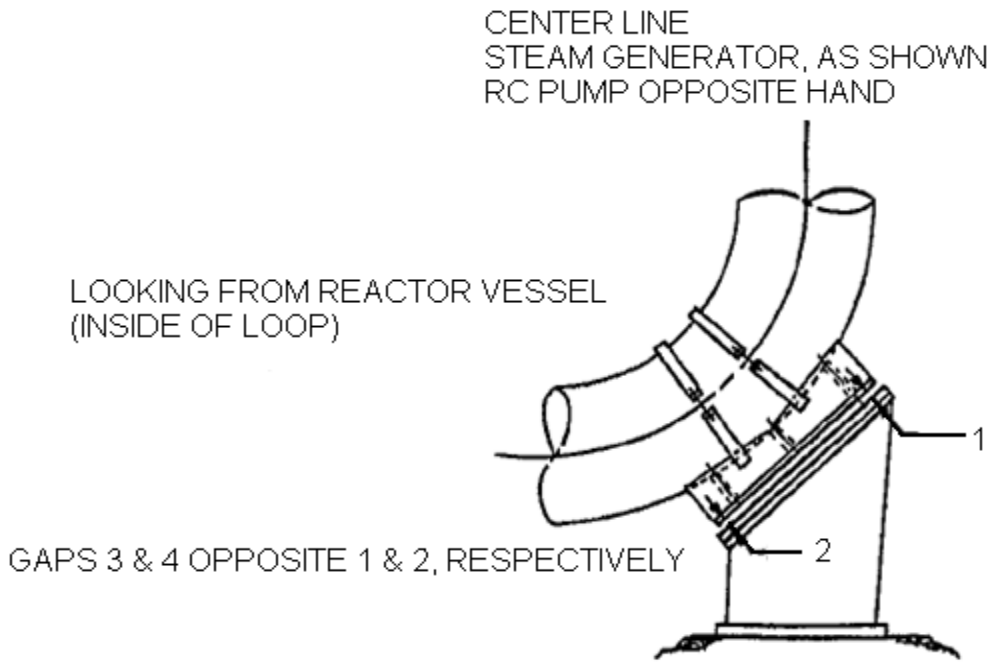

Attachment 13
(Page 24 of 35)

REACTOR COOLANT SYSTEM COMPONENT SUPPORT HOT FUNCTIONAL TEST 250° (245°-255°) TEMPERATURE DATA READINGS

Date _____

CROSS OVER LEG ELBOW SUPPORT DATA SHEET

LOOP IDENTIFICATION SG-4
DATE: _____
TIME: _____
INITIALS: _____
SYSTEM TEMP: _____

GAP MEASUREMENTS

SUPPORT	GAP 1	GAP 2	GAP 3	GAP 4
XLSG				
XLRCP				

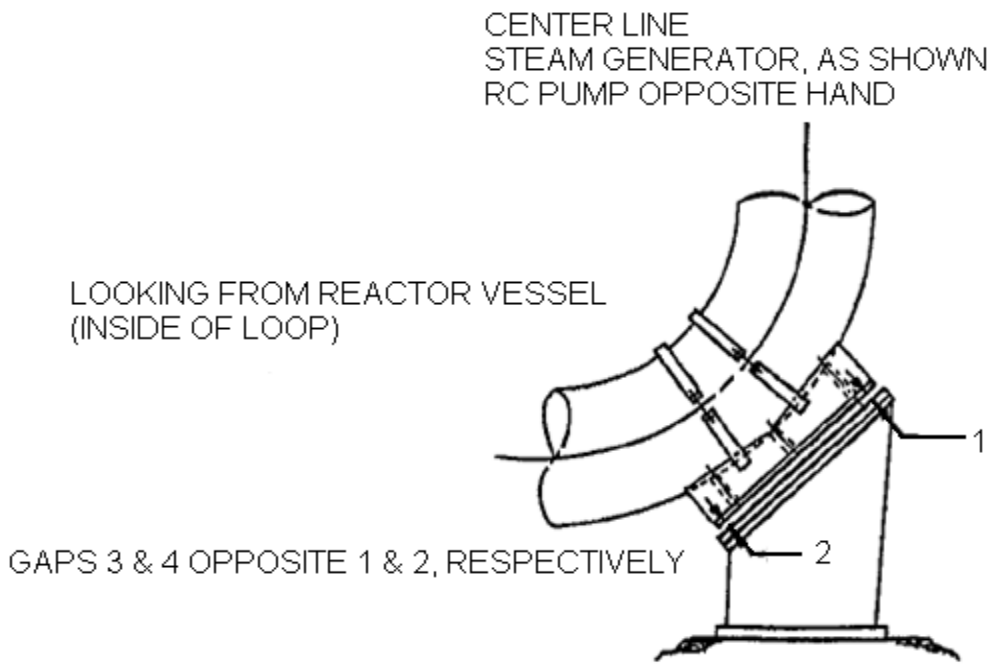

Attachment 13
(Page 25 of 35)

REACTOR COOLANT SYSTEM COMPONENT SUPPORT HOT FUNCTIONAL TEST 250° (245°-255°) TEMPERATURE DATA READINGS

Date _____

PRESSURIZER UPPER SUPPORTS LAYOUT DETAILS

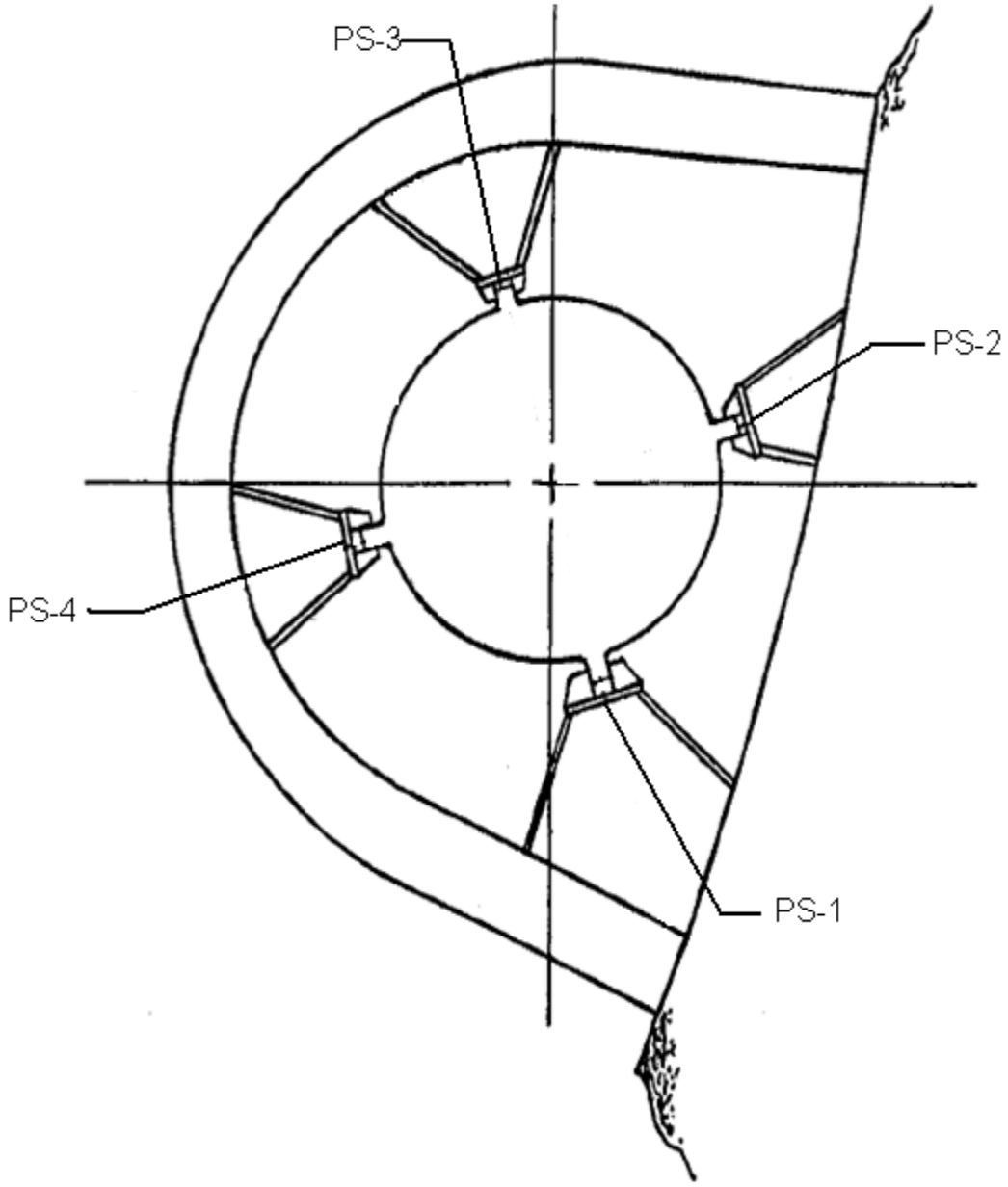

Attachment 13
(Page 26 of 35)

REACTOR COOLANT SYSTEM COMPONENT SUPPORT HOT FUNCTIONAL TEST 250° (245°-255°) TEMPERATURE DATA READINGS

Date _____

PRESSURIZER UPPER SUPPORT DATA SHEET

DATE: _____
TIME: _____
INITIALS: _____
SYSTEM TEMP: _____

GAP MEASUREMENTS

GAP NO.	BUMPER IDENTIFICATION			
	PS-1	PS-2	PS-3	PS-4
1	N/A	N/A	N/A	N/A
2				
3				
4	N/A	N/A	N/A	N/A

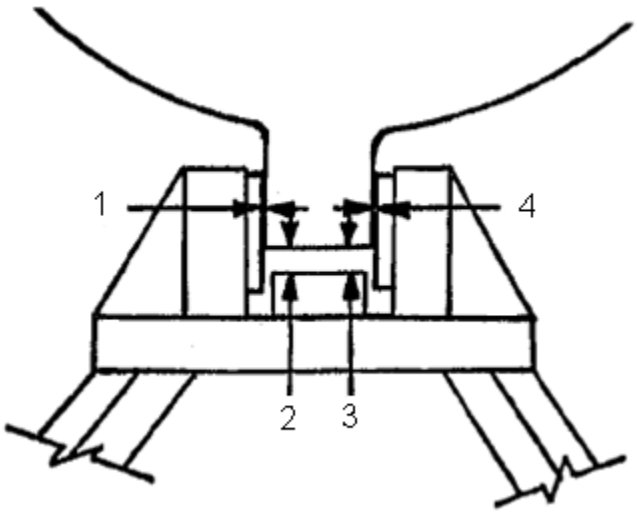

Attachment 13
(Page 27 of 35)

REACTOR COOLANT SYSTEM COMPONENT SUPPORT HOT FUNCTIONAL TEST 250° (245°-255°) TEMPERATURE DATA READINGS

Date _____

GENERAL LAYOUT OF STEAM GENERATORS AND REACTOR COOLANT PUMPS

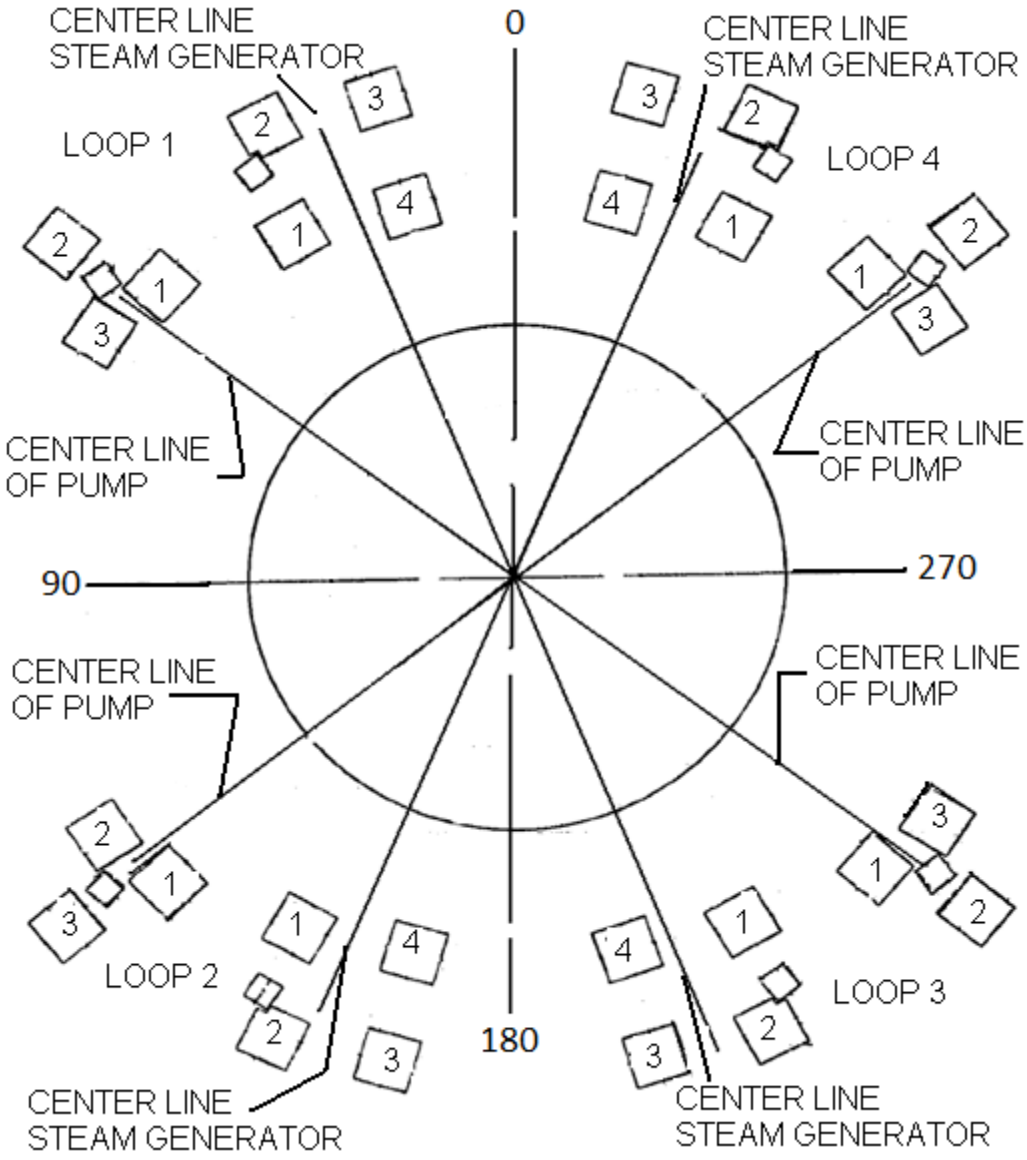

Attachment 13
(Page 28 of 35)

REACTOR COOLANT SYSTEM COMPONENT SUPPORT HOT FUNCTIONAL TEST 250° (245°-255°) TEMPERATURE DATA READINGS

Date _____

REACTOR COOLANT PUMP COLUMN DATA SHEET

RCP IDENTIFICATION RCP-1
DATE: _____
TIME: _____
INITIALS: _____
SYSTEM TEMP: _____

GAP NO.		COLUMNS		
		1	2	3
FRONT OR BACK	1			
SIDE	2			

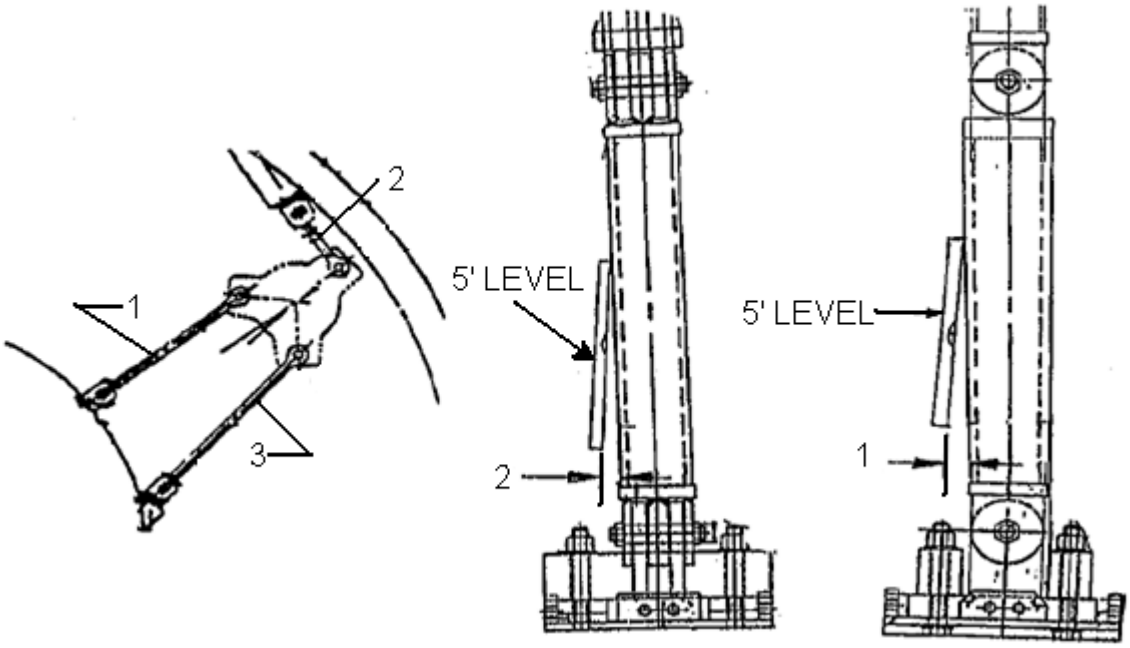

Attachment 13
(Page 29 of 35)

REACTOR COOLANT SYSTEM COMPONENT SUPPORT HOT FUNCTIONAL TEST 250° (245°-255°) TEMPERATURE DATA READINGS

Date _____

REACTOR COOLANT PUMP COLUMN DATA SHEET

RCP IDENTIFICATION RCP-2
DATE: _____
TIME: _____
INITIALS: _____
SYSTEM TEMP: _____

GAP NO.		COLUMNS		
		1	2	3
FRONT OR BACK	1			
SIDE	2			

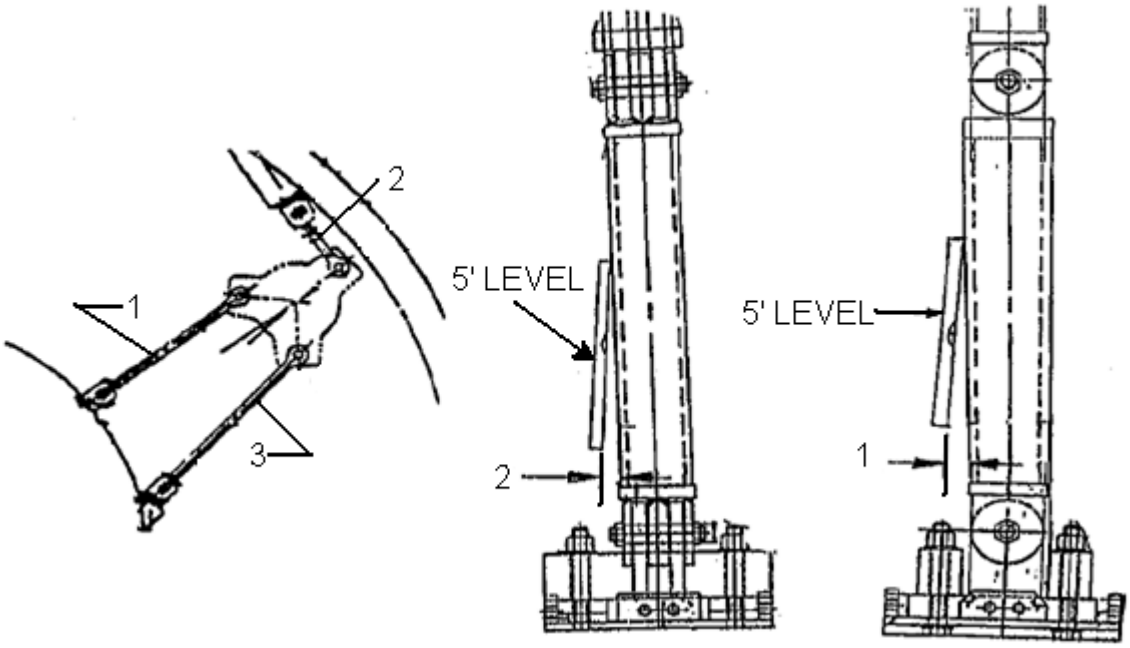

Attachment 13
(Page 30 of 35)

REACTOR COOLANT SYSTEM COMPONENT SUPPORT HOT FUNCTIONAL TEST 250° (245°-255°) TEMPERATURE DATA READINGS

Date _____

REACTOR COOLANT PUMP COLUMN DATA SHEET

RCP IDENTIFICATION RCP-3
DATE: _____
TIME: _____
INITIALS: _____
SYSTEM TEMP: _____

GAP NO.		COLUMNS		
		1	2	3
FRONT OR BACK	1			
SIDE	2			

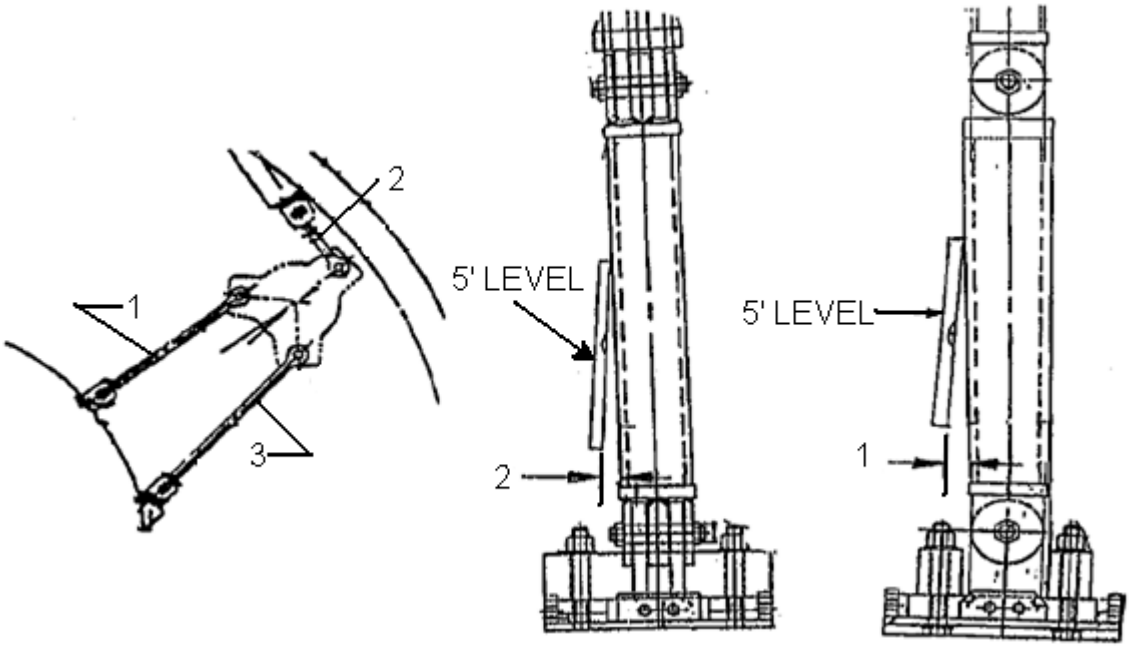

Attachment 13
(Page 31 of 35)

REACTOR COOLANT SYSTEM COMPONENT SUPPORT HOT FUNCTIONAL TEST 250° (245°-255°) TEMPERATURE DATA READINGS

Date _____

REACTOR COOLANT PUMP COLUMN DATA SHEET

RCP IDENTIFICATION RCP-4
DATE: _____
TIME: _____
INITIALS: _____
SYSTEM TEMP: _____

GAP NO.		COLUMNS		
		1	2	3
FRONT OR BACK	1			
SIDE	2			

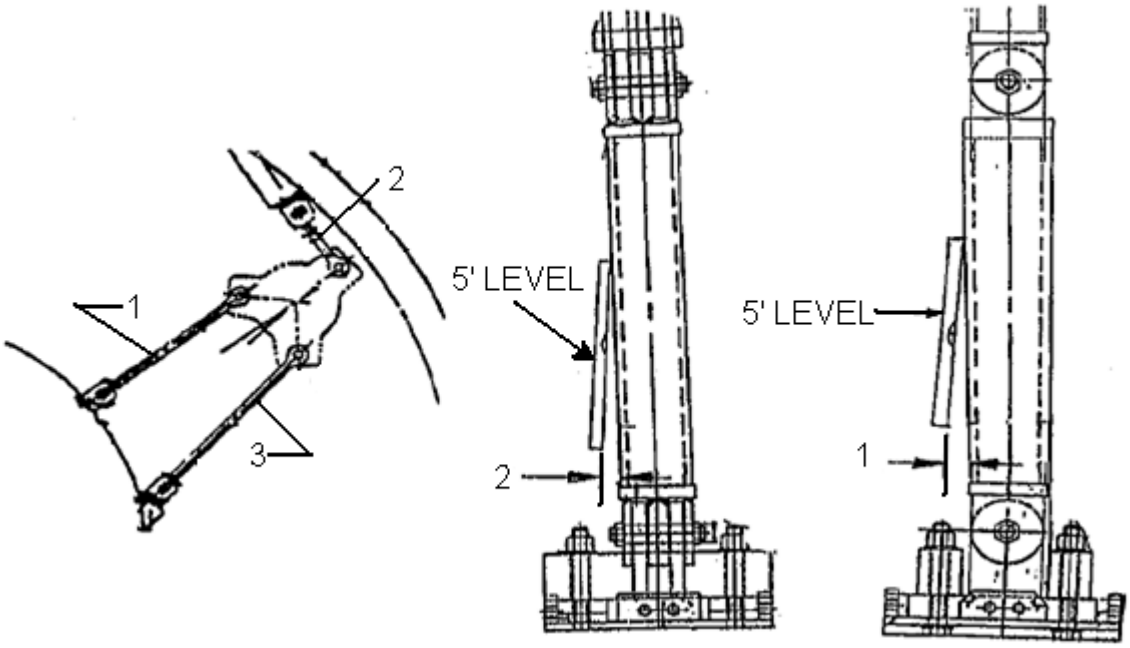

Attachment 13
(Page 32 of 35)

REACTOR COOLANT SYSTEM COMPONENT SUPPORT HOT FUNCTIONAL TEST 250° (245°-255°) TEMPERATURE DATA READINGS

Date _____

STEAM GENERATOR COLUMN DATA SHEET

SG IDENTIFICATION SG-1
DATE: _____
TIME: _____
INITIALS: _____
SYSTEM TEMP: _____

GAP NO.		COLUMNS			
		1	2	3	4
FRONT OR BACK	1				
SIDE	2				

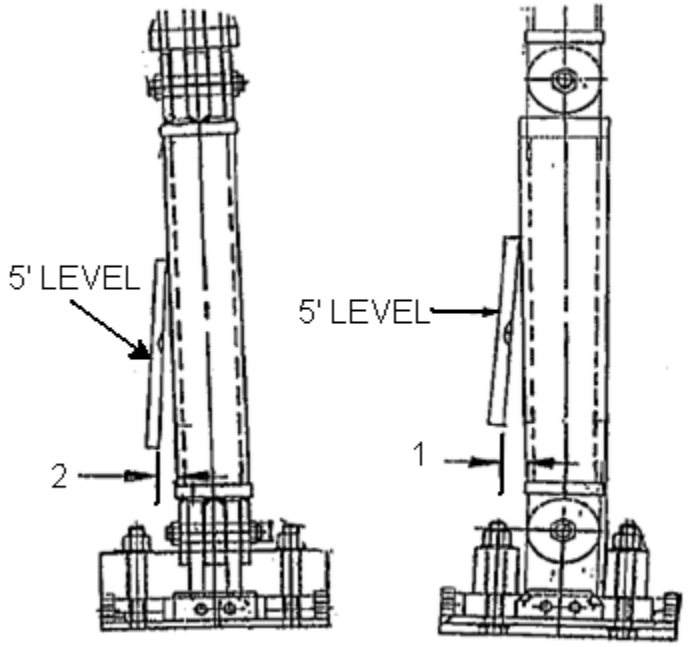

Attachment 13
(Page 33 of 35)

REACTOR COOLANT SYSTEM COMPONENT SUPPORT HOT FUNCTIONAL TEST 250° (245°-255°) TEMPERATURE DATA READINGS

Date _____

STEAM GENERATOR COLUMN DATA SHEET

SG IDENTIFICATION SG-2
DATE: _____
TIME: _____
INITIALS: _____
SYSTEM TEMP: _____

GAP NO.		COLUMNS			
		1	2	3	4
FRONT OR BACK	1				
SIDE	2				

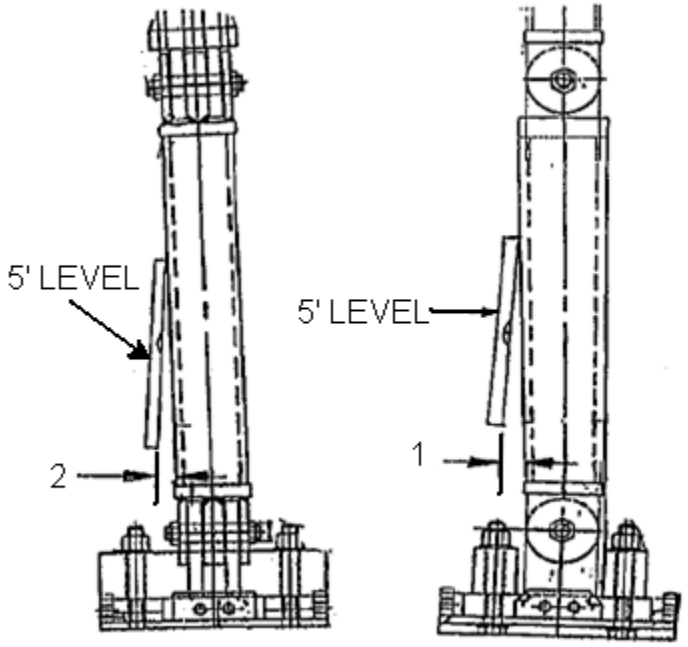

Attachment 13
(Page 34 of 35)

REACTOR COOLANT SYSTEM COMPONENT SUPPORT HOT FUNCTIONAL TEST 250° (245°-255°) TEMPERATURE DATA READINGS

Date _____

STEAM GENERATOR COLUMN DATA SHEET

SG IDENTIFICATION SG-3
DATE: _____
TIME: _____
INITIALS: _____
SYSTEM TEMP: _____

GAP NO.		COLUMNS			
		1	2	3	4
FRONT OR BACK	1				
SIDE	2				

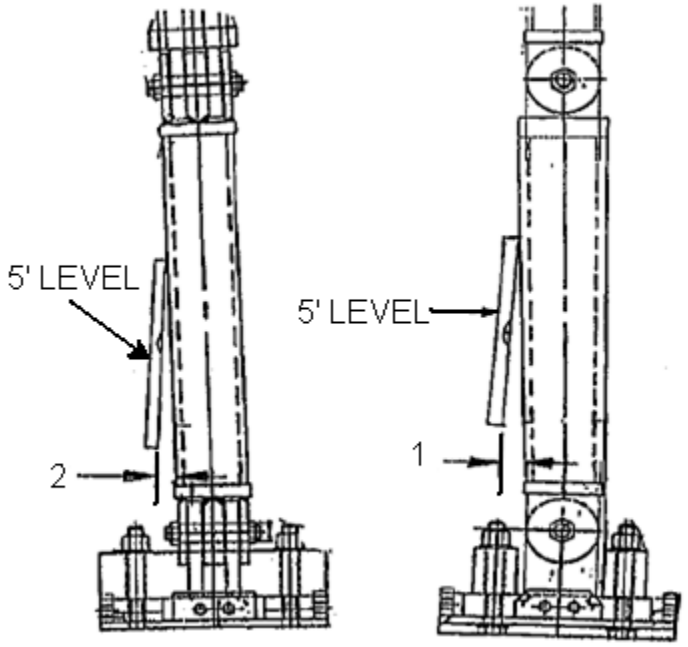

Attachment 13
(Page 35 of 35)

REACTOR COOLANT SYSTEM COMPONENT SUPPORT HOT FUNCTIONAL TEST 250° (245°-255°) TEMPERATURE DATA READINGS

Date _____

STEAM GENERATOR COLUMN DATA SHEET

SG IDENTIFICATION SG-4
DATE: _____
TIME: _____
INITIALS: _____
SYSTEM TEMP: _____

GAP NO.		COLUMNS			
		1	2	3	4
FRONT OR BACK	1				
SIDE	2				

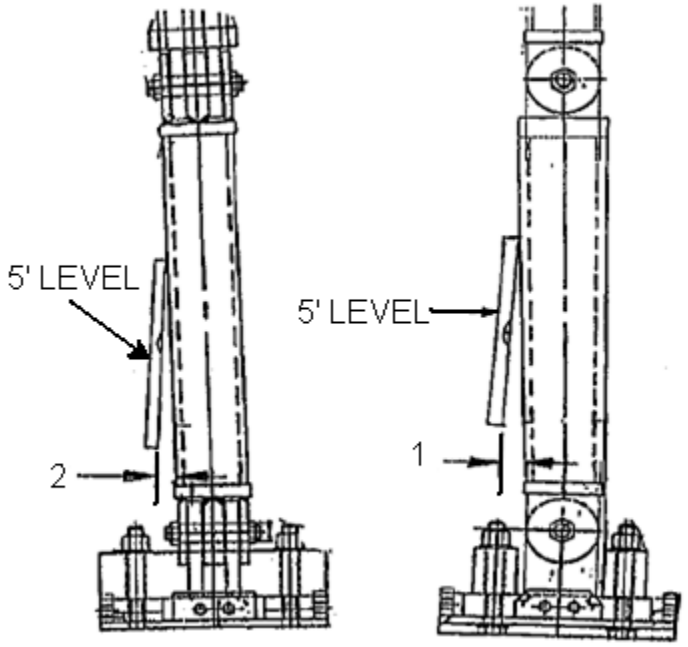

Attachment 14
(Page 1 of 35)

REACTOR COOLANT SYSTEM COMPONENT SUPPORT HOT FUNCTIONAL TEST 350° (345°-355°) TEMPERATURE DATA READINGS

Date _____

STEAM GENERATOR UPPER SUPPORT LAYOUT DETAIL

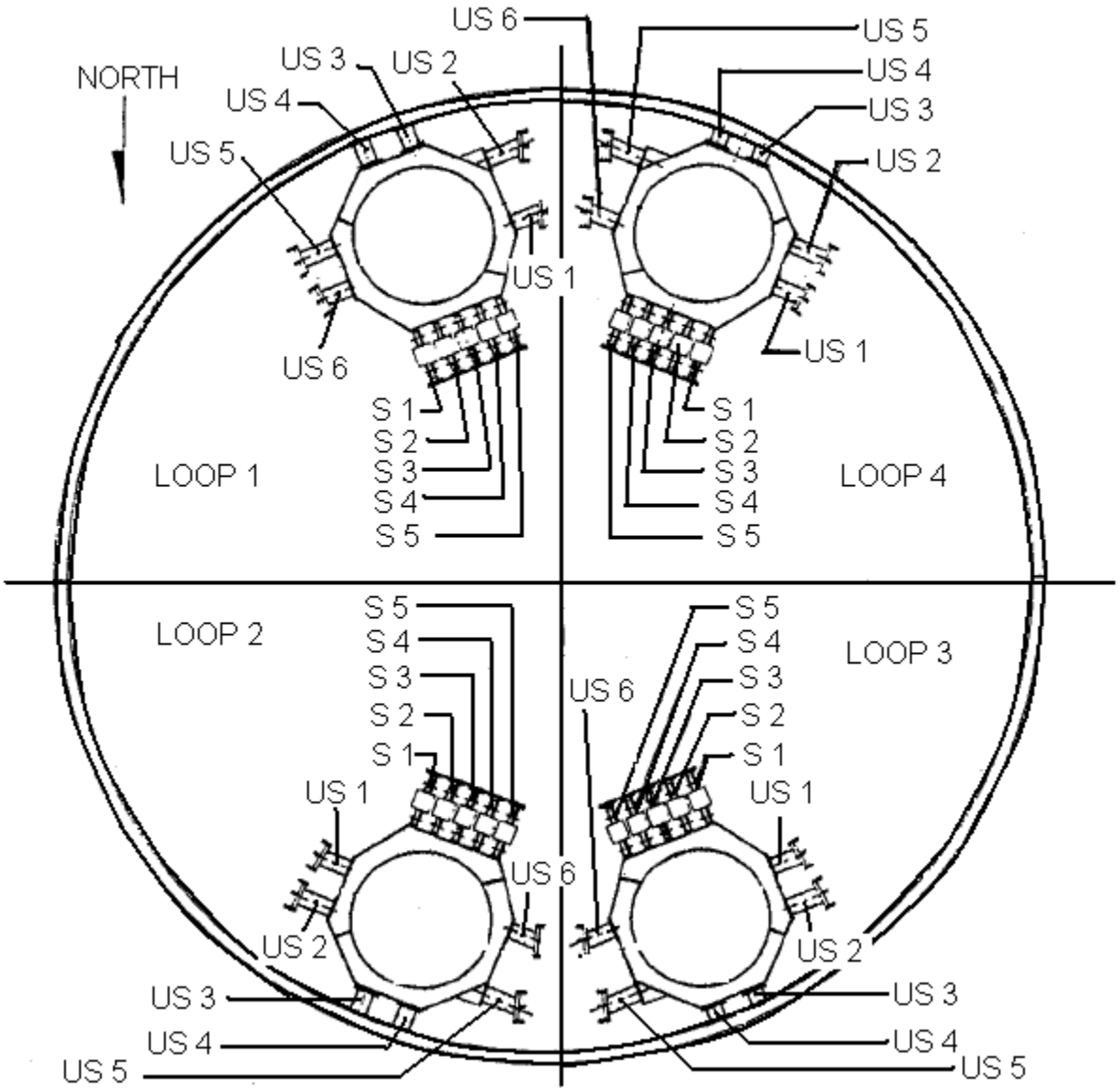

Attachment 14
(Page 2 of 35)

REACTOR COOLANT SYSTEM COMPONENT SUPPORT HOT FUNCTIONAL TEST 350° (345°-355°) TEMPERATURE DATA READINGS

Date _____

STEAM GENERATOR UPPER SUPPORT DYNAMIC SNUBBERS DATA SHEET

SG IDENTIFICATION SG-1
INITIALS: _____
SYSTEM TEMP: _____

ROD MEASUREMENT "A"

DATE	TIME	DYNAMIC SNUBBERS IDENTIFICATION				
		S-1	S-2	S-3	S-4	S-5

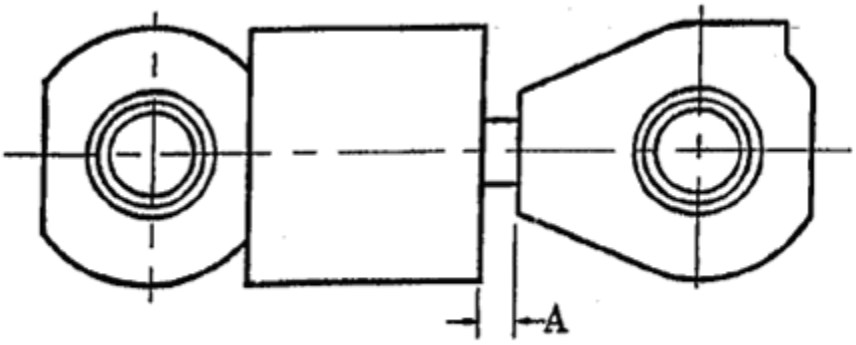

Attachment 14
(Page 3 of 35)

REACTOR COOLANT SYSTEM COMPONENT SUPPORT HOT FUNCTIONAL TEST 350° (345°-355°) TEMPERATURE DATA READINGS

Date _____

STEAM GENERATOR UPPER SUPPORT DYNAMIC SNUBBERS DATA SHEET

SG IDENTIFICATION SG-2
INITIALS: _____
SYSTEM TEMP: _____

ROD MEASUREMENT "A"

DATE	TIME	DYNAMIC SNUBBERS IDENTIFICATION				
		S-1	S-2	S-3	S-4	S-5

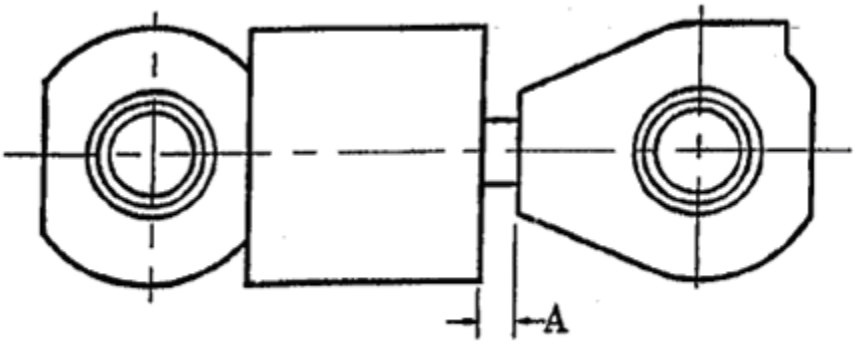

Attachment 14
(Page 4 of 35)

REACTOR COOLANT SYSTEM COMPONENT SUPPORT HOT FUNCTIONAL TEST 350° (345°-355°) TEMPERATURE DATA READINGS

Date _____

STEAM GENERATOR UPPER SUPPORT DYNAMIC SNUBBERS DATA SHEET

SG IDENTIFICATION SG-3
INITIALS: _____
SYSTEM TEMP: _____

ROD MEASUREMENT "A"

DATE	TIME	DYNAMIC SNUBBERS IDENTIFICATION				
		S-1	S-2	S-3	S-4	S-5

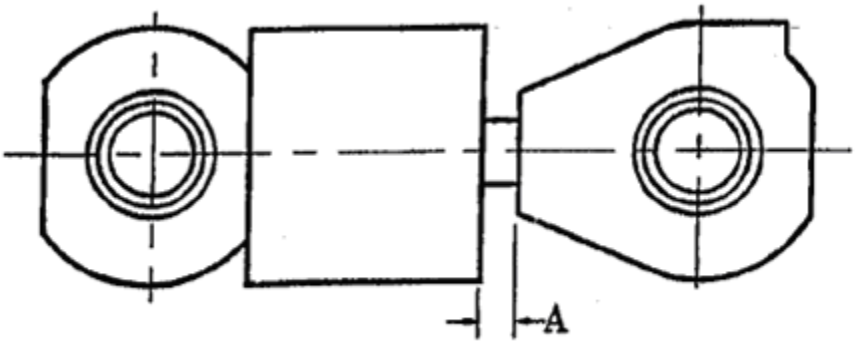

Attachment 14
(Page 5 of 35)

REACTOR COOLANT SYSTEM COMPONENT SUPPORT HOT FUNCTIONAL TEST 350° (345°-355°) TEMPERATURE DATA READINGS

Date _____

STEAM GENERATOR UPPER SUPPORT DYNAMIC SNUBBERS DATA SHEET

SG IDENTIFICATION SG-4
INITIALS: _____
SYSTEM TEMP: _____

ROD MEASUREMENT "A"

DATE	TIME	DYNAMIC SNUBBERS IDENTIFICATION				
		S-1	S-2	S-3	S-4	S-5

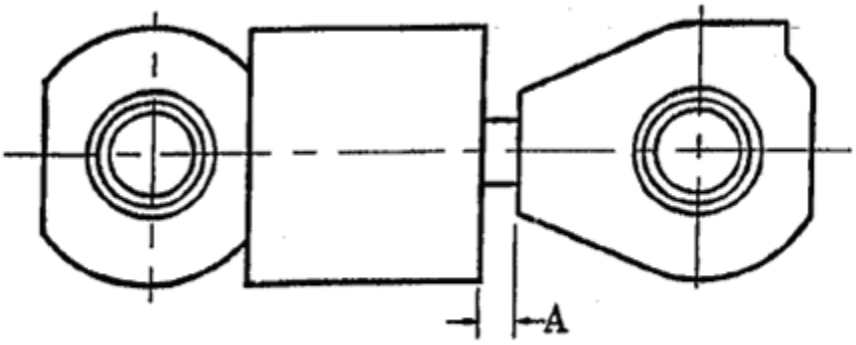

Attachment 14
(Page 6 of 35)

REACTOR COOLANT SYSTEM COMPONENT SUPPORT HOT FUNCTIONAL TEST 350° (345°-355°) TEMPERATURE DATA READINGS

Date _____

STEAM GENERATOR UPPER SUPPORT DATA SHEET

SG IDENTIFICATION SG-1
DATE: _____
TIME: _____
INITIALS: _____
SYSTEM TEMP: _____

GAP MEASUREMENTS

GAP NO.	BUMPER IDENTIFICATION					
	US-1	US-2	US-3	US-4	US-5	US-6
1						
2						
3						
4						

NOTE

Visual inspection only for US-1, US-2, US-5 and US-6. Record as “SAT” (Satisfactory) or “UNSAT” (Unsatisfactory for gap 1. If “UNSAT” is recorded, give brief description of condition in box provided (gaps 2, 3, and 4).

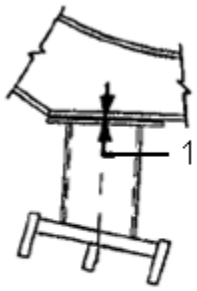

US-1 & US-2

US-5 & US-6

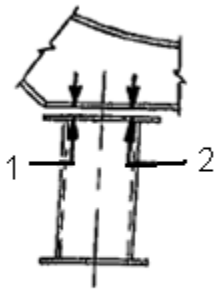

US-3 & US-4

Attachment 14
(Page 7 of 35)

REACTOR COOLANT SYSTEM COMPONENT SUPPORT HOT FUNCTIONAL TEST 350° (345°-355°) TEMPERATURE DATA READINGS

Date _____

STEAM GENERATOR UPPER SUPPORT DATA SHEET

SG IDENTIFICATION SG-2
DATE: _____
TIME: _____
INITIALS: _____
SYSTEM TEMP: _____

GAP MEASUREMENTS

GAP NO.	BUMPER IDENTIFICATION					
	US-1	US-2	US-3	US-4	US-5	US-6
1						
2						
3						
4						

NOTE

Visual inspection only for US-1, US-2, US-5 and US-6. Record as “SAT” (Satisfactory) or “UNSAT” (Unsatisfactory for gap 1. If “UNSAT” is recorded, give brief description of condition in box provided (gaps 2, 3, and 4).

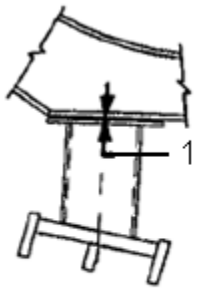

US-1 & US-2

US-5 & US-6

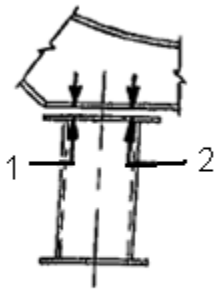

US-3 & US-4

Attachment 14
(Page 8 of 35)

REACTOR COOLANT SYSTEM COMPONENT SUPPORT HOT FUNCTIONAL TEST 350° (345°-355°) TEMPERATURE DATA READINGS

Date _____

STEAM GENERATOR UPPER SUPPORT DATA SHEET

SG IDENTIFICATION SG-3
DATE: _____
TIME: _____
INITIALS: _____
SYSTEM TEMP: _____

GAP MEASUREMENTS

GAP NO.	BUMPER IDENTIFICATION					
	US-1	US-2	US-3	US-4	US-5	US-6
1						
2						
3						
4						

NOTE

Visual inspection only for US-1, US-2, US-5 and US-6. Record as “SAT” (Satisfactory) or “UNSAT” (Unsatisfactory for gap 1. If “UNSAT” is recorded, give brief description of condition in box provided (gaps 2, 3, and 4).

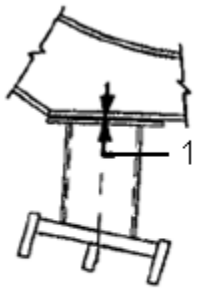

US-1 & US-2

US-5 & US-6

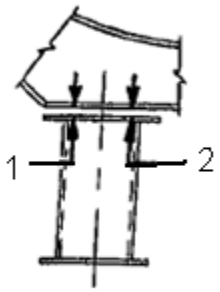

US-3 & US-4

Attachment 14
(Page 9 of 35)

REACTOR COOLANT SYSTEM COMPONENT SUPPORT HOT FUNCTIONAL TEST 350° (345°-355°) TEMPERATURE DATA READINGS

Date _____

STEAM GENERATOR UPPER SUPPORT DATA SHEET

SG IDENTIFICATION SG-4
DATE: _____
TIME: _____
INITIALS: _____
SYSTEM TEMP: _____

GAP MEASUREMENTS

GAP NO.	BUMPER IDENTIFICATION					
	US-1	US-2	US-3	US-4	US-5	US-6
1						
2						
3						
4						

NOTE

Visual inspection only for US-1, US-2, US-5 and US-6. Record as “SAT” (Satisfactory) or “UNSAT” (Unsatisfactory for gap 1. If “UNSAT” is recorded, give brief description of condition in box provided (gaps 2, 3, and 4).

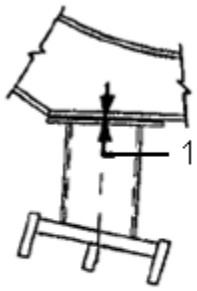

US-1 & US-2

US-5 & US-6

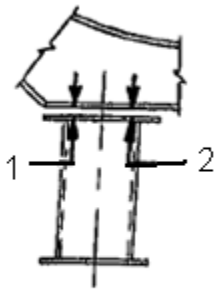

US-3 & US-4

Attachment 14
(Page 10 of 35)

REACTOR COOLANT SYSTEM COMPONENT SUPPORT HOT FUNCTIONAL TEST 350° (345°-355°) TEMPERATURE DATA READINGS

Date _____

STEAM GENERATOR LOWER SUPPORT LAYOUT DETAILS

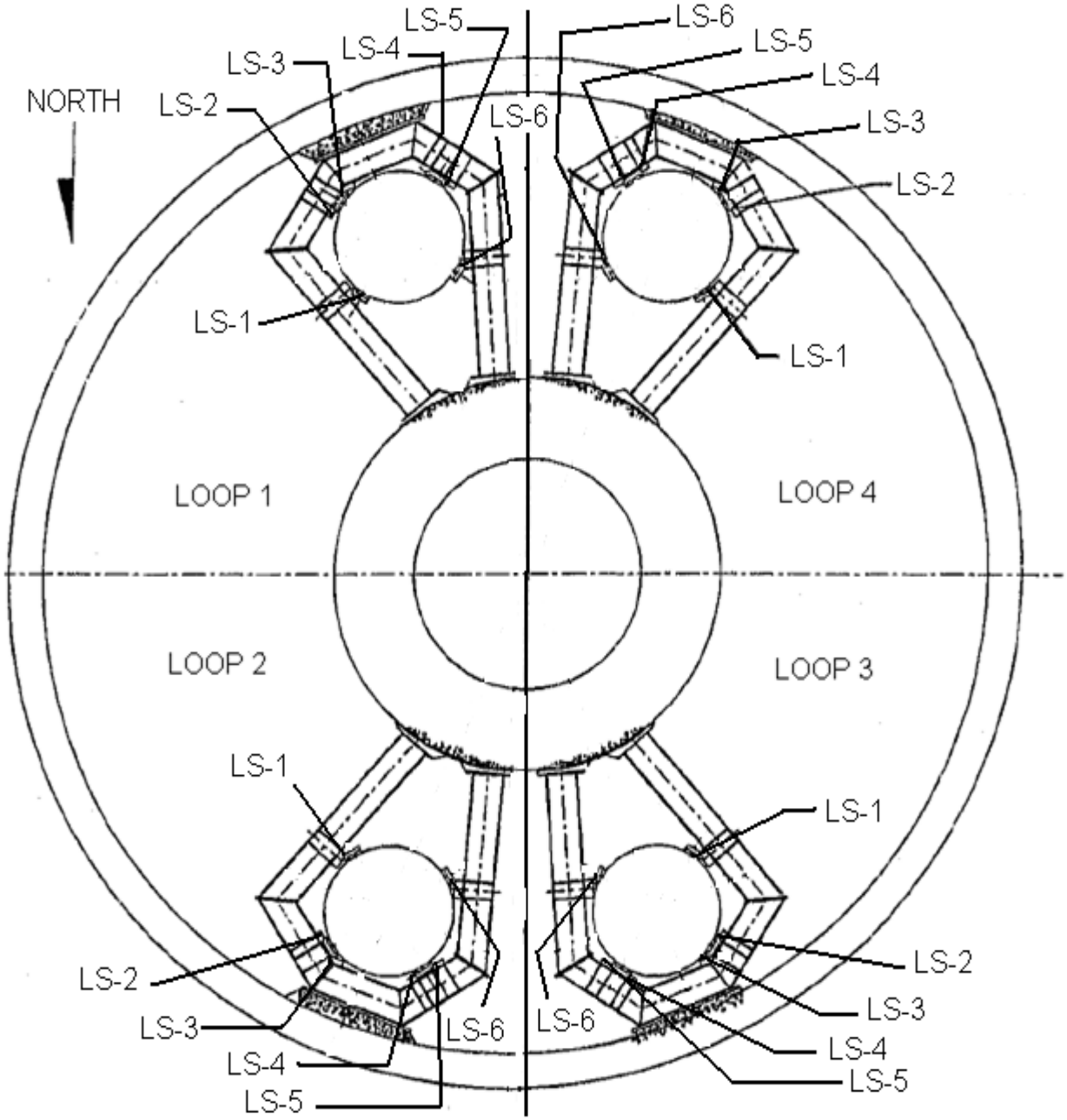

Attachment 14
(Page 11 of 35)

REACTOR COOLANT SYSTEM COMPONENT SUPPORT HOT FUNCTIONAL TEST 350° (345°-355°) TEMPERATURE DATA READINGS

Date _____

STEAM GENERATOR LOWER SUPPORT DATA SHEET

SG IDENTIFICATION SG-1
DATE: _____
TIME: _____
INITIALS: _____
SYSTEM TEMP: _____

GAP MEASUREMENTS

GAP NO.	BUMPER IDENTIFICATION					
	LS-1	LS-2	LS-3	LS-4	LS-5	LS-6
1						
2						
3						
4						

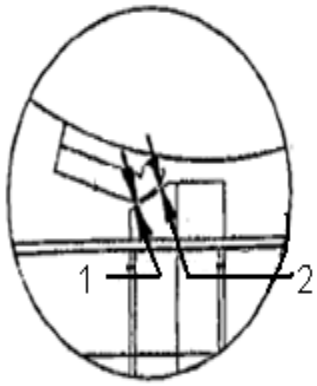

LS-1

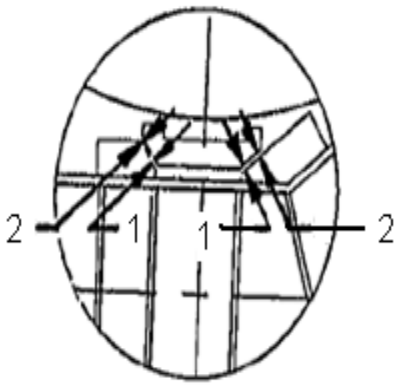

LS-2 & LS-3

LS-4 & LS-5

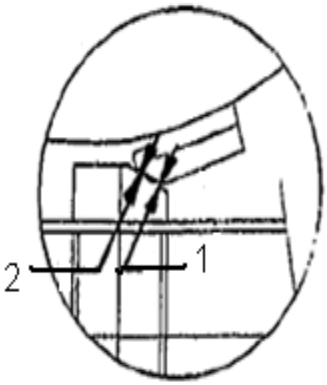

LS-6

Attachment 14
(Page 12 of 35)

REACTOR COOLANT SYSTEM COMPONENT SUPPORT HOT FUNCTIONAL TEST 350° (345°-355°) TEMPERATURE DATA READINGS

Date _____

STEAM GENERATOR LOWER SUPPORT DATA SHEET

SG IDENTIFICATION SG-2
DATE: _____
TIME: _____
INITIALS: _____
SYSTEM TEMP: _____

GAP MEASUREMENTS

GAP NO.	BUMPER IDENTIFICATION					
	LS-1	LS-2	LS-3	LS-4	LS-5	LS-6
1						
2						
3						
4						

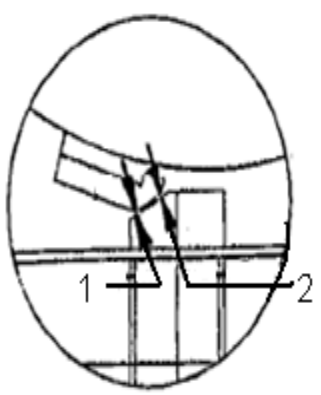

LS-1

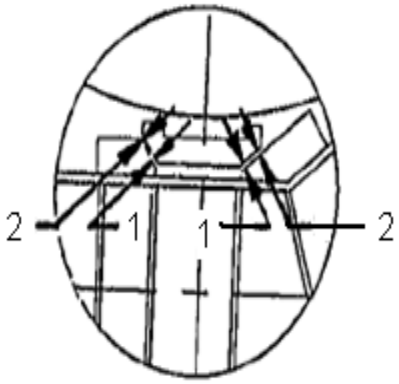

LS-2 & LS-3

LS-4 & LS-5

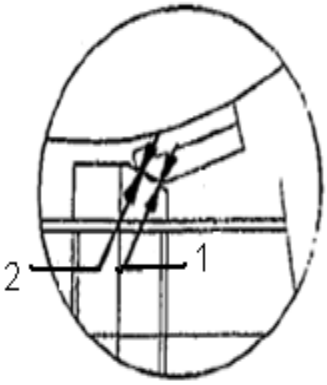

LS-6

Attachment 14
(Page 13 of 35)

REACTOR COOLANT SYSTEM COMPONENT SUPPORT HOT FUNCTIONAL TEST 350° (345°-355°) TEMPERATURE DATA READINGS

Date _____

STEAM GENERATOR LOWER SUPPORT DATA SHEET

SG IDENTIFICATION SG-3
DATE: _____
TIME: _____
INITIALS: _____
SYSTEM TEMP: _____

GAP MEASUREMENTS

GAP NO.	BUMPER IDENTIFICATION					
	LS-1	LS-2	LS-3	LS-4	LS-5	LS-6
1						
2						
3						
4						

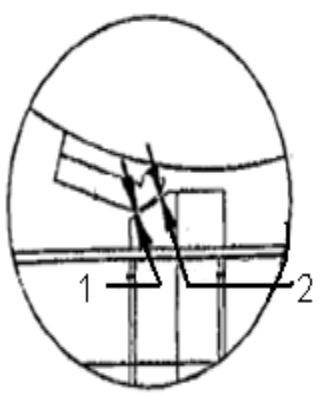

LS-1

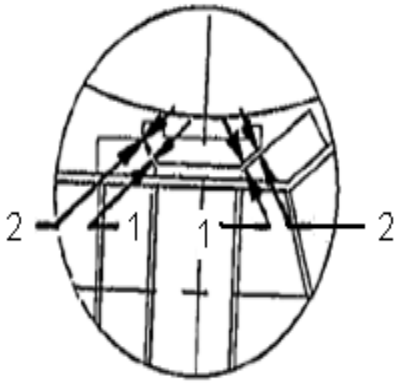

LS-2 & LS-3

LS-4 & LS-5

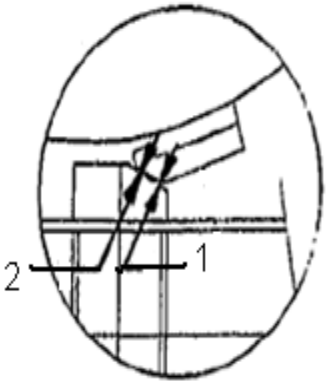

LS-6

Attachment 14
(Page 14 of 35)

REACTOR COOLANT SYSTEM COMPONENT SUPPORT HOT FUNCTIONAL TEST 350° (345°-355°) TEMPERATURE DATA READINGS

Date _____

STEAM GENERATOR LOWER SUPPORT DATA SHEET

SG IDENTIFICATION SG-4
DATE: _____
TIME: _____
INITIALS: _____
SYSTEM TEMP: _____

GAP MEASUREMENTS

GAP NO.	BUMPER IDENTIFICATION					
	LS-1	LS-2	LS-3	LS-4	LS-5	LS-6
1						
2						
3						
4						

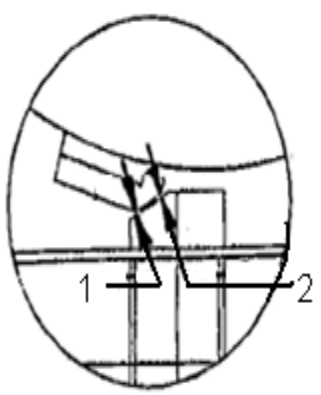

LS-1

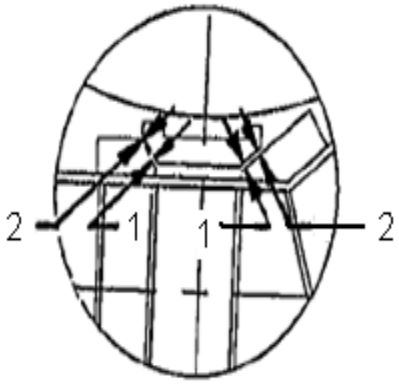

LS-2 & LS-3

LS-4 & LS-5

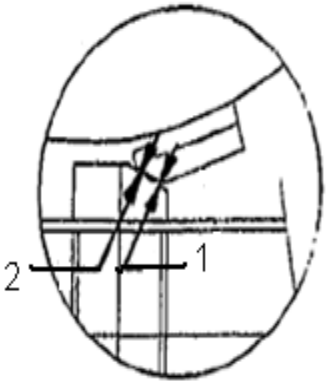

LS-6

Attachment 14
(Page 15 of 35)

REACTOR COOLANT SYSTEM COMPONENT SUPPORT HOT FUNCTIONAL TEST 350° (345°-355°) TEMPERATURE DATA READINGS

Date _____

REACTOR COOLANT PUMP TIE ROD LAYOUT DETAILS

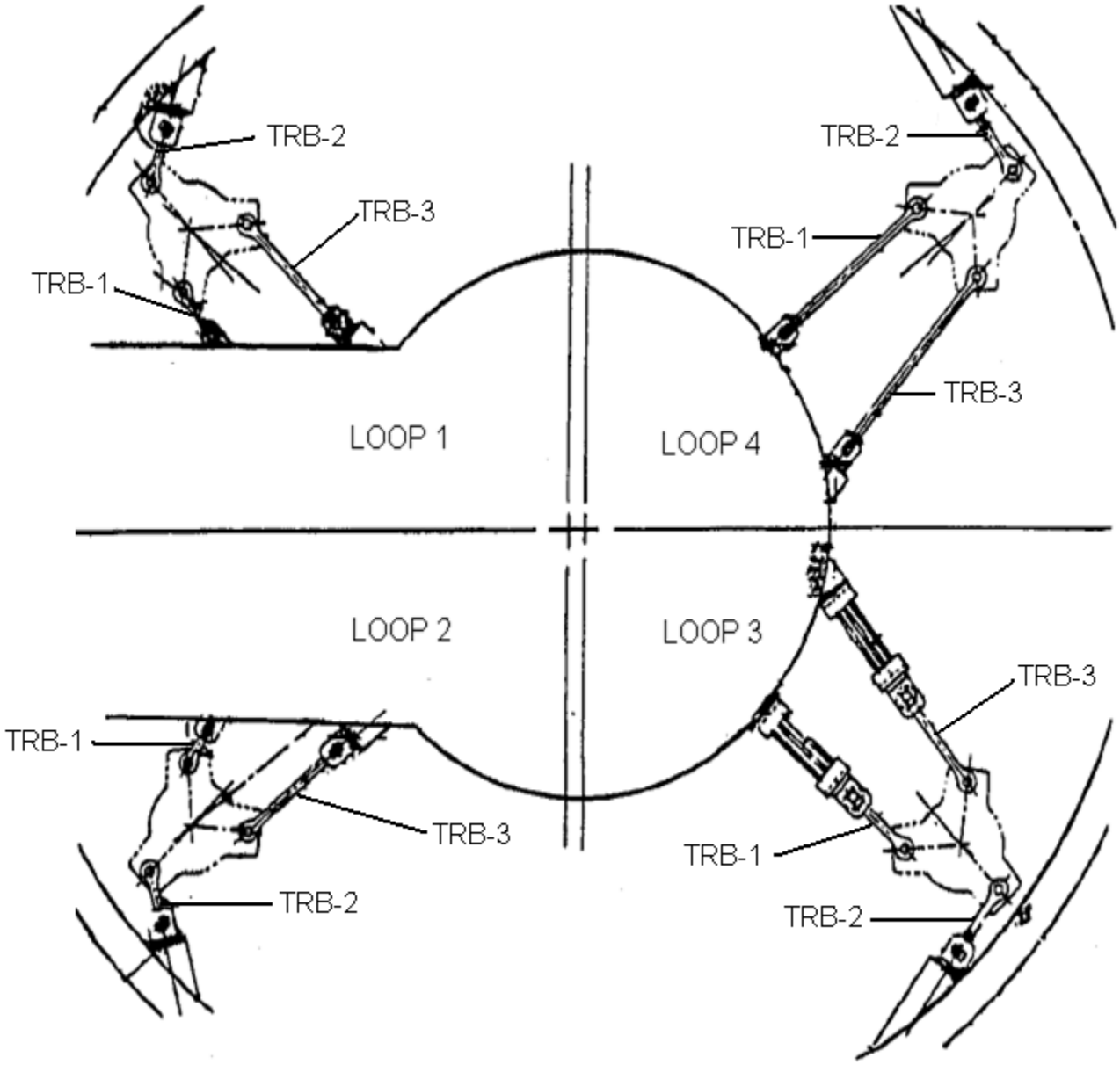

Attachment 14
(Page 16 of 35)

REACTOR COOLANT SYSTEM COMPONENT SUPPORT HOT FUNCTIONAL TEST 350° (345°-355°) TEMPERATURE DATA READINGS

Date _____

REACTOR COOLANT PUMP TIE ROD DATA SHEET

RCP IDENTIFICATION RCP-1
DATE: _____
TIME: _____
INITIALS: _____
SYSTEM TEMP: _____

GAP MEASUREMENTS

GAP NO.		TIE ROD BRACKET IDENTIFICATION		
		TRB-1 (INSIDE)	TRB-2 (BACK)	TRB-3 (OUTSIDE)
TOP	1F			
	1B			
BOT	2F			
	2B			

NOTE

"F" is the front side (shimmed side) of the pin.

"B" is the back side (un-shimmed side) of the pin.

Record a minimum of one set of gaps (i.e., 1F and 1B or 2F and 2B).

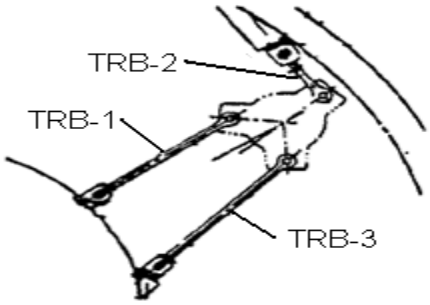

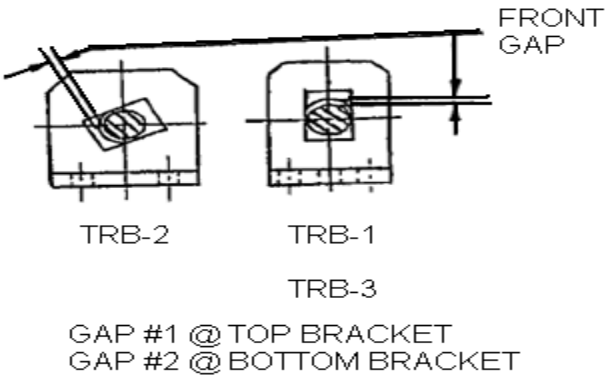

Attachment 14
(Page 17 of 35)

REACTOR COOLANT SYSTEM COMPONENT SUPPORT HOT FUNCTIONAL TEST 350° (345°-355°) TEMPERATURE DATA READINGS

Date _____

REACTOR COOLANT PUMP TIE ROD DATA SHEET

RCP IDENTIFICATION RCP-2
DATE: _____
TIME: _____
INITIALS: _____
SYSTEM TEMP: _____

GAP MEASUREMENTS

GAP NO.		TIE ROD BRACKET IDENTIFICATION		
		TRB-1 (INSIDE)	TRB-2 (BACK)	TRB-3 (OUTSIDE)
TOP	1F			
	1B			
BOT	2F			
	2B			

NOTE

"F" is the front side (shimmed side) of the pin.

"B" is the back side (un-shimmed side) of the pin.

Record a minimum of one set of gaps (i.e., 1F and 1B or 2F and 2B).

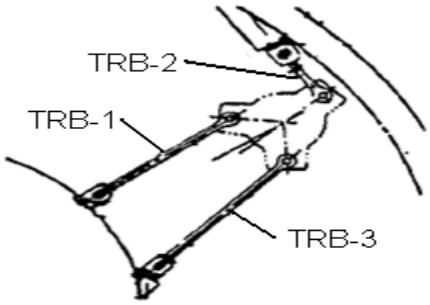

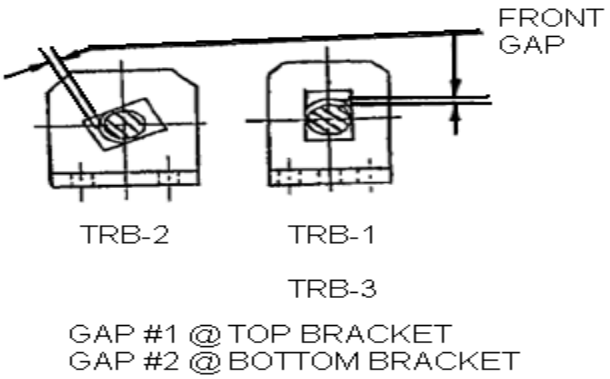

Attachment 14
(Page 18 of 35)

REACTOR COOLANT SYSTEM COMPONENT SUPPORT HOT FUNCTIONAL TEST 350° (345°-355°) TEMPERATURE DATA READINGS

Date _____

REACTOR COOLANT PUMP TIE ROD DATA SHEET

RCP IDENTIFICATION RCP-3
DATE: _____
TIME: _____
INITIALS: _____
SYSTEM TEMP: _____

GAP MEASUREMENTS

GAP NO.		TIE ROD BRACKET IDENTIFICATION		
		TRB-1 (INSIDE)	TRB-2 (BACK)	TRB-3 (OUTSIDE)
TOP	1F			
	1B			
BOT	2F			
	2B			

NOTE

"F" is the front side (shimmed side) of the pin.

"B" is the back side (un-shimmed side) of the pin.

Record a minimum of one set of gaps (i.e., 1F and 1B or 2F and 2B).

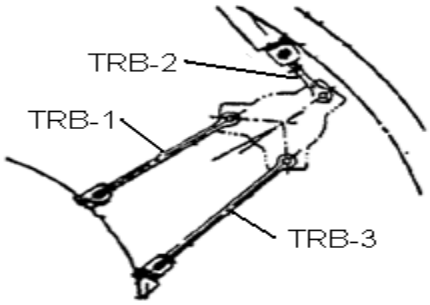

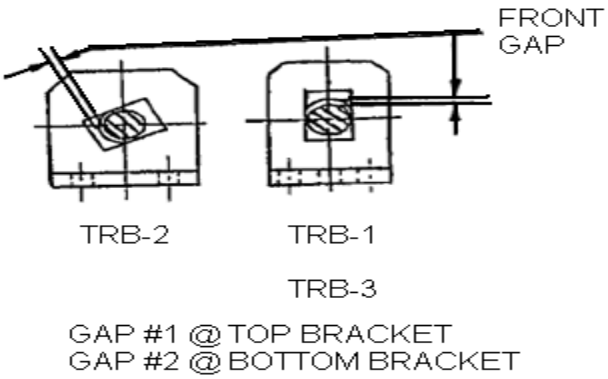

Attachment 14
(Page 19 of 35)

REACTOR COOLANT SYSTEM COMPONENT SUPPORT HOT FUNCTIONAL TEST 350° (345°-355°) TEMPERATURE DATA READINGS

Date _____

REACTOR COOLANT PUMP TIE ROD DATA SHEET

RCP IDENTIFICATION RCP-4
DATE: _____
TIME: _____
INITIALS: _____
SYSTEM TEMP: _____

GAP MEASUREMENTS

GAP NO.		TIE ROD BRACKET IDENTIFICATION		
		TRB-1 (INSIDE)	TRB-2 (BACK)	TRB-3 (OUTSIDE)
TOP	1F			
	1B			
BOT	2F			
	2B			

NOTE

"F" is the front side (shimmed side) of the pin.

"B" is the back side (un-shimmed side) of the pin.

Record a minimum of one set of gaps (i.e., 1F and 1B or 2F and 2B).

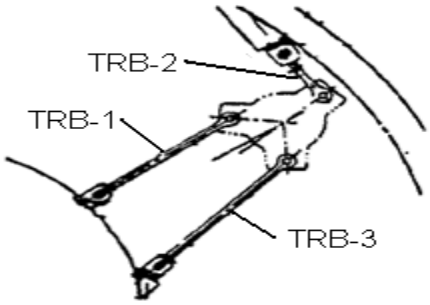

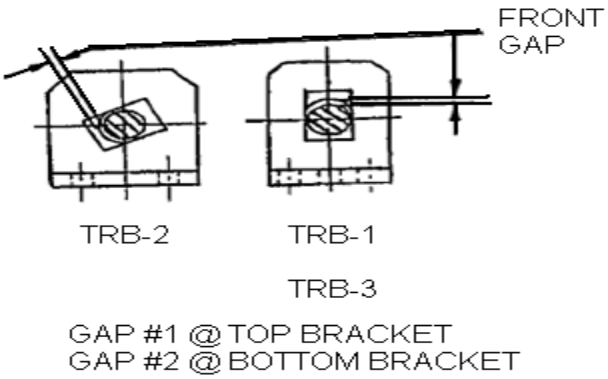

Attachment 14
(Page 20 of 35)

REACTOR COOLANT SYSTEM COMPONENT SUPPORT HOT FUNCTIONAL TEST 350° (345°-355°) TEMPERATURE DATA READINGS

Date _____

CROSS OVER LEG ELBOW SUPPORT LAYOUT DETAILS

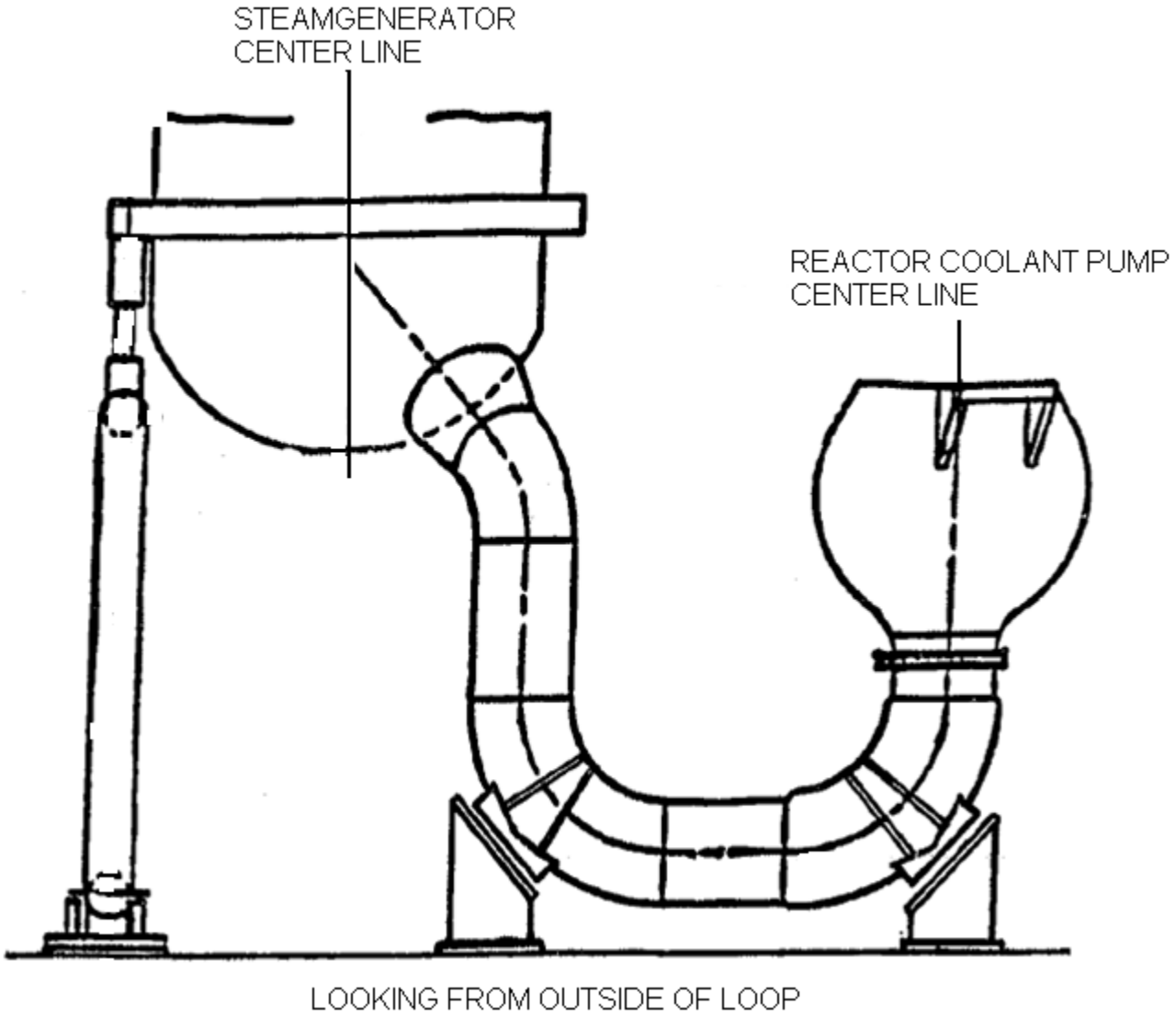

Attachment 14
(Page 21 of 35)

REACTOR COOLANT SYSTEM COMPONENT SUPPORT HOT FUNCTIONAL TEST 350° (345°-355°) TEMPERATURE DATA READINGS

Date _____

CROSS OVER LEG ELBOW SUPPORT DATA SHEET

LOOP IDENTIFICATION SG-1
DATE: _____
TIME: _____
INITIALS: _____
SYSTEM TEMP: _____

GAP MEASUREMENTS

SUPPORT	GAP 1	GAP 2	GAP 3	GAP 4
XLSG				
XLRCP				

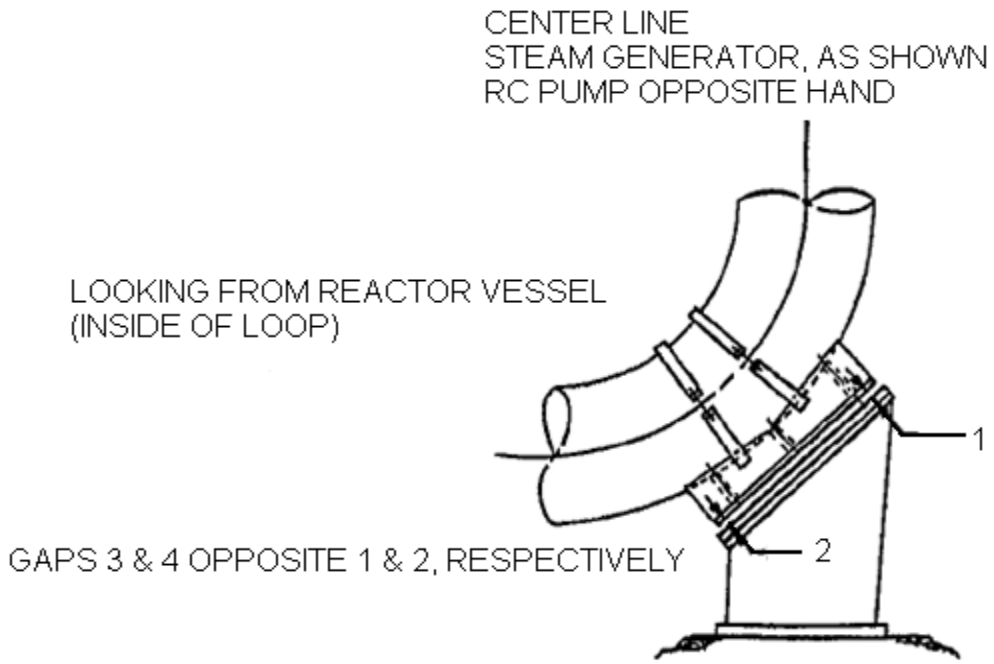

Attachment 14
(Page 22 of 35)

REACTOR COOLANT SYSTEM COMPONENT SUPPORT HOT FUNCTIONAL TEST 350° (345°-355°) TEMPERATURE DATA READINGS

Date _____

CROSS OVER LEG ELBOW SUPPORT DATA SHEET

LOOP IDENTIFICATION SG-2
DATE: _____
TIME: _____
INITIALS: _____
SYSTEM TEMP: _____

GAP MEASUREMENTS

SUPPORT	GAP 1	GAP 2	GAP 3	GAP 4
XLSG				
XLRCP				

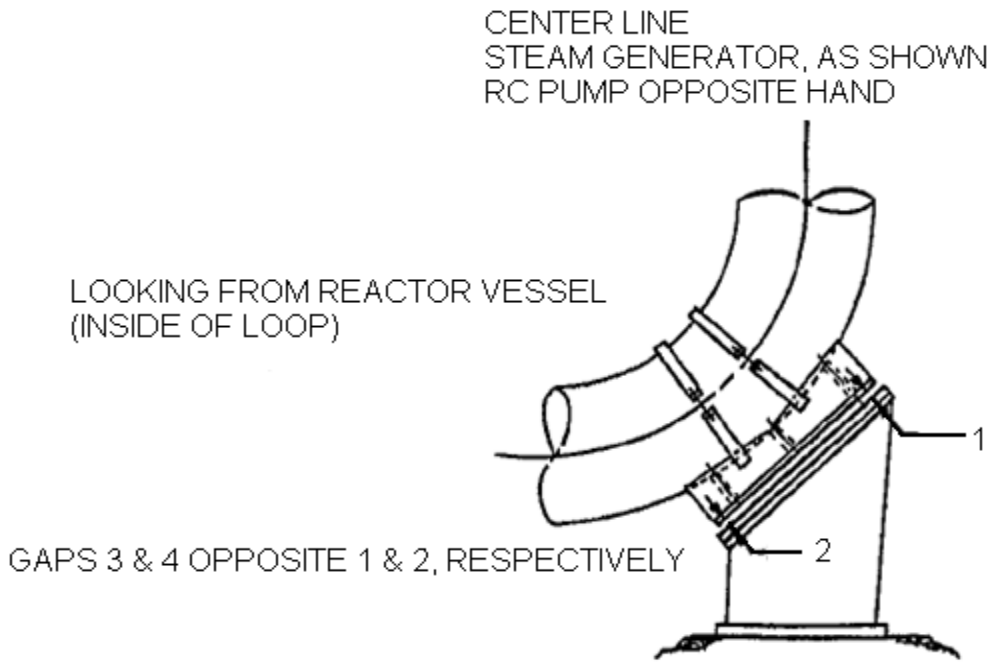

Attachment 14
(Page 23 of 35)

REACTOR COOLANT SYSTEM COMPONENT SUPPORT HOT FUNCTIONAL TEST 350° (345°-355°) TEMPERATURE DATA READINGS

Date _____

CROSS OVER LEG ELBOW SUPPORT DATA SHEET

LOOP IDENTIFICATION SG-3
DATE: _____
TIME: _____
INITIALS: _____
SYSTEM TEMP: _____

GAP MEASUREMENTS

SUPPORT	GAP 1	GAP 2	GAP 3	GAP 4
XLSG				
XLRCP				

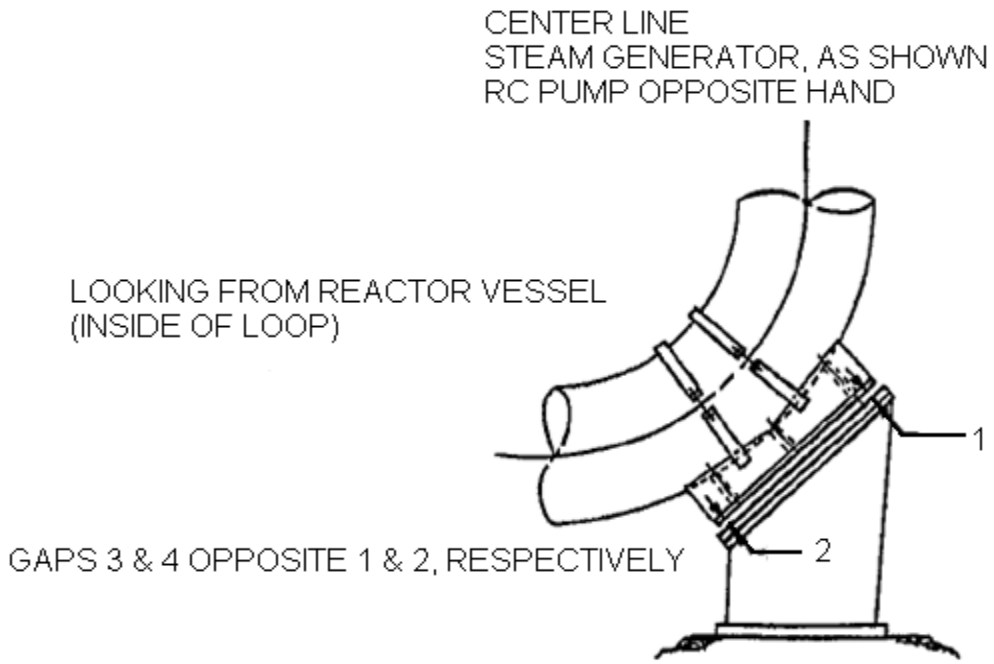

Attachment 14
(Page 24 of 35)

REACTOR COOLANT SYSTEM COMPONENT SUPPORT HOT FUNCTIONAL TEST 350° (345°-355°) TEMPERATURE DATA READINGS

Date _____

CROSS OVER LEG ELBOW SUPPORT DATA SHEET

LOOP IDENTIFICATION SG-4
DATE: _____
TIME: _____
INITIALS: _____
SYSTEM TEMP: _____

GAP MEASUREMENTS

SUPPORT	GAP 1	GAP 2	GAP 3	GAP 4
XLSG				
XLRCP				

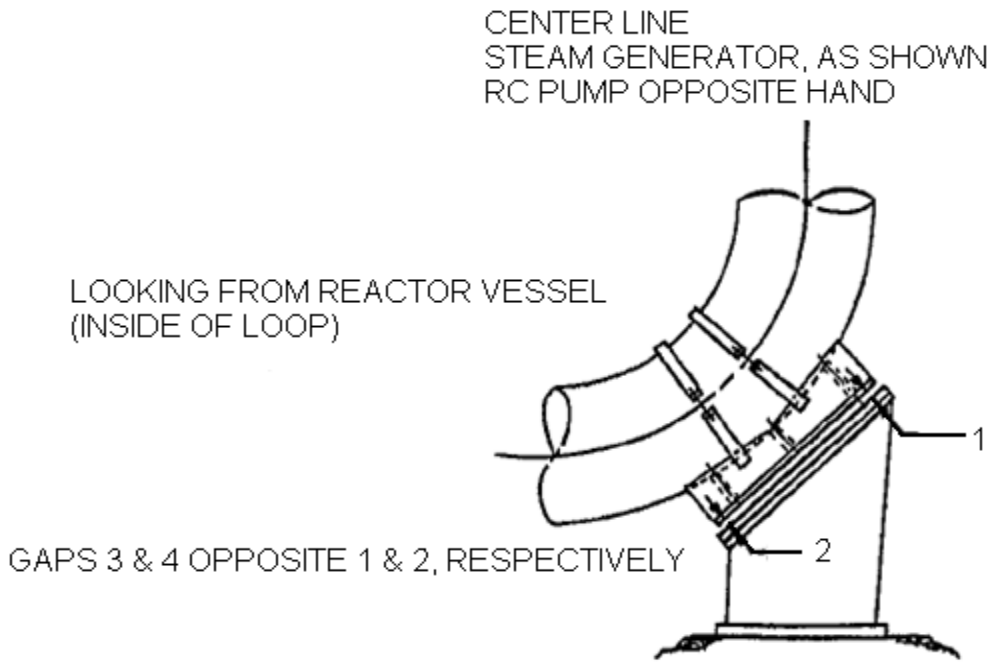

Attachment 14
(Page 25 of 35)

REACTOR COOLANT SYSTEM COMPONENT SUPPORT HOT FUNCTIONAL TEST 350° (345°-355°) TEMPERATURE DATA READINGS

Date _____

PRESSURIZER UPPER SUPPORTS LAYOUT DETAILS

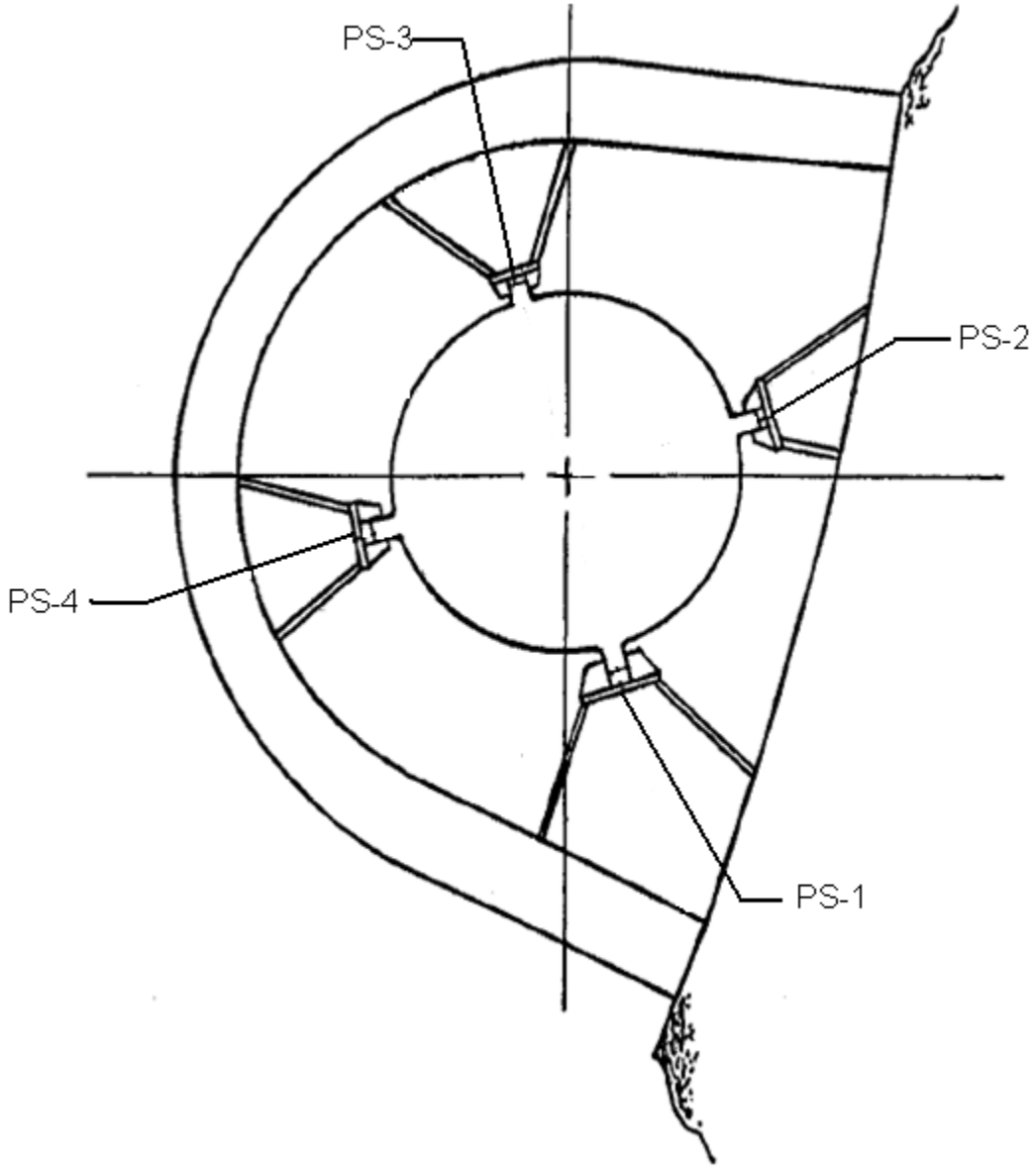

Attachment 14
(Page 26 of 35)

REACTOR COOLANT SYSTEM COMPONENT SUPPORT HOT FUNCTIONAL TEST 350° (345°-355°) TEMPERATURE DATA READINGS

Date _____

PRESSURIZER UPPER SUPPORT DATA SHEET

DATE: _____
TIME: _____
INITIALS: _____
SYSTEM TEMP: _____

GAP MEASUREMENTS

GAP NO.	BUMPER IDENTIFICATION			
	PS-1	PS-2	PS-3	PS-4
1				
2				
3				
4				
5				
6				
7				
8				

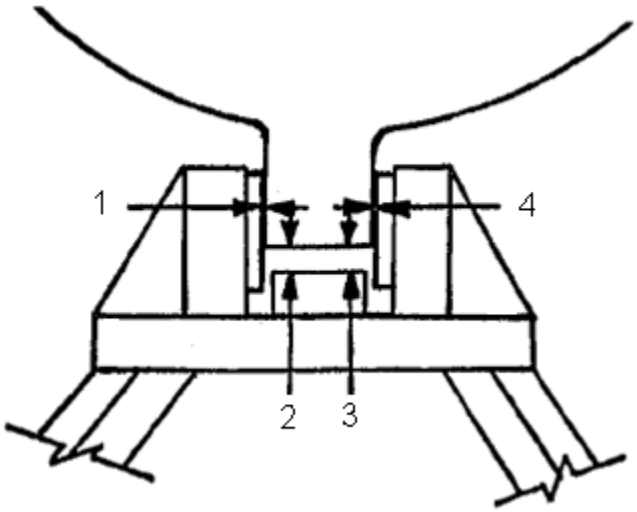

Attachment 14
(Page 27 of 35)

REACTOR COOLANT SYSTEM COMPONENT SUPPORT HOT FUNCTIONAL TEST 350° (345°-355°) TEMPERATURE DATA READINGS

Date _____

GENERAL LAYOUT OF STEAM GENERATORS AND REACTOR COOLANT PUMPS

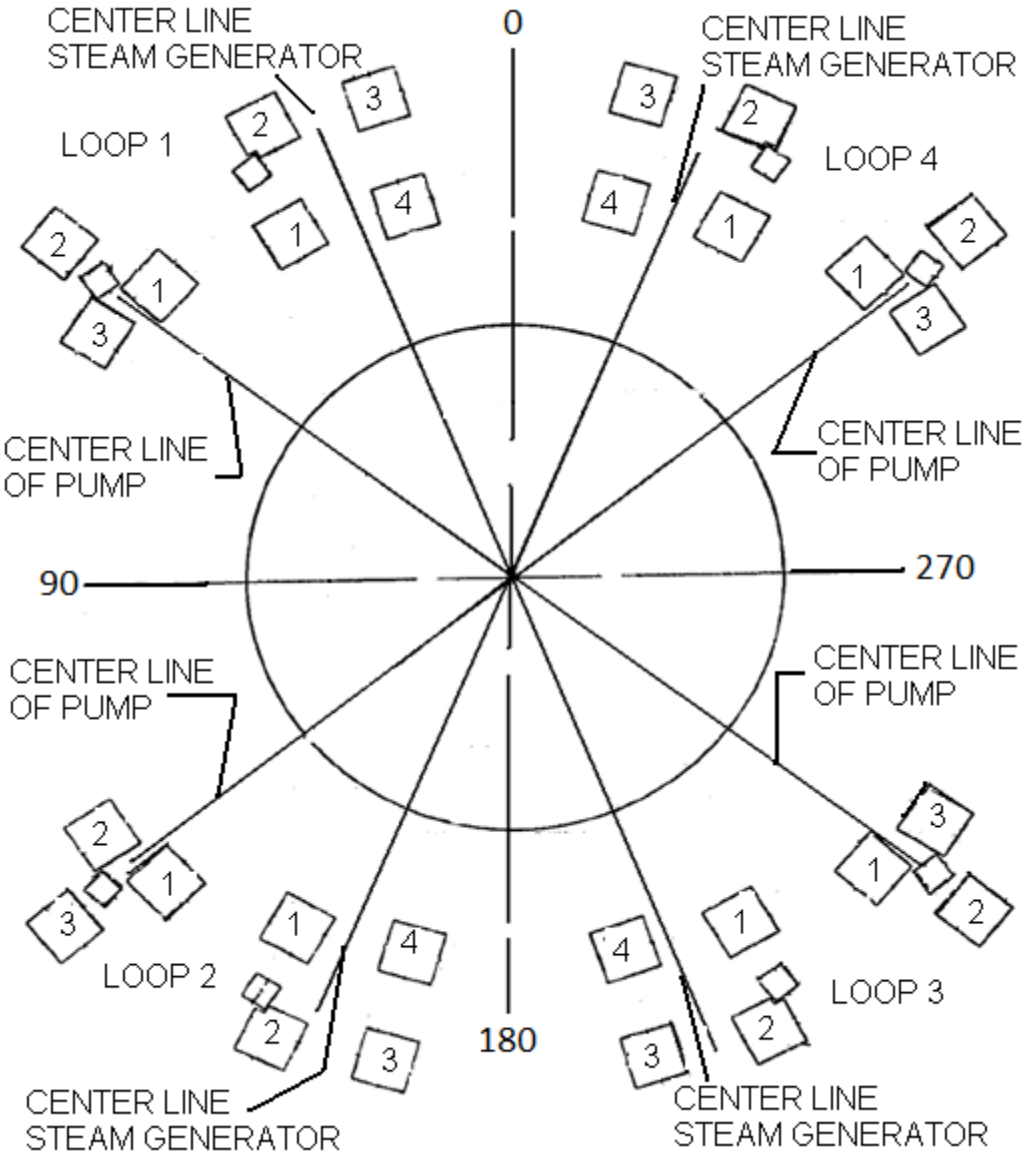

Attachment 14
(Page 28 of 35)

REACTOR COOLANT SYSTEM COMPONENT SUPPORT HOT FUNCTIONAL TEST 350° (345°-355°) TEMPERATURE DATA READINGS

Date _____

REACTOR COOLANT PUMP COLUMN DATA SHEET

RCP IDENTIFICATION RCP-1
DATE: _____
TIME: _____
INITIALS: _____
SYSTEM TEMP: _____

GAP NO.		COLUMNS		
		1	2	3
FRONT OR BACK	1			
SIDE	2			

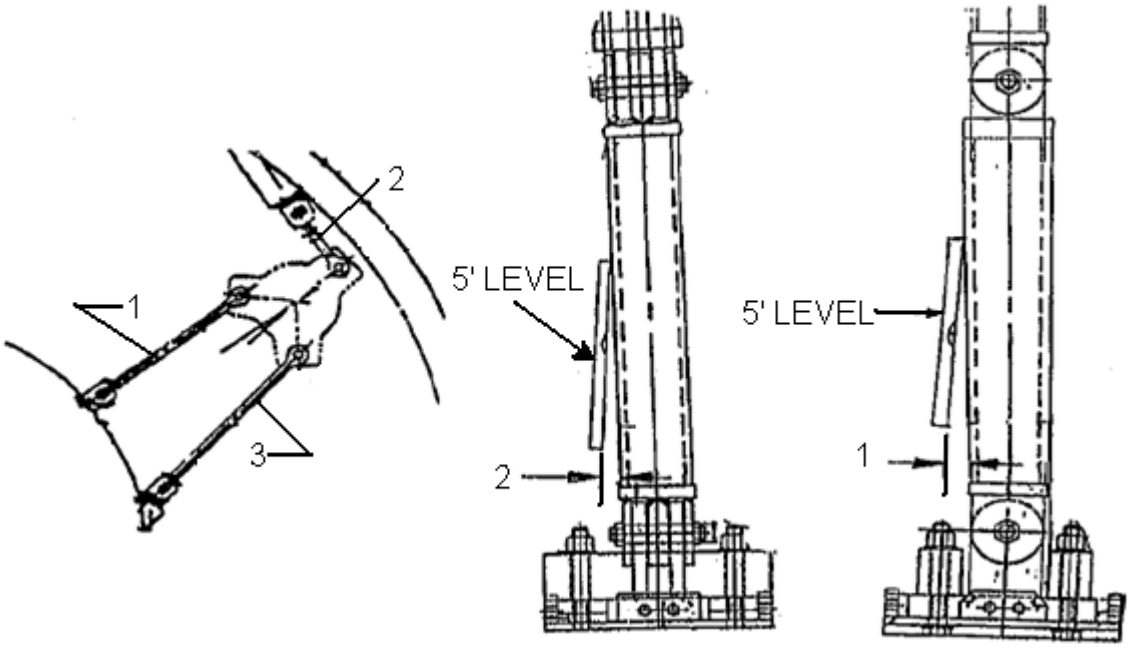

Attachment 14
(Page 29 of 35)

REACTOR COOLANT SYSTEM COMPONENT SUPPORT HOT FUNCTIONAL TEST 350° (345°-355°) TEMPERATURE DATA READINGS

Date _____

REACTOR COOLANT PUMP COLUMN DATA SHEET

RCP IDENTIFICATION RCP-2
DATE: _____
TIME: _____
INITIALS: _____
SYSTEM TEMP: _____

GAP NO.		COLUMNS		
		1	2	3
FRONT OR BACK	1			
SIDE	2			

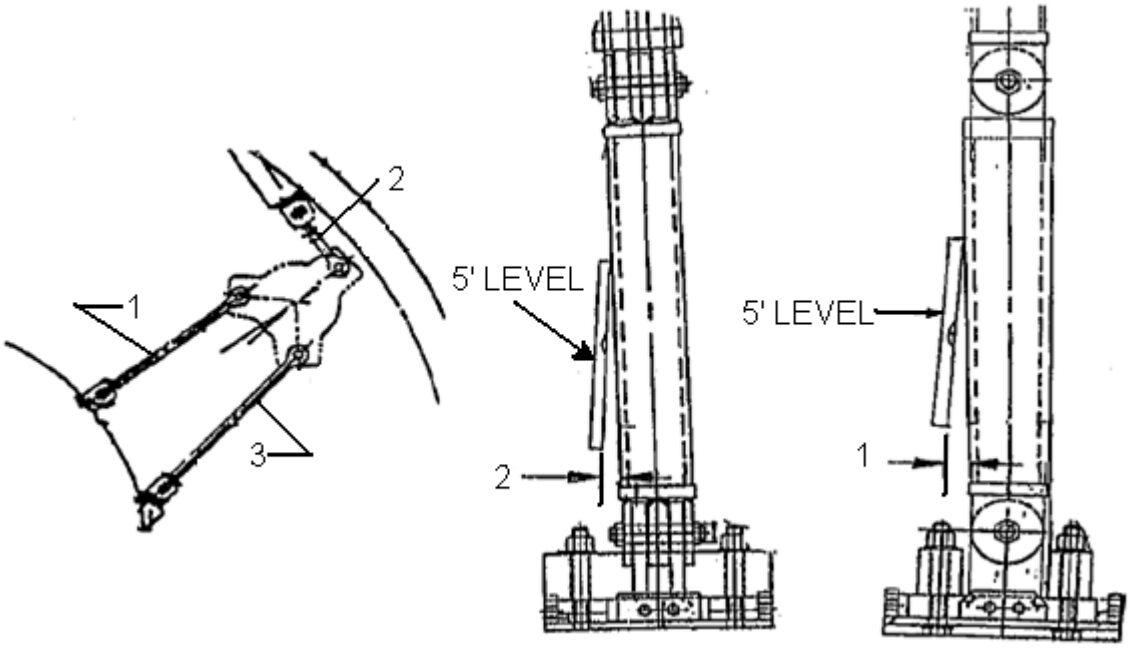

Attachment 14
(Page 30 of 35)

REACTOR COOLANT SYSTEM COMPONENT SUPPORT HOT FUNCTIONAL TEST 350° (345°-355°) TEMPERATURE DATA READINGS

Date _____

REACTOR COOLANT PUMP COLUMN DATA SHEET

RCP IDENTIFICATION RCP-3
DATE: _____
TIME: _____
INITIALS: _____
SYSTEM TEMP: _____

GAP NO.		COLUMNS		
		1	2	3
FRONT OR BACK	1			
SIDE	2			

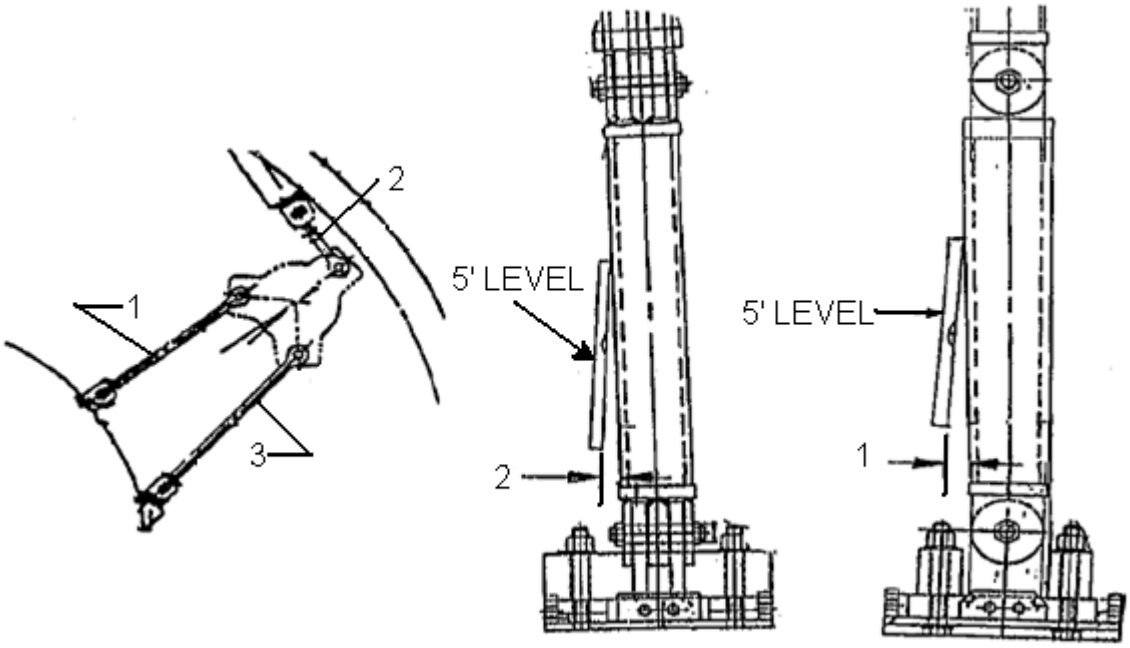

Attachment 14
(Page 31 of 35)

REACTOR COOLANT SYSTEM COMPONENT SUPPORT HOT FUNCTIONAL TEST 350° (345°-355°) TEMPERATURE DATA READINGS

Date _____

REACTOR COOLANT PUMP COLUMN DATA SHEET

RCP IDENTIFICATION RCP-4
DATE: _____
TIME: _____
INITIALS: _____
SYSTEM TEMP: _____

GAP NO.		COLUMNS		
		1	2	3
FRONT OR BACK	1			
SIDE	2			

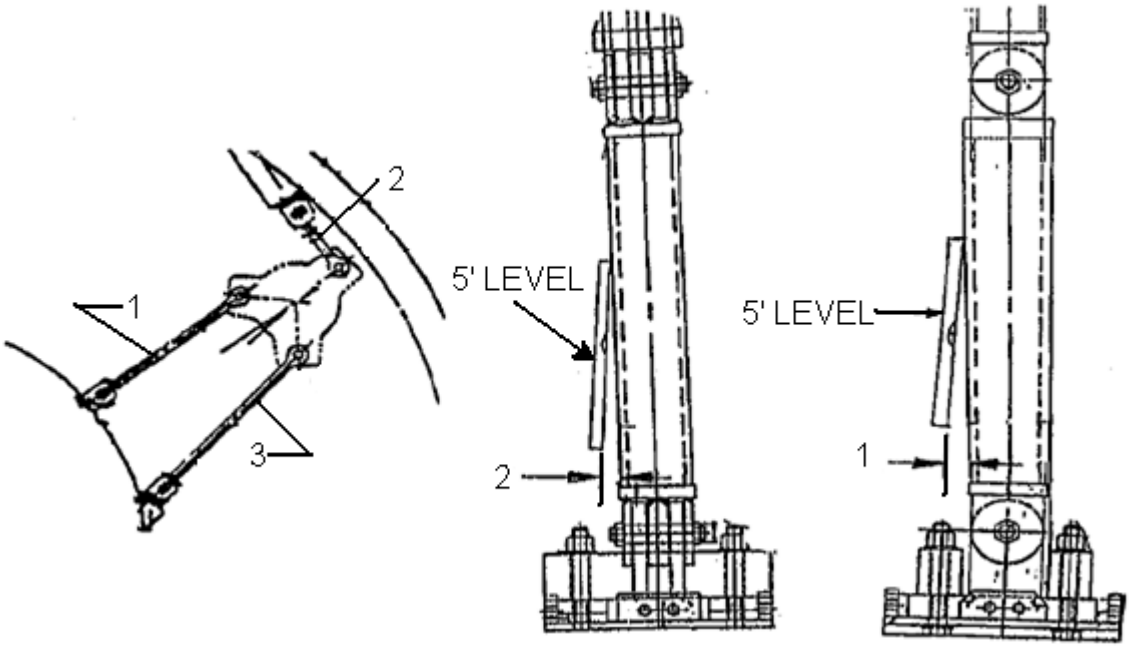

Attachment 14
(Page 32 of 35)

REACTOR COOLANT SYSTEM COMPONENT SUPPORT HOT FUNCTIONAL TEST 350° (345°-355°) TEMPERATURE DATA READINGS

Date _____

STEAM GENERATOR COLUMN DATA SHEET

SG IDENTIFICATION SG-1
DATE: _____
TIME: _____
INITIALS: _____
SYSTEM TEMP: _____

GAP NO.		COLUMNS			
		1	2	3	4
FRONT OR BACK	1				
SIDE	2				

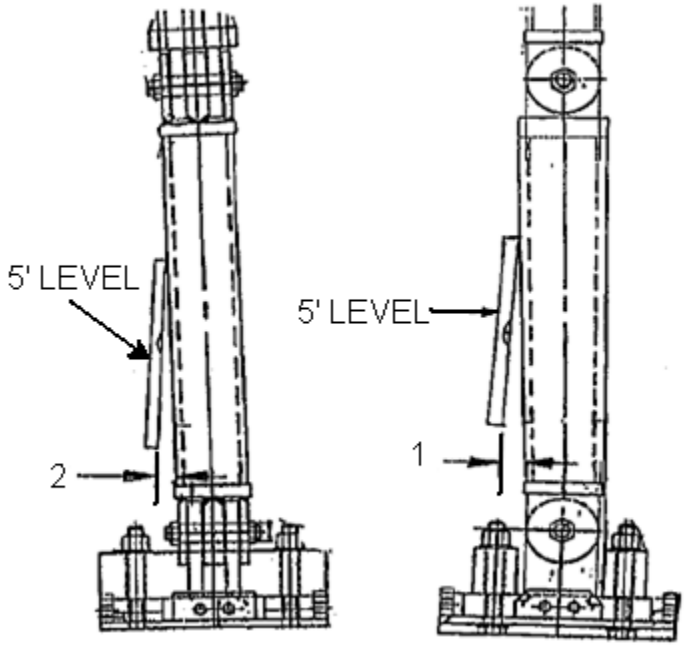

Attachment 14
(Page 33 of 35)

REACTOR COOLANT SYSTEM COMPONENT SUPPORT HOT FUNCTIONAL TEST 350° (345°-355°) TEMPERATURE DATA READINGS

Date _____

STEAM GENERATOR COLUMN DATA SHEET

SG IDENTIFICATION SG-2
DATE: _____
TIME: _____
INITIALS: _____
SYSTEM TEMP: _____

GAP NO.		COLUMNS			
		1	2	3	4
FRONT OR BACK	1				
SIDE	2				

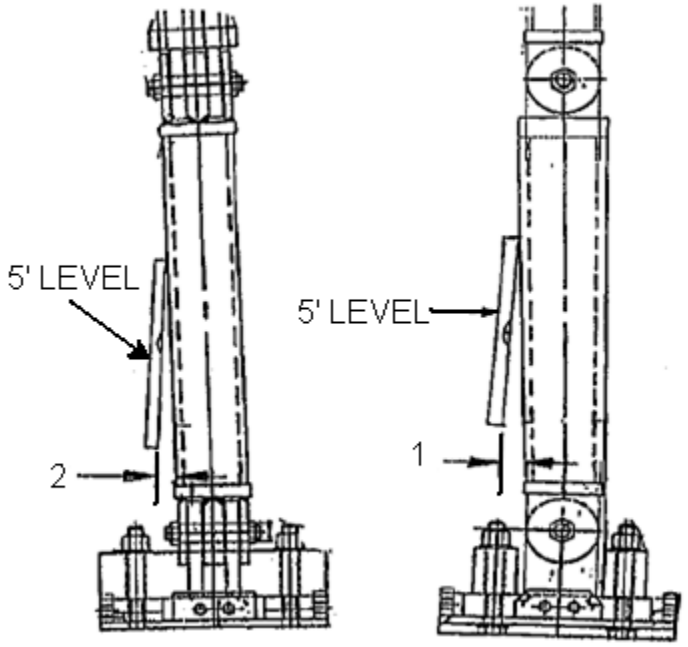

Attachment 14
(Page 34 of 35)

REACTOR COOLANT SYSTEM COMPONENT SUPPORT HOT FUNCTIONAL TEST 350° (345°-355°) TEMPERATURE DATA READINGS

Date _____

STEAM GENERATOR COLUMN DATA SHEET

SG IDENTIFICATION SG-3
DATE: _____
TIME: _____
INITIALS: _____
SYSTEM TEMP: _____

GAP NO.		COLUMNS			
		1	2	3	4
FRONT OR BACK	1				
SIDE	2				

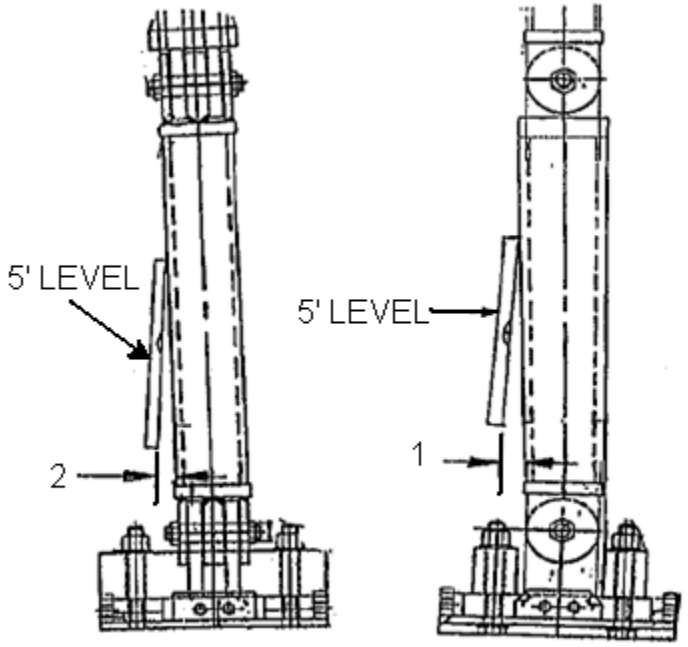

Attachment 14
(Page 35 of 35)

REACTOR COOLANT SYSTEM COMPONENT SUPPORT HOT FUNCTIONAL TEST 350° (345°-355°) TEMPERATURE DATA READINGS

Date _____

STEAM GENERATOR COLUMN DATA SHEET

SG IDENTIFICATION SG-4
DATE: _____
TIME: _____
INITIALS: _____
SYSTEM TEMP: _____

GAP NO.		COLUMNS			
		1	2	3	4
FRONT OR BACK	1				
SIDE	2				

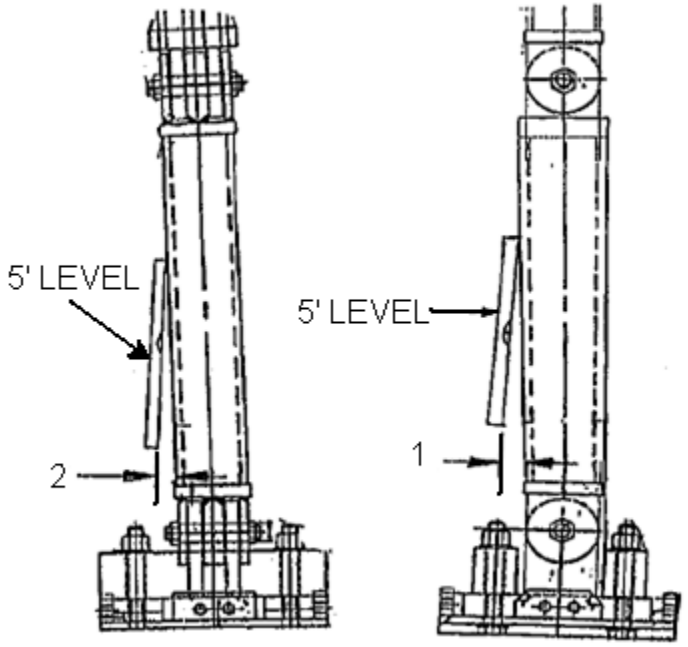

Attachment 15
(Page 1 of 35)

REACTOR COOLANT SYSTEM COMPONENT SUPPORT HOT FUNCTIONAL TEST 450° (445°-455°) TEMPERATURE DATA READINGS

Date _____

STEAM GENERATOR UPPER SUPPORT LAYOUT DETAIL

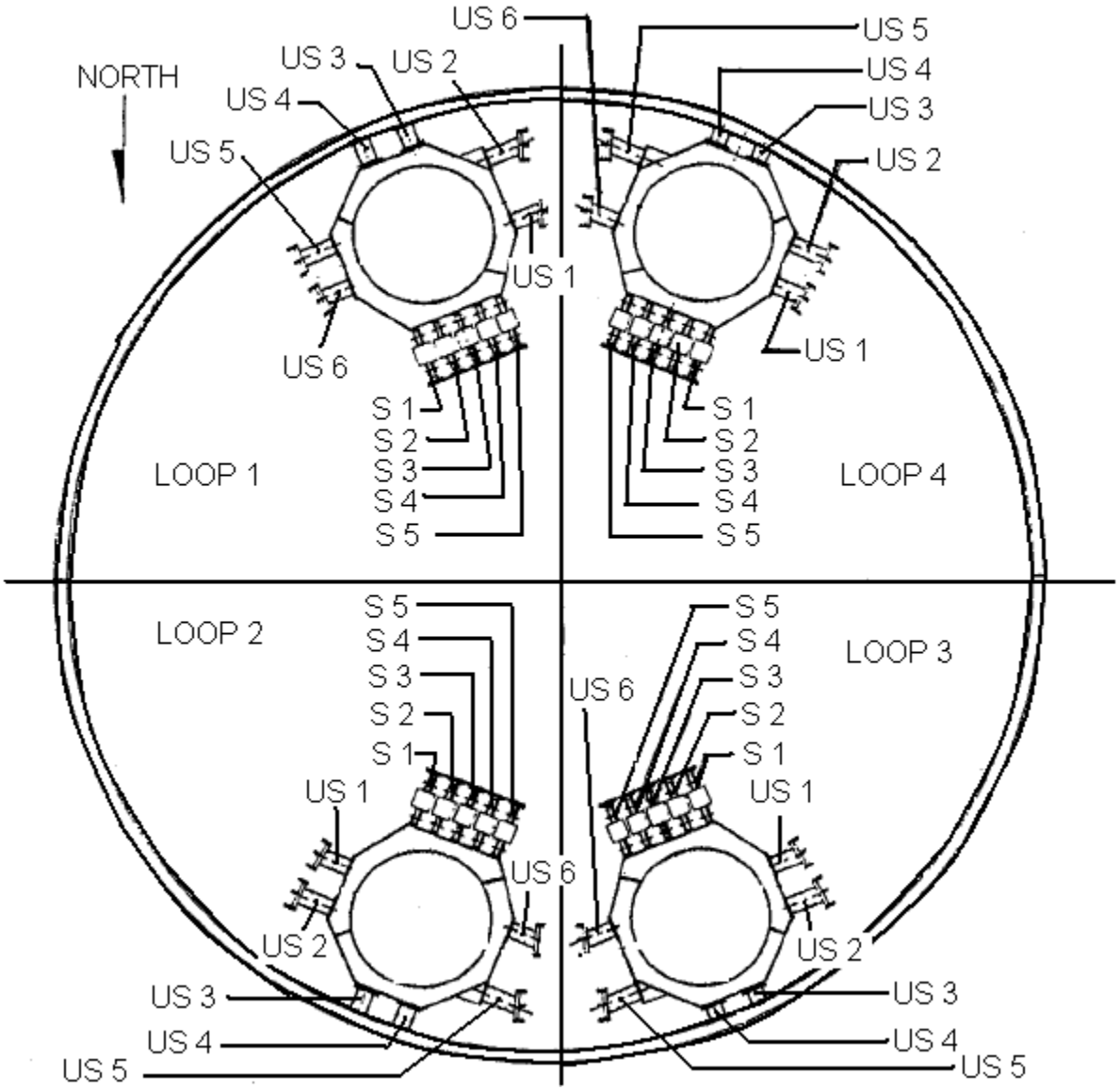

Attachment 15
(Page 2 of 35)

REACTOR COOLANT SYSTEM COMPONENT SUPPORT HOT FUNCTIONAL TEST 450° (445°-455°) TEMPERATURE DATA READINGS

Date _____

STEAM GENERATOR UPPER SUPPORT DYNAMIC SNUBBERS DATA SHEET

SG IDENTIFICATION SG-1
INITIALS: _____
SYSTEM TEMP: _____

ROD MEASUREMENT "A"

DATE	TIME	DYNAMIC SNUBBERS IDENTIFICATION				
		S-1	S-2	S-3	S-4	S-5

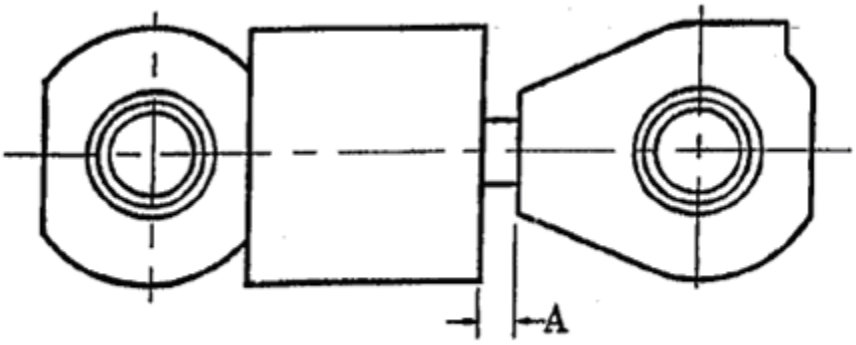

Attachment 15
(Page 3 of 35)

REACTOR COOLANT SYSTEM COMPONENT SUPPORT HOT FUNCTIONAL TEST 450° (445°-455°) TEMPERATURE DATA READINGS

Date _____

STEAM GENERATOR UPPER SUPPORT DYNAMIC SNUBBERS DATA SHEET

SG IDENTIFICATION SG-2
INITIALS: _____
SYSTEM TEMP: _____

ROD MEASUREMENT "A"

DATE	TIME	DYNAMIC SNUBBERS IDENTIFICATION				
		S-1	S-2	S-3	S-4	S-5

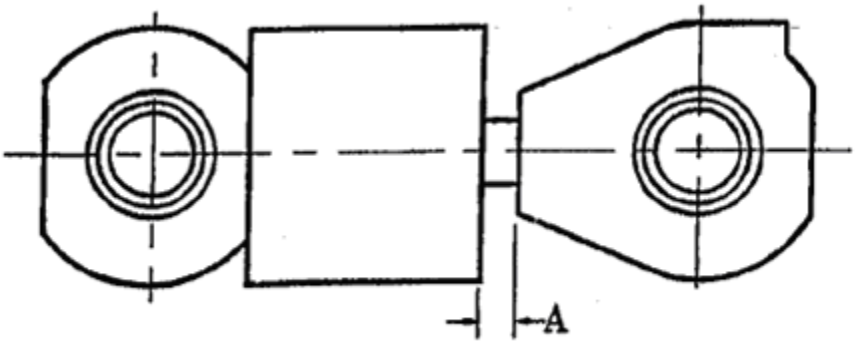

Attachment 15
(Page 4 of 35)

REACTOR COOLANT SYSTEM COMPONENT SUPPORT HOT FUNCTIONAL TEST 450° (445°-455°) TEMPERATURE DATA READINGS

Date _____

STEAM GENERATOR UPPER SUPPORT DYNAMIC SNUBBERS DATA SHEET

SG IDENTIFICATION SG-3
INITIALS: _____
SYSTEM TEMP: _____

ROD MEASUREMENT "A"

DATE	TIME	DYNAMIC SNUBBERS IDENTIFICATION				
		S-1	S-2	S-3	S-4	S-5

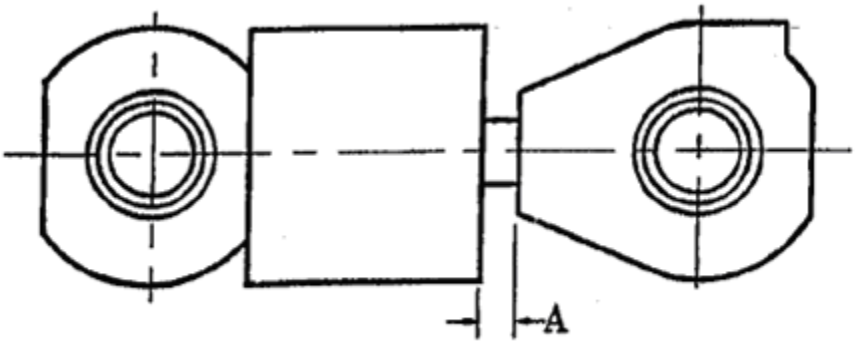

Attachment 15
(Page 5 of 35)

REACTOR COOLANT SYSTEM COMPONENT SUPPORT HOT FUNCTIONAL TEST 450° (445°-455°) TEMPERATURE DATA READINGS

Date _____

STEAM GENERATOR UPPER SUPPORT DYNAMIC SNUBBERS DATA SHEET

SG IDENTIFICATION SG-4
INITIALS: _____
SYSTEM TEMP: _____

ROD MEASUREMENT "A"

DATE	TIME	DYNAMIC SNUBBERS IDENTIFICATION				
		S-1	S-2	S-3	S-4	S-5

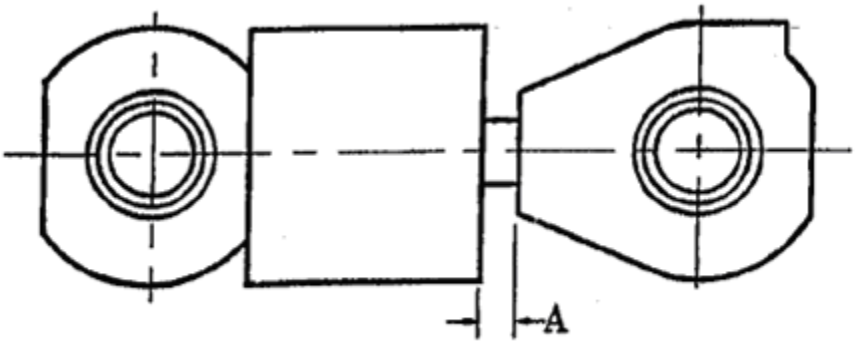

Attachment 15
(Page 6 of 35)

REACTOR COOLANT SYSTEM COMPONENT SUPPORT HOT FUNCTIONAL TEST 450° (445°-455°) TEMPERATURE DATA READINGS

Date _____

STEAM GENERATOR UPPER SUPPORT DATA SHEET

SG IDENTIFICATION SG-1
DATE: _____
TIME: _____
INITIALS: _____
SYSTEM TEMP: _____

GAP MEASUREMENTS

GAP NO.	BUMPER IDENTIFICATION					
	US-1	US-2	US-3	US-4	US-5	US-6
1						
2						
3						
4						

NOTE

Visual inspection only for US-1, US-2, US-5 and US-6. Record as “SAT” (Satisfactory) or “UNSAT” (Unsatisfactory for gap 1. If “UNSAT” is recorded, give brief description of condition in box provided (gaps 2, 3, and 4).

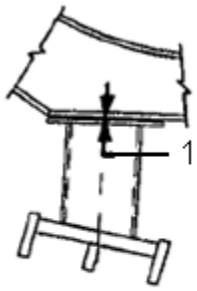

US-1 & US-2

US-5 & US-6

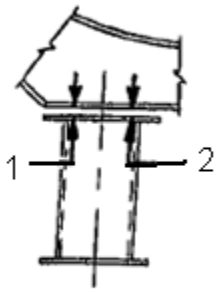

US-3 & US-4

Attachment 15
(Page 7 of 35)

REACTOR COOLANT SYSTEM COMPONENT SUPPORT HOT FUNCTIONAL TEST 450° (445°-455°) TEMPERATURE DATA READINGS

Date _____

STEAM GENERATOR UPPER SUPPORT DATA SHEET

SG IDENTIFICATION SG-2
DATE: _____
TIME: _____
INITIALS: _____
SYSTEM TEMP: _____

GAP MEASUREMENTS

GAP NO.	BUMPER IDENTIFICATION					
	US-1	US-2	US-3	US-4	US-5	US-6
1						
2						
3						
4						

NOTE

Visual inspection only for US-1, US-2, US-5 and US-6. Record as “SAT” (Satisfactory) or “UNSAT” (Unsatisfactory for gap 1. If “UNSAT” is recorded, give brief description of condition in box provided (gaps 2, 3, and 4).

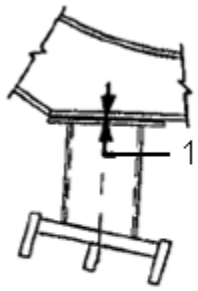

US-1 & US-2

US-5 & US-6

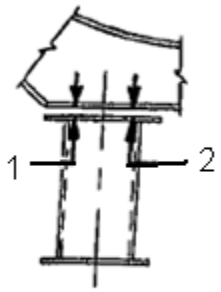

US-3 & US-4

Attachment 15
(Page 8 of 35)

REACTOR COOLANT SYSTEM COMPONENT SUPPORT HOT FUNCTIONAL TEST 450° (445°-455°) TEMPERATURE DATA READINGS

Date _____

STEAM GENERATOR UPPER SUPPORT DATA SHEET

SG IDENTIFICATION SG-3
DATE: _____
TIME: _____
INITIALS: _____
SYSTEM TEMP: _____

GAP MEASUREMENTS

GAP NO.	BUMPER IDENTIFICATION					
	US-1	US-2	US-3	US-4	US-5	US-6
1						
2						
3						
4						

NOTE

Visual inspection only for US-1, US-2, US-5 and US-6. Record as “SAT” (Satisfactory) or “UNSAT” (Unsatisfactory for gap 1. If “UNSAT” is recorded, give brief description of condition in box provided (gaps 2, 3, and 4).

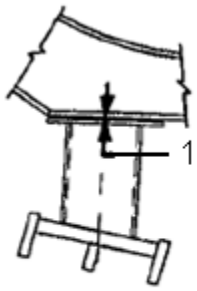

US-1 & US-2

US-5 & US-6

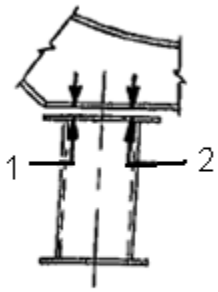

US-3 & US-4

Attachment 15
(Page 9 of 35)

REACTOR COOLANT SYSTEM COMPONENT SUPPORT HOT FUNCTIONAL TEST 450° (445°-455°) TEMPERATURE DATA READINGS

Date _____

STEAM GENERATOR UPPER SUPPORT DATA SHEET

SG IDENTIFICATION SG-4
DATE: _____
TIME: _____
INITIALS: _____
SYSTEM TEMP: _____

GAP MEASUREMENTS

GAP NO.	BUMPER IDENTIFICATION					
	US-1	US-2	US-3	US-4	US-5	US-6
1						
2						
3						
4						

NOTE

Visual inspection only for US-1, US-2, US-5 and US-6. Record as “SAT” (Satisfactory) or “UNSAT” (Unsatisfactory for gap 1. If “UNSAT” is recorded, give brief description of condition in box provided (gaps 2, 3, and 4).

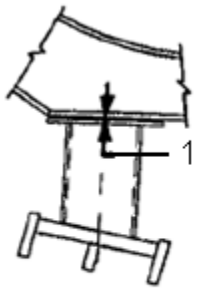

US-1 & US-2

US-5 & US-6

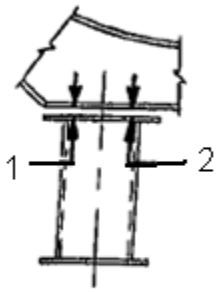

US-3 & US-4

Attachment 15
(Page 10 of 35)

REACTOR COOLANT SYSTEM COMPONENT SUPPORT HOT FUNCTIONAL TEST 450° (445°-455°) TEMPERATURE DATA READINGS

Date _____

STEAM GENERATOR LOWER SUPPORT LAYOUT DETAILS

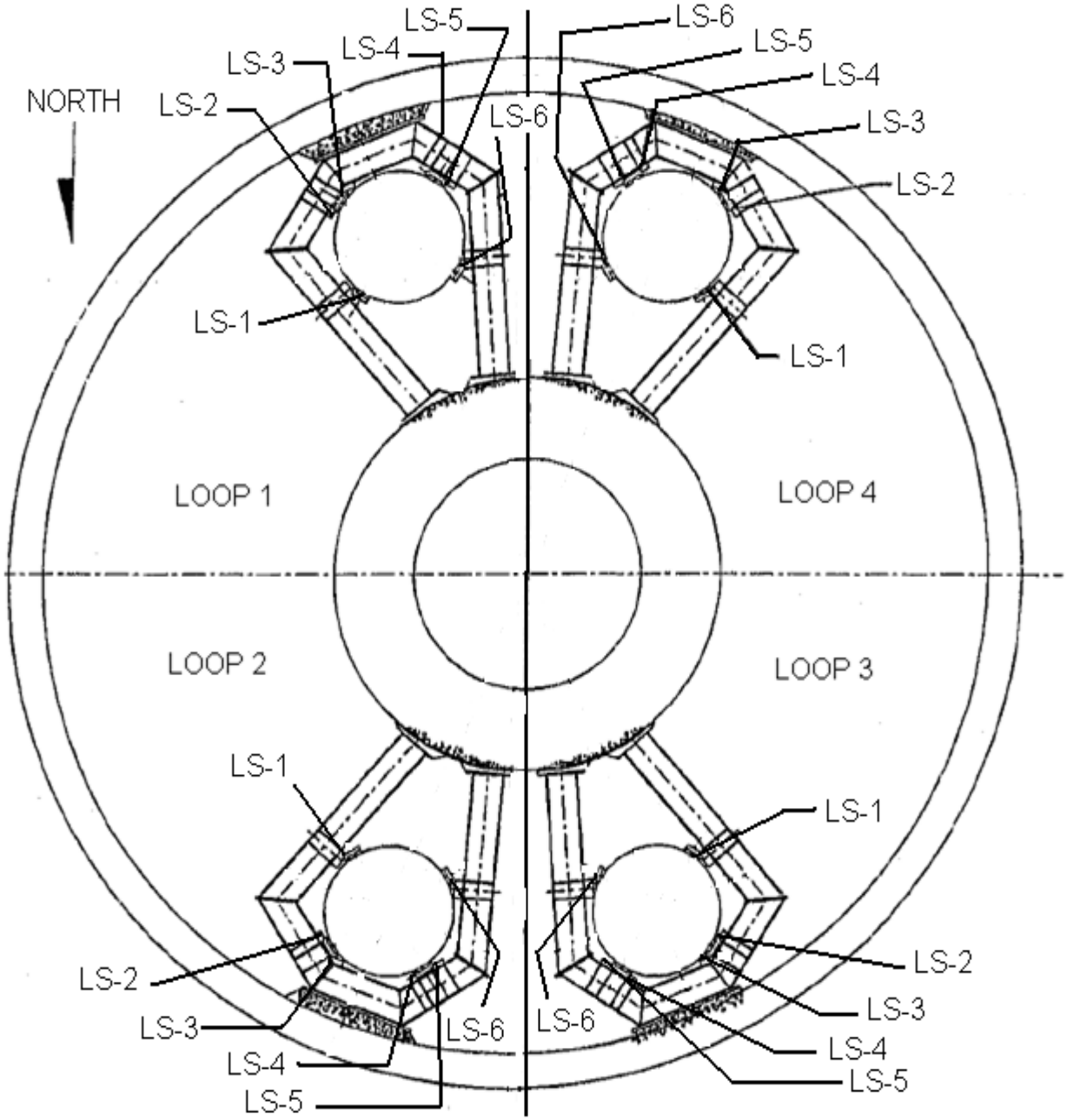

Attachment 15
(Page 11 of 35)

REACTOR COOLANT SYSTEM COMPONENT SUPPORT HOT FUNCTIONAL TEST 450° (445°-455°) TEMPERATURE DATA READINGS

Date _____

STEAM GENERATOR LOWER SUPPORT DATA SHEET

SG IDENTIFICATION SG-1
DATE: _____
TIME: _____
INITIALS: _____
SYSTEM TEMP: _____

GAP MEASUREMENTS

GAP NO.	BUMPER IDENTIFICATION					
	LS-1	LS-2	LS-3	LS-4	LS-5	LS-6
1						
2						
3						
4						

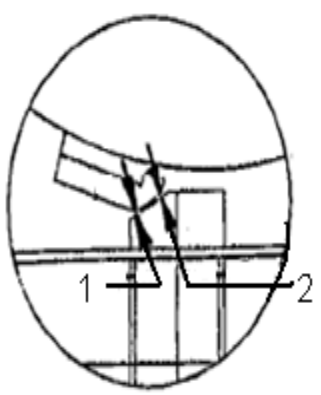

LS-1

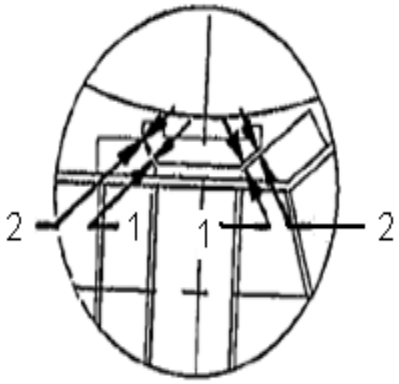

LS-2 & LS-3

LS-4 & LS-5

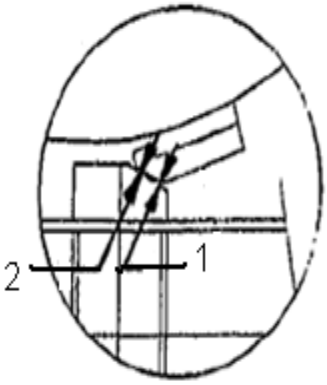

LS-6

Attachment 15
(Page 12 of 35)

REACTOR COOLANT SYSTEM COMPONENT SUPPORT HOT FUNCTIONAL TEST 450° (445°-455°) TEMPERATURE DATA READINGS

Date _____

STEAM GENERATOR LOWER SUPPORT DATA SHEET

SG IDENTIFICATION SG-2
DATE: _____
TIME: _____
INITIALS: _____
SYSTEM TEMP: _____

GAP MEASUREMENTS

GAP NO.	BUMPER IDENTIFICATION					
	LS-1	LS-2	LS-3	LS-4	LS-5	LS-6
1						
2						
3						
4						

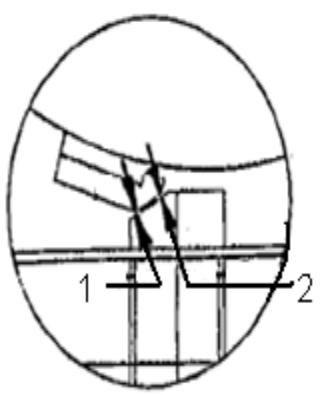

LS-1

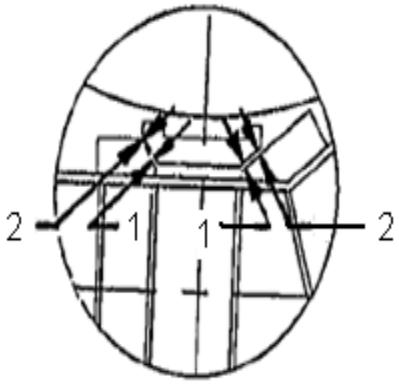

LS-2 & LS-3

LS-4 & LS-5

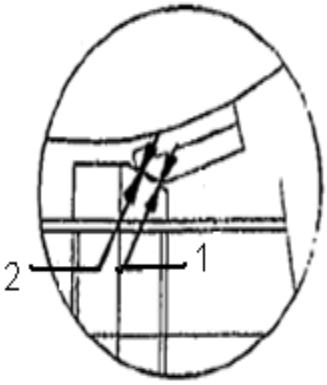

LS-6

Attachment 15
(Page 13 of 35)

REACTOR COOLANT SYSTEM COMPONENT SUPPORT HOT FUNCTIONAL TEST 450° (445°-455°) TEMPERATURE DATA READINGS

Date _____

STEAM GENERATOR LOWER SUPPORT DATA SHEET

SG IDENTIFICATION SG-3
DATE: _____
TIME: _____
INITIALS: _____
SYSTEM TEMP: _____

GAP MEASUREMENTS

GAP NO.	BUMPER IDENTIFICATION					
	LS-1	LS-2	LS-3	LS-4	LS-5	LS-6
1						
2						
3						
4						

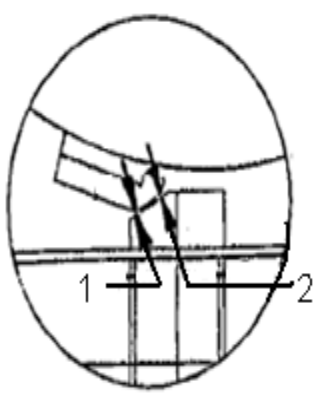

LS-1

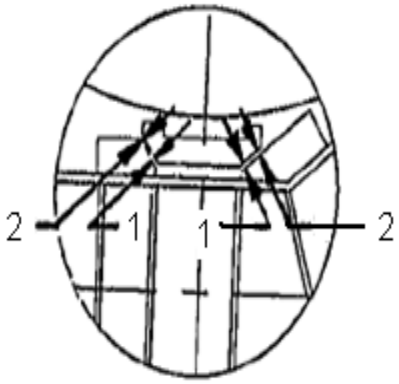

LS-2 & LS-3

LS-4 & LS-5

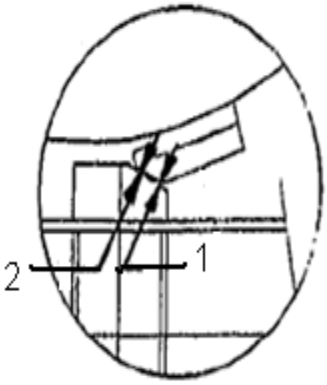

LS-6

Attachment 15
(Page 14 of 35)

REACTOR COOLANT SYSTEM COMPONENT SUPPORT HOT FUNCTIONAL TEST 450° (445°-455°) TEMPERATURE DATA READINGS

Date _____

STEAM GENERATOR LOWER SUPPORT DATA SHEET

SG IDENTIFICATION SG-4
DATE: _____
TIME: _____
INITIALS: _____
SYSTEM TEMP: _____

GAP MEASUREMENTS

GAP NO.	BUMPER IDENTIFICATION					
	LS-1	LS-2	LS-3	LS-4	LS-5	LS-6
1						
2						
3						
4						

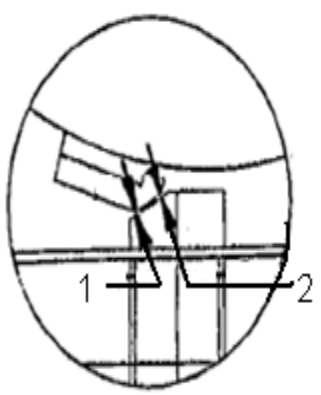

LS-1

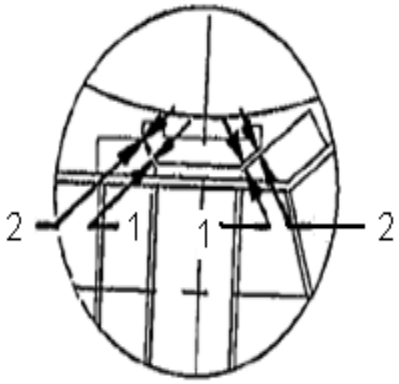

LS-2 & LS-3

LS-4 & LS-5

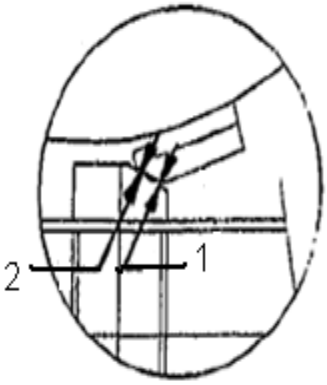

LS-6

Attachment 15
(Page 15 of 35)

REACTOR COOLANT SYSTEM COMPONENT SUPPORT HOT FUNCTIONAL TEST 450° (445°-455°) TEMPERATURE DATA READINGS

Date _____

REACTOR COOLANT PUMP TIE ROD LAYOUT DETAILS

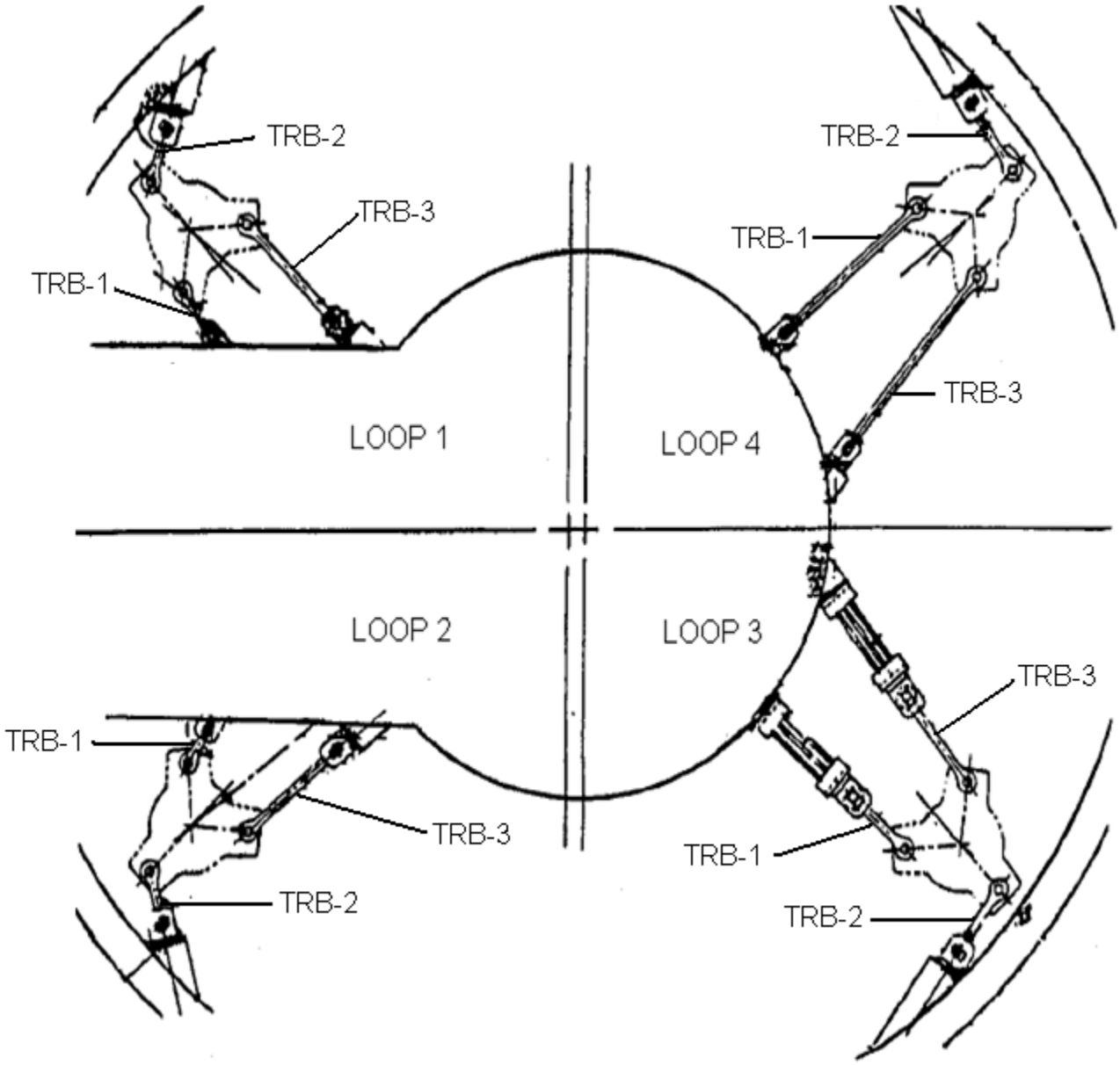

Attachment 15
(Page 16 of 35)

REACTOR COOLANT SYSTEM COMPONENT SUPPORT HOT FUNCTIONAL TEST 450° (445°-455°) TEMPERATURE DATA READINGS

Date _____

REACTOR COOLANT PUMP TIE ROD DATA SHEET

RCP IDENTIFICATION RCP-1
DATE: _____
TIME: _____
INITIALS: _____
SYSTEM TEMP: _____

GAP MEASUREMENTS

GAP NO.		TIE ROD BRACKET IDENTIFICATION		
		TRB-1 (INSIDE)	TRB-2 (BACK)	TRB-3 (OUTSIDE)
TOP	1F			
	1B			
BOT	2F			
	2B			

NOTE

"F" is the front side (shimmed side) of the pin.

"B" is the back side (un-shimmed side) of the pin.

Record a minimum of one set of gaps (i.e., 1F and 1B or 2F and 2B).

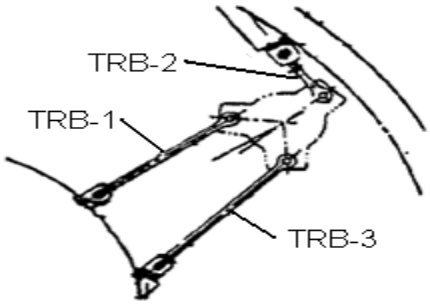

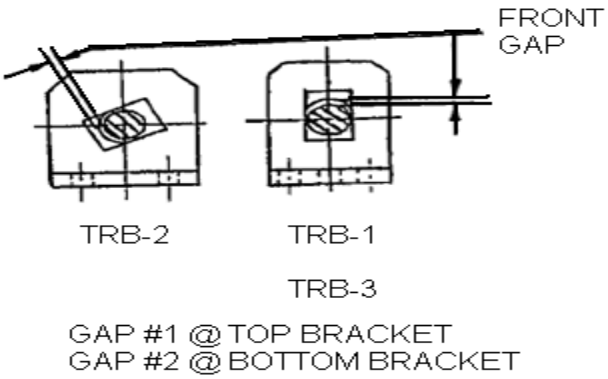

Attachment 15
(Page 17 of 35)

REACTOR COOLANT SYSTEM COMPONENT SUPPORT HOT FUNCTIONAL TEST 450° (445°-455°) TEMPERATURE DATA READINGS

Date _____

REACTOR COOLANT PUMP TIE ROD DATA SHEET

RCP IDENTIFICATION RCP-2
DATE: _____
TIME: _____
INITIALS: _____
SYSTEM TEMP: _____

GAP MEASUREMENTS

GAP NO.		TIE ROD BRACKET IDENTIFICATION		
		TRB-1 (INSIDE)	TRB-2 (BACK)	TRB-3 (OUTSIDE)
TOP	1F			
	1B			
BOT	2F			
	2B			

NOTE

"F" is the front side (shimmed side) of the pin.

"B" is the back side (un-shimmed side) of the pin.

Record a minimum of one set of gaps (i.e., 1F and 1B or 2F and 2B).

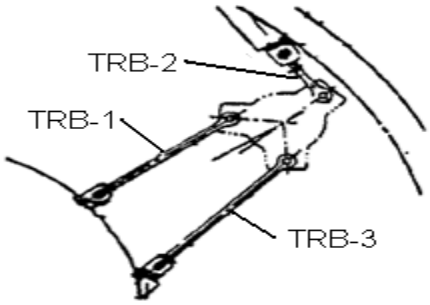

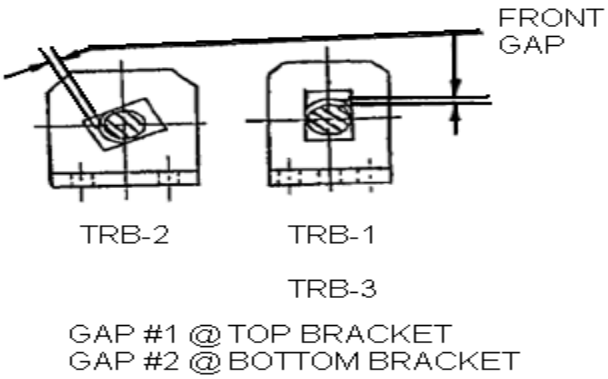

Attachment 15
(Page 18 of 35)

REACTOR COOLANT SYSTEM COMPONENT SUPPORT HOT FUNCTIONAL TEST 450° (445°-455°) TEMPERATURE DATA READINGS

Date _____

REACTOR COOLANT PUMP TIE ROD DATA SHEET

RCP IDENTIFICATION RCP-3
DATE: _____
TIME: _____
INITIALS: _____
SYSTEM TEMP: _____

GAP MEASUREMENTS

GAP NO.		TIE ROD BRACKET IDENTIFICATION		
		TRB-1 (INSIDE)	TRB-2 (BACK)	TRB-3 (OUTSIDE)
TOP	1F			
	1B			
BOT	2F			
	2B			

NOTE

"F" is the front side (shimmed side) of the pin.

"B" is the back side (un-shimmed side) of the pin.

Record a minimum of one set of gaps (i.e., 1F and 1B or 2F and 2B).

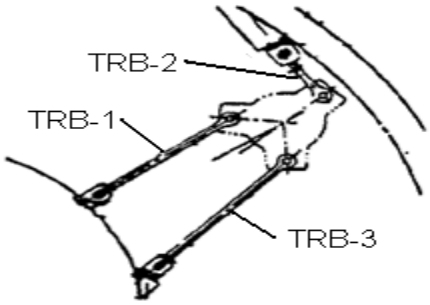

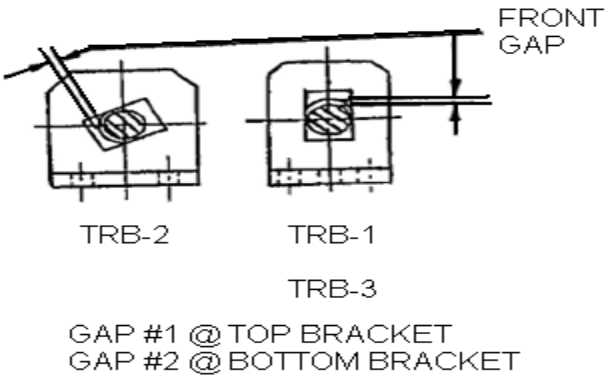

Attachment 15
(Page 19 of 35)

REACTOR COOLANT SYSTEM COMPONENT SUPPORT HOT FUNCTIONAL TEST 450° (445°-455°) TEMPERATURE DATA READINGS

Date _____

REACTOR COOLANT PUMP TIE ROD DATA SHEET

RCP IDENTIFICATION RCP-4
DATE: _____
TIME: _____
INITIALS: _____
SYSTEM TEMP: _____

GAP MEASUREMENTS

GAP NO.		TIE ROD BRACKET IDENTIFICATION		
		TRB-1 (INSIDE)	TRB-2 (BACK)	TRB-3 (OUTSIDE)
TOP	1F			
	1B			
BOT	2F			
	2B			

NOTE

"F" is the front side (shimmed side) of the pin.

"B" is the back side (un-shimmed side) of the pin.

Record a minimum of one set of gaps (i.e., 1F and 1B or 2F and 2B).

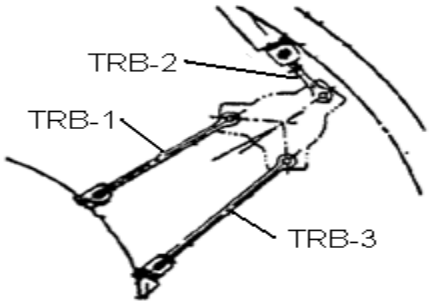

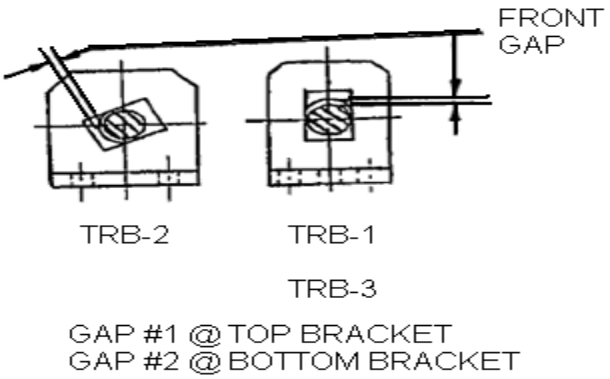

Attachment 15
(Page 20 of 35)

REACTOR COOLANT SYSTEM COMPONENT SUPPORT HOT FUNCTIONAL TEST 450° (445°-455°) TEMPERATURE DATA READINGS

Date _____

CROSS OVER LEG ELBOW SUPPORT LAYOUT DETAILS

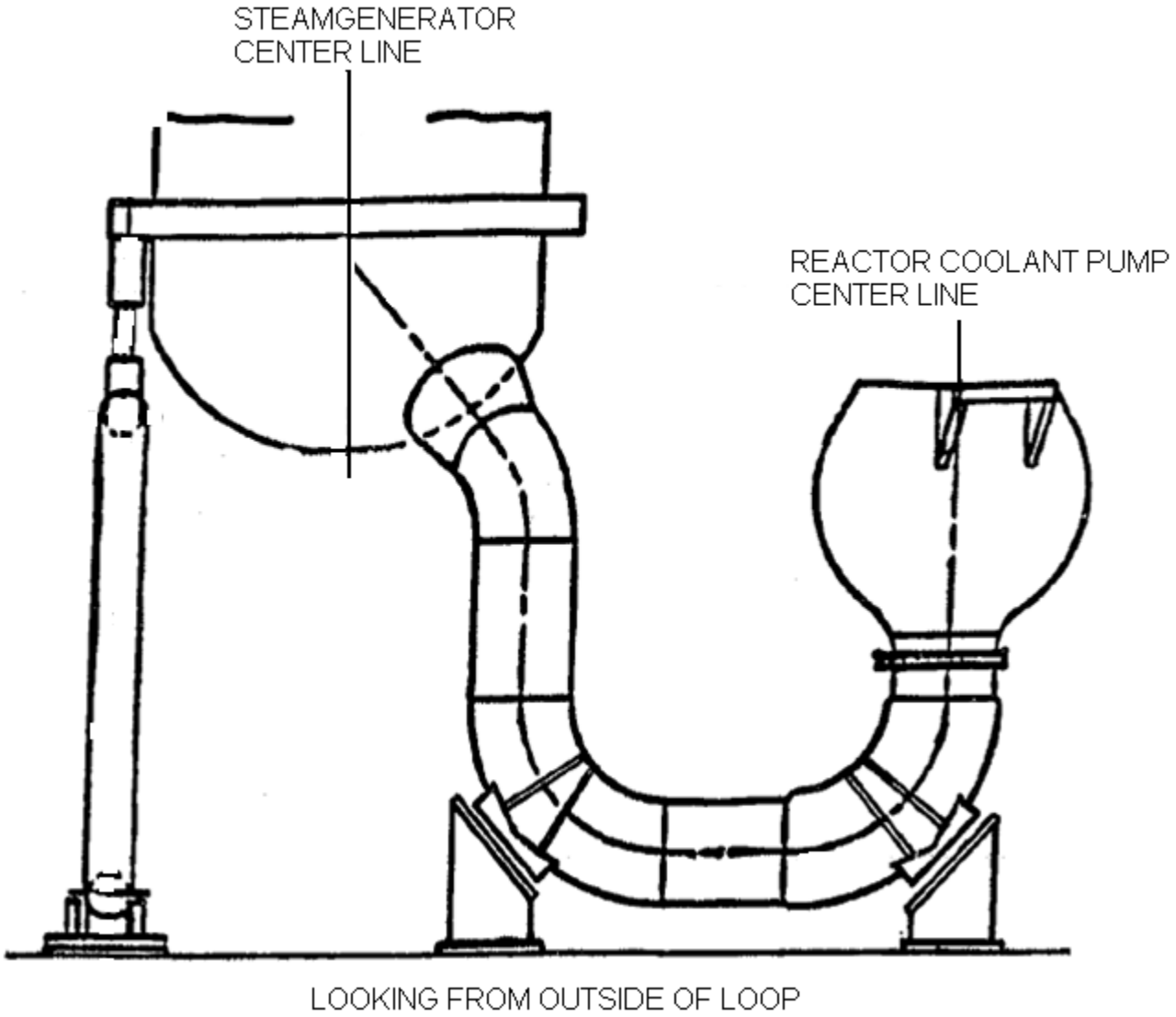

Attachment 15
(Page 21 of 35)

REACTOR COOLANT SYSTEM COMPONENT SUPPORT HOT FUNCTIONAL TEST 450° (445°-455°) TEMPERATURE DATA READINGS

Date _____

CROSS OVER LEG ELBOW SUPPORT DATA SHEET

LOOP IDENTIFICATION SG-1
DATE: _____
TIME: _____
INITIALS: _____
SYSTEM TEMP: _____

GAP MEASUREMENTS

SUPPORT	GAP 1	GAP 2	GAP 3	GAP 4
XLSG				
XLRCP				

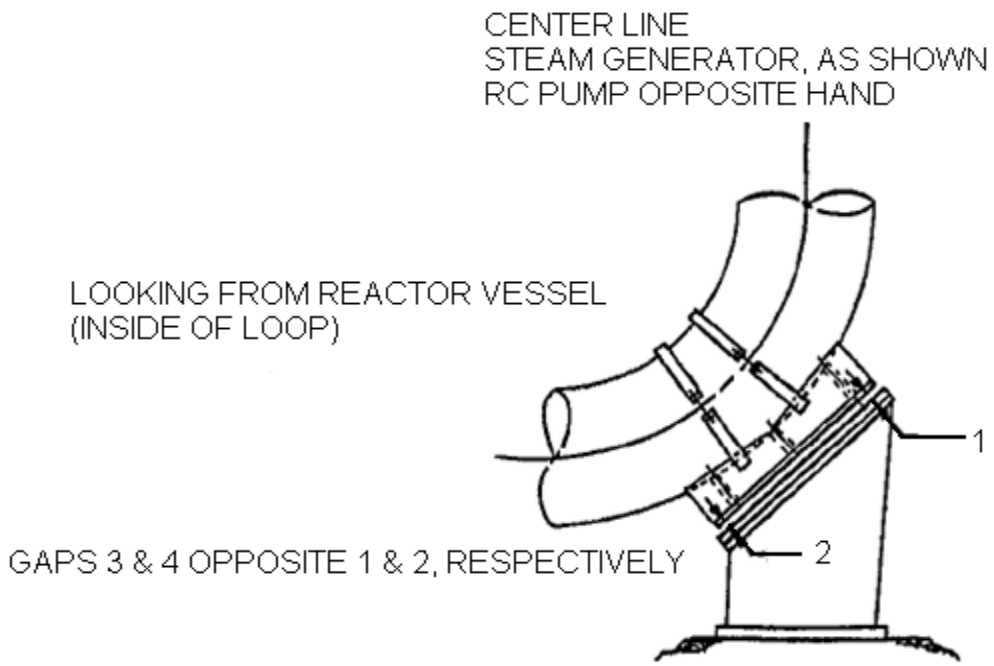

Attachment 15
(Page 22 of 35)

REACTOR COOLANT SYSTEM COMPONENT SUPPORT HOT FUNCTIONAL TEST 450° (445°-455°) TEMPERATURE DATA READINGS

Date _____

CROSS OVER LEG ELBOW SUPPORT DATA SHEET

LOOP IDENTIFICATION SG-2
DATE: _____
TIME: _____
INITIALS: _____
SYSTEM TEMP: _____

GAP MEASUREMENTS

SUPPORT	GAP 1	GAP 2	GAP 3	GAP 4
XLSG				
XLRCP				

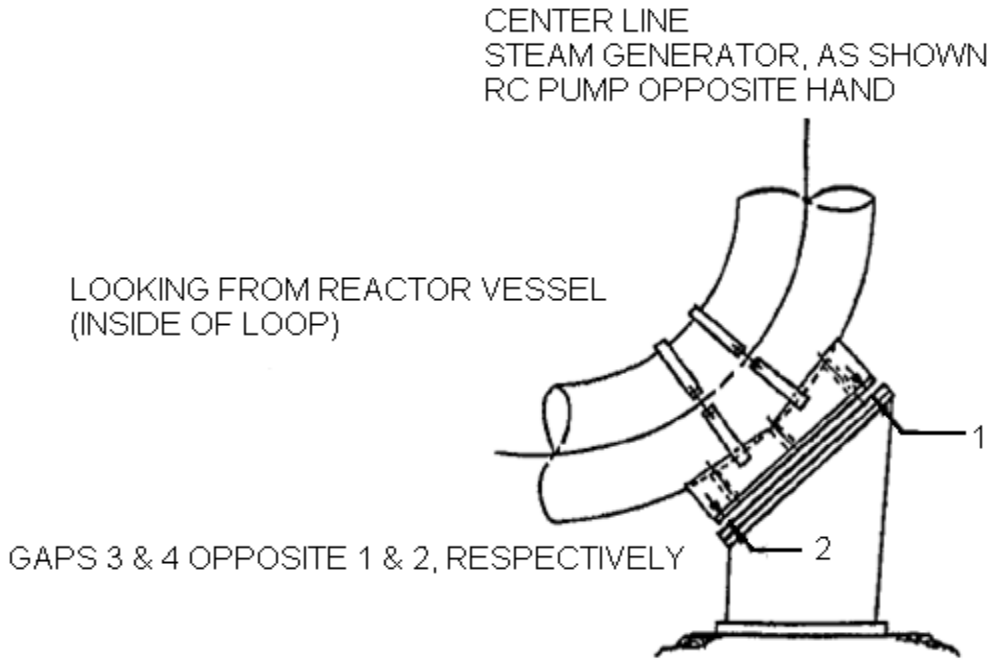

Attachment 15
(Page 23 of 35)

REACTOR COOLANT SYSTEM COMPONENT SUPPORT HOT FUNCTIONAL TEST 450° (445°-455°) TEMPERATURE DATA READINGS

Date _____

CROSS OVER LEG ELBOW SUPPORT DATA SHEET

LOOP IDENTIFICATION SG-3
DATE: _____
TIME: _____
INITIALS: _____
SYSTEM TEMP: _____

GAP MEASUREMENTS

SUPPORT	GAP 1	GAP 2	GAP 3	GAP 4
XLSG				
XLRCP				

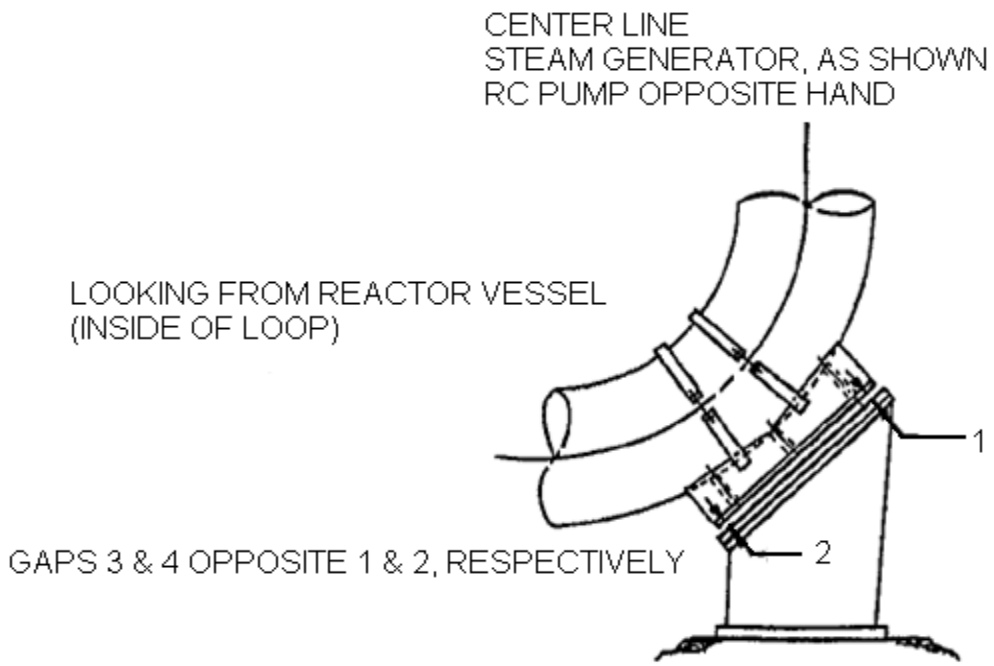

Attachment 15
(Page 24 of 35)

REACTOR COOLANT SYSTEM COMPONENT SUPPORT HOT FUNCTIONAL TEST 450° (445°-455°) TEMPERATURE DATA READINGS

Date _____

CROSS OVER LEG ELBOW SUPPORT DATA SHEET

LOOP IDENTIFICATION SG-4
DATE: _____
TIME: _____
INITIALS: _____
SYSTEM TEMP: _____

GAP MEASUREMENTS

SUPPORT	GAP 1	GAP 2	GAP 3	GAP 4
XLSG				
XLRCP				

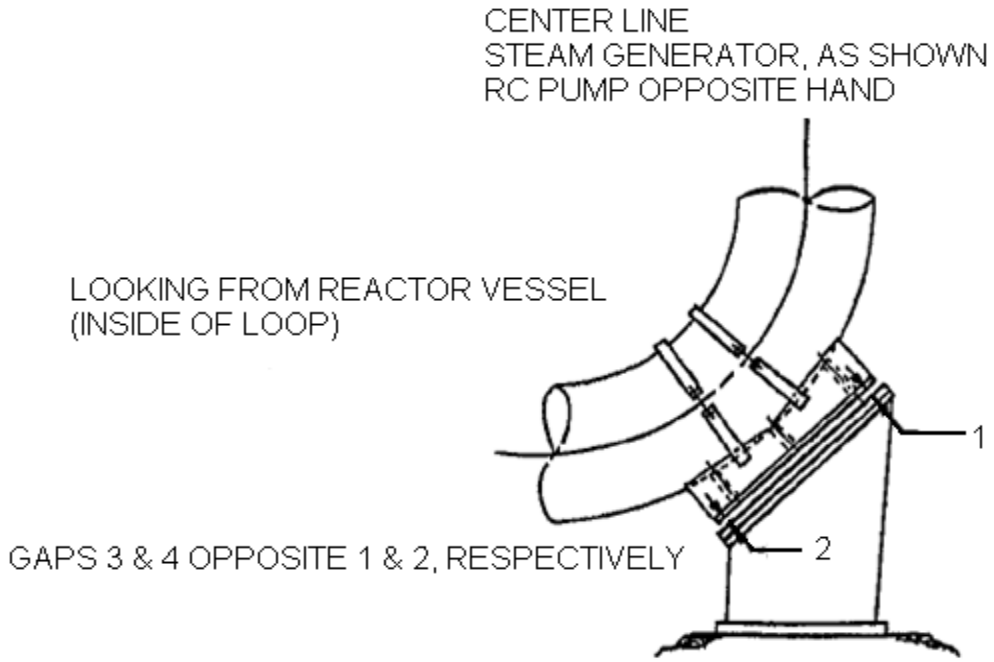

Attachment 15
(Page 25 of 35)

REACTOR COOLANT SYSTEM COMPONENT SUPPORT HOT FUNCTIONAL TEST 450° (445°-455°) TEMPERATURE DATA READINGS

Date _____

PRESSURIZER UPPER SUPPORTS LAYOUT DETAILS

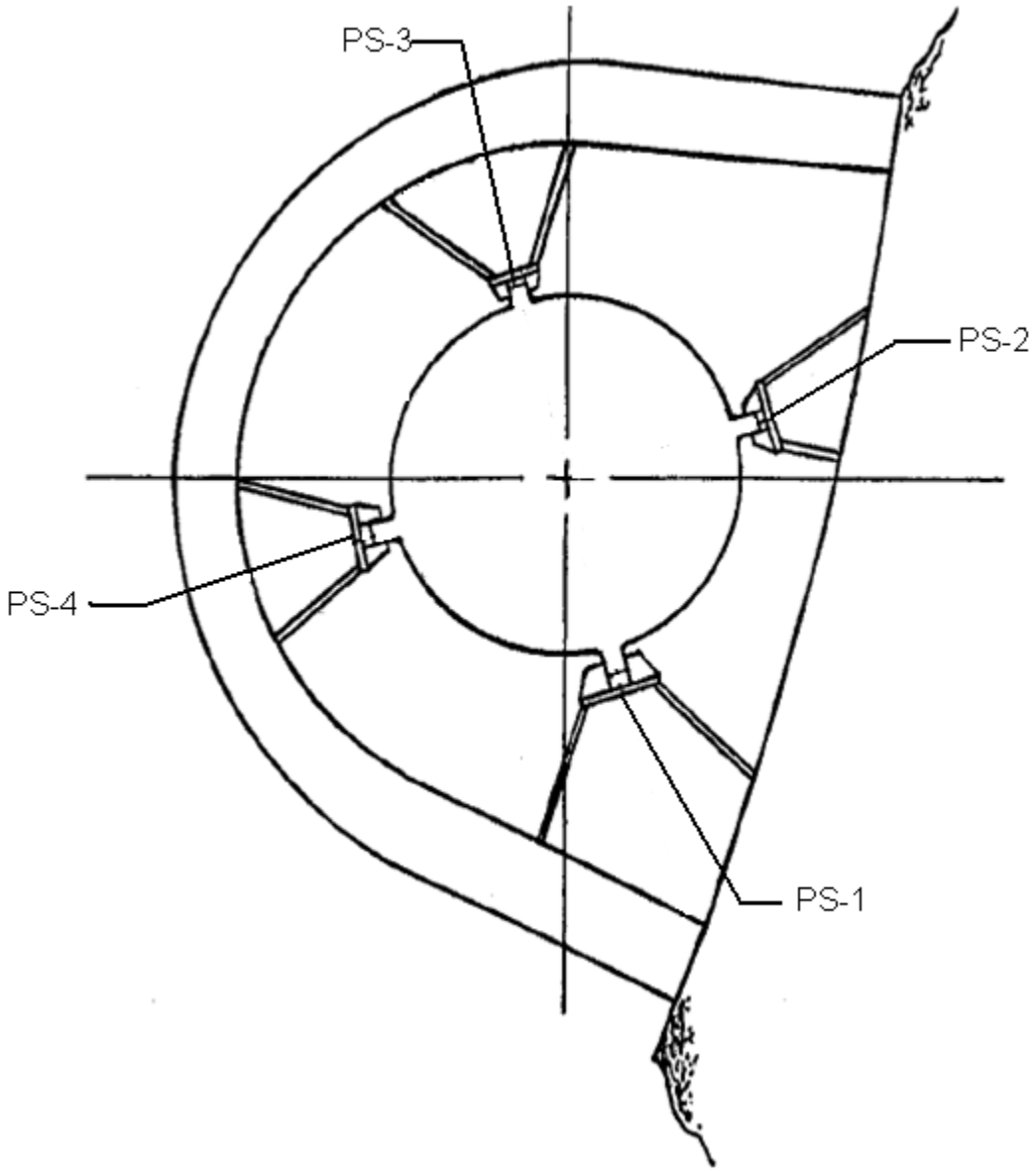

Attachment 15
(Page 26 of 35)

REACTOR COOLANT SYSTEM COMPONENT SUPPORT HOT FUNCTIONAL TEST 450° (445°-455°) TEMPERATURE DATA READINGS

Date _____

PRESSURIZER UPPER SUPPORT DATA SHEET

DATE: _____
TIME: _____
INITIALS: _____
SYSTEM TEMP: _____

GAP MEASUREMENTS

GAP NO.	BUMPER IDENTIFICATION			
	PS-1	PS-2	PS-3	PS-4
1				
2				
3				
4				
5				
6				
7				
8				

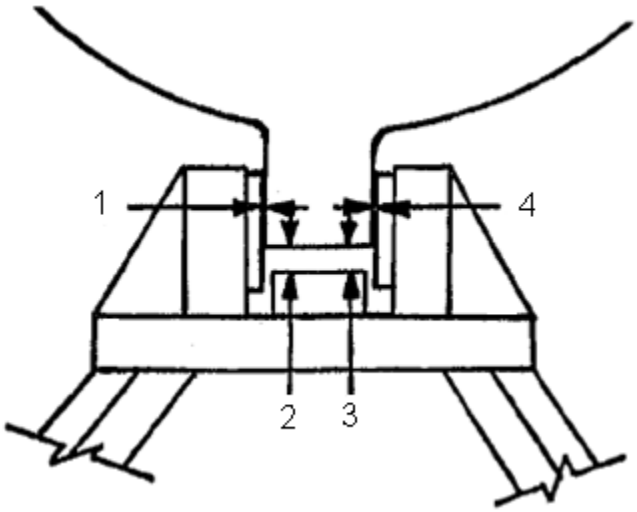

Attachment 15
(Page 27 of 35)

REACTOR COOLANT SYSTEM COMPONENT SUPPORT HOT FUNCTIONAL TEST 450° (445°-455°) TEMPERATURE DATA READINGS

Date _____

GENERAL LAYOUT OF STEAM GENERATORS AND REACTOR COOLANT PUMPS

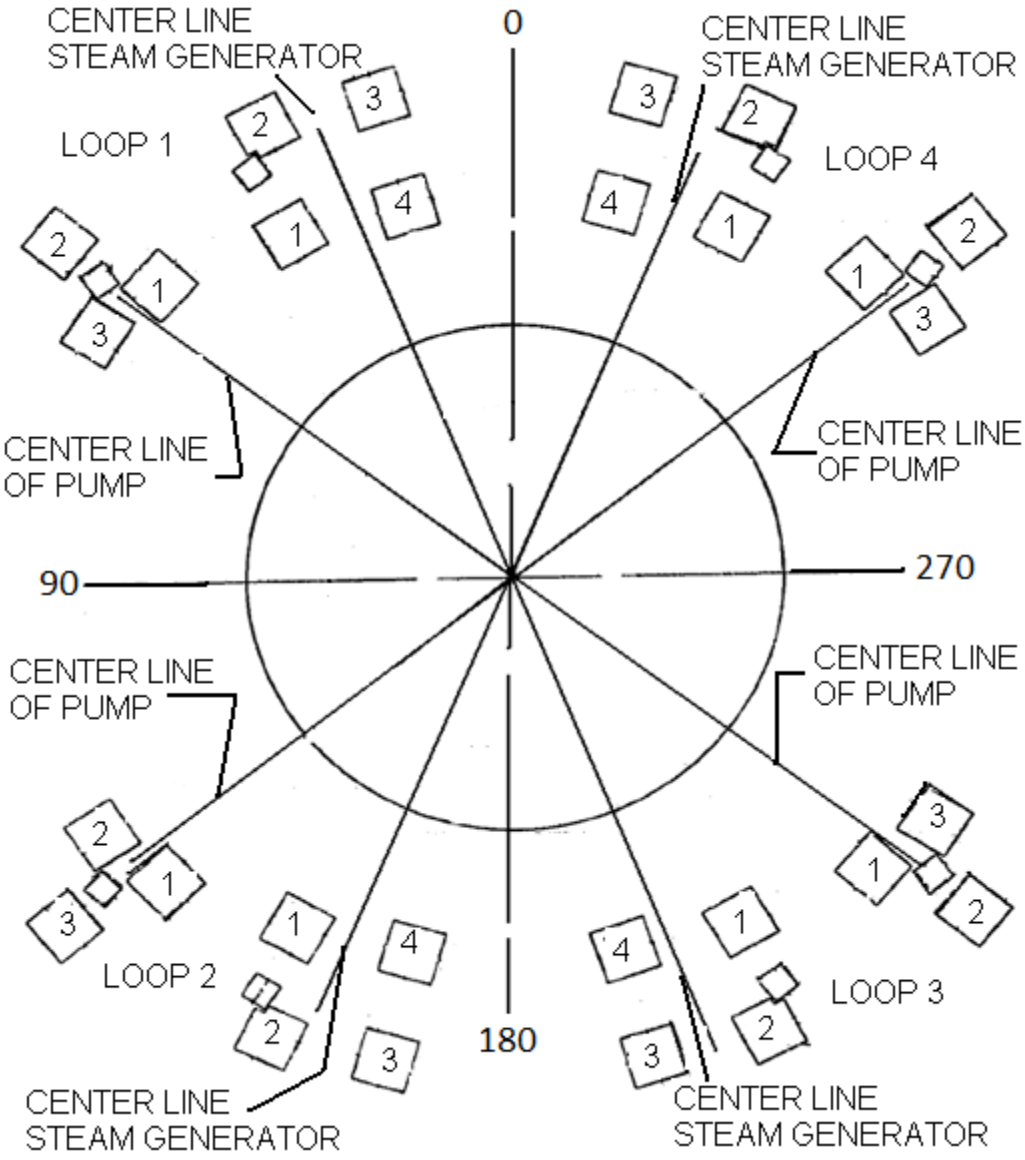

Attachment 15
(Page 28 of 35)

REACTOR COOLANT SYSTEM COMPONENT SUPPORT HOT FUNCTIONAL TEST 450° (445°-455°) TEMPERATURE DATA READINGS

Date _____

REACTOR COOLANT PUMP COLUMN DATA SHEET

RCP IDENTIFICATION RCP-1
DATE: _____
TIME: _____
INITIALS: _____
SYSTEM TEMP: _____

GAP NO.		COLUMNS		
		1	2	3
FRONT OR BACK	1			
SIDE	2			

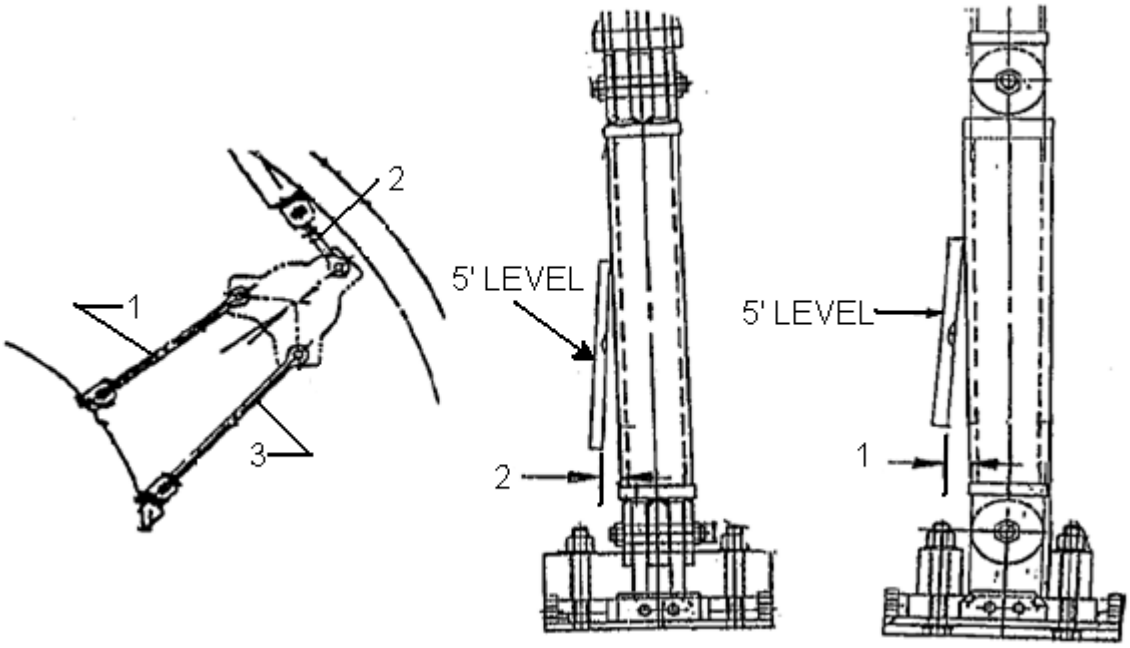

Attachment 15
(Page 29 of 35)

REACTOR COOLANT SYSTEM COMPONENT SUPPORT HOT FUNCTIONAL TEST 450° (445°-455°) TEMPERATURE DATA READINGS

Date _____

REACTOR COOLANT PUMP COLUMN DATA SHEET

RCP IDENTIFICATION RCP-2
DATE: _____
TIME: _____
INITIALS: _____
SYSTEM TEMP: _____

GAP NO.		COLUMNS		
		1	2	3
FRONT OR BACK	1			
SIDE	2			

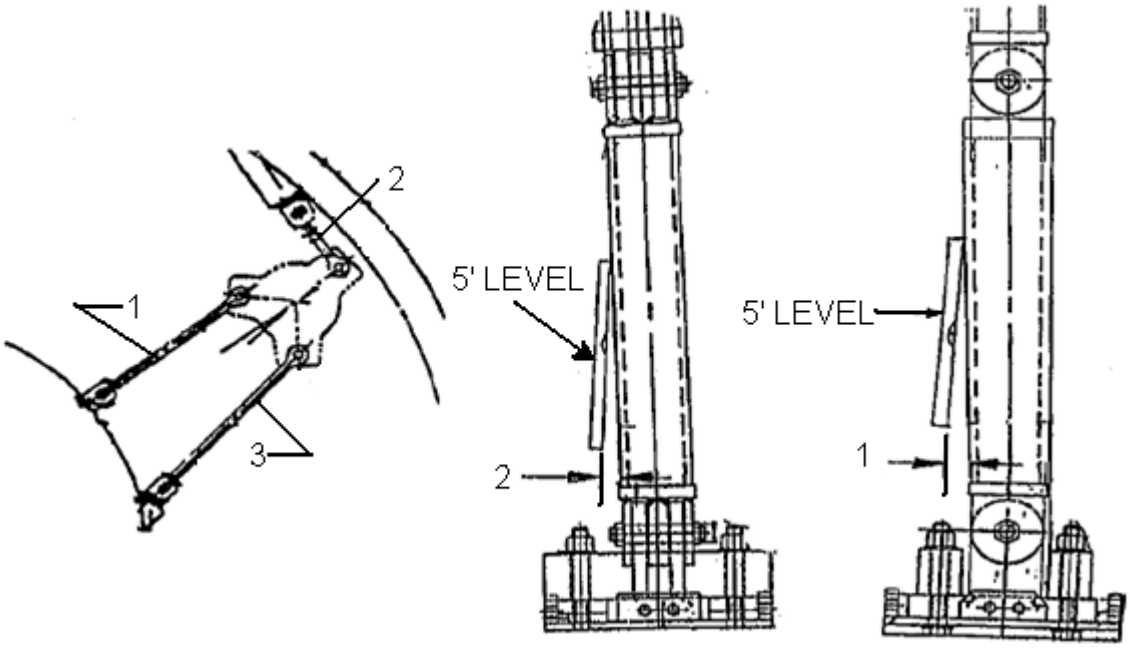

Attachment 15
(Page 30 of 35)

REACTOR COOLANT SYSTEM COMPONENT SUPPORT HOT FUNCTIONAL TEST 450° (445°-455°) TEMPERATURE DATA READINGS

Date _____

REACTOR COOLANT PUMP COLUMN DATA SHEET

RCP IDENTIFICATION RCP-3
DATE: _____
TIME: _____
INITIALS: _____
SYSTEM TEMP: _____

GAP NO.		COLUMNS		
		1	2	3
FRONT OR BACK	1			
SIDE	2			

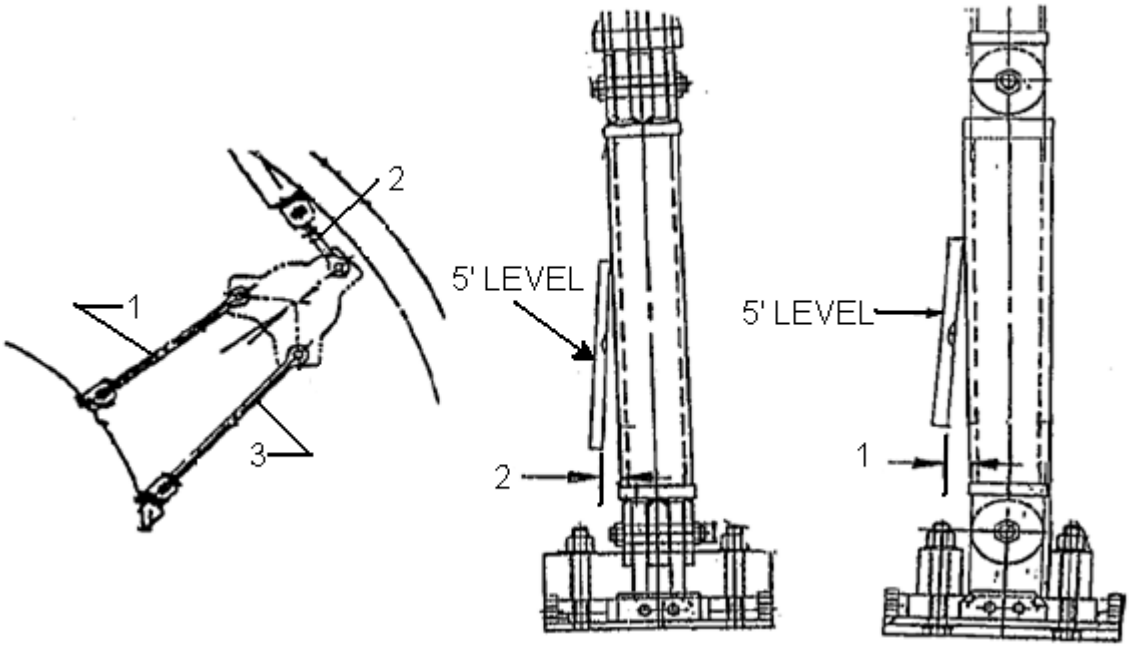

Attachment 15
(Page 31 of 35)

REACTOR COOLANT SYSTEM COMPONENT SUPPORT HOT FUNCTIONAL TEST 450° (445°-455°) TEMPERATURE DATA READINGS

Date _____

REACTOR COOLANT PUMP COLUMN DATA SHEET

RCP IDENTIFICATION RCP-4
DATE: _____
TIME: _____
INITIALS: _____
SYSTEM TEMP: _____

GAP NO.		COLUMNS		
		1	2	3
FRONT OR BACK	1			
SIDE	2			

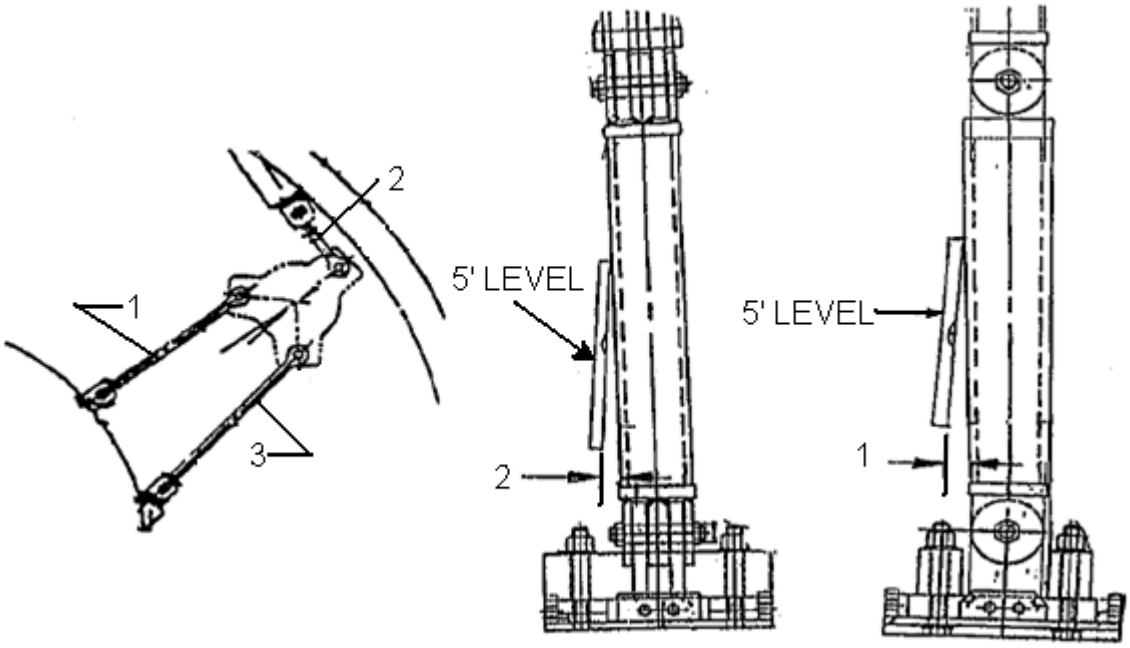

Attachment 15
(Page 32 of 35)

REACTOR COOLANT SYSTEM COMPONENT SUPPORT HOT FUNCTIONAL TEST 450° (445°-455°) TEMPERATURE DATA READINGS

Date _____

STEAM GENERATOR COLUMN DATA SHEET

SG IDENTIFICATION SG-1
DATE: _____
TIME: _____
INITIALS: _____
SYSTEM TEMP: _____

GAP NO.		COLUMNS			
		1	2	3	4
FRONT OR BACK	1				
SIDE	2				

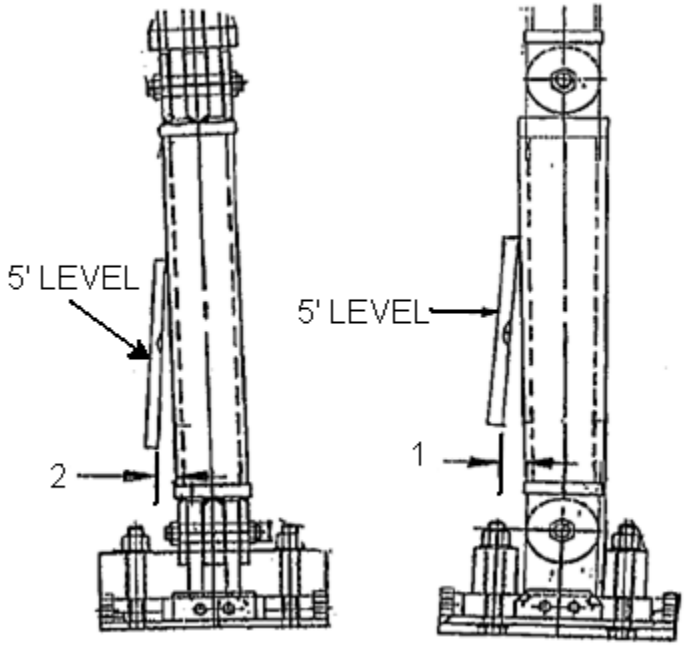

Attachment 15
(Page 33 of 35)

REACTOR COOLANT SYSTEM COMPONENT SUPPORT HOT FUNCTIONAL TEST 450° (445°-455°) TEMPERATURE DATA READINGS

Date _____

STEAM GENERATOR COLUMN DATA SHEET

SG IDENTIFICATION SG-2
DATE: _____
TIME: _____
INITIALS: _____
SYSTEM TEMP: _____

GAP NO.		COLUMNS			
		1	2	3	4
FRONT OR BACK	1				
SIDE	2				

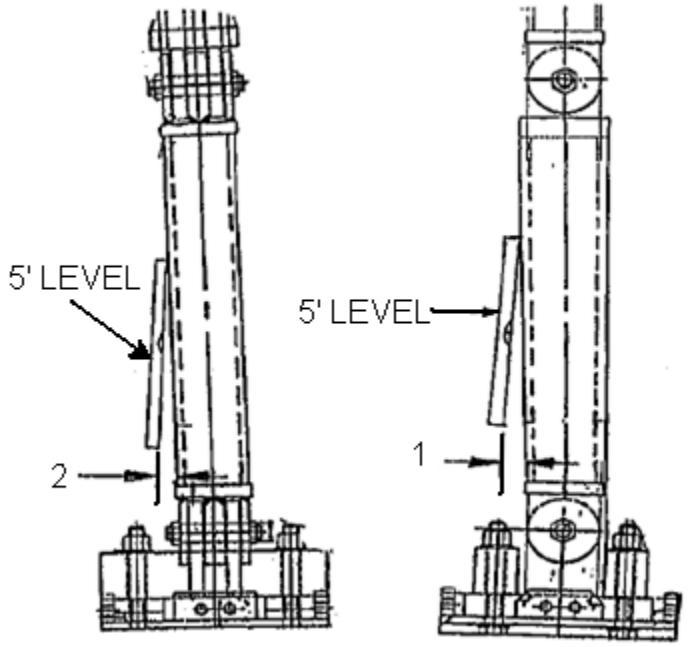

Attachment 15
(Page 34 of 35)

REACTOR COOLANT SYSTEM COMPONENT SUPPORT HOT FUNCTIONAL TEST 450° (445°-455°) TEMPERATURE DATA READINGS

Date _____

STEAM GENERATOR COLUMN DATA SHEET

SG IDENTIFICATION SG-3
DATE: _____
TIME: _____
INITIALS: _____
SYSTEM TEMP: _____

GAP NO.		COLUMNS			
		1	2	3	4
FRONT OR BACK	1				
SIDE	2				

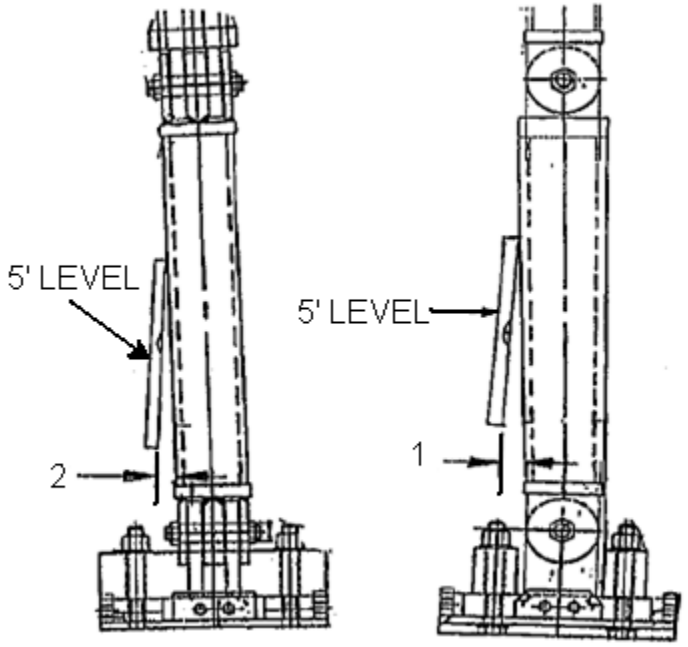

Attachment 15
(Page 35 of 35)

REACTOR COOLANT SYSTEM COMPONENT SUPPORT HOT FUNCTIONAL TEST 450° (445°-455°) TEMPERATURE DATA READINGS

Date _____

STEAM GENERATOR COLUMN DATA SHEET

SG IDENTIFICATION SG-4
DATE: _____
TIME: _____
INITIALS: _____
SYSTEM TEMP: _____

GAP NO.		COLUMNS			
		1	2	3	4
FRONT OR BACK	1				
SIDE	2				

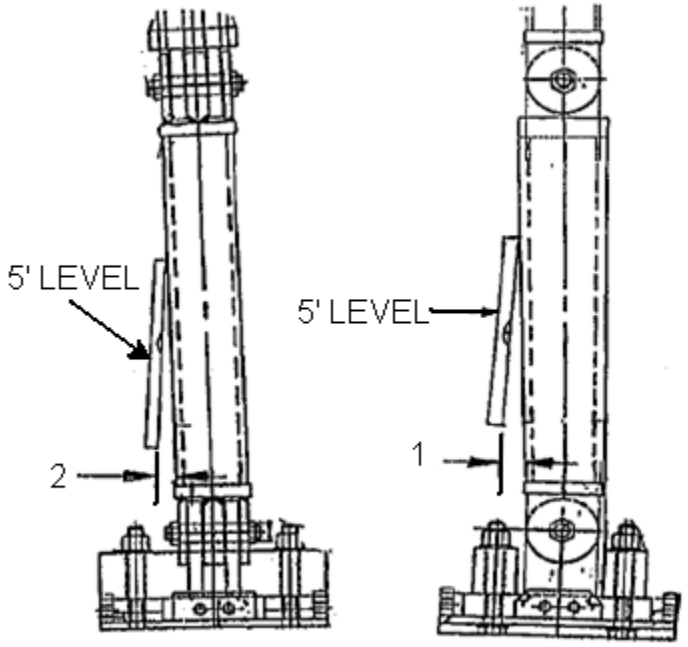

Attachment 16
(Page 1 of 35)

REACTOR COOLANT SYSTEM COMPONENT SUPPORT HOT FUNCTIONAL TEST 557° (553°-560°) TEMPERATURE DATA READINGS

Date _____

STEAM GENERATOR UPPER SUPPORT LAYOUT DETAIL

NOTE: Ring girder bolts, specifically at the splices plates in all quadrants, should be checked for broken, cracked or loose bolts. Record the defects/deficiencies found using the Test Deficiency Notice and place in Attachment 33, after disposition.

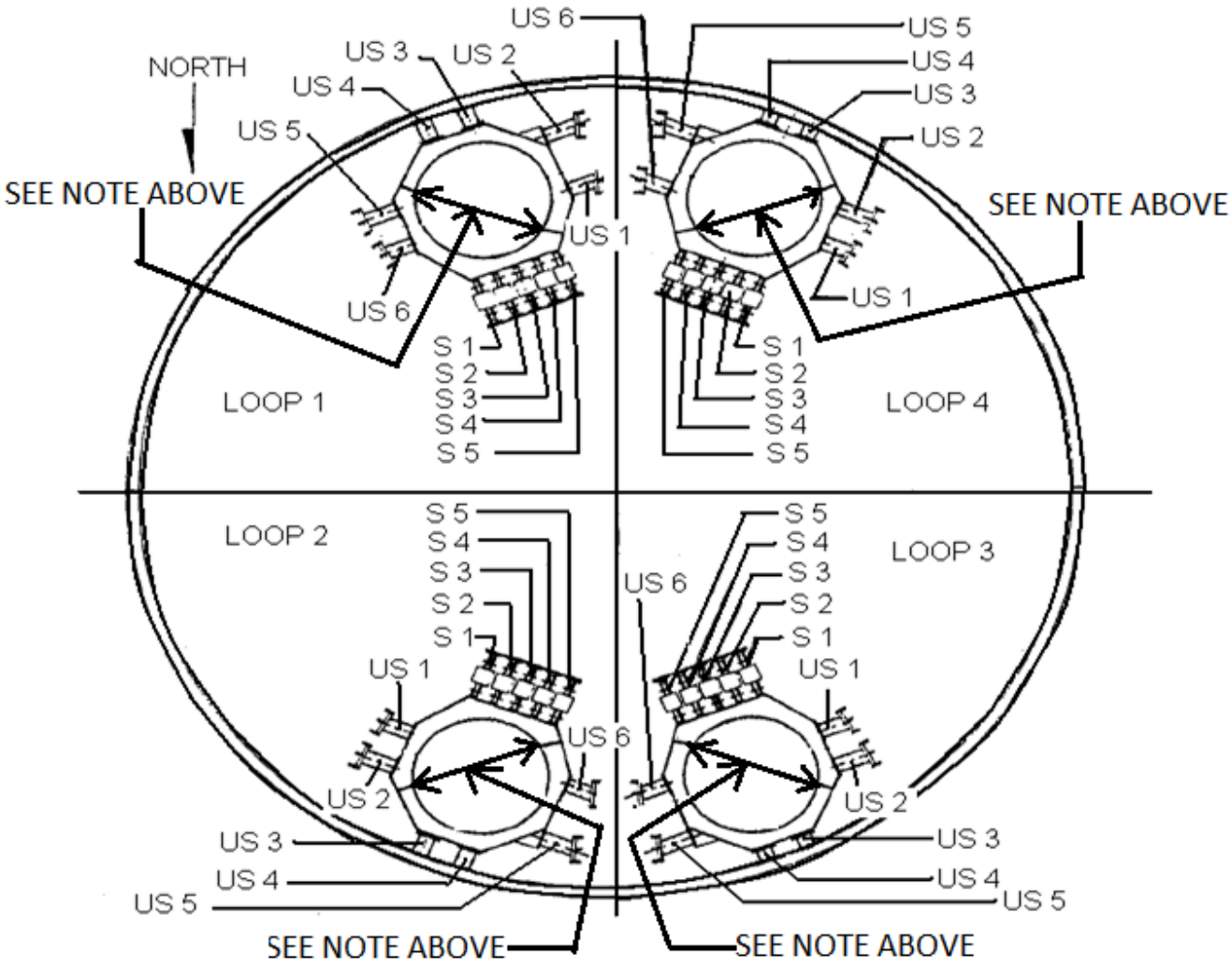

STEAM GENERATOR UPPER SUPPORT DYNAMIC SNUBBERS DATA SHEET

Attachment 16
(Page 2 of 35)

REACTOR COOLANT SYSTEM COMPONENT SUPPORT HOT FUNCTIONAL TEST 557° (553°-560°) TEMPERATURE DATA READINGS

Date _____

SG IDENTIFICATION SG-1
INITIALS: _____
SYSTEM TEMP: _____

ROD MEASUREMENT "A"

DATE	TIME	DYNAMIC SNUBBERS IDENTIFICATION				
		S-1	S-2	S-3	S-4	S-5

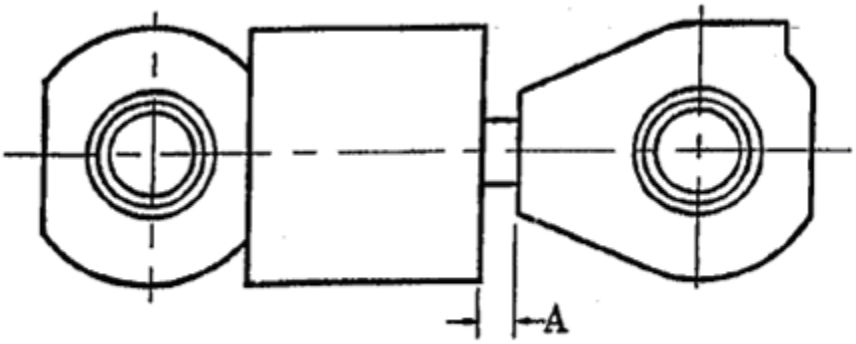

Attachment 16
(Page 3 of 35)

REACTOR COOLANT SYSTEM COMPONENT SUPPORT HOT FUNCTIONAL TEST 557° (553°-560°) TEMPERATURE DATA READINGS

Date _____

STEAM GENERATOR UPPER SUPPORT DYNAMIC SNUBBERS DATA SHEET

SG IDENTIFICATION SG-2
INITIALS: _____
SYSTEM TEMP: _____

ROD MEASUREMENT "A"

DATE	TIME	DYNAMIC SNUBBERS IDENTIFICATION				
		S-1	S-2	S-3	S-4	S-5

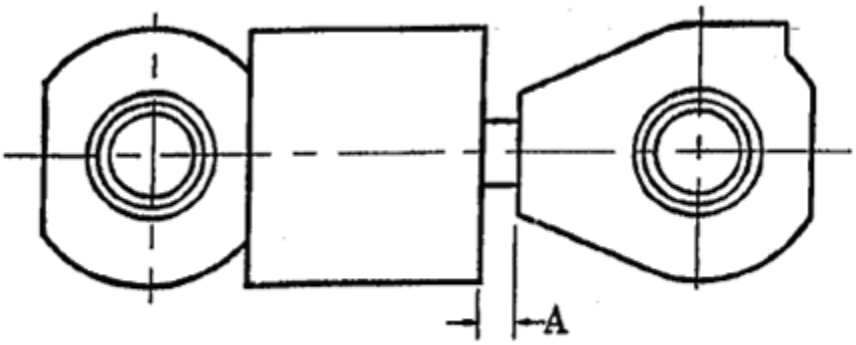

Attachment 16
(Page 4 of 35)

REACTOR COOLANT SYSTEM COMPONENT SUPPORT HOT FUNCTIONAL TEST 557° (553°-560°) TEMPERATURE DATA READINGS

Date _____

STEAM GENERATOR UPPER SUPPORT DYNAMIC SNUBBERS DATA SHEET

SG IDENTIFICATION SG-3
INITIALS: _____
SYSTEM TEMP: _____

ROD MEASUREMENT "A"

DATE	TIME	DYNAMIC SNUBBERS IDENTIFICATION				
		S-1	S-2	S-3	S-4	S-5

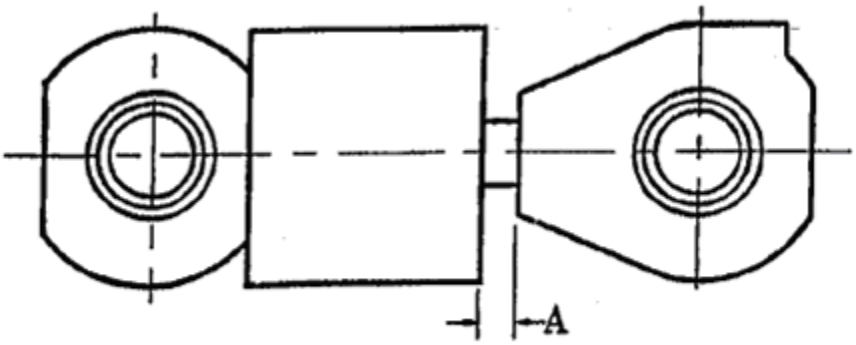

Attachment 16
(Page 5 of 35)

REACTOR COOLANT SYSTEM COMPONENT SUPPORT HOT FUNCTIONAL TEST 557° (553°-560°) TEMPERATURE DATA READINGS

Date _____

STEAM GENERATOR UPPER SUPPORT DYNAMIC SNUBBERS DATA SHEET

SG IDENTIFICATION SG-4
INITIALS: _____
SYSTEM TEMP: _____

ROD MEASUREMENT "A"

DATE	TIME	DYNAMIC SNUBBERS IDENTIFICATION				
		S-1	S-2	S-3	S-4	S-5

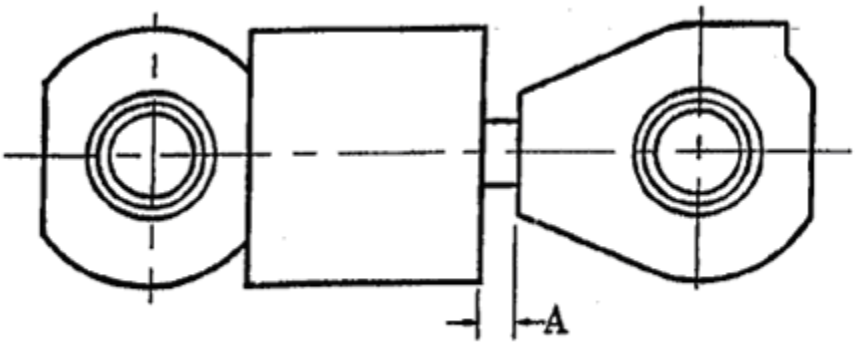

Attachment 16
(Page 6 of 35)

REACTOR COOLANT SYSTEM COMPONENT SUPPORT HOT FUNCTIONAL TEST 557° (553°-560°) TEMPERATURE DATA READINGS

Date _____

STEAM GENERATOR UPPER SUPPORT DATA SHEET

SG IDENTIFICATION SG-1
DATE: _____
TIME: _____
INITIALS: _____
SYSTEM TEMP: _____

GAP MEASUREMENTS

GAP NO.	BUMPER IDENTIFICATION					
	US-1	US-2	US-3	US-4	US-5	US-6
1						
2						
3						
4						

NOTE

Visual inspection only for US-1, US-2, US-5 and US-6. Record as “SAT” (Satisfactory) or “UNSAT” (Unsatisfactory for gap 1. If “UNSAT” is recorded, give brief description of condition in box provided (gaps 2, 3, and 4).

Gaps 3 and 4 are below 1 and 2 respectively for US-3 and US-4.

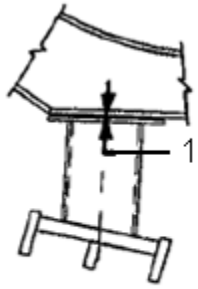

US-1 & US-2

US-5 & US-6

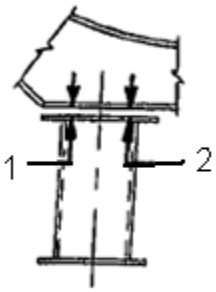

US-3 & US-4

Attachment 16
(Page 7 of 35)

REACTOR COOLANT SYSTEM COMPONENT SUPPORT HOT FUNCTIONAL TEST 557° (553°-560°) TEMPERATURE DATA READINGS

Date _____

STEAM GENERATOR UPPER SUPPORT DATA SHEET

SG IDENTIFICATION SG-2
DATE: _____
TIME: _____
INITIALS: _____
SYSTEM TEMP: _____

GAP MEASUREMENTS

GAP NO.	BUMPER IDENTIFICATION					
	US-1	US-2	US-3	US-4	US-5	US-6
1						
2						
3						
4						

NOTE

Visual inspection only for US-1, US-2, US-5 and US-6. Record as “SAT” (Satisfactory) or “UNSAT” (Unsatisfactory for gap 1. If “UNSAT” is recorded, give brief description of condition in box provided (gaps 2, 3, and 4).

Gaps 3 and 4 are below 1 and 2 respectively for US-3 and US-4.

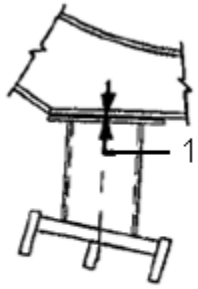

US-1 & US-2

US-5 & US-6

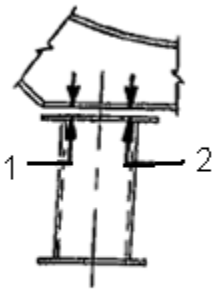

US-3 & US-4

Attachment 16
(Page 8 of 35)

REACTOR COOLANT SYSTEM COMPONENT SUPPORT HOT FUNCTIONAL TEST 557° (553°-560°) TEMPERATURE DATA READINGS

Date _____

STEAM GENERATOR UPPER SUPPORT DATA SHEET

SG IDENTIFICATION SG-3
DATE: _____
TIME: _____
INITIALS: _____
SYSTEM TEMP: _____

GAP MEASUREMENTS

GAP NO.	BUMPER IDENTIFICATION					
	US-1	US-2	US-3	US-4	US-5	US-6
1						
2						
3						
4						

NOTE

Visual inspection only for US-1, US-2, US-5 and US-6. Record as “SAT” (Satisfactory) or “UNSAT” (Unsatisfactory for gap 1. If “UNSAT” is recorded, give brief description of condition in box provided (gaps 2, 3, and 4).

Gaps 3 and 4 are below 1 and 2 respectively for US-3 and US-4.

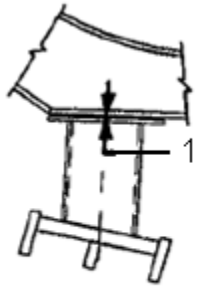

US-1 & US-2

US-5 & US-6

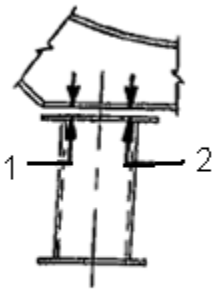

US-3 & US-4

Attachment 16
(Page 9 of 35)

REACTOR COOLANT SYSTEM COMPONENT SUPPORT HOT FUNCTIONAL TEST 557° (553°-560°) TEMPERATURE DATA READINGS

Date _____

STEAM GENERATOR UPPER SUPPORT DATA SHEET

SG IDENTIFICATION SG-4
DATE: _____
TIME: _____
INITIALS: _____
SYSTEM TEMP: _____

GAP MEASUREMENTS

GAP NO.	BUMPER IDENTIFICATION					
	US-1	US-2	US-3	US-4	US-5	US-6
1						
2						
3						
4						

NOTE

Visual inspection only for US-1, US-2, US-5 and US-6. Record as “SAT” (Satisfactory) or “UNSAT” (Unsatisfactory for gap 1. If “UNSAT” is recorded, give brief description of condition in box provided (gaps 2, 3, and 4).

Gaps 3 and 4 are below 1 and 2 respectively for US-3 and US-4.

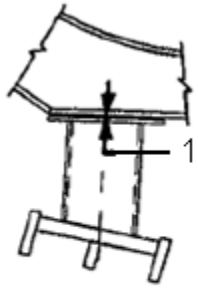

US-1 & US-2

US-5 & US-6

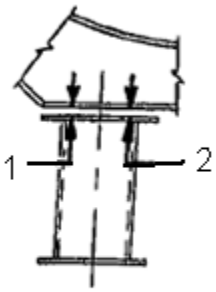

US-3 & US-4

Attachment 16
(Page 10 of 35)

REACTOR COOLANT SYSTEM COMPONENT SUPPORT HOT FUNCTIONAL TEST 557° (553°-560°) TEMPERATURE DATA READINGS

Date _____

STEAM GENERATOR LOWER SUPPORT LAYOUT DETAILS

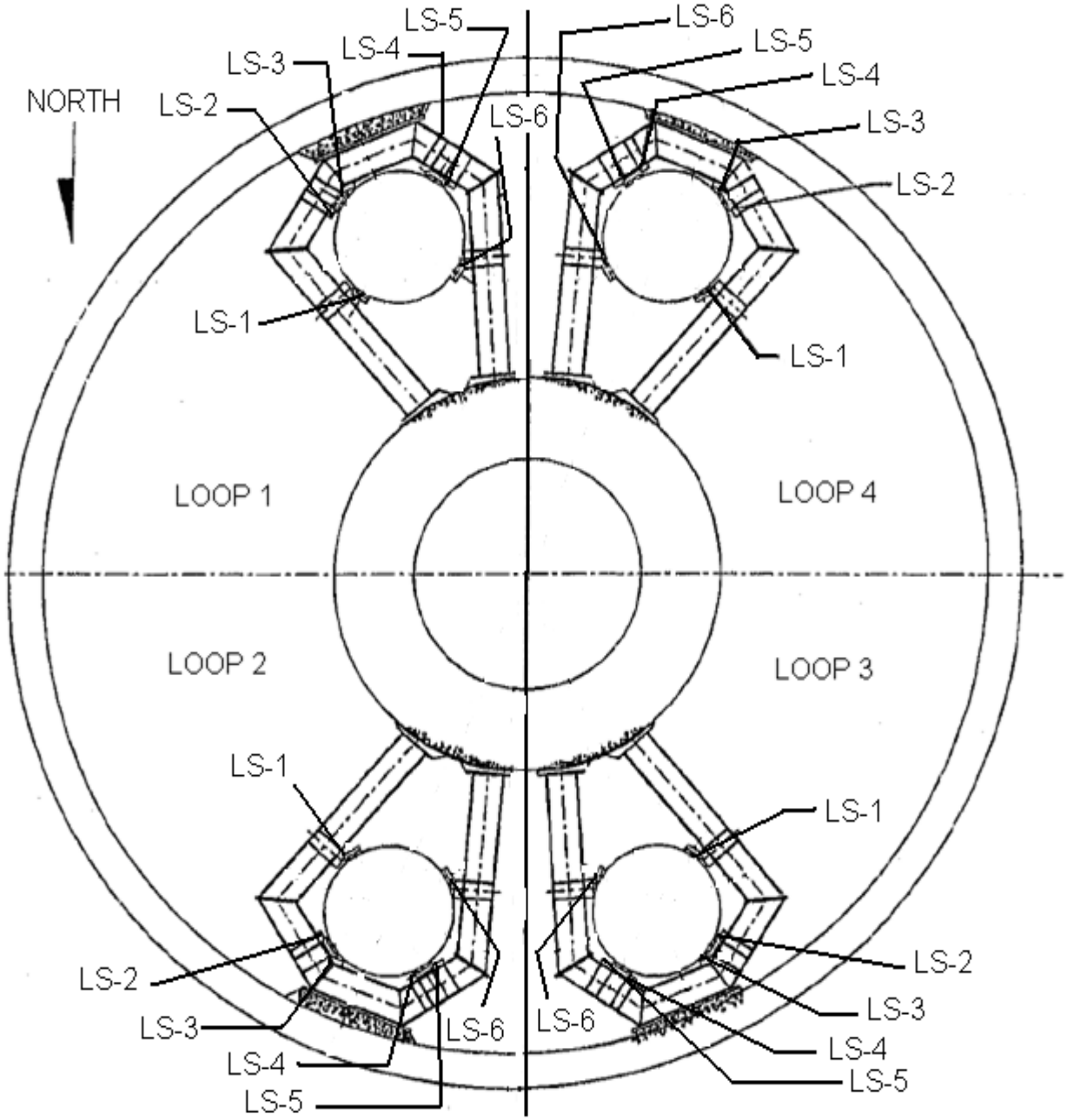

Attachment 16
(Page 11 of 35)

REACTOR COOLANT SYSTEM COMPONENT SUPPORT HOT FUNCTIONAL TEST 557° (553°-560°) TEMPERATURE DATA READINGS

Date _____

STEAM GENERATOR LOWER SUPPORT DATA SHEET

SG IDENTIFICATION SG-1
DATE: _____
TIME: _____
INITIALS: _____
SYSTEM TEMP: _____

GAP MEASUREMENTS

GAP NO.	BUMPER IDENTIFICATION					
	LS-1	LS-2	LS-3	LS-4	LS-5	LS-6
1						
2						
3						
4						

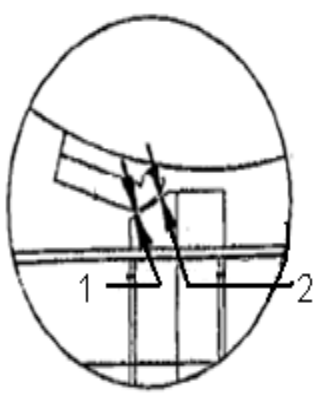

LS-1

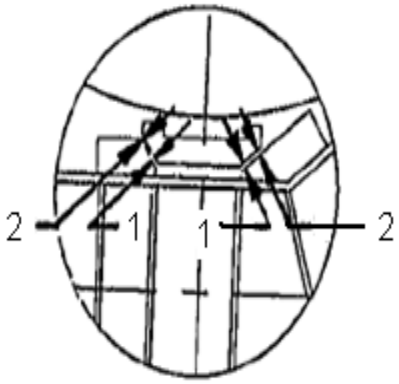

LS-2 & LS-3

LS-4 & LS-5

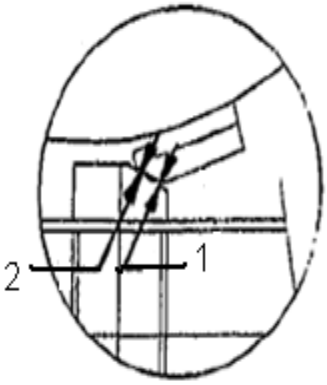

LS-6

Attachment 16
(Page 12 of 35)

REACTOR COOLANT SYSTEM COMPONENT SUPPORT HOT FUNCTIONAL TEST 557° (553°-560°) TEMPERATURE DATA READINGS

Date _____

STEAM GENERATOR LOWER SUPPORT DATA SHEET

SG IDENTIFICATION SG-2
DATE: _____
TIME: _____
INITIALS: _____
SYSTEM TEMP: _____

GAP MEASUREMENTS

GAP NO.	BUMPER IDENTIFICATION					
	LS-1	LS-2	LS-3	LS-4	LS-5	LS-6
1						
2						
3						
4						

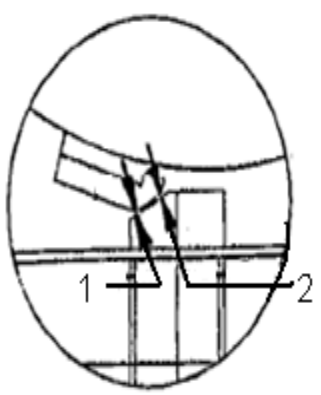

LS-1

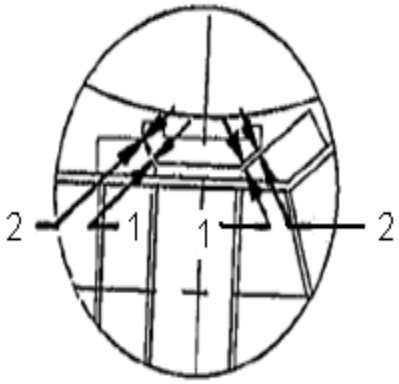

LS-2 & LS-3

LS-4 & LS-5

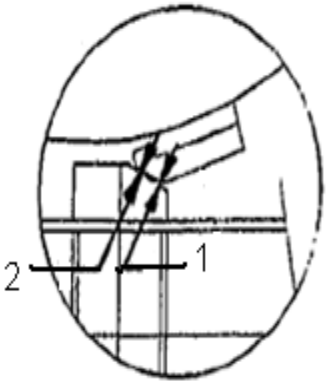

LS-6

Attachment 16
(Page 13 of 35)

REACTOR COOLANT SYSTEM COMPONENT SUPPORT HOT FUNCTIONAL TEST 557° (553°-560°) TEMPERATURE DATA READINGS

Date _____

STEAM GENERATOR LOWER SUPPORT DATA SHEET

SG IDENTIFICATION SG-3
DATE: _____
TIME: _____
INITIALS: _____
SYSTEM TEMP: _____

GAP MEASUREMENTS

GAP NO.	BUMPER IDENTIFICATION					
	LS-1	LS-2	LS-3	LS-4	LS-5	LS-6
1						
2						
3						
4						

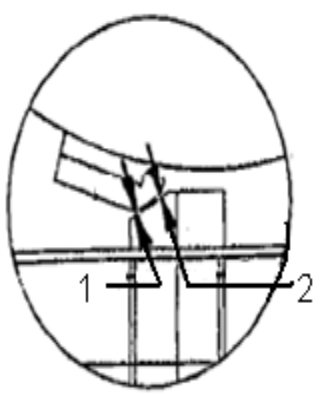

LS-1

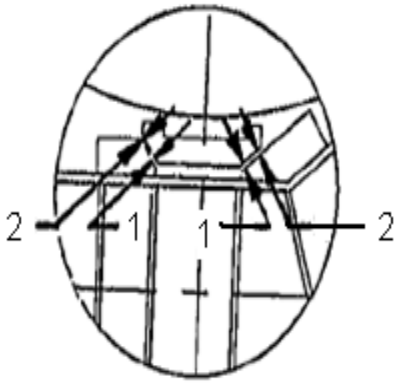

LS-2 & LS-3

LS-4 & LS-5

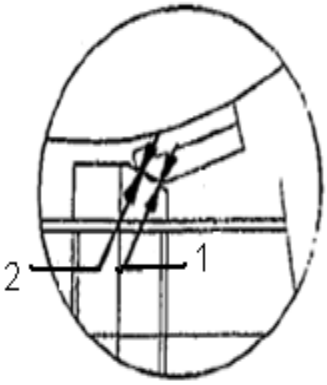

LS-6

Attachment 16
(Page 14 of 35)

REACTOR COOLANT SYSTEM COMPONENT SUPPORT HOT FUNCTIONAL TEST 557° (553°-560°) TEMPERATURE DATA READINGS

Date _____

STEAM GENERATOR LOWER SUPPORT DATA SHEET

SG IDENTIFICATION SG-4
DATE: _____
TIME: _____
INITIALS: _____
SYSTEM TEMP: _____

GAP MEASUREMENTS

GAP NO.	BUMPER IDENTIFICATION					
	LS-1	LS-2	LS-3	LS-4	LS-5	LS-6
1						
2						
3						
4						

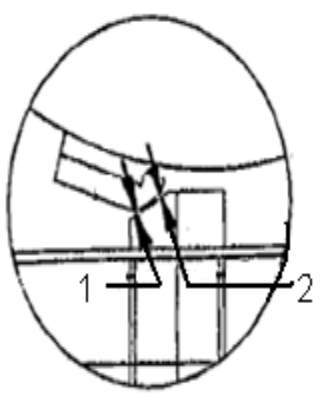

LS-1

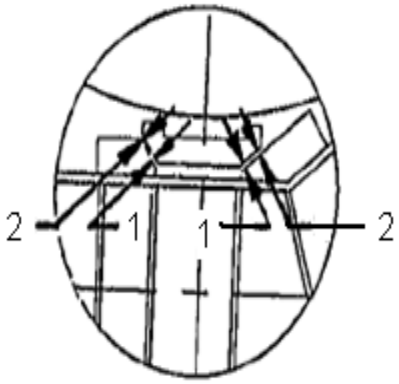

LS-2 & LS-3

LS-4 & LS-5

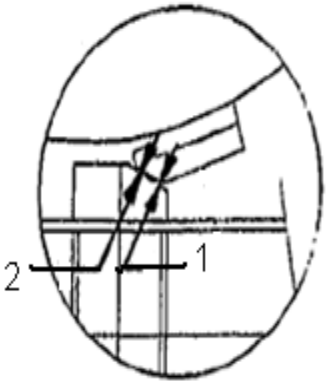

LS-6

Attachment 16
(Page 15 of 35)

REACTOR COOLANT SYSTEM COMPONENT SUPPORT HOT FUNCTIONAL TEST 557° (553°-560°) TEMPERATURE DATA READINGS

Date _____

REACTOR COOLANT PUMP TIE ROD LAYOUT DETAILS

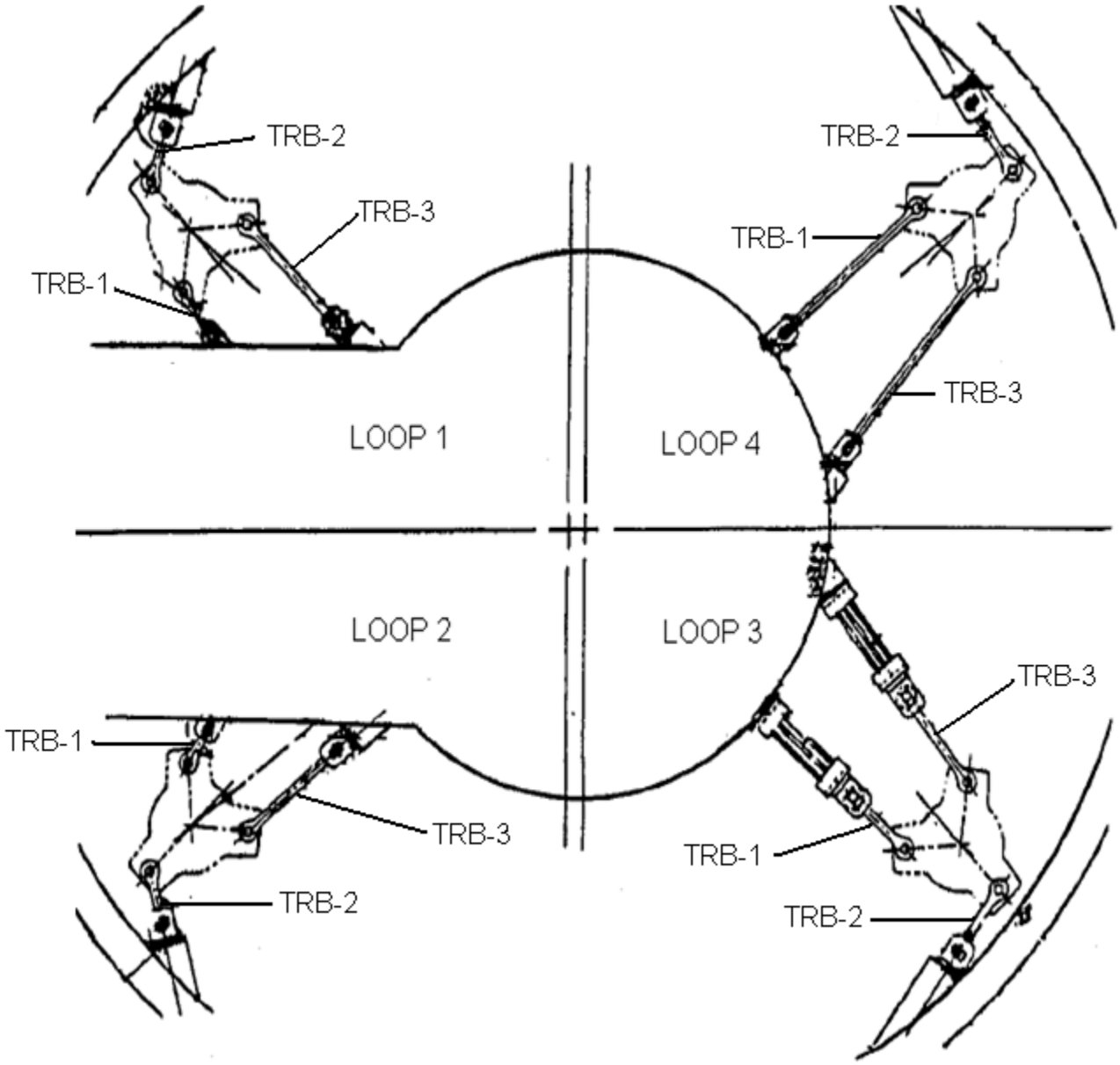

Attachment 16
(Page 16 of 35)

REACTOR COOLANT SYSTEM COMPONENT SUPPORT HOT FUNCTIONAL TEST 557° (553°-560°) TEMPERATURE DATA READINGS

Date _____

REACTOR COOLANT PUMP TIE ROD DATA SHEET

RCP IDENTIFICATION RCP-1
DATE: _____
TIME: _____
INITIALS: _____
SYSTEM TEMP: _____

GAP MEASUREMENTS

GAP NO.		TIE ROD BRACKET IDENTIFICATION		
		TRB-1 (INSIDE)	TRB-2 (BACK)	TRB-3 (OUTSIDE)
TOP	1F			
	1B			
BOT	2F			
	2B			

NOTE

"F" is the front side (shimmed side) of the pin.

"B" is the back side (un-shimmed side) of the pin.

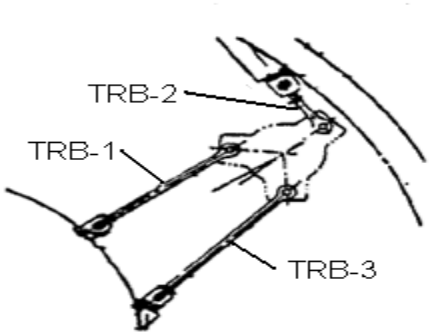

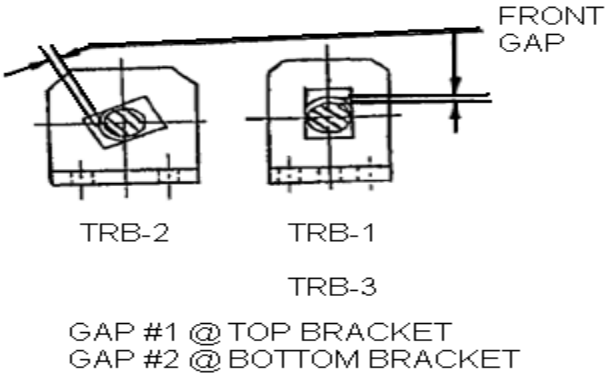

Attachment 16
(Page 17 of 35)

REACTOR COOLANT SYSTEM COMPONENT SUPPORT HOT FUNCTIONAL TEST 557° (553°-560°) TEMPERATURE DATA READINGS

Date _____

REACTOR COOLANT PUMP TIE ROD DATA SHEET

RCP IDENTIFICATION RCP-2
DATE: _____
TIME: _____
INITIALS: _____
SYSTEM TEMP: _____

GAP MEASUREMENTS

GAP NO.		TIE ROD BRACKET IDENTIFICATION		
		TRB-1 (INSIDE)	TRB-2 (BACK)	TRB-3 (OUTSIDE)
TOP	1F			
	1B			
BOT	2F			
	2B			

NOTE

"F" is the front side (shimmed side) of the pin.

"B" is the back side (un-shimmed side) of the pin.

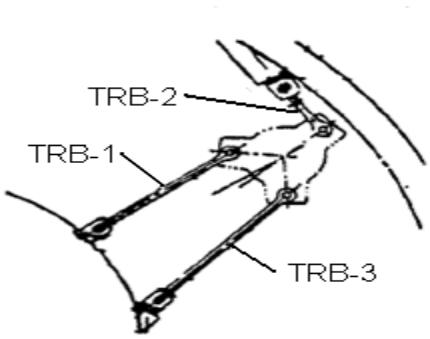

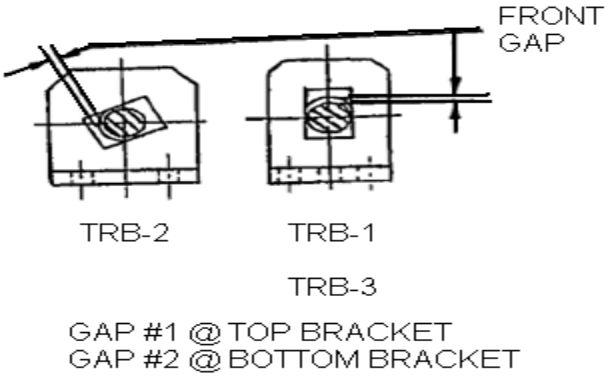

Attachment 16
(Page 18 of 35)

REACTOR COOLANT SYSTEM COMPONENT SUPPORT HOT FUNCTIONAL TEST 557° (553°-560°) TEMPERATURE DATA READINGS

Date _____

REACTOR COOLANT PUMP TIE ROD DATA SHEET

RCP IDENTIFICATION RCP-3
DATE: _____
TIME: _____
INITIALS: _____
SYSTEM TEMP: _____

GAP MEASUREMENTS

GAP NO.		TIE ROD BRACKET IDENTIFICATION		
		TRB-1 (INSIDE)	TRB-2 (BACK)	TRB-3 (OUTSIDE)
TOP	1F			
	1B			
BOT	2F			
	2B			

NOTE

"F" is the front side (shimmed side) of the pin.

"B" is the back side (un-shimmed side) of the pin.

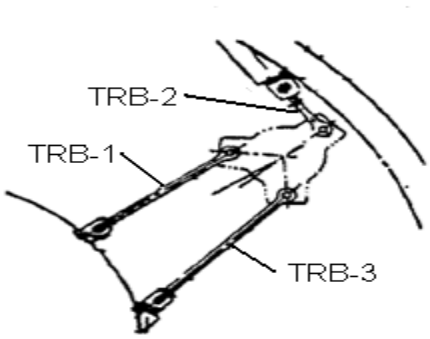

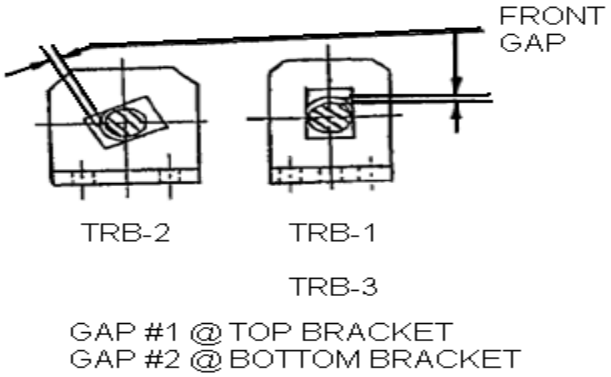

Attachment 16
(Page 19 of 35)

REACTOR COOLANT SYSTEM COMPONENT SUPPORT HOT FUNCTIONAL TEST 557° (553°-560°) TEMPERATURE DATA READINGS

Date _____

REACTOR COOLANT PUMP TIE ROD DATA SHEET

RCP IDENTIFICATION RCP-4
DATE: _____
TIME: _____
INITIALS: _____
SYSTEM TEMP: _____

GAP MEASUREMENTS

GAP NO.		TIE ROD BRACKET IDENTIFICATION		
		TRB-1 (INSIDE)	TRB-2 (BACK)	TRB-3 (OUTSIDE)
TOP	1F			
	1B			
BOT	2F			
	2B			

NOTE

"F" is the front side (shimmed side) of the pin.

"B" is the back side (un-shimmed side) of the pin.

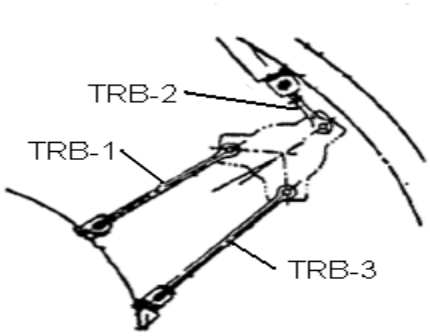

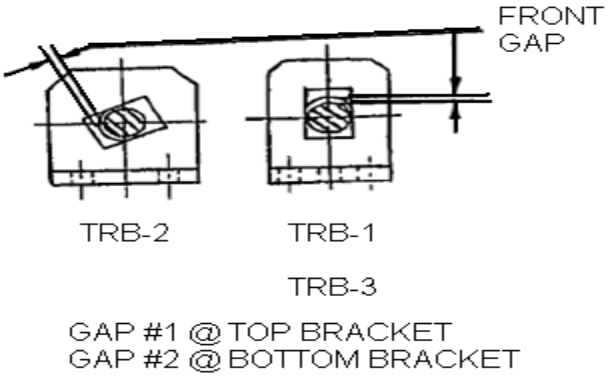

Attachment 16
(Page 20 of 35)

REACTOR COOLANT SYSTEM COMPONENT SUPPORT HOT FUNCTIONAL TEST 557° (553°-560°) TEMPERATURE DATA READINGS

Date _____

CROSS OVER LEG ELBOW SUPPORT LAYOUT DETAILS

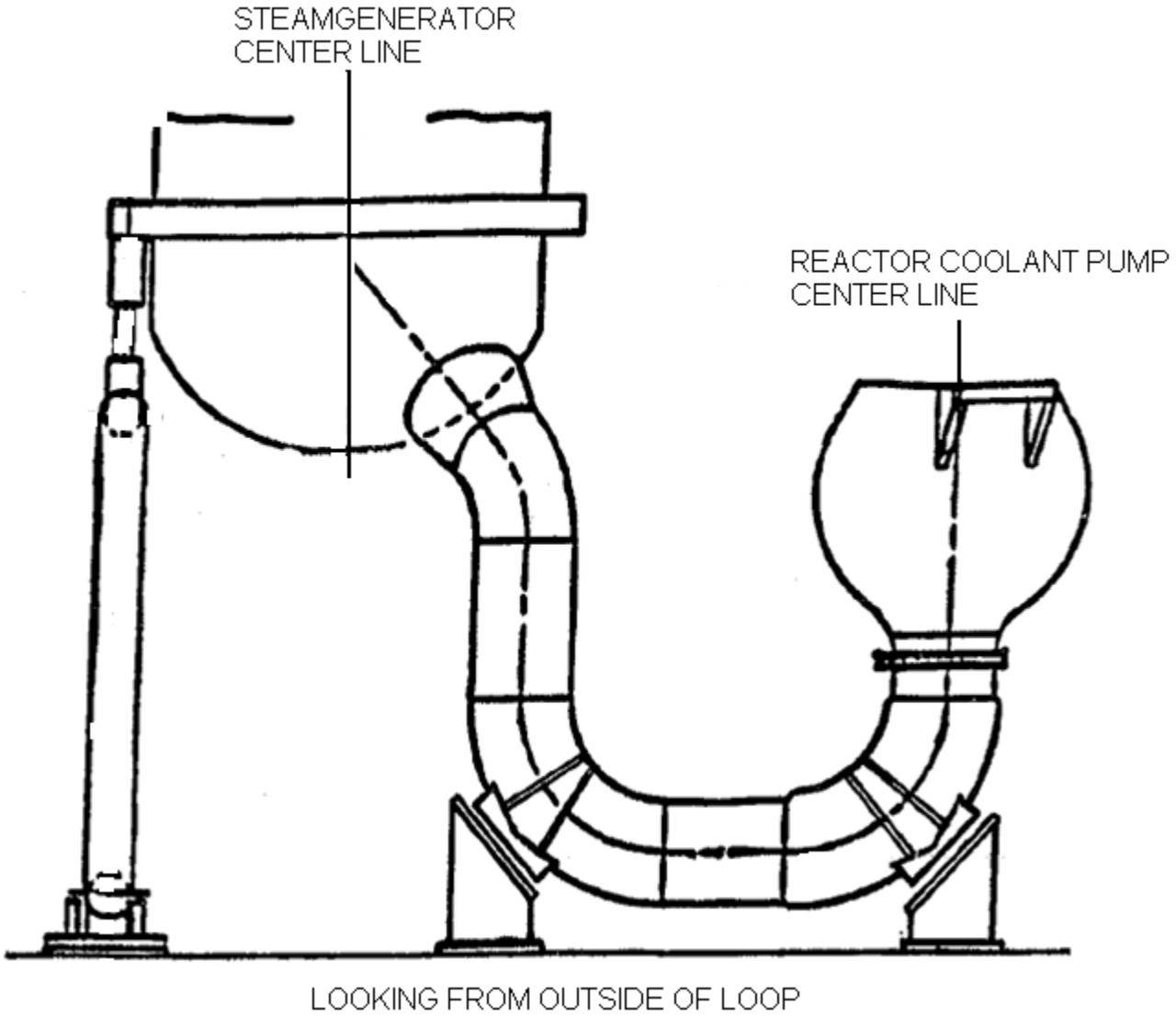

CROSS OVER LEG ELBOW SUPPORT DATA SHEET

Attachment 16
(Page 21 of 35)

REACTOR COOLANT SYSTEM COMPONENT SUPPORT HOT FUNCTIONAL TEST 557° (553°-560°) TEMPERATURE DATA READINGS

Date _____

LOOP IDENTIFICATION SG-1
DATE: _____
TIME: _____
INITIALS: _____
SYSTEM TEMP: _____

GAP MEASUREMENTS

SUPPORT	GAP 1	GAP 2	GAP 3	GAP 4
XLSG				
XLRCP				

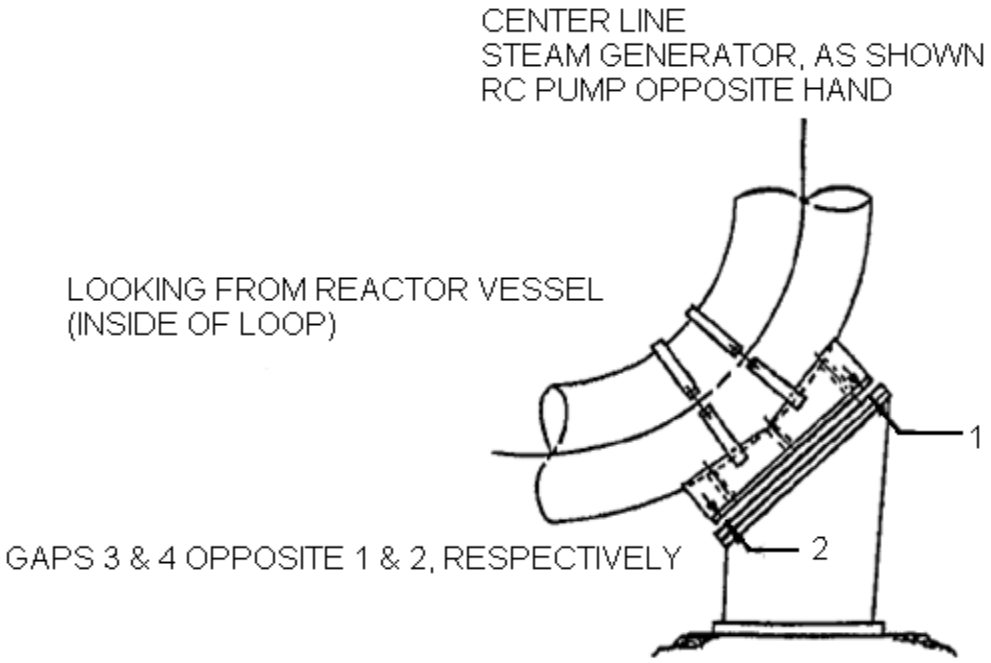

Attachment 16
(Page 22 of 35)

REACTOR COOLANT SYSTEM COMPONENT SUPPORT HOT FUNCTIONAL TEST 557° (553°-560°) TEMPERATURE DATA READINGS

Date _____

CROSS OVER LEG ELBOW SUPPORT DATA SHEET

LOOP IDENTIFICATION SG-2
DATE: _____
TIME: _____
INITIALS: _____
SYSTEM TEMP: _____

GAP MEASUREMENTS

SUPPORT	GAP 1	GAP 2	GAP 3	GAP 4
XLSG				
XLRCP				

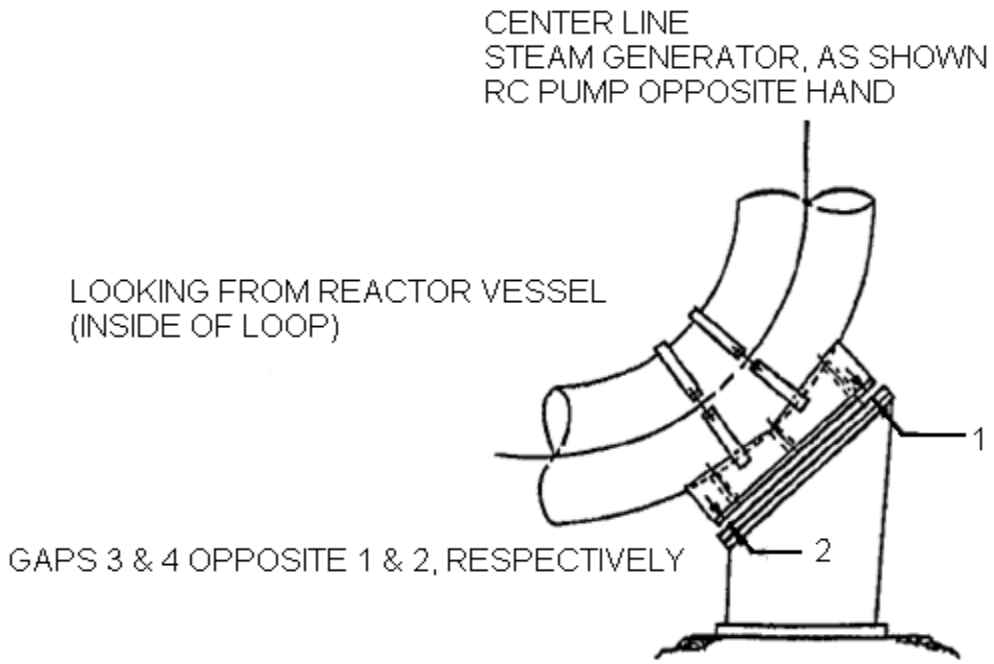

Attachment 16
(Page 23 of 35)

REACTOR COOLANT SYSTEM COMPONENT SUPPORT HOT FUNCTIONAL TEST 557° (553°-560°) TEMPERATURE DATA READINGS

Date _____

CROSS OVER LEG ELBOW SUPPORT DATA SHEET

LOOP IDENTIFICATION SG-3
DATE: _____
TIME: _____
INITIALS: _____
SYSTEM TEMP: _____

GAP MEASUREMENTS

SUPPORT	GAP 1	GAP 2	GAP 3	GAP 4
XLSG				
XLRCP				

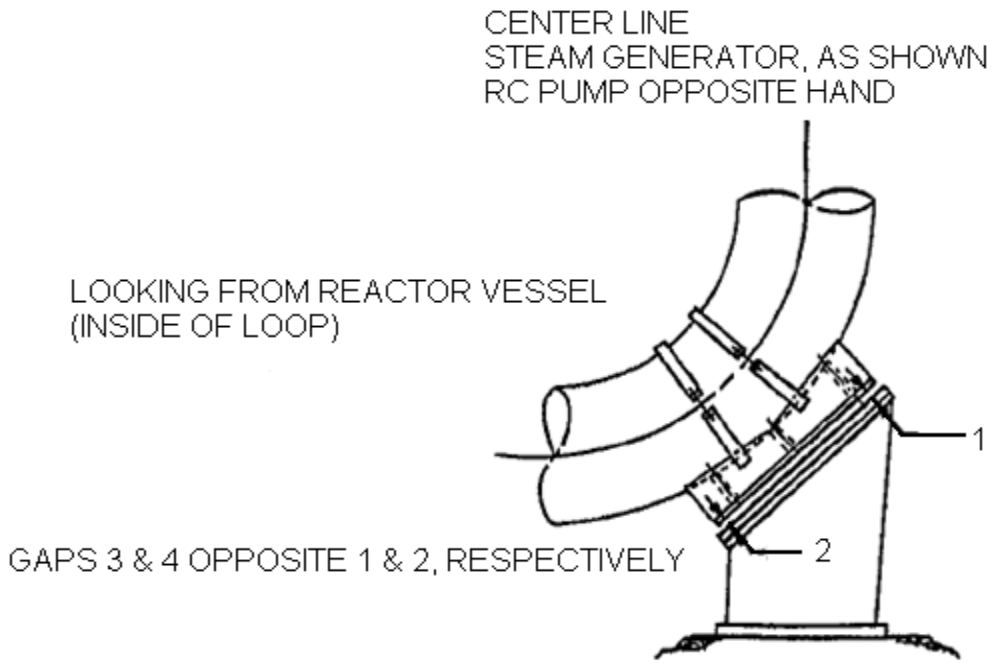

Attachment 16
(Page 24 of 35)

REACTOR COOLANT SYSTEM COMPONENT SUPPORT HOT FUNCTIONAL TEST 557° (553°-560°) TEMPERATURE DATA READINGS

Date _____

CROSS OVER LEG ELBOW SUPPORT DATA SHEET

LOOP IDENTIFICATION SG-4
DATE: _____
TIME: _____
INITIALS: _____
SYSTEM TEMP: _____

GAP MEASUREMENTS

SUPPORT	GAP 1	GAP 2	GAP 3	GAP 4
XLSG				
XLRCP				

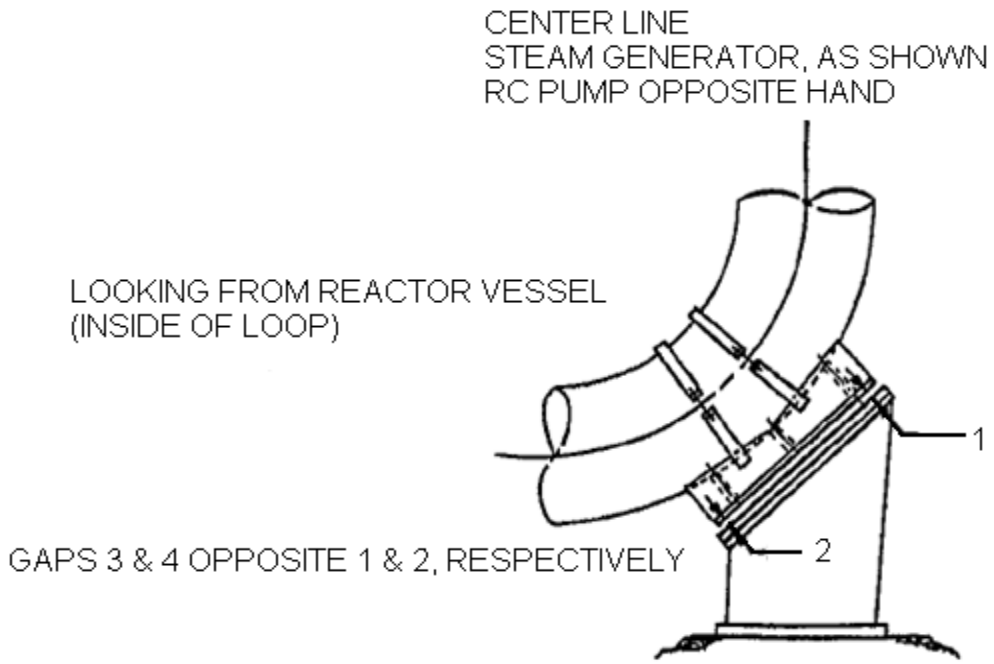

Attachment 16
(Page 25 of 35)

REACTOR COOLANT SYSTEM COMPONENT SUPPORT HOT FUNCTIONAL TEST 557° (553°-560°) TEMPERATURE DATA READINGS

Date _____

PRESSURIZER UPPER SUPPORTS LAYOUT DETAILS

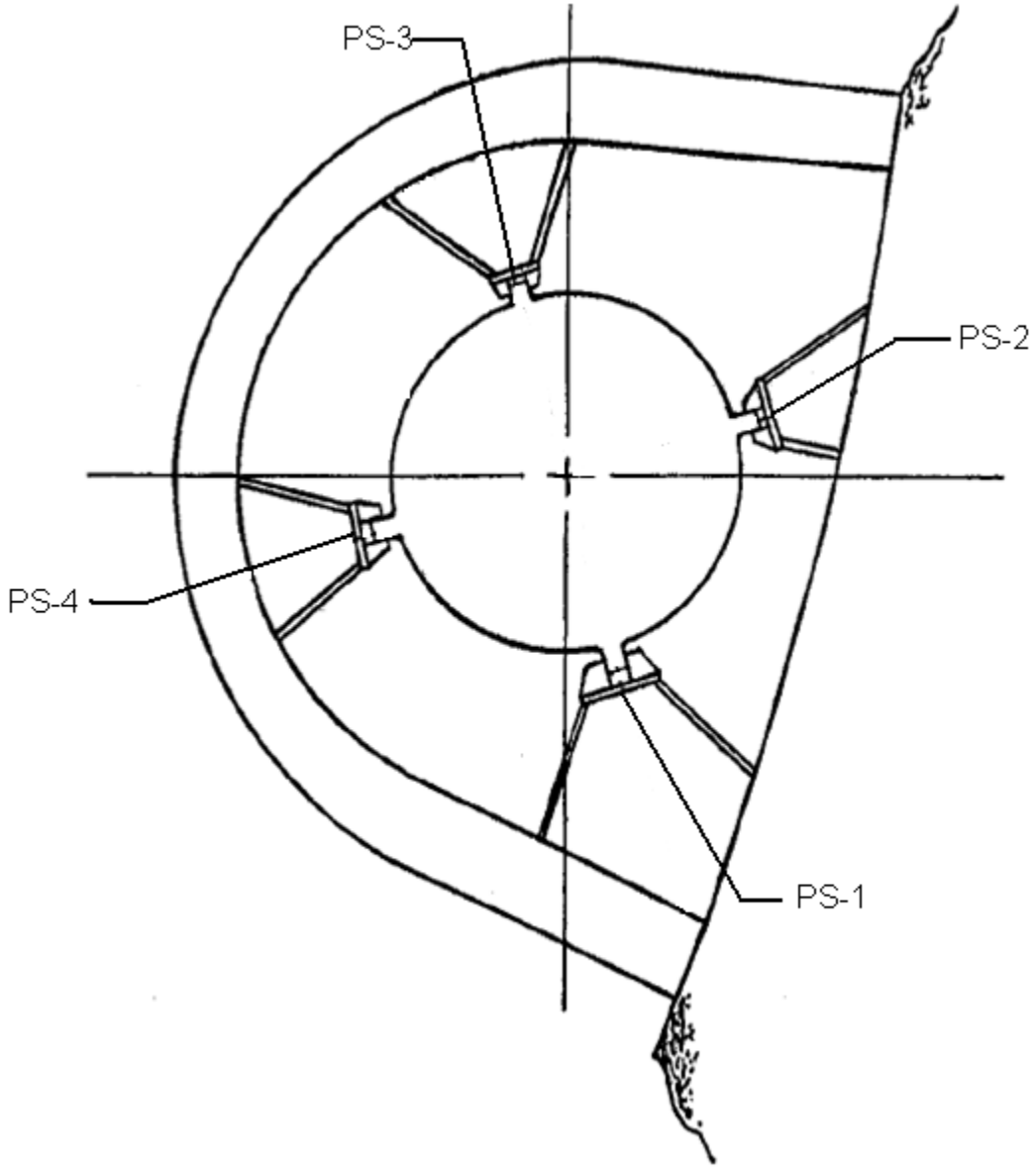

Attachment 16
(Page 26 of 35)

REACTOR COOLANT SYSTEM COMPONENT SUPPORT HOT FUNCTIONAL TEST 557° (553°-560°) TEMPERATURE DATA READINGS

Date _____

PRESSURIZER UPPER SUPPORT DATA SHEET

DATE: _____
TIME: _____
INITIALS: _____
SYSTEM TEMP: _____

GAP MEASUREMENTS

GAP NO.	BUMPER IDENTIFICATION			
	PS-1	PS-2	PS-3	PS-4
1				
2				
3				
4				
5				
6				
7				
8				

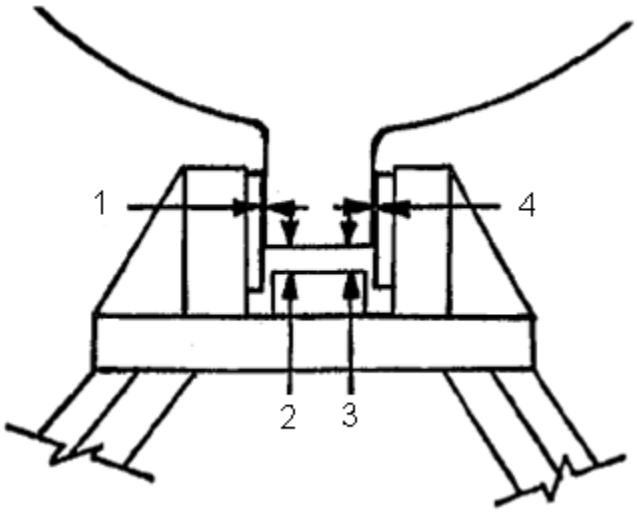

Attachment 16
(Page 27 of 35)

REACTOR COOLANT SYSTEM COMPONENT SUPPORT HOT FUNCTIONAL TEST 557° (553°-560°) TEMPERATURE DATA READINGS

Date _____

GENERAL LAYOUT OF STEAM GENERATORS AND REACTOR COOLANT PUMPS

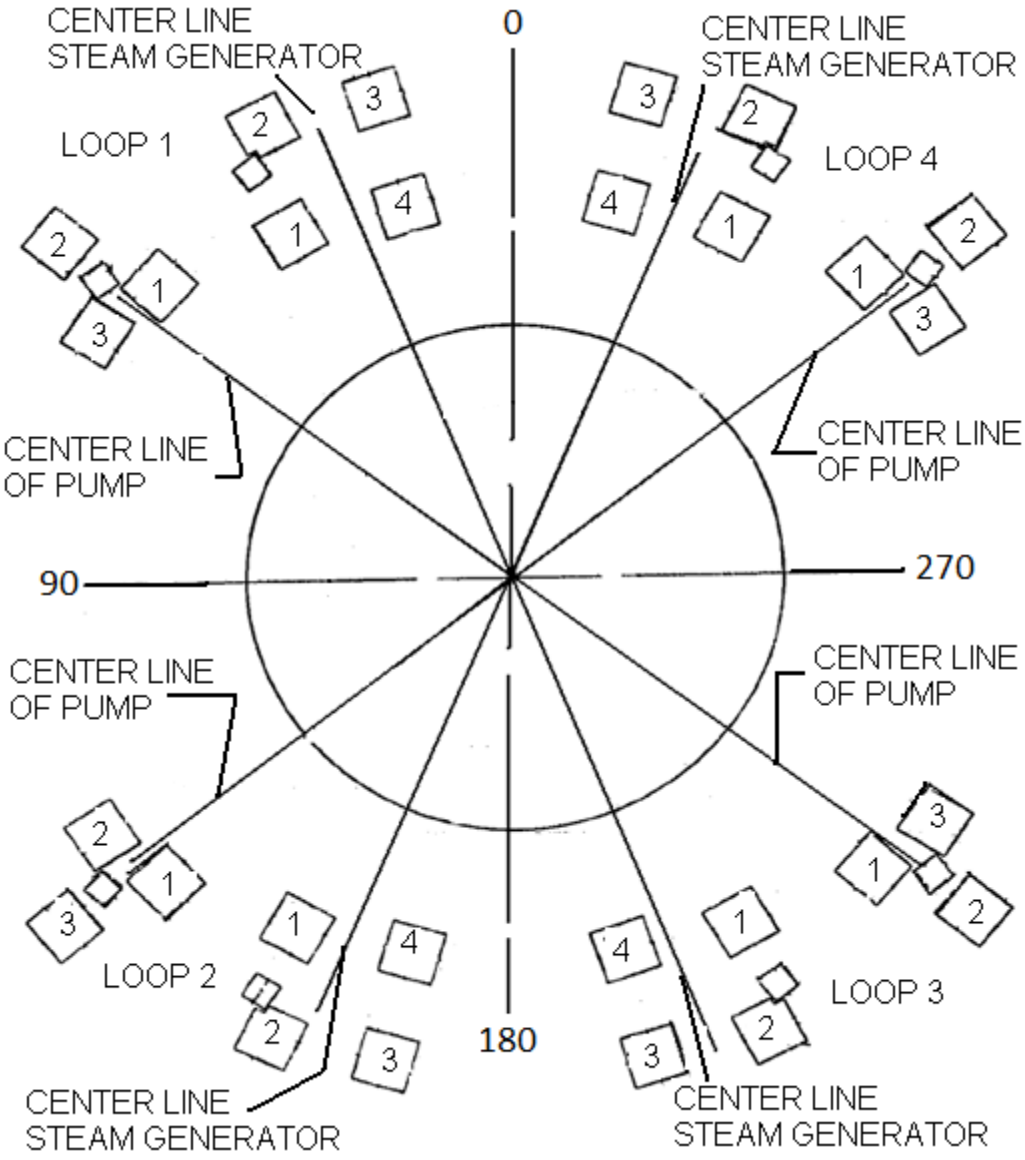

REACTOR COOLANT PUMP COLUMN DATA SHEET

Attachment 16
(Page 28 of 35)

REACTOR COOLANT SYSTEM COMPONENT SUPPORT HOT FUNCTIONAL TEST 557° (553°-560°) TEMPERATURE DATA READINGS

Date _____

RCP IDENTIFICATION RCP-1
DATE: _____
TIME: _____
INITIALS: _____
SYSTEM TEMP: _____

GAP NO.		COLUMNS		
		1	2	3
FRONT OR BACK	1			
SIDE	2			

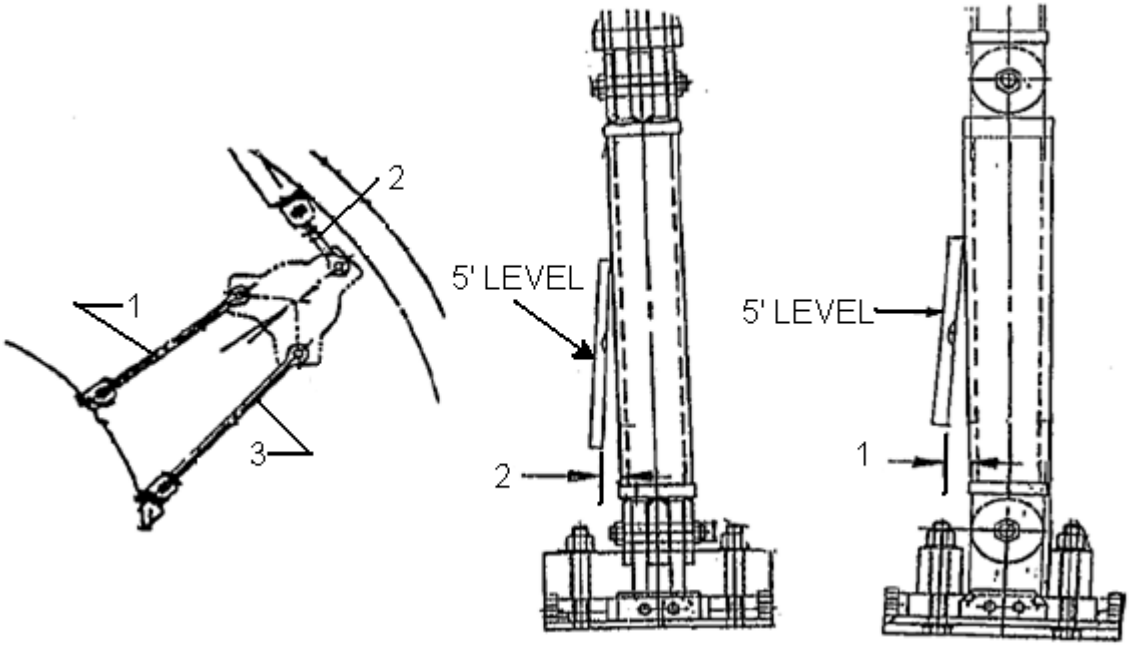

Attachment 16
(Page 29 of 35)

REACTOR COOLANT SYSTEM COMPONENT SUPPORT HOT FUNCTIONAL TEST 557° (553°-560°) TEMPERATURE DATA READINGS

Date _____

REACTOR COOLANT PUMP COLUMN DATA SHEET

RCP IDENTIFICATION RCP-2
DATE: _____
TIME: _____
INITIALS: _____
SYSTEM TEMP: _____

GAP NO.		COLUMNS		
		1	2	3
FRONT OR BACK	1			
SIDE	2			

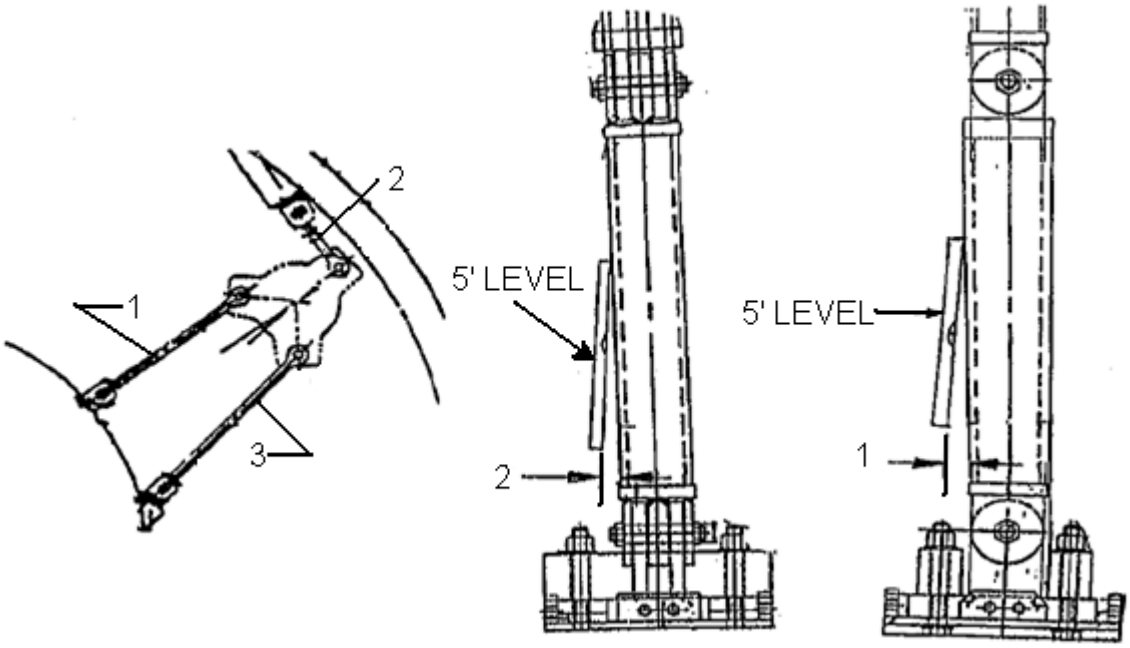

Attachment 16
(Page 30 of 35)

REACTOR COOLANT SYSTEM COMPONENT SUPPORT HOT FUNCTIONAL TEST 557° (553°-560°) TEMPERATURE DATA READINGS

Date _____

REACTOR COOLANT PUMP COLUMN DATA SHEET

RCP IDENTIFICATION RCP-3
DATE: _____
TIME: _____
INITIALS: _____
SYSTEM TEMP: _____

GAP NO.		COLUMNS		
		1	2	3
FRONT OR BACK	1			
SIDE	2			

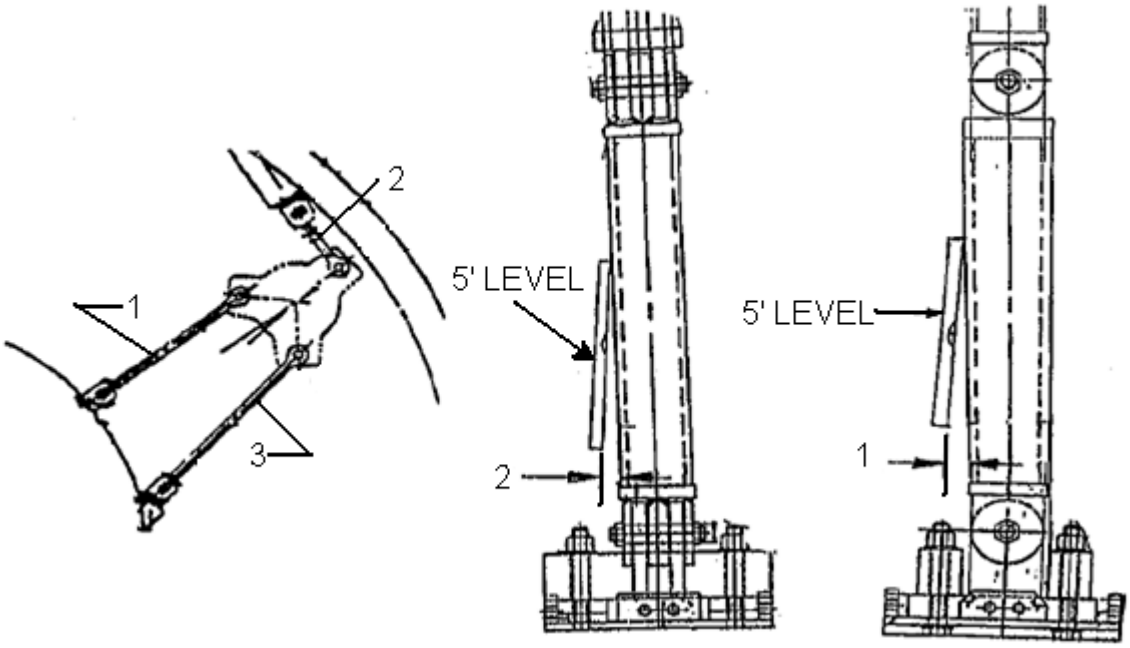

Attachment 16
(Page 31 of 35)

REACTOR COOLANT SYSTEM COMPONENT SUPPORT HOT FUNCTIONAL TEST 557° (553°-560°) TEMPERATURE DATA READINGS

Date _____

REACTOR COOLANT PUMP COLUMN DATA SHEET

RCP IDENTIFICATION RCP-4
DATE: _____
TIME: _____
INITIALS: _____
SYSTEM TEMP: _____

GAP NO.		COLUMNS		
		1	2	3
FRONT OR BACK	1			
SIDE	2			

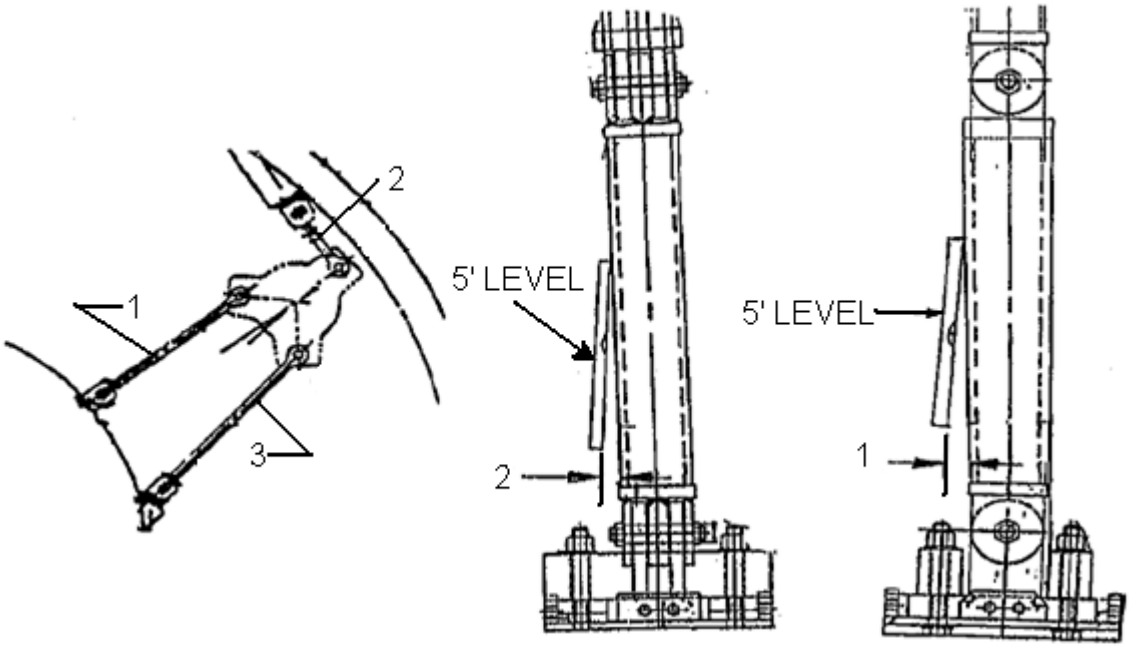

Attachment 16
(Page 32 of 35)

REACTOR COOLANT SYSTEM COMPONENT SUPPORT HOT FUNCTIONAL TEST 557° (553°-560°) TEMPERATURE DATA READINGS

Date _____

STEAM GENERATOR COLUMN DATA SHEET

SG IDENTIFICATION SG-1
DATE: _____
TIME: _____
INITIALS: _____
SYSTEM TEMP: _____

GAP NO.		COLUMNS			
		1	2	3	4
FRONT OR BACK	1				
SIDE	2				

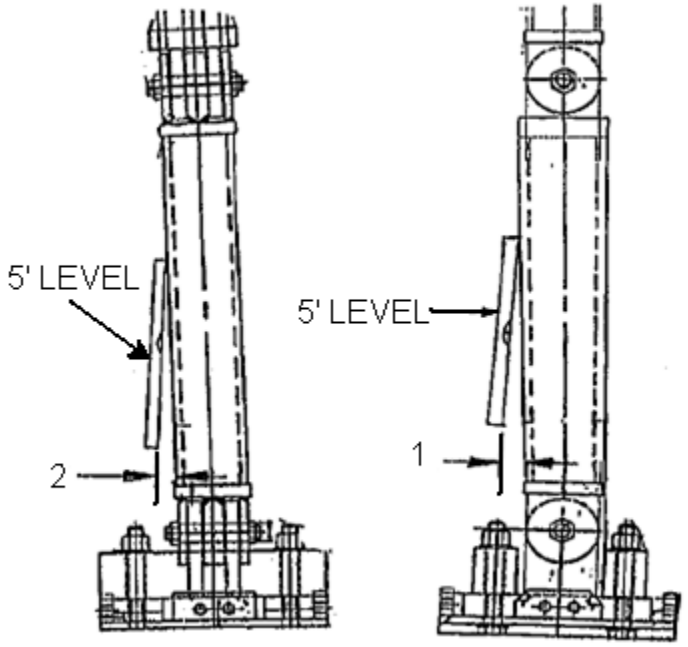

Attachment 16
(Page 33 of 35)

REACTOR COOLANT SYSTEM COMPONENT SUPPORT HOT FUNCTIONAL TEST 557° (553°-560°) TEMPERATURE DATA READINGS

Date _____

STEAM GENERATOR COLUMN DATA SHEET

SG IDENTIFICATION SG-2
DATE: _____
TIME: _____
INITIALS: _____
SYSTEM TEMP: _____

GAP NO.		COLUMNS			
		1	2	3	4
FRONT OR BACK	1				
SIDE	2				

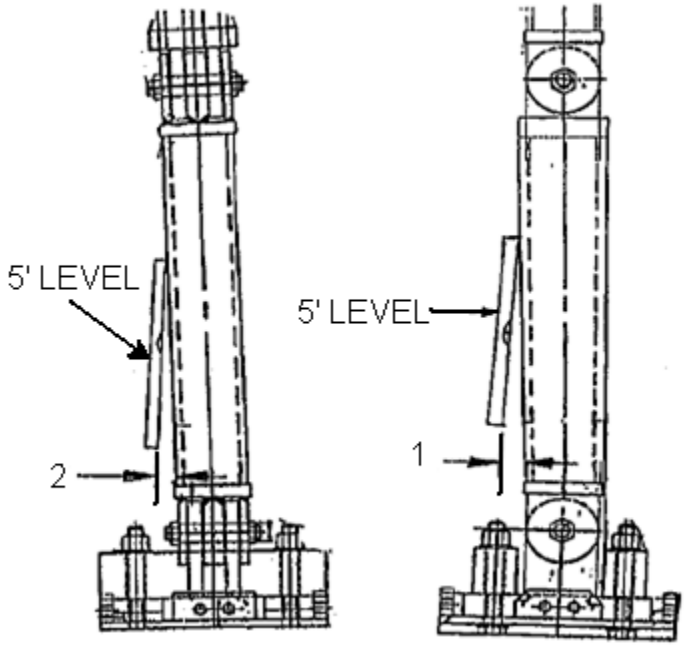

Attachment 16
(Page 34 of 35)

REACTOR COOLANT SYSTEM COMPONENT SUPPORT HOT FUNCTIONAL TEST 557° (553°-560°) TEMPERATURE DATA READINGS

Date _____

STEAM GENERATOR COLUMN DATA SHEET

SG IDENTIFICATION SG-3
DATE: _____
TIME: _____
INITIALS: _____
SYSTEM TEMP: _____

GAP NO.		COLUMNS			
		1	2	3	4
FRONT OR BACK	1				
SIDE	2				

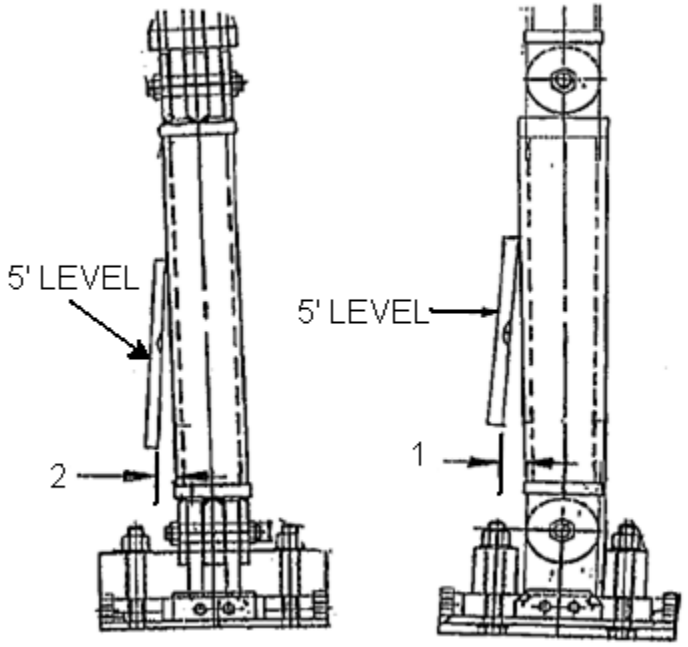

Attachment 16
(Page 35 of 35)

REACTOR COOLANT SYSTEM COMPONENT SUPPORT HOT FUNCTIONAL TEST 557° (553°-560°) TEMPERATURE DATA READINGS

Date _____

STEAM GENERATOR COLUMN DATA SHEET

SG IDENTIFICATION SG-4
DATE: _____
TIME: _____
INITIALS: _____
SYSTEM TEMP: _____

GAP NO.		COLUMNS			
		1	2	3	4
FRONT OR BACK	1				
SIDE	2				

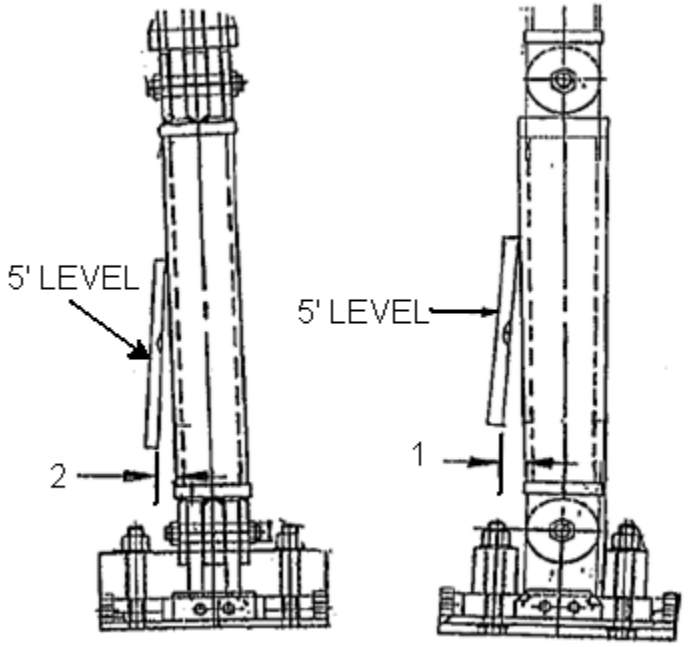

Attachment 17
(Page 1 of 35)

REACTOR COOLANT SYSTEM COMPONENT SUPPORT POST HOT FUNCTIONAL TEST AMBIENT TEMPERATURE <105°F DATA READINGS

Date _____

STEAM GENERATOR UPPER SUPPORT LAYOUT DETAIL

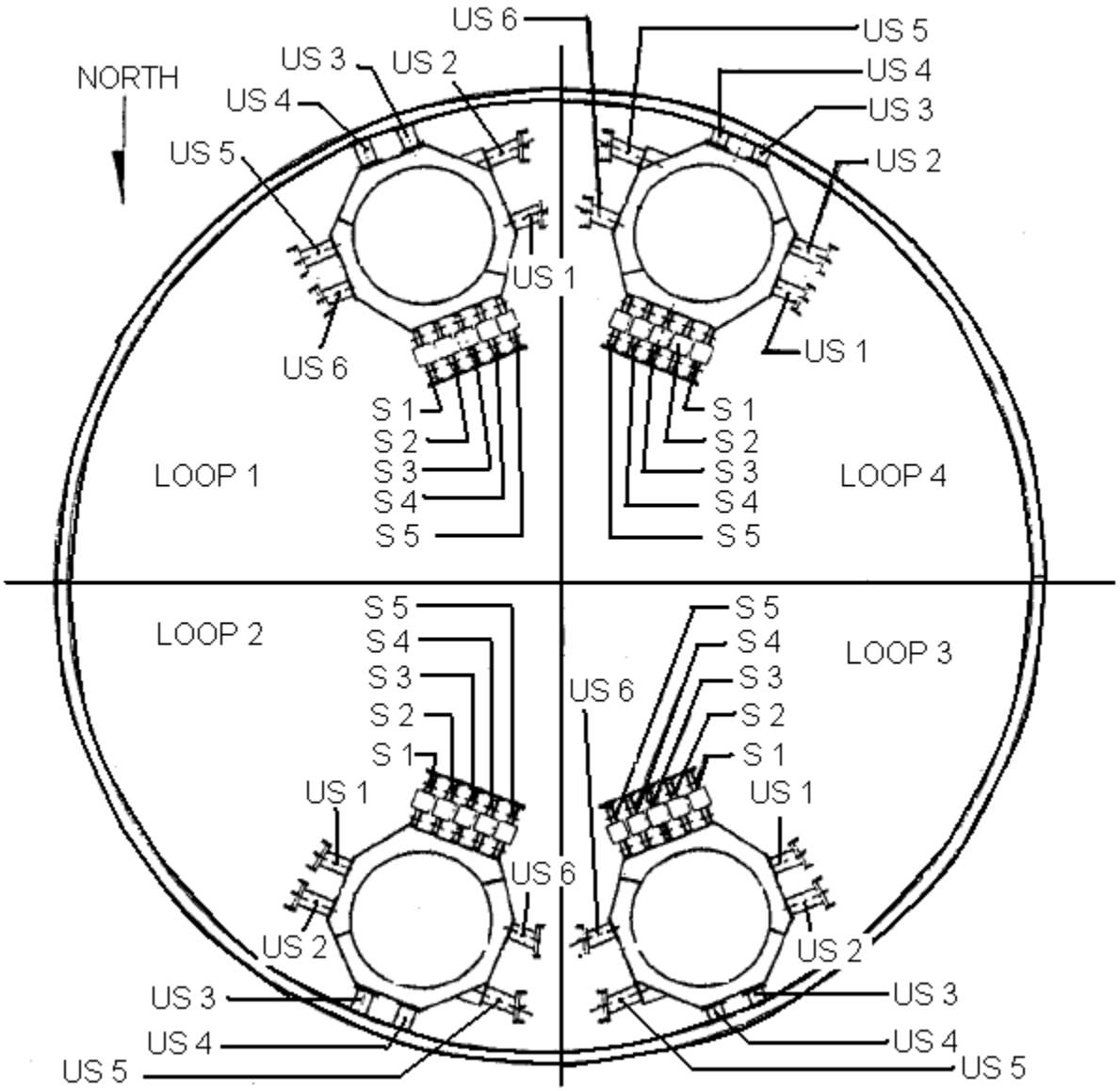

Attachment 17
(Page 2 of 35)

REACTOR COOLANT SYSTEM COMPONENT SUPPORT POST HOT FUNCTIONAL TEST AMBIENT TEMPERATURE <105°F DATA READINGS

Date _____

STEAM GENERATOR UPPER SUPPORT DYNAMIC SNUBBERS DATA SHEET

SG IDENTIFICATION SG-1
INITIALS: _____
SYSTEM TEMP: _____

ROD MEASUREMENT "A"

DATE	TIME	DYNAMIC SNUBBERS IDENTIFICATION				
		S-1	S-2	S-3	S-4	S-5

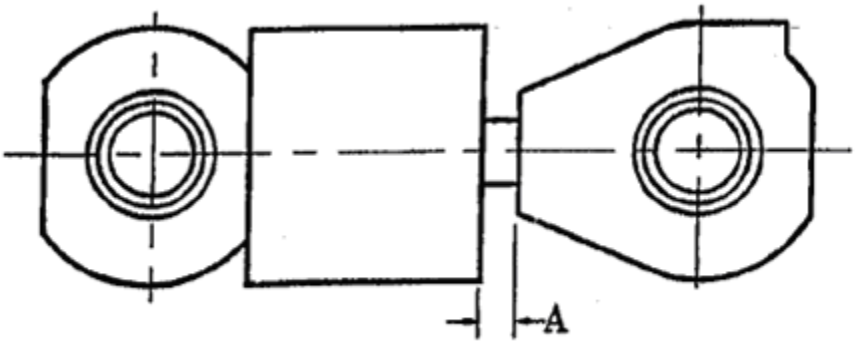

Attachment 17
(Page 3 of 35)

REACTOR COOLANT SYSTEM COMPONENT SUPPORT POST HOT FUNCTIONAL TEST AMBIENT TEMPERATURE <105°F DATA READINGS

Date _____

STEAM GENERATOR UPPER SUPPORT DYNAMIC SNUBBERS DATA SHEET

SG IDENTIFICATION SG-2
INITIALS: _____
SYSTEM TEMP: _____

ROD MEASUREMENT "A"

DATE	TIME	DYNAMIC SNUBBERS IDENTIFICATION				
		S-1	S-2	S-3	S-4	S-5

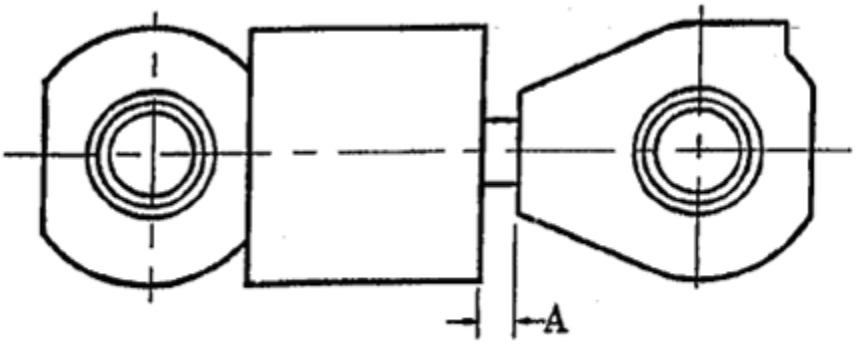

Attachment 17
(Page 4 of 35)

REACTOR COOLANT SYSTEM COMPONENT SUPPORT POST HOT FUNCTIONAL TEST AMBIENT TEMPERATURE <105°F DATA READINGS

Date _____

STEAM GENERATOR UPPER SUPPORT DYNAMIC SNUBBERS DATA SHEET

SG IDENTIFICATION SG-3
INITIALS: _____
SYSTEM TEMP: _____

ROD MEASUREMENT "A"

DATE	TIME	DYNAMIC SNUBBERS IDENTIFICATION				
		S-1	S-2	S-3	S-4	S-5

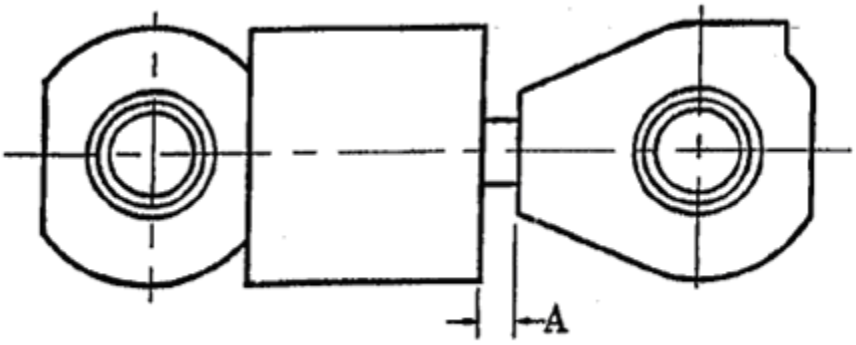

Attachment 17
(Page 5 of 35)

REACTOR COOLANT SYSTEM COMPONENT SUPPORT POST HOT FUNCTIONAL TEST AMBIENT TEMPERATURE <105°F DATA READINGS

Date _____

STEAM GENERATOR UPPER SUPPORT DYNAMIC SNUBBERS DATA SHEET

SG IDENTIFICATION SG-4
INITIALS: _____
SYSTEM TEMP: _____

ROD MEASUREMENT "A"

DATE	TIME	DYNAMIC SNUBBERS IDENTIFICATION				
		S-1	S-2	S-3	S-4	S-5

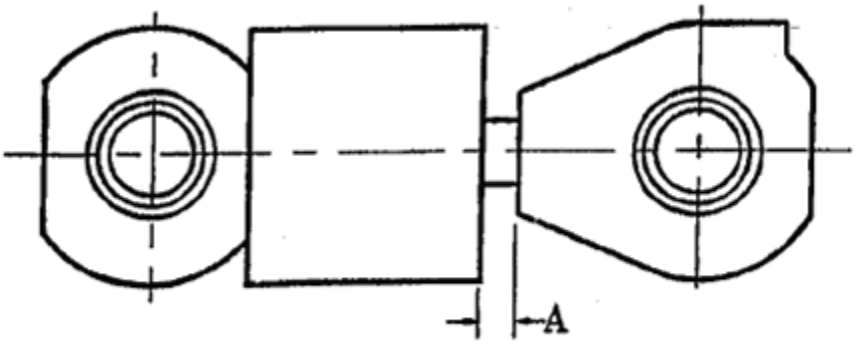

Attachment 17
(Page 6 of 35)

REACTOR COOLANT SYSTEM COMPONENT SUPPORT POST HOT FUNCTIONAL TEST AMBIENT TEMPERATURE <105°F DATA READINGS

Date _____

STEAM GENERATOR UPPER SUPPORT DATA SHEET

SG IDENTIFICATION SG-1
DATE: _____
TIME: _____
INITIALS: _____
SYSTEM TEMP: _____

GAP MEASUREMENTS

GAP NO.	BUMPER IDENTIFICATION					
	US-1	US-2	US-3	US-4	US-5	US-6
1						
2						
3						
4						

NOTE

Visual inspection only for US-1, US-2, US-5 and US-6. Record as “SAT” (Satisfactory) or “UNSAT” (Unsatisfactory for gap 1. If “UNSAT” is recorded, give brief description of condition in box provided (gaps 2, 3, and 4).

Gaps 3 and 4 are below 1 and 2 respectively for US-3 and US-4.

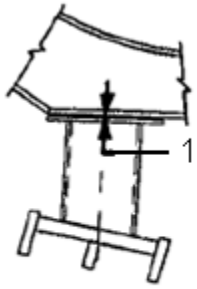

US-1 & US-2

US-5 & US-6

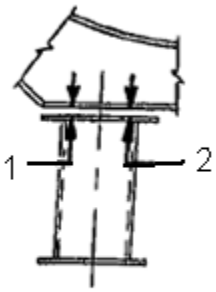

US-3 & US-4

Attachment 17
(Page 7 of 35)

REACTOR COOLANT SYSTEM COMPONENT SUPPORT POST HOT FUNCTIONAL TEST AMBIENT TEMPERATURE <105°F DATA READINGS

Date _____

STEAM GENERATOR UPPER SUPPORT DATA SHEET

SG IDENTIFICATION SG-2
DATE: _____
TIME: _____
INITIALS: _____
SYSTEM TEMP: _____

GAP MEASUREMENTS

GAP NO.	BUMPER IDENTIFICATION					
	US-1	US-2	US-3	US-4	US-5	US-6
1						
2						
3						
4						

NOTE

Visual inspection only for US-1, US-2, US-5 and US-6. Record as “SAT” (Satisfactory) or “UNSAT” (Unsatisfactory for gap 1. If “UNSAT” is recorded, give brief description of condition in box provided (gaps 2, 3, and 4).

Gaps 3 and 4 are below 1 and 2 respectively for US-3 and US-4.

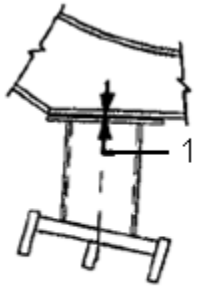

US-1 & US-2

US-5 & US-6

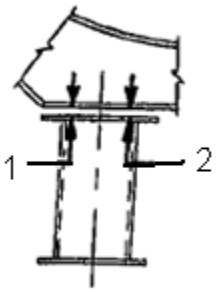

US-3 & US-4

Attachment 17
(Page 8 of 35)

REACTOR COOLANT SYSTEM COMPONENT SUPPORT POST HOT FUNCTIONAL TEST AMBIENT TEMPERATURE <105°F DATA READINGS

Date _____

STEAM GENERATOR UPPER SUPPORT DATA SHEET

SG IDENTIFICATION SG-3
DATE: _____
TIME: _____
INITIALS: _____
SYSTEM TEMP: _____

GAP MEASUREMENTS

GAP NO.	BUMPER IDENTIFICATION					
	US-1	US-2	US-3	US-4	US-5	US-6
1						
2						
3						
4						

NOTE

Visual inspection only for US-1, US-2, US-5 and US-6. Record as “SAT” (Satisfactory) or “UNSAT” (Unsatisfactory for gap 1. If “UNSAT” is recorded, give brief description of condition in box provided (gaps 2, 3, and 4).

Gaps 3 and 4 are below 1 and 2 respectively for US-3 and US-4.

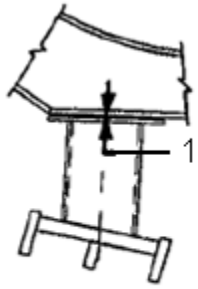

US-1 & US-2

US-5 & US-6

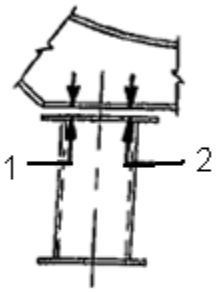

US-3 & US-4

Attachment 17
(Page 9 of 35)

REACTOR COOLANT SYSTEM COMPONENT SUPPORT POST HOT FUNCTIONAL TEST AMBIENT TEMPERATURE <105°F DATA READINGS

Date _____

STEAM GENERATOR UPPER SUPPORT DATA SHEET

SG IDENTIFICATION SG-4
DATE: _____
TIME: _____
INITIALS: _____
SYSTEM TEMP: _____

GAP MEASUREMENTS

GAP NO.	BUMPER IDENTIFICATION					
	US-1	US-2	US-3	US-4	US-5	US-6
1						
2						
3						
4						

NOTE

Visual inspection only for US-1, US-2, US-5 and US-6. Record as “SAT” (Satisfactory) or “UNSAT” (Unsatisfactory for gap 1. If “UNSAT” is recorded, give brief description of condition in box provided (gaps 2, 3, and 4).

Gaps 3 and 4 are below 1 and 2 respectively for US-3 and US-4.

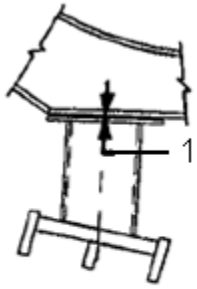

US-1 & US-2

US-5 & US-6

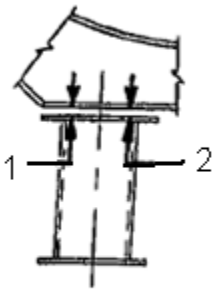

US-3 & US-4

Attachment 17
(Page 10 of 35)

REACTOR COOLANT SYSTEM COMPONENT SUPPORT POST HOT FUNCTIONAL TEST AMBIENT TEMPERATURE <105°F DATA READINGS

Date _____

STEAM GENERATOR LOWER SUPPORT LAYOUT DETAILS

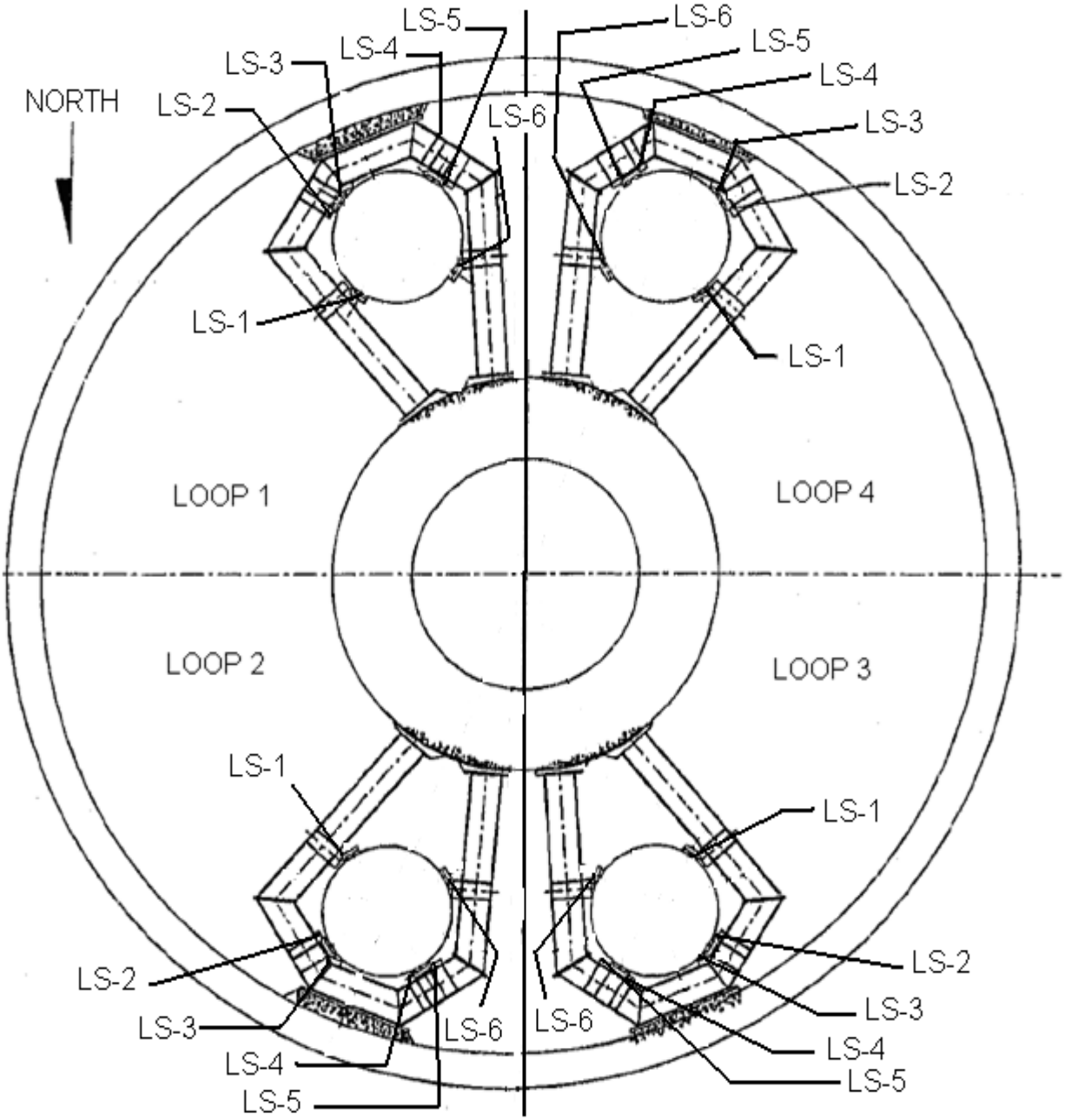

Attachment 17
(Page 11 of 35)

REACTOR COOLANT SYSTEM COMPONENT SUPPORT POST HOT FUNCTIONAL TEST AMBIENT TEMPERATURE <105°F DATA READINGS

Date _____

STEAM GENERATOR LOWER SUPPORT DATA SHEET

SG IDENTIFICATION SG-1
DATE: _____
TIME: _____
INITIALS: _____
SYSTEM TEMP: _____

GAP MEASUREMENTS

GAP NO.	BUMPER IDENTIFICATION					
	LS-1	LS-2	LS-3	LS-4	LS-5	LS-6
1						
2						
3						
4						

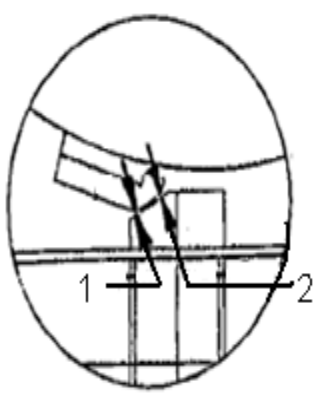

LS-1

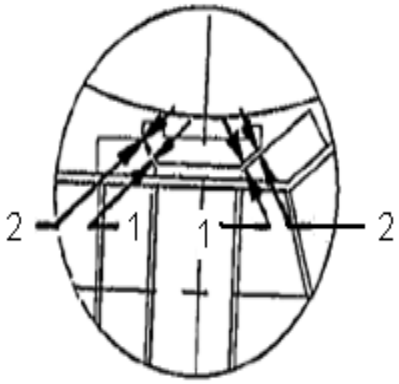

LS-2 & LS-3

LS-4 & LS-5

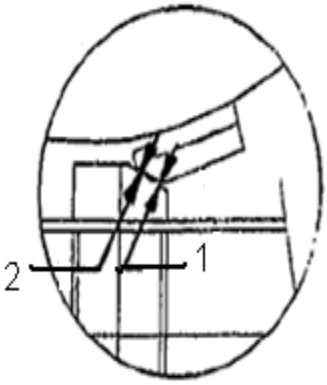

LS-6

Attachment 17
(Page 12 of 35)

REACTOR COOLANT SYSTEM COMPONENT SUPPORT POST HOT FUNCTIONAL TEST AMBIENT TEMPERATURE <105°F DATA READINGS

Date _____

STEAM GENERATOR LOWER SUPPORT DATA SHEET

SG IDENTIFICATION SG-2
DATE: _____
TIME: _____
INITIALS: _____
SYSTEM TEMP: _____

GAP MEASUREMENTS

GAP NO.	BUMPER IDENTIFICATION					
	LS-1	LS-2	LS-3	LS-4	LS-5	LS-6
1						
2						
3						
4						

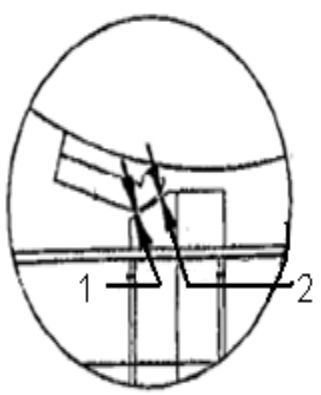

LS-1

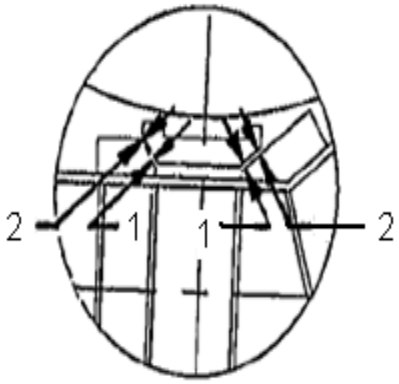

LS-2 & LS-3

LS-4 & LS-5

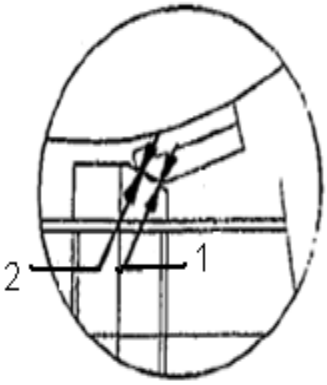

LS-6

Attachment 17
(Page 13 of 35)

REACTOR COOLANT SYSTEM COMPONENT SUPPORT POST HOT FUNCTIONAL TEST AMBIENT TEMPERATURE <105°F DATA READINGS

Date _____

STEAM GENERATOR LOWER SUPPORT DATA SHEET

SG IDENTIFICATION SG-3
DATE: _____
TIME: _____
INITIALS: _____
SYSTEM TEMP: _____

GAP MEASUREMENTS

GAP NO.	BUMPER IDENTIFICATION					
	LS-1	LS-2	LS-3	LS-4	LS-5	LS-6
1						
2						
3						
4						

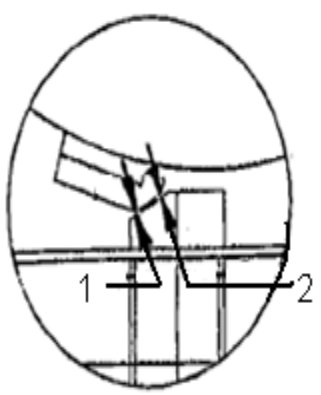

LS-1

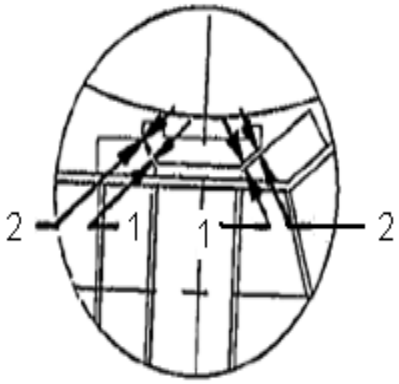

LS-2 & LS-3

LS-4 & LS-5

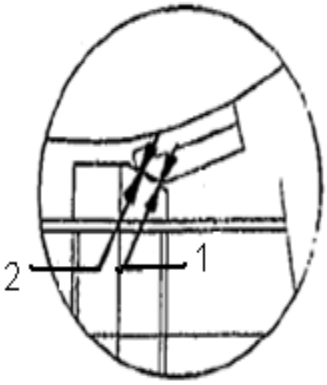

LS-6

Attachment 17
(Page 14 of 35)

REACTOR COOLANT SYSTEM COMPONENT SUPPORT POST HOT FUNCTIONAL TEST AMBIENT TEMPERATURE <105°F DATA READINGS

Date _____

STEAM GENERATOR LOWER SUPPORT DATA SHEET

SG IDENTIFICATION SG-4
DATE: _____
TIME: _____
INITIALS: _____
SYSTEM TEMP: _____

GAP MEASUREMENTS

GAP NO.	BUMPER IDENTIFICATION					
	LS-1	LS-2	LS-3	LS-4	LS-5	LS-6
1						
2						
3						
4						

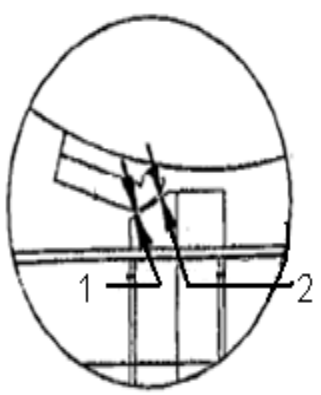

LS-1

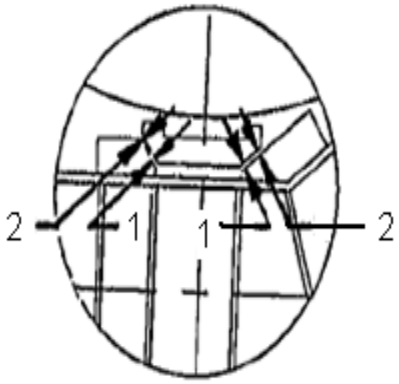

LS-2 & LS-3

LS-4 & LS-5

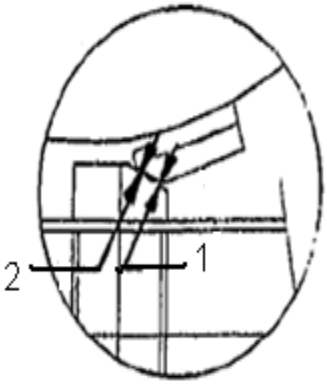

LS-6

Attachment 17
(Page 15 of 35)

REACTOR COOLANT SYSTEM COMPONENT SUPPORT POST HOT FUNCTIONAL TEST AMBIENT TEMPERATURE <105°F DATA READINGS

Date _____

REACTOR COOLANT PUMP TIE ROD LAYOUT DETAILS

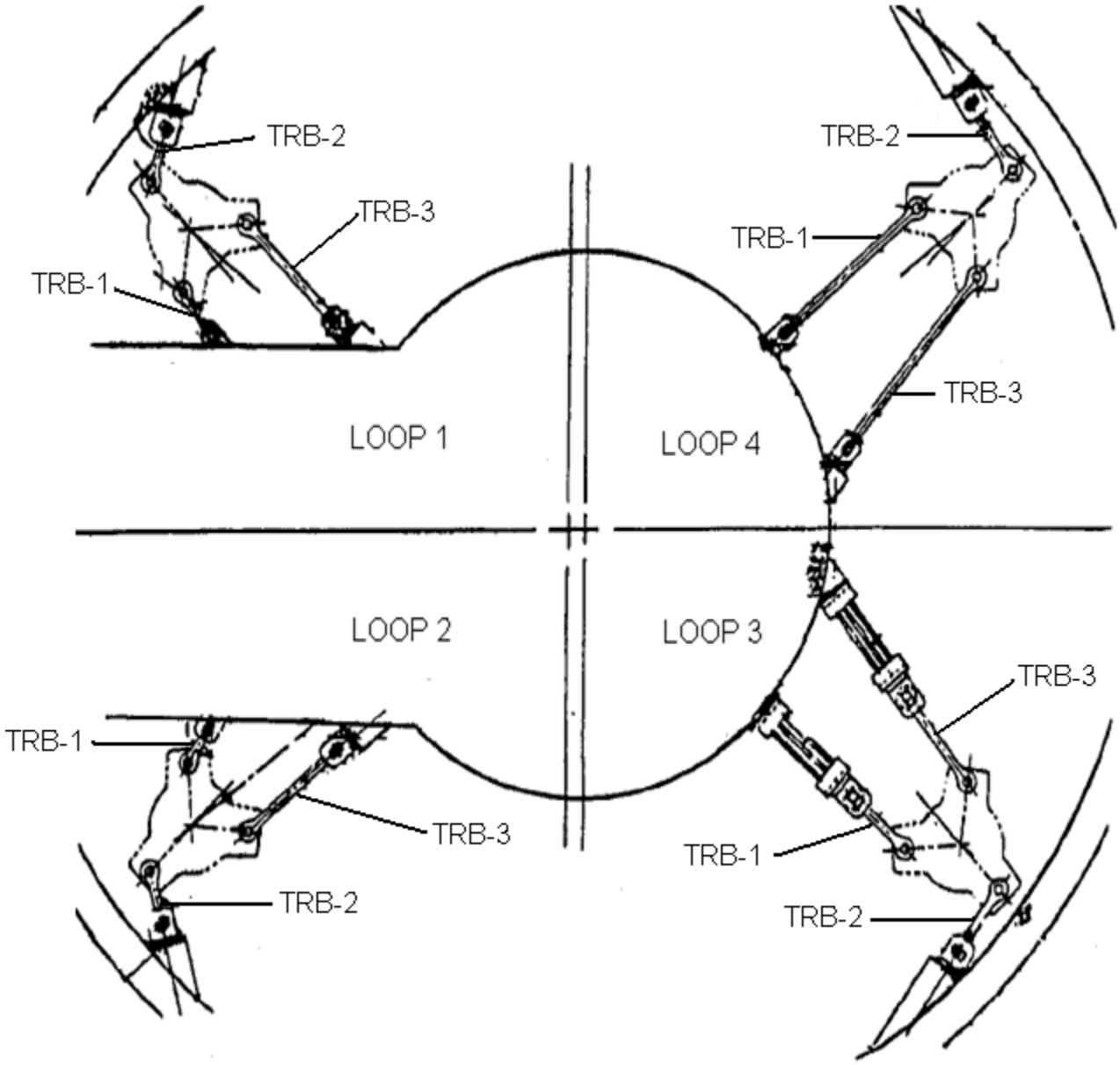

Attachment 17
(Page 16 of 35)

REACTOR COOLANT SYSTEM COMPONENT SUPPORT POST HOT FUNCTIONAL TEST AMBIENT TEMPERATURE <105°F DATA READINGS

Date _____

REACTOR COOLANT PUMP TIE ROD DATA SHEET

RCP IDENTIFICATION RCP-1
DATE: _____
TIME: _____
INITIALS: _____
SYSTEM TEMP: _____

GAP MEASUREMENTS

GAP NO.		TIE ROD BRACKET IDENTIFICATION		
		TRB-1 (INSIDE)	TRB-2 (BACK)	TRB-3 (OUTSIDE)
TOP	1F			
	1B			
BOT	2F			
	2B			

NOTE

"F" is the front side (shimmed side) of the pin.

"B" is the back side (un-shimmed side) of the pin.

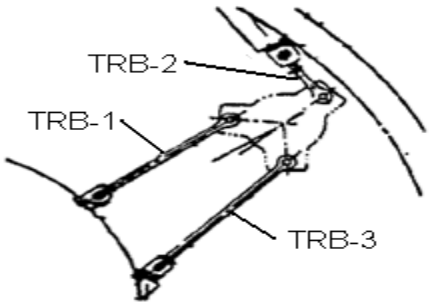

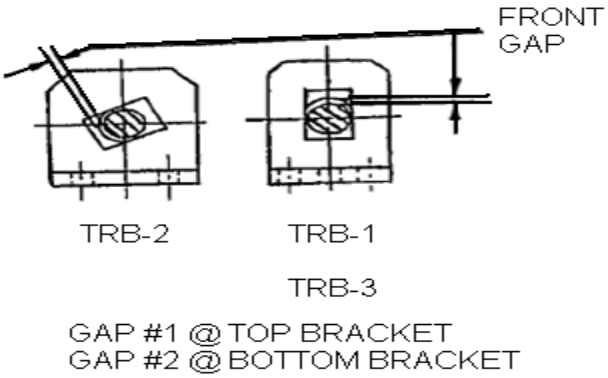

Attachment 17
(Page 17 of 35)

REACTOR COOLANT SYSTEM COMPONENT SUPPORT POST HOT FUNCTIONAL TEST AMBIENT TEMPERATURE <105°F DATA READINGS

Date _____

REACTOR COOLANT PUMP TIE ROD DATA SHEET

RCP IDENTIFICATION RCP-2
DATE: _____
TIME: _____
INITIALS: _____
SYSTEM TEMP: _____

GAP MEASUREMENTS

GAP NO.		TIE ROD BRACKET IDENTIFICATION		
		TRB-1 (INSIDE)	TRB-2 (BACK)	TRB-3 (OUTSIDE)
TOP	1F			
	1B			
BOT	2F			
	2B			

NOTE

"F" is the front side (shimmed side) of the pin.

"B" is the back side (un-shimmed side) of the pin.

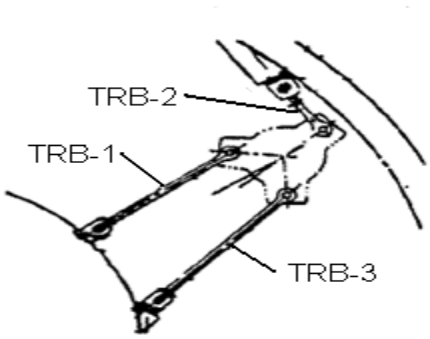

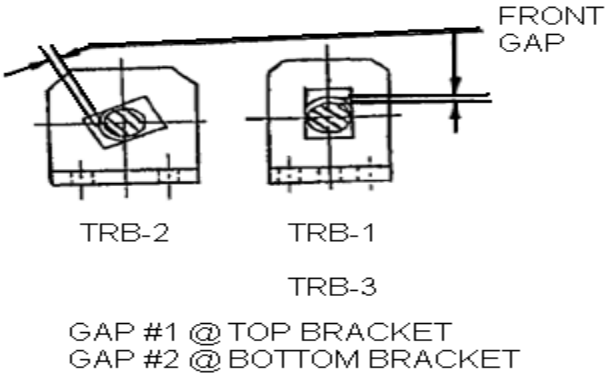

Attachment 17
(Page 18 of 35)

REACTOR COOLANT SYSTEM COMPONENT SUPPORT POST HOT FUNCTIONAL TEST AMBIENT TEMPERATURE <105°F DATA READINGS

Date _____

REACTOR COOLANT PUMP TIE ROD DATA SHEET

RCP IDENTIFICATION RCP-3
DATE: _____
TIME: _____
INITIALS: _____
SYSTEM TEMP: _____

GAP MEASUREMENTS

GAP NO.		TIE ROD BRACKET IDENTIFICATION		
		TRB-1 (INSIDE)	TRB-2 (BACK)	TRB-3 (OUTSIDE)
TOP	1F			
	1B			
BOT	2F			
	2B			

NOTE

"F" is the front side (shimmed side) of the pin.

"B" is the back side (un-shimmed side) of the pin.

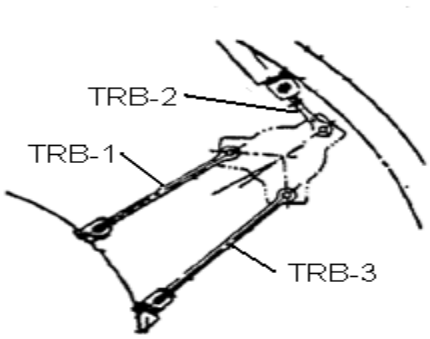

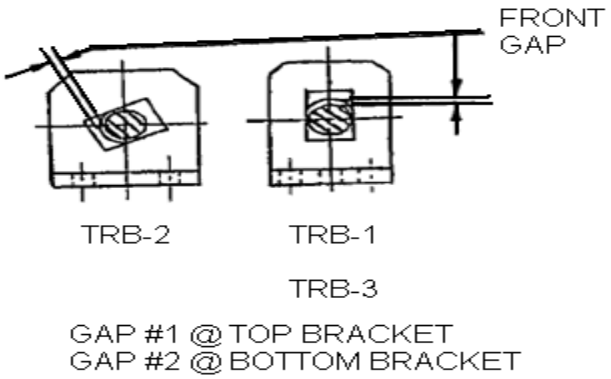

Attachment 17
(Page 19 of 35)

REACTOR COOLANT SYSTEM COMPONENT SUPPORT POST HOT FUNCTIONAL TEST AMBIENT TEMPERATURE <105°F DATA READINGS

Date _____

REACTOR COOLANT PUMP TIE ROD DATA SHEET

RCP IDENTIFICATION RCP-4
DATE: _____
TIME: _____
INITIALS: _____
SYSTEM TEMP: _____

GAP MEASUREMENTS

GAP NO.		TIE ROD BRACKET IDENTIFICATION		
		TRB-1 (INSIDE)	TRB-2 (BACK)	TRB-3 (OUTSIDE)
TOP	1F			
	1B			
BOT	2F			
	2B			

NOTE

"F" is the front side (shimmed side) of the pin.

"B" is the back side (un-shimmed side) of the pin.

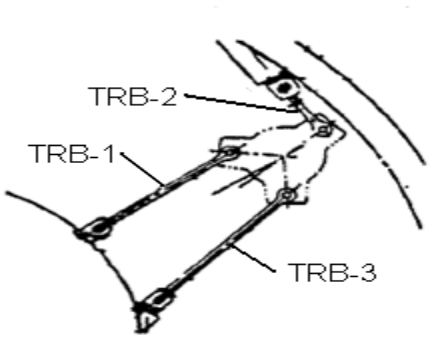

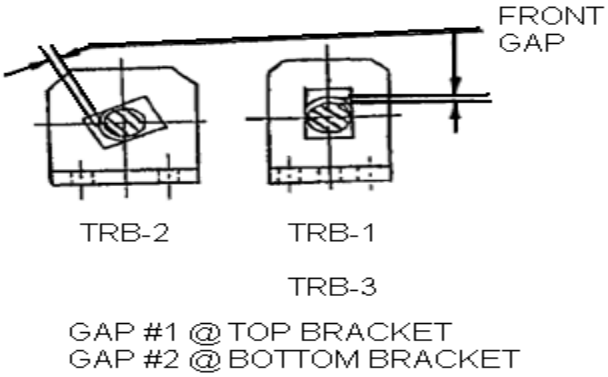

Attachment 17
(Page 20 of 35)

REACTOR COOLANT SYSTEM COMPONENT SUPPORT POST HOT FUNCTIONAL TEST AMBIENT TEMPERATURE <105°F DATA READINGS

Date _____

CROSS OVER LEG ELBOW SUPPORT LAYOUT DETAILS

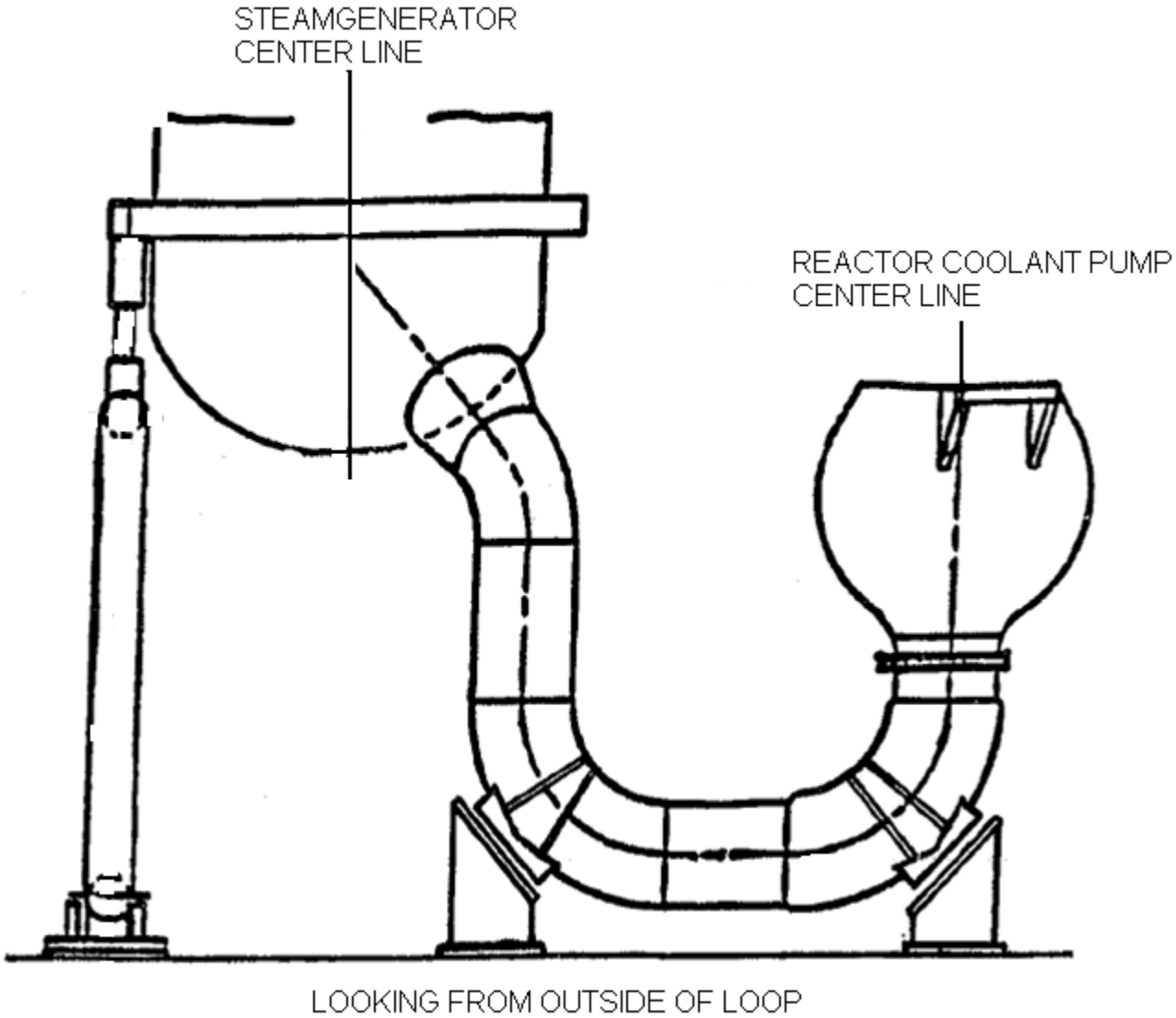

CROSS OVER LEG ELBOW SUPPORT DATA SHEET

Attachment 17
(Page 21 of 35)

REACTOR COOLANT SYSTEM COMPONENT SUPPORT POST HOT FUNCTIONAL TEST AMBIENT TEMPERATURE <105°F DATA READINGS

Date _____

LOOP IDENTIFICATION SG-1
DATE: _____
TIME: _____
INITIALS: _____
SYSTEM TEMP: _____

GAP MEASUREMENTS

SUPPORT	GAP 1	GAP 2	GAP 3	GAP 4
XLSG				
XLRCP				

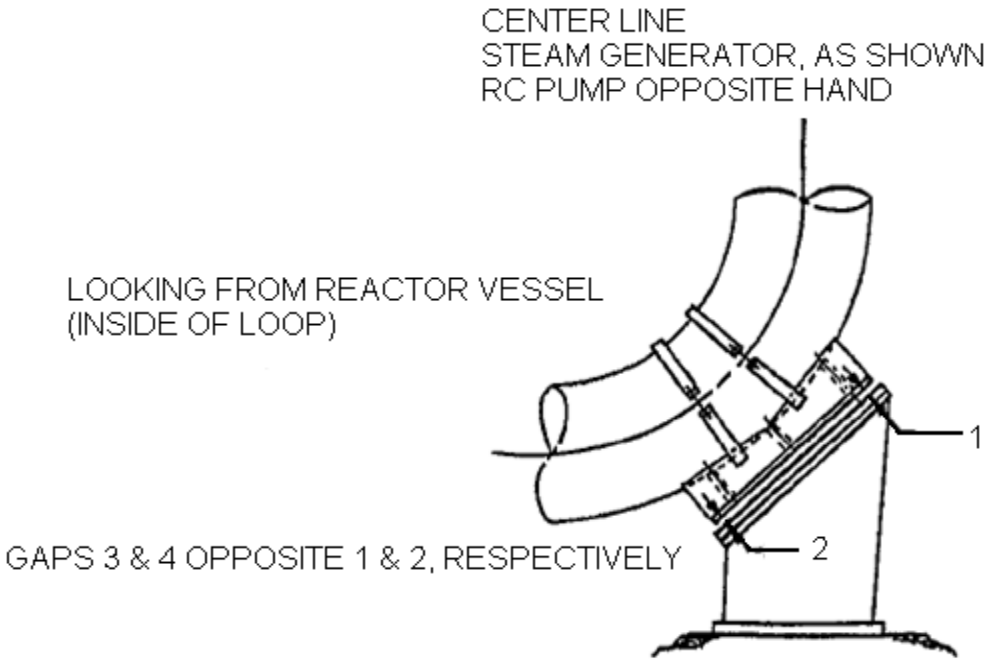

Attachment 17
(Page 22 of 35)

REACTOR COOLANT SYSTEM COMPONENT SUPPORT POST HOT FUNCTIONAL TEST AMBIENT TEMPERATURE <105°F DATA READINGS

Date _____

CROSS OVER LEG ELBOW SUPPORT DATA SHEET

LOOP IDENTIFICATION SG-2
DATE: _____
TIME: _____
INITIALS: _____
SYSTEM TEMP: _____

GAP MEASUREMENTS

SUPPORT	GAP 1	GAP 2	GAP 3	GAP 4
XLSG				
XLRCP				

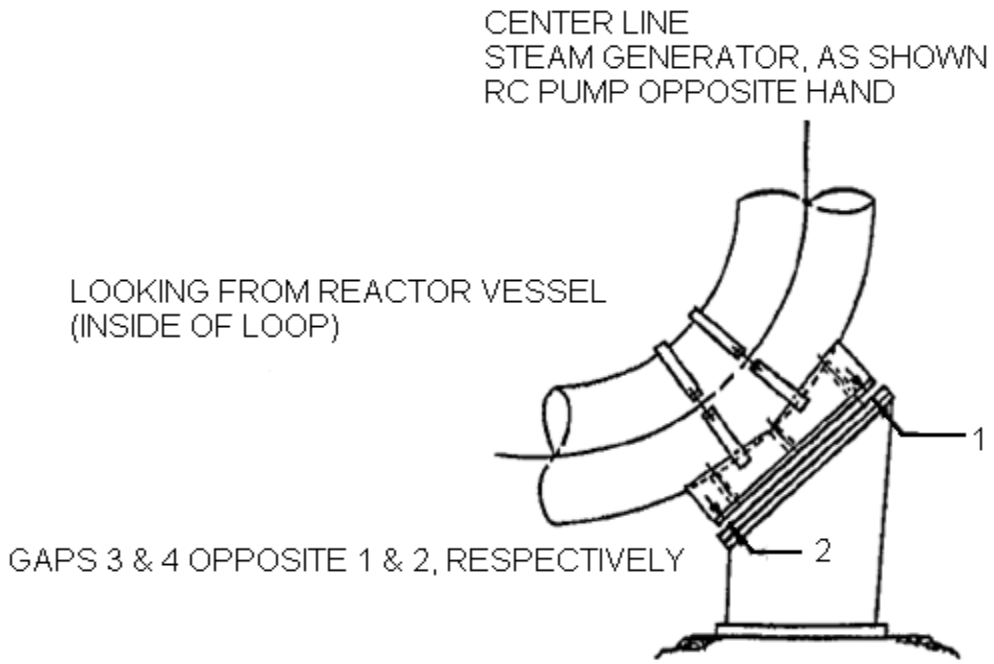

Attachment 17
(Page 23 of 35)

REACTOR COOLANT SYSTEM COMPONENT SUPPORT POST HOT FUNCTIONAL TEST AMBIENT TEMPERATURE <105°F DATA READINGS

Date _____

CROSS OVER LEG ELBOW SUPPORT DATA SHEET

LOOP IDENTIFICATION SG-3
DATE: _____
TIME: _____
INITIALS: _____
SYSTEM TEMP: _____

GAP MEASUREMENTS

SUPPORT	GAP 1	GAP 2	GAP 3	GAP 4
XLSG				
XLRCP				

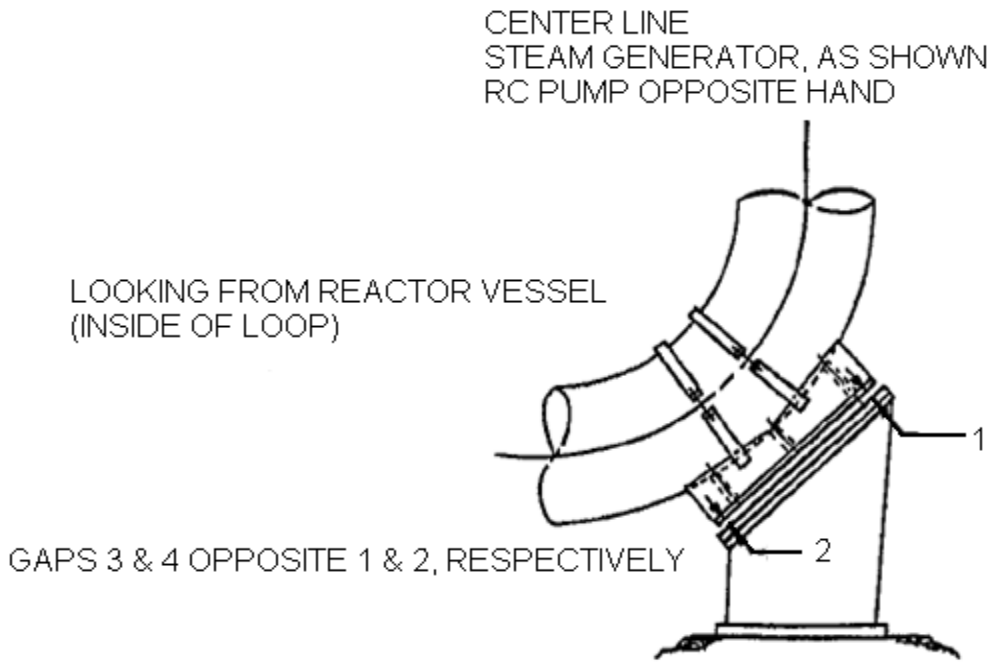

Attachment 17
(Page 24 of 35)

REACTOR COOLANT SYSTEM COMPONENT SUPPORT POST HOT FUNCTIONAL TEST AMBIENT TEMPERATURE <105°F DATA READINGS

Date _____

CROSS OVER LEG ELBOW SUPPORT DATA SHEET

LOOP IDENTIFICATION SG-4
DATE: _____
TIME: _____
INITIALS: _____
SYSTEM TEMP: _____

GAP MEASUREMENTS

SUPPORT	GAP 1	GAP 2	GAP 3	GAP 4
XLSG				
XLRCP				

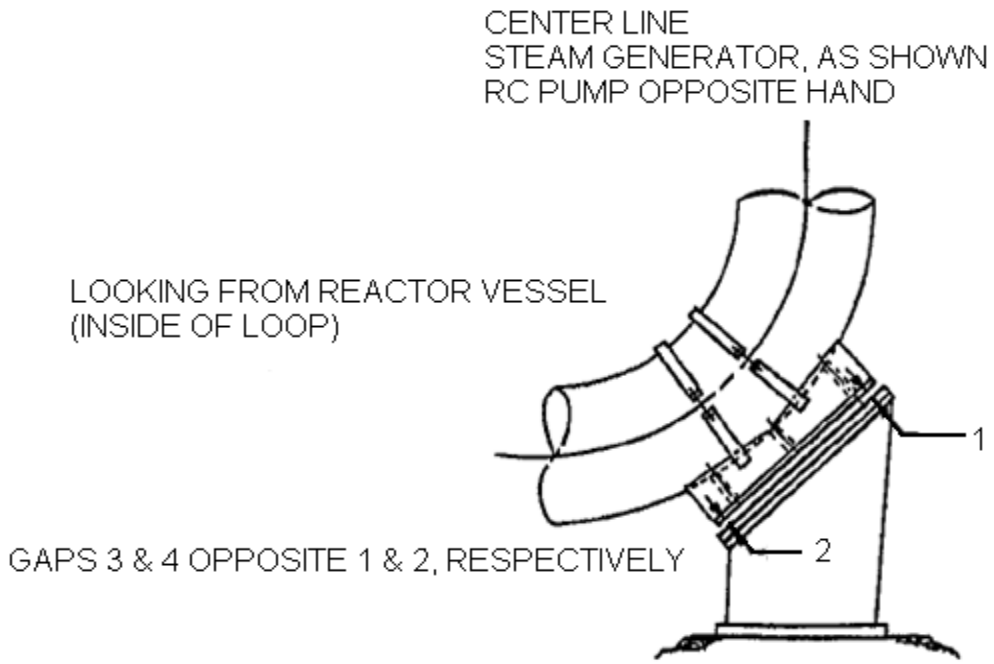

Attachment 17
(Page 25 of 35)

REACTOR COOLANT SYSTEM COMPONENT SUPPORT POST HOT FUNCTIONAL TEST AMBIENT TEMPERATURE <105°F DATA READINGS

Date _____

PRESSURIZER UPPER SUPPORTS LAYOUT DETAILS

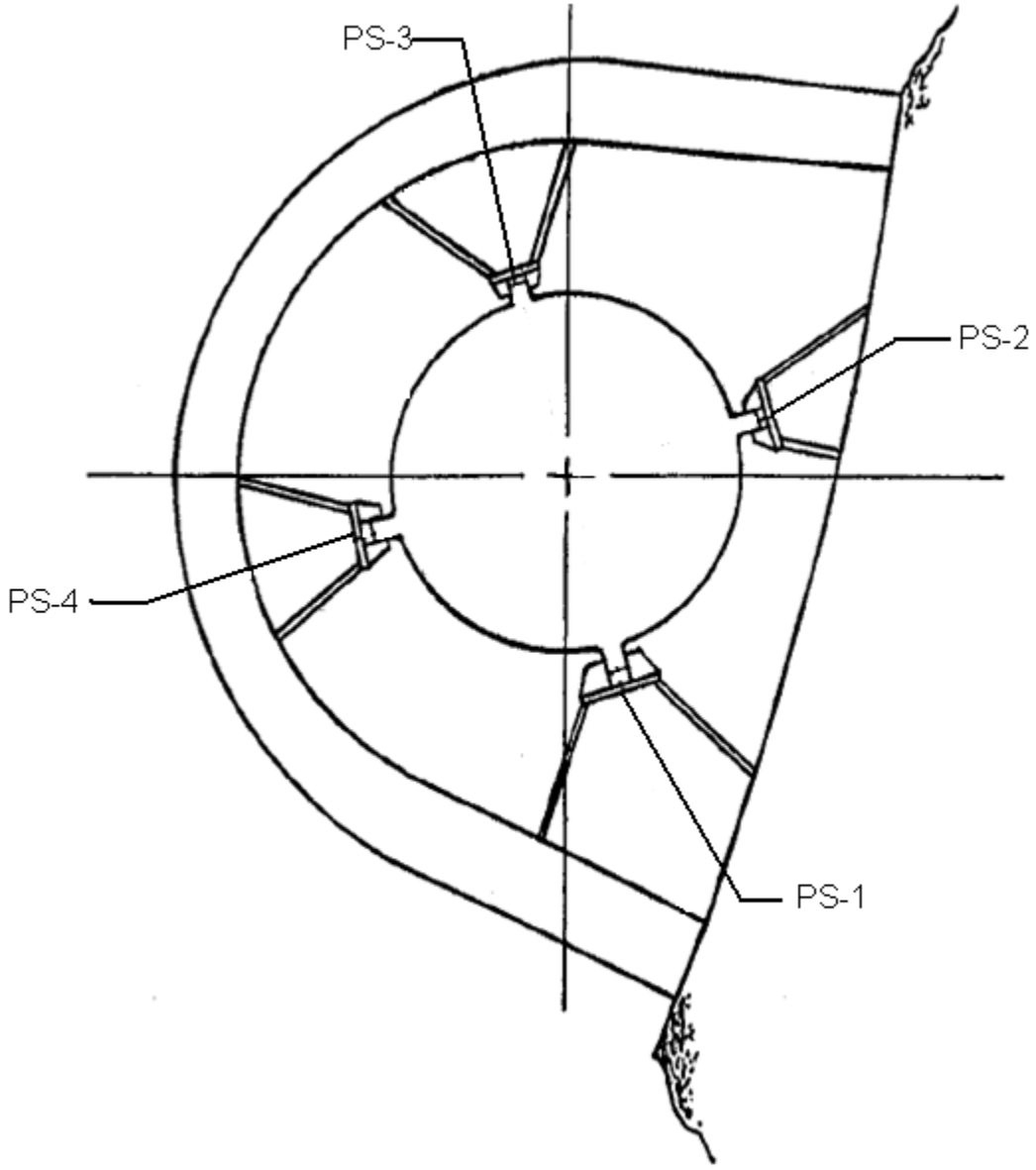

Attachment 17
(Page 26 of 35)

REACTOR COOLANT SYSTEM COMPONENT SUPPORT POST HOT FUNCTIONAL TEST AMBIENT TEMPERATURE <105°F DATA READINGS

Date _____

PRESSURIZER UPPER SUPPORT DATA SHEET

DATE: _____
TIME: _____
INITIALS: _____
SYSTEM TEMP: _____

GAP MEASUREMENTS

GAP NO.	BUMPER IDENTIFICATION			
	PS-1	PS-2	PS-3	PS-4
1				
2				
3				
4				
5				
6				
7				
8				

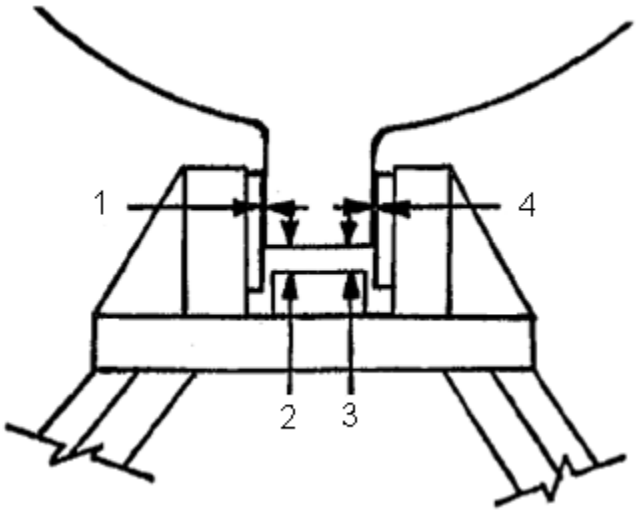

Attachment 17
(Page 27 of 35)

REACTOR COOLANT SYSTEM COMPONENT SUPPORT POST HOT FUNCTIONAL TEST AMBIENT TEMPERATURE <105°F DATA READINGS

Date _____

GENERAL LAYOUT OF STEAM GENERATORS AND REACTOR COOLANT PUMPS

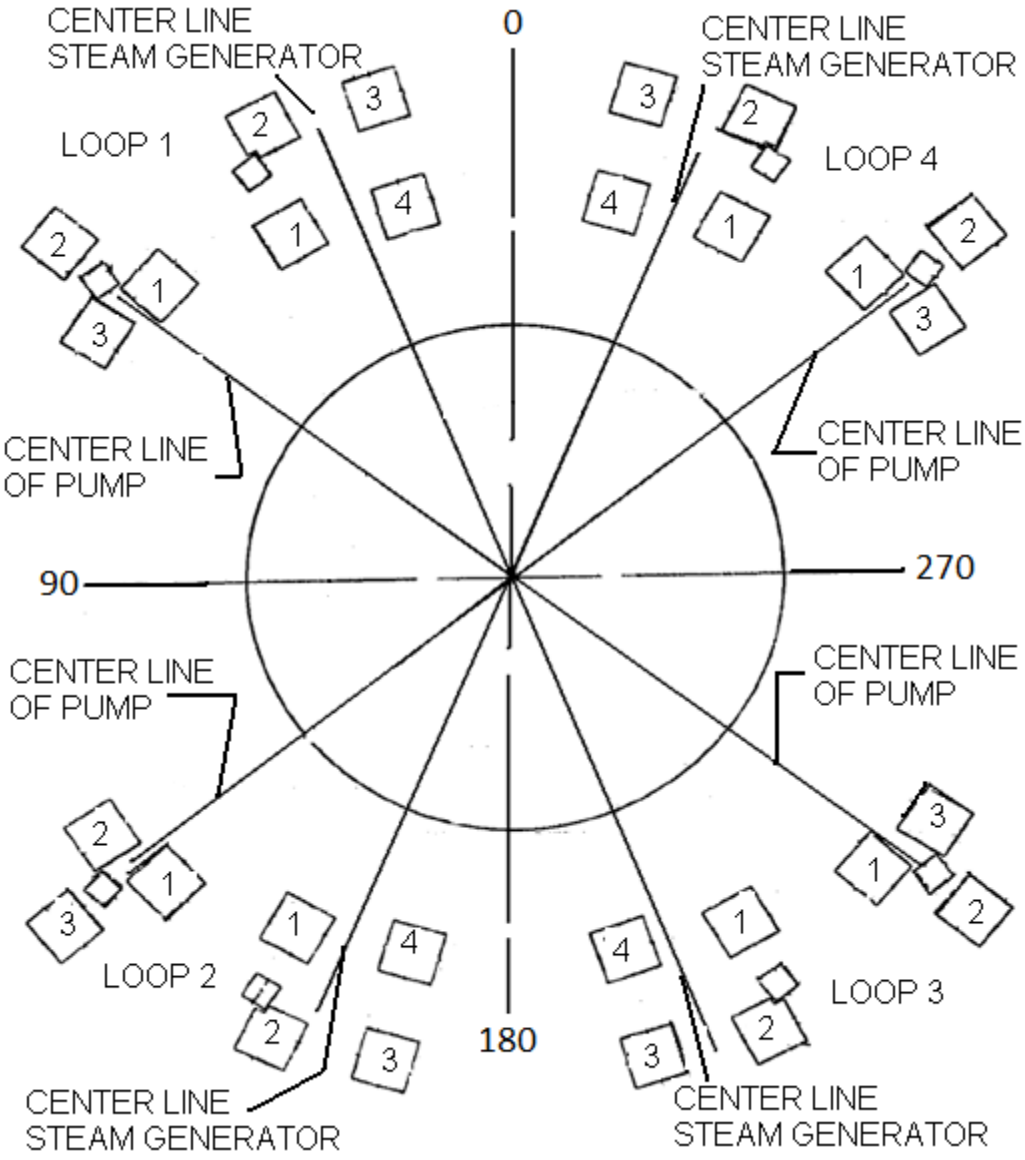

REACTOR COOLANT PUMP COLUMN DATA SHEET

Attachment 17
(Page 28 of 35)

REACTOR COOLANT SYSTEM COMPONENT SUPPORT POST HOT FUNCTIONAL TEST AMBIENT TEMPERATURE <105°F DATA READINGS

Date _____

RCP IDENTIFICATION RCP-1
DATE: _____
TIME: _____
INITIALS: _____
SYSTEM TEMP: _____

GAP NO.		COLUMNS		
		1	2	3
FRONT OR BACK	1			
SIDE	2			

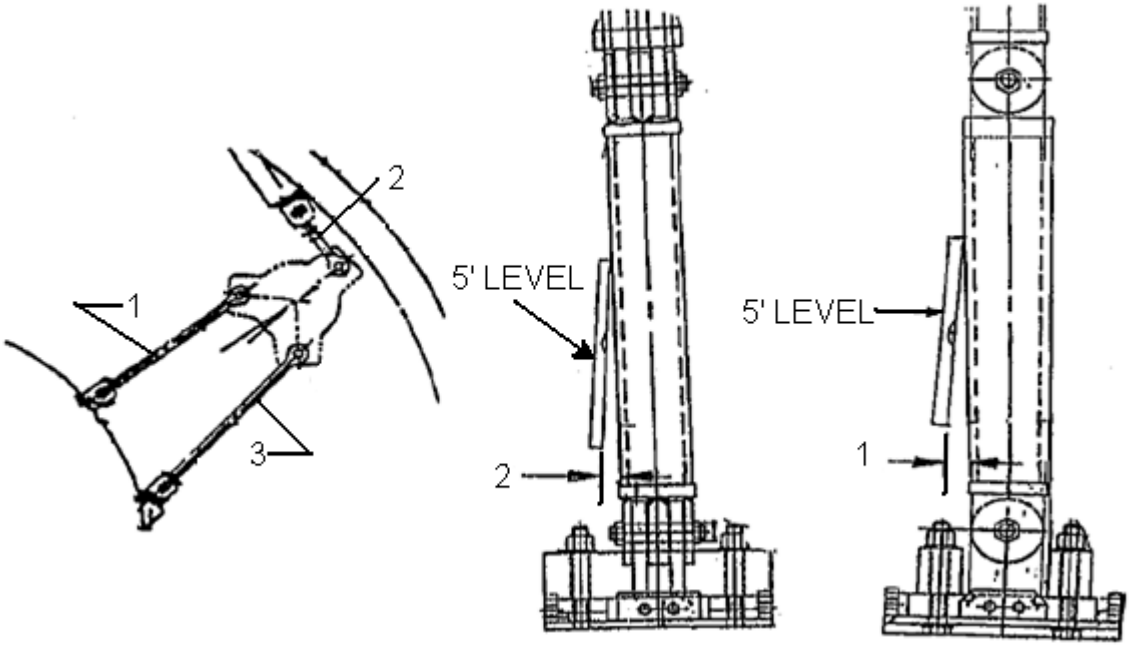

Attachment 17
(Page 29 of 35)

REACTOR COOLANT SYSTEM COMPONENT SUPPORT POST HOT FUNCTIONAL TEST AMBIENT TEMPERATURE <105°F DATA READINGS

Date _____

REACTOR COOLANT PUMP COLUMN DATA SHEET

RCP IDENTIFICATION RCP-2
DATE: _____
TIME: _____
INITIALS: _____
SYSTEM TEMP: _____

GAP NO.		COLUMNS		
		1	2	3
FRONT OR BACK	1			
SIDE	2			

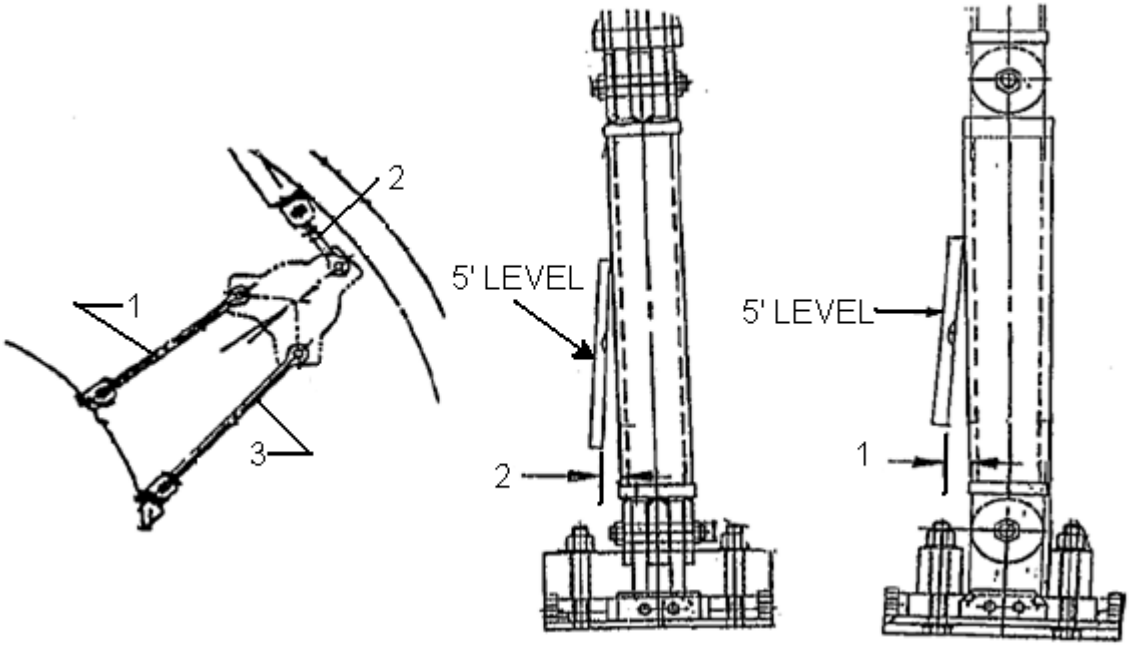

Attachment 17
(Page 30 of 35)

REACTOR COOLANT SYSTEM COMPONENT SUPPORT POST HOT FUNCTIONAL TEST AMBIENT TEMPERATURE <105°F DATA READINGS

Date _____

REACTOR COOLANT PUMP COLUMN DATA SHEET

RCP IDENTIFICATION RCP-3
DATE: _____
TIME: _____
INITIALS: _____
SYSTEM TEMP: _____

GAP NO.		COLUMNS		
		1	2	3
FRONT OR BACK	1			
SIDE	2			

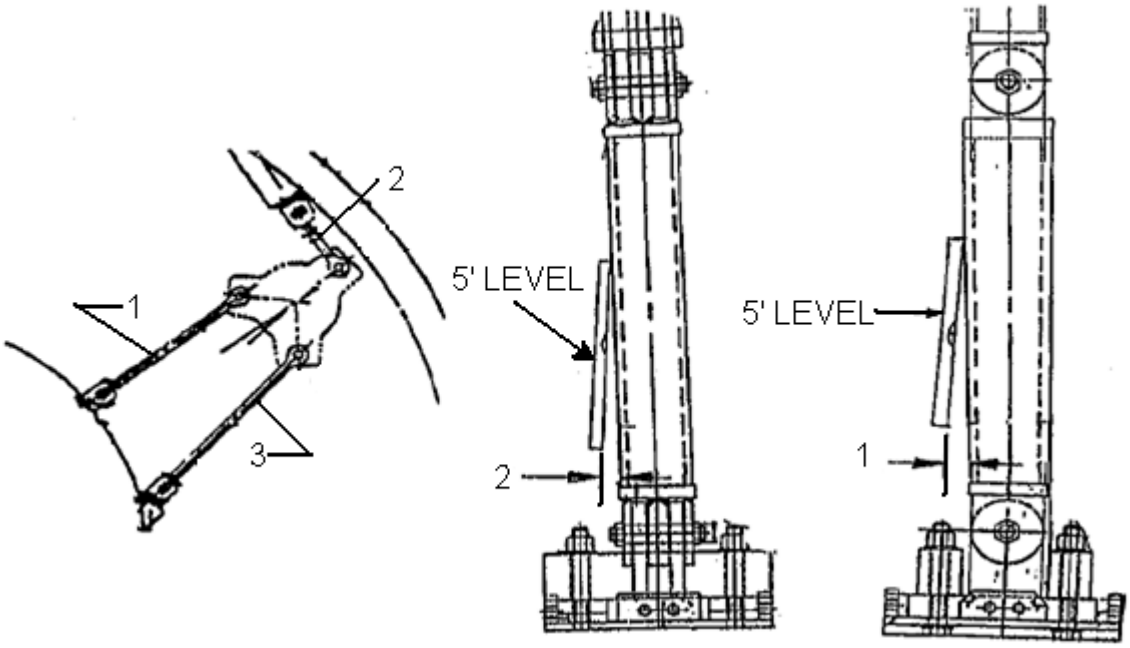

Attachment 17
(Page 31 of 35)

REACTOR COOLANT SYSTEM COMPONENT SUPPORT POST HOT FUNCTIONAL TEST AMBIENT TEMPERATURE <105°F DATA READINGS

Date _____

REACTOR COOLANT PUMP COLUMN DATA SHEET

RCP IDENTIFICATION RCP-4
DATE: _____
TIME: _____
INITIALS: _____
SYSTEM TEMP: _____

GAP NO.		COLUMNS		
		1	2	3
FRONT OR BACK	1			
SIDE	2			

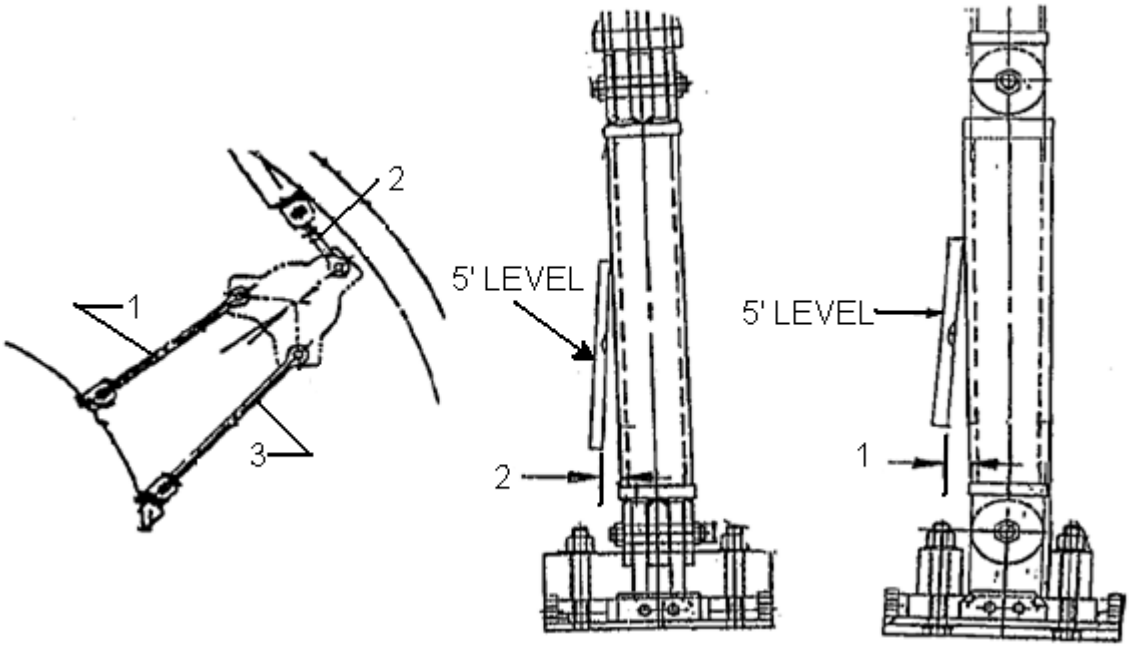

Attachment 17
(Page 32 of 35)

REACTOR COOLANT SYSTEM COMPONENT SUPPORT POST HOT FUNCTIONAL TEST AMBIENT TEMPERATURE <105°F DATA READINGS

Date _____

STEAM GENERATOR COLUMN DATA SHEET

SG IDENTIFICATION SG-1
DATE: _____
TIME: _____
INITIALS: _____
SYSTEM TEMP: _____

GAP NO.		COLUMNS			
		1	2	3	4
FRONT OR BACK	1				
SIDE	2				

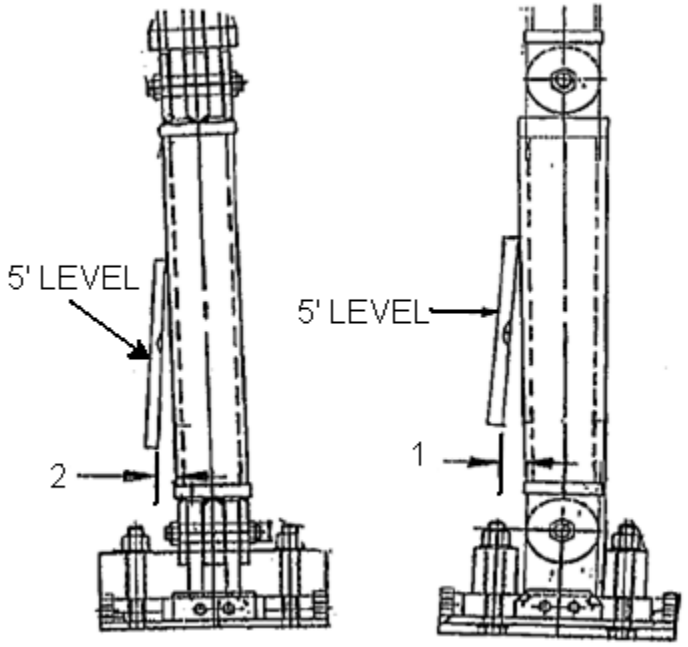

Attachment 17
(Page 33 of 35)

REACTOR COOLANT SYSTEM COMPONENT SUPPORT POST HOT FUNCTIONAL TEST AMBIENT TEMPERATURE <105°F DATA READINGS

Date _____

STEAM GENERATOR COLUMN DATA SHEET

SG IDENTIFICATION SG-2
DATE: _____
TIME: _____
INITIALS: _____
SYSTEM TEMP: _____

GAP NO.		COLUMNS			
		1	2	3	4
FRONT OR BACK	1				
SIDE	2				

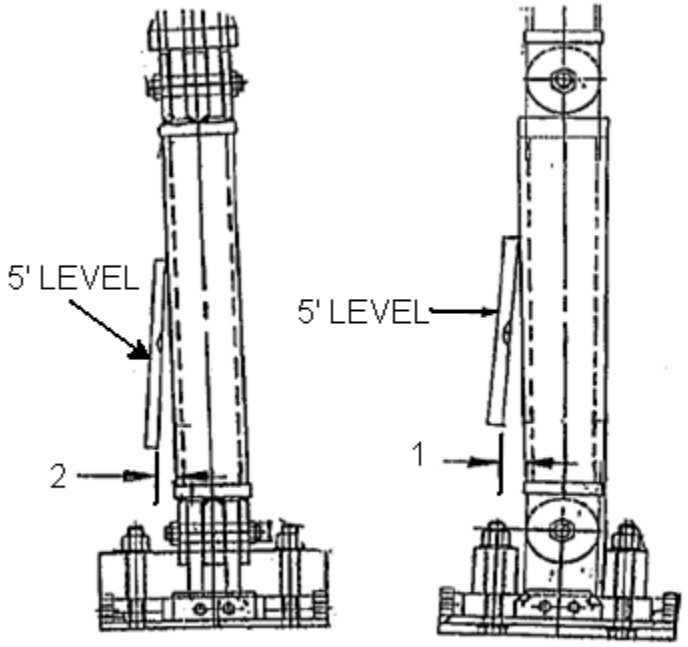

Attachment 17
(Page 34 of 35)

REACTOR COOLANT SYSTEM COMPONENT SUPPORT POST HOT FUNCTIONAL TEST AMBIENT TEMPERATURE <105°F DATA READINGS

Date _____

STEAM GENERATOR COLUMN DATA SHEET

SG IDENTIFICATION SG-3
DATE: _____
TIME: _____
INITIALS: _____
SYSTEM TEMP: _____

GAP NO.		COLUMNS			
		1	2	3	4
FRONT OR BACK	1				
SIDE	2				

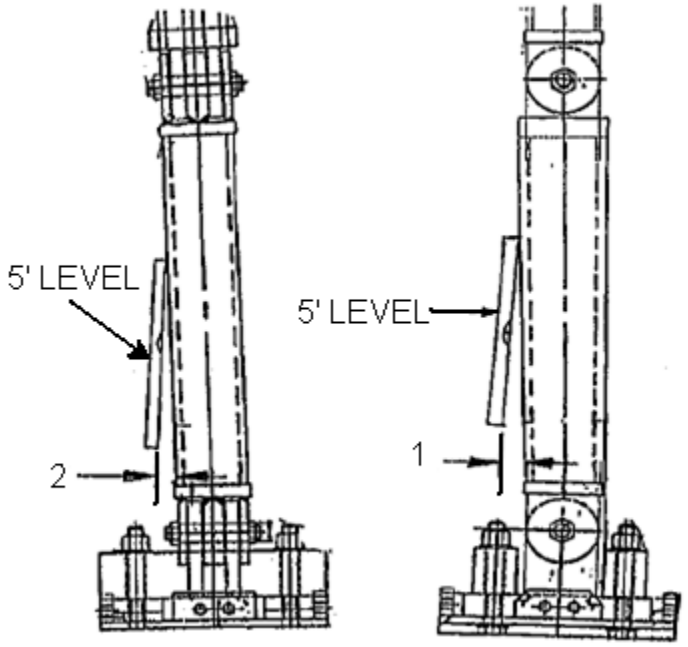

Attachment 17
(Page 35 of 35)

REACTOR COOLANT SYSTEM COMPONENT SUPPORT POST HOT FUNCTIONAL TEST AMBIENT TEMPERATURE <105°F DATA READINGS

Date _____

STEAM GENERATOR COLUMN DATA SHEET

SG IDENTIFICATION SG-4
DATE: _____
TIME: _____
INITIALS: _____
SYSTEM TEMP: _____

GAP NO.		COLUMNS			
		1	2	3	4
FRONT OR BACK	1				
SIDE	2				

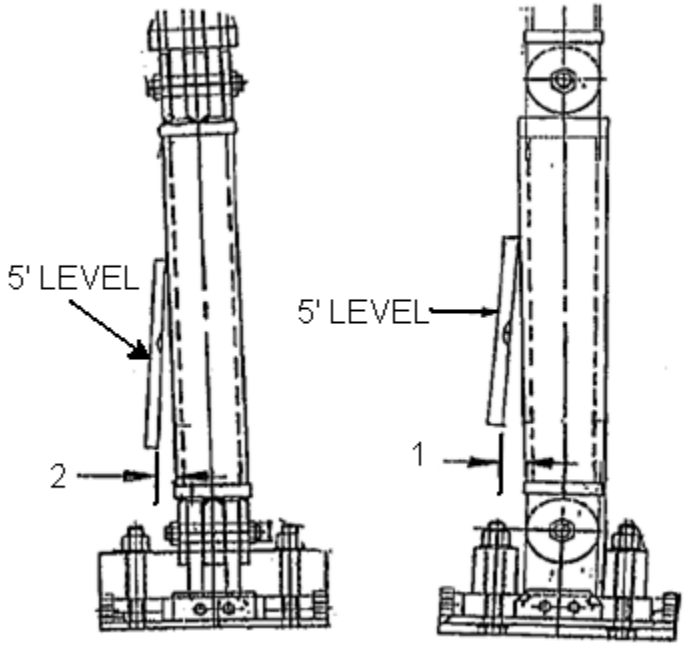

Attachment 18
(Page 1 of 37)

AMBIENT <105°F DATA FOR DYNAMIC SNUBBERS, VARIABLE SPRINGS AND CONSTANT SPRINGS

Date _____

COLD LOAD SETTING (CLS) INCREMENT (INC)

TYPE SUPT.	SUPPORT IDENTIFIER	SYS	LOCATION	ELEV.	SERIAL NO.	TEMP °F	SET POINT / MOVEMENT	SCALE READING	PERFORMER INIT/ DATE	VERIFIER INIT/ DATE	COMMENTS
DS	2-01A-301	001	AZ4	773			CLS 3"/ 1-13/16" (T), 0" (C)				
CS	2-01A-302N	001	AZ5	767	N/A		CLS 8.75 INC / +2.35, - 0 INC				
CS	2-01A-302S	001	AZ5	767	N/A		CLS 8.75 INC / +2.35, - 0 INC				
DS	2-01A-303N	001	AZ4	761			CLS 3" / .011" (T), 2.365" (C)				
DS	2-01A-303S	001	AZ4	761			CLS 5-1/2" / .011" (T), 2.365" (C)				
DS	2-01A-304E	001	SOUTH VLV RM	733			CLS 1-1/2" / 11/16" (T), 13/16" (C)				
DS	2-01A-304W	001	SOUTH VLV RM	733			CLS 1-1/2" / 11/16" (T), 13/16" (C)				
VS	2-01A-305	001	AZ4	737	N/A		CLS 13,973# / 1.94" UP (NOR), 2.09" UP (MAX)				
DS	2-01A-307N	001	AZ5	703			CLS 3-5/8" / 3/8" (T), 0" (C)				
DS	2-01A-307S	001	AZ5	703			CLS 3-3/8" / 3/8" (T), 0" (C)				
DS	2-01A-308	001	SOUTH VLV RM	737			CLS 3" / .22" (T), .28" (C)				
VS	2-01A-309	001	SOUTH VLV RM	740	N/A		CLS 27,083# / +.005" / -.17" (NOR), +.23" / -.18" (MAX)				
DS	2-01A-312	001	SOUTH VLV RM	742			CLS 2-1/2" / 0" (T), 3/8" (C)				
DS	2-01A-313	001	J-R6 SOUTH VLV RM				CLS 3-1/8" / 15/16" (T), 1/8" (C)				
DS	2-01A-317	001	SOUTH VLV RM	769			CLS 2-1/2" / 7/8" (T), 1/8" (C)				
DS	2-01A-340	001	AZ160	771			CLS 3-3/8" / 1/16" (T), 11/16" (C)				
CS	2-01A-342N	001	AZ176	767	N/A		CLS 7.5 INC / +1.83" / -.08"				
CS	2-01A-342S	001	AZ176	767	N/A		CLS 7.5 INC / +1.83" / -.08"				
DS	2-01A-343N	001	AZ175	761			CLS 3-1/2" / 4.03" (T), 1.61" (C)				
DS	2-01A-343S	001	AZ175	761			CLS 3-1/2" / 4.03" (T), 1.61" (C)				
VS	2-01A-344	001	AZ171	744	N/A		CLS 13,438# / +0" / -1/8" (NOR), +0" / -1/8" (MAX)				

Attachment 18
(Page 2 of 37)

AMBIENT <105°F DATA FOR DYNAMIC SNUBBERS, VARIABLE SPRINGS AND CONSTANT SPRINGS

Date _____

TYPE SUPT.	SUPPORT IDENTIFIER	SYS	LOCATION	ELEV.	SERIAL NO.	TEMP °F	SET POINT / MOVEMENT	SCALE READING	PERFORMER INIT/ DATE	VERIFIER INIT/ DATE	COMMENTS
DS	2-01A-348	001	NORTH VLV RM	737			CLS 3.35” / .03” (T), .73” (C)				
DS	2-01A-349	001	NORTH VLV RM	741			CLS 1” / .11” (T), .005” (C)				
DS	2-01A-350	001	NORTH VLV RM	755			CLS 3” / 1.12” (T), .05” (C)				
DS	2-01A-355	001	NORTH VLV RM	769			CLS 2-1/2” / .81” (T), .05” (C)				
DS	2-01A-380	001	AZ196	770			CLS 3-3/4” / 1/16” (T), 3/4” (C)				
DS	2-01A-381	001	AZ183	722			CLS 2-1/2” / 15/16” (T), 1/16” (C)				
CS	2-01A-382N	001	AZ182	770	N/A		CLS 7.5 INC / +1.93” / -.06”				
CS	2-01A-382S	001	AZ182	770	N/A		CLS 7.5 INC / +1.93” / -.06”				
DS	2-01A-383N	001	AZ183	759			CLS 3-1/2” / .03” (T),1.42” (C)				
DS	2-01A-383S	001	AZ183	759			CLS 2-1/2” / .03” (T), 1.42” (C)				
VS	2-01A-384E	001	AZ184	738	N/A		CLS 7,179# / +1/4” / -1/16” (NOR), +3/8” / -1/16” (MAX)				
VS	2-01A-384W	001	AZ184	738	N/A		CLS 7,179# / +1/4” / -1/16” (NOR), +3/8” / -1/16” (MAX)				
VS	2-01A-386	001	NORTH VLV RM	737	N/A		CLS 21,001 / +.04” / -.82” (NOR), +1.5” / -.82” (MAX)				
DS	2-01A-387	001	NORTH VLV RM	737			CLS 3” / .06” (T), 1.33” (C)				
DS	2-01A-389N	001	NORTH VLV RM	734			CLS 3.69” / .66” (T), 1.11” (C)				
DS	2-01A-389S	001	NORTH VLV RM	734			CLS 3.69” / .66” (T), 1.11” (C)				
VS	2-01A-389N	001	NORTH VLV RM	737	N/A		CLS 17,572# / +.03” / -.61” (NOR), +1.12” / -.61” (MAX)				
VS	2-01A-389S	001	NORTH VLV RM	737	N/A		CLS 12,131# / +.03” / -.61” (NOR), +1.12” / -.61” (MAX)				
DS	2-01A-391	001	NORTH VLV RM	741			CLS 2” / 7/32” (T), 1/32” (C)				
DS	2-01A-392	001	NORTH VLV RM	756			CLS 3-3/4” / 1-5/8” (T), 1/16” (C)				
DS	2-01A-397	001	NORTH VLV RM	769			CLS 2-1/2” / .08” (T), 1.81” (C)				

Attachment 18
(Page 3 of 37)

AMBIENT <105°F DATA FOR DYNAMIC SNUBBERS, VARIABLE SPRINGS AND CONSTANT SPRINGS

Date _____

TYPE SUPT.	SUPPORT IDENTIFIER	SYS	LOCATION	ELEV.	SERIAL NO.	TEMP °F	SET POINT / MOVEMENT	SCALE READING	PERFORMER INIT/ DATE	VERIFIER INIT/ DATE	COMMENTS
CS	2-01A-422N	001	AZ357	767	N/A		CLS 9 INC / +1.86” / -.05”				
CS	2-01A-422S	001	AZ357	767	N/A		CLS 9 INC / +1.86” / -.05”				
DS	2-01A-423N	001	AZ357	760			CLS 3-3/4” / 1/16” (T), 1-1/2” (C)				
DS	2-01A-423S	001	AZ357	760			CLS 3-3/4” / 1/16” (T), 1-1/2” (C)				
DS	2-01A-424	001	AZ357	745			CLS 3” / 13/16” (T), 1/16” (C)				
VS	2-01A-425E	001	AZ356	737	N/A		CLS 6,685# / +.15” (NOR), +.38” / -.07” (MAX)				
VS	2-01A-425W	001	AZ356	737	N/A		CLS 6,685# / +.15” (NOR), +.38” / -.07” (MAX)				
VS	2-01A-427	001	SOUTH VLV RM	753	N/A		CLS 17,875# / +.04” / -.79” (NOR), +.85” / -.17” (MAX)				
DS	2-01A-428	001	SOUTH VLV RM	737			CLS 3-1/8” / 7/16” (T), 0” (C)				
DS	2-01A-429N	001	SOUTH VLV RM	732			CLS 3-3/4” / 1/16” (T), 3/16” (C)				
DS	2-01A-429S	001	SOUTH VLV RM	732			CLS 3-3/4” / 1/16” (T), 3/16” (C)				
VS	2-01A-431	001	SOUTH VLV RM	737	N/A		CLS 23,297# / +1/32” / -3/8” (NOR), +1/32” / -3/8” (MAX)				
DS	2-01A-435	001	SOUTH VLV RM	755			CLS 3-7/16" / .06" (T), 1.28" (C)				
DS	2-01A-439	001	SOUTH VLV RM	769			CLS 2-1/2" / 1/16" (T), 1-7/16" (C)				
DS	47A400-16	001	T-T16	737			CLS 11.5” / 0” (T), 11” (C)				
DS	47A400-17	001	N-T16	732			CLS 3” / 8-1/2” (T), 0” (C)				
DS	47A400-18	001	K-T14	722			CLS 3” / 5/16” (T), 0” (C)				
DS	47A400-19	001	K-T13	722			CLS 5” / 0” (T), 3-5/8” (C)				
DS	47A400-20	001	J-T13	718			CLS 4” / 0” (T), 1-5/8” (C)				
DS	47A400-21	001	K-T13	722			CLS 1” / 3-9/16” (T), 0” (C)				
DS	47A400-22T	001	K-T13	722			CLS 4-1/4” / 0” (T), 2” (C)				

Attachment 18
(Page 4 of 37)

AMBIENT <105°F DATA FOR DYNAMIC SNUBBERS, VARIABLE SPRINGS AND CONSTANT SPRINGS

Date _____

TYPE SUPT.	SUPPORT IDENTIFIER	SYS	LOCATION	ELEV.	SERIAL NO.	TEMP °F	SET POINT / MOVEMENT	SCALE READING	PERFORMER INIT/ DATE	VERIFIER INIT/ DATE	COMMENTS
DS	47A400-22B	001	K-T13	722			CLS 3-1/4” / 0” (T), 2” (C)				
DS	47A400-23	001	N-T16	732			CLS 1-5/8” / 8-13/16” (T), 0” (C)				
DS	47A400-24T	001	T-T16	737			CLS 1-1/8” / 10-1/4” (T), 0” (C)				
DS	47A400-24B	001	T-T16	737			CLS 1-1/8” / 10-1/4” (T), 0” (C)				
DS	47A400-25T	001	M-T15	723			CLS 9/16” / 4-13/16” (T), 0” (C)				
DS	47A400-25B	001	M-T15	723			CLS 9/16” / 4-13/16” (T), 0” (C)				
DS	47A400-26	001	J-T12	718			CLS 3-1/2” / 0” (T), 1-1/2” (C)				
DS	47A400-27	001	M-T15	722			CLS 1/2” / 4-13/16” (T), 0” (C)				
DS	47A400-28	001	J-T12	726			CLS 2-1/2”” / 15/16” (T), 0” (C)				
DS	47A400-29	001	J-T12	726			CLS 2” / 1” (T), 0” (C)				
DS	47A400-30T	001	J-T10	718			CLS 4” / 0” (T), 1-13/16+” (C)				
DS	47A400-30B	001	J-T10	718			CLS 4” / 0” (T), 1-13/16” (C)				
CS	01A-2MS-V007N	001	M-T15	727	N/A		CLS 6,238# / 1-3/8” (DOWN)				
CS	01A-2MS-V007S	001	M-T15	727	N/A		CLS 6,238# / 1-3/8” (DOWN)				
CS	01A-2MS-V008N	001	M-T14	727	N/A		CLS 6,960# / 1-7/8” (DOWN)				
CS	01A-2MS-V008S	001	M-T14	727	N/A		CLS 6,960# / 1-7/8” (DOWN)				
CS	01A-2MS-V009N	001	M-T13	727	N/A		CLS 7,242# / 2-1/2” (DOWN)				
CS	01A-2MS-V009S	001	M-T13	727	N/A		CLS 7,242# / 2-1/2” (DOWN)				
CS	01A-2MS-V010E	001	K-T12	727	N/A		CLS 7,135# / 2-5/8” (DOWN)				
CS	01A-2MS-V010W	001	K-T12	727	N/A		CLS 7,135# / 2-5/8” (DOWN)				
VS	01A-2MS-V011E	001	K-T12	725	N/A		CLS 4,615# / 2-9/16” (DOWN)				
VS	01A-2MS-V011W	001	K-T12	725	N/A		CLS 4,615# / 2-9/16” (DOWN)				
VS	01A-2MS-V012E	001	J-T12	725	N/A		CLS 4,781# / 2-1/2” (DOWN)				
VS	01A-2MS-V012W	001	J-T12	725	N/A		CLS 4,781# / 2-1/2” (DOWN)				
CS	01A-2MS-V027E	001	M-T16	727	N/A		CLS 6,580# / 1-1/16” (DOWN)				

Attachment 18
(Page 5 of 37)

AMBIENT <105°F DATA FOR DYNAMIC SNUBBERS, VARIABLE SPRINGS AND CONSTANT SPRINGS

Date _____

TYPE SUPT.	SUPPORT IDENTIFIER	SYS	LOCATION	ELEV.	SERIAL NO.	TEMP °F	SET POINT / MOVEMENT	SCALE READING	PERFORMER INIT/ DATE	VERIFIER INIT/ DATE	COMMENTS
CS	01A-2MS-V027W	001	M-T16	727	N/A		CLS 6,580# / 1-1/16” (DOWN)				
CS	01A-2MS-V028N	001	K-T15	727	N/A		CLS 6,271# / 1-13/16” (DOWN)				
CS	01A-2MS-V028S	001	K-T15	727	N/A		CLS 6,271# / 1-13/16” (DOWN)				
CS	01A-2MS-V029N	001	K-T14	727	N/A		CLS 5,073# / 2-9/16” (DOWN)				
CS	01A-2MS-V029S	001	K-T14	727	N/A		CLS 5,073# / 2-9/16” (DOWN)				
CS	01A-2MS-V030N	001	K-T13	727	N/A		CLS 4,894# / 2-15/16” (DOWN)				
CS	01A-2MS-V030S	001	K-T13	727	N/A		CLS 4,894# / 2-15/16” (DOWN)				
CS	01A-2MS-V031E	001	K-T13	727	N/A		CLS 6,730# / 3” (DOWN)				
CS	01A-2MS-V031W	001	K-T13	727	N/A		CLS 6,730# / 3” (DOWN)				
VS	01A-2MS-V032E	001	J-T13	725	N/A		CLS 7,171 / 2-5/8” (DOWN)				
VS	01A-2MS-V032W	001	J-T13	725	N/A		CLS 7,171 / 2-5/8” (DOWN)				
CS	01A-2MS-V047E	001	M-T16	727	N/A		CLS 7,785# / 1-3/16” (DOWN)				
CS	01A-2MS-V047W	001	M-T16	727	N/A		CLS 7,785# / 1-3/16” (DOWN)				
CS	01A-2MS-V048N	001	K-T15	727	N/A		CLS 7,400# / 2-1/16” (DOWN)				
CS	01A-2MS-V048S	001	K-T15	727	N/A		CLS 7,400# / 2-1/16” (DOWN)				
CS	01A-2MS-V049N	001	K-T14	727	N/A		CLS 4,309# / 2-1/16” (DOWN)				
CS	01A-2MS-V049S	001	K-T14	727	N/A		CLS 4,309# / 2-1/16” (DOWN)				
CS	01A-2MS-V050N	001	K-T14	727	N/A		CLS 3,710# / 3” (DOWN)				
CS	01A-2MS-V050S	001	K-T14	727	N/A		CLS 3,710# / 3” (DOWN)				
CS	01A-2MS-V051E	001	K-T13	727	N/A		CLS 6,181# / 3-1/16” (DOWN)				
CS	01A-2MS-V051W	001	K-T13	727	N/A		CLS 6,181# / 3-1/16” (DOWN)				
VS	01A-2MS-V052E	001	J-T13	725	N/A		CLS 5,396# / 2-5/8” (DOWN)				
VS	01A-2MS-V052W	001	J-T13	725	N/A		CLS 5,396# / 2-5/8” (DOWN)				
CS	01A-2MS-V059N	001	M-T15	727	N/A		CLS 6,363# / 1-1/8” (DOWN)				
CS	01A-2MS-V059S	001	M-T15	727	N/A		CLS 6,363# / 1-1/8” (DOWN)				

Attachment 18
(Page 6 of 37)

AMBIENT <105°F DATA FOR DYNAMIC SNUBBERS, VARIABLE SPRINGS AND CONSTANT SPRINGS

Date _____

TYPE SUPT.	SUPPORT IDENTIFIER	SYS	LOCATION	ELEV.	SERIAL NO.	TEMP °F	SET POINT / MOVEMENT	SCALE READING	PERFORMER INIT/ DATE	VERIFIER INIT/ DATE	COMMENTS
CS	01A-2MS-V060N	001	M-T14	727	N/A		CLS 6,775# / 1-3/4” (DOWN)				
CS	01A-2MS-V060S	001	M-T14	727	N/A		CLS 6,775# / 1-3/4” (DOWN)				
CS	01A-2MS-V061N	001	M-T12	727	N/A		CLS 8,158# / 2-3/16” (DOWN)				
CS	01A-2MS-V061S	001	M-T12	727	N/A		CLS 8,158# / 2-3/16” (DOWN)				
CS	01A-2MS-V062E	001	M-T12	727	N/A		CLS 9,549# / 2-7/16” (DOWN)				
CS	01A-2MS-V062N	001	M-T12	727	N/A		CLS 9,549# / 2-7/16” (DOWN)				
VS	01A-2MS-V063E	001	K-T12	725	N/A		CLS 5,731# / 2-1/2” (DOWN)				
VS	01A-2MS-V063W	001	K-T12	725	N/A		CLS 5,731# / 2-1/2” (DOWN)				
VS	01A-2MS-V064E	001	J-T12	725	N/A		CLS 2,676# / 2-3/8” (DOWN)				
VS	01A-2MS-V064W	001	J-T12	725	N/A		CLS 2,676# / 2-3/8” (DOWN)				
VS	01A-2MS-V065	001	J-T13	727	N/A		CLS 22,564# / 2-5/8” (DOWN)				
VS	01A-2MS-V066	001	J-T12	727	N/A		CLS 28,401# / 2-5/8” (DOWN)				
VS	01A-2MS-V067	001	J-T11	727	N/A		CLS 9,925# / 2-1/4” (DOWN)				
VS	01A-2MS-V068	001	J-T10	727	N/A		CLS 8,977# / 2” (DOWN)				
VS	01A-2MS-V069	001	H-T10	727	N/A		CLS 9,104# / 1-1/2” (DOWN)				
VS	01A-2MS-V070	001	H-T10	753	N/A		CLS 11,165# / 1” (DOWN)				
VS	01A-2MS-V071	001	H-T10	753	N/A		CLS 16,404# / 1/2” (DOWN)				
VS	01A-2MS-V072	001	G-T10	753	N/A		CLS 8,860 / 3/32” (UP)				
VS	01A-2MS-V073	001	F-T10	753	N/A		CLS 8,336# / 1/2” (UP)				
VS	01A-2MS-V074	001	F-T10	753	N/A		CLS 2,317# / 3/4” (UP)				
VS	01A-2MS-V075	001	F-T10	721	N/A		CLS 1,660# / 7/16” (UP)				
VS	01A-2MS-V075	001	F-T10	721	N/A		CLS 1,660# / 7/16” (UP)				
VS	01A-2MS-V076	001	F-T11	725	N/A		CLS 1,792# / 3/16” (UP)				
VS	01A-2MS-V077	001	F-T10	720	N/A		CLS 1,609# / 5/16” (UP)				
VS	01A-2MS-V077	001	F-T10	720	N/A		CLS 1,609# / 5/16” (UP)				

Attachment 18
(Page 7 of 37)

AMBIENT <105°F DATA FOR DYNAMIC SNUBBERS, VARIABLE SPRINGS AND CONSTANT SPRINGS

Date _____

TYPE SUPT.	SUPPORT IDENTIFIER	SYS	LOCATION	ELEV.	SERIAL NO.	TEMP °F	SET POINT / MOVEMENT	SCALE READING	PERFORMER INIT/ DATE	VERIFIER INIT/ DATE	COMMENTS
VS	01A-2MS-V078	001	F-T11	725	N/A		CLS 1,880# / 5/16” (UP)				
VS	01A-2MS-V079	001	G-T10	721	N/A		CLS 1,565# / 1/4” (UP)				
VS	01A-2MS-V079	001	G-T10	721	N/A		CLS 1,565# / 1/4” (UP)				
VS	01A-2MS-V080	001	G-T11	725	N/A		CLS 1,805# / 3/16” (UP)				
VS	01A-2MS-V081	001	G-T10	721	N/A		CLS 1,500# / 1/8” (UP)				
VS	01A-2MS-V081	001	G-T10	721	N/A		CLS 1,500# / 1/8” (UP)				
VS	01A-2MS-V082	001	G-T11	725	N/A		CLS 1,810# / 3/16” (UP)				
VS	01A-2MS-V083	001	G-T10	721	N/A		CLS 1,426# / 1/4” (DN)				
VS	01A-2MS-V083	001	G-T10	721	N/A		CLS 1,426# / 1/4” (DN)				
VS	01A-2MS-V084	001	G-T11	724	N/A		CLS 1,719# / 3/16” (UP)				
VS	01A-2MS-V085	001	G-T10	721	N/A		CLS 1,290# / 3/8” (DN)				
VS	01A-2MS-V085	001	G-T10	721	N/A		CLS 1,290# / 3/8” (DN)				
VS	01A-2MS-V086	001	G-T11	727	N/A		CLS 1,928# / 3/16” (UP)				
VS	01A-2MS-V087	001	G-T10	721	N/A		CLS 1,290# / 3/8” (DN)				
VS	01A-2MS-V087	001	G-T10	721	N/A		CLS 1,290# / 3/8” (DN)				
VS	01A-2MS-V088	001	G-T11	727	N/A		CLS 1,933# / 3/16” (UP)				
VS	01A-2MS-V089	001	G-T10	721	N/A		CLS 1,261# / 3/8” (DN)				
VS	01A-2MS-V089	001	G-T10	721	N/A		CLS 1,261# / 3/8” (DN)				
VS	01A-2MS-V090	001	G-T11	724	N/A		CLS 1,733# / 3/16” (UP)				
VS	01A-2MS-V091	001	H-T10	721	N/A		CLS 1,263# / 1/2” (DN)				
VS	01A-2MS-V091	001	H-T10	721	N/A		CLS 1,263# / 1/2” (DN)				
VS	01A-2MS-V092	001	H-T11	724	N/A		CLS 1,710# / 3/16” (UP)				
VS	01A-2MS-V093	001	H-T10	721	N/A		CLS 1,081# / 5/8” (DN)				
VS	01A-2MS-V093	001	H-T10	721	N/A		CLS 1,081# / 5/8” (DN)				
VS	01A-2MS-V094	001	H-T11	727	N/A		CLS 2,135# / 3/16” (UP)				

Attachment 18
(Page 8 of 37)

AMBIENT <105°F DATA FOR DYNAMIC SNUBBERS, VARIABLE SPRINGS AND CONSTANT SPRINGS

Date _____

TYPE SUPT.	SUPPORT IDENTIFIER	SYS	LOCATION	ELEV.	SERIAL NO.	TEMP °F	SET POINT / MOVEMENT	SCALE READING	PERFORMER INIT/ DATE	VERIFIER INIT/ DATE	COMMENTS
VS	01A-2MS-V095	001	H-T10	721	N/A		CLS 1,196# / 3/4” (DN)				
VS	01A-2MS-V095	001	H-T10	721	N/A		CLS 1,196# / 3/4” (DN)				
VS	01A-2MS-V096	001	H-T11	727	N/A		CLS 2,140# / 3/16” (DN)				
VS	01A-2MS-V097	001	H-T10	720	N/A		CLS 1,187# / 7/8” (DN)				
VS	01A-2MS-V097	001	H-T10	720	N/A		CLS 1,187# / 7/8” (DN)				
VS	01A-2MS-V098	001	H-T11	724	N/A		CLS 1,717# / 3/16” (UP)				

Attachment 18
(Page 9 of 37)

AMBIENT <105°F DATA FOR DYNAMIC SNUBBERS, VARIABLE SPRINGS AND CONSTANT SPRINGS

Date _____

TYPE SUPT	SUPPORT IDENTIFIER	SYS	LOCATION	ELEV	SERIAL NO.	TEMP °F	SET POINT / MOVEMENT	SCALE READING	PERFORMER INIT/ DATE	VERIFIER INIT/ DATE	COMMENTS
(STEP 6.9[2.2]) During Performance of 2-PTI-003A-03											
Main Feedwater Line to Steam Generator #1											
DS	2-03A-205	003	U-A15	731			CLS 2-5/16” / 1-7/16” (T), 0 (C)				
Main Feedwater Line to Steam Generator #2											
DS	2-03A-244	003	AZ172	731			CLS 3-1/2” / 1-1/4” (T), 1/4” (C)				
DS	2-03A-248	003	AZ165	731			CLS 4” / 1/16” (T), 1-1/8” (C)				
Main Feedwater Line to Steam Generator #3											
DS	2-03A-285	003	CRANE WALL AZ188	731			CLS 2-1/2” / 2” (T), 0” (C)				
DS	2-03A-289	003	AZ185	731			CLS 5” / 0 (T), 3-15/16” (C)				
Main Feedwater Line to Steam Generator #4											
DS	2-03A-320	003	CRANE WALL AZ352	729			CLS 3” / 0” (T), 2-3/16” (C)				
DS	2-03A-321	003	CRANE WALL AZ352	731			CLS 3” / 7/8” (T), 1/16” (C)				
DS	2-03A-323	003	U-A14	731			CLS 2-3/16” / 1-5/8” (T), 0” (C)				
DS	2-03A-328	003	U-A15	731			CLS 3” / 3” (T), 0” (C)				

Attachment 18
(Page 10 of 37)

AMBIENT <105°F DATA FOR DYNAMIC SNUBBERS, VARIABLE SPRINGS AND CONSTANT SPRINGS

Date _____

TYPE SUPT	SUPPORT IDENTIFIER	SYS	LOCATION	ELEV	SERIAL NO.	TEMP °F	SET POINT / MOVEMENT	SCALE READING	PERFORMER INIT/ DATE	VERIFIER INIT/ DATE	COMMENTS
(STEP 6.9[2.3]) During Performance of 2-PTI-003A-03											
Main Feedwater Bypass Line to Steam Generator #1											
DS	2-03A-369	003	AZ35	759			CLS 3-1/8” / 0” (T), 1-1/16” (C)				
DS	2-03A-370	003	AZ35	759			CLS 3.075” / . 72” (T), 1.149” (C)				
DS	2-03A-374E	003	S VLV RM U-6	730			CLS 1-11/16” / .63” (T), .04” (C)				
DS	2-03A-374W	003	S VLV RM U-6	730			CLS 1-11/16” / .63” (T), .04” (C)				
DS	2-03A-377	003	S VLV RM U-A15	730			CLS 2-1/4” / .03” (T), .57” (C)				
VS	2-03A-377	003	S VLV RM U-A15	730	N/A		CLS 2,431 / +.04” / -.55” (NOR), +.11” /- .62” (MAX)				
VS	2-03A-378	003	AZ35	759	N/A		CLS 1-11/16”” / .632” (T), .04” (C)				
Main Feedwater Bypass Line to Steam Generator #2											
VS	2-03A-408	003	AZ160	759	N/A		CLS 913 / 1” (UP)				
DS	2-03A-411	003	AZ120	759			CLS 3-7/16” / 0” (T), 13/16” (C)				
DS	2-03A-423	003	N VLV RM AB X-6	735			CLS 3-1/4” / .05” (T), .81” (C)				
DS	2-03A-426	003	N VLV RM AB A-8	730			CLS 3” ±1/4” / .08” (T), .16” (C)				
DS	47A401-8-20T	003	AZ163	758			CLS 2” / 1/16” (T), 9/16” (C)				
DS	47A401-8-20B	003	AZ163	758			CLS 2” / 1/16” (T), 9/16” (C)				

Attachment 18
(Page 11 of 37)

AMBIENT <105°F DATA FOR DYNAMIC SNUBBERS, VARIABLE SPRINGS AND CONSTANT SPRINGS

Date _____

TYPE SUPT	SUPPORT IDENTIFIER	SYS	LOCATION	ELEV	SERIAL NO.	TEMP °F	SET POINT / MOVEMENT	SCALE READING	PERFORMER INIT/ DATE	VERIFIER INIT/ DATE	COMMENTS
(STEP 6.9[2.3]) During Performance of 2-PTI-003A-03											
Main Feedwater Bypass Line to Steam Generator #3											
DS	2-03A-455	003	AZ199	759			CLS 3-1/2” / 0” (T), 1-3/16” (C)				
DS	2-03A-468	003	AZ182	730			CLS 2-1/2” / 11/16” (T), 0” (C)				
VS	2-47A401-8-28	003	AZ210	759	N/A		CLS 988 / +1-5/16” / 0” (NOR), 1-15/16” / -5/8” (MAX)				
DS	2-47A401-8-29T	003	AZ210	759			CLS 2-1/2” / 1-1/16” (T), 1/16” (C)				
DS	2-47A401-8-29B	003	AZ210	759			CLS 2-1/2” / 1-1/16” (T), 1/16” (C)				
Main Feedwater Bypass Line to Steam Generator #4											
DS	2-03A-480	003	AZ350	761			CLS 4-1/4” / 1/8” (T), 1-9/16” (C)				
VS	2-03A-481	003	AZ350	759	N/A		CLS 397# / +1” / -1/16” (NOR), +1” / -1/16” (MAX)				
DS	2-03A-482T	003	AZ350	759			CLS 2-1/4” / 9/16” (T), 0” (C)				
DS	2-03A-482B	003	AZ350	759			CLS 2-1/4” / 9/16” (T), 0” (C)				
DS	2-03A-483	003	AZ280	759			CLS 3-5/8” / 1/16” (T), 1-1/8” (C)				
DS	2-03A-485	003	AZ350	759			CLS 2-1/2” / .16” (T), .59” (C)				
DS	2-03A-497	003	S VLV RM AZ6	730			CLS 3-1/8” / 1/4” (T), 1/32” (C)				
DS	2-03A-503	003	S VLV RM AZ18	739			CLS 2-1/2” / 1/8” (T), 1/16” (C)				
DS	47A401-8-21E	003	AZ351	739			CLS 2-11/16” / 5/16” (T), 11/16” (C)				

Attachment 18
(Page 12 of 37)

AMBIENT <105°F DATA FOR DYNAMIC SNUBBERS, VARIABLE SPRINGS AND CONSTANT SPRINGS

Date _____

TYPE SUPT	SUPPORT IDENTIFIER	SYS	LOCATION	ELEV	SERIAL NO.	TEMP °F	SET POINT / MOVEMENT	SCALE READING	PERFORMER INIT/ DATE	VERIFIER INIT/ DATE	COMMENTS
DS	47A401-8-21W	003	AZ351	739			CLS 2-11/16” / 5/16” (T), 11/16” (C)				
DS	2-47A427-3-57T	003	AZ331	759			CLS 1-7/8” / 0” (T), 5/8” (C)				
DS	2-47A427-3-57B	003	AZ331	759			CLS 1-7/8” / 0” (T), 5/8” (C)				

Attachment 18
(Page 13 of 37)

AMBIENT <105°F DATA FOR DYNAMIC SNUBBERS, VARIABLE SPRINGS AND CONSTANT SPRINGS

Date _____

TYPE SUPT	SUPPORT IDENTIFIER	SYS	LOCATION	ELEV	SERIAL NO.	TEMP °F	SET POINT / MOVEMENT	SCALE READING	PERFORMER INIT/ DATE	VERIFIER INIT/ DATE	COMMENTS
(STEP 6.9[2.4]) During Performance of 2-PTI-003A-03											
Main Feedwater Warm Up Line for Steam Generator #1											
DS	2-03A-527	003	S VLV RM A6-M	730			CLS 7/16” / 1-5/16”” (T), -1/16” (C)				
Main Feedwater Warm Up Line for Steam Generator #3											
DS	2-03A-563	003	N VLV RM 6-A	730			CLS 4-5/8” / 1/8” (T), 4-3/16” (C)				
Main Feedwater Warm Up Line for Steam Generator #4											
DS	2-03A-582	003	S VLV RM AZ350	730			CLS 5-1/8” / 0” (T), 4-1/16” (C)				
DS	2-03A-584	003	S VLV RM 6-M	730			CLS 3” / .06” (T), 1.99” (C)				
DS	2-47A401-9-15	003	S VLV RM AZ350	730			CLS 3” / 1/16”” (T), 1-13/16” (C)				

Attachment 18
(Page 14 of 37)

AMBIENT <105°F DATA FOR DYNAMIC SNUBBERS, VARIABLE SPRINGS AND CONSTANT SPRINGS

Date _____

TYPE SUPT	SUPPORT IDENTIFIER	SYS	LOCATION	ELEV	SERIAL NO.	TEMP °F	SET POINT / MOVEMENT	SCALE READING	PERFORMER INIT/ DATE	VERIFIER INIT/ DATE	COMMENTS
(STEP 6.9[2.5]) During Performance of 2-PTI-003B-05 Section 6.10 (TD) and Section 6.14 (MD)											
Auxiliary Feedwater From the Motor Driven Auxiliary Feed Pump 2A-A to Steam Generator #1											
VS	03B-2AFW-V047	003	T-A15 AB	702	N/A		CLS 724 /+1/16” UP (NOR), + 1/16” UP (MAX)				
DS	03B-2AFW-R155	003	S VLV RM U-6	746			CLS 1-1/2” / 3/8” (T), 1-7/16” (C)				
Auxiliary Feedwater From the Motor Driven Auxiliary Feed Pump 2A-A to Steam Generator #2											
VS	03B-2AFW-V178N	003	AZ301	750	N/A		CLS 124 / +3/8” / -1/8” (NOR), +13/16” / -9/16” (MAX)				
VS	03B-2AFW-V178S	003	AZ301	750	N/A		CLS 71 / +3/8” / -1/8” (NOR), +13/16” / -9/16” (MAX)				
VS	2-03B-80	003	AZ301	744	N/A		CLS 282# / 1/4” (UP)				
DS	2-03B-71T	003	AZ143	740			CLS 1-1/2” / .47” (T), .69” (C)				
DS	2-03B-71B	003	AZ143	740			CLS 1-1/2” / .47” (T), .69” (C)				
DS	2-03B-82	003	AZ143	727			CLS 2-1/2” / 0” (T), 1/4” (C)				
VS	2-03B-82	003	AZ143	727	N/A		CLS 612# / +0” / -1/4” (NOR), +0” / -1/4” (MAX)				
DS	2-03A-400	003	AZ144	744			CLS 2” / .67”(T), .0” (C)				
DS	2-03A-401	003	AZ143	744			CLS 2” / .85” (T), 0” (C)				
DS	2-03A-402	003	AZ143	753			CLS 3” / 0” (T), .20” (C)				
DS	2-03A-404	003	AZ144	753			CLS 4-1/2” / 0” (T), .88” (C)				
DS	2-03A-415	003	AZ144	752			CLS 3” / .73” (T), 0” (C)				

Attachment 18
(Page 15 of 37)

AMBIENT <105°F DATA FOR DYNAMIC SNUBBERS, VARIABLE SPRINGS AND CONSTANT SPRINGS

Date _____

TYPE SUPT	SUPPORT IDENTIFIER	SYS	LOCATION	ELEV	SERIAL NO.	TEMP °F	SET POINT / MOVEMENT	SCALE READING	PERFORMER INIT/ DATE	VERIFIER INIT/ DATE	COMMENTS
(STEP 6.9[2.5]) During Performance of 2-PTI-003B-05 Section 6.10 (TD) and Section 6.14 (MD)											
Auxiliary Feedwater From the Motor Driven Auxiliary Feed Pump 2B-B to Steam Generator #3											
DS	2-03B-35	003	AZ301	743			CLS 2” / 5/8” (T), 1/8” (C)				
VS	47A427-6-31	003	AZ301	743	N/A		CLS 343# / +5/8” / -1/8” (NOR), +5/8” / -1/16” (MAX)				
VS	47A427-6-32	003	AZ216	730	N/A		CLS 895# / +1/8” / -9/16” (NOR), +1/16” / -9/16” (MAX)				
DS	2-03B-37	003	AZ215	741			CLS 2” / 1/8” (T), 9/16” (C)				
DS	2-03B-39	003	AZ216	730			CLS 3-1/4” / .39” (T), 0” (C)				
DS	2-03A-445	003	AZ216	753			CLS 2-3/4” / 9/16” (T), 1/16” (C)				
DS	2-03A-449	003	AZ216	754			CLS 2-11/16” / 11/16” (T), 0” (C)				
Auxiliary Feedwater From the Motor Driven Auxiliary Feed Pump 2B-B to Steam Generator #4											
VS	03B-2AFW-V177	003	U-A14 AB	753	N/A		CLS 1,247 / +3/8” / -1/16” (NOR), +3/8” / -1/16” (MAX)				
DS	03B-2AFW-R242	003	U-A14 AB	745			CLS 2-11/16” / 1/16” (T), 3/8” (C)				
DS	03B-2AFW-R171E	003	U-A14 AB	748			CLS 1-1/4” / 1/4” (T), 1/32” (C)				
DS	03B-2AFW-R171W	003	U-A14 AB	748			CLS 1-1/4” / 1/4” (T), 1/32” (C)				

Attachment 18
(Page 16 of 37)

AMBIENT <105°F DATA FOR DYNAMIC SNUBBERS, VARIABLE SPRINGS AND CONSTANT SPRINGS

Date _____

TYPE SUPT	SUPPORT IDENTIFIER	SYS	LOCATION	ELEV	SERIAL NO.	TEMP °F	SET POINT / MOVEMENT	SCALE READING	PERFORMER INIT/ DATE	VERIFIER INIT/ DATE	COMMENTS
VS	2-62A-240	062	AZ110	728	N/A		CLS 813# / +1/16” / -1/16” (NOR), +1/16” / -1/16” (MAX)				
DS	2-62A-247	062	AZ81	704			CLS 4-1/4” / 1/16” (T), 11/16” (C)				
DS	2-62A-250	062	AZ54	709			CLS 1-1/4” / .44” (T), .02” (C)				
VS	2-62A-252	062	AZ54	714	N/A		CLS 510# / +1/6” / -0” (NOR), +1/16” / 0” (MAX)				
DS	2-62A-254	062	AZ50	706			CLS 1-1/8” / 1/16” (T), 1/8” (C)				
DS	2-62A-256N	062	AZ51	704			CLS 2-1/2” / .01” (T), .1” (C)				
DS	2-62A-256S	062	AZ51	704			CLS 2-1/2” / .01” (T), .1” (C)				
DS	2-62A-256V	062	AZ57	704			CLS 2” / .15” (T), .01” (C)				
VS	2-62A-258	062	AZ48	713	N/A		CLS 90# / + 3/16” / -0” (NOR), +3/16” / -0” (MAX)				
DS	2-62A-262	062	AZ47	706			CLS 1-3/16” / 1/8 (T), 1/4” (C)				
VS	2-62A-266	062	AZ46	714	N/A		CLS 60# / 1/64” (NOR), 1/64” (MAX)				
DS	2-62A-269	062	AZ46	706			CLS 2” / 1/16” (T), 1/4” (C)				
DS	2-62A-271E	062	AZ45	704			CLS 1-1/8” / 1/8” (T), 1/16” (C)				
DS	2-62A-271W	062	AZ45	704			CLS 1-1/8” / 1/8” (T), 1/16” (C)				
VS	2-62A-290	062	AZ215	705	N/A		CLS 1,114# / 1.07” (UP)				
DS	2-62A-291	062	AZ215	711			CLS 2-3/4” / 0” (T), 2-1/8” (C)				
DS	2-62A-294	062	AZ215	727			CLS 2-1/6” / 1/2” (T), 5/8” (C)				
DS	2-62A-319	062	AZ128	716			CLS 1” / 1/16” (T), 1/16” (C)				
DS	2-62A-320	062	AZ107	723			CLS 1” / 11/16” (T), 0” (C)				
CS	2-62A-346	062	AZ103	732	N/A		CLS 515# / 2-3/8”(UP)				
DS	2-62A-357	062	AZ343	727			CLS 3/4” / 2-13/16 ” (T), 0” (C)				

Attachment 18
(Page 17 of 37)

AMBIENT <105°F DATA FOR DYNAMIC SNUBBERS, VARIABLE SPRINGS AND CONSTANT SPRINGS

Date _____

TYPE SUPT	SUPPORT IDENTIFIER	SYS	LOCATION	ELEV	SERIAL NO.	TEMP °F	SET POINT / MOVEMENT	SCALE READING	PERFORMER INIT/ DATE	VERIFIER INIT/ DATE	COMMENTS
DS	2-62A-358	062	AZ328	727			CLS 1/2” (+1/4”, -0”) / 3-5/8” (T), 1/16” (C)				
DS	2-62A-360	062	AZ322	727			CLS 3-3/4” / 1/2” (T), 2-7/16” (C)				
DS	2-62A-362	062	AZ322	727			CLS 2.19” / 1/8” (T), 3/8” (C)				
DS	2-62A-363	062	AZ321	726			CLS 1” / 2-1/8” (T), 0” (C)				
DS	2-62A-366	062	AZ318	727			CLS 1-1/8” / 1-13/16” (T), 1/8” (C)				
DS	2-62A-369	062	AZ128	727			CLS 1-7/8” / 0” (T), 1/2” (C)				
DS	2-62A-371	062	AZ128	728			CLS 7/8” / 1/4” (T), 0” (C)				
CS	2-62A-375	062	AZ103	734	N/A		CLS 429# / 3/32” (DOWN)				
DS	2-62A-377	062	AZ95	730			CLS 2-3/4” / 1/8” (T), 1-7/16” (C)				
DS	2-62A-382	062	AZ48	727			CLS 1-1/4” / 1-9/16” (T), 1/8” (C)				
DS	2-62A-463	062	AZ225	723			CLS 1.81” / .01” (T), 1.32” (C)				
VS	2-62A-530	062	AZ45	705	N/A		CLS 568# / +0” / -.03” (NOR), +.02” / -.05” (MAX)				
DS	2-62A-531	062	AZ44	712			CLS 3-1/2” / 1/16” (T), 5/8” (C)				
VS	2-62A-532	062	AZ52	706	N/A		CLS 460# / +1/16” / -1/16” (NOR), +1/16” / -1/16” (MAX)				
DS	2-62A-533	062	AZ50	706			CLS 5/8” / 3/16” (T), 1/16” (C)				
VS	2-62A-535	062	AZ48	705	N/A		CLS 589# / 1/8” (DOWN)				
DS	2-62A-536	062	AZ46	712			CLS 2-1/4” / 1/16” (T), 5/8” (C)				
DS	2-62A-557	062	AZ43	727			CLS 3-3/16” (+1/16”, 3/16”) / 7/16” (T), 2-3/4” (C)				
DS	2-62A-559	062	AZ43	727			CLS 3” / 1/4” (T), 1-1/2” (C)				
DS	2-62A-561	062	AZ43	727			CLS 2” / 15/16” (T), 5/16” (C)				

Attachment 18
(Page 18 of 37)

AMBIENT <105°F DATA FOR DYNAMIC SNUBBERS, VARIABLE SPRINGS AND CONSTANT SPRINGS

Date _____

TYPE SUPT	SUPPORT IDENTIFIER	SYS	LOCATION	ELEV	SERIAL NO.	TEMP °F	SET POINT / MOVEMENT	SCALE READING	PERFORMER INIT/ DATE	VERIFIER INIT/ DATE	COMMENTS
VS	2-62A-562	062	AZ43	727	N/A		CLS 422 / 1/4” (UP)				
DS	2-62A-563	062	AZ43	727			CLS 1-1/2” / 13/16” (T), 0” (C)				
VS	2-62A-584	062	AZ178	730	N/A		CLS 35# / 3/8” (UP)				
DS	2-62A-589	062	AZ150	729			CLS 2-1/2” / .85” (T), .03” (C)				
VS	2-62A-621	062	AZ302	716	N/A		CLS 117/ +.02”/ -.39” (NOR) +.03”/ -.41” (MAX)				
DS	2-62A-624	062	AZ44	706			CLS 2-5/8” / 1/16” (T), 1/16" (C)				
DS	2-62A-625	062	AZ57	706			CLS 1-7/8” / 3/16” (T), 1/16” (C)				
DS	2-62A-630	062	AZ150	729			CLS 2” / 0” (T), 3/4” (C)				
VS	2-62A-637	062	AZ110	719	N/A		CLS 112# / +.09" / -0" (NOR), +.09" / 0" (MAX)				
DS	2-62A-802	062	AZ200	719			CLS 2-1/4” / 1-1/8” (T), 0” (C)				
DS	2-62A-808	062	AZ210	726			CLS 3-1/8” / 1/16” (T), 2-3/16” (C)				
DS	2-62A-809	062	AZ210	725			CLS 3-1/4” / .02” (T), 2.07” (C)				
DS	2-62A-810	062	AZ208	725			CLS 3/4” / 2-3/4” (T), 0” (C)				
DS	2-68-365	062	AZ220	704			CLS 1-1/4” / 2-13/16” (T), 0” (C)				
DS	47A406-12-79N	062	AZ48	706			CLS 2” /1/16” (T), 1/16” (C)				
DS	47A406-12-79S	062	AZ48	706			CLS 2” / 1/16” (T), 1/16” (C)				
DS	47A406-12-79W	062	AZ48	706			CLS 2” / 3/16” (T), 1/8” (C)				
DS	47A406-12-82	062	AZ43	705			CLS 2-1/8” / 1/16” (T), 3/16” (C)				
DS	2-47A406-12-89	062	AZ48	705			CLS 1” / .02” (T), .03” (C)				
DS	2-47A406-12-93N	062	AZ44	712			CLS 2-5/8” / 1/16” (T), 1/4” (C)				
DS	2-47A406-12-93S	062	AZ44	712			CLS 2-5/8” / 1/16” (T), 1/4” (C)				
DS	2-47A406-12-94E	062	AZ44	712			CLS 4-1/8” / 1/16” (T), -3/16” (C)				
DS	2-47A406-12-94W	062	AZ44	712			CLS 4-1/8” / 1/16” (T), -3/16” (C)				

Attachment 18
(Page 19 of 37)

AMBIENT <105°F DATA FOR DYNAMIC SNUBBERS, VARIABLE SPRINGS AND CONSTANT SPRINGS

Date _____

TYPE SUPT	SUPPORT IDENTIFIER	SYS	LOCATION	ELEV	SERIAL NO.	TEMP °F	SET POINT / MOVEMENT	SCALE READING	PERFORMER INIT/ DATE	VERIFIER INIT/ DATE	COMMENTS
DS	2-47A406-12-97T	062	AZ326	712			CLS 4-3/8” / 1/16” (T), 1-3/8 (C)				
DS	2-47A406-12-97B	062	AZ326	712			CLS 4-1/2” / 1/16” (T), 1-3/8” (C)				
DS	2-47A406-12-98N	062	AZ53	712			CLS 2-1/2” /1/10” (T), 1-1/4” (C)				
DS	2-47A406-12-98S	062	AZ53	712			CLS 2-1/2” / 1/10” (T), 1-1/4” (C)				
DS	2-47A406-12-101	062	AZ44	712			CLS 2-7/16” / 1/16” (T), 13/16” (C)				
DS	47A406-13-56	062	AZ216	726			CLS .9” / .74”(T), .02” (C)				
DS	2-47A406-13-106	062	AZ52	727			CLS 2-7/16” / 1/16” (T), 1/8” (C)				
DS	2-47A406-14-67	062	AZ123	720			CLS 2” / 1-1/16” (T), 1/16” (C)				
VS	2-47A406-14-81	062	AZ321	728	N/A		CLS 441# / + 1/4” / -1/16” (NOR), +5/8” / -1/2” (MAX)				
DS	2-47A406-14-84	062	AZ123	726	N/A		CLS 2-1/4” / 3/16” (T), 5/16” (C)				
DS	2-47A406-14-85	062	AZ122	725	N/A		CLS 2-1/4” / 7/8” (T), 0 (C)				
DS	2-47A406-14-86	062	AZ122	725	N/A		CLS 2-1/8” / 1/8” (T), 1/8” (C)				
DS	2-47A406-14-87	062	AZ185	730	N/A		CLS 2” / 1/8” (T), 1/16” (C)				
DS	47A465-3-52	062	AZ53	712			CLS 2-1/2” / 1/32” (T), 1/4” (C)				
DS	2-47A560-38-2	062	AZ220	704			CLS 2-1/8” / 1-7/16” (T), 1/16” (C)				

Attachment 18
(Page 20 of 37)

AMBIENT <105°F DATA FOR DYNAMIC SNUBBERS, VARIABLE SPRINGS AND CONSTANT SPRINGS

Date _____

TYPE SUPT	SUPPORT IDENTIFIER	SYS	LOCATION	ELEV	SERIAL NO.	TEMP °F	SET POINT / MOVEMENT	SCALE READING	PERFORMER INIT/ DATE	VERIFIER INIT/ DATE	COMMENTS
DS	2-63-001	063	AZ42	725			CLS 3-1/2” / 1/16” (T), 15/16” (C)				
VS	2-63-002	063	AZ45	728	N/A		CLS 2,431# / +15/16” / -1/16” (NOR), +11/16” / -3/8” (MAX)				
DS	2-63-005	063	AZ40	728			CLS 2-3/16” / 3/16” (T), 1/16” (C)				
DS	2-63-008	063	AZ31	718			4-1/2” / 3/8” (T), 1/16” (C)				
DS	2-63-011	063	AZ40	726			1-1/8” / 1/16” (T), 1/8” (C)				
VS	2-63-013	063	AZ34	740	N/A		CLS 1,466# / +11/16” / -1/32” (NOR), +11/16” / -1/32” (MAX)				
DS	2-63-014	063	AZ34	738			CLS 2” / 11/16” (T), 1/32” (C)				
VS	2-63-016	063	AZ18	741	N/A		CLS 262# / +1-1/8” / -3/16” (NOR), +1-1/8” / -3/16” (MAX)				
DS	2-63-018	063	AZ21	738			CLS 2” / 1-1/8” (T), 1/16” (C)				
DS	2-63-019	063	AZ16	740			CLS 2-1/2” / 1/8” (T), 1-15/16” (C)				
VS	2-63-020	063	AZ12	740	N/A		CLS 1,375 / +1-9/16” / -1/4” (NOR), +1-7/8” / -1/2” (MAX)				
DS	2-63-022	063	AZ358	740			CLS 4” / 1/4” (T), 2-3/4” (C)				
DS	2-63-023	063	AZ342	736			CLS 1-1/4” / 3/8”(T), 1/16” (C)				
DS	2-63-024	063	AZ342	740			CLS 2-3/4” / 1/8” (T),15/16” (C)				
VS	2-63-026	063	AZ320	741	N/A		CLS 1,332# / +3/4” / -0” (NOR), +13/16” / -1/16” (MAX)				
VS	2-63-028	063	AZ308	741	N/A		CLS 1,868# / 7/8” (UP) (NOR), 7/8”(UP) (MAX)				
DS	2-63-029	063	AZ308	735			CLS 1-1/4” / 7/8” (T), 0” (C)				

Attachment 18
(Page 21 of 37)

AMBIENT <105°F DATA FOR DYNAMIC SNUBBERS, VARIABLE SPRINGS AND CONSTANT SPRINGS

Date _____

TYPE SUPT	SUPPORT IDENTIFIER	SYS	LOCATION	ELEV	SERIAL NO.	TEMP °F	SET POINT / MOVEMENT	SCALE READING	PERFORMER INIT/ DATE	VERIFIER INIT/ DATE	COMMENTS
DS	2-63-030	063	AZ308	738			CLS 3” / 1/4” (T), 1/16” (C)				
DS	2-63-031	063	AZ300	735			CLS 1-1/2” / 7/16” (T), 1/16” (C)				
DS	2-63-032	063	AZ300	734			CLS 2” / 13/16” (T), 1/8” (C)				
DS	2-63-035	063	AZ35	728			CLS 3” / 0” (T), 1” (C)				
DS	2-63-038E	063	AZ35	731			CLS 2-3/4” / 1/4” (T), 1/16” (C)				
DS	2-63-038W	063	AZ35	731			CLS 3-1/4” / 1/4” (T), 1/16” (C)				
DS	2-63-042	063	AZ297	734			CLS 2-3/4” / 1/2” (T), 1/16 (C)				
DS	2-63-043	063	AZ297	734			CLS 2-3/8” / 1/8” (T), 0” (C)				
DS	2-63-055	063	AZ111	741			CLS 3-5/8” / 1/8” (T), 2-1/8” (C)				
DS	2-63-062	063	AZ215	741			CLS 3-1/2” / 1/8” (T), 1-1/2” (C)				
VS	2-63-063	063	AZ218	736	N/A		CLS 2,106# / +13/16” / -0” (NOR), +13/16” / -1/16” (MAX)				
DS	2-63-064	063	AZ218	734			CLS 2-1/4” / 0” (T), 3/4” (C)				
DS	2-63-069	063	AZ215	740			CLS 1-3/8” / 1-7/16” (T), 1/16” (C)				
VS	2-63-070	063	AZ225	729	N/A		CLS 3,860# / +5/16” (UP) / -0” (DN) (NOR), +5/16” (UP) / -0” (DN) (MAX)				
DS	2-63-072	063	AZ218	725			CLS 2-1/2” / 1/16” (T), 1/8” (C)				
DS	2-63-078	063	AZ145	736			CLS 3-3/4” / 1/8”(T), 3/4” (C)				
VS	2-63-080	063	AZ145	729	N/A		CLS 1,520# / +1/32” / -1/2” (NOR), +1/32” / -1/2” (MAX)				
DS	2-63-095N	063	AZ215	727			CLS 1-3/4” / 0” (T), 5/8” (C)				
DS	2-63-095S	063	AZ215	727			CLS 2” / 1/8” (T), 1/16” (C)				

Attachment 18
(Page 22 of 37)

AMBIENT <105°F DATA FOR DYNAMIC SNUBBERS, VARIABLE SPRINGS AND CONSTANT SPRINGS

Date _____

TYPE SUPT	SUPPORT IDENTIFIER	SYS	LOCATION	ELEV	SERIAL NO.	TEMP °F	SET POINT / MOVEMENT	SCALE READING	PERFORMER INIT/ DATE	VERIFIER INIT/ DATE	COMMENTS
DS	2-63-156	063	AZ300	725			CLS 2” / 1/16” (T), 11/16” (C)				
DS	2-63-161	063	AZ300	723			CLS 1-15/16” / 1/16” (T), 5/16” (C)				
DS	2-63-163	063	AZ304	722			CLS 1-1/2” / 1/16”(T), 3/16” (C)				
DS	2-63-164	063	AZ302	722			CLS 2-1/4” / 1/2” (T), 1/8” (C)				
VS	2-63-165	063	AZ302	722	N/A		CLS 66 / +1/4” / 0” (NOR), +5/16” / -1/16” (MAX)				
DS	2-63-169	063	AZ295	732			CLS 1-5/8” / 1/16” (T), 1/16” (C)				
DS	2-63-185	063	AZ42	729			CLS 2-1/2” / 1/16” (T), 1-1/8” (C)				
DS	2-63-285	063	AZ181	730			CLS 1-3/4” / 3/16” (T), 1/16” (C)				
VS	2-63-342	063	AZ188	731	N/A		CLS 2,356# / 3/8” (UP)				
DS	2-63-365	063	AZ37	727			CLS 2-7/8” / 1/16” (T), 3/4” (C)				
VS	2-63-367	063	AZ37	731	N/A		CLS 2,140# / +7/8” / -0” (NOR), +1-3/16” / -1/4” (MAX)				
VS	2-63-451	063	AZ321	725	N/A		CLS 2,900 / +3/8” / -1/16” (NOR), +3/4” / -1/2” (MAX)				
DS	2-63-453	063	AZ324	724			CLS 2-7/8” / 1/16” (T), 3/8” (C)				
DS	2-63-458	063	AZ324	723			CLS 4-1/2” / 11/16” (T), 1/16” (C)				
DS	2-63-459	063	AZ324	718			CLS 2” / 0” (T), 7/8” (C)				
VS	2-63-466E	063	AZ324	730	N/A		CLS 148# / +1/4” / -1/16” (NOR), +1/4” / -1/16” (MAX)				
VS	2-63-466W	063	AZ324	730	N/A		CLS 160# / +1/4” / -1/16” (NOR), +1/4” / -1/16” (MAX)				

Attachment 18
(Page 23 of 37)

AMBIENT <105°F DATA FOR DYNAMIC SNUBBERS, VARIABLE SPRINGS AND CONSTANT SPRINGS

Date _____

TYPE SUPT	SUPPORT IDENTIFIER	SYS	LOCATION	ELEV	SERIAL NO.	TEMP °F	SET POINT / MOVEMENT	SCALE READING	PERFORMER INIT/ DATE	VERIFIER INIT/ DATE	COMMENTS
DS	2-63-520	063	AZ45	723			CLS 1-3/4” / 1-1/16” (T), 1/16” (C)				
DS	2-63-526	063	AZ45	725			CLS 3-1/16” / 5/8” (T), 1/8” (C)				
DS	2-63-528	063	AZ293	733			CLS 1” / 1/16” (T), 1/16” (C)				
DS	2-63-571	063	AZ150	729			CLS 7/8” / 9/16" (T), 1/16" (C)				
DS	2-63-573	063	AZ181	730			CLS 1-1/2” / 1/16” (T), 1/4” (C)				
DS	2-63-584	063	AZ39	732			CLS 1-5/16” / 1-1/2” (T), 1/16” (C)				
VS	2-63-588	063	AZ142	731	N/A		CLS 1,988 / -1/8” (EXT)				
DS	2-63-592	063	AZ344	741			CLS 1-1/2” / 2-5/16” (T), 1/2” (C)				
DS	47A432-1-8T	063	U-A12	688			CLS 3-7/16” / 1/8” (T), 7/8” (C)				
DS	47A432-1-8B	063	U-A12	688			CLS 3-7/16” / 1/8” (T), 7/8” (C)				
DS	47A432-3-6	063	AZ37	728			CLS 2-3/4” / 1/8” (T), 3/8” (C)				
DS	47A432-3-8	063	AZ142	727			CLS 3” / 0” (T), 3/8” (C)				
DS	2-47A432-3-13	063	AZ35	737			CLS 2-1/2” / 3/4” (T), 1/16” (C)				
DS	2-47A432-3-14	063	AZ38	727			CLS 1-3/4” / 1/16” (T), 11/16” (C)				
DS	2-47A432-3-15	063	AZ142	728			CLS 2-1/4” / 3/4” (T), 1/16” (C)				
DS	2-47A432-3-16	063	AZ157	725			CLS 4” / 3/8” (T), 3/8” (C)				
DS	47A435-3-8	063	U-A13	706			CLS 1-1/8” / 1/4” (T), 1/16” (C)				
DS	2-47A435-3-18T	063	U-C13	719			CLS 3” / 3/16” (T), 3/8” (C)				
DS	2-47A435-3-18B	063	U-C13	719			CLS 3” / 3/16” (T), 3/8” (C)				
DS	2-47A435-12-6	063	AZ291	721			CLS 2” / 1/16” (T), 3/8” (C)				
DS	47A435-12-62	063	AZ324	731			CLS 5/8” / 5/16” (T), 1/16” (C)				

Attachment 18
(Page 24 of 37)

AMBIENT <105°F DATA FOR DYNAMIC SNUBBERS, VARIABLE SPRINGS AND CONSTANT SPRINGS

Date _____

TYPE SUPT	SUPPORT IDENTIFIER	SYS	LOCATION	ELEV	SERIAL NO.	TEMP °F	SET POINT / MOVEMENT	SCALE READING	PERFORMER INIT/ DATE	VERIFIER INIT/ DATE	COMMENTS
DS	47A435-12-89	063	AZ324	728			CLS 1-1/4” / 3/16” (T), 1/16” (C)				
DS	2-47A435-12-93	063	AZ300	723			CLS 5/8” / 1-5/16” (T), 1/16” (C)				
DS	47A435-13-60	063	AZ32	723			CLS 1” / 7/8” (T), 0” (C)				
VS	47A435-13-73	063	AZ347	740	N/A		CLS 1,125# / +11/16” / -3/16” (NOR), + 7/8” / -5/16” (MAX)				
DS	2-47A435-13-117	063	AZ45	721			CLS 1-3/4” / 1/16” (T), 1” (C)				
DS	2-47A435-13-118	063	AZ45	718			CLS 2” / 3/16” (T),1/16” (C)				
VS	2-47A435-13-119	063	AZ45	718	N/A		CLS 91# / +1/16” / -1/16” (NOR), +1/4” / -1/4” (MAX)				
VS	47A435-14-61	063	AZ125	721	N/A		CLS 1,715# / +3/16” (UP) (NOR), 1/2” (UP) (MAX)				
DS	47A435-14-80N	063	AZ146	725			CLS 1-1/2" / 1/16" (T), 5/16" (C)				
DS	47A435-14-80S	063	AZ146	725			CLS 1-1/2" / 1/16" (T), 5/16" (C)				
VS	47A435-14-81	063	AZ145	730	N/A		CLS 175 / +.01” / -.34” (NOR), +.02” / -.40” (MAX)				
VS	47A435-14-84	063	AZ150	730	N/A		CLS 48# / +0 UP”, -3/16” DOWN (NOR), +0 UP”, -3/16” DOWN (MAX)				
DS	2-47A435-14-107	063	AZ143	727			CLS 1-1/4” / 1/8” (T), 3/8” (C)				
DS	2-47A435-14-109	063	AZ199	721			CLS 1-11/16” / 0” (T), 7/8” (C)				
VS	47A435-14-110	063	AZ132	720	N/A		CLS 200# / +3/16” / -0” (NOR), +3/8” / -1/16” (MAX)				
VS	47A435-15-58	063	AZ228	720	N/A		CLS 154# / +.02” / -.01” (NOR), +.34” / -.32” (MAX)				

Attachment 18
(Page 25 of 37)

AMBIENT <105°F DATA FOR DYNAMIC SNUBBERS, VARIABLE SPRINGS AND CONSTANT SPRINGS

Date _____

TYPE SUPT	SUPPORT IDENTIFIER	SYS	LOCATION	ELEV	SERIAL NO.	TEMP °F	SET POINT / MOVEMENT	SCALE READING	PERFORMER INIT/ DATE	VERIFIER INIT/ DATE	COMMENTS
DS	47A435-15-70	063	AZ232	718			CLS 2-3/8"/ 3/8" (T), 1/16" (C)				
DS	47A435-15-79	063	AZ219	724			CLS 1-1/2" / 0" (T), 3/4" (C)				
DS	47A435-15-97	063	AZ218	723			CLS 3" / 1/16" (T), 11/16" (C)				
DS	47A435-16-17	063	AZ286	729			CLS 1-1/8" / 1/16" (T), 3/16" (C)				
DS	47A435-16-21E	063	AZ292	733			CLS 2-7/16" / 1/16" (T), 1/16" (C)				
DS	47A435-16-21W	063	AZ292	733			CLS 3-1/8" / 1/16" (T), 1/16" (C)				
DS	47A435-16-31	063	AZ285	731			CLS 2 1/4" / 1/16" (T), 3/16" (C)				
DS	47A435-16-33N	063	AZ289	731			CLS 3" / 1/16" (T), 1/16" (C)				
DS	47A435-16-33S	063	AZ289	731			CLS 1" / 1/16" (T), 1/4" (C)				
DS	47A435-16-34N	063	AZ282	726			CLS 2-7/8" / 1/16" (T), 3/16" (C)				
DS	47A435-16-34S	063	AZ282	726			CLS 2" / 0" (T), 1/32" (C)				
DS	47A435-16-47	063	AZ289	733			CLS 2-3/4" / 1/16" (T), 3/16" (C)				
DS	47A435-16-50S	063	AZ298	724			CLS 2" / 1/16" (T), 5/16" (C)				
DS	47A435-16-50E	063	AZ298	724			CLS 2" / 1/8" (T), 3/8" (C)				
DS	47A435-16-51	063	AZ291	729			CLS 2" / 3/16" (T), 0" (C)				
DS	47A435-16-55E	063	AZ295	732			CLS 2-7/8" / 1/16" (T), 1/8" (C)				
DS	47A435-16-55S	063	AZ295	732			CLS 2" / 1/8" (T), 1/4" (C)				
DS	47A435-16-62N	063	AZ294	725			CLS 1-3/16" / 1/16" (T), 0" (C)				
DS	47A435-16-62S	063	AZ294	725			CLS 1-3/16" / 1/16" (T), 0" (C)				
DS	47A435-16-65	063	AZ296	719			CLS 2-5/8" / 0" (T), 3/8" (C)				
DS	47A435-16-66	063	AZ296	719			CLS 2" / 1/8" (T), 1/4" (C)				

Attachment 18
(Page 26 of 37)

AMBIENT <105°F DATA FOR DYNAMIC SNUBBERS, VARIABLE SPRINGS AND CONSTANT SPRINGS

Date _____

TYPE SUPT	SUPPORT IDENTIFIER	SYS	LOCATION	ELEV	SERIAL NO.	TEMP °F	SET POINT / MOVEMENT	SCALE READING	PERFORMER INIT/ DATE	VERIFIER INIT/ DATE	COMMENTS
DS	2-47A435-16-73	063	AZ284	724			CLS 1-15/16” / 1/8” (T), 1/16” (C)				
VS	2-47A435-16-75	063	AZ284	724	N/A		CLS 155# / -1/16” (NOR), -1/16” (MAX)				
DS	2-47A435-16-76	063	AZ284	729			CLS 2” / 1/16” (T), 3/16” (C)				
DS	2-47A435-16-77	063	AZ285	729			CLS 2-3/16” / 1/16” (T), 3/8” (C)				
DS	2-47A435-16-78	063	AZ285	729			CLS 2” / 1/8” (T), 3/16” (C)				
VS	2-47A435-16-79	063	AZ298	731	N/A		CLS 210# / +5/16”, -1/16” (NOR) +3/8”, -1/16” (MAX)				
VS	47A437-1-25	063	T-A10	690	N/A		CLS 2,683# / +1/16” / -0” (NOR), +1/16” ‘ -1/16” (MAX)				
DS	2-47A437-1-62	063	U-A12	688			CLS 3-1/2” / 1/4” (T), 2-5/16” (C)				
DS	2-47A437-2-4	063	U-A11	681			CLS 2-7/8” / 5/16” (T), 1/16” (C)				
DS	47A437-2-22	063	T-A11	684			CLS 2” / 0” (T), 1/4” (C)				
DS	47A437-2-24	063	U-A11	686			CLS 1-1/2” / 3/16”(T), 1/16” (C)				
VS	47A437-2-28N	063	U-A11	676	N/A		CLS 7,141# / +.06” / -.31 (NOR), +.06” / -.31” (MAX)				
VS	47A437-2-28S	063	U-A11	676	N/A		CLS 7,141# / +.06” / -.31 (NOR), +.06” / -.31” (MAX)				
VS	47A437-2-29E	063	U-A10	681	N/A		CLS 1,341# / +1/16” / -0” (NOR), +1/16” / 0” (MAX)				
VS	47A437-2-29W	063	U-A10	681	N/A		CLS 1509# / +1/16” / -0” (NOR), +1/16” / 0” (MAX)				
DS	63-2SIS-V142N	063	V-A10	687	N/A		CLS 2-1/2” / 3/16” (T), 1/4” (C)				

Attachment 18
(Page 27 of 37)

AMBIENT <105°F DATA FOR DYNAMIC SNUBBERS, VARIABLE SPRINGS AND CONSTANT SPRINGS

Date _____

TYPE SUPT	SUPPORT IDENTIFIER	SYS	LOCATION	ELEV	SERIAL NO.	TEMP °F	SET POINT / MOVEMENT	SCALE READING	PERFORMER INIT/ DATE	VERIFIER INIT/ DATE	COMMENTS
DS	63-2SIS-V142S	063	V-A10	687	N/A		CLS 2-1/2” / 3/16” (T), 1/4” (C)				
VS	63-2SIS-V143N	063	V-A11	690	N/A		CLS 978# / +1/4” / 0” (NOR), +1/8” / -3/16” (MAX)				
VS	63-2SIS-V143S	063	V-A11	690	N/A		CLS 1,775# / +1/4” / 0” (NOR), +1/8” / -3/16” (MAX)				
VS	63-2SIS-V145	063	V-A11	691	N/A		CLS 2,177# / +1/8” / -1/4” (NOR), +1/16” / -7/16” (MAX)				
DS	63-2SIS-R155	063	V-A12	688			CLS 3.4” / 0” (T), 13/16” (C)				
VS	63-2SIS-V166N	063	U-A10	689	N/A		CLS 773 / +.21” / -.05” (NOR), +.22” / -.06” (MAX)				
VS	63-2SIS-V166S	063	U-A10	689	N/A		CLS 773 / +.21” / -.05” (NOR), +.22” / -.06” (MAX)				
DS	63-2SIS-R168N	063	U-A10	689			CLS 2-5/8” / 1/32” (T), 5/16” (C)				
DS	63-2SIS-R168S	063	U-A10	689			CLS 2-5/8” / 1/32” (T), 5/16” (C)				
DS	63-2SIS-R170	063	U-A12	687			CLS 3-1/2” / 0” (T), 1-9/16” (C)				
DS	63-2SIS-R211	063	V-A12	688			CLS 2-1/2” / 9/16” (T), 0” (C)				
DS	63-2SIS-R214	063	V-A11	686			CLS 3” / .89” (T), 0” (C)				
DS	63-2SIS-R216	063	U-A11	684			CLS 2-3/4” / 0” (T), 1/8” (C)				
DS	63-2SIS-R240N	063	U-A12	686			CLS 1” / 13/16”” (T), 0” (C)				

Attachment 18
(Page 28 of 37)

AMBIENT <105°F DATA FOR DYNAMIC SNUBBERS, VARIABLE SPRINGS AND CONSTANT SPRINGS

Date _____

TYPE SUPT	SUPPORT IDENTIFIER	SYS	LOCATION	ELEV	SERIAL NO.	TEMP °F	SET POINT / MOVEMENT	SCALE READING	PERFORMER INIT/ DATE	VERIFIER INIT/ DATE	COMMENTS
DS	63-2SIS-R240S	063	U-A12	686			CLS 2” / 13/16”” (T), 0” (C)				
DS	63-2SIS-R242	063	U-A12	686			CLS 2-5/8” / 11/16” (T), 0” (C)				
DS	63-2SIS-R245	063	T-A11	686			CLS 2-1/2” / 0” (T), 1/8” (C)				
DS	63-2SIS-R276	063	T-A11	689			CLS 2” / 5/16” (T), 0” (C)				

Attachment 18
(Page 29 of 37)

AMBIENT <105°F DATA FOR DYNAMIC SNUBBERS, VARIABLE SPRINGS AND CONSTANT SPRINGS

Date _____

TYPE SUPT	SUPPORT IDENTIFIER	SYS	LOCATION	ELEV	SERIAL NO.	TEMP °F	SET POINT / MOVEMENT	SCALE READING	PERFORMER INIT/ DATE	VERIFIER INIT/ DATE	COMMENTS
VS	2-68-001	068	AZ147	724	N/A		CLS 5,695# / +3/8" / -0" (NOR), +5/8" / -1/4" (MAX)				
VS	2-68-005	068	AZ92	725	N/A		CLS 4,614 / +0" / -1-1/2" (NOR), +0" / -2-1/4" (MAX)				
CS	2-68-011N	068	AZ104	787	N/A		CLS 1.8 INC / +2.70" / -.11" (MAX)				
CS	2-68-011S	068	AZ104	787	N/A		CLS 1.8 INC / +2.70" / -.11" (MAX)				
DS	2-68-020	068	AZ104	733			CLS 2-11/16" / 5/8" (T), 1/16" (C)				
DS	2-68-021	068	AZ110	729			CLS 2-7/8" / 1/16" (T), 9/16" (C)				
DS	2-68-023E	068	AZ109	736			CLS 1-7/8" / 1/16" (T), 15/16" (C)				
DS	2-68-023W	068	AZ109	736			CLS 1-7/8" / 1/16" (T), 15/16" (C)				
DS	2-68-024	068	AZ108	736			CLS 2-1/8" / 1/16" (T), 7/8" (C)				
VS	2-68-025	068	AZ110	733	N/A		CLS 1,113# / +1/16" /-7/16" (NOR), +1/16 / -7/16" (MAX)				
VS	2-68-028	068	AZ104	754	N/A		CLS 758# / +.95" / -.05" (NOR), +1.29" / -.34" (MAX)				
DS	2-68-030	068	AZ110	732			CLS 3" / 1/4" (T), 3/8" (C)				
DS	2-68-031	068	AZ104	733			CLS 2-1/16" / 0" (T), 9/16" (C)				
DS	2-68-032	068	AZ98	736			CLS 1.81" / 0" (T), 1-3/16" (C)				
DS	2-68-033	068	AZ98	736			CLS 2-1/8" / 5/16" (T), 3/8" (C)				
DS	2-68-034	068	AZ98	733			CLS 1-1/8" / 1" (T), 1/16" (C)				
DS	2-68-036	068	AZ98	733			CLS 1-15/16" / 1/4" (T), 3/4" (C)				
DS	2-68-042	068	AZ104	735			CLS 3-1/4" / 1/16" (T), 13/16" (C)				

Attachment 18
(Page 30 of 37)

AMBIENT <105°F DATA FOR DYNAMIC SNUBBERS, VARIABLE SPRINGS AND CONSTANT SPRINGS

Date _____

TYPE SUPT	SUPPORT IDENTIFIER	SYS	LOCATION	ELEV	SERIAL NO.	TEMP °F	SET POINT / MOVEMENT	SCALE READING	PERFORMER INIT/ DATE	VERIFIER INIT/ DATE	COMMENTS
VS	2-68-043	068	AZ108	735	N/A		CLS 678# / +.06” / -.32” (NOR), +.06” / -.32” (MAX)				
DS	2-68-044	068	AZ108	734			CLS 1-7/16” (+1/16”, -3/8”) / 5/8” (T), 1/16” (C)				
DS	2-68-050	068	AZ104	733			CLS 1-3/4” / 9/16”” (T), 1/8” (C)				
DS	2-68-053	068	AZ98	733			CLS 2-3/8” / 1/8” (T), 1-1/16” (C)				
DS	2-68-093	068	AZ100	784			CLS 3/4” / 4-5/8” (T), 1/8” (C)				
CS	2-68-094	068	AZ99	791	N/A		CLS 3/4” / 4-1/2” (UP)				
DS	2-68-096	068	AZ104	784			CLS 11/16” (± 1/8) / 3-13/16” (T), 1/8” (C)				
VS	2-68-334	068	AZ47	707	N/A		CLS 153# / +.01” / -.20” (NOR), +.11” / -.26” (MAX)				
DS	2-68-348	068	AZ142	706			CLS 162# . +.03” / -.63” (NOM), +.03” / -.75” (MAX)				
VS	2-68-379	068	AZ323	707	N/A		CLS 124# / 3/4” (DOWN)				
VS	2-68-382	068	AZ321	708	N/A		CLS 157# / .52” (DOWN (NOR), .78” (DOWN) (MAX)				
DS	2-68-404E	068	AZ82	754			CLS 5-3/8” / 1/16” (T), 4-7/8” (C)				
DS	2-68-404W	068	AZ82	754			CLS 5-3/8” / 1/16” (T), 4-7/8” (C)				
DS	2-68-406E	068	AZ87	747			CLS 3” / 1/4” (T), 1/4” (C)				
DS	2-68-406W	068	AZ87	747			CLS 3” / 1/4” (T), 1/4” (C)				
DS	2-68-412N	068	AZ99	786			CLS 1-3/4” / 1/8” (T), 5/16” (C)				
DS	2-68-412S	068	AZ99	788			CLS 1-3/4” / 1/8” (T), 5/16” (C)				

Attachment 18
(Page 31 of 37)

AMBIENT <105°F DATA FOR DYNAMIC SNUBBERS, VARIABLE SPRINGS AND CONSTANT SPRINGS

Date _____

TYPE SUPT	SUPPORT IDENTIFIER	SYS	LOCATION	ELEV	SERIAL NO.	TEMP °F	SET POINT / MOVEMENT	SCALE READING	PERFORMER INIT/ DATE	VERIFIER INIT/ DATE	COMMENTS
DS	2-68-415N	068	AZ97	787			CLS 2” / 7/8” (T), 1/16” (C)				
DS	2-68-415S	068	AZ97	787			CLS 2” / 1-1/16” (T), 1/16” (C)				
DS	2-68-427	068	AZ97	778			CLS 2-3/4” / 1/8” (T), 3/8” (C)				
DS	2-68-429E	068	AZ104	761			CLS 2-9/16” / 1/4” (T), 9/16” (C)				
DS	2-68-429W	068	AZ104	761			CLS 2-9/16” / 1/4” (T), 9/16” (C)				
DS	2-47A465-1-108	068	AZ110	729			CLS 2-3/4” /1/16” (T), 1/2” (C)				
DS	47A465-2-23	068	AZ100	776			CLS 3-7/8” / 0” (T), 3-3/16” (C)				
DS	47A465-2-41	068	AZ104	775			CLS 1-1/2” / 1/16” (T), 1/4” (C)				
CS	47A465-2-42	068	AZ104	775	N/A		CLS 3/4” / 2.96” (UP)				
DS	47A465-2-46	068	AZ97	758			CLS 3” / 0” (T), 2-1/8” (C)				
VS	47A465-2-47	068	AZ100	758	N/A		CLS 130# / 2.10” (NOR), 2.12” (MAX)				
VS	2-47A465-2-81	068	AZ99	737	N/A		CLS 50# / +1/4” / -0” (NOR), +5/16” / -1/16” (MAX)				
DS	47A465-4-7E	068	AZ104	736			CLS 1-3/4 / 0” (T), 3/8” (C)				
DS	47A465-4-7W	068	AZ104	736			CLS 1-3/8 ” / 1/16” (T), 3/16” (C)				
DS	47A465-8-60	068	AZ335	742			CLS 2-1/2” / 1/16” (T), 7/16” (C)				
DS	47A465-8-61	068	AZ65	742			CLS 2-11/16” / 1/16” (T), 1-11/16” (C)				
DS	47A465-8-63	068	AZ145	742			CLS 2-3/4” / 1/16” (T), 1-1/2” (C)				
VS	47A465-8-73	068	AZ40	752	N/A		CLS 144# / +2-1/6” / -1/16” (NOR), +2-7/16” / -7/16” (MAX)				

Attachment 18
(Page 32 of 37)

AMBIENT <105°F DATA FOR DYNAMIC SNUBBERS, VARIABLE SPRINGS AND CONSTANT SPRINGS

Date _____

TYPE SUPT	SUPPORT IDENTIFIER	SYS	LOCATION	ELEV	SERIAL NO.	TEMP °F	SET POINT / MOVEMENT	SCALE READING	PERFORMER INIT/ DATE	VERIFIER INIT/ DATE	COMMENTS
VS	2-47A465-8-97	068	AZ111	742	N/A		CLS 100 / +3/4” / -1/16” (NOR), +7/8” / -3/16” (MAX)				

Attachment 18
(Page 33 of 37)

AMBIENT <105°F DATA FOR DYNAMIC SNUBBERS, VARIABLE SPRINGS AND CONSTANT SPRINGS

Date _____

SAFETY INJECTION PUMP B-B DISCHARGE TO LOOP #4 HOT LEG											
TYPE SUPT.	SUPPORT IDENTIFIER	SYS	LOCATION	ELEV.	SERIAL NO.	TEMP °F	SET POINT / MOVEMENT	SCALE READING	PERFORMER INIT/ DATE	VERIFIER INIT/ DATE	COMMENTS
DS	2-74-015	074	AZ0	724			CLS 1-3/4” / .55” (T), .02” (C)				
DS	2-74-017	074	AZ0	722			CLS 1” / 3/16” (T), 0” (C)				

FROM LOOP #4 HOT LEG TO RHR PUMPS A AND B SUCTION											
TYPE SUPT.	SUPPORT IDENTIFIER	SYS	LOCATION	ELEV.	SERIAL NO.	TEMP °F	SET POINT / MOVEMENT	SCALE READING	PERFORMER INIT/ DATE	VERIFIER INIT/ DATE	COMMENTS
COMMON											
VS	2-74-022	074	AZ354	716	N/A		CLS 10,515# / +1/16 / -3/4” (NOR), +1/16” / -3/4” (MAX)				
DS	47A432-3-4	074	AZ349	707			CLS 3-3/4” / 7/16” (T), 1/16” (C)				
DS	2-74-010	074	AZ354	707			CLS 3” / 7/16” (T), 1/16” (C)				
DS	2-74-011	074	AZ361	707			CLS 4” / .06” (T), 1.64” (C)				
VS	2-74-012	074	AZ347	707	N/A		CLS 2,340# / +.03” / -.66”(NOR), +.17” / -.83” (MAX)				
VS	2-47A432-3-17	074	AZ354	707	N/A		CLS 3,482# / +1/16” / -3/8” (NOR) +1/16” / -3/8” (MAX)				
DS	2-74-008	074	AZ354	707			CLS 4-1/4” / 7/16” (T), 1-1/16” (C)				
DS	47A432-2-2	063	V-A11	718			CLS 3” / 0” (T), 13/16” (C)				

Attachment 18
(Page 34 of 37)

AMBIENT <105°F DATA FOR DYNAMIC SNUBBERS, VARIABLE SPRINGS AND CONSTANT SPRINGS

Date _____

FROM LOOP #4 HOT LEG TO RHR PUMPS A AND B SUCTION											
TYPE SUPT.	SUPPORT IDENTIFIER	SYS	LOCATION	ELEV.	SERIAL NO.	TEMP °F	SET POINT / MOVEMENT	SCALE READING	PERFORMER INIT/ DATE	VERIFIER INIT/ DATE	COMMENTS
VS	63-2SIS-V179	063	V-A11	697	N/A		CLS 2,519# / +1/4" / -1/16" (NOR), +5/16" / -5/32" (MAX)				
VS	63-2SIS-V180	063	V-A11	723	N/A		CLS 4,306# / +1/8" / -0" (NOR), +3/16" / -3/16" (MAX)				
DS	2-47A432-6-17	063	V-A11	693			CLS 2-5/8" / 1/16" (T), 3/16" (C)				
FROM LOOP #4 HOT LEG TO RHR PUMP A SUCTION											
VS	63-2SIS-V134	063	V-A11	678	N/A		CLS 4,360# / +1/8" / -0" (NOR), +1/16" / -1/4" (MAX)				
VS	63-2SIS-V136	063	V-A11	676	N/A		CLS 2,082# / -5/32" (NOR), +1/32, -3/16" (MAX)				
VS	63-2SIS-V139NW	063	V-A10	677	N/A		CLS 263# / +0" / -.13" (NOR), +0" / -.14" (MAX)				
VS	63-2SIS-V139SE	063	V-A10	677	N/A		CLS 331# / +0" / -.13" (NOR), +0" / -.14" (MAX)				

Attachment 18
(Page 35 of 37)

AMBIENT <105°F DATA FOR DYNAMIC SNUBBERS, VARIABLE SPRINGS AND CONSTANT SPRINGS

Date _____

FROM LOOP #4 HOT LEG TO RHR PUMPS A AND B SUCTION											
FROM LOOP #4 HOT LEG TO RHR PUMP B SUCTION											
TYPE SUPT.	SUPPORT IDENTIFIER	SYS	LOCATION	ELEV.	SERIAL NO.	TEMP °F	SET POINT / MOVEMENT	SCALE READING	PERFORMER INIT/ DATE	VERIFIER INIT/ DATE	COMMENTS
VS	63-2SIS-V158	063	U-A11	678	N/A		CLS 6,135 / +1/16” / -0” (NOR), +1/8” / -1/8” (MAX)				
VS	63-2SIS-V163N	063	U-A10	677	N/A		CLS 1,850# / -1/16” (NOR), +0” / -1/8” (MAX)				
VS	63-2SIS-V163S	063	U-A10	677	N/A		CLS 1,244# / -1/16” (NOR), +0” / -1/8” (MAX)				

Attachment 18
(Page 36 of 37)

AMBIENT <105°F DATA FOR DYNAMIC SNUBBERS, VARIABLE SPRINGS AND CONSTANT SPRINGS

Date _____

RHR PUMP A-A DISCHARGE TO RHR HEAT EXCHANGER A											
TYPE SUPT.	SUPPORT IDENTIFIER	SYS	LOCATION	ELEV.	SERIAL NO.	TEMP °F	SET POINT / MOVEMENT	SCALE READING	PERFORMER INIT/ DATE	VERIFIER INIT/ DATE	COMMENTS
DS	74-2RHR-R096	074	V-A11	688			CLS 3” / 1/16” (T), 1” (C)				
RHR HEAT EXCHANGER A DISCHANGE TO COLD LEG INJECTION											
DS	74-2RHR-R014N	074	W-A10	732			CLS 1” / 0” (T), 1/4” (C)				
DS	74-2RHR-R014S	074	W-A10	732			CLS 1” / 0” (T), 1/4” (C)				
VS	74-2RHR-V015N	074	W-A10	733	N/A		CLS 661# / +1/4”, -1/16” (NOR), +1/4” / -1/16” (MAX)				
VS	74-2RHR-V015S	074	W-A10	733	N/A		CLS 661# / +1/4”, -1/16” (NOR), +1/4” / -1/16” (MAX)				
DS	74-2RHR-R028	074	V-A11	732			CLS 4-1/16” / 1/16” (T), 1/16” (C)				
VS	74-2RHR-V121	074	W-A10	719	N/A		CLS 711# / +1/16”, -0” (NOR), +1/16”, -0” (MAX)				
DS	74-2RHR-R216	074	W-A11	728			CLS 2” / 1/2” (T), 1/16” (C)				
DS	74-2RHR-R220	074	W-A11	729			CLS 3” / 1/16” (T), 1/8” (C)				
RHR HEAT EXCHANGER A BYPASS LINE											
TYPE SUPT.	SUPPORT IDENTIFIER	SYS	LOCATION	ELEV.	SERIAL NO.	TEMP °F	SET POINT / MOVEMENT	SCALE READING	PERFORMER INIT/ DATE	VERIFIER INIT/ DATE	COMMENTS
DS	74-2RHR-R037	074	W-A9	730			CLS 3” / 3/8” (T), 1/16” (C)				
VS	74-2RHR-V038	074	W-A9	730	N/A		CLS 2472# / +7/16”, -1/16” (NOR), +7/16” / -1/16” (MAX)				

Attachment 18
(Page 37 of 37)

AMBIENT <105°F DATA FOR DYNAMIC SNUBBERS, VARIABLE SPRINGS AND CONSTANT SPRINGS

Date _____

RHR PUMP B-B DISCHARGE TO RHR HEAT EXCHANGER B											
TYPE SUPT.	SUPPORT IDENTIFIER	SYS	LOCATION	ELEV.	SERIAL NO.	TEMP °F	SET POINT / MOVEMENT	SCALE READING	PERFORMER INIT/ DATE	VERIFIER INIT/ DATE	COMMENTS
DS	74-2RHR-R058	074	V-A11	689			CLS 2-1/2” / 1/16” (T), 1” (C)				
RHR HEAT EXCHANGER B DISCHANGE TO COLD LEG INJECTION											
VS	74-2RHR-V002	074	V-A10	729	N/A		CLS 1088# / +.31”, -.09” (NOR), +.50” / -.25” (MAX)				
DS	74-2RHR-R003E	074	V-A10	727			CLS 2” / 1/32” (T), 9/16” (C)				
DS	74-2RHR-R003W	074	V-A10	727			CLS 1-1/2” / 1/32” (T), 9/16” (C)				
DS	74-2RHR-R006	074	V-A10	721			CLS 2-1/4” / 1/4” (T), 0” (C)				
VS	74-2RHR-V011	074	V-A10	730	N/A		CLS 1624# / +7/16”, -1/8” (NOR), +5/8” / -5/16” (MAX)				
DS	74-2RHR-R230	074	W-A11	729			CLS 2-1/4” / 1/16” (T), 1/2” (C)				
DS	74-2RHR-R232	074	W-A11	729			CLS 3” / 0” (T), 7/16” (C)				
VS	2-47A435-2-2	074	V-A10	719	N/A		CLS 1478# / +1/16”, -1/16” (NOR), +1/8” / -1/8” (MAX)				
RHR HEAT EXCHANGER B BYPASS LINE											
TYPE SUPT.	SUPPORT IDENTIFIER	SYS	LOCATION	ELEV.	SERIAL NO.	TEMP °F	SET POINT / MOVEMENT	SCALE READING	PERFORMER INIT/ DATE	VERIFIER INIT/ DATE	COMMENTS
VS	74-2RHR-V041	074	V-A9	734	N/A		CLS 1509# / +9/16”, -1/16” (NOR), +11/16” / -1/16” (MAX)				

Attachment 19
(Page 1 of 37)

DYNAMIC SNUBBERS, VARIABLE SPRINGS AND CONSTANT SPRINGS 250° (245°-255°) PLATEAU DATA

Date _____

COLD LOAD SETTING (CLS) INCREMENT (INC)

TYPE SUPT.	SUPPORT IDENTIFIER	SYS	LOCATION	ELEV.	SERIAL NO.	TEMP °F	SET POINT / MOVEMENT	SCALE READING	PERFORMER INIT/ DATE	VERIFIER INIT/ DATE	COMMENTS
DS	2-01A-301	001	AZ4	773			CLS 3"/ 1-13/16" (T), 0" (C)				
CS	2-01A-302N	001	AZ5	767	N/A		CLS 8.75 INC / +2.35, - 0 INC				
CS	2-01A-302S	001	AZ5	767	N/A		CLS 8.75 INC / +2.35, - 0 INC				
DS	2-01A-303N	001	AZ4	761			CLS 3" / .011" (T), 2.365" (C)				
DS	2-01A-303S	001	AZ4	761			CLS 5-1/2" / .011" (T), 2.365" (C)				
DS	2-01A-304E	001	SOUTH VLV RM	733			CLS 1-1/2" / 11/16" (T), 13/16" (C)				
DS	2-01A-304W	001	SOUTH VLV RM	733			CLS 1-1/2" / 11/16" (T), 13/16" (C)				
VS	2-01A-305	001	AZ4	737	N/A		CLS 13,973# / 1.94" UP (NOR), 2.09" UP (MAX)				
DS	2-01A-307N	001	AZ5	703			CLS 3-5/8" / 3/8" (T), 0" (C)				
DS	2-01A-307S	001	AZ5	703			CLS 3-3/8" / 3/8" (T), 0" (C)				
DS	2-01A-308	001	SOUTH VLV RM	737			CLS 3" / .22" (T), .28" (C)				
VS	2-01A-309	001	SOUTH VLV RM	740	N/A		CLS 27,083# / +.005" / -.17" (NOR), +.23" / -.18" (MAX)				
DS	2-01A-312	001	SOUTH VLV RM	742			CLS 2-1/2" / 0" (T), 3/8" (C)				
DS	2-01A-313	001	J-R6 SOUTH VLV RM				CLS 3-1/8" / 15/16" (T), 1/8" (C)				
DS	2-01A-317	001	SOUTH VLV RM	769			CLS 2-1/2" / 7/8" (T), 1/8" (C)				
DS	2-01A-340	001	AZ160	771			CLS 3-3/8" / 1/16" (T), 11/16" (C)				
CS	2-01A-342N	001	AZ176	767	N/A		CLS 7.5 INC / +1.83" / -.08"				
CS	2-01A-342S	001	AZ176	767	N/A		CLS 7.5 INC / +1.83" / -.08"				
DS	2-01A-343N	001	AZ175	761			CLS 3-1/2" / 4.03" (T), 1.61" (C)				
DS	2-01A-343S	001	AZ175	761			CLS 3-1/2" / 4.03" (T), 1.61" (C)				

Attachment 19
(Page 2 of 37)

DYNAMIC SNUBBERS, VARIABLE SPRINGS AND CONSTANT SPRINGS 250° (245°-255°) PLATEAU DATA

Date _____

TYPE SUPT.	SUPPORT IDENTIFIER	SYS	LOCATION	ELEV.	SERIAL NO.	TEMP °F	SET POINT / MOVEMENT	SCALE READING	PERFORMER INIT/ DATE	VERIFIER INIT/ DATE	COMMENTS
VS	2-01A-344	001	AZ171	744	N/A		CLS 13,438# / +0" / -1/8" (NOR), +0" / -1/8" (MAX)				
DS	2-01A-348	001	NORTH VLV RM	737			CLS 3.35" / .03" (T), .73" (C)				
DS	2-01A-349	001	NORTH VLV RM	741			CLS 1" / .11" (T), .005" (C)				
DS	2-01A-350	001	NORTH VLV RM	755			CLS 3" / 1.12" (T), .05" (C)				
DS	2-01A-355	001	NORTH VLV RM	769			CLS 2-1/2" / .81" (T), .05" (C)				
DS	2-01A-380	001	AZ196	770			CLS 3-3/4" / 1/16" (T), 3/4" (C)				
DS	2-01A-381	001	AZ183	722			CLS 2-1/2" / 15/16" (T), 1/16" (C)				
CS	2-01A-382N	001	AZ182	770	N/A		CLS 7.5 INC / +1.93" / -.06"				
CS	2-01A-382S	001	AZ182	770	N/A		CLS 7.5 INC / +1.93" / -.06"				
DS	2-01A-383N	001	AZ183	759			CLS 3-1/2" / .03" (T),1.42" (C)				
DS	2-01A-383S	001	AZ183	759			CLS 2-1/2" / .03" (T), 1.42" (C)				
VS	2-01A-384E	001	AZ184	738	N/A		CLS 7,179# / +1/4" / -1/16" (NOR), +3/8" / -1/16" (MAX)				
VS	2-01A-384W	001	AZ184	738	N/A		CLS 7,179# / +1/4" / -1/16" (NOR), +3/8" / -1/16" (MAX)				
VS	2-01A-386	001	NORTH VLV RM	737	N/A		CLS 21,001 / +.04" / -.82" (NOR), +1.5" / -.82" (MAX)				
DS	2-01A-387	001	NORTH VLV RM	737			CLS 3" / .06" (T), 1.33" (C)				
DS	2-01A-389N	001	NORTH VLV RM	734			CLS 3.69" / .66" (T), 1.11" (C)				
DS	2-01A-389S	001	NORTH VLV RM	734			CLS 3.69" / .66" (T), 1.11" (C)				
VS	2-01A-389N	001	NORTH VLV RM	737	N/A		CLS 17,572# / +.03" / -.61" (NOR), +1.12" / -.61" (MAX)				
VS	2-01A-389S	001	NORTH VLV RM	737	N/A		CLS 12,131# / +.03" / -.61" (NOR), +1.12" / -.61" (MAX)				

Attachment 19
(Page 3 of 37)

DYNAMIC SNUBBERS, VARIABLE SPRINGS AND CONSTANT SPRINGS 250° (245°-255°) PLATEAU DATA

Date _____

TYPE SUPT.	SUPPORT IDENTIFIER	SYS	LOCATION	ELEV.	SERIAL NO.	TEMP °F	SET POINT / MOVEMENT	SCALE READING	PERFORMER INIT/ DATE	VERIFIER INIT/ DATE	COMMENTS
DS	2-01A-391	001	NORTH VLV RM	741			CLS 2” / 7/32” (T), 1/32” (C)				
DS	2-01A-392	001	NORTH VLV RM	756			CLS 3-3/4” / 1-5/8” (T), 1/16” (C)				
DS	2-01A-397	001	NORTH VLV RM	769			CLS 2-1/2” / .08” (T), 1.81” (C)				
CS	2-01A-422N	001	AZ357	767	N/A		CLS 9 INC / +1.86” / -.05”				
CS	2-01A-422S	001	AZ357	767	N/A		CLS 9 INC / +1.86” / -.05”				
DS	2-01A-423N	001	AZ357	760			CLS 3-3/4” / 1/16” (T), 1-1/2” (C)				
DS	2-01A-423S	001	AZ357	760			CLS 3-3/4” / 1/16” (T), 1-1/2” (C)				
DS	2-01A-424	001	AZ357	745			CLS 3” / 13/16” (T), 1/16” (C)				
VS	2-01A-425E	001	AZ356	737	N/A		CLS 6,685# / +.15” (NOR), +.38” / -.07” (MAX)				
VS	2-01A-425W	001	AZ356	737	N/A		CLS 6,685# / +.15” (NOR), +.38” / -.07” (MAX)				
VS	2-01A-427	001	SOUTH VLV RM	753	N/A		CLS 17,875# / +.04” / -.79” (NOR), +.85” / -.17” (MAX)				
DS	2-01A-428	001	SOUTH VLV RM	737			CLS 3-1/8” / 7/16” (T), 0” (C)				
DS	2-01A-429N	001	SOUTH VLV RM	732			CLS 3-3/4” / 1/16” (T), 3/16” (C)				
DS	2-01A-429S	001	SOUTH VLV RM	732			CLS 3-3/4” / 1/16” (T), 3/16” (C)				
VS	2-01A-431	001	SOUTH VLV RM	737	N/A		CLS 23,297# / +1/32” / -3/8” (NOR), +1/32” / -3/8” (MAX)				
DS	2-01A-435	001	SOUTH VLV RM	755			CLS 3-7/16" / .06" (T), 1.28" (C)				
DS	2-01A-439	001	SOUTH VLV RM	769			CLS 2-1/2" / 1/16" (T), 1-7/16" (C)				
DS	47A400-16	001	T-T16	737			CLS 11.5” / 0” (T), 11” (C)				
DS	47A400-17	001	N-T16	732			CLS 3” / 8-1/2” (T), 0” (C)				
DS	47A400-18	001	K-T14	722			CLS 3” / 5/16” (T), 0” (C)				

Attachment 19
(Page 4 of 37)

DYNAMIC SNUBBERS, VARIABLE SPRINGS AND CONSTANT SPRINGS 250° (245°-255°) PLATEAU DATA

Date _____

TYPE SUPT.	SUPPORT IDENTIFIER	SYS	LOCATION	ELEV.	SERIAL NO.	TEMP °F	SET POINT / MOVEMENT	SCALE READING	PERFORMER INIT/ DATE	VERIFIER INIT/ DATE	COMMENTS
DS	47A400-19	001	K-T13	722			CLS 5” / 0” (T), 3-5/8” (C)				
DS	47A400-20	001	J-T13	718			CLS 4” / 0” (T), 1-5/8” (C)				
DS	47A400-21	001	K-T13	722			CLS 1” / 3-9/16” (T), 0” (C)				
DS	47A400-22T	001	K-T13	722			CLS 4-1/4” / 0” (T), 2” (C)				
DS	47A400-22B	001	K-T13	722			CLS 3-1/4” / 0” (T), 2” (C)				
DS	47A400-23	001	N-T16	732			CLS 1-5/8” / 8-13/16” (T), 0” (C)				
DS	47A400-24T	001	T-T16	737			CLS 1-1/8” / 10-1/4” (T), 0” (C)				
DS	47A400-24B	001	T-T16	737			CLS 1-1/8” / 10-1/4” (T), 0” (C)				
DS	47A400-25T	001	M-T15	723			CLS 9/16” / 4-13/16” (T), 0” (C)				
DS	47A400-25B	001	M-T15	723			CLS 9/16” / 4-13/16” (T), 0” (C)				
DS	47A400-26	001	J-T12	718			CLS 3-1/2” / 0” (T), 1-1/2” (C)				
DS	47A400-27	001	M-T15	722			CLS 1/2” / 4-13/16” (T), 0” (C)				
DS	47A400-28	001	J-T12	726			CLS 2-1/2”” / 15/16” (T), 0” (C)				
DS	47A400-29	001	J-T12	726			CLS 2” / 1” (T), 0” (C)				
DS	47A400-30T	001	J-T10	718			CLS 4” / 0” (T), 1-13/16+” (C)				
DS	47A400-30B	001	J-T10	718			CLS 4” / 0” (T), 1-13/16” (C)				
CS	01A-2MS-V007N	001	M-T15	727	N/A		CLS 6,238# / 1-3/8” (DOWN)				
CS	01A-2MS-V007S	001	M-T15	727	N/A		CLS 6,238# / 1-3/8” (DOWN)				
CS	01A-2MS-V008N	001	M-T14	727	N/A		CLS 6,960# / 1-7/8” (DOWN)				
CS	01A-2MS-V008S	001	M-T14	727	N/A		CLS 6,960# / 1-7/8” (DOWN)				
CS	01A-2MS-V009N	001	M-T13	727	N/A		CLS 7,242# / 2-1/2” (DOWN)				
CS	01A-2MS-V009S	001	M-T13	727	N/A		CLS 7,242# / 2-1/2” (DOWN)				
CS	01A-2MS-V010E	001	K-T12	727	N/A		CLS 7,135# / 2-5/8” (DOWN)				
CS	01A-2MS-V010W	001	K-T12	727	N/A		CLS 7,135# / 2-5/8” (DOWN)				

Attachment 19
(Page 5 of 37)

DYNAMIC SNUBBERS, VARIABLE SPRINGS AND CONSTANT SPRINGS 250° (245°-255°) PLATEAU DATA

Date _____

TYPE SUPT.	SUPPORT IDENTIFIER	SYS	LOCATION	ELEV.	SERIAL NO.	TEMP °F	SET POINT / MOVEMENT	SCALE READING	PERFORMER INIT/ DATE	VERIFIER INIT/ DATE	COMMENTS
VS	01A-2MS-V011E	001	K-T12	725	N/A		CLS 4,615# / 2-9/16” (DOWN)				
VS	01A-2MS-V011W	001	K-T12	725	N/A		CLS 4,615# / 2-9/16” (DOWN)				
VS	01A-2MS-V012E	001	J-T12	725	N/A		CLS 4,781# / 2-1/2” (DOWN)				
VS	01A-2MS-V012W	001	J-T12	725	N/A		CLS 4,781# / 2-1/2” (DOWN)				
CS	01A-2MS-V027E	001	M-T16	727	N/A		CLS 6,580# / 1-1/16” (DOWN)				
CS	01A-2MS-V027W	001	M-T16	727	N/A		CLS 6,580# / 1-1/16” (DOWN)				
CS	01A-2MS-V028N	001	K-T15	727	N/A		CLS 6,271# / 1-13/16” (DOWN)				
CS	01A-2MS-V028S	001	K-T15	727	N/A		CLS 6,271# / 1-13/16” (DOWN)				
CS	01A-2MS-V029N	001	K-T14	727	N/A		CLS 5,073# / 2-9/16” (DOWN)				
CS	01A-2MS-V029S	001	K-T14	727	N/A		CLS 5,073# / 2-9/16” (DOWN)				
CS	01A-2MS-V030N	001	K-T13	727	N/A		CLS 4,894# / 2-15/16” (DOWN)				
CS	01A-2MS-V030S	001	K-T13	727	N/A		CLS 4,894# / 2-15/16” (DOWN)				
CS	01A-2MS-V031E	001	K-T13	727	N/A		CLS 6,730# / 3” (DOWN)				
CS	01A-2MS-V031W	001	K-T13	727	N/A		CLS 6,730# / 3” (DOWN)				
VS	01A-2MS-V032E	001	J-T13	725	N/A		CLS 7,171 / 2-5/8” (DOWN)				
VS	01A-2MS-V032W	001	J-T13	725	N/A		CLS 7,171 / 2-5/8” (DOWN)				
CS	01A-2MS-V047E	001	M-T16	727	N/A		CLS 7,785# / 1-3/16” (DOWN)				
CS	01A-2MS-V047W	001	M-T16	727	N/A		CLS 7,785# / 1-3/16” (DOWN)				
CS	01A-2MS-V048N	001	K-T15	727	N/A		CLS 7,400# / 2-1/16” (DOWN)				
CS	01A-2MS-V048S	001	K-T15	727	N/A		CLS 7,400# / 2-1/16” (DOWN)				
CS	01A-2MS-V049N	001	K-T14	727	N/A		CLS 4,309# / 2-1/16” (DOWN)				
CS	01A-2MS-V049S	001	K-T14	727	N/A		CLS 4,309# / 2-1/16” (DOWN)				
CS	01A-2MS-V050N	001	K-T14	727	N/A		CLS 3,710# / 3” (DOWN)				
CS	01A-2MS-V050S	001	K-T14	727	N/A		CLS 3,710# / 3” (DOWN)				

Attachment 19
(Page 6 of 37)

DYNAMIC SNUBBERS, VARIABLE SPRINGS AND CONSTANT SPRINGS 250° (245°-255°) PLATEAU DATA

Date _____

TYPE SUPT.	SUPPORT IDENTIFIER	SYS	LOCATION	ELEV.	SERIAL NO.	TEMP °F	SET POINT / MOVEMENT	SCALE READING	PERFORMER INIT/ DATE	VERIFIER INIT/ DATE	COMMENTS
CS	01A-2MS-V051E	001	K-T13	727	N/A		CLS 6,181# / 3-1/16" (DOWN)				
CS	01A-2MS-V051W	001	K-T13	727	N/A		CLS 6,181# / 3-1/16" (DOWN)				
VS	01A-2MS-V052E	001	J-T13	725	N/A		CLS 5,396# / 2-5/8" (DOWN)				
VS	01A-2MS-V052W	001	J-T13	725	N/A		CLS 5,396# / 2-5/8" (DOWN)				
CS	01A-2MS-V059N	001	M-T15	727	N/A		CLS 6,363# / 1-1/8" (DOWN)				
CS	01A-2MS-V059S	001	M-T15	727	N/A		CLS 6,363# / 1-1/8" (DOWN)				
CS	01A-2MS-V060N	001	M-T14	727	N/A		CLS 6,775# / 1-3/4" (DOWN)				
CS	01A-2MS-V060S	001	M-T14	727	N/A		CLS 6,775# / 1-3/4" (DOWN)				
CS	01A-2MS-V061N	001	M-T12	727	N/A		CLS 8,158# / 2-3/16" (DOWN)				
CS	01A-2MS-V061S	001	M-T12	727	N/A		CLS 8,158# / 2-3/16" (DOWN)				
CS	01A-2MS-V062E	001	M-T12	727	N/A		CLS 9,549# / 2-7/16" (DOWN)				
CS	01A-2MS-V062N	001	M-T12	727	N/A		CLS 9,549# / 2-7/16" (DOWN)				
VS	01A-2MS-V063E	001	K-T12	725	N/A		CLS 5,731# / 2-1/2" (DOWN)				
VS	01A-2MS-V063W	001	K-T12	725	N/A		CLS 5,731# / 2-1/2" (DOWN)				
VS	01A-2MS-V064E	001	J-T12	725	N/A		CLS 2,676# / 2-3/8" (DOWN)				
VS	01A-2MS-V064W	001	J-T12	725	N/A		CLS 2,676# / 2-3/8" (DOWN)				
VS	01A-2MS-V065	001	J-T13	727	N/A		CLS 22,564# / 2-5/8" (DOWN)				
VS	01A-2MS-V066	001	J-T12	727	N/A		CLS 28,401# / 2-5/8" (DOWN)				
VS	01A-2MS-V067	001	J-T11	727	N/A		CLS 9,925# / 2-1/4" (DOWN)				
VS	01A-2MS-V068	001	J-T10	727	N/A		CLS 8,977# / 2" (DOWN)				
VS	01A-2MS-V069	001	H-T10	727	N/A		CLS 9,104# / 1-1/2" (DOWN)				
VS	01A-2MS-V070	001	H-T10	753	N/A		CLS 11,165# / 1" (DOWN)				
VS	01A-2MS-V071	001	H-T10	753	N/A		CLS 16,404# / 1/2" (DOWN)				
VS	01A-2MS-V072	001	G-T10	753	N/A		CLS 8,860 / 3/32" (UP)				

Attachment 19
(Page 7 of 37)

DYNAMIC SNUBBERS, VARIABLE SPRINGS AND CONSTANT SPRINGS 250° (245°-255°) PLATEAU DATA

Date _____

TYPE SUPT.	SUPPORT IDENTIFIER	SYS	LOCATION	ELEV.	SERIAL NO.	TEMP °F	SET POINT / MOVEMENT	SCALE READING	PERFORMER INIT/ DATE	VERIFIER INIT/ DATE	COMMENTS
VS	01A-2MS-V073	001	F-T10	753	N/A		CLS 8,336# / 1/2" (UP)				
VS	01A-2MS-V074	001	F-T10	753	N/A		CLS 2,317# / 3/4" (UP)				
VS	01A-2MS-V075	001	F-T10	721	N/A		CLS 1,660# / 7/16" (UP)				
VS	01A-2MS-V075	001	F-T10	721	N/A		CLS 1,660# / 7/16" (UP)				
VS	01A-2MS-V076	001	F-T11	725	N/A		CLS 1,792# / 3/16" (UP)				
VS	01A-2MS-V077	001	F-T10	720	N/A		CLS 1,609# / 5/16" (UP)				
VS	01A-2MS-V077	001	F-T10	720	N/A		CLS 1,609# / 5/16" (UP)				
VS	01A-2MS-V078	001	F-T11	725	N/A		CLS 1,880# / 5/16" (UP)				
VS	01A-2MS-V079	001	G-T10	721	N/A		CLS 1,565# / 1/4" (UP)				
VS	01A-2MS-V079	001	G-T10	721	N/A		CLS 1,565# / 1/4" (UP)				
VS	01A-2MS-V080	001	G-T11	725	N/A		CLS 1,805# / 3/16" (UP)				
VS	01A-2MS-V081	001	G-T10	721	N/A		CLS 1,500# / 1/8" (UP)				
VS	01A-2MS-V081	001	G-T10	721	N/A		CLS 1,500# / 1/8" (UP)				
VS	01A-2MS-V082	001	G-T11	725	N/A		CLS 1,810# / 3/16" (UP)				
VS	01A-2MS-V083	001	G-T10	721	N/A		CLS 1,426# / 1/4" (DN)				
VS	01A-2MS-V083	001	G-T10	721	N/A		CLS 1,426# / 1/4" (DN)				
VS	01A-2MS-V084	001	G-T11	724	N/A		CLS 1,719# / 3/16" (UP)				
VS	01A-2MS-V085	001	G-T10	721	N/A		CLS 1,290# / 3/8" (DN)				
VS	01A-2MS-V085	001	G-T10	721	N/A		CLS 1,290# / 3/8" (DN)				
VS	01A-2MS-V086	001	G-T11	727	N/A		CLS 1,928# / 3/16" (UP)				
VS	01A-2MS-V087	001	G-T10	721	N/A		CLS 1,290# / 3/8" (DN)				
VS	01A-2MS-V087	001	G-T10	721	N/A		CLS 1,290# / 3/8" (DN)				
VS	01A-2MS-V088	001	G-T11	727	N/A		CLS 1,933# / 3/16" (UP)				
VS	01A-2MS-V089	001	G-T10	721	N/A		CLS 1,261# / 3/8" (DN)				

Attachment 19
(Page 8 of 37)

DYNAMIC SNUBBERS, VARIABLE SPRINGS AND CONSTANT SPRINGS 250° (245°-255°) PLATEAU DATA

Date _____

TYPE SUPT.	SUPPORT IDENTIFIER	SYS	LOCATION	ELEV.	SERIAL NO.	TEMP °F	SET POINT / MOVEMENT	SCALE READING	PERFORMER INIT/ DATE	VERIFIER INIT/ DATE	COMMENTS
VS	01A-2MS-V089	001	G-T10	721	N/A		CLS 1,261# / 3/8” (DN)				
VS	01A-2MS-V090	001	G-T11	724	N/A		CLS 1,733# / 3/16” (UP)				
VS	01A-2MS-V091	001	H-T10	721	N/A		CLS 1,263# / 1/2” (DN)				
VS	01A-2MS-V091	001	H-T10	721	N/A		CLS 1,263# / 1/2” (DN)				
VS	01A-2MS-V092	001	H-T11	724	N/A		CLS 1,710# / 3/16” (UP)				
VS	01A-2MS-V093	001	H-T10	721	N/A		CLS 1,081# / 5/8” (DN)				
VS	01A-2MS-V093	001	H-T10	721	N/A		CLS 1,081# / 5/8” (DN)				
VS	01A-2MS-V094	001	H-T11	727	N/A		CLS 2,135# / 3/16” (UP)				
VS	01A-2MS-V095	001	H-T10	721	N/A		CLS 1,196# / 3/4” (DN)				
VS	01A-2MS-V095	001	H-T10	721	N/A		CLS 1,196# / 3/4” (DN)				
VS	01A-2MS-V096	001	H-T11	727	N/A		CLS 2,140# / 3/16” (DN)				
VS	01A-2MS-V097	001	H-T10	720	N/A		CLS 1,187# / 7/8” (DN)				
VS	01A-2MS-V097	001	H-T10	720	N/A		CLS 1,187# / 7/8” (DN)				
VS	01A-2MS-V098	001	H-T11	724	N/A		CLS 1,717# / 3/16” (UP)				

Attachment 19
(Page 9 of 37)

DYNAMIC SNUBBERS, VARIABLE SPRINGS AND CONSTANT SPRINGS 250° (245°-255°) PLATEAU DATA

Date _____

TYPE SUPT	SUPPORT IDENTIFIER	SYS	LOCATION	ELEV	SERIAL NO.	TEMP °F	SET POINT / MOVEMENT	SCALE READING	PERFORMER INIT/ DATE	VERIFIER INIT/ DATE	COMMENTS
(STEP 6.9[2.2]) During Performance of 2-PTI-003A-03											
Main Feedwater Line to Steam Generator #1											
DS	2-03A-205	003	U-A15	731			CLS 2-5/16” / 1-7/16” (T), 0 (C)				
Main Feedwater Line to Steam Generator #2											
DS	2-03A-244	003	AZ172	731			CLS 3-1/2” / 1-1/4” (T), 1/4” (C)				
DS	2-03A-248	003	AZ165	731			CLS 4” / 1/16” (T), 1-1/8” (C)				
Main Feedwater Line to Steam Generator #3											
DS	2-03A-285	003	CRANE WALL AZ188	731			CLS 2-1/2” / 2” (T), 0” (C)				
DS	2-03A-289	003	AZ185	731			CLS 5” / 0 (T), 3-15/16” (C)				
Main Feedwater Line to Steam Generator #4											
DS	2-03A-320	003	CRANE WALL AZ352	729			CLS 3” / 0” (T), 2-3/16” (C)				
DS	2-03A-321	003	CRANE WALL AZ352	731			CLS 3” / 7/8” (T), 1/16” (C)				
DS	2-03A-323	003	U-A14	731			CLS 2-3/16” / 1-5/8” (T), 0” (C)				
DS	2-03A-328	003	U-A15	731			CLS 3” / 3” (T), 0” (C)				

Attachment 19
(Page 10 of 37)

DYNAMIC SNUBBERS, VARIABLE SPRINGS AND CONSTANT SPRINGS 250° (245°-255°) PLATEAU DATA

Date _____

TYPE SUPT	SUPPORT IDENTIFIER	SYS	LOCATION	ELEV	SERIAL NO.	TEMP °F	SET POINT / MOVEMENT	SCALE READING	PERFORMER INIT/ DATE	VERIFIER INIT/ DATE	COMMENTS
(STEP 6.9[2.3]) During Performance of 2-PTI-003A-03											
Main Feedwater Bypass Line to Steam Generator #1											
DS	2-03A-369	003	AZ35	759			CLS 3-1/8” / 0” (T), 1-1/16” (C)				
DS	2-03A-370	003	AZ35	759			CLS 3.075” / . 72” (T), 1.149” (C)				
DS	2-03A-374E	003	S VLV RM U-6	730			CLS 1-11/16” / .63” (T), .04” (C)				
DS	2-03A-374W	003	S VLV RM U-6	730			CLS 1-11/16” / .63” (T), .04” (C)				
DS	2-03A-377	003	S VLV RM U-A15	730			CLS 2-1/4” / .03” (T), .57” (C)				
VS	2-03A-377	003	S VLV RM U-A15	730	N/A		CLS 2,431 / +.04” / -.55” (NOR), +.11” /- .62” (MAX)				
VS	2-03A-378	003	AZ35	759	N/A		CLS 1-11/16”” / .632” (T), .04” (C)				
Main Feedwater Bypass Line to Steam Generator #2											
VS	2-03A-408	003	AZ160	759	N/A		CLS 913 / 1” (UP)				
DS	2-03A-411	003	AZ120	759			CLS 3-7/16” / 0” (T), 13/16” (C)				
DS	2-03A-423	003	N VLV RM AB X-6	735			CLS 3-1/4” / .05” (T), .81” (C)				
DS	2-03A-426	003	N VLV RM AB A-8	730			CLS 3” ±1/4” / .08” (T), .16” (C)				
DS	47A401-8-20T	003	AZ163	758			CLS 2” / 1/16” (T), 9/16” (C)				
DS	47A401-8-20B	003	AZ163	758			CLS 2” / 1/16” (T), 9/16” (C)				

Attachment 19
(Page 11 of 37)

DYNAMIC SNUBBERS, VARIABLE SPRINGS AND CONSTANT SPRINGS 250° (245°-255°) PLATEAU DATA

Date _____

TYPE SUPT	SUPPORT IDENTIFIER	SYS	LOCATION	ELEV	SERIAL NO.	TEMP °F	SET POINT / MOVEMENT	SCALE READING	PERFORMER INIT/ DATE	VERIFIER INIT/ DATE	COMMENTS
(STEP 6.9[2.3]) During Performance of 2-PTI-003A-03											
Main Feedwater Bypass Line to Steam Generator #3											
DS	2-03A-455	003	AZ199	759			CLS 3-1/2” / 0” (T), 1-3/16” (C)				
DS	2-03A-468	003	AZ182	730			CLS 2-1/2” / 11/16” (T), 0” (C)				
VS	2-47A401-8-28	003	AZ210	759	N/A		CLS 988 / +1-5/16” / 0” (NOR), 1-15/16” / -5/8” (MAX)				
DS	2-47A401-8-29T	003	AZ210	759			CLS 2-1/2” / 1-1/16” (T), 1/16” (C)				
DS	2-47A401-8-29B	003	AZ210	759			CLS 2-1/2” / 1-1/16” (T), 1/16” (C)				
Main Feedwater Bypass Line to Steam Generator #4											
DS	2-03A-480	003	AZ350	761			CLS 4-1/4” / 1/8” (T), 1-9/16” (C)				
VS	2-03A-481	003	AZ350	759	N/A		CLS 397# / +1” / -1/16” (NOR), +1” / -1/16” (MAX)				
DS	2-03A-482T	003	AZ350	759			CLS 2-1/4” / 9/16” (T), 0” (C)				
DS	2-03A-482B	003	AZ350	759			CLS 2-1/4” / 9/16” (T), 0” (C)				
DS	2-03A-483	003	AZ280	759			CLS 3-5/8” / 1/16” (T), 1-1/8” (C)				
DS	2-03A-485	003	AZ350	759			CLS 2-1/2” / .16” (T), .59” (C)				
DS	2-03A-497	003	S VLV RM AZ6	730			CLS 3-1/8” / 1/4” (T), 1/32” (C)				
DS	2-03A-503	003	S VLV RM AZ18	739			CLS 2-1/2” / 1/8” (T), 1/16” (C)				
DS	47A401-8-21E	003	AZ351	739			CLS 2-11/16” / 5/16” (T), 11/16” (C)				

Attachment 19
(Page 12 of 37)

DYNAMIC SNUBBERS, VARIABLE SPRINGS AND CONSTANT SPRINGS 250° (245°-255°) PLATEAU DATA

Date _____

TYPE SUPT	SUPPORT IDENTIFIER	SYS	LOCATION	ELEV	SERIAL NO.	TEMP °F	SET POINT / MOVEMENT	SCALE READING	PERFORMER INIT/ DATE	VERIFIER INIT/ DATE	COMMENTS
DS	47A401-8-21W	003	AZ351	739			CLS 2-11/16” / 5/16” (T), 11/16” (C)				
DS	2-47A427-3-57T	003	AZ331	759			CLS 1-7/8” / 0” (T), 5/8” (C)				
DS	2-47A427-3-57B	003	AZ331	759			CLS 1-7/8” / 0” (T), 5/8” (C)				

Attachment 19
(Page 13 of 37)

DYNAMIC SNUBBERS, VARIABLE SPRINGS AND CONSTANT SPRINGS 250° (245°-255°) PLATEAU DATA

Date _____

TYPE SUPT	SUPPORT IDENTIFIER	SYS	LOCATION	ELEV	SERIAL NO.	TEMP °F	SET POINT / MOVEMENT	SCALE READING	PERFORMER INIT/ DATE	VERIFIER INIT/ DATE	COMMENTS
(STEP 6.9[2.4]) During Performance of 2-PTI-003A-03											
Main Feedwater Warm Up Line for Steam Generator #1											
DS	2-03A-527	003	S VLV RM A6-M	730			CLS 7/16” / 1-5/16”” (T), -1/16” (C)				
Main Feedwater Warm Up Line for Steam Generator #3											
DS	2-03A-563	003	N VLV RM 6-A	730			CLS 4-5/8” / 1/8” (T), 4-3/16” (C)				
Main Feedwater Warm Up Line for Steam Generator #4											
DS	2-03A-582	003	S VLV RM AZ350	730			CLS 5-1/8” / 0” (T), 4-1/16” (C)				
DS	2-03A-584	003	S VLV RM 6-M	730			CLS 3” / .06” (T), 1.99” (C)				
DS	2-47A401-9-15	003	S VLV RM AZ350	730			CLS 3” / 1/16”” (T), 1-13/16” (C)				

Attachment 19
(Page 14 of 37)

DYNAMIC SNUBBERS, VARIABLE SPRINGS AND CONSTANT SPRINGS 250° (245°-255°) PLATEAU DATA

Date _____

TYPE SUPT	SUPPORT IDENTIFIER	SYS	LOCATION	ELEV	SERIAL NO.	TEMP °F	SET POINT / MOVEMENT	SCALE READING	PERFORMER INIT/ DATE	VERIFIER INIT/ DATE	COMMENTS
(STEP 6.9[2.5]) During Performance of 2-PTI-003B-05 Section 6.10 (TD) and Section 6.14 (MD)											
Auxiliary Feedwater From the Motor Driven Auxiliary Feed Pump 2A-A to Steam Generator #1											
VS	03B-2AFW-V047	003	T-A15 AB	702	N/A		CLS 724 /+1/16” UP (NOR), + 1/16” UP (MAX)				
DS	03B-2AFW-R155	003	S VLV RM U-6	746			CLS 1-1/2” / 3/8” (T), 1-7/16” (C)				
Auxiliary Feedwater From the Motor Driven Auxiliary Feed Pump 2A-A to Steam Generator #2											
VS	03B-2AFW-V178N	003	AZ301	750	N/A		CLS 124 / +3/8” / -1/8” (NOR), +13/16” / -9/16” (MAX)				
VS	03B-2AFW-V178S	003	AZ301	750	N/A		CLS 71 / +3/8” / -1/8” (NOR), +13/16” / -9/16” (MAX)				
VS	2-03B-80	003	AZ301	744	N/A		CLS 282# / 1/4” (UP)				
DS	2-03B-71T	003	AZ143	740			CLS 1-1/2” / .47” (T), .69” (C)				
DS	2-03B-71B	003	AZ143	740			CLS 1-1/2” / .47” (T), .69” (C)				
DS	2-03B-82	003	AZ143	727			CLS 2-1/2” / 0” (T), 1/4” (C)				
VS	2-03B-82	003	AZ143	727	N/A		CLS 612# / +0” / -1/4” (NOR), +0” / -1/4” (MAX)				
DS	2-03A-400	003	AZ144	744			CLS 2” / .67”(T), .0” (C)				
DS	2-03A-401	003	AZ143	744			CLS 2” / .85” (T), 0” (C)				
DS	2-03A-402	003	AZ143	753			CLS 3” / 0” (T), .20” (C)				
DS	2-03A-404	003	AZ144	753			CLS 4-1/2” / 0” (T), .88” (C)				
DS	2-03A-415	003	AZ144	752			CLS 3” / .73” (T), 0” (C)				

Attachment 19
(Page 15 of 37)

DYNAMIC SNUBBERS, VARIABLE SPRINGS AND CONSTANT SPRINGS 250° (245°-255°) PLATEAU DATA

Date _____

TYPE SUPT	SUPPORT IDENTIFIER	SYS	LOCATION	ELEV	SERIAL NO.	TEMP °F	SET POINT / MOVEMENT	SCALE READING	PERFORMER INIT/ DATE	VERIFIER INIT/ DATE	COMMENTS
(STEP 6.9[2.5]) During Performance of 2-PTI-003B-05 Section 6.10 (TD) and Section 6.14 (MD)											
Auxiliary Feedwater From the Motor Driven Auxiliary Feed Pump 2B-B to Steam Generator #3											
DS	2-03B-35	003	AZ301	743			CLS 2” / 5/8” (T), 1/8” (C)				
VS	47A427-6-31	003	AZ301	743	N/A		CLS 343# / +5/8” / -1/8” (NOR), +5/8” / -1/16” (MAX)				
VS	47A427-6-32	003	AZ216	730	N/A		CLS 895# / +1/8” / -9/16” (NOR), +1/16” / -9/16” (MAX)				
DS	2-03B-37	003	AZ215	741			CLS 2” / 1/8” (T), 9/16” (C)				
DS	2-03B-39	003	AZ216	730			CLS 3-1/4” / .39” (T), 0” (C)				
DS	2-03A-445	003	AZ216	753			CLS 2-3/4” / 9/16” (T), 1/16” (C)				
DS	2-03A-449	003	AZ216	754			CLS 2-11/16” / 11/16” (T), 0” (C)				
Auxiliary Feedwater From the Motor Driven Auxiliary Feed Pump 2B-B to Steam Generator #4											
VS	03B-2AFW-V177	003	U-A14 AB	753	N/A		CLS 1,247 / +3/8” / -1/16” (NOR), +3/8” / -1/16” (MAX)				
DS	03B-2AFW-R242	003	U-A14 AB	745			CLS 2-11/16” / 1/16” (T), 3/8” (C)				
DS	03B-2AFW-R171E	003	U-A14 AB	748			CLS 1-1/4” / 1/4” (T), 1/32” (C)				
DS	03B-2AFW-R171W	003	U-A14 AB	748			CLS 1-1/4” / 1/4” (T), 1/32” (C)				

Attachment 19
(Page 16 of 37)

DYNAMIC SNUBBERS, VARIABLE SPRINGS AND CONSTANT SPRINGS 250° (245°-255°) PLATEAU DATA

Date _____

TYPE SUPT	SUPPORT IDENTIFIER	SYS	LOCATION	ELEV	SERIAL NO.	TEMP °F	SET POINT / MOVEMENT	SCALE READING	PERFORMER INIT/ DATE	VERIFIER INIT/ DATE	COMMENTS
VS	2-62A-240	062	AZ110	728	N/A		CLS 813# / +1/16” / -1/16” (NOR), +1/16” / -1/16” (MAX)				
DS	2-62A-247	062	AZ81	704			CLS 4-1/4” / 1/16” (T), 11/16” (C)				
DS	2-62A-250	062	AZ54	709			CLS 1-1/4” / .44” (T), .02” (C)				
VS	2-62A-252	062	AZ54	714	N/A		CLS 510# / +1/6” / -0” (NOR), +1/16” / 0” (MAX)				
DS	2-62A-254	062	AZ50	706			CLS 1-1/8” / 1/16” (T), 1/8” (C)				
DS	2-62A-256N	062	AZ51	704			CLS 2-1/2” / .01” (T), .1” (C)				
DS	2-62A-256S	062	AZ51	704			CLS 2-1/2” / .01” (T), .1” (C)				
DS	2-62A-256V	062	AZ57	704			CLS 2” / .15” (T), .01” (C)				
VS	2-62A-258	062	AZ48	713	N/A		CLS 90# / + 3/16” / -0” (NOR), +3/16” / -0” (MAX)				
DS	2-62A-262	062	AZ47	706			CLS 1-3/16” / 1/8 (T), 1/4” (C)				
VS	2-62A-266	062	AZ46	714	N/A		CLS 60# / 1/64” (NOR), 1/64” (MAX)				
DS	2-62A-269	062	AZ46	706			CLS 2” / 1/16” (T), 1/4” (C)				
DS	2-62A-271E	062	AZ45	704			CLS 1-1/8” / 1/8” (T), 1/16” (C)				
DS	2-62A-271W	062	AZ45	704			CLS 1-1/8” / 1/8” (T), 1/16” (C)				
VS	2-62A-290	062	AZ215	705	N/A		CLS 1,114# / 1.07” (UP)				
DS	2-62A-291	062	AZ215	711			CLS 2-3/4” / 0” (T), 2-1/8” (C)				
DS	2-62A-294	062	AZ215	727			CLS 2-1/6” / 1/2” (T), 5/8” (C)				
DS	2-62A-319	062	AZ128	716			CLS 1” / 1/16” (T), 1/16” (C)				
DS	2-62A-320	062	AZ107	723			CLS 1” / 11/16” (T), 0” (C)				
CS	2-62A-346	062	AZ103	732	N/A		CLS 515# / 2-3/8”(UP)				

Attachment 19
(Page 17 of 37)

DYNAMIC SNUBBERS, VARIABLE SPRINGS AND CONSTANT SPRINGS 250° (245°-255°) PLATEAU DATA

Date _____

TYPE SUPT	SUPPORT IDENTIFIER	SYS	LOCATION	ELEV	SERIAL NO.	TEMP °F	SET POINT / MOVEMENT	SCALE READING	PERFORMER INIT/ DATE	VERIFIER INIT/ DATE	COMMENTS
DS	2-62A-357	062	AZ343	727			CLS 3/4” / 2-13/16 ” (T), 0” (C)				
DS	2-62A-358	062	AZ328	727			CLS 1/2” (+1/4”, -0”) / 3-5/8” (T), 1/16” (C)				
DS	2-62A-360	062	AZ322	727			CLS 3-3/4” / 1/2” (T), 2-7/16” (C)				
DS	2-62A-362	062	AZ322	727			CLS 2.19” / 1/8” (T), 3/8” (C)				
DS	2-62A-363	062	AZ321	726			CLS 1” / 2-1/8” (T), 0” (C)				
DS	2-62A-366	062	AZ318	727			CLS 1-1/8” / 1-13/16” (T), 1/8” (C)				
DS	2-62A-369	062	AZ128	727			CLS 1-7/8” / 0” (T), 1/2” (C)				
DS	2-62A-371	062	AZ128	728			CLS 7/8” / 1/4” (T), 0” (C)				
CS	2-62A-375	062	AZ103	734	N/A		CLS 429# / 3/32” (DOWN)				
DS	2-62A-377	062	AZ95	730			CLS 2-3/4” / 1/8” (T), 1-7/16” (C)				
DS	2-62A-382	062	AZ48	727			CLS 1-1/4” / 1-9/16” (T), 1/8” (C)				
DS	2-62A-463	062	AZ225	723			CLS 1.81” / .01” (T), 1.32” (C)				
VS	2-62A-530	062	AZ45	705	N/A		CLS 568# / +0” / -.03” (NOR), +.02” / -.05” (MAX)				
DS	2-62A-531	062	AZ44	712			CLS 3-1/2” / 1/16” (T), 5/8” (C)				
VS	2-62A-532	062	AZ52	706	N/A		CLS 460# / +1/16” / -1/16” (NOR), +1/16” / -1/16” (MAX)				
DS	2-62A-533	062	AZ50	706			CLS 5/8” / 3/16” (T), 1/16” (C)				
VS	2-62A-535	062	AZ48	705	N/A		CLS 589# / 1/8” (DOWN)				
DS	2-62A-536	062	AZ46	712			CLS 2-1/4” / 1/16” (T), 5/8” (C)				
DS	2-62A-557	062	AZ43	727			CLS 3-3/16” (+1/16”, 3/16”) / 7/16” (T), 2-3/4” (C)				
DS	2-62A-559	062	AZ43	727			CLS 3” / 1/4” (T), 1-1/2” (C)				

Attachment 19
(Page 18 of 37)

DYNAMIC SNUBBERS, VARIABLE SPRINGS AND CONSTANT SPRINGS 250° (245°-255°) PLATEAU DATA

Date _____

TYPE SUPT	SUPPORT IDENTIFIER	SYS	LOCATION	ELEV	SERIAL NO.	TEMP °F	SET POINT / MOVEMENT	SCALE READING	PERFORMER INIT/ DATE	VERIFIER INIT/ DATE	COMMENTS
DS	2-62A-561	062	AZ43	727			CLS 2” / 15/16” (T), 5/16” (C)				
VS	2-62A-562	062	AZ43	727	N/A		CLS 422 / 1/4” (UP)				
DS	2-62A-563	062	AZ43	727			CLS 1-1/2” / 13/16” (T), 0” (C)				
VS	2-62A-584	062	AZ178	730	N/A		CLS 35# / 3/8” (UP)				
DS	2-62A-589	062	AZ150	729			CLS 2-1/2” / .85” (T), .03” (C)				
VS	2-62A-621	062	AZ302	716	N/A		CLS 117/ +.02”/ -.39” (NOR) +.03”/ -.41” (MAX)				
DS	2-62A-624	062	AZ44	706			CLS 2-5/8” / 1/16” (T), 1/16" (C)				
DS	2-62A-625	062	AZ57	706			CLS 1-7/8” / 3/16” (T), 1/16” (C)				
DS	2-62A-630	062	AZ150	729			CLS 2” / 0” (T), 3/4” (C)				
VS	2-62A-637	062	AZ110	719	N/A		CLS 112# / +.09" / -0" (NOR), +.09" / 0" (MAX)				
DS	2-62A-802	062	AZ200	719			CLS 2-1/4” / 1-1/8” (T), 0” (C)				
DS	2-62A-808	062	AZ210	726			CLS 3-1/8” / 1/16” (T), 2-3/16” (C)				
DS	2-62A-809	062	AZ210	725			CLS 3-1/4” / .02” (T), 2.07” (C)				
DS	2-62A-810	062	AZ208	725			CLS 3/4” / 2-3/4” (T), 0” (C)				
DS	2-68-365	062	AZ220	704			CLS 1-1/4” / 2-13/16” (T), 0” (C)				
DS	47A406-12-79N	062	AZ48	706			CLS 2” /1/16” (T), 1/16” (C)				
DS	47A406-12-79S	062	AZ48	706			CLS 2” / 1/16” (T), 1/16” (C)				
DS	47A406-12-79W	062	AZ48	706			CLS 2” / 3/16” (T), 1/8” (C)				
DS	47A406-12-82	062	AZ43	705			CLS 2-1/8” / 1/16” (T), 3/16” (C)				
DS	2-47A406-12-89	062	AZ48	705			CLS 1” / .02” (T), .03” (C)				
DS	2-47A406-12-93N	062	AZ44	712			CLS 2-5/8” / 1/16” (T), 1/4” (C)				
DS	2-47A406-12-93S	062	AZ44	712			CLS 2-5/8” / 1/16” (T), 1/4” (C)				

Attachment 19
(Page 19 of 37)

DYNAMIC SNUBBERS, VARIABLE SPRINGS AND CONSTANT SPRINGS 250° (245°-255°) PLATEAU DATA

Date _____

TYPE SUPT	SUPPORT IDENTIFIER	SYS	LOCATION	ELEV	SERIAL NO.	TEMP °F	SET POINT / MOVEMENT	SCALE READING	PERFORMER INIT/ DATE	VERIFIER INIT/ DATE	COMMENTS
DS	2-47A406-12-94E	062	AZ44	712			CLS 4-1/8” / 1/16” (T), -3/16” (C)				
DS	2-47A406-12-94W	062	AZ44	712			CLS 4-1/8” / 1/16” (T), -3/16” (C)				
DS	2-47A406-12-97T	062	AZ326	712			CLS 4-3/8” / 1/16” (T), 1-3/8 (C)				
DS	2-47A406-12-97B	062	AZ326	712			CLS 4-1/2” / 1/16” (T), 1-3/8” (C)				
DS	2-47A406-12-98N	062	AZ53	712			CLS 2-1/2” /1/10” (T), 1-1/4” (C)				
DS	2-47A406-12-98S	062	AZ53	712			CLS 2-1/2” / 1/10” (T), 1-1/4” (C)				
DS	2-47A406-12-101	062	AZ44	712			CLS 2-7/16” / 1/16” (T), 13/16” (C)				
DS	47A406-13-56	062	AZ216	726			CLS .9” / .74”(T), .02” (C)				
DS	2-47A406-13-106	062	AZ52	727			CLS 2-7/16” / 1/16” (T), 1/8” (C)				
DS	2-47A406-14-67	062	AZ123	720			CLS 2” / 1-1/16” (T), 1/16” (C)				
VS	2-47A406-14-81	062	AZ321	728	N/A		CLS 441# / + 1/4” / -1/16” (NOR), +5/8” / -1/2” (MAX)				
DS	2-47A406-14-84	062	AZ123	726	N/A		CLS 2-1/4” / 3/16” (T), 5/16” (C)				
DS	2-47A406-14-85	062	AZ122	725	N/A		CLS 2-1/4” / 7/8” (T), 0 (C)				
DS	2-47A406-14-86	062	AZ122	725	N/A		CLS 2-1/8” / 1/8” (T), 1/8” (C)				
DS	2-47A406-14-87	062	AZ185	730	N/A		CLS 2” / 1/8” (T), 1/16” (C)				
DS	47A465-3-52	062	AZ53	712			CLS 2-1/2” / 1/32” (T), 1/4” (C)				
DS	2-47A560-38-2	062	AZ220	704			CLS 2-1/8” / 1-7/16” (T), 1/16” (C)				

Attachment 19
(Page 20 of 37)

DYNAMIC SNUBBERS, VARIABLE SPRINGS AND CONSTANT SPRINGS 250° (245°-255°) PLATEAU DATA

Date _____

TYPE SUPT	SUPPORT IDENTIFIER	SYS	LOCATION	ELEV	SERIAL NO.	TEMP °F	SET POINT / MOVEMENT	SCALE READING	PERFORMER INIT/ DATE	VERIFIER INIT/ DATE	COMMENTS
DS	2-63-001	063	AZ42	725			CLS 3-1/2” / 1/16” (T), 15/16” (C)				
VS	2-63-002	063	AZ45	728	N/A		CLS 2,431# / +15/16” / -1/16” (NOR), +11/16” / -3/8” (MAX)				
DS	2-63-005	063	AZ40	728			CLS 2-3/16” / 3/16” (T), 1/16” (C)				
DS	2-63-008	063	AZ31	718			4-1/2” / 3/8” (T), 1/16” (C)				
DS	2-63-011	063	AZ40	726			1-1/8” / 1/16” (T), 1/8” (C)				
VS	2-63-013	063	AZ34	740	N/A		CLS 1,466# / +11/16” / -1/32” (NOR), +11/16” / -1/32” (MAX)				
DS	2-63-014	063	AZ34	738			CLS 2” / 11/16” (T), 1/32” (C)				
VS	2-63-016	063	AZ18	741	N/A		CLS 262# / +1-1/8” / -3/16” (NOR), +1-1/8” / -3/16” (MAX)				
DS	2-63-018	063	AZ21	738			CLS 2” / 1-1/8” (T), 1/16” (C)				
DS	2-63-019	063	AZ16	740			CLS 2-1/2” / 1/8” (T), 1-15/16” (C)				
VS	2-63-020	063	AZ12	740	N/A		CLS 1,375 / +1-9/16” / -1/4” (NOR), +1-7/8” / -1/2” (MAX)				
DS	2-63-022	063	AZ358	740			CLS 4” / 1/4” (T), 2-3/4” (C)				
DS	2-63-023	063	AZ342	736			CLS 1-1/4” / 3/8”(T), 1/16” (C)				
DS	2-63-024	063	AZ342	740			CLS 2-3/4” / 1/8” (T),15/16” (C)				
VS	2-63-026	063	AZ320	741	N/A		CLS 1,332# / +3/4” / -0” (NOR), +13/16” / -1/16” (MAX)				

Attachment 19
(Page 21 of 37)

DYNAMIC SNUBBERS, VARIABLE SPRINGS AND CONSTANT SPRINGS 250° (245°-255°) PLATEAU DATA

Date _____

TYPE SUPT	SUPPORT IDENTIFIER	SYS	LOCATION	ELEV	SERIAL NO.	TEMP °F	SET POINT / MOVEMENT	SCALE READING	PERFORMER INIT/ DATE	VERIFIER INIT/ DATE	COMMENTS
VS	2-63-028	063	AZ308	741	N/A		CLS 1,868# / 7/8" (UP) (NOR), 7/8"(UP) (MAX)				
DS	2-63-029	063	AZ308	735			CLS 1-1/4" / 7/8" (T), 0" (C)				
DS	2-63-030	063	AZ308	738			CLS 3" / 1/4" (T), 1/16" (C)				
DS	2-63-031	063	AZ300	735			CLS 1-1/2" / 7/16" (T), 1/16" (C)				
DS	2-63-032	063	AZ300	734			CLS 2" / 13/16" (T), 1/8" (C)				
DS	2-63-035	063	AZ35	728			CLS 3" / 0" (T), 1" (C)				
DS	2-63-038E	063	AZ35	731			CLS 2-3/4" / 1/4" (T), 1/16" (C)				
DS	2-63-038W	063	AZ35	731			CLS 3-1/4" / 1/4" (T), 1/16" (C)				
DS	2-63-042	063	AZ297	734			CLS 2-3/4" / 1/2" (T), 1/16 (C)				
DS	2-63-043	063	AZ297	734			CLS 2-3/8" / 1/8" (T), 0" (C)				
DS	2-63-055	063	AZ111	741			CLS 3-5/8" / 1/8" (T), 2-1/8" (C)				
DS	2-63-062	063	AZ215	741			CLS 3-1/2" / 1/8" (T), 1-1/2" (C)				
VS	2-63-063	063	AZ218	736	N/A		CLS 2,106# / +13/16" / -0" (NOR), +13/16" / -1/16" (MAX)				
DS	2-63-064	063	AZ218	734			CLS 2-1/4" / 0" (T), 3/4" (C)				
DS	2-63-069	063	AZ215	740			CLS 1-3/8" / 1-7/16" (T), 1/16" (C)				
VS	2-63-070	063	AZ225	729	N/A		CLS 3,860# / +5/16" (UP) / -0" (DN) (NOR), +5/16" (UP) / -0" (DN) (MAX)				
DS	2-63-072	063	AZ218	725			CLS 2-1/2" / 1/16" (T), 1/8" (C)				
DS	2-63-078	063	AZ145	736			CLS 3-3/4" / 1/8"(T), 3/4" (C)				

Attachment 19
(Page 22 of 37)

DYNAMIC SNUBBERS, VARIABLE SPRINGS AND CONSTANT SPRINGS 250° (245°-255°) PLATEAU DATA

Date _____

TYPE SUPT	SUPPORT IDENTIFIER	SYS	LOCATION	ELEV	SERIAL NO.	TEMP °F	SET POINT / MOVEMENT	SCALE READING	PERFORMER INIT/ DATE	VERIFIER INIT/ DATE	COMMENTS
VS	2-63-080	063	AZ145	729	N/A		CLS 1,520# / +1/32” / -1/2” (NOR), +1/32” / -1/2” (MAX)				
DS	2-63-095N	063	AZ215	727			CLS 1-3/4” / 0” (T), 5/8” (C)				
DS	2-63-095S	063	AZ215	727			CLS 2” / 1/8” (T), 1/16” (C)				
DS	2-63-156	063	AZ300	725			CLS 2” / 1/16” (T), 11/16” (C)				
DS	2-63-161	063	AZ300	723			CLS 1-15/16” / 1/16” (T), 5/16” (C)				
DS	2-63-163	063	AZ304	722			CLS 1-1/2” / 1/16”(T), 3/16” (C)				
DS	2-63-164	063	AZ302	722			CLS 2-1/4” / 1/2” (T), 1/8” (C)				
VS	2-63-165	063	AZ302	722	N/A		CLS 66 / +1/4” / 0” (NOR), +5/16” / -1/16” (MAX)				
DS	2-63-169	063	AZ295	732			CLS 1-5/8” / 1/16” (T), 1/16” (C)				
DS	2-63-185	063	AZ42	729			CLS 2-1/2” / 1/16” (T), 1-1/8” (C)				
DS	2-63-285	063	AZ181	730			CLS 1-3/4” / 3/16” (T), 1/16” (C)				
VS	2-63-342	063	AZ188	731	N/A		CLS 2,356# / 3/8” (UP)				
DS	2-63-365	063	AZ37	727			CLS 2-7/8” / 1/16” (T), 3/4” (C)				
VS	2-63-367	063	AZ37	731	N/A		CLS 2,140# / +7/8” / -0” (NOR), +1-3/16” / -1/4” (MAX)				
VS	2-63-451	063	AZ321	725	N/A		CLS 2,900 / +3/8” / -1/16” (NOR), +3/4” / -1/2” (MAX)				
DS	2-63-453	063	AZ324	724			CLS 2-7/8” / 1/16” (T), 3/8” (C)				
DS	2-63-458	063	AZ324	723			CLS 4-1/2” / 11/16” (T), 1/16” (C)				

Attachment 19
(Page 23 of 37)

DYNAMIC SNUBBERS, VARIABLE SPRINGS AND CONSTANT SPRINGS 250° (245°-255°) PLATEAU DATA

Date _____

TYPE SUPT	SUPPORT IDENTIFIER	SYS	LOCATION	ELEV	SERIAL NO.	TEMP °F	SET POINT / MOVEMENT	SCALE READING	PERFORMER INIT/ DATE	VERIFIER INIT/ DATE	COMMENTS
DS	2-63-459	063	AZ324	718			CLS 2” / 0” (T), 7/8” (C)				
VS	2-63-466E	063	AZ324	730	N/A		CLS 148# / +1/4” / -1/16” (NOR), +1/4” / -1/16” (MAX)				
VS	2-63-466W	063	AZ324	730	N/A		CLS 160# / +1/4” / -1/16” (NOR), +1/4” / -1/16” (MAX)				
DS	2-63-520	063	AZ45	723			CLS 1-3/4” / 1-1/16” (T), 1/16” (C)				
DS	2-63-526	063	AZ45	725			CLS 3-1/16” / 5/8” (T), 1/8” (C)				
DS	2-63-528	063	AZ293	733			CLS 1” / 1/16” (T), 1/16” (C)				
DS	2-63-571	063	AZ150	729			CLS 7/8” / 9/16" (T), 1/16" (C)				
DS	2-63-573	063	AZ181	730			CLS 1-1/2” / 1/16” (T), 1/4” (C)				
DS	2-63-584	063	AZ39	732			CLS 1-5/16” / 1-1/2” (T), 1/16” (C)				
VS	2-63-588	063	AZ142	731	N/A		CLS 1,988 / -1/8” (EXT)				
DS	2-63-592	063	AZ344	741			CLS 1-1/2” / 2-5/16” (T), 1/2” (C)				
DS	47A432-1-8T	063	U-A12	688			CLS 3-7/16” / 1/8” (T), 7/8” (C)				
DS	47A432-1-8B	063	U-A12	688			CLS 3-7/16” / 1/8” (T), 7/8” (C)				
DS	47A432-3-6	063	AZ37	728			CLS 2-3/4” / 1/8” (T), 3/8” (C)				
DS	47A432-3-8	063	AZ142	727			CLS 3” / 0” (T), 3/8” (C)				
DS	2-47A432-3-13	063	AZ35	737			CLS 2-1/2” / 3/4” (T), 1/16” (C)				
DS	2-47A432-3-14	063	AZ38	727			CLS 1-3/4” / 1/16” (T), 11/16” (C)				
DS	2-47A432-3-15	063	AZ142	728			CLS 2-1/4” / 3/4” (T), 1/16” (C)				
DS	2-47A432-3-16	063	AZ157	725			CLS 4” / 3/8” (T), 3/8” (C)				

Attachment 19
(Page 24 of 37)

DYNAMIC SNUBBERS, VARIABLE SPRINGS AND CONSTANT SPRINGS 250° (245°-255°) PLATEAU DATA

Date _____

TYPE SUPT	SUPPORT IDENTIFIER	SYS	LOCATION	ELEV	SERIAL NO.	TEMP °F	SET POINT / MOVEMENT	SCALE READING	PERFORMER INIT/ DATE	VERIFIER INIT/ DATE	COMMENTS
DS	47A435-3-8	063	U-A13	706			CLS 1-1/8” / 1/4” (T), 1/16” (C)				
DS	2-47A435-3-18T	063	U-C13	719			CLS 3” / 3/16” (T), 3/8” (C)				
DS	2-47A435-3-18B	063	U-C13	719			CLS 3” / 3/16” (T), 3/8” (C)				
DS	2-47A435-12-6	063	AZ291	721			CLS 2” / 1/16” (T), 3/8” (C)				
DS	47A435-12-62	063	AZ324	731			CLS 5/8” / 5/16” (T), 1/16” (C)				
DS	47A435-12-89	063	AZ324	728			CLS 1-1/4” / 3/16” (T), 1/16” (C)				
DS	2-47A435-12-93	063	AZ300	723			CLS 5/8” / 1-5/16” (T), 1/16” (C)				
DS	47A435-13-60	063	AZ32	723			CLS 1” / 7/8” (T), 0” (C)				
VS	47A435-13-73	063	AZ347	740	N/A		CLS 1,125# / +11/16” / -3/16” (NOR), + 7/8” / -5/16” (MAX)				
DS	2-47A435-13-117	063	AZ45	721			CLS 1-3/4” / 1/16” (T), 1” (C)				
DS	2-47A435-13-118	063	AZ45	718			CLS 2” / 3/16” (T),1/16” (C)				
VS	2-47A435-13-119	063	AZ45	718	N/A		CLS 91# / +1/16” / -1/16” (NOR), +1/4” / -1/4” (MAX)				
VS	47A435-14-61	063	AZ125	721	N/A		CLS 1,715# / +3/16” (UP) (NOR), 1/2” (UP) (MAX)				
DS	47A435-14-80N	063	AZ146	725			CLS 1-1/2" / 1/16" (T), 5/16" (C)				
DS	47A435-14-80S	063	AZ146	725			CLS 1-1/2" / 1/16" (T), 5/16" (C)				
VS	47A435-14-81	063	AZ145	730	N/A		CLS 175 / +.01” / -.34” (NOR), +.02” / -.40” (MAX)				

Attachment 19
(Page 25 of 37)

DYNAMIC SNUBBERS, VARIABLE SPRINGS AND CONSTANT SPRINGS 250° (245°-255°) PLATEAU DATA

Date _____

TYPE SUPT	SUPPORT IDENTIFIER	SYS	LOCATION	ELEV	SERIAL NO.	TEMP °F	SET POINT / MOVEMENT	SCALE READING	PERFORMER INIT/ DATE	VERIFIER INIT/ DATE	COMMENTS
VS	47A435-14-84	063	AZ150	730	N/A		CLS 48# / +0 UP", -3/16" DOWN (NOR), +0 UP", -3/16" DOWN (MAX)				
DS	2-47A435-14-107	063	AZ143	727			CLS 1-1/4" / 1/8" (T), 3/8" (C)				
DS	2-47A435-14-109	063	AZ199	721			CLS 1-11/16" / 0" (T), 7/8" (C)				
VS	47A435-14-110	063	AZ132	720	N/A		CLS 200# / +3/16" / -0" (NOR), +3/8" / -1/16" (MAX)				
VS	47A435-15-58	063	AZ228	720	N/A		CLS 154# / +.02" / -.01" (NOR), +.34" / -.32" (MAX)				
DS	47A435-15-70	063	AZ232	718			CLS 2-3/8"/ 3/8" (T), 1/16" (C)				
DS	47A435-15-79	063	AZ219	724			CLS 1-1/2" / 0" (T), 3/4" (C)				
DS	47A435-15-97	063	AZ218	723			CLS 3" / 1/16" (T), 11/16" (C)				
DS	47A435-16-17	063	AZ286	729			CLS 1-1/8" / 1/16" (T), 3/16" (C)				
DS	47A435-16-21E	063	AZ292	733			CLS 2-7/16" / 1/16" (T), 1/16" (C)				
DS	47A435-16-21W	063	AZ292	733			CLS 3-1/8" / 1/16" (T), 1/16" (C)				
DS	47A435-16-31	063	AZ285	731			CLS 2 1/4" / 1/16" (T), 3/16" (C)				
DS	47A435-16-33N	063	AZ289	731			CLS 3" / 1/16" (T), 1/16" (C)				
DS	47A435-16-33S	063	AZ289	731			CLS 1" / 1/16" (T), 1/4" (C)				
DS	47A435-16-34N	063	AZ282	726			CLS 2-7/8" / 1/16" (T), 3/16" (C)				
DS	47A435-16-34S	063	AZ282	726			CLS 2" / 0" (T), 1/32" (C)				
DS	47A435-16-47	063	AZ289	733			CLS 2-3/4" / 1/16" (T), 3/16" (C)				
DS	47A435-16-50S	063	AZ298	724			CLS 2" / 1/16" (T), 5/16" (C)				

Attachment 19
(Page 26 of 37)

DYNAMIC SNUBBERS, VARIABLE SPRINGS AND CONSTANT SPRINGS 250° (245°-255°) PLATEAU DATA

Date _____

TYPE SUPT	SUPPORT IDENTIFIER	SYS	LOCATION	ELEV	SERIAL NO.	TEMP °F	SET POINT / MOVEMENT	SCALE READING	PERFORMER INIT/ DATE	VERIFIER INIT/ DATE	COMMENTS
DS	47A435-16-50E	063	AZ298	724			CLS 2” / 1/8” (T), 3/8” (C)				
DS	47A435-16-51	063	AZ291	729			CLS 2” / 3/16” (T), 0” (C)				
DS	47A435-16-55E	063	AZ295	732			CLS 2-7/8” / 1/16” (T), 1/8” (C)				
DS	47A435-16-55S	063	AZ295	732			CLS 2” / 1/8” (T), 1/4” (C)				
DS	47A435-16-62N	063	AZ294	725			CLS 1-3/16” / 1/16” (T), 0” (C)				
DS	47A435-16-62S	063	AZ294	725			CLS 1-3/16” / 1/16” (T), 0” (C)				
DS	47A435-16-65	063	AZ296	719			CLS 2-5/8” / 0” (T), 3/8” (C)				
DS	47A435-16-66	063	AZ296	719			CLS 2” / 1/8” (T), 1/4” (C)				
DS	2-47A435-16-73	063	AZ284	724			CLS 1-15/16” / 1/8” (T), 1/16” (C)				
VS	2-47A435-16-75	063	AZ284	724	N/A		CLS 155# / -1/16” (NOR), -1/16” (MAX)				
DS	2-47A435-16-76	063	AZ284	729			CLS 2” / 1/16” (T), 3/16” (C)				
DS	2-47A435-16-77	063	AZ285	729			CLS 2-3/16” / 1/16” (T), 3/8” (C)				
DS	2-47A435-16-78	063	AZ285	729			CLS 2” / 1/8” (T), 3/16” (C)				
VS	2-47A435-16-79	063	AZ298	731	N/A		CLS 210# / +5/16”, -1/16” (NOR) +3/8”, -1/16” (MAX)				
VS	47A437-1-25	063	T-A10	690	N/A		CLS 2,683# / +1/16” / -0” (NOR), +1/16” ‘ -1/16” (MAX)				
DS	2-47A437-1-62	063	U-A12	688			CLS 3-1/2” / 1/4” (T), 2-5/16” (C)				
DS	2-47A437-2-4	063	U-A11	681			CLS 2-7/8” / 5/16” (T), 1/16” (C)				
DS	47A437-2-22	063	T-A11	684			CLS 2” / 0” (T), 1/4” (C)				

Attachment 19
(Page 27 of 37)

DYNAMIC SNUBBERS, VARIABLE SPRINGS AND CONSTANT SPRINGS 250° (245°-255°) PLATEAU DATA

Date _____

TYPE SUPT	SUPPORT IDENTIFIER	SYS	LOCATION	ELEV	SERIAL NO.	TEMP °F	SET POINT / MOVEMENT	SCALE READING	PERFORMER INIT/ DATE	VERIFIER INIT/ DATE	COMMENTS
DS	47A437-2-24	063	U-A11	686			CLS 1-1/2" / 3/16"(T), 1/16" (C)				
VS	47A437-2-28N	063	U-A11	676	N/A		CLS 7,141# / +.06" / -.31 (NOR), +.06" / -.31" (MAX)				
VS	47A437-2-28S	063	U-A11	676	N/A		CLS 7,141# / +.06" / -.31 (NOR), +.06" / -.31" (MAX)				
VS	47A437-2-29E	063	U-A10	681	N/A		CLS 1,341# / +1/16" / -0" (NOR), +1/16" / 0" (MAX)				
VS	47A437-2-29W	063	U-A10	681	N/A		CLS 1509# / +1/16" / -0" (NOR), +1/16" / 0" (MAX)				
DS	63-2SIS-V142N	063	V-A10	687	N/A		CLS 2-1/2" / 3/16" (T), 1/4" (C)				
DS	63-2SIS-V142S	063	V-A10	687	N/A		CLS 2-1/2" / 3/16" (T), 1/4" (C)				
VS	63-2SIS-V143N	063	V-A11	690	N/A		CLS 978# / +1/4" / 0" (NOR), +1/8" / -3/16" (MAX)				
VS	63-2SIS-V143S	063	V-A11	690	N/A		CLS 1,775# / +1/4" / 0" (NOR), +1/8" / -3/16" (MAX)				
VS	63-2SIS-V145	063	V-A11	691	N/A		CLS 2,177# / +1/8" / -1/4" (NOR), +1/16" / -7/16" (MAX)				
DS	63-2SIS-R155	063	V-A12	688			CLS 3.4" / 0" (T), 13/16" (C)				
VS	63-2SIS-V166N	063	U-A10	689	N/A		CLS 773 / +.21" / -.05" (NOR), +.22" / -.06" (MAX)				
VS	63-2SIS-V166S	063	U-A10	689	N/A		CLS 773 / +.21" / -.05" (NOR), +.22" / -.06" (MAX)				

Attachment 19
(Page 28 of 37)

DYNAMIC SNUBBERS, VARIABLE SPRINGS AND CONSTANT SPRINGS 250° (245°-255°) PLATEAU DATA

Date _____

TYPE SUPT	SUPPORT IDENTIFIER	SYS	LOCATION	ELEV	SERIAL NO.	TEMP °F	SET POINT / MOVEMENT	SCALE READING	PERFORMER INIT/ DATE	VERIFIER INIT/ DATE	COMMENTS
DS	63-2SIS-R168N	063	U-A10	689			CLS 2-5/8” / 1/32” (T), 5/16” (C)				
DS	63-2SIS-R168S	063	U-A10	689			CLS 2-5/8” / 1/32” (T), 5/16” (C)				
DS	63-2SIS-R170	063	U-A12	687			CLS 3-1/2” / 0” (T), 1-9/16” (C)				
DS	63-2SIS-R211	063	V-A12	688			CLS 2-1/2” / 9/16” (T), 0” (C)				
DS	63-2SIS-R214	063	V-A11	686			CLS 3” / .89” (T), 0” (C)				
DS	63-2SIS-R216	063	U-A11	684			CLS 2-3/4” / 0” (T), 1/8” (C)				
DS	63-2SIS-R240N	063	U-A12	686			CLS 1” / 13/16”” (T), 0” (C)				
DS	63-2SIS-R240S	063	U-A12	686			CLS 2” / 13/16”” (T), 0” (C)				
DS	63-2SIS-R242	063	U-A12	686			CLS 2-5/8” / 11/16” (T), 0” (C)				
DS	63-2SIS-R245	063	T-A11	686			CLS 2-1/2” / 0” (T), 1/8” (C)				
DS	63-2SIS-R276	063	T-A11	689			CLS 2” / 5/16” (T), 0” (C)				

Attachment 19
(Page 29 of 37)

DYNAMIC SNUBBERS, VARIABLE SPRINGS AND CONSTANT SPRINGS 250° (245°-255°) PLATEAU DATA

Date _____

TYPE SUPT	SUPPORT IDENTIFIER	SYS	LOCATION	ELEV	SERIAL NO.	TEMP °F	SET POINT / MOVEMENT	SCALE READING	PERFORMER INIT/ DATE	VERIFIER INIT/ DATE	COMMENTS
VS	2-68-001	068	AZ147	724	N/A		CLS 5,695# / +3/8” / -0” (NOR), +5/8” / -1/4” (MAX)				
VS	2-68-005	068	AZ92	725	N/A		CLS 4,614 / +0” / -1-1/2” (NOR), +0” / -2-1/4” (MAX)				
CS	2-68-011N	068	AZ104	787	N/A		CLS 1.8 INC / +2.70” / -.11” (MAX)				
CS	2-68-011S	068	AZ104	787	N/A		CLS 1.8 INC / +2.70” / -.11” (MAX)				
DS	2-68-020	068	AZ104	733			CLS 2-11/16” / 5/8” (T), 1/16” (C)				
DS	2-68-021	068	AZ110	729			CLS 2-7/8” / 1/16” (T), 9/16” (C)				
DS	2-68-023E	068	AZ109	736			CLS 1-7/8” / 1/16” (T), 15/16” (C)				
DS	2-68-023W	068	AZ109	736			CLS 1-7/8” / 1/16” (T), 15/16” (C)				
DS	2-68-024	068	AZ108	736			CLS 2-1/8” / 1/16” (T), 7/8” (C)				
VS	2-68-025	068	AZ110	733	N/A		CLS 1,113# / +1/16” /-7/16” (NOR), +1/16 / -7/16” (MAX)				
VS	2-68-028	068	AZ104	754	N/A		CLS 758# / +.95” / -.05” (NOR), +1.29” / -.34” (MAX)				
DS	2-68-030	068	AZ110	732			CLS 3” / 1/4” (T), 3/8” (C)				
DS	2-68-031	068	AZ104	733			CLS 2-1/16” / 0” (T), 9/16” (C)				
DS	2-68-032	068	AZ98	736			CLS 1.81” / 0” (T), 1-3/16” (C)				
DS	2-68-033	068	AZ98	736			CLS 2-1/8” / 5/16” (T), 3/8” (C)				
DS	2-68-034	068	AZ98	733			CLS 1-1/8” / 1” (T), 1/16” (C)				
DS	2-68-036	068	AZ98	733			CLS 1-15/16” / 1/4” (T), 3/4” (C)				

Attachment 19
(Page 30 of 37)

DYNAMIC SNUBBERS, VARIABLE SPRINGS AND CONSTANT SPRINGS 250° (245°-255°) PLATEAU DATA

Date _____

TYPE SUPT	SUPPORT IDENTIFIER	SYS	LOCATION	ELEV	SERIAL NO.	TEMP °F	SET POINT / MOVEMENT	SCALE READING	PERFORMER INIT/ DATE	VERIFIER INIT/ DATE	COMMENTS
DS	2-68-042	068	AZ104	735			CLS 3-1/4” / 1/16” (T), 13/16” (C)				
VS	2-68-043	068	AZ108	735	N/A		CLS 678# / +.06” / -.32” (NOR), +.06” / -.32” (MAX)				
DS	2-68-044	068	AZ108	734			CLS 1-7/16” (+1/16”, -3/8”) / 5/8” (T), 1/16” (C)				
DS	2-68-050	068	AZ104	733			CLS 1-3/4” / 9/16”” (T), 1/8” (C)				
DS	2-68-053	068	AZ98	733			CLS 2-3/8” / 1/8” (T), 1-1/16” (C)				
DS	2-68-093	068	AZ100	784			CLS 3/4” / 4-5/8” (T), 1/8” (C)				
CS	2-68-094	068	AZ99	791	N/A		CLS 3/4” / 4-1/2” (UP)				
DS	2-68-096	068	AZ104	784			CLS 11/16” (± 1/8) / 3-13/16” (T), 1/8” (C)				
VS	2-68-334	068	AZ47	707	N/A		CLS 153# / +.01” / -.20” (NOR), +.11” / -.26” (MAX)				
DS	2-68-348	068	AZ142	706			CLS 162# . +.03” / -.63” (NOM), +.03” / -.75” (MAX)				
VS	2-68-379	068	AZ323	707	N/A		CLS 124# / 3/4” (DOWN)				
VS	2-68-382	068	AZ321	708	N/A		CLS 157# / .52” (DOWN (NOR), .78” (DOWN) (MAX)				
DS	2-68-404E	068	AZ82	754			CLS 5-3/8” / 1/16” (T), 4-7/8” (C)				
DS	2-68-404W	068	AZ82	754			CLS 5-3/8” / 1/16” (T), 4-7/8” (C)				
DS	2-68-406E	068	AZ87	747			CLS 3” / 1/4” (T), 1/4” (C)				
DS	2-68-406W	068	AZ87	747			CLS 3” / 1/4” (T), 1/4” (C)				

Attachment 19
(Page 31 of 37)

DYNAMIC SNUBBERS, VARIABLE SPRINGS AND CONSTANT SPRINGS 250° (245°-255°) PLATEAU DATA

Date _____

TYPE SUPT	SUPPORT IDENTIFIER	SYS	LOCATION	ELEV	SERIAL NO.	TEMP °F	SET POINT / MOVEMENT	SCALE READING	PERFORMER INIT/ DATE	VERIFIER INIT/ DATE	COMMENTS
DS	2-68-412N	068	AZ99	786			CLS 1-3/4” / 1/8” (T), 5/16” (C)				
DS	2-68-412S	068	AZ99	788			CLS 1-3/4” / 1/8” (T), 5/16” (C)				
DS	2-68-415N	068	AZ97	787			CLS 2” / 7/8” (T), 1/16” (C)				
DS	2-68-415S	068	AZ97	787			CLS 2” / 1-1/16” (T), 1/16” (C)				
DS	2-68-427	068	AZ97	778			CLS 2-3/4” / 1/8” (T), 3/8” (C)				
DS	2-68-429E	068	AZ104	761			CLS 2-9/16” / 1/4” (T), 9/16” (C)				
DS	2-68-429W	068	AZ104	761			CLS 2-9/16” / 1/4” (T), 9/16” (C)				
DS	2-47A465-1-108	068	AZ110	729			CLS 2-3/4” /1/16” (T), 1/2” (C)				
DS	47A465-2-23	068	AZ100	776			CLS 3-7/8” / 0” (T), 3-3/16” (C)				
DS	47A465-2-41	068	AZ104	775			CLS 1-1/2” / 1/16” (T), 1/4” (C)				
CS	47A465-2-42	068	AZ104	775	N/A		CLS 3/4” / 2.96” (UP)				
DS	47A465-2-46	068	AZ97	758			CLS 3” / 0” (T), 2-1/8” (C)				
VS	47A465-2-47	068	AZ100	758	N/A		CLS 130# / 2.10” (NOR), 2.12” (MAX)				
VS	2-47A465-2-81	068	AZ99	737	N/A		CLS 50# / +1/4” / -0” (NOR), +5/16” / -1/16” (MAX)				
DS	47A465-4-7E	068	AZ104	736			CLS 1-3/4 / 0” (T), 3/8” (C)				
DS	47A465-4-7W	068	AZ104	736			CLS 1-3/8 ” / 1/16” (T), 3/16” (C)				
DS	47A465-8-60	068	AZ335	742			CLS 2-1/2” / 1/16” (T), 7/16” (C)				
DS	47A465-8-61	068	AZ65	742			CLS 2-11/16” / 1/16” (T), 1-11/16” (C)				

Attachment 19
(Page 32 of 37)

DYNAMIC SNUBBERS, VARIABLE SPRINGS AND CONSTANT SPRINGS 250° (245°-255°) PLATEAU DATA

Date _____

TYPE SUPT	SUPPORT IDENTIFIER	SYS	LOCATION	ELEV	SERIAL NO.	TEMP °F	SET POINT / MOVEMENT	SCALE READING	PERFORMER INIT/ DATE	VERIFIER INIT/ DATE	COMMENTS
DS	47A465-8-63	068	AZ145	742			CLS 2-3/4” / 1/16” (T), 1-1/2” (C)				
VS	47A465-8-73	068	AZ40	752	N/A		CLS 144# / +2-1/6” / -1/16” (NOR), +2-7/16” / -7/16” (MAX)				
VS	2-47A465-8-97	068	AZ111	742	N/A		CLS 100 / +3/4” / -1/16” (NOR), +7/8” / -3/16” (MAX)				

Attachment 19
(Page 33 of 37)

DYNAMIC SNUBBERS, VARIABLE SPRINGS AND CONSTANT SPRINGS 250° (245°-255°) PLATEAU DATA

Date _____

SAFETY INJECTION PUMP B-B DISCHARGE TO LOOP #4 HOT LEG											
TYPE SUPT.	SUPPORT IDENTIFIER	SYS	LOCATION	ELEV.	SERIAL NO.	TEMP °F	SET POINT / MOVEMENT	SCALE READING	PERFORMER INIT/ DATE	VERIFIER INIT/ DATE	COMMENTS
DS	2-74-015	074	AZ0	724			CLS 1-3/4" / .55" (T), .02" (C)				
DS	2-74-017	074	AZ0	722			CLS 1" / 3/16" (T), 0" (C)				

FROM LOOP #4 HOT LEG TO RHR PUMPS A AND B SUCTION											
TYPE SUPT.	SUPPORT IDENTIFIER	SYS	LOCATION	ELEV.	SERIAL NO.	TEMP °F	SET POINT / MOVEMENT	SCALE READING	PERFORMER INIT/ DATE	VERIFIER INIT/ DATE	COMMENTS
COMMON											
VS	2-74-022	074	AZ354	716	N/A		CLS 10,515# / +1/16 / -3/4" (NOR), +1/16" / -3/4" (MAX)				
DS	47A432-3-4	074	AZ349	707			CLS 3-3/4" / 7/16" (T), 1/16" (C)				
DS	2-74-010	074	AZ354	707			CLS 3" / 7/16" (T), 1/16" (C)				
DS	2-74-011	074	AZ361	707			CLS 4" / .06" (T), 1.64" (C)				
VS	2-74-012	074	AZ347	707	N/A		CLS 2,340# / +.03" / -.66"(NOR), +.17" / -.83" (MAX)				
VS	2-47A432-3-17	074	AZ354	707	N/A		CLS 3,482# / +1/16" / -3/8" (NOR) +1/16" / -3/8" (MAX)				
DS	2-74-008	074	AZ354	707			CLS 4-1/4" / 7/16" (T), 1-1/16" (C)				
DS	47A432-2-2	063	V-A11	718			CLS 3" / 0" (T), 13/16" (C)				

Attachment 19
(Page 34 of 37)

DYNAMIC SNUBBERS, VARIABLE SPRINGS AND CONSTANT SPRINGS 250° (245°-255°) PLATEAU DATA

Date _____

FROM LOOP #4 HOT LEG TO RHR PUMPS A AND B SUCTION											
TYPE SUPT.	SUPPORT IDENTIFIER	SYS	LOCATION	ELEV.	SERIAL NO.	TEMP °F	SET POINT / MOVEMENT	SCALE READING	PERFORMER INIT/ DATE	VERIFIER INIT/ DATE	COMMENTS
VS	63-2SIS-V179	063	V-A11	697	N/A		CLS 2,519# / +1/4" / -1/16" (NOR), +5/16" / -5/32" (MAX)				
VS	63-2SIS-V180	063	V-A11	723	N/A		CLS 4,306# / +1/8" / -0" (NOR), +3/16" / -3/16" (MAX)				
DS	2-47A432-6-17	063	V-A11	693			CLS 2-5/8" / 1/16" (T), 3/16" (C)				
FROM LOOP #4 HOT LEG TO RHR PUMP A SUCTION											
VS	63-2SIS-V134	063	V-A11	678	N/A		CLS 4,360# / +1/8" / -0" (NOR), +1/16" / -1/4" (MAX)				
VS	63-2SIS-V136	063	V-A11	676	N/A		CLS 2,082# / -5/32" (NOR), +1/32, -3/16" (MAX)				
VS	63-2SIS-V139NW	063	V-A10	677	N/A		CLS 263# / +0" / -.13" (NOR), +0" / -.14" (MAX)				
VS	63-2SIS-V139SE	063	V-A10	677	N/A		CLS 331# / +0" / -.13" (NOR), +0" / -.14" (MAX)				

Attachment 19
(Page 35 of 37)

DYNAMIC SNUBBERS, VARIABLE SPRINGS AND CONSTANT SPRINGS 250° (245°-255°) PLATEAU DATA

Date _____

FROM LOOP #4 HOT LEG TO RHR PUMPS A AND B SUCTION											
FROM LOOP #4 HOT LEG TO RHR PUMP B SUCTION											
TYPE SUPT.	SUPPORT IDENTIFIER	SYS	LOCATION	ELEV.	SERIAL NO.	TEMP °F	SET POINT / MOVEMENT	SCALE READING	PERFORMER INIT/ DATE	VERIFIER INIT/ DATE	COMMENTS
VS	63-2SIS-V158	063	U-A11	678	N/A		CLS 6,135 / +1/16” / -0” (NOR), +1/8” / -1/8” (MAX)				
VS	63-2SIS-V163N	063	U-A10	677	N/A		CLS 1,850# / -1/16” (NOR), +0” / -1/8” (MAX)				
VS	63-2SIS-V163S	063	U-A10	677	N/A		CLS 1,244# / -1/16” (NOR), +0” / -1/8” (MAX)				

Attachment 19
(Page 36 of 37)

DYNAMIC SNUBBERS, VARIABLE SPRINGS AND CONSTANT SPRINGS 250° (245°-255°) PLATEAU DATA

Date _____

RHR PUMP A-A DISCHARGE TO RHR HEAT EXCHANGER A											
TYPE SUPT.	SUPPORT IDENTIFIER	SYS	LOCATION	ELEV.	SERIAL NO.	TEMP °F	SET POINT / MOVEMENT	SCALE READING	PERFORMER INIT/ DATE	VERIFIER INIT/ DATE	COMMENTS
DS	74-2RHR-R096	074	V-A11	688			CLS 3” / 1/16” (T), 1” (C)				
RHR HEAT EXCHANGER A DISCHANGE TO COLD LEG INJECTION											
DS	74-2RHR-R014N	074	W-A10	732			CLS 1” / 0” (T), 1/4” (C)				
DS	74-2RHR-R014S	074	W-A10	732			CLS 1” / 0” (T), 1/4” (C)				
VS	74-2RHR-V015N	074	W-A10	733	N/A		CLS 661# / +1/4”, -1/16” (NOR), +1/4” / -1/16” (MAX)				
VS	74-2RHR-V015S	074	W-A10	733	N/A		CLS 661# / +1/4”, -1/16” (NOR), +1/4” / -1/16” (MAX)				
DS	74-2RHR-R028	074	V-A11	732			CLS 4-1/16” / 1/16” (T), 1/16” (C)				
VS	74-2RHR-V121	074	W-A10	719	N/A		CLS 711# / +1/16”, -0” (NOR), +1/16”, -0” (MAX)				
DS	74-2RHR-R216	074	W-A11	728			CLS 2” / 1/2” (T), 1/16” (C)				
DS	74-2RHR-R220	074	W-A11	729			CLS 3” / 1/16” (T), 1/8” (C)				
RHR HEAT EXCHANGER A BYPASS LINE											
DS	74-2RHR-R037	074	W-A9	730			CLS 3” / 3/8” (T), 1/16” (C)				
VS	74-2RHR-V038	074	W-A9	730	N/A		CLS 2472# / +7/16”, -1/16” (NOR), +7/16” / -1/16” (MAX)				

Attachment 19
(Page 37 of 37)

DYNAMIC SNUBBERS, VARIABLE SPRINGS AND CONSTANT SPRINGS 250° (245°-255°) PLATEAU DATA

Date _____

RHR PUMP B-B DISCHARGE TO RHR HEAT EXCHANGER B											
TYPE SUPT.	SUPPORT IDENTIFIER	SYS	LOCATION	ELEV.	SERIAL NO.	TEMP °F	SET POINT / MOVEMENT	SCALE READING	PERFORMER INIT/ DATE	VERIFIER INIT/ DATE	COMMENTS
DS	74-2RHR-R058	074	V-A11	689			CLS 2-1/2” / 1/16” (T), 1” (C)				
RHR HEAT EXCHANGER B DISCHANGE TO COLD LEG INJECTION											
VS	74-2RHR-V002	074	V-A10	729	N/A		CLS 1088# / +.31”, -.09” (NOR), +.50” / -.25” (MAX)				
DS	74-2RHR-R003E	074	V-A10	727			CLS 2” / 1/32” (T), 9/16” (C)				
DS	74-2RHR-R003W	074	V-A10	727			CLS 1-1/2” / 1/32” (T), 9/16” (C)				
DS	74-2RHR-R006	074	V-A10	721			CLS 2-1/4” / 1/4” (T), 0” (C)				
VS	74-2RHR-V011	074	V-A10	730	N/A		CLS 1624# / +7/16”, -1/8” (NOR), +5/8” / -5/16” (MAX)				
DS	74-2RHR-R230	074	W-A11	729			CLS 2-1/4” / 1/16” (T), 1/2” (C)				
DS	74-2RHR-R232	074	W-A11	729			CLS 3” / 0” (T), 7/16” (C)				
VS	2-47A435-2-2	074	V-A10	719	N/A		CLS 1478# / +1/16”, -1/16” (NOR), +1/8” / -1/8” (MAX)				
RHR HEAT EXCHANGER B BYPASS LINE											
TYPE SUPT.	SUPPORT IDENTIFIER	SYS	LOCATION	ELEV.	SERIAL NO.	TEMP °F	SET POINT / MOVEMENT	SCALE READING	PERFORMER INIT/ DATE	VERIFIER INIT/ DATE	COMMENTS
VS	74-2RHR-V041	074	V-A9	734	N/A		CLS 1509# / +9/16”, -1/16” (NOR), +11/16” / -1/16” (MAX)				

Attachment 20
(Page 1 of 37)

DYNAMIC SNUBBERS, VARIABLE SPRINGS AND CONSTANT SPRINGS 350° (345°-355°) PLATEAU DATA

Date _____

COLD LOAD SETTING (CLS) INCREMENT (INC)

TYPE SUPT.	SUPPORT IDENTIFIER	SYS	LOCATION	ELEV.	SERIAL NO.	TEMP °F	SET POINT / MOVEMENT	SCALE READING	PERFORMER INIT/ DATE	VERIFIER INIT/ DATE	COMMENTS
DS	2-01A-301	001	AZ4	773			CLS 3"/ 1-13/16" (T), 0" (C)				
CS	2-01A-302N	001	AZ5	767	N/A		CLS 8.75 INC / +2.35, - 0 INC				
CS	2-01A-302S	001	AZ5	767	N/A		CLS 8.75 INC / +2.35, - 0 INC				
DS	2-01A-303N	001	AZ4	761			CLS 3" / .011" (T), 2.365" (C)				
DS	2-01A-303S	001	AZ4	761			CLS 5-1/2" / .011" (T), 2.365" (C)				
DS	2-01A-304E	001	SOUTH VLV RM	733			CLS 1-1/2" / 11/16" (T), 13/16" (C)				
DS	2-01A-304W	001	SOUTH VLV RM	733			CLS 1-1/2" / 11/16" (T), 13/16" (C)				
VS	2-01A-305	001	AZ4	737	N/A		CLS 13,973# / 1.94" UP (NOR), 2.09" UP (MAX)				
DS	2-01A-307N	001	AZ5	703			CLS 3-5/8" / 3/8" (T), 0" (C)				
DS	2-01A-307S	001	AZ5	703			CLS 3-3/8" / 3/8" (T), 0" (C)				
DS	2-01A-308	001	SOUTH VLV RM	737			CLS 3" / .22" (T), .28" (C)				
VS	2-01A-309	001	SOUTH VLV RM	740	N/A		CLS 27,083# / +.005" / -.17" (NOR), +.23" / -.18" (MAX)				
DS	2-01A-312	001	SOUTH VLV RM	742			CLS 2-1/2" / 0" (T), 3/8" (C)				
DS	2-01A-313	001	J-R6 S VLV RM				CLS 3-1/8" / 15/16" (T), 1/8" (C)				
DS	2-01A-317	001	SOUTH VLV RM	769			CLS 2-1/2" / 7/8" (T), 1/8" (C)				
DS	2-01A-340	001	AZ160	771			CLS 3-3/8" / 1/16" (T), 11/16" (C)				
CS	2-01A-342N	001	AZ176	767	N/A		CLS 7.5 INC / +1.83" / -.08"				
CS	2-01A-342S	001	AZ176	767	N/A		CLS 7.5 INC / +1.83" / -.08"				
DS	2-01A-343N	001	AZ175	761			CLS 3-1/2" / 4.03" (T), 1.61" (C)				
DS	2-01A-343S	001	AZ175	761			CLS 3-1/2" / 4.03" (T), 1.61" (C)				

Attachment 20
(Page 2 of 37)

DYNAMIC SNUBBERS, VARIABLE SPRINGS AND CONSTANT SPRINGS 350° (345°-355°) PLATEAU DATA

Date _____

TYPE SUPT.	SUPPORT IDENTIFIER	SYS	LOCATION	ELEV.	SERIAL NO.	TEMP °F	SET POINT / MOVEMENT	SCALE READING	PERFORMER INIT/ DATE	VERIFIER INIT/ DATE	COMMENTS
VS	2-01A-344	001	AZ171	744	N/A		CLS 13,438# / +0" / -1/8" (NOR), +0" / -1/8" (MAX)				
DS	2-01A-348	001	NORTH VLV RM	737			CLS 3.35" / .03" (T), .73" (C)				
DS	2-01A-349	001	NORTH VLV RM	741			CLS 1" / .11" (T), .005" (C)				
DS	2-01A-350	001	NORTH VLV RM	755			CLS 3" / 1.12" (T), .05" (C)				
DS	2-01A-355	001	NORTH VLV RM	769			CLS 2-1/2" / .81" (T), .05" (C)				
DS	2-01A-380	001	AZ196	770			CLS 3-3/4" / 1/16" (T), 3/4" (C)				
DS	2-01A-381	001	AZ183	722			CLS 2-1/2" / 15/16" (T), 1/16" (C)				
CS	2-01A-382N	001	AZ182	770	N/A		CLS 7.5 INC / +1.93" / -.06"				
CS	2-01A-382S	001	AZ182	770	N/A		CLS 7.5 INC / +1.93" / -.06"				
DS	2-01A-383N	001	AZ183	759			CLS 3-1/2" / .03" (T),1.42" (C)				
DS	2-01A-383S	001	AZ183	759			CLS 2-1/2" / .03" (T), 1.42" (C)				
VS	2-01A-384E	001	AZ184	738	N/A		CLS 7,179# / +1/4" / -1/16" (NOR), +3/8" / -1/16" (MAX)				
VS	2-01A-384W	001	AZ184	738	N/A		CLS 7,179# / +1/4" / -1/16" (NOR), +3/8" / -1/16" (MAX)				
VS	2-01A-386	001	NORTH VLV RM	737	N/A		CLS 21,001 / +.04" / -.82" (NOR), +1.5" / -.82" (MAX)				
DS	2-01A-387	001	NORTH VLV RM	737			CLS 3" / .06" (T), 1.33" (C)				
DS	2-01A-389N	001	NORTH VLV RM	734			CLS 3.69" / .66" (T), 1.11" (C)				
DS	2-01A-389S	001	NORTH VLV RM	734			CLS 3.69" / .66" (T), 1.11" (C)				
VS	2-01A-389N	001	NORTH VLV RM	737	N/A		CLS 17,572# / +.03" / -.61" (NOR), +1.12" / -.61" (MAX)				
VS	2-01A-389S	001	NORTH VLV RM	737	N/A		CLS 12,131# / +.03" / -.61" (NOR), +1.12" / -.61" (MAX)				

Attachment 20
(Page 3 of 37)

DYNAMIC SNUBBERS, VARIABLE SPRINGS AND CONSTANT SPRINGS 350° (345°-355°) PLATEAU DATA

Date _____

TYPE SUPT.	SUPPORT IDENTIFIER	SYS	LOCATION	ELEV.	SERIAL NO.	TEMP °F	SET POINT / MOVEMENT	SCALE READING	PERFORMER INIT/ DATE	VERIFIER INIT/ DATE	COMMENTS
DS	2-01A-391	001	NORTH VLV RM	741			CLS 2” / 7/32” (T), 1/32” (C)				
DS	2-01A-392	001	NORTH VLV RM	756			CLS 3-3/4” / 1-5/8” (T), 1/16” (C)				
DS	2-01A-397	001	NORTH VLV RM	769			CLS 2-1/2” / .08” (T), 1.81” (C)				
CS	2-01A-422N	001	AZ357	767	N/A		CLS 9 INC / +1.86” / -.05”				
CS	2-01A-422S	001	AZ357	767	N/A		CLS 9 INC / +1.86” / -.05”				
DS	2-01A-423N	001	AZ357	760			CLS 3-3/4” / 1/16” (T), 1-1/2” (C)				
DS	2-01A-423S	001	AZ357	760			CLS 3-3/4” / 1/16” (T), 1-1/2” (C)				
DS	2-01A-424	001	AZ357	745			CLS 3” / 13/16” (T), 1/16” (C)				
VS	2-01A-425E	001	AZ356	737	N/A		CLS 6,685# / +.15” (NOR), +.38” / -.07” (MAX)				
VS	2-01A-425W	001	AZ356	737	N/A		CLS 6,685# / +.15” (NOR), +.38” / -.07” (MAX)				
VS	2-01A-427	001	SOUTH VLV RM	753	N/A		CLS 17,875# / +.04” / -.79” (NOR), +.85” / -.17” (MAX)				
DS	2-01A-428	001	SOUTH VLV RM	737			CLS 3-1/8” / 7/16” (T), 0” (C)				
DS	2-01A-429N	001	SOUTH VLV RM	732			CLS 3-3/4” / 1/16” (T), 3/16” (C)				
DS	2-01A-429S	001	SOUTH VLV RM	732			CLS 3-3/4” / 1/16” (T), 3/16” (C)				
VS	2-01A-431	001	SOUTH VLV RM	737	N/A		CLS 23,297# / +1/32” / -3/8” (NOR), +1/32” / -3/8” (MAX)				
DS	2-01A-435	001	SOUTH VLV RM	755			CLS 3-7/16" / .06" (T), 1.28" (C)				
DS	2-01A-439	001	SOUTH VLV RM	769			CLS 2-1/2" / 1/16" (T), 1-7/16" (C)				
DS	47A400-16	001	T-T16	737			CLS 11.5” / 0” (T), 11” (C)				
DS	47A400-17	001	N-T16	732			CLS 3” / 8-1/2” (T), 0” (C)				

Attachment 20
(Page 4 of 37)

DYNAMIC SNUBBERS, VARIABLE SPRINGS AND CONSTANT SPRINGS 350° (345°-355°) PLATEAU DATA

Date _____

TYPE SUPT.	SUPPORT IDENTIFIER	SYS	LOCATION	ELEV.	SERIAL NO.	TEMP °F	SET POINT / MOVEMENT	SCALE READING	PERFORMER INIT/ DATE	VERIFIER INIT/ DATE	COMMENTS
DS	47A400-18	001	K-T14	722			CLS 3” / 5/16” (T), 0” (C)				
DS	47A400-19	001	K-T13	722			CLS 5” / 0” (T), 3-5/8” (C)				
DS	47A400-20	001	J-T13	718			CLS 4” / 0” (T), 1-5/8” (C)				
DS	47A400-21	001	K-T13	722			CLS 1” / 3-9/16” (T), 0” (C)				
DS	47A400-22T	001	K-T13	722			CLS 4-1/4” / 0” (T), 2” (C)				
DS	47A400-22B	001	K-T13	722			CLS 3-1/4” / 0” (T), 2” (C)				
DS	47A400-23	001	N-T16	732			CLS 1-5/8” / 8-13/16” (T), 0” (C)				
DS	47A400-24T	001	T-T16	737			CLS 1-1/8” / 10-1/4” (T), 0” (C)				
DS	47A400-24B	001	T-T16	737			CLS 1-1/8” / 10-1/4” (T), 0” (C)				
DS	47A400-25T	001	M-T15	723			CLS 9/16” / 4-13/16” (T), 0” (C)				
DS	47A400-25B	001	M-T15	723			CLS 9/16” / 4-13/16” (T), 0” (C)				
DS	47A400-26	001	J-T12	718			CLS 3-1/2” / 0” (T), 1-1/2” (C)				
DS	47A400-27	001	M-T15	722			CLS 1/2” / 4-13/16” (T), 0” (C)				
DS	47A400-28	001	J-T12	726			CLS 2-1/2”” / 15/16” (T), 0” (C)				
DS	47A400-29	001	J-T12	726			CLS 2” / 1” (T), 0” (C)				
DS	47A400-30T	001	J-T10	718			CLS 4” / 0” (T), 1-13/16+” (C)				
DS	47A400-30B	001	J-T10	718			CLS 4” / 0” (T), 1-13/16” (C)				
CS	01A-2MS-V007N	001	M-T15	727	N/A		CLS 6,238# / 1-3/8” (DOWN)				
CS	01A-2MS-V007S	001	M-T15	727	N/A		CLS 6,238# / 1-3/8” (DOWN)				
CS	01A-2MS-V008N	001	M-T14	727	N/A		CLS 6,960# / 1-7/8” (DOWN)				
CS	01A-2MS-V008S	001	M-T14	727	N/A		CLS 6,960# / 1-7/8” (DOWN)				
CS	01A-2MS-V009N	001	M-T13	727	N/A		CLS 7,242# / 2-1/2” (DOWN)				
CS	01A-2MS-V009S	001	M-T13	727	N/A		CLS 7,242# / 2-1/2” (DOWN)				
CS	01A-2MS-V010E	001	K-T12	727	N/A		CLS 7,135# / 2-5/8” (DOWN)				

Attachment 20
(Page 5 of 37)

DYNAMIC SNUBBERS, VARIABLE SPRINGS AND CONSTANT SPRINGS 350° (345°-355°) PLATEAU DATA

Date _____

TYPE SUPT.	SUPPORT IDENTIFIER	SYS	LOCATION	ELEV.	SERIAL NO.	TEMP °F	SET POINT / MOVEMENT	SCALE READING	PERFORMER INIT/ DATE	VERIFIER INIT/ DATE	COMMENTS
CS	01A-2MS-V010W	001	K-T12	727	N/A		CLS 7,135# / 2-5/8” (DOWN)				
VS	01A-2MS-V011E	001	K-T12	725	N/A		CLS 4,615# / 2-9/16” (DOWN)				
VS	01A-2MS-V011W	001	K-T12	725	N/A		CLS 4,615# / 2-9/16” (DOWN)				
VS	01A-2MS-V012E	001	J-T12	725	N/A		CLS 4,781# / 2-1/2” (DOWN)				
VS	01A-2MS-V012W	001	J-T12	725	N/A		CLS 4,781# / 2-1/2” (DOWN)				
CS	01A-2MS-V027E	001	M-T16	727	N/A		CLS 6,580# / 1-1/16” (DOWN)				
CS	01A-2MS-V027W	001	M-T16	727	N/A		CLS 6,580# / 1-1/16” (DOWN)				
CS	01A-2MS-V028N	001	K-T15	727	N/A		CLS 6,271# / 1-13/16” (DOWN)				
CS	01A-2MS-V028S	001	K-T15	727	N/A		CLS 6,271# / 1-13/16” (DOWN)				
CS	01A-2MS-V029N	001	K-T14	727	N/A		CLS 5,073# / 2-9/16” (DOWN)				
CS	01A-2MS-V029S	001	K-T14	727	N/A		CLS 5,073# / 2-9/16” (DOWN)				
CS	01A-2MS-V030N	001	K-T13	727	N/A		CLS 4,894# / 2-15/16” (DOWN)				
CS	01A-2MS-V030S	001	K-T13	727	N/A		CLS 4,894# / 2-15/16” (DOWN)				
CS	01A-2MS-V031E	001	K-T13	727	N/A		CLS 6,730# / 3” (DOWN)				
CS	01A-2MS-V031W	001	K-T13	727	N/A		CLS 6,730# / 3” (DOWN)				
VS	01A-2MS-V032E	001	J-T13	725	N/A		CLS 7,171 / 2-5/8” (DOWN)				
VS	01A-2MS-V032W	001	J-T13	725	N/A		CLS 7,171 / 2-5/8” (DOWN)				
CS	01A-2MS-V047E	001	M-T16	727	N/A		CLS 7,785# / 1-3/16” (DOWN)				
CS	01A-2MS-V047W	001	M-T16	727	N/A		CLS 7,785# / 1-3/16” (DOWN)				
CS	01A-2MS-V048N	001	K-T15	727	N/A		CLS 7,400# / 2-1/16” (DOWN)				
CS	01A-2MS-V048S	001	K-T15	727	N/A		CLS 7,400# / 2-1/16” (DOWN)				
CS	01A-2MS-V049N	001	K-T14	727	N/A		CLS 4,309# / 2-1/16” (DOWN)				
CS	01A-2MS-V049S	001	K-T14	727	N/A		CLS 4,309# / 2-1/16” (DOWN)				
CS	01A-2MS-V050N	001	K-T14	727	N/A		CLS 3,710# / 3” (DOWN)				

Attachment 20
(Page 6 of 37)

DYNAMIC SNUBBERS, VARIABLE SPRINGS AND CONSTANT SPRINGS 350° (345°-355°) PLATEAU DATA

Date _____

TYPE SUPT.	SUPPORT IDENTIFIER	SYS	LOCATION	ELEV.	SERIAL NO.	TEMP °F	SET POINT / MOVEMENT	SCALE READING	PERFORMER INIT/ DATE	VERIFIER INIT/ DATE	COMMENTS
CS	01A-2MS-V050S	001	K-T14	727	N/A		CLS 3,710# / 3” (DOWN)				
CS	01A-2MS-V051E	001	K-T13	727	N/A		CLS 6,181# / 3-1/16” (DOWN)				
CS	01A-2MS-V051W	001	K-T13	727	N/A		CLS 6,181# / 3-1/16” (DOWN)				
VS	01A-2MS-V052E	001	J-T13	725	N/A		CLS 5,396# / 2-5/8” (DOWN)				
VS	01A-2MS-V052W	001	J-T13	725	N/A		CLS 5,396# / 2-5/8” (DOWN)				
CS	01A-2MS-V059N	001	M-T15	727	N/A		CLS 6,363# / 1-1/8” (DOWN)				
CS	01A-2MS-V059S	001	M-T15	727	N/A		CLS 6,363# / 1-1/8” (DOWN)				
CS	01A-2MS-V060N	001	M-T14	727	N/A		CLS 6,775# / 1-3/4” (DOWN)				
CS	01A-2MS-V060S	001	M-T14	727	N/A		CLS 6,775# / 1-3/4” (DOWN)				
CS	01A-2MS-V061N	001	M-T12	727	N/A		CLS 8,158# / 2-3/16” (DOWN)				
CS	01A-2MS-V061S	001	M-T12	727	N/A		CLS 8,158# / 2-3/16” (DOWN)				
CS	01A-2MS-V062E	001	M-T12	727	N/A		CLS 9,549# / 2-7/16” (DOWN)				
CS	01A-2MS-V062N	001	M-T12	727	N/A		CLS 9,549# / 2-7/16” (DOWN)				
VS	01A-2MS-V063E	001	K-T12	725	N/A		CLS 5,731# / 2-1/2” (DOWN)				
VS	01A-2MS-V063W	001	K-T12	725	N/A		CLS 5,731# / 2-1/2” (DOWN)				
VS	01A-2MS-V064E	001	J-T12	725	N/A		CLS 2,676# / 2-3/8” (DOWN)				
VS	01A-2MS-V064W	001	J-T12	725	N/A		CLS 2,676# / 2-3/8” (DOWN)				
VS	01A-2MS-V065	001	J-T13	727	N/A		CLS 22,564# / 2-5/8” (DOWN)				
VS	01A-2MS-V066	001	J-T12	727	N/A		CLS 28,401# / 2-5/8” (DOWN)				
VS	01A-2MS-V067	001	J-T11	727	N/A		CLS 9,925# / 2-1/4” (DOWN)				
VS	01A-2MS-V068	001	J-T10	727	N/A		CLS 8,977# / 2” (DOWN)				
VS	01A-2MS-V069	001	H-T10	727	N/A		CLS 9,104# / 1-1/2” (DOWN)				
VS	01A-2MS-V070	001	H-T10	753	N/A		CLS 11,165# / 1” (DOWN)				
VS	01A-2MS-V071	001	H-T10	753	N/A		CLS 16,404# / 1/2” (DOWN)				

Attachment 20
(Page 7 of 37)

DYNAMIC SNUBBERS, VARIABLE SPRINGS AND CONSTANT SPRINGS 350° (345°-355°) PLATEAU DATA

Date _____

TYPE SUPT.	SUPPORT IDENTIFIER	SYS	LOCATION	ELEV.	SERIAL NO.	TEMP °F	SET POINT / MOVEMENT	SCALE READING	PERFORMER INIT/ DATE	VERIFIER INIT/ DATE	COMMENTS
VS	01A-2MS-V072	001	G-T10	753	N/A		CLS 8,860 / 3/32” (UP)				
VS	01A-2MS-V073	001	F-T10	753	N/A		CLS 8,336# / 1/2” (UP)				
VS	01A-2MS-V074	001	F-T10	753	N/A		CLS 2,317# / 3/4” (UP)				
VS	01A-2MS-V075	001	F-T10	721	N/A		CLS 1,660# / 7/16” (UP)				
VS	01A-2MS-V075	001	F-T10	721	N/A		CLS 1,660# / 7/16” (UP)				
VS	01A-2MS-V076	001	F-T11	725	N/A		CLS 1,792# / 3/16” (UP)				
VS	01A-2MS-V077	001	F-T10	720	N/A		CLS 1,609# / 5/16” (UP)				
VS	01A-2MS-V077	001	F-T10	720	N/A		CLS 1,609# / 5/16” (UP)				
VS	01A-2MS-V078	001	F-T11	725	N/A		CLS 1,880# / 5/16” (UP)				
VS	01A-2MS-V079	001	G-T10	721	N/A		CLS 1,565# / 1/4” (UP)				
VS	01A-2MS-V079	001	G-T10	721	N/A		CLS 1,565# / 1/4” (UP)				
VS	01A-2MS-V080	001	G-T11	725	N/A		CLS 1,805# / 3/16” (UP)				
VS	01A-2MS-V081	001	G-T10	721	N/A		CLS 1,500# / 1/8” (UP)				
VS	01A-2MS-V081	001	G-T10	721	N/A		CLS 1,500# / 1/8” (UP)				
VS	01A-2MS-V082	001	G-T11	725	N/A		CLS 1,810# / 3/16” (UP)				
VS	01A-2MS-V083	001	G-T10	721	N/A		CLS 1,426# / 1/4” (DN)				
VS	01A-2MS-V083	001	G-T10	721	N/A		CLS 1,426# / 1/4” (DN)				
VS	01A-2MS-V084	001	G-T11	724	N/A		CLS 1,719# / 3/16” (UP)				
VS	01A-2MS-V085	001	G-T10	721	N/A		CLS 1,290# / 3/8” (DN)				
VS	01A-2MS-V085	001	G-T10	721	N/A		CLS 1,290# / 3/8” (DN)				
VS	01A-2MS-V086	001	G-T11	727	N/A		CLS 1,928# / 3/16” (UP)				
VS	01A-2MS-V087	001	G-T10	721	N/A		CLS 1,290# / 3/8” (DN)				
VS	01A-2MS-V087	001	G-T10	721	N/A		CLS 1,290# / 3/8” (DN)				
VS	01A-2MS-V088	001	G-T11	727	N/A		CLS 1,933# / 3/16” (UP)				

Attachment 20
(Page 8 of 37)

DYNAMIC SNUBBERS, VARIABLE SPRINGS AND CONSTANT SPRINGS 350° (345°-355°) PLATEAU DATA

Date _____

TYPE SUPT.	SUPPORT IDENTIFIER	SYS	LOCATION	ELEV.	SERIAL NO.	TEMP °F	SET POINT / MOVEMENT	SCALE READING	PERFORMER INIT/ DATE	VERIFIER INIT/ DATE	COMMENTS
VS	01A-2MS-V089	001	G-T10	721	N/A		CLS 1,261# / 3/8” (DN)				
VS	01A-2MS-V089	001	G-T10	721	N/A		CLS 1,261# / 3/8” (DN)				
VS	01A-2MS-V090	001	G-T11	724	N/A		CLS 1,733# / 3/16” (UP)				
VS	01A-2MS-V091	001	H-T10	721	N/A		CLS 1,263# / 1/2” (DN)				
VS	01A-2MS-V091	001	H-T10	721	N/A		CLS 1,263# / 1/2” (DN)				
VS	01A-2MS-V092	001	H-T11	724	N/A		CLS 1,710# / 3/16” (UP)				
VS	01A-2MS-V093	001	H-T10	721	N/A		CLS 1,081# / 5/8” (DN)				
VS	01A-2MS-V093	001	H-T10	721	N/A		CLS 1,081# / 5/8” (DN)				
VS	01A-2MS-V094	001	H-T11	727	N/A		CLS 2,135# / 3/16” (UP)				
VS	01A-2MS-V095	001	H-T10	721	N/A		CLS 1,196# / 3/4” (DN)				
VS	01A-2MS-V095	001	H-T10	721	N/A		CLS 1,196# / 3/4” (DN)				
VS	01A-2MS-V096	001	H-T11	727	N/A		CLS 2,140# / 3/16” (DN)				
VS	01A-2MS-V097	001	H-T10	720	N/A		CLS 1,187# / 7/8” (DN)				
VS	01A-2MS-V097	001	H-T10	720	N/A		CLS 1,187# / 7/8” (DN)				
VS	01A-2MS-V098	001	H-T11	724	N/A		CLS 1,717# / 3/16” (UP)				

Attachment 20
(Page 9 of 37)

DYNAMIC SNUBBERS, VARIABLE SPRINGS AND CONSTANT SPRINGS 350° (345°-355°) PLATEAU DATA

Date _____

TYPE SUPT	SUPPORT IDENTIFIER	SYS	LOCATION	ELEV	SERIAL NO.	TEMP °F	SET POINT / MOVEMENT	SCALE READING	PERFORMER INIT/ DATE	VERIFIER INIT/ DATE	COMMENTS
(STEP 6.9[2.2]) During Performance of 2-PTI-003A-03											
Main Feedwater Line to Steam Generator #1											
DS	2-03A-205	003	U-A15	731			CLS 2-5/16” / 1-7/16” (T), 0 (C)				
Main Feedwater Line to Steam Generator #2											
DS	2-03A-244	003	AZ172	731			CLS 3-1/2” / 1-1/4” (T), 1/4” (C)				
DS	2-03A-248	003	AZ165	731			CLS 4” / 1/16” (T), 1-1/8” (C)				
Main Feedwater Line to Steam Generator #3											
DS	2-03A-285	003	CRANE WALL AZ188	731			CLS 2-1/2” / 2” (T), 0” (C)				
DS	2-03A-289	003	AZ185	731			CLS 5” / 0 (T), 3-15/16” (C)				
Main Feedwater Line to Steam Generator #4											
DS	2-03A-320	003	CRANE WALL AZ352	729			CLS 3” / 0” (T), 2-3/16” (C)				
DS	2-03A-321	003	CRANE WALL AZ352	731			CLS 3” / 7/8” (T), 1/16” (C)				
DS	2-03A-323	003	U-A14	731			CLS 2-3/16” / 1-5/8” (T), 0” (C)				
DS	2-03A-328	003	U-A15	731			CLS 3” / 3” (T), 0” (C)				

Attachment 20
(Page 10 of 37)

DYNAMIC SNUBBERS, VARIABLE SPRINGS AND CONSTANT SPRINGS 350° (345°-355°) PLATEAU DATA

Date _____

TYPE SUPT	SUPPORT IDENTIFIER	SYS	LOCATION	ELEV	SERIAL NO.	TEMP °F	SET POINT / MOVEMENT	SCALE READING	PERFORMER INIT/ DATE	VERIFIER INIT/ DATE	COMMENTS
(STEP 6.9[2.3]) During Performance of 2-PTI-003A-03											
Main Feedwater Bypass Line to Steam Generator #1											
DS	2-03A-369	003	AZ35	759			CLS 3-1/8” / 0” (T), 1-1/16” (C)				
DS	2-03A-370	003	AZ35	759			CLS 3.075” / . 72” (T), 1.149” (C)				
DS	2-03A-374E	003	S VLV RM U-6	730			CLS 1-11/16” / .63” (T), .04” (C)				
DS	2-03A-374W	003	S VLV RM U-6	730			CLS 1-11/16” / .63” (T), .04” (C)				
DS	2-03A-377	003	S VLV RM U-A15	730			CLS 2-1/4” / .03” (T), .57” (C)				
VS	2-03A-377	003	S VLV RM U-A15	730	N/A		CLS 2,431 / +.04” / -.55” (NOR), +.11” /- .62” (MAX)				
VS	2-03A-378	003	AZ35	759	N/A		CLS 1-11/16”” / .632” (T), .04” (C)				
Main Feedwater Bypass Line to Steam Generator #2											
VS	2-03A-408	003	AZ160	759	N/A		CLS 913 / 1” (UP)				
DS	2-03A-411	003	AZ120	759			CLS 3-7/16” / 0” (T), 13/16” (C)				
DS	2-03A-423	003	N VLV RM AB X-6	735			CLS 3-1/4” / .05” (T), .81” (C)				
DS	2-03A-426	003	N VLV RM AB A-8	730			CLS 3” ±1/4” / .08” (T), .16” (C)				
DS	47A401-8-20T	003	AZ163	758			CLS 2” / 1/16” (T), 9/16” (C)				
DS	47A401-8-20B	003	AZ163	758			CLS 2” / 1/16” (T), 9/16” (C)				

Attachment 20
(Page 11 of 37)

DYNAMIC SNUBBERS, VARIABLE SPRINGS AND CONSTANT SPRINGS 350° (345°-355°) PLATEAU DATA

Date _____

TYPE SUPT	SUPPORT IDENTIFIER	SYS	LOCATION	ELEV	SERIAL NO.	TEMP °F	SET POINT / MOVEMENT	SCALE READING	PERFORMER INIT/ DATE	VERIFIER INIT/ DATE	COMMENTS
(STEP 6.9[2.3]) During Performance of 2-PTI-003A-03											
Main Feedwater Bypass Line to Steam Generator #3											
DS	2-03A-455	003	AZ199	759			CLS 3-1/2” / 0” (T), 1-3/16” (C)				
DS	2-03A-468	003	AZ182	730			CLS 2-1/2” / 11/16” (T), 0” (C)				
VS	2-47A401-8-28	003	AZ210	759	N/A		CLS 988 / +1-5/16” / 0” (NOR), 1-15/16” / -5/8” (MAX)				
DS	2-47A401-8-29T	003	AZ210	759			CLS 2-1/2” / 1-1/16” (T), 1/16” (C)				
DS	2-47A401-8-29B	003	AZ210	759			CLS 2-1/2” / 1-1/16” (T), 1/16” (C)				
Main Feedwater Bypass Line to Steam Generator #4											
DS	2-03A-480	003	AZ350	761			CLS 4-1/4” / 1/8” (T), 1-9/16” (C)				
VS	2-03A-481	003	AZ350	759	N/A		CLS 397# / +1” / -1/16” (NOR), +1” / -1/16” (MAX)				
DS	2-03A-482T	003	AZ350	759			CLS 2-1/4” / 9/16” (T), 0” (C)				
DS	2-03A-482B	003	AZ350	759			CLS 2-1/4” / 9/16” (T), 0” (C)				
DS	2-03A-483	003	AZ280	759			CLS 3-5/8” / 1/16” (T), 1-1/8” (C)				
DS	2-03A-485	003	AZ350	759			CLS 2-1/2” / .16” (T), .59” (C)				
DS	2-03A-497	003	S VLV RM AZ6	730			CLS 3-1/8” / 1/4” (T), 1/32” (C)				
DS	2-03A-503	003	S VLV RM AZ18	739			CLS 2-1/2” / 1/8” (T), 1/16” (C)				
DS	47A401-8-21E	003	AZ351	739			CLS 2-11/16” / 5/16” (T), 11/16” (C)				

Attachment 20
(Page 12 of 37)

DYNAMIC SNUBBERS, VARIABLE SPRINGS AND CONSTANT SPRINGS 350° (345°-355°) PLATEAU DATA

Date _____

TYPE SUPT	SUPPORT IDENTIFIER	SYS	LOCATION	ELEV	SERIAL NO.	TEMP °F	SET POINT / MOVEMENT	SCALE READING	PERFORMER INIT/ DATE	VERIFIER INIT/ DATE	COMMENTS
DS	47A401-8-21W	003	AZ351	739			CLS 2-11/16” / 5/16” (T), 11/16” (C)				
DS	2-47A427-3-57T	003	AZ331	759			CLS 1-7/8” / 0” (T), 5/8” (C)				
DS	2-47A427-3-57B	003	AZ331	759			CLS 1-7/8” / 0” (T), 5/8” (C)				

Attachment 20
(Page 13 of 37)

DYNAMIC SNUBBERS, VARIABLE SPRINGS AND CONSTANT SPRINGS 350° (345°-355°) PLATEAU DATA

Date _____

TYPE SUPT	SUPPORT IDENTIFIER	SYS	LOCATION	ELEV	SERIAL NO.	TEMP °F	SET POINT / MOVEMENT	SCALE READING	PERFORMER INIT/ DATE	VERIFIER INIT/ DATE	COMMENTS
(STEP 6.9[2.4]) During Performance of 2-PTI-003A-03											
Main Feedwater Warm Up Line for Steam Generator #1											
DS	2-03A-527	003	S VLV RM A6-M	730			CLS 7/16” / 1-5/16”” (T), -1/16” (C)				
Main Feedwater Warm Up Line for Steam Generator #3											
DS	2-03A-563	003	N VLV RM 6-A	730			CLS 4-5/8” / 1/8” (T), 4-3/16” (C)				
Main Feedwater Warm Up Line for Steam Generator #4											
DS	2-03A-582	003	S VLV RM AZ350	730			CLS 5-1/8” / 0” (T), 4-1/16” (C)				
DS	2-03A-584	003	S VLV RM 6-M	730			CLS 3” / .06” (T), 1.99” (C)				
DS	2-47A401-9-15	003	S VLV RM AZ350	730			CLS 3” / 1/16”” (T), 1-13/16” (C)				

Attachment 20
(Page 14 of 37)

DYNAMIC SNUBBERS, VARIABLE SPRINGS AND CONSTANT SPRINGS 350° (345°-355°) PLATEAU DATA

Date _____

TYPE SUPT	SUPPORT IDENTIFIER	SYS	LOCATION	ELEV	SERIAL NO.	TEMP °F	SET POINT / MOVEMENT	SCALE READING	PERFORMER INIT/ DATE	VERIFIER INIT/ DATE	COMMENTS
(STEP 6.9[2.5]) During Performance of 2-PTI-003B-05 Section 6.10 (TD) and Section 6.14 (MD)											
Auxiliary Feedwater From the Motor Driven Auxiliary Feed Pump 2A-A to Steam Generator #1											
VS	03B-2AFW-V047	003	T-A15 AB	702	N/A		CLS 724 /+1/16” UP (NOR), + 1/16” UP (MAX)				
DS	03B-2AFW-R155	003	S VLV RM U-6	746			CLS 1-1/2” / 3/8” (T), 1-7/16” (C)				
Auxiliary Feedwater From the Motor Driven Auxiliary Feed Pump 2A-A to Steam Generator #2											
VS	03B-2AFW-V178N	003	AZ301	750	N/A		CLS 124 / +3/8” / -1/8” (NOR), +13/16” / -9/16” (MAX)				
VS	03B-2AFW-V178S	003	AZ301	750	N/A		CLS 71 / +3/8” / -1/8” (NOR), +13/16” / -9/16” (MAX)				
VS	2-03B-80	003	AZ301	744	N/A		CLS 282# / 1/4” (UP)				
DS	2-03B-71T	003	AZ143	740			CLS 1-1/2” / .47” (T), .69” (C)				
DS	2-03B-71B	003	AZ143	740			CLS 1-1/2” / .47” (T), .69” (C)				
DS	2-03B-82	003	AZ143	727			CLS 2-1/2” / 0” (T), 1/4” (C)				
VS	2-03B-82	003	AZ143	727	N/A		CLS 612# / +0” / -1/4” (NOR), +0” / -1/4” (MAX)				
DS	2-03A-400	003	AZ144	744			CLS 2” / .67”(T), .0” (C)				
DS	2-03A-401	003	AZ143	744			CLS 2” / .85” (T), 0” (C)				
DS	2-03A-402	003	AZ143	753			CLS 3” / 0” (T), .20” (C)				
DS	2-03A-404	003	AZ144	753			CLS 4-1/2” / 0” (T), .88” (C)				
DS	2-03A-415	003	AZ144	752			CLS 3” / .73” (T), 0” (C)				

Attachment 20
(Page 15 of 37)

DYNAMIC SNUBBERS, VARIABLE SPRINGS AND CONSTANT SPRINGS 350° (345°-355°) PLATEAU DATA

Date _____

TYPE SUPT	SUPPORT IDENTIFIER	SYS	LOCATION	ELEV	SERIAL NO.	TEMP °F	SET POINT / MOVEMENT	SCALE READING	PERFORMER INIT/ DATE	VERIFIER INIT/ DATE	COMMENTS
(STEP 6.9[2.5]) During Performance of 2-PTI-003B-05 Section 6.10 (TD) and Section 6.14 (MD)											
Auxiliary Feedwater From the Motor Driven Auxiliary Feed Pump 2B-B to Steam Generator #3											
DS	2-03B-35	003	AZ301	743			CLS 2” / 5/8” (T), 1/8” (C)				
VS	47A427-6-31	003	AZ301	743	N/A		CLS 343# / +5/8” / -1/8” (NOR), +5/8” / -1/16” (MAX)				
VS	47A427-6-32	003	AZ216	730	N/A		CLS 895# / +1/8” / -9/16” (NOR), +1/16” / -9/16” (MAX)				
DS	2-03B-37	003	AZ215	741			CLS 2” / 1/8” (T), 9/16” (C)				
DS	2-03B-39	003	AZ216	730			CLS 3-1/4” / .39” (T), 0” (C)				
DS	2-03A-445	003	AZ216	753			CLS 2-3/4” / 9/16” (T), 1/16” (C)				
DS	2-03A-449	003	AZ216	754			CLS 2-11/16” / 11/16” (T), 0” (C)				
Auxiliary Feedwater From the Motor Driven Auxiliary Feed Pump 2B-B to Steam Generator #4											
VS	03B-2AFW-V177	003	U-A14 AB	753	N/A		CLS 1,247 / +3/8” / -1/16” (NOR), +3/8” / -1/16” (MAX)				
DS	03B-2AWF-R242	003	U-A14 AB	745			CLS 2-11/16” / 1/16” (T), 3/8” (C)				
DS	03B-2AFW-R171E	003	U-A14 AB	748			CLS 1-1/4” / 1/4” (T), 1/32” (C)				
DS	03B-2AFW-R171W	003	U-A14 AB	748			CLS 1-1/4” / 1/4” (T), 1/32” (C)				

Attachment 20
(Page 16 of 37)

DYNAMIC SNUBBERS, VARIABLE SPRINGS AND CONSTANT SPRINGS 350° (345°-355°) PLATEAU DATA

Date _____

TYPE SUPT	SUPPORT IDENTIFIER	SYS	LOCATION	ELEV	SERIAL NO.	TEMP °F	SET POINT / MOVEMENT	SCALE READING	PERFORMER INIT/ DATE	VERIFIER INIT/ DATE	COMMENTS
VS	2-62A-240	062	AZ110	728	N/A		CLS 813# / +1/16” / -1/16” (NOR), +1/16” / -1/16” (MAX)				
DS	2-62A-247	062	AZ81	704			CLS 4-1/4” / 1/16” (T), 11/16” (C)				
DS	2-62A-250	062	AZ54	709			CLS 1-1/4” / .44” (T), .02” (C)				
VS	2-62A-252	062	AZ54	714	N/A		CLS 510# / +1/6” / -0” (NOR), +1/16” / 0” (MAX)				
DS	2-62A-254	062	AZ50	706			CLS 1-1/8” / 1/16” (T), 1/8” (C)				
DS	2-62A-256N	062	AZ51	704			CLS 2-1/2” / .01” (T), .1” (C)				
DS	2-62A-256S	062	AZ51	704			CLS 2-1/2” / .01” (T), .1” (C)				
DS	2-62A-256V	062	AZ57	704			CLS 2” / .15” (T), .01” (C)				
VS	2-62A-258	062	AZ48	713	N/A		CLS 90# / + 3/16” / -0” (NOR), +3/16” / -0” (MAX)				
DS	2-62A-262	062	AZ47	706			CLS 1-3/16” / 1/8 (T), 1/4” (C)				
VS	2-62A-266	062	AZ46	714	N/A		CLS 60# / 1/64” (NOR), 1/64” (MAX)				
DS	2-62A-269	062	AZ46	706			CLS 2” / 1/16” (T), 1/4” (C)				
DS	2-62A-271E	062	AZ45	704			CLS 1-1/8” / 1/8” (T), 1/16” (C)				
DS	2-62A-271W	062	AZ45	704			CLS 1-1/8” / 1/8” (T), 1/16” (C)				
VS	2-62A-290	062	AZ215	705	N/A		CLS 1,114# / 1.07” (UP)				
DS	2-62A-291	062	AZ215	711			CLS 2-3/4” / 0” (T), 2-1/8” (C)				
DS	2-62A-294	062	AZ215	727			CLS 2-1/6” / 1/2” (T), 5/8” (C)				
DS	2-62A-319	062	AZ128	716			CLS 1” / 1/16” (T), 1/16” (C)				
DS	2-62A-320	062	AZ107	723			CLS 1” / 11/16” (T), 0” (C)				
CS	2-62A-346	062	AZ103	732	N/A		CLS 515# / 2-3/8”(UP)				

Attachment 20
(Page 17 of 37)

DYNAMIC SNUBBERS, VARIABLE SPRINGS AND CONSTANT SPRINGS 350° (345°-355°) PLATEAU DATA

Date _____

TYPE SUPT	SUPPORT IDENTIFIER	SYS	LOCATION	ELEV	SERIAL NO.	TEMP °F	SET POINT / MOVEMENT	SCALE READING	PERFORMER INIT/ DATE	VERIFIER INIT/ DATE	COMMENTS
DS	2-62A-357	062	AZ343	727			CLS 3/4” / 2-13/16 ” (T), 0” (C)				
DS	2-62A-358	062	AZ328	727			CLS 1/2” (+1/4”, -0”) / 3-5/8” (T), 1/16” (C)				
DS	2-62A-360	062	AZ322	727			CLS 3-3/4” / 1/2” (T), 2-7/16” (C)				
DS	2-62A-362	062	AZ322	727			CLS 2.19” / 1/8” (T), 3/8” (C)				
DS	2-62A-363	062	AZ321	726			CLS 1” / 2-1/8” (T), 0” (C)				
DS	2-62A-366	062	AZ318	727			CLS 1-1/8” / 1-13/16” (T), 1/8” (C)				
DS	2-62A-369	062	AZ128	727			CLS 1-7/8” / 0” (T), 1/2” (C)				
DS	2-62A-371	062	AZ128	728			CLS 7/8” / 1/4” (T), 0” (C)				
CS	2-62A-375	062	AZ103	734	N/A		CLS 429# / 3/32” (DOWN)				
DS	2-62A-377	062	AZ95	730			CLS 2-3/4” / 1/8” (T), 1-7/16” (C)				
DS	2-62A-382	062	AZ48	727			CLS 1-1/4” / 1-9/16” (T), 1/8” (C)				
DS	2-62A-463	062	AZ225	723			CLS 1.81” / .01” (T), 1.32” (C)				
VS	2-62A-530	062	AZ45	705	N/A		CLS 568# / +0” / -.03” (NOR), +.02” / -.05” (MAX)				
DS	2-62A-531	062	AZ44	712			CLS 3-1/2” / 1/16” (T), 5/8” (C)				
VS	2-62A-532	062	AZ52	706	N/A		CLS 460# / +1/16” / -1/16” (NOR), +1/16” / -1/16” (MAX)				
DS	2-62A-533	062	AZ50	706			CLS 5/8” / 3/16” (T), 1/16” (C)				
VS	2-62A-535	062	AZ48	705	N/A		CLS 589# / 1/8” (DOWN)				
DS	2-62A-536	062	AZ46	712			CLS 2-1/4” / 1/16” (T), 5/8” (C)				
DS	2-62A-557	062	AZ43	727			CLS 3-3/16” (+1/16”, 3/16”) / 7/16” (T), 2-3/4” (C)				
DS	2-62A-559	062	AZ43	727			CLS 3” / 1/4” (T), 1-1/2” (C)				

Attachment 20
(Page 18 of 37)

DYNAMIC SNUBBERS, VARIABLE SPRINGS AND CONSTANT SPRINGS 350° (345°-355°) PLATEAU DATA

Date _____

TYPE SUPT	SUPPORT IDENTIFIER	SYS	LOCATION	ELEV	SERIAL NO.	TEMP °F	SET POINT / MOVEMENT	SCALE READING	PERFORMER INIT/ DATE	VERIFIER INIT/ DATE	COMMENTS
DS	2-62A-561	062	AZ43	727			CLS 2” / 15/16” (T), 5/16” (C)				
VS	2-62A-562	062	AZ43	727	N/A		CLS 422 / 1/4” (UP)				
DS	2-62A-563	062	AZ43	727			CLS 1-1/2” / 13/16” (T), 0” (C)				
VS	2-62A-584	062	AZ178	730	N/A		CLS 35# / 3/8” (UP)				
DS	2-62A-589	062	AZ150	729			CLS 2-1/2” / .85” (T), .03” (C)				
VS	2-62A-621	062	AZ302	716	N/A		CLS 117/ +.02”/ -.39” (NOR) +.03”/ -.41” (MAX)				
DS	2-62A-624	062	AZ44	706			CLS 2-5/8” / 1/16” (T), 1/16" (C)				
DS	2-62A-625	062	AZ57	706			CLS 1-7/8” / 3/16” (T), 1/16” (C)				
DS	2-62A-630	062	AZ150	729			CLS 2” / 0” (T), 3/4” (C)				
VS	2-62A-637	062	AZ110	719	N/A		CLS 112# / +.09" / -0" (NOR), +.09" / 0" (MAX)				
DS	2-62A-802	062	AZ200	719			CLS 2-1/4” / 1-1/8” (T), 0” (C)				
DS	2-62A-808	062	AZ210	726			CLS 3-1/8” / 1/16” (T), 2-3/16” (C)				
DS	2-62A-809	062	AZ210	725			CLS 3-1/4” / .02” (T), 2.07” (C)				
DS	2-62A-810	062	AZ208	725			CLS 3/4” / 2-3/4” (T), 0” (C)				
DS	2-68-365	062	AZ220	704			CLS 1-1/4” / 2-13/16” (T), 0” (C)				
DS	47A406-12-79N	062	AZ48	706			CLS 2” /1/16” (T), 1/16” (C)				
DS	47A406-12-79S	062	AZ48	706			CLS 2” / 1/16” (T), 1/16” (C)				
DS	47A406-12-79W	062	AZ48	706			CLS 2” / 3/16” (T), 1/8” (C)				
DS	47A406-12-82	062	AZ43	705			CLS 2-1/8” / 1/16” (T), 3/16” (C)				
DS	2-47A406-12-89	062	AZ48	705			CLS 1” / .02” (T), .03” (C)				
DS	2-47A406-12-93N	062	AZ44	712			CLS 2-5/8” / 1/16” (T), 1/4” (C)				
DS	2-47A406-12-93S	062	AZ44	712			CLS 2-5/8” / 1/16” (T), 1/4” (C)				

Attachment 20
(Page 19 of 37)

DYNAMIC SNUBBERS, VARIABLE SPRINGS AND CONSTANT SPRINGS 350° (345°-355°) PLATEAU DATA

Date _____

TYPE SUPT	SUPPORT IDENTIFIER	SYS	LOCATION	ELEV	SERIAL NO.	TEMP °F	SET POINT / MOVEMENT	SCALE READING	PERFORMER INIT/ DATE	VERIFIER INIT/ DATE	COMMENTS
DS	2-47A406-12-94E	062	AZ44	712			CLS 4-1/8” / 1/16” (T), -3/16” (C)				
DS	2-47A406-12-94W	062	AZ44	712			CLS 4-1/8” / 1/16” (T), -3/16” (C)				
DS	2-47A406-12-97T	062	AZ326	712			CLS 4-3/8” / 1/16” (T), 1-3/8 (C)				
DS	2-47A406-12-97B	062	AZ326	712			CLS 4-1/2” / 1/16” (T), 1-3/8” (C)				
DS	2-47A406-12-98N	062	AZ53	712			CLS 2-1/2” /1/10” (T), 1-1/4” (C)				
DS	2-47A406-12-98S	062	AZ53	712			CLS 2-1/2” / 1/10” (T), 1-1/4” (C)				
DS	2-47A406-12-101	062	AZ44	712			CLS 2-7/16” / 1/16” (T), 13/16” (C)				
DS	47A406-13-56	062	AZ216	726			CLS .9” / .74”(T), .02” (C)				
DS	2-47A406-13-106	062	AZ52	727			CLS 2-7/16” / 1/16” (T), 1/8” (C)				
DS	2-47A406-14-67	062	AZ123	720			CLS 2” / 1-1/16” (T), 1/16” (C)				
VS	2-47A406-14-81	062	AZ321	728	N/A		CLS 441# / + 1/4” / -1/16” (NOR), +5/8” / -1/2” (MAX)				
DS	2-47A406-14-84	062	AZ123	726	N/A		CLS 2-1/4” / 3/16” (T), 5/16” (C)				
DS	2-47A406-14-85	062	AZ122	725	N/A		CLS 2-1/4” / 7/8” (T), 0 (C)				
DS	2-47A406-14-86	062	AZ122	725	N/A		CLS 2-1/8” / 1/8” (T), 1/8” (C)				
DS	2-47A406-14-87	062	AZ185	730	N/A		CLS 2” / 1/8” (T), 1/16” (C)				
DS	47A465-3-52	062	AZ53	712			CLS 2-1/2” / 1/32” (T), 1/4” (C)				
DS	2-47A560-38-2	062	AZ220	704			CLS 2-1/8” / 1-7/16” (T), 1/16” (C)				

Attachment 20
(Page 20 of 37)

DYNAMIC SNUBBERS, VARIABLE SPRINGS AND CONSTANT SPRINGS 350° (345°-355°) PLATEAU DATA

Date _____

TYPE SUPT	SUPPORT IDENTIFIER	SYS	LOCATION	ELEV	SERIAL NO.	TEMP °F	SET POINT / MOVEMENT	SCALE READING	PERFORMER INIT/ DATE	VERIFIER INIT/ DATE	COMMENTS
DS	2-63-001	063	AZ42	725			CLS 3-1/2” / 1/16” (T), 15/16” (C)				
VS	2-63-002	063	AZ45	728	N/A		CLS 2,431# / +15/16” / -1/16” (NOR), +11/16” / -3/8” (MAX)				
DS	2-63-005	063	AZ40	728			CLS 2-3/16” / 3/16” (T), 1/16” (C)				
DS	2-63-008	063	AZ31	718			4-1/2” / 3/8” (T), 1/16” (C)				
DS	2-63-011	063	AZ40	726			1-1/8” / 1/16” (T), 1/8” (C)				
VS	2-63-013	063	AZ34	740	N/A		CLS 1,466# / +11/16” / -1/32” (NOR), +11/16” / -1/32” (MAX)				
DS	2-63-014	063	AZ34	738			CLS 2” / 11/16” (T), 1/32” (C)				
VS	2-63-016	063	AZ18	741	N/A		CLS 262# / +1-1/8” / -3/16” (NOR), +1-1/8” / -3/16” (MAX)				
DS	2-63-018	063	AZ21	738			CLS 2” / 1-1/8” (T), 1/16” (C)				
DS	2-63-019	063	AZ16	740			CLS 2-1/2” / 1/8” (T), 1-15/16” (C)				
VS	2-63-020	063	AZ12	740	N/A		CLS 1,375 / +1-9/16” / -1/4” (NOR), +1-7/8” / -1/2” (MAX)				
DS	2-63-022	063	AZ358	740			CLS 4” / 1/4” (T), 2-3/4” (C)				
DS	2-63-023	063	AZ342	736			CLS 1-1/4” / 3/8”(T), 1/16” (C)				
DS	2-63-024	063	AZ342	740			CLS 2-3/4” / 1/8” (T),15/16” (C)				
VS	2-63-026	063	AZ320	741	N/A		CLS 1,332# / +3/4” / -0” (NOR), +13/16” / -1/16” (MAX)				

Attachment 20
(Page 21 of 37)

DYNAMIC SNUBBERS, VARIABLE SPRINGS AND CONSTANT SPRINGS 350° (345°-355°) PLATEAU DATA

Date _____

TYPE SUPT	SUPPORT IDENTIFIER	SYS	LOCATION	ELEV	SERIAL NO.	TEMP °F	SET POINT / MOVEMENT	SCALE READING	PERFORMER INIT/ DATE	VERIFIER INIT/ DATE	COMMENTS
VS	2-63-028	063	AZ308	741	N/A		CLS 1,868# / 7/8” (UP) (NOR), 7/8”(UP) (MAX)				
DS	2-63-029	063	AZ308	735			CLS 1-1/4” / 7/8” (T), 0” (C)				
DS	2-63-030	063	AZ308	738			CLS 3” / 1/4” (T), 1/16” (C)				
DS	2-63-031	063	AZ300	735			CLS 1-1/2” / 7/16” (T), 1/16” (C)				
DS	2-63-032	063	AZ300	734			CLS 2” / 13/16” (T), 1/8” (C)				
DS	2-63-035	063	AZ35	728			CLS 3” / 0” (T), 1” (C)				
DS	2-63-038E	063	AZ35	731			CLS 2-3/4” / 1/4” (T), 1/16” (C)				
DS	2-63-038W	063	AZ35	731			CLS 3-1/4” / 1/4” (T), 1/16” (C)				
DS	2-63-042	063	AZ297	734			CLS 2-3/4” / 1/2” (T), 1/16 (C)				
DS	2-63-043	063	AZ297	734			CLS 2-3/8” / 1/8” (T), 0” (C)				
DS	2-63-055	063	AZ111	741			CLS 3-5/8” / 1/8” (T), 2-1/8” (C)				
DS	2-63-062	063	AZ215	741			CLS 3-1/2” / 1/8” (T), 1-1/2” (C)				
VS	2-63-063	063	AZ218	736	N/A		CLS 2,106# / +13/16” / -0” (NOR), +13/16” / -1/16” (MAX)				
DS	2-63-064	063	AZ218	734			CLS 2-1/4” / 0” (T), 3/4” (C)				
DS	2-63-069	063	AZ215	740			CLS 1-3/8” / 1-7/16” (T), 1/16” (C)				
VS	2-63-070	063	AZ225	729	N/A		CLS 3,860# / +5/16” (UP) / -0” (DN) (NOR), +5/16” (UP) / -0” (DN) (MAX)				

Attachment 20
(Page 22 of 37)

DYNAMIC SNUBBERS, VARIABLE SPRINGS AND CONSTANT SPRINGS 350° (345°-355°) PLATEAU DATA

Date _____

TYPE SUPT	SUPPORT IDENTIFIER	SYS	LOCATION	ELEV	SERIAL NO.	TEMP °F	SET POINT / MOVEMENT	SCALE READING	PERFORMER INIT/ DATE	VERIFIER INIT/ DATE	COMMENTS
DS	2-63-072	063	AZ218	725			CLS 2-1/2” / 1/16” (T), 1/8” (C)				
DS	2-63-078	063	AZ145	736			CLS 3-3/4” / 1/8”(T), 3/4” (C)				
VS	2-63-080	063	AZ145	729	N/A		CLS 1,520# / +1/32” / -1/2” (NOR), +1/32” / -1/2” (MAX)				
DS	2-63-095N	063	AZ215	727			CLS 1-3/4” / 0” (T), 5/8” (C)				
DS	2-63-095S	063	AZ215	727			CLS 2” / 1/8” (T), 1/16” (C)				
DS	2-63-156	063	AZ300	725			CLS 2” / 1/16” (T), 11/16” (C)				
DS	2-63-161	063	AZ300	723			CLS 1-15/16” / 1/16” (T), 5/16” (C)				
DS	2-63-163	063	AZ304	722			CLS 1-1/2” / 1/16”(T), 3/16” (C)				
DS	2-63-164	063	AZ302	722			CLS 2-1/4” / 1/2” (T), 1/8” (C)				
VS	2-63-165	063	AZ302	722	N/A		CLS 66 / +1/4” / 0” (NOR), +5/16” / -1/16” (MAX)				
DS	2-63-169	063	AZ295	732			CLS 1-5/8” / 1/16” (T), 1/16” (C)				
DS	2-63-185	063	AZ42	729			CLS 2-1/2” / 1/16” (T), 1-1/8” (C)				
DS	2-63-285	063	AZ181	730			CLS 1-3/4” / 3/16” (T), 1/16” (C)				
VS	2-63-342	063	AZ188	731	N/A		CLS 2,356# / 3/8” (UP)				
DS	2-63-365	063	AZ37	727			CLS 2-7/8” / 1/16” (T), 3/4” (C)				
VS	2-63-367	063	AZ37	731	N/A		CLS 2,140# / +7/8” / -0” (NOR), +1-3/16” / -1/4” (MAX)				

Attachment 20
(Page 23 of 37)

DYNAMIC SNUBBERS, VARIABLE SPRINGS AND CONSTANT SPRINGS 350° (345°-355°) PLATEAU DATA

Date _____

TYPE SUPT	SUPPORT IDENTIFIER	SYS	LOCATION	ELEV	SERIAL NO.	TEMP °F	SET POINT / MOVEMENT	SCALE READING	PERFORMER INIT/ DATE	VERIFIER INIT/ DATE	COMMENTS
VS	2-63-451	063	AZ321	725	N/A		CLS 2,900 / +3/8” / -1/16” (NOR), +3/4” / -1/2” (MAX)				
DS	2-63-453	063	AZ324	724			CLS 2-7/8” / 1/16” (T), 3/8” (C)				
DS	2-63-458	063	AZ324	723			CLS 4-1/2” / 11/16” (T), 1/16” (C)				
DS	2-63-459	063	AZ324	718			CLS 2” / 0” (T), 7/8” (C)				
VS	2-63-466E	063	AZ324	730	N/A		CLS 148# / +1/4” / -1/16” (NOR), +1/4” / -1/16” (MAX)				
VS	2-63-466W	063	AZ324	730	N/A		CLS 160# / +1/4” / -1/16” (NOR), +1/4” / -1/16” (MAX)				
DS	2-63-520	063	AZ45	723			CLS 1-3/4” / 1-1/16” (T), 1/16” (C)				
DS	2-63-526	063	AZ45	725			CLS 3-1/16” / 5/8” (T), 1/8” (C)				
DS	2-63-528	063	AZ293	733			CLS 1” / 1/16” (T), 1/16” (C)				
DS	2-63-571	063	AZ150	729			CLS 7/8” / 9/16" (T), 1/16" (C)				
DS	2-63-573	063	AZ181	730			CLS 1-1/2” / 1/16” (T), 1/4” (C)				
DS	2-63-584	063	AZ39	732			CLS 1-5/16” / 1-1/2” (T), 1/16” (C)				
VS	2-63-588	063	AZ142	731	N/A		CLS 1,988 / -1/8” (EXT)				
DS	2-63-592	063	AZ344	741			CLS 1-1/2” / 2-5/16” (T), 1/2” (C)				

Attachment 20
(Page 24 of 37)

DYNAMIC SNUBBERS, VARIABLE SPRINGS AND CONSTANT SPRINGS 350° (345°-355°) PLATEAU DATA

Date _____

TYPE SUPT	SUPPORT IDENTIFIER	SYS	LOCATION	ELEV	SERIAL NO.	TEMP °F	SET POINT / MOVEMENT	SCALE READING	PERFORMER INIT/ DATE	VERIFIER INIT/ DATE	COMMENTS
DS	47A432-1-8T	063	U-A12	688			CLS 3-7/16” / 1/8” (T), 7/8” (C)				
DS	47A432-1-8B	063	U-A12	688			CLS 3-7/16” / 1/8” (T), 7/8” (C)				
DS	47A432-3-6	063	AZ37	728			CLS 2-3/4” / 1/8” (T), 3/8” (C)				
DS	47A432-3-8	063	AZ142	727			CLS 3” / 0” (T), 3/8” (C)				
DS	2-47A432-3-13	063	AZ35	737			CLS 2-1/2” / 3/4” (T), 1/16” (C)				
DS	2-47A432-3-14	063	AZ38	727			CLS 1-3/4” / 1/16” (T), 11/16” (C)				
DS	2-47A432-3-15	063	AZ142	728			CLS 2-1/4” / 3/4” (T), 1/16” (C)				
DS	2-47A432-3-16	063	AZ157	725			CLS 4” / 3/8” (T), 3/8” (C)				
DS	47A435-3-8	063	U-A13	706			CLS 1-1/8” / 1/4” (T), 1/16” (C)				
DS	2-47A435-3-18T	063	U-C13	719			CLS 3” / 3/16” (T), 3/8” (C)				
DS	2-47A435-3-18B	063	U-C13	719			CLS 3” / 3/16” (T), 3/8” (C)				
DS	2-47A435-12-6	063	AZ291	721			CLS 2” / 1/16” (T), 3/8” (C)				
DS	47A435-12-62	063	AZ324	731			CLS 5/8” / 5/16” (T), 1/16” (C)				
DS	47A435-12-89	063	AZ324	728			CLS 1-1/4” / 3/16” (T), 1/16” (C)				
DS	2-47A435-12-93	063	AZ300	723			CLS 5/8” / 1-5/16” (T), 1/16” (C)				
DS	47A435-13-60	063	AZ32	723			CLS 1” / 7/8” (T), 0” (C)				
VS	47A435-13-73	063	AZ347	740	N/A		CLS 1,125# / +11/16” / -3/16” (NOR), + 7/8” / -5/16” (MAX)				
DS	2-47A435-13-117	063	AZ45	721			CLS 1-3/4” / 1/16” (T), 1” (C)				

Attachment 20
(Page 25 of 37)

DYNAMIC SNUBBERS, VARIABLE SPRINGS AND CONSTANT SPRINGS 350° (345°-355°) PLATEAU DATA

Date _____

TYPE SUPT	SUPPORT IDENTIFIER	SYS	LOCATION	ELEV	SERIAL NO.	TEMP °F	SET POINT / MOVEMENT	SCALE READING	PERFORMER INIT/ DATE	VERIFIER INIT/ DATE	COMMENTS
DS	2-47A435-13-118	063	AZ45	718			CLS 2” / 3/16” (T),1/16” (C)				
VS	2-47A435-13-119	063	AZ45	718	N/A		CLS 91# / +1/16” / -1/16” (NOR), +1/4” / -1/4” (MAX)				
VS	47A435-14-61	063	AZ125	721	N/A		CLS 1,715# / +3/16” (UP) (NOR), 1/2” (UP) (MAX)				
DS	47A435-14-80N	063	AZ146	725			CLS 1-1/2" / 1/16" (T), 5/16" (C)				
DS	47A435-14-80S	063	AZ146	725			CLS 1-1/2" / 1/16" (T), 5/16" (C)				
VS	47A435-14-81	063	AZ145	730	N/A		CLS 175 / +.01” / -.34” (NOR), +.02” / -.40” (MAX)				
VS	47A435-14-84	063	AZ150	730	N/A		CLS 48# / +0 UP”, -3/16” DOWN (NOR), +0 UP”, -3/16” DOWN (MAX)				
DS	2-47A435-14-107	063	AZ143	727			CLS 1-1/4” / 1/8” (T), 3/8” (C)				
DS	2-47A435-14-109	063	AZ199	721			CLS 1-11/16” / 0” (T), 7/8” (C)				
VS	47A435-14-110	063	AZ132	720	N/A		CLS 200# / +3/16” / -0” (NOR), +3/8” / -1/16” (MAX)				
VS	47A435-15-58	063	AZ228	720	N/A		CLS 154# / +.02” / -.01” (NOR), +.34” / -.32” (MAX)				
DS	47A435-15-70	063	AZ232	718			CLS 2-3/8”/ 3/8” (T), 1/16” (C)				
DS	47A435-15-79	063	AZ219	724			CLS 1-1/2” / 0” (T), 3/4” (C)				
DS	47A435-15-97	063	AZ218	723			CLS 3” / 1/16” (T), 11/16” (C)				

Attachment 20
(Page 26 of 37)

DYNAMIC SNUBBERS, VARIABLE SPRINGS AND CONSTANT SPRINGS 350° (345°-355°) PLATEAU DATA

Date _____

TYPE SUPT	SUPPORT IDENTIFIER	SYS	LOCATION	ELEV	SERIAL NO.	TEMP °F	SET POINT / MOVEMENT	SCALE READING	PERFORMER INIT/ DATE	VERIFIER INIT/ DATE	COMMENTS
DS	47A435-16-17	063	AZ286	729			CLS 1-1/8” / 1/16” (T), 3/16” (C)				
DS	47A435-16-21E	063	AZ292	733			CLS 2-7/16” / 1/16” (T), 1/16” (C)				
DS	47A435-16-21W	063	AZ292	733			CLS 3-1/8” / 1/16” (T), 1/16” (C)				
DS	47A435-16-31	063	AZ285	731			CLS 2 1/4” / 1/16” (T), 3/16” (C)				
DS	47A435-16-33N	063	AZ289	731			CLS 3” / 1/16” (T), 1/16” (C)				
DS	47A435-16-33S	063	AZ289	731			CLS 1” / 1/16” (T), 1/4” (C)				
DS	47A435-16-34N	063	AZ282	726			CLS 2-7/8” / 1/16” (T), 3/16” (C)				
DS	47A435-16-34S	063	AZ282	726			CLS 2” / 0” (T), 1/32” (C)				
DS	47A435-16-47	063	AZ289	733			CLS 2-3/4” / 1/16” (T), 3/16” (C)				
DS	47A435-16-50S	063	AZ298	724			CLS 2” / 1/16” (T), 5/16” (C)				
DS	47A435-16-50E	063	AZ298	724			CLS 2” / 1/8” (T), 3/8” (C)				
DS	47A435-16-51	063	AZ291	729			CLS 2” / 3/16” (T), 0” (C)				
DS	47A435-16-55E	063	AZ295	732			CLS 2-7/8” / 1/16” (T), 1/8” (C)				
DS	47A435-16-55S	063	AZ295	732			CLS 2” / 1/8” (T), 1/4” (C)				
DS	47A435-16-62N	063	AZ294	725			CLS 1-3/16” / 1/16” (T), 0” (C)				
DS	47A435-16-62S	063	AZ294	725			CLS 1-3/16” / 1/16” (T), 0” (C)				
DS	47A435-16-65	063	AZ296	719			CLS 2-5/8” / 0” (T), 3/8” (C)				
DS	47A435-16-66	063	AZ296	719			CLS 2” / 1/8” (T), 1/4” (C)				
DS	2-47A435-16-73	063	AZ284	724			CLS 1-15/16” / 1/8” (T), 1/16” (C)				

Attachment 20
(Page 27 of 37)

DYNAMIC SNUBBERS, VARIABLE SPRINGS AND CONSTANT SPRINGS 350° (345°-355°) PLATEAU DATA

Date _____

TYPE SUPT	SUPPORT IDENTIFIER	SYS	LOCATION	ELEV	SERIAL NO.	TEMP °F	SET POINT / MOVEMENT	SCALE READING	PERFORMER INIT/ DATE	VERIFIER INIT/ DATE	COMMENTS
VS	2-47A435-16-75	063	AZ284	724	N/A		CLS 155# / -1/16" (NOR), -1/16" (MAX)				
DS	2-47A435-16-76	063	AZ284	729			CLS 2" / 1/16" (T), 3/16" (C)				
DS	2-47A435-16-77	063	AZ285	729			CLS 2-3/16" / 1/16" (T), 3/8" (C)				
DS	2-47A435-16-78	063	AZ285	729			CLS 2" / 1/8" (T), 3/16" (C)				
VS	2-47A435-16-79	063	AZ298	731	N/A		CLS 210# / +5/16", -1/16" (NOR) +3/8", -1/16" (MAX)				
VS	47A437-1-25	063	T-A10	690	N/A		CLS 2,683# / +1/16" / -0" (NOR), +1/16" ' -1/16" (MAX)				
DS	2-47A437-1-62	063	U-A12	688			CLS 3-1/2" / 1/4" (T), 2-5/16" (C)				
DS	2-47A437-2-4	063	U-A11	681			CLS 2-7/8" / 5/16" (T), 1/16" (C)				
DS	47A437-2-22	063	T-A11	684			CLS 2" / 0" (T), 1/4" (C)				
DS	47A437-2-24	063	U-A11	686			CLS 1-1/2" / 3/16"(T), 1/16" (C)				
VS	47A437-2-28N	063	U-A11	676	N/A		CLS 7,141# / +.06" / -.31 (NOR), +.06" / -.31" (MAX)				
VS	47A437-2-28S	063	U-A11	676	N/A		CLS 7,141# / +.06" / -.31 (NOR), +.06" / -.31" (MAX)				
VS	47A437-2-29E	063	U-A10	681	N/A		CLS 1,341# / +1/16" / -0" (NOR), +1/16" / 0" (MAX)				
VS	47A437-2-29W	063	U-A10	681	N/A		CLS 1509# / +1/16" / -0" (NOR), +1/16" / 0" (MAX)				

Attachment 20
(Page 28 of 37)

DYNAMIC SNUBBERS, VARIABLE SPRINGS AND CONSTANT SPRINGS 350° (345°-355°) PLATEAU DATA

Date _____

TYPE SUPT	SUPPORT IDENTIFIER	SYS	LOCATION	ELEV	SERIAL NO.	TEMP °F	SET POINT / MOVEMENT	SCALE READING	PERFORMER INIT/ DATE	VERIFIER INIT/ DATE	COMMENTS
DS	63-2SIS-V142N	063	V-A10	687	N/A		CLS 2-1/2” / 3/16” (T), 1/4” (C)				
DS	63-2SIS-V142S	063	V-A10	687	N/A		CLS 2-1/2” / 3/16” (T), 1/4” (C)				
VS	63-2SIS-V143N	063	V-A11	690	N/A		CLS 978# / +1/4” / 0” (NOR), +1/8” / -3/16” (MAX)				
VS	63-2SIS-V143S	063	V-A11	690	N/A		CLS 1,775# / +1/4” / 0” (NOR), +1/8” / -3/16” (MAX)				
VS	63-2SIS-V145	063	V-A11	691	N/A		CLS 2,177# / +1/8” / -1/4” (NOR), +1/16” / -7/16” (MAX)				
DS	63-2SIS-R155	063	V-A12	688			CLS 3.4” / 0” (T), 13/16” (C)				
VS	63-2SIS-V166N	063	U-A10	689	N/A		CLS 773 / +.21” / -.05” (NOR), +.22” / -.06” (MAX)				
VS	63-2SIS-V166S	063	U-A10	689	N/A		CLS 773 / +.21” / -.05” (NOR), +.22” / -.06” (MAX)				
DS	63-2SIS-R168N	063	U-A10	689			CLS 2-5/8” / 1/32” (T), 5/16” (C)				
DS	63-2SIS-R168S	063	U-A10	689			CLS 2-5/8” / 1/32” (T), 5/16” (C)				
DS	63-2SIS-R170	063	U-A12	687			CLS 3-1/2” / 0” (T), 1-9/16” (C)				
DS	63-2SIS-R211	063	V-A12	688			CLS 2-1/2” / 9/16” (T), 0” (C)				
DS	63-2SIS-R214	063	V-A11	686			CLS 3” / .89” (T), 0” (C)				
DS	63-2SIS-R216	063	U-A11	684			CLS 2-3/4” / 0” (T), 1/8” (C)				
DS	63-2SIS-R240N	063	U-A12	686			CLS 1” / 13/16”” (T), 0” (C)				

Attachment 20
(Page 29 of 37)

DYNAMIC SNUBBERS, VARIABLE SPRINGS AND CONSTANT SPRINGS 350° (345°-355°) PLATEAU DATA

Date _____

TYPE SUPT	SUPPORT IDENTIFIER	SYS	LOCATION	ELEV	SERIAL NO.	TEMP °F	SET POINT / MOVEMENT	SCALE READING	PERFORMER INIT/ DATE	VERIFIER INIT/ DATE	COMMENTS
DS	63-2SIS-R240S	063	U-A12	686			CLS 2” / 13/16”” (T), 0” (C)				
DS	63-2SIS-R242	063	U-A12	686			CLS 2-5/8” / 11/16” (T), 0” (C)				
DS	63-2SIS-R245	063	T-A11	686			CLS 2-1/2” / 0” (T), 1/8” (C)				
DS	63-2SIS-R276	063	T-A11	689			CLS 2” / 5/16” (T), 0” (C)				

Attachment 20
(Page 30 of 37)

DYNAMIC SNUBBERS, VARIABLE SPRINGS AND CONSTANT SPRINGS 350° (345°-355°) PLATEAU DATA

Date _____

TYPE SUPT	SUPPORT IDENTIFIER	SYS	LOCATION	ELEV	SERIAL NO.	TEMP °F	SET POINT / MOVEMENT	SCALE READING	PERFORMER INIT/ DATE	VERIFIER INIT/ DATE	COMMENTS
VS	2-68-001	068	AZ147	724	N/A		CLS 5,695# / +3/8” / -0” (NOR), +5/8” / -1/4” (MAX)				
VS	2-68-005	068	AZ92	725	N/A		CLS 4,614 / +0” / -1-1/2” (NOR), +0” / -2-1/4” (MAX)				
CS	2-68-011N	068	AZ104	787	N/A		CLS 1.8 INC / +2.70” / -.11” (MAX)				
CS	2-68-011S	068	AZ104	787	N/A		CLS 1.8 INC / +2.70” / -.11” (MAX)				
DS	2-68-020	068	AZ104	733			CLS 2-11/16” / 5/8” (T), 1/16” (C)				
DS	2-68-021	068	AZ110	729			CLS 2-7/8” / 1/16” (T), 9/16” (C)				
DS	2-68-023E	068	AZ109	736			CLS 1-7/8” / 1/16” (T), 15/16” (C)				
DS	2-68-023W	068	AZ109	736			CLS 1-7/8” / 1/16” (T), 15/16” (C)				
DS	2-68-024	068	AZ108	736			CLS 2-1/8” / 1/16” (T), 7/8” (C)				
VS	2-68-025	068	AZ110	733	N/A		CLS 1,113# / +1/16” /-7/16” (NOR), +1/16 / -7/16” (MAX)				
VS	2-68-028	068	AZ104	754	N/A		CLS 758# / +.95” / -.05” (NOR), +1.29” / -.34” (MAX)				
DS	2-68-030	068	AZ110	732			CLS 3” / 1/4” (T), 3/8” (C)				
DS	2-68-031	068	AZ104	733			CLS 2-1/16” / 0” (T), 9/16” (C)				
DS	2-68-032	068	AZ98	736			CLS 1.81” / 0” (T), 1-3/16” (C)				
DS	2-68-033	068	AZ98	736			CLS 2-1/8” / 5/16” (T), 3/8” (C)				
DS	2-68-034	068	AZ98	733			CLS 1-1/8” / 1” (T), 1/16” (C)				
DS	2-68-036	068	AZ98	733			CLS 1-15/16” / 1/4” (T), 3/4” (C)				

Attachment 20
(Page 31 of 37)

DYNAMIC SNUBBERS, VARIABLE SPRINGS AND CONSTANT SPRINGS 350° (345°-355°) PLATEAU DATA

Date _____

TYPE SUPT	SUPPORT IDENTIFIER	SYS	LOCATION	ELEV	SERIAL NO.	TEMP °F	SET POINT / MOVEMENT	SCALE READING	PERFORMER INIT/ DATE	VERIFIER INIT/ DATE	COMMENTS
DS	2-68-042	068	AZ104	735			CLS 3-1/4” / 1/16” (T), 13/16” (C)				
VS	2-68-043	068	AZ108	735	N/A		CLS 678# / +.06” / -.32” (NOR), +.06” / -.32” (MAX)				
DS	2-68-044	068	AZ108	734			CLS 1-7/16” (+1/16”, -3/8”) / 5/8” (T), 1/16” (C)				
DS	2-68-050	068	AZ104	733			CLS 1-3/4” / 9/16”” (T), 1/8” (C)				
DS	2-68-053	068	AZ98	733			CLS 2-3/8” / 1/8” (T), 1-1/16” (C)				
DS	2-68-093	068	AZ100	784			CLS 3/4” / 4-5/8” (T), 1/8” (C)				
CS	2-68-094	068	AZ99	791	N/A		CLS 3/4” / 4-1/2” (UP)				
DS	2-68-096	068	AZ104	784			CLS 11/16” (± 1/8) / 3-13/16” (T), 1/8” (C)				
VS	2-68-334	068	AZ47	707	N/A		CLS 153# / +.01” / -.20” (NOR), +.11” / -.26” (MAX)				
DS	2-68-348	068	AZ142	706			CLS 162# . +.03” / -.63” (NOM), +.03” / -.75” (MAX)				
VS	2-68-379	068	AZ323	707	N/A		CLS 124# / 3/4” (DOWN)				
VS	2-68-382	068	AZ321	708	N/A		CLS 157# / .52” (DOWN (NOR), .78” (DOWN) (MAX)				
DS	2-68-404E	068	AZ82	754			CLS 5-3/8” / 1/16” (T), 4-7/8” (C)				
DS	2-68-404W	068	AZ82	754			CLS 5-3/8” / 1/16” (T), 4-7/8” (C)				
DS	2-68-406E	068	AZ87	747			CLS 3” / 1/4” (T), 1/4” (C)				
DS	2-68-406W	068	AZ87	747			CLS 3” / 1/4” (T), 1/4” (C)				

Attachment 20
(Page 32 of 37)

DYNAMIC SNUBBERS, VARIABLE SPRINGS AND CONSTANT SPRINGS 350° (345°-355°) PLATEAU DATA

Date _____

TYPE SUPT	SUPPORT IDENTIFIER	SYS	LOCATION	ELEV	SERIAL NO.	TEMP °F	SET POINT / MOVEMENT	SCALE READING	PERFORMER INIT/ DATE	VERIFIER INIT/ DATE	COMMENTS
DS	2-68-412N	068	AZ99	786			CLS 1-3/4” / 1/8” (T), 5/16” (C)				
DS	2-68-412S	068	AZ99	788			CLS 1-3/4” / 1/8” (T), 5/16” (C)				
DS	2-68-415N	068	AZ97	787			CLS 2” / 7/8” (T), 1/16” (C)				
DS	2-68-415S	068	AZ97	787			CLS 2” / 1-1/16” (T), 1/16” (C)				
DS	2-68-427	068	AZ97	778			CLS 2-3/4” / 1/8” (T), 3/8” (C)				
DS	2-68-429E	068	AZ104	761			CLS 2-9/16” / 1/4” (T), 9/16” (C)				
DS	2-68-429W	068	AZ104	761			CLS 2-9/16” / 1/4” (T), 9/16” (C)				
DS	2-47A465-1-108	068	AZ110	729			CLS 2-3/4” /1/16” (T), 1/2” (C)				
DS	47A465-2-23	068	AZ100	776			CLS 3-7/8” / 0” (T), 3-3/16” (C)				
DS	47A465-2-41	068	AZ104	775			CLS 1-1/2” / 1/16” (T), 1/4” (C)				
CS	47A465-2-42	068	AZ104	775	N/A		CLS 3/4” / 2.96” (UP)				
DS	47A465-2-46	068	AZ97	758			CLS 3” / 0” (T), 2-1/8” (C)				
VS	47A465-2-47	068	AZ100	758	N/A		CLS 130# / 2.10” (NOR), 2.12” (MAX)				
VS	2-47A465-2-81	068	AZ99	737	N/A		CLS 50# / +1/4” / -0” (NOR), +5/16” / -1/16” (MAX)				
DS	47A465-4-7E	068	AZ104	736			CLS 1-3/4 / 0” (T), 3/8” (C)				
DS	47A465-4-7W	068	AZ104	736			CLS 1-3/8 ” / 1/16” (T), 3/16” (C)				
DS	47A465-8-60	068	AZ335	742			CLS 2-1/2” / 1/16” (T), 7/16” (C)				
DS	47A465-8-61	068	AZ65	742			CLS 2-11/16” / 1/16” (T), 1-11/16” (C)				

Attachment 20
(Page 33 of 37)

DYNAMIC SNUBBERS, VARIABLE SPRINGS AND CONSTANT SPRINGS 350° (345°-355°) PLATEAU DATA

Date _____

TYPE SUPT	SUPPORT IDENTIFIER	SYS	LOCATION	ELEV	SERIAL NO.	TEMP °F	SET POINT / MOVEMENT	SCALE READING	PERFORMER INIT/ DATE	VERIFIER INIT/ DATE	COMMENTS
DS	47A465-8-63	068	AZ145	742			CLS 2-3/4” / 1/16” (T), 1-1/2” (C)				
VS	47A465-8-73	068	AZ40	752	N/A		CLS 144# / +2-1/6” / -1/16” (NOR), +2-7/16” / -7/16” (MAX)				
VS	2-47A465-8-97	068	AZ111	742	N/A		CLS 100 / +3/4” / -1/16” (NOR), +7/8” / -3/16” (MAX)				

Attachment 20
(Page 34 of 37)

DYNAMIC SNUBBERS, VARIABLE SPRINGS AND CONSTANT SPRINGS 350° (345°-355°) PLATEAU DATA

Date _____

SAFETY INJECTION PUMP B-B DISCHARGE TO LOOP #4 HOT LEG											
TYPE SUPT.	SUPPORT IDENTIFIER	SYS	LOCATION	ELEV.	SERIAL NO.	TEMP °F	SET POINT / MOVEMENT	SCALE READING	PERFORMER INIT/ DATE	VERIFIER INIT/ DATE	COMMENTS
DS	2-74-015	074	AZ0	724			CLS 1-3/4” / .55” (T), .02” (C)				
DS	2-74-017	074	AZ0	722			CLS 1” / 3/16” (T), 0” (C)				

FROM LOOP #4 HOT LEG TO RHR PUMPS A AND B SUCTION											
TYPE SUPT.	SUPPORT IDENTIFIER	SYS	LOCATION	ELEV.	SERIAL NO.	TEMP °F	SET POINT / MOVEMENT	SCALE READING	PERFORMER INIT/ DATE	VERIFIER INIT/ DATE	COMMENTS
COMMON											
VS	2-74-022	074	AZ354	716	N/A		CLS 10,515# / +1/16 / -3/4” (NOR), +1/16” / -3/4” (MAX)				
DS	47A432-3-4	074	AZ349	707			CLS 3-3/4” / 7/16” (T), 1/16” (C)				
DS	2-74-010	074	AZ354	707			CLS 3” / 7/16” (T), 1/16” (C)				
DS	2-74-011	074	AZ361	707			CLS 4” / .06” (T), 1.64” (C)				
VS	2-74-012	074	AZ347	707	N/A		CLS 2,340# / +.03” / -.66”(NOR), +.17” / -.83” (MAX)				
VS	2-47A432-3-17	074	AZ354	707	N/A		CLS 3,482# / +1/16” / -3/8” (NOR) +1/16” / -3/8” (MAX)				
DS	2-74-008	074	AZ354	707			CLS 4-1/4” / 7/16” (T), 1-1/16” (C)				
DS	47A432-2-2	063	V-A11	718			CLS 3” / 0” (T), 13/16” (C)				

Attachment 20
(Page 35 of 37)

DYNAMIC SNUBBERS, VARIABLE SPRINGS AND CONSTANT SPRINGS 350° (345°-355°) PLATEAU DATA

Date _____

FROM LOOP #4 HOT LEG TO RHR PUMPS A AND B SUCTION											
TYPE SUPT.	SUPPORT IDENTIFIER	SYS	LOCATION	ELEV.	SERIAL NO.	TEMP °F	SET POINT / MOVEMENT	SCALE READING	PERFORMER INIT/ DATE	VERIFIER INIT/ DATE	COMMENTS
VS	63-2SIS-V179	063	V-A11	697	N/A		CLS 2,519# / +1/4" / -1/16" (NOR), +5/16" / -5/32" (MAX)				
VS	63-2SIS-V180	063	V-A11	723	N/A		CLS 4,306# / +1/8" / -0" (NOR), +3/16" / -3/16" (MAX)				
DS	2-47A432-6-17	063	V-A11	693			CLS 2-5/8" / 1/16" (T), 3/16" (C)				
FROM LOOP #4 HOT LEG TO RHR PUMP A SUCTION											
VS	63-2SIS-V134	063	V-A11	678	N/A		CLS 4,360# / +1/8" / -0" (NOR), +1/16" / -1/4" (MAX)				
VS	63-2SIS-V136	063	V-A11	676	N/A		CLS 2,082# / -5/32" (NOR), +1/32, -3/16" (MAX)				
VS	63-2SIS-V139NW	063	V-A10	677	N/A		CLS 263# / +0" / -.13" (NOR), +0" / -.14" (MAX)				
VS	63-2SIS-V139SE	063	V-A10	677	N/A		CLS 331# / +0" / -.13" (NOR), +0" / -.14" (MAX)				
FROM LOOP #4 HOT LEG TO RHR PUMP B SUCTION											
VS	63-2SIS-V158	063	U-A11	678	N/A		CLS 6,135 / +1/16" / -0" (NOR), +1/8" / -1/8" (MAX)				
VS	63-2SIS-V163N	063	U-A10	677	N/A		CLS 1,850# / -1/16" (NOR), +0" / -1/8" (MAX)				
VS	63-2SIS-V163S	063	U-A10	677	N/A		CLS 1,244# / -1/16" (NOR), +0" / -1/8" (MAX)				

Attachment 20
(Page 36 of 37)

DYNAMIC SNUBBERS, VARIABLE SPRINGS AND CONSTANT SPRINGS 350° (345°-355°) PLATEAU DATA

Date _____

RHR PUMP A-A DISCHARGE TO RHR HEAT EXCHANGER A											
TYPE SUPT.	SUPPORT IDENTIFIER	SYS	LOCATION	ELEV.	SERIAL NO.	TEMP °F	SET POINT / MOVEMENT	SCALE READING	PERFORMER INIT/ DATE	VERIFIER INIT/ DATE	COMMENTS
DS	74-2RHR-R096	074	V-A11	688			CLS 3” / 1/16” (T), 1” (C)				
RHR HEAT EXCHANGER A DISCHANGE TO COLD LEG INJECTION											
DS	74-2RHR-R014N	074	W-A10	732			CLS 1” / 0” (T), 1/4” (C)				
DS	74-2RHR-R014S	074	W-A10	732			CLS 1” / 0” (T), 1/4” (C)				
VS	74-2RHR-V015N	074	W-A10	733	N/A		CLS 661# / +1/4”, -1/16” (NOR), +1/4” / -1/16” (MAX)				
VS	74-2RHR-V015S	074	W-A10	733	N/A		CLS 661# / +1/4”, -1/16” (NOR), +1/4” / -1/16” (MAX)				
DS	74-2RHR-R028	074	V-A11	732			CLS 4-1/16” / 1/16” (T), 1/16” (C)				
VS	74-2RHR-V121	074	W-A10	719	N/A		CLS 711# / +1/16”, -0” (NOR), +1/16”, -0” (MAX)				
DS	74-2RHR-R216	074	W-A11	728			CLS 2” / 1/2” (T), 1/16” (C)				
DS	74-2RHR-R220	074	W-A11	729			CLS 3” / 1/16” (T), 1/8” (C)				
RHR HEAT EXCHANGER A BYPASS LINE											
TYPE SUPT.	SUPPORT IDENTIFIER	SYS	LOCATION	ELEV.	SERIAL NO.	TEMP °F	SET POINT / MOVEMENT	SCALE READING	PERFORMER INIT/ DATE	VERIFIER INIT/ DATE	COMMENTS
DS	74-2RHR-R037	074	W-A9	730			CLS 3” / 3/8” (T), 1/16” (C)				
VS	74-2RHR-V038	074	W-A9	730	N/A		CLS 2472# / +7/16”, -1/16” (NOR), +7/16” / -1/16” (MAX)				

Attachment 20
(Page 37 of 37)

DYNAMIC SNUBBERS, VARIABLE SPRINGS AND CONSTANT SPRINGS 350° (345°-355°) PLATEAU DATA

Date _____

RHR PUMP B-B DISCHARGE TO RHR HEAT EXCHANGER B											
TYPE SUPT.	SUPPORT IDENTIFIER	SYS	LOCATION	ELEV.	SERIAL NO.	TEMP °F	SET POINT / MOVEMENT	SCALE READING	PERFORMER INIT/ DATE	VERIFIER INIT/ DATE	COMMENTS
DS	74-2RHR-R058	074	V-A11	689			CLS 2-1/2" / 1/16" (T), 1" (C)				
RHR HEAT EXCHANGER B DISCHANGE TO COLD LEG INJECTION											
VS	74-2RHR-V002	074	V-A10	729	N/A		CLS 1088# / +.31", -.09" (NOR), +.50" / -.25" (MAX)				
DS	74-2RHR-R003E	074	V-A10	727			CLS 2" / 1/32" (T), 9/16" (C)				
DS	74-2RHR-R003W	074	V-A10	727			CLS 1-1/2" / 1/32" (T), 9/16" (C)				
DS	74-2RHR-R006	074	V-A10	721			CLS 2-1/4" / 1/4" (T), 0" (C)				
VS	74-2RHR-V011	074	V-A10	730	N/A		CLS 1624# / +7/16", -1/8" (NOR), +5/8" / -5/16" (MAX)				
DS	74-2RHR-R230	074	W-A11	729			CLS 2-1/4" / 1/16" (T), 1/2" (C)				
DS	74-2RHR-R232	074	W-A11	729			CLS 3" / 0" (T), 7/16" (C)				
VS	2-47A435-2-2	074	V-A10	719	N/A		CLS 1478# / +1/16", -1/16" (NOR), +1/8" / -1/8" (MAX)				
RHR HEAT EXCHANGER B BYPASS LINE											
TYPE SUPT.	SUPPORT IDENTIFIER	SYS	LOCATION	ELEV.	SERIAL NO.	TEMP °F	SET POINT / MOVEMENT	SCALE READING	PERFORMER INIT/ DATE	VERIFIER INIT/ DATE	COMMENTS
VS	74-2RHR-V041	074	V-A9	734	N/A		CLS 1509# / +9/16", -1/16" (NOR), +11/16" / -1/16" (MAX)				

Attachment 21
(Page 1 of 37)

DYNAMIC SNUBBERS, VARIABLE SPRINGS AND CONSTANT SPRINGS 450° (445°-455°) PLATEAU DATA

Date _____

COLD LOAD SETTING (CLS) INCREMENT (INC)

TYPE SUPT	SUPPORT IDENTIFIER	SYS	LOCATION	ELEV.	SERIAL NO.	TEMP °F	SET POINT / MOVEMENT	SCALE READING	PERFORMER INIT/ DATE	VERIFIER INIT/ DATE	COMMENTS
DS	2-01A-301	001	AZ4	773			CLS 3"/ 1-13/16" (T), 0" (C)				
CS	2-01A-302N	001	AZ5	767	N/A		CLS 8.75 INC / +2.35, - 0 INC				
CS	2-01A-302S	001	AZ5	767	N/A		CLS 8.75 INC / +2.35, - 0 INC				
DS	2-01A-303N	001	AZ4	761			CLS 3" / .011" (T), 2.365" (C)				
DS	2-01A-303S	001	AZ4	761			CLS 5-1/2" / .011" (T), 2.365" (C)				
DS	2-01A-304E	001	SOUTH VLV RM	733			CLS 1-1/2" / 11/16" (T), 13/16" (C)				
DS	2-01A-304W	001	SOUTH VLV RM	733			CLS 1-1/2" / 11/16" (T), 13/16" (C)				
VS	2-01A-305	001	AZ4	737	N/A		CLS 13,973# / 1.94" UP (NOR), 2.09" UP (MAX)				
DS	2-01A-307N	001	AZ5	703			CLS 3-5/8" / 3/8" (T), 0" (C)				
DS	2-01A-307S	001	AZ5	703			CLS 3-3/8" / 3/8" (T), 0" (C)				
DS	2-01A-308	001	SOUTH VLV RM	737			CLS 3" / .22" (T), .28" (C)				
VS	2-01A-309	001	SOUTH VLV RM	740	N/A		CLS 27,083# / +.005" / -.17" (NOR), +.23" / -.18" (MAX)				
DS	2-01A-312	001	SOUTH VLV RM	742			CLS 2-1/2" / 0" (T), 3/8" (C)				
DS	2-01A-313	001	J-R6 S VLV RM				CLS 3-1/8" / 15/16" (T), 1/8" (C)				
DS	2-01A-317	001	SOUTH VLV RM	769			CLS 2-1/2" / 7/8" (T), 1/8" (C)				
DS	2-01A-340	001	AZ160	771			CLS 3-3/8" / 1/16" (T), 11/16" (C)				
CS	2-01A-342N	001	AZ176	767	N/A		CLS 7.5 INC / +1.83" / -.08"				

Attachment 21
(Page 2 of 37)

DYNAMIC SNUBBERS, VARIABLE SPRINGS AND CONSTANT SPRINGS 450° (445°-455°) PLATEAU DATA

Date _____

TYPE SUPT	SUPPORT IDENTIFIER	SYS	LOCATION	ELEV.	SERIAL NO.	TEMP °F	SET POINT / MOVEMENT	SCALE READING	PERFORMER INIT/ DATE	VERIFIER INIT/ DATE	COMMENTS
CS	2-01A-342S	001	AZ176	767	N/A		CLS 7.5 INC / +1.83” / -.08”				
DS	2-01A-343N	001	AZ175	761			CLS 3-1/2” / 4.03” (T), 1.61” (C)				
DS	2-01A-343S	001	AZ175	761			CLS 3-1/2” / 4.03” (T), 1.61” (C)				
VS	2-01A-344	001	AZ171	744	N/A		CLS 13,438# / 0” / -1/8” (NOR), 0” / -1/8” (MAX)				
DS	2-01A-348	001	NORTH VLV RM	737			CLS 3.35” / .03” (T), .73” (C)				
DS	2-01A-349	001	NORTH VLV RM	741			CLS 1” / .11” (T), .005” (C)				
DS	2-01A-350	001	NORTH VLV RM	755			CLS 3” / 1.12” (T), .05” (C)				
DS	2-01A-355	001	NORTH VLV RM	769			CLS 2-1/2” / .81” (T), .05” (C)				
DS	2-01A-380	001	AZ196	770			CLS 3-3/4” / 1/16” (T), 3/4” (C)				
DS	2-01A-381	001	AZ183	722			CLS 2-1/2” / 15/16” (T), 1/16” (C)				
CS	2-01A-382N	001	AZ182	770	N/A		CLS 7.5 INC / +1.93” / -.06”				
CS	2-01A-382S	001	AZ182	770	N/A		CLS 7.5 INC / +1.93” / -.06”				
DS	2-01A-383N	001	AZ183	759			CLS 3-1/2” / .03” (T),1.42” (C)				
DS	2-01A-383S	001	AZ183	759			CLS 2-1/2” / .03” (T), 1.42” (C)				
VS	2-01A-384E	001	AZ184	738	N/A		CLS 7,179# / +1/4” / -1/16” (NOR), +3/8” / -1/16” (MAX)				
VS	2-01A-384W	001	AZ184	738	N/A		CLS 7,179# / +1/4” / -1/16” (NOR), +3/8” / -1/16” (MAX)				
VS	2-01A-386	001	NORTH VLV RM	737	N/A		CLS 21,001 / +.04” / -.82” (NOR), +1.5” / -.82” (MAX)				

Attachment 21
(Page 3 of 37)

DYNAMIC SNUBBERS, VARIABLE SPRINGS AND CONSTANT SPRINGS 450° (445°-455°) PLATEAU DATA

Date _____

TYPE SUPT	SUPPORT IDENTIFIER	SYS	LOCATION	ELEV.	SERIAL NO.	TEMP °F	SET POINT / MOVEMENT	SCALE READING	PERFORMER INIT/ DATE	VERIFIER INIT/ DATE	COMMENTS
DS	2-01A-387	001	NORTH VLV RM	737			CLS 3” / .06” (T), 1.33” (C)				
DS	2-01A-389N	001	NORTH VLV RM	734			CLS 3.69” / .66” (T), 1.11” (C)				
DS	2-01A-389S	001	NORTH VLV RM	734			CLS 3.69” / .66” (T), 1.11” (C)				
VS	2-01A-389N	001	NORTH VLV RM	737	N/A		CLS 17,572# / +.03” / -.61” (NOR), +1.12” / -.61” (MAX)				
VS	2-01A-389S	001	NORTH VLV RM	737	N/A		CLS 12,131# / +.03” / -.61” (NOR), +1.12” / -.61” (MAX)				
DS	2-01A-391	001	NORTH VLV RM	741			CLS 2” / 7/32” (T), 1/32” (C)				
DS	2-01A-392	001	NORTH VLV RM	756			CLS 3-3/4” / 1-5/8” (T), 1/16” (C)				
DS	2-01A-397	001	NORTH VLV RM	769			CLS 2-1/2” / .08” (T), 1.81” (C)				
CS	2-01A-422N	001	AZ357	767	N/A		CLS 9 INC / +1.86” / -.05”				
CS	2-01A-422S	001	AZ357	767	N/A		CLS 9 INC / +1.86” / -.05”				
DS	2-01A-423N	001	AZ357	760			CLS 3-3/4” / 1/16” (T), 1-1/2” (C)				
DS	2-01A-423S	001	AZ357	760			CLS 3-3/4” / 1/16” (T), 1-1/2” (C)				
DS	2-01A-424	001	AZ357	745			CLS 3” / 13/16” (T), 1/16” (C)				
VS	2-01A-425E	001	AZ356	737	N/A		CLS 6,685# / +.15” (NOR), +.38” / -.07” (MAX)				
VS	2-01A-425W	001	AZ356	737	N/A		CLS 6,685# / +.15” (NOR), +.38” / -.07” (MAX)				
VS	2-01A-427	001	SOUTH VLV RM	753	N/A		CLS 17,875# / +.04” / -.79” (NOR), +.85” / -.17” (MAX)				

Attachment 21
(Page 4 of 37)

DYNAMIC SNUBBERS, VARIABLE SPRINGS AND CONSTANT SPRINGS 450° (445°-455°) PLATEAU DATA

Date _____

TYPE SUPT	SUPPORT IDENTIFIER	SYS	LOCATION	ELEV.	SERIAL NO.	TEMP °F	SET POINT / MOVEMENT	SCALE READING	PERFORMER INIT/ DATE	VERIFIER INIT/ DATE	COMMENTS
DS	2-01A-428	001	SOUTH VLV RM	737			CLS 3-1/8” / 7/16” (T), 0” (C)				
DS	2-01A-429N	001	SOUTH VLV RM	732			CLS 3-3/4” / 1/16” (T), 3/16” (C)				
DS	2-01A-429S	001	SOUTH VLV RM	732			CLS 3-3/4” / 1/16” (T), 3/16” (C)				
VS	2-01A-431	001	SOUTH VLV RM	737	N/A		CLS 23,297# / +1/32” / -3/8” (NOR), +1/32” / -3/8” (MAX)				
DS	2-01A-435	001	SOUTH VLV RM	755			CLS 3-7/16" / .06" (T), 1.28" (C)				
DS	2-01A-439	001	SOUTH VLV RM	769			CLS 2-1/2" / 1/16" (T), 1-7/16" (C)				
DS	47A400-16	001	T-T16	737			CLS 11.5” / 0” (T), 11” (C)				
DS	47A400-17	001	N-T16	732			CLS 3” / 8-1/2” (T), 0” (C)				
DS	47A400-18	001	K-T14	722			CLS 3” / 5/16” (T), 0” (C)				
DS	47A400-19	001	K-T13	722			CLS 5” / 0” (T), 3-5/8” (C)				
DS	47A400-20	001	J-T13	718			CLS 4” / 0” (T), 1-5/8” (C)				
DS	47A400-21	001	K-T13	722			CLS 1” / 3-9/16” (T), 0” (C)				
DS	47A400-22T	001	K-T13	722			CLS 4-1/4” / 0” (T), 2” (C)				
DS	47A400-22B	001	K-T13	722			CLS 3-1/4” / 0” (T), 2” (C)				
DS	47A400-23	001	N-T16	732			CLS 1-5/8” / 8-13/16” (T), 0” (C)				
DS	47A400-24T	001	T-T16	737			CLS 1-1/8” / 10-1/4” (T), 0” (C)				
DS	47A400-24B	001	T-T16	737			CLS 1-1/8” / 10-1/4” (T), 0” (C)				
DS	47A400-25T	001	M-T15	723			CLS 9/16” / 4-13/16” (T), 0” (C)				
DS	47A400-25B	001	M-T15	723			CLS 9/16” / 4-13/16” (T), 0” (C)				

Attachment 21
(Page 5 of 37)

DYNAMIC SNUBBERS, VARIABLE SPRINGS AND CONSTANT SPRINGS 450° (445°-455°) PLATEAU DATA

Date _____

TYPE SUPT	SUPPORT IDENTIFIER	SYS	LOCATION	ELEV.	SERIAL NO.	TEMP °F	SET POINT / MOVEMENT	SCALE READING	PERFORMER INIT/ DATE	VERIFIER INIT/ DATE	COMMENTS
DS	47A400-26	001	J-T12	718			CLS 3-1/2” / 0” (T), 1-1/2” (C)				
DS	47A400-27	001	M-T15	722			CLS 1/2” / 4-13/16” (T), 0” (C)				
DS	47A400-28	001	J-T12	726			CLS 2-1/2”” / 15/16” (T), 0” (C)				
DS	47A400-29	001	J-T12	726			CLS 2” / 1” (T), 0” (C)				
DS	47A400-30T	001	J-T10	718			CLS 4” / 0” (T), 1-13/16+” (C)				
DS	47A400-30B	001	J-T10	718			CLS 4” / 0” (T), 1-13/16” (C)				
CS	01A-2MS-V007N	001	M-T15	727	N/A		CLS 6,238# / 1-3/8” (DOWN)				
CS	01A-2MS-V007S	001	M-T15	727	N/A		CLS 6,238# / 1-3/8” (DOWN)				
CS	01A-2MS-V008N	001	M-T14	727	N/A		CLS 6,960# / 1-7/8” (DOWN)				
CS	01A-2MS-V008S	001	M-T14	727	N/A		CLS 6,960# / 1-7/8” (DOWN)				
CS	01A-2MS-V009N	001	M-T13	727	N/A		CLS 7,242# / 2-1/2” (DOWN)				
CS	01A-2MS-V009S	001	M-T13	727	N/A		CLS 7,242# / 2-1/2” (DOWN)				
CS	01A-2MS-V010E	001	K-T12	727	N/A		CLS 7,135# / 2-5/8” (DOWN)				
CS	01A-2MS-V010W	001	K-T12	727	N/A		CLS 7,135# / 2-5/8” (DOWN)				
VS	01A-2MS-V011E	001	K-T12	725	N/A		CLS 4,615# / 2-9/16” (DOWN)				
VS	01A-2MS-V011W	001	K-T12	725	N/A		CLS 4,615# / 2-9/16” (DOWN)				
VS	01A-2MS-V012E	001	J-T12	725	N/A		CLS 4,781# / 2-1/2” (DOWN)				
VS	01A-2MS-V012W	001	J-T12	725	N/A		CLS 4,781# / 2-1/2” (DOWN)				
CS	01A-2MS-V027E	001	M-T16	727	N/A		CLS 6,580# / 1-1/16” (DOWN)				
CS	01A-2MS-V027W	001	M-T16	727	N/A		CLS 6,580# / 1-1/16” (DOWN)				

Attachment 21
(Page 6 of 37)

DYNAMIC SNUBBERS, VARIABLE SPRINGS AND CONSTANT SPRINGS 450° (445°-455°) PLATEAU DATA

Date _____

TYPE SUPT	SUPPORT IDENTIFIER	SYS	LOCATION	ELEV.	SERIAL NO.	TEMP °F	SET POINT / MOVEMENT	SCALE READING	PERFORMER INIT/ DATE	VERIFIER INIT/ DATE	COMMENTS
CS	01A-2MS-V028N	001	K-T15	727	N/A		CLS 6,271# / 1-13/16” (DOWN)				
CS	01A-2MS-V028S	001	K-T15	727	N/A		CLS 6,271# / 1-13/16” (DOWN)				
CS	01A-2MS-V029N	001	K-T14	727	N/A		CLS 5,073# / 2-9/16” (DOWN)				
CS	01A-2MS-V029S	001	K-T14	727	N/A		CLS 5,073# / 2-9/16” (DOWN)				
CS	01A-2MS-V030N	001	K-T13	727	N/A		CLS 4,894# / 2-15/16” (DOWN)				
CS	01A-2MS-V030S	001	K-T13	727	N/A		CLS 4,894# / 2-15/16” (DOWN)				
CS	01A-2MS-V031E	001	K-T13	727	N/A		CLS 6,730# / 3” (DOWN)				
CS	01A-2MS-V031W	001	K-T13	727	N/A		CLS 6,730# / 3” (DOWN)				
VS	01A-2MS-V032E	001	J-T13	725	N/A		CLS 7,171 / 2-5/8” (DOWN)				
VS	01A-2MS-V032W	001	J-T13	725	N/A		CLS 7,171 / 2-5/8” (DOWN)				
CS	01A-2MS-V047E	001	M-T16	727	N/A		CLS 7,785# / 1-3/16” (DOWN)				
CS	01A-2MS-V047W	001	M-T16	727	N/A		CLS 7,785# / 1-3/16” (DOWN)				
CS	01A-2MS-V048N	001	K-T15	727	N/A		CLS 7,400# / 2-1/16” (DOWN)				
CS	01A-2MS-V048S	001	K-T15	727	N/A		CLS 7,400# / 2-1/16” (DOWN)				
CS	01A-2MS-V049N	001	K-T14	727	N/A		CLS 4,309# / 2-1/16” (DOWN)				
CS	01A-2MS-V049S	001	K-T14	727	N/A		CLS 4,309# / 2-1/16” (DOWN)				
CS	01A-2MS-V050N	001	K-T14	727	N/A		CLS 3,710# / 3” (DOWN)				
CS	01A-2MS-V050S	001	K-T14	727	N/A		CLS 3,710# / 3” (DOWN)				
CS	01A-2MS-V051E	001	K-T13	727	N/A		CLS 6,181# / 3-1/16” (DOWN)				
CS	01A-2MS-V051W	001	K-T13	727	N/A		CLS 6,181# / 3-1/16” (DOWN)				

Attachment 21
(Page 7 of 37)

DYNAMIC SNUBBERS, VARIABLE SPRINGS AND CONSTANT SPRINGS 450° (445°-455°) PLATEAU DATA

Date _____

TYPE SUPT	SUPPORT IDENTIFIER	SYS	LOCATION	ELEV.	SERIAL NO.	TEMP °F	SET POINT / MOVEMENT	SCALE READING	PERFORMER INIT/ DATE	VERIFIER INIT/ DATE	COMMENTS
VS	01A-2MS-V052E	001	J-T13	725	N/A		CLS 5,396# / 2-5/8” (DOWN)				
VS	01A-2MS-V052W	001	J-T13	725	N/A		CLS 5,396# / 2-5/8” (DOWN)				
CS	01A-2MS-V059N	001	M-T15	727	N/A		CLS 6,363# / 1-1/8” (DOWN)				
CS	01A-2MS-V059S	001	M-T15	727	N/A		CLS 6,363# / 1-1/8” (DOWN)				
CS	01A-2MS-V060N	001	M-T14	727	N/A		CLS 6,775# / 1-3/4” (DOWN)				
CS	01A-2MS-V060S	001	M-T14	727	N/A		CLS 6,775# / 1-3/4” (DOWN)				
CS	01A-2MS-V061N	001	M-T12	727	N/A		CLS 8,158# / 2-3/16” (DOWN)				
CS	01A-2MS-V061S	001	M-T12	727	N/A		CLS 8,158# / 2-3/16” (DOWN)				
CS	01A-2MS-V062E	001	M-T12	727	N/A		CLS 9,549# / 2-7/16” (DOWN)				
CS	01A-2MS-V062N	001	M-T12	727	N/A		CLS 9,549# / 2-7/16” (DOWN)				
VS	01A-2MS-V063E	001	K-T12	725	N/A		CLS 5,731# / 2-1/2” (DOWN)				
VS	01A-2MS-V063W	001	K-T12	725	N/A		CLS 5,731# / 2-1/2” (DOWN)				
VS	01A-2MS-V064E	001	J-T12	725	N/A		CLS 2,676# / 2-3/8” (DOWN)				
VS	01A-2MS-V064W	001	J-T12	725	N/A		CLS 2,676# / 2-3/8” (DOWN)				
VS	01A-2MS-V065	001	J-T13	727	N/A		CLS 22,564# / 2-5/8” (DOWN)				
VS	01A-2MS-V066	001	J-T12	727	N/A		CLS 28,401# / 2-5/8” (DOWN)				
VS	01A-2MS-V067	001	J-T11	727	N/A		CLS 9,925# / 2-1/4” (DOWN)				
VS	01A-2MS-V068	001	J-T10	727	N/A		CLS 8,977# / 2” (DOWN)				
VS	01A-2MS-V069	001	H-T10	727	N/A		CLS 9,104# / 1-1/2” (DOWN)				
VS	01A-2MS-V070	001	H-T10	753	N/A		CLS 11,165# / 1” (DOWN)				

Attachment 21
(Page 8 of 37)

DYNAMIC SNUBBERS, VARIABLE SPRINGS AND CONSTANT SPRINGS 450° (445°-455°) PLATEAU DATA

Date _____

TYPE SUPT	SUPPORT IDENTIFIER	SYS	LOCATION	ELEV.	SERIAL NO.	TEMP °F	SET POINT / MOVEMENT	SCALE READING	PERFORMER INIT/ DATE	VERIFIER INIT/ DATE	COMMENTS
VS	01A-2MS-V071	001	H-T10	753	N/A		CLS 16,404# / 1/2” (DOWN)				
VS	01A-2MS-V072	001	G-T10	753	N/A		CLS 8,860 / 3/32” (UP)				
VS	01A-2MS-V073	001	F-T10	753	N/A		CLS 8,336# / 1/2” (UP)				
VS	01A-2MS-V074	001	F-T10	753	N/A		CLS 2,317# / 3/4” (UP)				
VS	01A-2MS-V075	001	F-T10	721	N/A		CLS 1,660# / 7/16” (UP)				
VS	01A-2MS-V075	001	F-T10	721	N/A		CLS 1,660# / 7/16” (UP)				
VS	01A-2MS-V076	001	F-T11	725	N/A		CLS 1,792# / 3/16” (UP)				
VS	01A-2MS-V077	001	F-T10	720	N/A		CLS 1,609# / 5/16” (UP)				
VS	01A-2MS-V077	001	F-T10	720	N/A		CLS 1,609# / 5/16” (UP)				
VS	01A-2MS-V078	001	F-T11	725	N/A		CLS 1,880# / 5/16” (UP)				
VS	01A-2MS-V079	001	G-T10	721	N/A		CLS 1,565# / 1/4” (UP)				
VS	01A-2MS-V079	001	G-T10	721	N/A		CLS 1,565# / 1/4” (UP)				
VS	01A-2MS-V080	001	G-T11	725	N/A		CLS 1,805# / 3/16” (UP)				
VS	01A-2MS-V081	001	G-T10	721	N/A		CLS 1,500# / 1/8” (UP)				
VS	01A-2MS-V081	001	G-T10	721	N/A		CLS 1,500# / 1/8” (UP)				
VS	01A-2MS-V082	001	G-T11	725	N/A		CLS 1,810# / 3/16” (UP)				
VS	01A-2MS-V083	001	G-T10	721	N/A		CLS 1,426# / 1/4” (DN)				
VS	01A-2MS-V083	001	G-T10	721	N/A		CLS 1,426# / 1/4” (DN)				
VS	01A-2MS-V084	001	G-T11	724	N/A		CLS 1,719# / 3/16” (UP)				
VS	01A-2MS-V085	001	G-T10	721	N/A		CLS 1,290# / 3/8” (DN)				

Attachment 21
(Page 9 of 37)

DYNAMIC SNUBBERS, VARIABLE SPRINGS AND CONSTANT SPRINGS 450° (445°-455°) PLATEAU DATA

Date _____

TYPE SUPT	SUPPORT IDENTIFIER	SYS	LOCATION	ELEV.	SERIAL NO.	TEMP °F	SET POINT / MOVEMENT	SCALE READING	PERFORMER INIT/ DATE	VERIFIER INIT/ DATE	COMMENTS
VS	01A-2MS-V085	001	G-T10	721	N/A		CLS 1,290# / 3/8” (DN)				
VS	01A-2MS-V086	001	G-T11	727	N/A		CLS 1,928# / 3/16” (UP)				
VS	01A-2MS-V087	001	G-T10	721	N/A		CLS 1,290# / 3/8” (DN)				
VS	01A-2MS-V087	001	G-T10	721	N/A		CLS 1,290# / 3/8” (DN)				
VS	01A-2MS-V088	001	G-T11	727	N/A		CLS 1,933# / 3/16” (UP)				
VS	01A-2MS-V089	001	G-T10	721	N/A		CLS 1,261# / 3/8” (DN)				
VS	01A-2MS-V089	001	G-T10	721	N/A		CLS 1,261# / 3/8” (DN)				
VS	01A-2MS-V090	001	G-T11	724	N/A		CLS 1,733# / 3/16” (UP)				
VS	01A-2MS-V091	001	H-T10	721	N/A		CLS 1,263# / 1/2” (DN)				
VS	01A-2MS-V091	001	H-T10	721	N/A		CLS 1,263# / 1/2” (DN)				
VS	01A-2MS-V092	001	H-T11	724	N/A		CLS 1,710# / 3/16” (UP)				
VS	01A-2MS-V093	001	H-T10	721	N/A		CLS 1,081# / 5/8” (DN)				
VS	01A-2MS-V093	001	H-T10	721	N/A		CLS 1,081# / 5/8” (DN)				
VS	01A-2MS-V094	001	H-T11	727	N/A		CLS 2,135# / 3/16” (UP)				
VS	01A-2MS-V095	001	H-T10	721	N/A		CLS 1,196# / 3/4” (DN)				
VS	01A-2MS-V095	001	H-T10	721	N/A		CLS 1,196# / 3/4” (DN)				
VS	01A-2MS-V096	001	H-T11	727	N/A		CLS 2,140# / 3/16” (DN)				
VS	01A-2MS-V097	001	H-T10	720	N/A		CLS 1,187# / 7/8” (DN)				
VS	01A-2MS-V097	001	H-T10	720	N/A		CLS 1,187# / 7/8” (DN)				
VS	01A-2MS-V098	001	H-T11	724	N/A		CLS 1,717# / 3/16” (UP)				

Attachment 21
(Page 10 of 37)

DYNAMIC SNUBBERS, VARIABLE SPRINGS AND CONSTANT SPRINGS 450° (445°-455°) PLATEAU DATA

Date _____

TYPE SUPT	SUPPORT IDENTIFIER	SYS	LOCATION	ELEV	SERIAL NO.	TEMP °F	SET POINT / MOVEMENT	SCALE READING	PERFORMER INIT/ DATE	VERIFIER INIT/ DATE	COMMENTS
(STEP 6.9[2.2]) During Performance of 2-PTI-003A-03											
Main Feedwater Line to Steam Generator #1											
DS	2-03A-205	003	U-A15	731			CLS 2-5/16” / 1-7/16” (T), 0 (C)				
Main Feedwater Line to Steam Generator #2											
DS	2-03A-244	003	AZ172	731			CLS 3-1/2” / 1-1/4” (T), 1/4” (C)				
DS	2-03A-248	003	AZ165	731			CLS 4” / 1/16” (T), 1-1/8” (C)				
Main Feedwater Line to Steam Generator #3											
DS	2-03A-285	003	CRANE WALL AZ188	731			CLS 2-1/2” / 2” (T), 0” (C)				
DS	2-03A-289	003	AZ185	731			CLS 5” / 0 (T), 3-15/16” (C)				
Main Feedwater Line to Steam Generator #4											
DS	2-03A-320	003	CRANE WALL AZ352	729			CLS 3” / 0” (T), 2-3/16” (C)				
DS	2-03A-321	003	CRANE WALL AZ352	731			CLS 3” / 7/8” (T), 1/16” (C)				
DS	2-03A-323	003	U-A14	731			CLS 2-3/16” / 1-5/8” (T), 0” (C)				
DS	2-03A-328	003	U-A15	731			CLS 3” / 3” (T), 0” (C)				

Attachment 21
(Page 11 of 37)

DYNAMIC SNUBBERS, VARIABLE SPRINGS AND CONSTANT SPRINGS 450° (445°-455°) PLATEAU DATA

Date _____

TYPE SUPT	SUPPORT IDENTIFIER	SYS	LOCATION	ELEV	SERIAL NO.	TEMP °F	SET POINT / MOVEMENT	SCALE READING	PERFORMER INIT/ DATE	VERIFIER INIT/ DATE	COMMENTS
(STEP 6.9[2.3]) During Performance of 2-PTI-003A-03											
Main Feedwater Bypass Line to Steam Generator #1											
DS	2-03A-369	003	AZ35	759			CLS 3-1/8” / 0” (T), 1-1/16” (C)				
DS	2-03A-370	003	AZ35	759			CLS 3.075” / . 72” (T), 1.149” (C)				
DS	2-03A-374E	003	S VLV RM U-6	730			CLS 1-11/16” / .63” (T), .04” (C)				
DS	2-03A-374W	003	S VLV RM U-6	730			CLS 1-11/16” / .63” (T), .04” (C)				
DS	2-03A-377	003	S VLV RM U-A15	730			CLS 2-1/4” / .03” (T), .57” (C)				
VS	2-03A-377	003	S VLV RM U-A15	730	N/A		CLS 2,431 / +.04” / -.55” (NOR), +.11” / .62” (MAX)				
VS	2-03A-378	003	AZ35	759	N/A		CLS 1-11/16”” / .632” (T), .04” (C)				
Main Feedwater Bypass Line to Steam Generator #2											
VS	2-03A-408	003	AZ160	759	N/A		CLS 913# / 1” (UP)				
DS	2-03A-411	003	AZ120	759			CLS 3-7/16” / 0” (T), 13/16” (C)				
DS	2-03A-423	003	N VLV RM X-6	735			CLS 3-1/4” / .05” (T), .81” (C)				
DS	2-03A-426	003	N VLV RM A-8	730			CLS 3” ±1/4” / .08” (T), .16” (C)				
DS	47A401-8-20T	003	AZ163	758			CLS 2” / 1/16” (T), 9/16” (C)				
DS	47A401-8-20B	003	AZ163	758			CLS 2” / 1/16” (T), 9/16” (C)				

Attachment 21
(Page 12 of 37)

DYNAMIC SNUBBERS, VARIABLE SPRINGS AND CONSTANT SPRINGS 450° (445°-455°) PLATEAU DATA

Date _____

TYPE SUPT	SUPPORT IDENTIFIER	SYS	LOCATION	ELEV	SERIAL NO.	TEMP °F	SET POINT / MOVEMENT	SCALE READING	PERFORMER INIT/ DATE	VERIFIER INIT/ DATE	COMMENTS
(STEP 6.9[2.3]) During Performance of 2-PTI-003A-03											
Main Feedwater Bypass Line to Steam Generator #3											
DS	2-03A-455	003	AZ199	759			CLS 3-1/2” / 0” (T), 1-3/16” (C)				
DS	2-03A-468	003	AZ182	730			CLS 2-1/2” / 11/16” (T), 0” (C)				
VS	2-47A401-8-28	003	AZ210	759	N/A		CLS 988# / +1-5/16” / 0” (NOR), 1-15/16” / -5/8” (MAX)				
DS	2-47A401-8-29T	003	AZ210	759			CLS 2-1/2” / 1-1/16” (T), 1/16” (C)				
DS	2-47A401-8-29B	003	AZ210	759			CLS 2-1/2” / 1-1/16” (T), 1/16” (C)				
Main Feedwater Bypass Line to Steam Generator #4											
DS	2-03A-480	003	AZ350	761			CLS 4-1/4” / 1/8” (T), 1-9/16” (C)				
VS	2-03A-481	003	AZ350	759	N/A		CLS 397# / +1” / -1/16” (NOR), +1” / -1/16” (MAX)				
DS	2-03A-482T	003	AZ350	759			CLS 2-1/4” / 9/16” (T), 0” (C)				
DS	2-03A-482B	003	AZ350	759			CLS 2-1/4” / 9/16” (T), 0” (C)				
DS	2-03A-483	003	AZ280	759			CLS 3-5/8” / 1/16” (T), 1-1/8” (C)				
DS	2-03A-485	003	AZ350	759			CLS 2-1/2” / .16” (T), .59” (C)				
DS	2-03A-497	003	S VLV RM AZ6	730			CLS 3-1/8” / 1/4” (T), 1/32” (C)				
DS	2-03A-503	003	S VLV RM AZ18	739			CLS 2-1/2” / 1/8” (T), 1/16” (C)				
DS	47A401-8-21E	003	AZ351	739			CLS 2-11/16” / 5/16” (T), 11/16” (C)				
DS	47A401-8-21W	003	AZ351	739			CLS 2-11/16” / 5/16” (T), 11/16” (C)				
DS	2-47A427-3-57T	003	AZ331	759			CLS 1-7/8” / 0” (T), 5/8” (C)				
DS	2-47A427-3-57B	003	AZ331	759			CLS 1-7/8” / 0” (T), 5/8” (C)				

Attachment 21
(Page 13 of 37)

DYNAMIC SNUBBERS, VARIABLE SPRINGS AND CONSTANT SPRINGS 450° (445°-455°) PLATEAU DATA

Date _____

TYPE SUPT	SUPPORT IDENTIFIER	SYS	LOCATION	ELEV	SERIAL NO.	TEMP °F	SET POINT / MOVEMENT	SCALE READING	PERFORMER INIT/ DATE	VERIFIER INIT/ DATE	COMMENTS
(STEP 6.9[2.4]) During Performance of 2-PTI-003A-03											
Main Feedwater Warm Up Line for Steam Generator #1											
DS	2-03A-527	003	S VLV RM A6-M	730			CLS 7/16” / 1-5/16”” (T), -1/16” (C)				
Main Feedwater Warm Up Line for Steam Generator #3											
DS	2-03A-563	003	N VLV RM 6-A	730			CLS 4-5/8” / 1/8” (T), 4-3/16” (C)				
Main Feedwater Warm Up Line for Steam Generator #4											
DS	2-03A-582	003	S VLV RM AZ350	730			CLS 5-1/8” / 0” (T), 4-1/16” (C)				
DS	2-03A-584	003	S VLV RM 6-M	730			CLS 3” / .06” (T), 1.99” (C)				
DS	2-47A401-9-15	003	S VLV RM AZ350	730			CLS 3” / 1/16”” (T), 1-13/16” (C)				

Attachment 21
(Page 14 of 37)

DYNAMIC SNUBBERS, VARIABLE SPRINGS AND CONSTANT SPRINGS 450° (445°-455°) PLATEAU DATA

Date _____

TYPE SUPT	SUPPORT IDENTIFIER	SYS	LOCATION	ELEV	SERIAL NO.	TEMP °F	SET POINT / MOVEMENT	SCALE READING	PERFORMER INIT/ DATE	VERIFIER INIT/ DATE	COMMENTS
(STEP 6.9[2.5]) During Performance of 2-PTI-003B-05 Section 6.10 (TD) and Section 6.14 (MD)											
Auxiliary Feedwater From the Motor Driven Auxiliary Feed Pump 2A-A to Steam Generator #1											
VS	03B-2AFW-V047	003	T-A15	702	N/A		CLS 724# /+1/16" UP (NOR), + 1/16" UP (MAX)				
DS	03B-2AFW-R155	003	S VLV RM U-6	746			CLS 1-1/2" / 3/8" (T), 1-7/16" (C)				
Auxiliary Feedwater From the Motor Driven Auxiliary Feed Pump 2A-A to Steam Generator #2											
VS	03B-2AFW-V178N	003	AZ301	750	N/A		CLS 124# / +3/8" / -1/8" (NOR), +13/16" / -9/16" (MAX)				
VS	03B-2AFW-V178S	003	AZ301	750	N/A		CLS 71# / +3/8" / -1/8" (NOR), +13/16" / -9/16" (MAX)				
VS	2-03B-80	003	AZ301	744	N/A		CLS 282# / 1/4" (UP)				
DS	2-03B-71T	003	AZ143	740			CLS 1-1/2" / .47" (T), .69 (C)				
DS	2-03B-71B	003	AZ143	740			CLS 1-1/2" / .47" (T), .69 (C)				
DS	2-03B-82	003	AZ143	727			CLS 2-1/2" / 0" (T), 1/4" (C)				
VS	2-03B-82	003	AZ143	727	N/A		CLS 612# / +0" / -1/4" (NOR), +0" / -1/4" (MAX)				
DS	2-03A-400	003	AZ144	744			CLS 2" / .67"(T), .0" (C)				
DS	2-03A-401	003	AZ143	744			CLS 2" / .85" (T), 0" (C)				
DS	2-03A-402	003	AZ143	753			CLS 3" / 0" (T), .20" (C)				
DS	2-03A-404	003	AZ144	753			CLS 4-1/2" / 0" (T), .88" (C)				
DS	2-03A-415	003	AZ144	752			CLS 3" / .73" (T), 0" (C)				

Attachment 21
(Page 15 of 37)

DYNAMIC SNUBBERS, VARIABLE SPRINGS AND CONSTANT SPRINGS 450° (445°-455°) PLATEAU DATA

Date _____

TYPE SUPT	SUPPORT IDENTIFIER	SYS	LOCATION	ELEV	SERIAL NO.	TEMP °F	SET POINT / MOVEMENT	SCALE READING	PERFORMER INIT/ DATE	VERIFIER INIT/ DATE	COMMENTS
(STEP 6.9[2.5]) During Performance of 2-PTI-003B-05 Section 6.10 (TD) and Section 6.14 (MD)											
Auxiliary Feedwater From the Motor Driven Auxiliary Feed Pump 2B-B to Steam Generator #3											
DS	2-03B-35	003	AZ301	743			CLS 2” / 5/8” (T), 1/8” (C)				
VS	47A427-6-31	003	AZ301	743	N/A		CLS 343# / +5/8” / -1/8” (NOR), +5/8” / -1/16” (MAX)				
VS	47A427-6-32	003	AZ216	730	N/A		CLS 895# / +1/8” / -9/16” (NOR), +1/16” / -9/16” (MAX)				
DS	2-03B-37	003	AZ215	741			CLS 2” / 1/8” (T), 9/16” (C)				
DS	2-03B-39	003	AZ216	730			CLS 3-1/4” / .39” (T), 0” (C)				
DS	2-03A-445	003	AZ216	753			CLS 2-3/4” / 9/16” (T), 1/16” (C)				
DS	2-03A-449	003	AZ216	754			CLS 2-11/16” / 11/16” (T), 0” (C)				
Auxiliary Feedwater From the Motor Driven Auxiliary Feed Pump 2B-B to Steam Generator #4											
VS	03B-2AFW-V177	003	U-A14	753	N/A		CLS 1,247# / +3/8” / -1/16” (NOR), +3/8” / -1/16” (MAX)				
DS	03B-2AFW-R242	003	U-A14	745			CLS 2-11/16” / 1/16” (T), 3/8” (C)				
DS	03B-2AFW-R171E	003	U-A14	748			CLS 1-1/4” / 1/4” (T), 1/32” (C)				
DS	03B-2AFW-R171W	003	U-A14	748			CLS 1-1/4” / 1/4” (T), 1/32” (C)				

Attachment 21
(Page 16 of 37)

DYNAMIC SNUBBERS, VARIABLE SPRINGS AND CONSTANT SPRINGS 450° (445°-455°) PLATEAU DATA

Date _____

TYPE SUPT	SUPPORT IDENTIFIER	SYS	LOCATION	ELEV	SERIAL NO.	TEMP °F	SET POINT / MOVEMENT	SCALE READING	PERFORMER INIT/ DATE	VERIFIER INIT/ DATE	COMMENTS
VS	2-62A-240	062	AZ110	728	N/A		CLS 813# / +1/16” / -1/16” (NOR), +1/16” / -1/16” (MAX)				
DS	2-62A-247	062	AZ81	704			CLS 4-1/4” / 1/16” (T), 11/16” (C)				
DS	2-62A-250	062	AZ54	709			CLS 1-1/4” / .44” (T), .02” (C)				
VS	2-62A-252	062	AZ54	714	N/A		CLS 510# / +1/16” / -0” (NOR), +1/16” / 0” (MAX)				
DS	2-62A-254	062	AZ50	706			CLS 1-1/8” / 1/16” (T), 1/8” (C)				
DS	2-62A-256N	062	AZ51	704			CLS 2-1/2” / .01” (T), .1” (C)				
DS	2-62A-256S	062	AZ51	704			CLS 2-1/2” / .01” (T), .1” (C)				
DS	2-62A-256V	062	AZ57	704			CLS 2” / .15” (T), .01” (C)				
VS	2-62A-258	062	AZ48	713	N/A		CLS 90# / + 3/16” / -0” (NOR), +3/16” / -0” (MAX)				
DS	2-62A-262	062	AZ47	706			CLS 1-3/16” / 1/.8 (T), 1/4” (C)				
VS	2-62A-266	062	AZ46	714	N/A		CLS 60# / 1/64” (NOR), 1/64” (MAX)				
DS	2-62A-269	062	AZ46	706			CLS 2” / 1/16” (T), 1/4” (C)				
DS	2-62A-271E	062	AZ45	704			CLS 1-1/8” / 1/8” (T), 1/16” (C)				
DS	2-62A-271W	062	AZ45	704			CLS 1-1/8” / 1/8” (T), 1/16” (C)				
VS	2-62A-290	062	AZ215	705	N/A		CLS 1,114# / 1.07” (UP)				
DS	2-62A-291	062	AZ215	711			CLS 2-3/4” / 0” (T), 2-1/8” (C)				

Attachment 21
(Page 17 of 37)

DYNAMIC SNUBBERS, VARIABLE SPRINGS AND CONSTANT SPRINGS 450° (445°-455°) PLATEAU DATA

Date _____

TYPE SUPT	SUPPORT IDENTIFIER	SYS	LOCATION	ELEV	SERIAL NO.	TEMP °F	SET POINT / MOVEMENT	SCALE READING	PERFORMER INIT/ DATE	VERIFIER INIT/ DATE	COMMENTS
DS	2-62A-294	062	AZ215	727			CLS 2-1/16” / 1/2” (T), 5/8” (C)				
DS	2-62A-319	062	AZ128	716			CLS 1” / 1/16” (T), 1/16” (C)				
DS	2-62A-320	062	AZ107	723			CLS 1” / 11/16” (T), 0” (C)				
CS	2-62A-346	062	AZ103	732	N/A		CLS 515# / 2-3/8”(UP)				
DS	2-62A-357	062	AZ343	727			CLS 3/4” / 2-13/16” (T), 0” (C)				
DS	2-62A-358	062	AZ328	727			CLS 1/2” (+1/4, -0”) / 3-5/8” (T), 1/16” (C)				
DS	2-62A-360	062	AZ322	727			CLS 3-3/4” / 1/2” (T), 2-7/16” (C)				
DS	2-62A-362	062	AZ322	727			CLS 2.19” / 1/8” (T), 3/8” (C)				
DS	2-62A-363	062	AZ321	726			CLS 1” / 2-1/8” (T), 0” (C)				
DS	2-62A-366	062	AZ318	727			CLS 1-1/8” / 1-13/16” (T), 1/8” (C)				
DS	2-62A-369	062	AZ128	727			CLS 1-7/8” / 0” (T), 1/2” (C)				
DS	2-62A-371	062	AZ128	728			CLS 7/8” / 1/4” (T), 0” (C)				
CS	2-62A-375	062	AZ103	734	N/A		CLS 429# / 3/32” (DOWN)				
DS	2-62A-377	062	AZ95	730			CLS 2-3/4” / 1/8” (T), 1-7/16” (C)				
DS	2-62A-382	062	AZ48	727			CLS 1-1/4” / 1-9/16” (T), 1/8” (C)				
DS	2-62A-463	062	AZ225	723			CLS 1.81” / .01” (T), 1.32” (C)				
VS	2-62A-530	062	AZ45	705	N/A		CLS 568# / 0” / -.03” (NOR), +.02” / -.05” (MAX)				
DS	2-62A-531	062	AZ44	712			CLS 3-1/2” / 1/16” (T), 5/8” (C)				

Attachment 21
(Page 18 of 37)

DYNAMIC SNUBBERS, VARIABLE SPRINGS AND CONSTANT SPRINGS 450° (445°-455°) PLATEAU DATA

Date _____

TYPE SUPT	SUPPORT IDENTIFIER	SYS	LOCATION	ELEV	SERIAL NO.	TEMP °F	SET POINT / MOVEMENT	SCALE READING	PERFORMER INIT/ DATE	VERIFIER INIT/ DATE	COMMENTS
VS	2-62A-532	062	AZ52	706	N/A		CLS 460# / +1/16” / -1/16” (NOR), +1/16” / -1/16” (MAX)				
DS	2-62A-533	062	AZ50	706			CLS 5/8” / 3/16” (T), 1/16” (C)				
VS	2-62A-535	062	AZ48	705	N/A		CLS 589# / 1/8” (DOWN)				
DS	2-62A-536	062	AZ46	712			CLS 2-1/4” / 1/16” (T), 5/8” (C)				
DS	2-62A-557	062	AZ43	727			CLS 3-3/16” (+1/16”, -3/16) / 7/16” (T), 2-3/4” (C)				
DS	2-62A-559	062	AZ43	727			CLS 3” / 1/4” (T), 1-1/2” (C)				
DS	2-62A-561	062	AZ43	727			CLS 2” / 15/16” (T), 5/16” (C)				
VS	2-62A-562	062	AZ43	727	N/A		CLS 422# / 1/4” (UP)				
DS	2-62A-563	062	AZ43	727			CLS 1-1/2” / 13/16” (T), 0” (C)				
VS	2-62A-584	062	AZ178	730	N/A		CLS 35# / 3/8” (UP)				
DS	2-62A-589	062	AZ150	729			CLS 2-1/2” / .85” (T), .03” (C)				
VS	2-62A-621	062	AZ302	716	N/A		CLS 117# / +.02”/ -.39” (NOR) +.03”/ -.41” (MAX)				
DS	2-62A-624	062	AZ44	706			CLS 2-5/16” / 1/16” (T), 1/16" (C)				
DS	2-62A-625	062	AZ57	706			CLS 1-7/8” / 3/16” (T), 1/16” (C)				
DS	2-62A-630	062	AZ150	729			CLS 2” / 0” (T), 3/4” (C)				
VS	2-62A-637	062	AZ110	719	N/A		CLS 112# / +.09" / 0" (NOR), +.09" / 0" (MAX)				

Attachment 21
(Page 19 of 37)

DYNAMIC SNUBBERS, VARIABLE SPRINGS AND CONSTANT SPRINGS 450° (445°-455°) PLATEAU DATA

Date _____

TYPE SUPT	SUPPORT IDENTIFIER	SYS	LOCATION	ELEV	SERIAL NO.	TEMP °F	SET POINT / MOVEMENT	SCALE READING	PERFORMER INIT/ DATE	VERIFIER INIT/ DATE	COMMENTS
DS	2-62A-802	062	AZ200	719			CLS 2-1/4” / 1-1/8” (T), 0” (C)				
DS	2-62A-808	062	AZ210	726			CLS 31/8” / .42” (T), 3.11” (C)				
DS	2-62A-809	062	AZ210	725			CLS 3-1/4” / 1/16” (T), 23/16” (C)				
DS	2-62A-810	062	AZ208	725			CLS 3/4” / 2-3/4” (T), 0” (C)				
DS	2-68-365	062	AZ220	704			CLS 1-1/4” / 2-13/16” (T), 0” (C)				
DS	47A406-12-79N	062	AZ48	706			CLS 2” / 1/16” (T), 1/16” (C)				
DS	47A406-12-79S	062	AZ48	706			CLS 2” / 1/16” (T), 1/16” (C)				
DS	47A406-12-79W	062	AZ48	706			CLS 2” / 3/16” (T), 1/8” (C)				
DS	47A406-12-82	062	AZ43	705			CLS 2-1/8” / 1/16” (T), 3/16” (C)				
DS	2-47A406-12-89	062	AZ48	705			CLS 1” / .02” (T), .03” (C)				
DS	2-47A406-12-93N	062	AZ44	712			CLS 2-5/8” / 1/16” (T), 1/4” (C)				
DS	2-47A406-12-93S	062	AZ44	712			CLS 2-5/8” / 1/16” (T), 1/4” (C)				
DS	2-47A406-12-94E	062	AZ44	712			CLS 4-1/8” / 1/16” (T), -3/16” (C)				
DS	2-47A406-12-94W	062	AZ44	712			CLS 4-1/8” / 1/16” (T), -3/16” (C)				
DS	2-47A406-12-97T	062	AZ326	712			CLS 4-3/8” / 1/16” (T), 1-3/8” (C)				
DS	2-47A406-12-97B	062	AZ326	712			CLS 4-1/2” / 1/16” (T), 1-3/8” (C)				
DS	2-47A406-12-98N	062	AZ53	712			CLS 2-1/2” / 1/10” (T), 1-1/4” (C)				
DS	2-47A406-12-98S	062	AZ53	712			CLS 2-1/2” / 1/10” (T), 1-1/4” (C)				
DS	2-47A406-12-101	062	AZ44	712			CLS 2-7/16” / 1/16” (T), 13/16” (C)				

Attachment 21
(Page 20 of 37)

DYNAMIC SNUBBERS, VARIABLE SPRINGS AND CONSTANT SPRINGS 450° (445°-455°) PLATEAU DATA

Date _____

TYPE SUPT	SUPPORT IDENTIFIER	SYS	LOCATION	ELEV	SERIAL NO.	TEMP °F	SET POINT / MOVEMENT	SCALE READING	PERFORMER INIT/ DATE	VERIFIER INIT/ DATE	COMMENTS
DS	47A406-13-56	062	AZ216	726			CLS .9” / .74”(T), .02” (C)				
DS	2-47A406-13-106	062	AZ52	727			CLS 2-7/16” / 1/16” (T), 1/8” (C)				
DS	2-47A406-14-67	062	AZ123	720			CLS 2” / 1-1/16” (T), 1/16” (C)				
VS	2-47A406-14-81	062	AZ321	728	N/A		CLS 441# / + 1/4” / -1/16” (NOR), +5/8” / -1/2” (MAX)				
DS	2-47A406-14-84	062	AZ123	726	N/A		CLS 2-1/4” / 3/16” (T), 5/16” (C)				
DS	2-47A406-14-85	062	AZ122	725	N/A		CLS 2-1/4” / 7/8” (T), 0 (C)				
DS	2-47A406-14-86	062	AZ122	725	N/A		CLS 2-1/8” / 1/8” (T), 1/8” (C)				
DS	2-47A406-14-87	062	AZ185	730	N/A		CLS 2” / 1/8” (T), 1/16” (C)				
DS	47A465-3-52	062	AZ53	712			CLS 2-1/2” / 1/32” (T), 1/4” (C)				
DS	2-47A560-38-2	062	AZ220	704			CLS 2-1/8” / 1-7/16” (T), 1/16” (C)				

Attachment 21
(Page 21 of 37)

DYNAMIC SNUBBERS, VARIABLE SPRINGS AND CONSTANT SPRINGS 450° (445°-455°) PLATEAU DATA

Date _____

TYPE SUPT	SUPPORT IDENTIFIER	SYS	LOCATION	ELEV	SERIAL NO.	TEMP °F	SET POINT / MOVEMENT	SCALE READING	PERFORMER INIT/ DATE	VERIFIER INIT/ DATE	COMMENTS
DS	2-63-001	063	AZ42	725			CLS 3-1/2" / 1/16" (T), 15/16" (C)				
VS	2-63-002	063	AZ45	728	N/A		CLS 2,431# / +15/16" / -1/16" (NOR), +11/16" / -3/8" (MAX)				
DS	2-63-005	063	AZ40	728			CLS 2-3/16" / 3/16" (T), 1/16" (C)				
DS	2-63-008	063	AZ31	718			CLS 4-1/2" / 3/8" (T), 1/16" (C)				
DS	2-63-011	063	AZ40	726			CLS 1-1/8" / 1/16" (T), 1/8" (C)				
VS	2-63-013	063	AZ34	740	N/A		CLS 1,466# / +11/16" / -1/32" (NOR), +11/16" / -1/32" (MAX)				
DS	2-63-014	063	AZ34	738			CLS 2" / 11/16" (T), 1/32" (C)				
VS	2-63-016	063	AZ18	741	N/A		CLS 262# / +1-1/8" / -3/16" (NOR), +1-1/8" / -3/16" (MAX)				
DS	2-63-018	063	AZ21	738			CLS 2" / 1-1/8" (T), 1/16" (C)				
DS	2-63-019	063	AZ16	740			CLS 2-1/2" / 1/8" (T), 1-15/16" (C)				
VS	2-63-020	063	AZ12	740	N/A		CLS 1,375# / +1-9/16" / -1/4" (NOR), +1-7/8" / -1/2" (MAX)				
DS	2-63-022	063	AZ358	740			CLS 4" / 1/4" (T), 2-3/4" (C)				
DS	2-63-023	063	AZ342	736			CLS 1-1/4" / 3/8"(T), 1/16" (C)				
DS	2-63-024	063	AZ342	740			CLS 2-3/4" / 1/8" (T),15/16" (C)				
VS	2-63-026	063	AZ320	741	N/A		CLS 1,332# / +3/4" / 0" (NOR), +13/16" / -1/16" (MAX)				

Attachment 21
(Page 22 of 37)

DYNAMIC SNUBBERS, VARIABLE SPRINGS AND CONSTANT SPRINGS 450° (445°-455°) PLATEAU DATA

Date _____

TYPE SUPT	SUPPORT IDENTIFIER	SYS	LOCATION	ELEV	SERIAL NO.	TEMP °F	SET POINT / MOVEMENT	SCALE READING	PERFORMER INIT/ DATE	VERIFIER INIT/ DATE	COMMENTS
VS	2-63-028	063	AZ308	741	N/A		CLS 1,868# / 7/8" (UP) (NOR), 7/8"(UP) (MAX)				
DS	2-63-029	063	AZ308	735			CLS 1-1/4" / 7/8" (T), 0" (C)				
DS	2-63-030	063	AZ308	738			CLS 3" / 1/4" (T), 1/16" (C)				
DS	2-63-031	063	AZ300	735			CLS 1-1/2" / 7/16" (T), 1/16" (C)				
DS	2-63-032	063	AZ300	734			CLS 2" / 13/16" (T), 1/8" (C)				
DS	2-63-035	063	AZ35	728			CLS 3" / 0" (T), 1" (C)				
DS	2-63-038E	063	AZ35	731			CLS 2-3/4" / 1/4" (T), 1/16" (C)				
DS	2-63-038W	063	AZ35	731			CLS 3-1/4" / 1/4" (T), 1/16" (C)				
DS	2-63-042	063	AZ297	734			CLS 2-3/4" / 1/2" (T), 1/16 (C)				
DS	2-63-043	063	AZ297	734			CLS 2-3/8" / 1/8" (T), 0" (C)				
DS	2-63-055	063	AZ111	741			CLS 3-5/8" / 1/8" (T), 2-1/8" (C)				
DS	2-63-062	063	AZ215	741			CLS 3-1/2" / 1/8" (T), 1-1/2" (C)				
VS	2-63-063	063	AZ218	736	N/A		CLS 2,106# / +13/16" / 0" (NOR), +13/16" / -1/16" (MAX)				
DS	2-63-064	063	AZ218	734			CLS 2-1/4" / 0" (T), 3/4" (C)				
DS	2-63-069	063	AZ215	740			CLS 1-3/8" / 1-7/16" (T), 1/16" (C)				
VS	2-63-070	063	AZ225	729	N/A		CLS 3,860# / +5/16" (UP) / -0" (DN) (NOR), +5/16" (UP) / -0" (DN) (MAX)				

Attachment 21
(Page 23 of 37)

DYNAMIC SNUBBERS, VARIABLE SPRINGS AND CONSTANT SPRINGS 450° (445°-455°) PLATEAU DATA

Date _____

TYPE SUPT	SUPPORT IDENTIFIER	SYS	LOCATION	ELEV	SERIAL NO.	TEMP °F	SET POINT / MOVEMENT	SCALE READING	PERFORMER INIT/ DATE	VERIFIER INIT/ DATE	COMMENTS
DS	2-63-072	063	AZ218	725			CLS 2-1/2” / 1/16” (T), 1/8” (C)				
DS	2-63-078	063	AZ145	736			CLS 3-3/4” / 1/8”(T), 3/4” (C)				
VS	2-63-080	063	AZ145	729	N/A		CLS 1,520# / +1/32” / -1/2” (NOR), +1/32” / -1/2” (MAX)				
DS	2-63-095N	063	AZ215	727			CLS 1-3/4” / 0” (T), 5/8” (C)				
DS	2-63-095S	063	AZ215	727			CLS 2” / 1/8” (T), 1/16” (C)				
DS	2-63-156	063	AZ300	725			CLS 2” / 1/16” (T), 11/16” (C)				
DS	2-63-161	063	AZ300	723			CLS 1-15/16” / 1/16” (T), 5/16” (C)				
DS	2-63-163	063	AZ304	722			CLS 1-1/2” / 1/16”(T), 3/16” (C)				
DS	2-63-164	063	AZ302	722			CLS 2-1/4” / 1/2” (T), 1/8” (C)				
VS	2-63-165	063	AZ302	722	N/A		CLS 66# / +1/4” / 0” (NOR), +5/16” / -1/16” (MAX)				
DS	2-63-169	063	AZ295	732			CLS1-5/8” / 1/16” (T), 1/16” (C)				
DS	2-63-185	063	AZ42	729			CLS 2-1/2” / 1/16” (T), 1-1/8” (C)				
DS	2-63-285	063	AZ181	730			CLS 1-3/4” / 3/16” (T), 1/16” (C)				
VS	2-63-342	063	AZ188	731	N/A		CLS 2,356# / 3/8” (UP)				
DS	2-63-365	063	AZ37	727			CLS 2-7/8” / 1/16” (T), 3/4” (C)				
VS	2-63-367	063	AZ37	731	N/A		CLS 2,140# / +7/8” / 0” (NOR), +1-3/16” / -1/4” (MAX)				

Attachment 21
(Page 24 of 37)

DYNAMIC SNUBBERS, VARIABLE SPRINGS AND CONSTANT SPRINGS 450° (445°-455°) PLATEAU DATA

Date _____

TYPE SUPT	SUPPORT IDENTIFIER	SYS	LOCATION	ELEV	SERIAL NO.	TEMP °F	SET POINT / MOVEMENT	SCALE READING	PERFORMER INIT/ DATE	VERIFIER INIT/ DATE	COMMENTS
VS	2-63-451	063	AZ321	725	N/A		CLS 2,900 / +3/8” / -1/16” (NOR), +3/4” / -1/2” (MAX)				
DS	2-63-453	063	AZ324	724			CLS 2-7/8” / 1/16” (T), 3/8” (C)				
DS	2-63-458	063	AZ324	723			CLS 4-1/2” / 11/16” (T), 1/16” (C)				
DS	2-63-459	063	AZ324	718			CLS 2” / 0” (T), 7/8” (C)				
VS	2-63-466E	063	AZ324	730	N/A		CLS 148# / +1/4” / -1/16” (NOR), +1/4” / -1/16” (MAX)				
VS	2-63-466W	063	AZ324	730	N/A		CLS 160# / +1/4” / -1/16” (NOR), +1/4” / -1/16” (MAX)				
DS	2-63-520	063	AZ45	723			CLS 1-3/4” / 1-1/16” (T), 1/16” (C)				
DS	2-63-526	063	AZ45	725			CLS 3-1/16” / 5/8” (T), 1/8” (C)				
DS	2-63-528	063	AZ293	733			CLS 1” / 1/16” (T), 1/16” (C)				
DS	2-63-571	063	AZ150	729			CLS 7/8” / 9/16" (T), 1/16" (C)				
DS	2-63-573	063	AZ181	730			CLS 1-1/2” / 1/16” (T), 1/4” (C)				
DS	2-63-584	063	AZ39	732			CLS 1-5/16” / 1-1/2” (T), 1/16” (C)				
VS	2-63-588	063	AZ142	731	N/A		CLS 1,988# / -1/8” (EXT)				
DS	2-63-592	063	AZ344	741			CLS 1-1/2” / 2-5/16” (T), 1/2” (C)				

Attachment 21
(Page 25 of 37)

DYNAMIC SNUBBERS, VARIABLE SPRINGS AND CONSTANT SPRINGS 450° (445°-455°) PLATEAU DATA

Date _____

TYPE SUPT	SUPPORT IDENTIFIER	SYS	LOCATION	ELEV	SERIAL NO.	TEMP °F	SET POINT / MOVEMENT	SCALE READING	PERFORMER INIT/ DATE	VERIFIER INIT/ DATE	COMMENTS
DS	47A432-1-8T	063	U-A12	688			CLS 3-7/16” / 1/8” (T), 7/8” (C)				
DS	47A432-1-8B	063	U-A12	688			CLS 3-7/16” / 1/8” (T), 7/8” (C)				
DS	47A432-3-6	063	AZ37	728			CLS 2-3/4” / 1/8” (T), 3/8” (C)				
DS	47A432-3-8	063	AZ142	727			CLS 3” / 0” (T), 3/8” (C)				
DS	2-47A432-3-13	063	AZ35	737			CLS 2-1/2” / 3/4” (T), 1/16” (C)				
DS	2-47A432-3-14	063	AZ38	727			CLS 1-3/4” / 1/16” (T), 11/16” (C)				
DS	2-47A432-3-15	063	AZ142	728			CLS 2-1/4” / 3/4” (T), 1/16” (C)				
DS	2-47A432-3-16	063	AZ157	725			CLS 4” / 3/8” (T), 3/8” (C)				
DS	47A435-3-8	063	U-A13	706			CLS 1-1/8” / 1/4” (T), 1/16” (C)				
DS	2-47A435-3-18T	063	U-C13	719			CLS 3” / 3/16” (T), 3/8” (C)				
DS	2-47A435-3-18B	063	U-C13	719			CLS 3” / 3/16” (T), 3/8” (C)				
DS	2-47A435-12-6	063	AZ291	721			CLS 2” / 1/16” (T), 3/8” (C)				
DS	47A435-12-62	063	AZ324	731			CLS 5/8” / 5/16” (T), 1/16” (C)				
DS	47A435-12-89	063	AZ324	728			CLS 1-1/4” / 3/16” (T), 1/16” (C)				
DS	2-47A435-12-93	063	AZ300	723			CLS 5/8” / 1-5/16” (T), 1/16” (C)				
DS	47A435-13-60	063	AZ32	723			CLS 1” / 7/8” (T), 0” (C)				
VS	47A435-13-73	063	AZ347	740	N/A		CLS 1,125# / +11/16” / -3/16” (NOR), + 7/8” / -5/16” (MAX)				
DS	2-47A435-13-117	063	AZ45	721			CLS 1-3/4” / 1/16” (T), 1” (C)				

Attachment 21
(Page 26 of 37)

DYNAMIC SNUBBERS, VARIABLE SPRINGS AND CONSTANT SPRINGS 450° (445°-455°) PLATEAU DATA

Date _____

TYPE SUPT	SUPPORT IDENTIFIER	SYS	LOCATION	ELEV	SERIAL NO.	TEMP °F	SET POINT / MOVEMENT	SCALE READING	PERFORMER INIT/ DATE	VERIFIER INIT/ DATE	COMMENTS
DS	2-47A435-13-118	063	AZ45	718			CLS 2” / 3/16” (T),1/16” (C)				
VS	2-47A435-13-119	063	AZ45	718	N/A		CLS 91# / +1/16” / -1/16” (NOR), +1/4” / -1/4” (MAX)				
VS	47A435-14-61	063	AZ125	721	N/A		CLS 1,715# / +3/16” (UP) (NOR), 1/2” (UP) (MAX)				
DS	47A435-14-80N	063	AZ146	725			CLS 1-1/2" / 1/16" (T), 5/16" (C)				
DS	47A435-14-80S	063	AZ146	725			CLS 1-1/2" / 1/16" (T), 5/16" (C)				
VS	47A435-14-81	063	AZ145	730	N/A		CLS 175# / +.01” / -.34” (NOR), +.02” / -.40” (MAX)				
VS	47A435-14-84	063	AZ150	730	N/A		CLS 48# / +0” UP, 3/16” DOWN (NOR), +0” UP, -3/16” DOWN (MAX)				
DS	2-47A435-14-107	063	AZ143	727			CLS 1-1/4” / 1/8” (T), 3/8” (C)				
DS	2-47A435-14-109	063	AZ199	721			CLS 1-11/16” / 0” (T), 7/8” (C)				
VS	47A435-15-58	063	AZ228	720	N/A		CLS 154# / +.02” / -.01” (NOR), +.34” / -.32” (MAX)				
DS	47A435-15-70	063	AZ232	718			CLS 2-3/8”/ 3/8” (T), 1/16” (C)				
DS	47A435-15-79	063	AZ219	724			CLS 1-1/2” / 0” (T), 3/4” (C)				
DS	47A435-15-97	063	AZ218	723			CLS 3” / 1/16” (T), 11/16” (C)				
DS	47A435-16-17	063	AZ286	729			CLS 1-1/8” / 1/16” (T), 3/16” (C)				
DS	47A435-16-21E	063	AZ292	733			CLS 2-7/16” / 1/16” (T), 1/16” (C)				

Attachment 21
(Page 27 of 37)

DYNAMIC SNUBBERS, VARIABLE SPRINGS AND CONSTANT SPRINGS 450° (445°-455°) PLATEAU DATA

Date _____

TYPE SUPT	SUPPORT IDENTIFIER	SYS	LOCATION	ELEV	SERIAL NO.	TEMP °F	SET POINT / MOVEMENT	SCALE READING	PERFORMER INIT/ DATE	VERIFIER INIT/ DATE	COMMENTS
DS	47A435-16-21W	063	AZ292	733			CLS 3-1/8” / 1/16” (T), 1/16” (C)				
DS	47A435-16-31	063	AZ285	731			CLS 2 1/4” / 1/16” (T), 3/16” (C)				
DS	47A435-16-33N	063	AZ289	731			CLS 3” / 1/16” (T), 1/16” (C)				
DS	47A435-16-33E	063	AZ289	731			CLS 1” / 1/16” (T), 1/4” (C)				
DS	47A435-16-34N	063	AZ282	726			CLS 2-7/8” / 1/16” (T), 3/16” (C)				
DS	47A435-16-34S	063	AZ282	726			CLS 2” / 0” (T), 1/32” (C)				
DS	47A435-16-47	063	AZ289	733			CLS 2-3/4” / 1/16” (T), 3/16” (C)				
DS	47A435-16-50S	063	AZ298	724			CLS 2” / 1/16” (T), 5/16” (C)				
DS	47A435-16-50E	063	AZ298	724			CLS 2” / 1/8” (T), 3/8” (C)				
DS	47A435-16-51	063	AZ291	729			CLS 2” / 3/16” (T), 0” (C)				
DS	47A435-16-55E	063	AZ295	732			CLS 2-7/8” / 1/16” (T), 1/8” (C)				
DS	47A435-16-55S	063	AZ295	732			CLS 2” / 1/8” (T), 1/4” (C)				
DS	47A435-16-62N	063	AZ294	725			CLS 1-3/16” / 1/16” (T), 0” (C)				
DS	47A435-16-62S	063	AZ294	725			CLS 1-3/16” / 1/16” (T), 0” (C)				
DS	47A435-16-65	063	AZ296	719			CLS 2-5/8” / 0” (T), 3/8” (C)				
DS	47A435-16-66	063	AZ296	719			CLS 2” / 1/8” (T), 1/4” (C)				
DS	2-47A435-16-73	063	AZ284	724			CLS 1-15/16” / 1/8” (T), 1/16” (C)				
VS	2-47A435-16-75	063	AZ284	724	N/A		CLS 155# / -1/16” (NOR), -1/16” (MAX)				

Attachment 21
(Page 28 of 37)

DYNAMIC SNUBBERS, VARIABLE SPRINGS AND CONSTANT SPRINGS 450° (445°-455°) PLATEAU DATA

Date _____

TYPE SUPT	SUPPORT IDENTIFIER	SYS	LOCATION	ELEV	SERIAL NO.	TEMP °F	SET POINT / MOVEMENT	SCALE READING	PERFORMER INIT/ DATE	VERIFIER INIT/ DATE	COMMENTS
DS	2-47A435-16-76	063	AZ284	729			CLS 2” / 1/16” (T), 3/16” (C)				
DS	2-47A435-16-77	063	AZ285	729			CLS 2-3/16” / 1/16” (T), 3/8” (C)				
DS	2-47A435-16-78	063	AZ285	729			CLS 2” / 1/8” (T), 3/16” (C)				
VS	2-47A435-16-79	063	AZ298	731	N/A		CLS 210# / +5/16”, -1/16” (NOR) +3/8”, -1/16” (MAX)				
VS	47A437-1-25	063	T-A10	690	N/A		CLS 2,683# / +1/16” / 0” (NOR), +1/16”/ -1/16” (MAX)				
DS	2-47A437-1-62	063	U-A12	688			CLS 3-1/2” / 1/4” (T), 2-5/16” (C)				
DS	2-47A437-2-4	063	U-A11	681			CLS 2-7/8” / 5/16” (T), 1/16” (C)				
DS	47A437-2-22	063	T-A11	684			CLS 2” / 0” (T), 1/4” (C)				
DS	47A437-2-24	063	U-A11	686			CLS 1-1/2” / 3/16”(T), 1/16” (C)				
VS	47A437-2-28N	063	U-A11	676	N/A		CLS 7,141# / +.06” / -.31 (NOR), +.06” / -.31” (MAX)				
VS	47A437-2-28S	063	U-A11	676	N/A		CLS 7,141# / +.06” / -.31 (NOR), +.06” / -.31” (MAX)				
VS	47A437-2-29E	063	U-A10	681	N/A		CLS 1,341# / +1/16” / -0” (NOR), +1/16” / -0” (MAX)				
VS	47A437-2-29W	063	U-A10	681	N/A		CLS 1509# / +1/16” / -0” (NOR), +1/16” / -0” (MAX)				
DS	63-2SIS-V142N	063	V-A10	687	N/A		CLS 2-1/2” / 3/16” (T), 1/4” (C)				

Attachment 21
(Page 29 of 37)

DYNAMIC SNUBBERS, VARIABLE SPRINGS AND CONSTANT SPRINGS 450° (445°-455°) PLATEAU DATA

Date _____

TYPE SUPT	SUPPORT IDENTIFIER	SYS	LOCATION	ELEV	SERIAL NO.	TEMP °F	SET POINT / MOVEMENT	SCALE READING	PERFORMER INIT/ DATE	VERIFIER INIT/ DATE	COMMENTS
DS	63-2SIS-V142S	063	V-A10	687	N/A		CLS 2-1/2” / 3/16” (T), 1/4” (C)				
VS	63-2SIS-V143N	063	V-A11	690	N/A		CLS 978# / +1/4” / -0” (NOR), +1/8” / -3/16” (MAX)				
VS	63-2SIS-V143S	063	V-A11	690	N/A		CLS 1,775# / +1/4” / 0” (NOR), +1/8” / -3/16” (MAX)				
VS	63-2SIS-V145	063	V-A11	691	N/A		CLS 2,177# / +1/8” / -1/4” (NOR), +1/16” / -7/16” (MAX)				
DS	63-2SIS-R155	063	V-A12	688			CLS 3.4” / 0” (T), 13/16” (C)				
VS	63-2SIS-V166N	063	U-A10	689	N/A		CLS 773 / +.21” / -.05” (NOR), +.22” / -.06” (MAX)				
VS	63-2SIS-V166S	063	U-A10	689	N/A		CLS 773 / +.21” / -.05” (NOR), +.22” / -.06” (MAX)				
DS	63-2SIS-R168N	063	U-A10	689			CLS 2-5/8” / 1/32” (T), 5/16” (C)				
DS	63-2SIS-R168S	063	U-A10	689			CLS 2-5/8” / 1/32” (T), 5/16” (C)				
DS	63-2SIS-R170	063	U-A12	687			CLS 3-1/2” / 0” (T), 1-9/16” (C)				
DS	63-2SIS-R211	063	V-A12	688			CLS 2-1/2” / 9/16” (T), 0” (C)				
DS	63-2SIS-R214	063	V-A11	686			CLS 3” / .89” (T), 0” (C)				
DS	63-2SIS-R216	063	U-A11	684			CLS 2-3/4” / 0” (T), 1/8” (C)				
DS	63-2SIS-R240N	063	U-A12	686			CLS 1” / 13/16” (T), 0” (C)				
DS	63-2SIS-R240S	063	U-A12	686			CLS 2” / 13/16” (T), 0” (C)				

Attachment 21
(Page 30 of 37)

DYNAMIC SNUBBERS, VARIABLE SPRINGS AND CONSTANT SPRINGS 450° (445°-455°) PLATEAU DATA

Date _____

TYPE SUPT	SUPPORT IDENTIFIER	SYS	LOCATION	ELEV	SERIAL NO.	TEMP °F	SET POINT / MOVEMENT	SCALE READING	PERFORMER INIT/ DATE	VERIFIER INIT/ DATE	COMMENTS
DS	63-2SIS-R242	063	U-A12	686			CLS 2-5/8” / 11/16” (T), 0” (C)				
DS	63-2SIS-R245	063	T-A11	686			CLS 2-1/2” / 0” (T), 1/8” (C)				
DS	63-2SIS-R276	063	T-A11	689			CLS 2” / 5/16” (T), 0” (C)				

Attachment 21
(Page 31 of 37)

DYNAMIC SNUBBERS, VARIABLE SPRINGS AND CONSTANT SPRINGS 450° (445°-455°) PLATEAU DATA

Date _____

TYPE SUPT	SUPPORT IDENTIFIER	SYS	LOCATION	ELEV	SERIAL NO.	TEMP °F	SET POINT / MOVEMENT	SCALE READING	PERFORMER INIT/ DATE	VERIFIER INIT/ DATE	COMMENTS
VS	2-68-001	068	AZ147	724	N/A		CLS 5,695# / +3/8” / -0” (NOR), +5/8” / -1/4” (MAX)				
VS	2-68-005	068	AZ92	725	N/A		CLS 4,614 / +0” / -1-1/2” (NOR), +0” / -2-1/4” (MAX)				
CS	2-68-011N	068	AZ104	787	N/A		CLS 1.8 INC / +2.70” / -.11” (MAX)				
CS	2-68-011S	068	AZ104	787	N/A		CLS 1.8 INC / +2.70” / -.11” (MAX)				
DS	2-68-020	068	AZ104	733			CLS 2-11/16” / 5/8” (T), 1/16” (C)				
DS	2-68-021	068	AZ110	729			CLS 2-7/8” / 1/16” (T), 9/16” (C)				
DS	2-68-023E	068	AZ109	736			CLS 1-7/8” / 1/16” (T), 15/16” (C)				
DS	2-68-023W	068	AZ109	736			CLS 1-7/8” / 1/16” (T), 15/16” (C)				
DS	2-68-024	068	AZ108	736			CLS 2-1/8” / 1/16” (T), 7/8” (C)				
VS	2-68-025	068	AZ110	733	N/A		CLS 1,113# / +1/16” /-7/16” (NOR), +1/16 / -7/16” (MAX)				
VS	2-68-028	068	AZ104	754	N/A		CLS 758# / +.95” / -.05” (NOR), +1.29” / -.34” (MAX)				
DS	2-68-030	068	AZ110	732			CLS 3” / 1/4” (T), 3/8” (C)				
DS	2-68-031	068	AZ104	733			CLS 2-1/16” / 0” (T), 9/16” (C)				
DS	2-68-032	068	AZ98	736			CLS 1.81” / 0” (T), 1-3/16” (C)				
DS	2-68-033	068	AZ98	736			CLS 2-1/8” / 5/16” (T), 3/8” (C)				
DS	2-68-034	068	AZ98	733			CLS 1-1/8” / 1” (T), 1/16” (C)				
DS	2-68-036	068	AZ98	733			CLS 1-15/16” / 1/4” (T), 3/4” (C)				

Attachment 21
(Page 32 of 37)

DYNAMIC SNUBBERS, VARIABLE SPRINGS AND CONSTANT SPRINGS 450° (445°-455°) PLATEAU DATA

Date _____

TYPE SUPT	SUPPORT IDENTIFIER	SYS	LOCATION	ELEV	SERIAL NO.	TEMP °F	SET POINT / MOVEMENT	SCALE READING	PERFORMER INIT/ DATE	VERIFIER INIT/ DATE	COMMENTS
DS	2-68-042	068	AZ104	735			CLS 3-1/4” / 1/16” (T), 13/16” (C)				
VS	2-68-043	068	AZ108	735	N/A		CLS 678# / +.06” / -.32” (NOR), +.06” / -.32” (MAX)				
DS	2-68-044	068	AZ108	734			CLS 1-7/16” (+1/16”, -3/8”) / 5/8” (T), 1/16” (C)				
DS	2-68-050	068	AZ104	733			CLS 1-3/4” / 9/16”” (T), 1/8” (C)				
DS	2-68-053	068	AZ98	733			CLS 2-3/8” / 1/8” (T), 1-1/16” (C)				
DS	2-68-093	068	AZ100	784			CLS 3/4” / 4-5/8” (T), 1/8” (C)				
CS	2-68-094	068	AZ99	791	N/A		CLS 3/4” / 4-1/2” (UP)				
DS	2-68-096	068	AZ104	784			CLS 11/16” (± 1/8) / 3-13/16” (T), 1/8” (C)				
VS	2-68-334	068	AZ47	707	N/A		CLS 153# / +.01” / -.20” (NOR), +.11” / -.26” (MAX)				
DS	2-68-348	068	AZ142	706			CLS 162# . +.03” / -.63” (NOM), +.03” / -.75” (MAX)				
VS	2-68-379	068	AZ323	707	N/A		CLS 124# / 3/4” (DOWN)				
VS	2-68-382	068	AZ321	708	N/A		CLS 157# / .52” (DOWN (NOR), .78” (DOWN) (MAX)				
DS	2-68-404E	068	AZ82	754			CLS 5-3/8” / 1/16” (T), 4-7/8” (C)				
DS	2-68-404W	068	AZ82	754			CLS 5-3/8” / 1/16” (T), 4-7/8” (C)				
DS	2-68-406E	068	AZ87	747			CLS 3” / 1/4” (T), 1/4” (C)				
DS	2-68-406W	068	AZ87	747			CLS 3” / 1/4” (T), 1/4” (C)				

Attachment 21
(Page 33 of 37)

DYNAMIC SNUBBERS, VARIABLE SPRINGS AND CONSTANT SPRINGS 450° (445°-455°) PLATEAU DATA

Date _____

TYPE SUPT	SUPPORT IDENTIFIER	SYS	LOCATION	ELEV	SERIAL NO.	TEMP °F	SET POINT / MOVEMENT	SCALE READING	PERFORMER INIT/ DATE	VERIFIER INIT/ DATE	COMMENTS
DS	2-68-412N	068	AZ99	786			CLS 1-3/4” / 1/8” (T), 5/16” (C)				
DS	2-68-412S	068	AZ99	788			CLS 1-3/4” / 1/8” (T), 5/16” (C)				
DS	2-68-415N	068	AZ97	787			CLS 2” / 7/8” (T), 1/16” (C)				
DS	2-68-415S	068	AZ97	787			CLS 2” / 1-1/16” (T), 1/16” (C)				
DS	2-68-427	068	AZ97	778			CLS 2-3/4” / 1/8” (T), 3/8” (C)				
DS	2-68-429E	068	AZ104	761			CLS 2-9/16” / 1/4” (T), 9/16” (C)				
DS	2-68-429W	068	AZ104	761			CLS 2-9/16” / 1/4” (T), 9/16” (C)				
DS	2-47A465-1-108	068	AZ110	729			CLS 2-3/4” /1/16” (T), 1/2” (C)				
DS	47A465-2-23	068	AZ100	776			CLS 3-7/8” / 0” (T), 3-3/16” (C)				
DS	47A465-2-41	068	AZ104	775			CLS 1-1/2” / 1/16” (T), 1/4” (C)				
CS	47A465-2-42	068	AZ104	775	N/A		CLS 3/4” / 2.96” (UP)				
DS	47A465-2-46	068	AZ97	758			CLS 3” / 0” (T), 2-1/8” (C)				
VS	47A465-2-47	068	AZ100	758	N/A		CLS 130# / 2.10” (NOR), 2.12” (MAX)				
VS	2-47A465-2-81	068	AZ99	737	N/A		CLS 50# / +1/4” / -0” (NOR), +5/16” / -1/16” (MAX)				
DS	47A465-4-7E	068	AZ104	736			CLS 1-3/4 / 0” (T), 3/8” (C)				
DS	47A465-4-7W	068	AZ104	736			CLS 1-3/8 ” / 1/16” (T), 3/16” (C)				
DS	47A465-8-60	068	AZ335	742			CLS 2-1/2” / 1/16” (T), 7/16” (C)				
DS	47A465-8-61	068	AZ65	742			CLS 2-11/16” / 1/16” (T), 1-11/16” (C)				

Attachment 21
(Page 34 of 37)

DYNAMIC SNUBBERS, VARIABLE SPRINGS AND CONSTANT SPRINGS 450° (445°-455°) PLATEAU DATA

Date _____

TYPE SUPT	SUPPORT IDENTIFIER	SYS	LOCATION	ELEV	SERIAL NO.	TEMP °F	SET POINT / MOVEMENT	SCALE READING	PERFORMER INIT/ DATE	VERIFIER INIT/ DATE	COMMENTS
DS	47A465-8-63	068	AZ145	742			CLS 2-3/4” / 1/16” (T), 1-1/2” (C)				
VS	47A465-8-73	068	AZ40	752	N/A		CLS 144# / +2-1/6” / -1/16” (NOR), +2-7/16” / -7/16” (MAX)				
VS	2-47A465-8-97	068	AZ111	742	N/A		CLS 100 / +3/4” / -1/16” (NOR), +7/8” / -3/16” (MAX)				

Attachment 21
(Page 35 of 37)

DYNAMIC SNUBBERS, VARIABLE SPRINGS AND CONSTANT SPRINGS 450° (445°-455°) PLATEAU DATA

Date _____

TYPE SUPT	SUPPORT IDENTIFIER	SYS	LOCATION	ELEV	SERIAL NO.	TEMP °F	SET POINT / MOVEMENT	SCALE READING	PERFORMER INIT/ DATE	VERIFIER INIT/ DATE	COMMENTS
DS	2-74-008	074	AZ354	707			CLS 4-1/4” / 7/16” (T), 1-1/16” (C)				
DS	2-74-010	074	AZ354	707			CLS 3” / 7/16” (T), 1/16” (C)				
DS	2-74-011	074	AZ348	707			CLS 4” / .06” (T), 1.64” (C)				
VS	2-74-012	074	AZ347	707	N/A		CLS 2,340# / +.03” / -.66”(NOR), +.17” / -.83” (MAX)				
DS	2-74-015	074	AZ0	724			CLS 1-3/4” / .55” (T), .02” (C)				
DS	2-74-017	074	AZ0	722			CLS 1” / 3/16” (T), 0” (C)				
VS	2-74-022	074	AZ354	716	N/A		CLS 10,515# / +1/16 / -3/4” (NOR), +1/16” / -3/4” (MAX)				
DS	47A432-2-2	063	V-A11	718			CLS 3” / 0” (T), 13/16” (C)				
DS	47A432-3-4	074	AZ349	707			CLS 3-3/4” / 7/16” (T), 1/16” (C)				
VS	2-47A432-3-17	074	AZ354	707	N/A		CLS 3,482# / +1/16” / -3/8” (NOR), +1/16” / -3/8” (MAX)				
DS	2-47A432-6-17	063	V-A11	693			CLS 2-5/8” / 1/16” (T), 3/16” (C)				
DS	74-2RHR-R096	074	V-A11	688			CLS 3” / 1/16” (T), 1” (C)				
DS	74-2RHR-R014N	074	W-A10	732			CLS 1” / 0” (T), 1/4” (C)				
DS	74-2RHR-R014S	074	W-A10	732			CLS 1” / 0” (T), 1/4” (C)				
VS	74-2RHR-V015N	074	W-A10	733	N/A		CLS 661# / +1/4”, -1/16” (NOR), +1/4” / -1/16” (MAX)				

Attachment 21
(Page 36 of 37)

DYNAMIC SNUBBERS, VARIABLE SPRINGS AND CONSTANT SPRINGS 450° (445°-455°) PLATEAU DATA

Date _____

TYPE SUPT	SUPPORT IDENTIFIER	SYS	LOCATION	ELEV	SERIAL NO.	TEMP °F	SET POINT / MOVEMENT	SCALE READING	PERFORMER INIT/ DATE	VERIFIER INIT/ DATE	COMMENTS
VS	74-2RHR-V015S	074	W-A10	733	N/A		CLS 661# / +1/4”, -1/16” (NOR), +1/4” / -1/16” (MAX)				
DS	74-2RHR-R028	074	V-A11	732			CLS 4-1/16” / 1/16” (T), 1/16” (C)				
VS	74-2RHR-V121	074	W-A10	719	N/A		CLS 711# / +1/16”, -0” (NOR), +1/16”, -0” (MAX)				
DS	74-2RHR-R216	074	W-A11	728			CLS 2” / 1/2” (T), 1/16” (C)				
DS	74-2RHR-R220	074	W-A11	729			CLS 3” / 1/16” (T), 1/8” (C)				
DS	74-2RHR-R058	074	V-A11	689			CLS 2-1/2” / 1/16” (T), 1” (C)				
VS	74-2RHR-V002	074	V-A10	729	N/A		CLS 1088# / +.31”, -.09” (NOR), +.50” / -.25” (MAX)				
DS	74-2RHR-R003E	074	V-A10	727			CLS 2” / 1/32” (T), 9/16” (C)				
DS	74-2RHR-R003W	074	V-A10	727			CLS 1-1/2” / 1/32” (T), 9/16” (C)				
DS	74-2RHR-V006	074	V-A10	721			CLS 2-1/4” / 1/4” (T), (0”)				
VS	74-2RHR-V011	074	V-A10	730	N/A		CLS 1624# / +7/16”, -1/8” (NOR), +5/8” / -5/16” (MAX)				
DS	74-2RHR-R230	074	W-A11	729			CLS 2-1/4” / 1/16” (T), 1/2” (C)				
DS	74-2RHR-R232	074	W-A11	729			CLS 3” / 0” (T), 7/16” (C)				
DS	74-2RHR-R037	074	W-A9	730			CLS 3” / 3/8” (T), 1/16” (C)				
VS	74-2RHR-V038	074	W-A9	730	N/A		CLS 2472# / +7/16”, -1/16” (NOR), +7/16” / -1/16” (MAX)				

Attachment 21
(Page 37 of 37)

DYNAMIC SNUBBERS, VARIABLE SPRINGS AND CONSTANT SPRINGS 450° (445°-455°) PLATEAU DATA

Date _____

TYPE SUPT	SUPPORT IDENTIFIER	SYS	LOCATION	ELEV	SERIAL NO.	TEMP °F	SET POINT / MOVEMENT	SCALE READING	PERFORMER INIT/ DATE	VERIFIER INIT/ DATE	COMMENTS
VS	74-2RHR-V041	074	V-A9	734	N/A		CLS 1509# / +9/16”, -1/16” (NOR), +11/16” / -1/16” (MAX)				
VS	63-2SIS-V134	063	V-A11	678	N/A		CLS 4,360# / +1/8” / 0” (NOR), +1/16” / -1/4” (MAX)				
VS	63-2SIS-V136	063	V-A11	676	N/A		CLS 2,082# / -5/32” (NOR), +1/32, -3/16” (MAX)				
VS	63-2SIS-V139NW	063	V-A10	677	N/A		CLS 263# / +0” / -.13” (NOR), +0” / -.14” (MAX)				
VS	63-2SIS-V139SE	063	V-A10	677	N/A		CLS 331# / +0” / -.13” (NOR), +0” / -.14” (MAX)				
VS	63-2SIS-V158	063	U-A11	678	N/A		CLS 6,135 / +1/16” / 0” (NOR), +1/8” / -1/8” (MAX)				
VS	63-2SIS-V163N	063	U-A10	677	N/A		CLS 1,850# / -1/16” (NOR), +0” / -1/8” (MAX)				
VS	63-2SIS-V163S	063	U-A10	677	N/A		CLS 1,244# / -1/16” (NOR), +0” / -1/8” (MAX)				
VS	63-2SIS-V179	063	V-A11	697	N/A		CLS 2,519# / +1/4” / -1/16” (NOR), +5/16” / -5/32” (MAX)				
VS	63-2SIS-V180	063	V-A11	723	N/A		CLS 4,306# / +1/8” / 0” (NOR), +3/16” / -3/16” (MAX)				

Attachment 22
(Page 1 of 37)

DYNAMIC SNUBBERS, VARIABLE SPRINGS AND CONSTANT SPRINGS 557° (553°-560°) PLATEAU DATA

Date _____

COLD LOAD SETTING (CLS) INCREMENT (INC)

TYPE SUPT	SUPPORT IDENTIFIER	SYS	LOCATION	ELEV.	SERIAL NO.	TEMP °F	SET POINT / MOVEMENT	SCALE READING	PERFORMER INIT/ DATE	VERIFIER INIT/ DATE	COMMENTS
DS	2-01A-301	001	AZ4	773			CLS 3”/ 1-13/16” (T), 0” (C)				
CS	2-01A-302N	001	AZ5	767	N/A		CLS 8.75 INC / +2.35, - 0 INC				
CS	2-01A-302S	001	AZ5	767	N/A		CLS 8.75 INC / +2.35, - 0 INC				
DS	2-01A-303N	001	AZ4	761			CLS 3” / .011” (T), 2.365” (C)				
DS	2-01A-303S	001	AZ4	761			CLS 5-1/2” / .011” (T), 2.365” (C)				
DS	2-01A-304E	001	SOUTH VLV RM	733			CLS 1-1/2” / 11/16” (T), 13/16” (C)				
DS	2-01A-304W	001	SOUTH VLV RM	733			CLS 1-1/2” / 11/16” (T), 13/16” (C)				
VS	2-01A-305	001	AZ4	737	N/A		CLS 13,973# / 1.94” UP (NOR), 2.09” UP (MAX)				
DS	2-01A-307N	001	AZ5	703			CLS 3-5/8” / 3/8” (T), 0” (C)				
DS	2-01A-307S	001	AZ5	703			CLS 3-3/8” / 3/8” (T), 0” (C)				
DS	2-01A-308	001	SOUTH VLV RM	737			CLS 3” / .22” (T), .28” (C)				
VS	2-01A-309	001	SOUTH VLV RM	740	N/A		CLS 27,083# / +.005” / -.17” (NOR), +.23” / -.18” (MAX)				
DS	2-01A-312	001	SOUTH VLV RM	742			CLS 2-1/2” / 0” (T), 3/8” (C)				
DS	2-01A-313	001	J-R6 S VLV RM				CLS 3-1/8” / 15/16” (T), 1/8” (C)				
DS	2-01A-317	001	SOUTH VLV RM	769			CLS 2-1/2” / 7/8” (T), 1/8” (C)				
DS	2-01A-340	001	AZ160	771			CLS 3-3/8” / 1/16” (T), 11/16” (C)				
CS	2-01A-342N	001	AZ176	767	N/A		CLS 7.5 INC / +1.83” / -.08”				

Attachment 22
(Page 2 of 37)

DYNAMIC SNUBBERS, VARIABLE SPRINGS AND CONSTANT SPRINGS 557° (553°-560°) PLATEAU DATA

Date _____

TYPE SUPT	SUPPORT IDENTIFIER	SYS	LOCATION	ELEV.	SERIAL NO.	TEMP °F	SET POINT / MOVEMENT	SCALE READING	PERFORMER INIT/ DATE	VERIFIER INIT/ DATE	COMMENTS
CS	2-01A-342S	001	AZ176	767	N/A		CLS 7.5 INC / +1.83” / -.08”				
DS	2-01A-343N	001	AZ175	761			CLS 3-1/2” / 4.03” (T), 1.61” (C)				
DS	2-01A-343S	001	AZ175	761			CLS 3-1/2” / 4.03” (T), 1.61” (C)				
VS	2-01A-344	001	AZ171	744	N/A		CLS 13,438# / +0” / -1/8” (NOR), +0” / -1/8” (MAX)				
DS	2-01A-348	001	NORTH VLV RM	737			CLS 3.35” / .03” (T), .73” (C)				
DS	2-01A-349	001	NORTH VLV RM	741			CLS 1” / .11” (T), .005” (C)				
DS	2-01A-350	001	NORTH VLV RM	755			CLS 3” / 1.12” (T), .05” (C)				
DS	2-01A-355	001	NORTH VLV RM	769			CLS 2-1/2” / .81” (T), .05” (C)				
DS	2-01A-380	001	AZ196	770			CLS 3-3/4” / 1/16” (T), 3/4” (C)				
DS	2-01A-381	001	AZ183	722			CLS 2-1/2” / 15/16” (T), 1/16” (C)				
CS	2-01A-382N	001	AZ182	770	N/A		CLS 7.5 INC / +1.93” / -.06”				
CS	2-01A-382S	001	AZ182	770	N/A		CLS 7.5 INC / +1.93” / -.06”				
DS	2-01A-383N	001	AZ183	759			CLS 3-1/2” / .03” (T),1.42” (C)				
DS	2-01A-383S	001	AZ183	759			CLS 2-1/2” / .03” (T), 1.42” (C)				
VS	2-01A-384E	001	AZ184	738	N/A		CLS 7,179# / +1/4” / -1/16” (NOR), +3/8” / -1/16” (MAX)				
VS	2-01A-384W	001	AZ184	738	N/A		CLS 7,179# / +1/4” / -1/16” (NOR), +3/8” / -1/16” (MAX)				
VS	2-01A-386	001	NORTH VLV RM	737	N/A		CLS 21,001 / +.04” / -.82” (NOR), +1.5” / -.82” (MAX)				

Attachment 22
(Page 3 of 37)

DYNAMIC SNUBBERS, VARIABLE SPRINGS AND CONSTANT SPRINGS 557° (553°-560°) PLATEAU DATA

Date _____

TYPE SUPT	SUPPORT IDENTIFIER	SYS	LOCATION	ELEV.	SERIAL NO.	TEMP °F	SET POINT / MOVEMENT	SCALE READING	PERFORMER INIT/ DATE	VERIFIER INIT/ DATE	COMMENTS
DS	2-01A-387	001	NORTH VLV RM	737			CLS 3” / .06” (T), 1.33” (C)				
DS	2-01A-389N	001	NORTH VLV RM	734			CLS 3.69” / .66” (T), 1.11” (C)				
DS	2-01A-389S	001	NORTH VLV RM	734			CLS 3.69” / .66” (T), 1.11” (C)				
VS	2-01A-389N	001	NORTH VLV RM	737	N/A		CLS 17,572# / +.03” / -.61” (NOR), +1.12” / -.61” (MAX)				
VS	2-01A-389S	001	NORTH VLV RM	737	N/A		CLS 12,131# / +.03” / -.61” (NOR), +1.12” / -.61” (MAX)				
DS	2-01A-391	001	NORTH VLV RM	741			CLS 2” / 7/32” (T), 1/32” (C)				
DS	2-01A-392	001	NORTH VLV RM	756			CLS 3-3/4” / 1-5/8” (T), 1/16” (C)				
DS	2-01A-397	001	NORTH VLV RM	769			CLS 2-1/2” / .08” (T), 1.81” (C)				
CS	2-01A-422N	001	AZ357	767	N/A		CLS 9 INC / +1.86” / -.05”				
CS	2-01A-422S	001	AZ357	767	N/A		CLS 9 INC / +1.86” / -.05”				
DS	2-01A-423N	001	AZ357	760			CLS 3-3/4” / 1/16” (T), 1-1/2” (C)				
DS	2-01A-423S	001	AZ357	760			CLS 3-3/4” / 1/16” (T), 1-1/2” (C)				
DS	2-01A-424	001	AZ357	745			CLS 3” / 13/16” (T), 1/16” (C)				
VS	2-01A-425E	001	AZ356	737	N/A		CLS 6,685# / +.15” (NOR), +.38” / -.07” (MAX)				
VS	2-01A-425W	001	AZ356	737	N/A		CLS 6,685# / +.15” (NOR), +.38” / -.07” (MAX)				
VS	2-01A-427	001	SOUTH VLV RM	753	N/A		CLS 17,875# / +.04” / -.79” (NOR), +.85” / -.17” (MAX)				

Attachment 22
(Page 4 of 37)

DYNAMIC SNUBBERS, VARIABLE SPRINGS AND CONSTANT SPRINGS 557° (553°-560°) PLATEAU DATA

Date _____

TYPE SUPT	SUPPORT IDENTIFIER	SYS	LOCATION	ELEV.	SERIAL NO.	TEMP °F	SET POINT / MOVEMENT	SCALE READING	PERFORMER INIT/ DATE	VERIFIER INIT/ DATE	COMMENTS
DS	2-01A-428	001	SOUTH VLV RM	737			CLS 3-1/8” / 7/16” (T), 0” (C)				
DS	2-01A-429N	001	SOUTH VLV RM	732			CLS 3-3/4” / 1/16” (T), 3/16” (C)				
DS	2-01A-429S	001	SOUTH VLV RM	732			CLS 3-3/4” / 1/16” (T), 3/16” (C)				
VS	2-01A-431	001	SOUTH VLV RM	737	N/A		CLS 23,297# / +1/32” / -3/8” (NOR), +1/32” / -3/8” (MAX)				
DS	2-01A-435	001	SOUTH VLV RM	755			CLS 3-7/16" / .06" (T), 1.28" (C)				
DS	2-01A-439	001	SOUTH VLV RM	769			CLS 2-1/2" / 1/16" (T), 1-7/16" (C)				
DS	47A400-16	001	T-T16	737			CLS 11.5” / 0” (T), 11” (C)				
DS	47A400-17	001	N-T16	732			CLS 3” / 8-1/2” (T), 0” (C)				
DS	47A400-18	001	K-T14	722			CLS 3” / 5/16” (T), 0” (C)				
DS	47A400-19	001	K-T13	722			CLS 5” / 0” (T), 3-5/8” (C)				
DS	47A400-20	001	J-T13	718			CLS 4” / 0” (T), 1-5/8” (C)				
DS	47A400-21	001	K-T13	722			CLS 1” / 3-9/16” (T), 0” (C)				
DS	47A400-22T	001	K-T13	722			CLS 4-1/4” / 0” (T), 2” (C)				
DS	47A400-22B	001	K-T13	722			CLS 3-1/4” / 0” (T), 2” (C)				
DS	47A400-23	001	N-T16	732			CLS 1-5/8” / 8-13/16” (T), 0” (C)				
DS	47A400-24T	001	T-T16	737			CLS 1-1/8” / 10-1/4” (T), 0” (C)				
DS	47A400-24B	001	T-T16	737			CLS 1-1/8” / 10-1/4” (T), 0” (C)				
DS	47A400-25T	001	M-T15	723			CLS 9/16” / 4-13/16” (T), 0” (C)				
DS	47A400-25B	001	M-T15	723			CLS 9/16” / 4-13/16” (T), 0” (C)				

Attachment 22
(Page 5 of 37)

DYNAMIC SNUBBERS, VARIABLE SPRINGS AND CONSTANT SPRINGS 557° (553°-560°) PLATEAU DATA

Date _____

TYPE SUPT	SUPPORT IDENTIFIER	SYS	LOCATION	ELEV.	SERIAL NO.	TEMP °F	SET POINT / MOVEMENT	SCALE READING	PERFORMER INIT/ DATE	VERIFIER INIT/ DATE	COMMENTS
DS	47A400-26	001	J-T12	718			CLS 3-1/2” / 0” (T), 1-1/2” (C)				
DS	47A400-27	001	M-T15	722			CLS 1/2” / 4-13/16” (T), 0” (C)				
DS	47A400-28	001	J-T12	726			CLS 2-1/2”” / 15/16” (T), 0” (C)				
DS	47A400-29	001	J-T12	726			CLS 2” / 1” (T), 0” (C)				
DS	47A400-30T	001	J-T10	718			CLS 4” / 0” (T), 1-13/16” (C)				
DS	47A400-30B	001	J-T10	718			CLS 4” / 0” (T), 1-13/16” (C)				
CS	01A-2MS-V007N	001	M-T15	727	N/A		CLS 6,238# / 1-3/8” (DOWN)				
CS	01A-2MS-V007S	001	M-T15	727	N/A		CLS 6,238# / 1-3/8” (DOWN)				
CS	01A-2MS-V008N	001	M-T14	727	N/A		CLS 6,960# / 1-7/8” (DOWN)				
CS	01A-2MS-V008S	001	M-T14	727	N/A		CLS 6,960# / 1-7/8” (DOWN)				
CS	01A-2MS-V009N	001	M-T13	727	N/A		CLS 7,242# / 2-1/2” (DOWN)				
CS	01A-2MS-V009S	001	M-T13	727	N/A		CLS 7,242# / 2-1/2” (DOWN)				
CS	01A-2MS-V010E	001	K-T12	727	N/A		CLS 7,135# / 2-5/8” (DOWN)				
CS	01A-2MS-V010W	001	K-T12	727	N/A		CLS 7,135# / 2-5/8” (DOWN)				
VS	01A-2MS-V011E	001	K-T12	725	N/A		CLS 4,615# / 2-9/16” (DOWN)				
VS	01A-2MS-V011W	001	K-T12	725	N/A		CLS 4,615# / 2-9/16” (DOWN)				
VS	01A-2MS-V012E	001	J-T12	725	N/A		CLS 4,781# / 2-1/2” (DOWN)				
VS	01A-2MS-V012W	001	J-T12	725	N/A		CLS 4,781# / 2-1/2” (DOWN)				
CS	01A-2MS-V027E	001	M-T16	727	N/A		CLS 6,580# / 1-1/16” (DOWN)				
CS	01A-2MS-V027W	001	M-T16	727	N/A		CLS 6,580# / 1-1/16” (DOWN)				

Attachment 22
(Page 6 of 37)

DYNAMIC SNUBBERS, VARIABLE SPRINGS AND CONSTANT SPRINGS 557° (553°-560°) PLATEAU DATA

Date _____

TYPE SUPT	SUPPORT IDENTIFIER	SYS	LOCATION	ELEV.	SERIAL NO.	TEMP °F	SET POINT / MOVEMENT	SCALE READING	PERFORMER INIT/ DATE	VERIFIER INIT/ DATE	COMMENTS
CS	01A-2MS-V028N	001	K-T15	727	N/A		CLS 6,271# / 1-13/16” (DOWN)				
CS	01A-2MS-V028S	001	K-T15	727	N/A		CLS 6,271# / 1-13/16” (DOWN)				
CS	01A-2MS-V029N	001	K-T14	727	N/A		CLS 5,073# / 2-9/16” (DOWN)				
CS	01A-2MS-V029S	001	K-T14	727	N/A		CLS 5,073# / 2-9/16” (DOWN)				
CS	01A-2MS-V030N	001	K-T13	727	N/A		CLS 4,894# / 2-15/16” (DOWN)				
CS	01A-2MS-V030S	001	K-T13	727	N/A		CLS 4,894# / 2-15/16” (DOWN)				
CS	01A-2MS-V031E	001	K-T13	727	N/A		CLS 6,730# / 3” (DOWN)				
CS	01A-2MS-V031W	001	K-T13	727	N/A		CLS 6,730# / 3” (DOWN)				
VS	01A-2MS-V032E	001	J-T13	725	N/A		CLS 7,171 / 2-5/8” (DOWN)				
VS	01A-2MS-V032W	001	J-T13	725	N/A		CLS 7,171 / 2-5/8” (DOWN)				
CS	01A-2MS-V047E	001	M-T16	727	N/A		CLS 7,785# / 1-3/16” (DOWN)				
CS	01A-2MS-V047W	001	M-T16	727	N/A		CLS 7,785# / 1-3/16” (DOWN)				
CS	01A-2MS-V048N	001	K-T15	727	N/A		CLS 7,400# / 2-1/16” (DOWN)				
CS	01A-2MS-V048S	001	K-T15	727	N/A		CLS 7,400# / 2-1/16” (DOWN)				
CS	01A-2MS-V049N	001	K-T14	727	N/A		CLS 4,309# / 2-1/16” (DOWN)				
CS	01A-2MS-V049S	001	K-T14	727	N/A		CLS 4,309# / 2-1/16” (DOWN)				
CS	01A-2MS-V050N	001	K-T14	727	N/A		CLS 3,710# / 3” (DOWN)				
CS	01A-2MS-V050S	001	K-T14	727	N/A		CLS 3,710# / 3” (DOWN)				
CS	01A-2MS-V051E	001	K-T13	727	N/A		CLS 6,181# / 3-1/16” (DOWN)				
CS	01A-2MS-V051W	001	K-T13	727	N/A		CLS 6,181# / 3-1/16” (DOWN)				

Attachment 22
(Page 7 of 37)

DYNAMIC SNUBBERS, VARIABLE SPRINGS AND CONSTANT SPRINGS 557° (553°-560°) PLATEAU DATA

Date _____

TYPE SUPT	SUPPORT IDENTIFIER	SYS	LOCATION	ELEV.	SERIAL NO.	TEMP °F	SET POINT / MOVEMENT	SCALE READING	PERFORMER INIT/ DATE	VERIFIER INIT/ DATE	COMMENTS
VS	01A-2MS-V052E	001	J-T13	725	N/A		CLS 5,396# / 2-5/8” (DOWN)				
VS	01A-2MS-V052W	001	J-T13	725	N/A		CLS 5,396# / 2-5/8” (DOWN)				
CS	01A-2MS-V059N	001	M-T15	727	N/A		CLS 6,363# / 1-1/8” (DOWN)				
CS	01A-2MS-V059S	001	M-T15	727	N/A		CLS 6,363# / 1-1/8” (DOWN)				
CS	01A-2MS-V060N	001	M-T14	727	N/A		CLS 6,775# / 1-3/4” (DOWN)				
CS	01A-2MS-V060S	001	M-T14	727	N/A		CLS 6,775# / 1-3/4” (DOWN)				
CS	01A-2MS-V061N	001	M-T12	727	N/A		CLS 8,158# / 2-3/16” (DOWN)				
CS	01A-2MS-V061S	001	M-T12	727	N/A		CLS 8,158# / 2-3/16” (DOWN)				
CS	01A-2MS-V062E	001	M-T12	727	N/A		CLS 9,549# / 2-7/16” (DOWN)				
CS	01A-2MS-V062N	001	M-T12	727	N/A		CLS 9,549# / 2-7/16” (DOWN)				
VS	01A-2MS-V063E	001	K-T12	725	N/A		CLS 5,731# / 2-1/2” (DOWN)				
VS	01A-2MS-V063W	001	K-T12	725	N/A		CLS 5,731# / 2-1/2” (DOWN)				
VS	01A-2MS-V064E	001	J-T12	725	N/A		CLS 2,676# / 2-3/8” (DOWN)				
VS	01A-2MS-V064W	001	J-T12	725	N/A		CLS 2,676# / 2-3/8” (DOWN)				
VS	01A-2MS-V065	001	J-T13	727	N/A		CLS 22,564# / 2-5/8” (DOWN)				
VS	01A-2MS-V066	001	J-T12	727	N/A		CLS 28,401# / 2-5/8” (DOWN)				
VS	01A-2MS-V067	001	J-T11	727	N/A		CLS 9,925# / 2-1/4” (DOWN)				
VS	01A-2MS-V068	001	J-T10	727	N/A		CLS 8,977# / 2” (DOWN)				
VS	01A-2MS-V069	001	H-T10	727	N/A		CLS 9,104# / 1-1/2” (DOWN)				
VS	01A-2MS-V070	001	H-T10	753	N/A		CLS 11,165# / 1” (DOWN)				

Attachment 22
(Page 8 of 37)

DYNAMIC SNUBBERS, VARIABLE SPRINGS AND CONSTANT SPRINGS 557° (553°-560°) PLATEAU DATA

Date _____

TYPE SUPT	SUPPORT IDENTIFIER	SYS	LOCATION	ELEV.	SERIAL NO.	TEMP °F	SET POINT / MOVEMENT	SCALE READING	PERFORMER INIT/ DATE	VERIFIER INIT/ DATE	COMMENTS
VS	01A-2MS-V071	001	H-T10	753	N/A		CLS 16,404# / 1/2” (DOWN)				
VS	01A-2MS-V072	001	G-T10	753	N/A		CLS 8,860 / 3/32” (UP)				
VS	01A-2MS-V073	001	F-T10	753	N/A		CLS 8,336# / 1/2” (UP)				
VS	01A-2MS-V074	001	F-T10	753	N/A		CLS 2,317# / 3/4” (UP)				
VS	01A-2MS-V075	001	F-T10	721	N/A		CLS 1,660# / 7/16” (UP)				
VS	01A-2MS-V075	001	F-T10	721	N/A		CLS 1,660# / 7/16” (UP)				
VS	01A-2MS-V076	001	F-T11	725	N/A		CLS 1,792# / 3/16” (UP)				
VS	01A-2MS-V077	001	F-T10	720	N/A		CLS 1,609# / 5/16” (UP)				
VS	01A-2MS-V077	001	F-T10	720	N/A		CLS 1,609# / 5/16” (UP)				
VS	01A-2MS-V078	001	F-T11	725	N/A		CLS 1,880# / 5/16” (UP)				
VS	01A-2MS-V079	001	G-T10	721	N/A		CLS 1,565# / 1/4” (UP)				
VS	01A-2MS-V079	001	G-T10	721	N/A		CLS 1,565# / 1/4” (UP)				
VS	01A-2MS-V080	001	G-T11	725	N/A		CLS 1,805# / 3/16” (UP)				
VS	01A-2MS-V081	001	G-T10	721	N/A		CLS 1,500# / 1/8” (UP)				
VS	01A-2MS-V081	001	G-T10	721	N/A		CLS 1,500# / 1/8” (UP)				
VS	01A-2MS-V082	001	G-T11	725	N/A		CLS 1,810# / 3/16” (UP)				
VS	01A-2MS-V083	001	G-T10	721	N/A		CLS 1,426# / 1/4” (DN)				
VS	01A-2MS-V083	001	G-T10	721	N/A		CLS 1,426# / 1/4” (DN)				
VS	01A-2MS-V084	001	G-T11	724	N/A		CLS 1,719# / 3/16” (UP)				
VS	01A-2MS-V085	001	G-T10	721	N/A		CLS 1,290# / 3/8” (DN)				

Attachment 22
(Page 9 of 37)

DYNAMIC SNUBBERS, VARIABLE SPRINGS AND CONSTANT SPRINGS 557° (553°-560°) PLATEAU DATA

Date _____

TYPE SUPT	SUPPORT IDENTIFIER	SYS	LOCATION	ELEV.	SERIAL NO.	TEMP °F	SET POINT / MOVEMENT	SCALE READING	PERFORMER INIT/ DATE	VERIFIER INIT/ DATE	COMMENTS
VS	01A-2MS-V085	001	G-T10	721	N/A		CLS 1,290# / 3/8” (DN)				
VS	01A-2MS-V086	001	G-T11	727	N/A		CLS 1,928# / 3/16” (UP)				
VS	01A-2MS-V087	001	G-T10	721	N/A		CLS 1,290# / 3/8” (DN)				
VS	01A-2MS-V087	001	G-T10	721	N/A		CLS 1,290# / 3/8” (DN)				
VS	01A-2MS-V088	001	G-T11	727	N/A		CLS 1,933# / 3/16” (UP)				
VS	01A-2MS-V089	001	G-T10	721	N/A		CLS 1,261# / 3/8” (DN)				
VS	01A-2MS-V089	001	G-T10	721	N/A		CLS 1,261# / 3/8” (DN)				
VS	01A-2MS-V090	001	G-T11	724	N/A		CLS 1,733# / 3/16” (UP)				
VS	01A-2MS-V091	001	H-T10	721	N/A		CLS 1,263# / 1/2” (DN)				
VS	01A-2MS-V091	001	H-T10	721	N/A		CLS 1,263# / 1/2” (DN)				
VS	01A-2MS-V092	001	H-T11	724	N/A		CLS 1,710# / 3/16” (UP)				
VS	01A-2MS-V093	001	H-T10	721	N/A		CLS 1,081# / 5/8” (DN)				
VS	01A-2MS-V093	001	H-T10	721	N/A		CLS 1,081# / 5/8” (DN)				
VS	01A-2MS-V094	001	H-T11	727	N/A		CLS 2,135# / 3/16” (UP)				
VS	01A-2MS-V095	001	H-T10	721	N/A		CLS 1,196# / 3/4” (DN)				
VS	01A-2MS-V095	001	H-T10	721	N/A		CLS 1,196# / 3/4” (DN)				
VS	01A-2MS-V096	001	H-T11	727	N/A		CLS 2,140# / 3/16” (DN)				
VS	01A-2MS-V097	001	H-T10	720	N/A		CLS 1,187# / 7/8” (DN)				
VS	01A-2MS-V097	001	H-T10	720	N/A		CLS 1,187# / 7/8” (DN)				
VS	01A-2MS-V098	001	H-T11	724	N/A		CLS 1,717# / 3/16” (UP)				

Attachment 22
(Page 10 of 37)

DYNAMIC SNUBBERS, VARIABLE SPRINGS AND CONSTANT SPRINGS 557° (553°-560°) PLATEAU DATA

Date _____

TYPE SUPT	SUPPORT IDENTIFIER	SYS	LOCATION	ELEV	SERIAL NO.	TEMP °F	SET POINT / MOVEMENT	SCALE READING	PERFORMER INIT/ DATE	VERIFIER INIT/ DATE	COMMENTS
(STEP 6.9[2.2]) During Performance of 2-PTI-003A-03											
Main Feedwater Line to Steam Generator #1											
DS	2-03A-205	003	U-A15	731			CLS 2-5/16” / 1-7/16” (T), 0 (C)				
Main Feedwater Line to Steam Generator #2											
DS	2-03A-244	003	AZ172	731			CLS 3-1/2” / 1-1/4” (T), 1/4” (C)				
DS	2-03A-248	003	AZ165	731			CLS 4” / 1/16” (T), 1-1/8” (C)				
Main Feedwater Line to Steam Generator #3											
DS	2-03A-285	003	CRANE WALL AZ188	731			CLS 2-1/2” / 2” (T), 0” (C)				
DS	2-03A-289	003	AZ185	731			CLS 5” / 0 (T), 3-15/16” (C)				
Main Feedwater Line to Steam Generator #4											
DS	2-03A-320	003	CRANE WALL AZ352	729			CLS 3” / 0” (T), 2-3/16” (C)				
DS	2-03A-321	003	CRANE WALL AZ352	731			CLS 3” / 7/8” (T), 1/16” (C)				
DS	2-03A-323	003	U-A14	731			CLS 2-3/16” / 1-5/8” (T), 0” (C)				
DS	2-03A-328	003	U-A15	731			CLS 3” / 3” (T), 0” (C)				

Attachment 22
(Page 11 of 37)

DYNAMIC SNUBBERS, VARIABLE SPRINGS AND CONSTANT SPRINGS 557° (553°-560°) PLATEAU DATA

Date _____

TYPE SUPT	SUPPORT IDENTIFIER	SYS	LOCATION	ELEV	SERIAL NO.	TEMP °F	SET POINT / MOVEMENT	SCALE READING	PERFORMER INIT/ DATE	VERIFIER INIT/ DATE	COMMENTS
(STEP 6.9[2.3]) During Performance of 2-PTI-003A-03											
Main Feedwater Bypass Line to Steam Generator #1											
DS	2-03A-369	003	AZ35	759			CLS 3-1/8” / 0” (T), 1-1/16” (C)				
DS	2-03A-370	003	AZ35	759			CLS 3.075” / . 72” (T), 1.149” (C)				
DS	2-03A-374E	003	S VLV RM U-6	730			CLS 1-11/16” / .63” (T), .04” (C)				
DS	2-03A-374W	003	S VLV RM U-6	730			CLS 1-11/16” / .63” (T), .04” (C)				
DS	2-03A-377	003	S VLV RM U-A15	730			CLS 2-1/4” / .03” (T), .57” (C)				
VS	2-03A-377	003	S VLV RM U-A15	730	N/A		CLS 2,431 / +.04” / -.55” (NOR), +.11” / .62” (MAX)				
VS	2-03A-378	003	AZ35	759	N/A		CLS 1-11/16”” / .632” (T), .04” (C)				
Main Feedwater Bypass Line to Steam Generator #2											
VS	2-03A-408	003	AZ160	759	N/A		CLS 913# / 1” (UP)				
DS	2-03A-411	003	AZ120	759			CLS 3-7/16” / 0” (T), 13/16” (C)				
DS	2-03A-423	003	N VLV RM X-6	735			CLS 3-1/4” / .05” (T), .81” (C)				
DS	2-03A-426	003	N VLV RM A-8	730			CLS 3” ±1/4” / .08” (T), .16” (C)				
DS	47A401-8-20T	003	AZ163	758			CLS 2” / 1/16” (T), 9/16” (C)				
DS	47A401-8-20B	003	AZ163	758			CLS 2” / 1/16” (T), 9/16” (C)				

Attachment 22
(Page 12 of 37)

DYNAMIC SNUBBERS, VARIABLE SPRINGS AND CONSTANT SPRINGS 557° (553°-560°) PLATEAU DATA

Date _____

TYPE SUPT	SUPPORT IDENTIFIER	SYS	LOCATION	ELEV	SERIAL NO.	TEMP °F	SET POINT / MOVEMENT	SCALE READING	PERFORMER INIT/ DATE	VERIFIER INIT/ DATE	COMMENTS
(STEP 6.9[2.3]) During Performance of 2-PTI-003A-03											
Main Feedwater Bypass Line to Steam Generator #3											
DS	2-03A-455	003	AZ199	759			CLS 3-1/2” / 0” (T), 1-3/16” (C)				
DS	2-03A-468	003	AZ182	730			CLS 2-1/2” / 11/16” (T), 0” (C)				
VS	2-47A401-8-28	003	AZ210	759	N/A		CLS 988# / +1-5/16” / 0” (NOR), 1-15/16” / -5/8” (MAX)				
DS	2-47A401-8-29T	003	AZ210	759			CLS 2-1/2” / 1-1/16” (T), 1/16” (C)				
DS	2-47A401-8-29B	003	AZ210	759			CLS 2-1/2” / 1-1/16” (T), 1/16” (C)				
Main Feedwater Bypass Line to Steam Generator #4											
DS	2-03A-480	003	AZ350	761			CLS 4-1/4” / 1/8” (T), 1-9/16” (C)				
VS	2-03A-481	003	AZ350	759	N/A		CLS 397# / +1” / -1/16” (NOR), +1” / -1/16” (MAX)				
DS	2-03A-482T	003	AZ350	759			CLS 2-1/4” / 9/16” (T), 0” (C)				
DS	2-03A-482B	003	AZ350	759			CLS 2-1/4” / 9/16” (T), 0” (C)				
DS	2-03A-483	003	AZ280	759			CLS 3-5/8” / 1/16” (T), 1-1/8” (C)				
DS	2-03A-485	003	AZ350	759			CLS 2-1/2” / .16” (T), .59” (C)				
DS	2-03A-497	003	AZ6	730			CLS 3-1/8” / 1/4” (T), 1/32” (C)				
DS	2-03A-503	003	AZ18	739			CLS 2-1/2” / 1/8” (T), 1/16” (C)				
DS	47A401-8-21E	003	AZ351	739			CLS 2-11/16” / 5/16” (T), 11/16” (C)				
DS	47A401-8-21W	003	AZ351	739			CLS 2-11/16” / 5/16” (T), 11/16” (C)				
DS	2-47A427-3-57T	003	AZ331	759			CLS 1-7/8” / 0” (T), 5/8” (C)				
DS	2-47A427-3-57B	003	AZ331	759			CLS 1-7/8” / 0” (T), 5/8” (C)				

Attachment 22
(Page 13 of 37)

DYNAMIC SNUBBERS, VARIABLE SPRINGS AND CONSTANT SPRINGS 557° (553°-560°) PLATEAU DATA

Date _____

TYPE SUPT	SUPPORT IDENTIFIER	SYS	LOCATION	ELEV	SERIAL NO.	TEMP °F	SET POINT / MOVEMENT	SCALE READING	PERFORMER INIT/ DATE	VERIFIER INIT/ DATE	COMMENTS
(STEP 6.9[2.4]) During Performance of 2-PTI-003A-03											
Main Feedwater Warm Up Line for Steam Generator #1											
DS	2-03A-527	003	S VLV RM A6-M	730			CLS 7/16” / 1-5/16”” (T), -1/16” (C)				
Main Feedwater Warm Up Line for Steam Generator #3											
DS	2-03A-563	003	N VLV RM 6-A	730			CLS 4-5/8” / 1/8” (T), 4-3/16” (C)				
Main Feedwater Warm Up Line for Steam Generator #4											
DS	2-03A-582	003	S VLV RM AZ350	730			CLS 5-1/8” / 0” (T), 4-1/16” (C)				
DS	2-03A-584	003	S VLV RM 6-M	730			CLS 3” / .06” (T), 1.99” (C)				
DS	2-47A401-9-15	003	S VLV RM AZ350	730			CLS 3” / 1/16” (T), 1-13/16” (C)				

Attachment 22
(Page 14 of 37)

DYNAMIC SNUBBERS, VARIABLE SPRINGS AND CONSTANT SPRINGS 557° (553°-560°) PLATEAU DATA

Date _____

TYPE SUPT	SUPPORT IDENTIFIER	SYS	LOCATION	ELEV	SERIAL NO.	TEMP °F	SET POINT / MOVEMENT	SCALE READING	PERFORMER INIT/ DATE	VERIFIER INIT/ DATE	COMMENTS
(STEP 6.9[2.5]) During Performance of 2-PTI-003B-05 Section 6.10 (TD) and Section 6.14 (MD)											
Auxiliary Feedwater From the Motor Driven Auxiliary Feed Pump 2A-A to Steam Generator #1											
DS	03B-2AFW-R155	003	S VLV RM U-6	746			CLS 1-1/2” / 3/8” (T), 1-7/16” (C)				
Auxiliary Feedwater From the Motor Driven Auxiliary Feed Pump 2A-A to Steam Generator #2											
VS	03B-2AFW-V178N	003	AZ301	750	N/A		CLS 124# / +3/8” / -1/8” (NOR), +13/16” / -9/16” (MAX)				
VS	03B-2AFW-V178S	003	AZ301	750	N/A		CLS 71# / +3/8” / -1/8” (NOR), +13/16” / -9/16” (MAX)				
VS	2-03B-80	003	AZ301	744	N/A		CLS 282# / 1/4” (UP)				
DS	2-03B-71T	003	AZ143	740			CLS 1-1/2” / .47” (T), .69 (C)				
DS	2-03B-71B	003	AZ143	740			CLS 1-1/2” / .47” (T), .69 (C)				
DS	2-03B-82	003	AZ143	727			CLS 2-1/2” / 0” (T), 1/4” (C)				
VS	2-03B-82	003	AZ143	727	N/A		CLS 612# / +0” / -1/4” (NOR), +0” / -1/4” (MAX)				
DS	2-03A-400	003	AZ144	744			CLS 2” / .67”(T), .0” (C)				
DS	2-03A-401	003	AZ143	744			CLS 2” / .85” (T), 0” (C)				
DS	2-03A-402	003	AZ143	753			CLS 3” / 0” (T), .20” (C)				
DS	2-03A-404	003	AZ144	753			CLS 4-1/2” / 0” (T), .88” (C)				
DS	2-03A-415	003	AZ144	752			CLS 3” / .73” (T), 0” (C)				

Attachment 22
(Page 15 of 37)

DYNAMIC SNUBBERS, VARIABLE SPRINGS AND CONSTANT SPRINGS 557° (553°-560°) PLATEAU DATA

Date _____

TYPE SUPT	SUPPORT IDENTIFIER	SYS	LOCATION	ELEV	SERIAL NO.	TEMP °F	SET POINT / MOVEMENT	SCALE READING	PERFORMER INIT/ DATE	VERIFIER INIT/ DATE	COMMENTS
(STEP 6.9[2.5]) During Performance of 2-PTI-003B-05 Section 6.10 (TD) and Section 6.14 (MD)											
Auxiliary Feedwater From the Motor Driven Auxiliary Feed Pump 2B-B to Steam Generator #3											
DS	2-03B-35	003	AZ301	743			CLS 2” / 5/8” (T), 1/8” (C)				
VS	47A427-6-31	003	AZ301	743	N/A		CLS 343# / +5/8” / -1/8” (NOR), +5/8” / -1/16” (MAX)				
VS	47A427-6-32	003	AZ216	730	N/A		CLS 895# / +1/8” / -9/16” (NOR), +1/16” / -9/16” (MAX)				
DS	2-03B-37	003	AZ215	741			CLS 2” / 1/8” (T), 9/16” (C)				
DS	2-03B-39	003	AZ216	730			CLS 3-1/4” / .39” (T), 0” (C)				
DS	2-03A-445	003	AZ216	753			CLS 2-3/4” / 9/16” (T), 1/16” (C)				
DS	2-03A-449	003	AZ216	754			CLS 2-11/16” / 11/16” (T), 0” (C)				
Auxiliary Feedwater From the Motor Driven Auxiliary Feed Pump 2B-B to Steam Generator #4											
VS	03B-2AFW-V177	003	U-A14	753	N/A		CLS 1,247# / +3/8” / -1/16” (NOR), +3/8” / -1/16” (MAX)				
DS	03B-2AFW-R242	003	U-A14	745			CLS 2-11/16” / 1/16” (T), 3/8” (C)				
DS	03B-2AFW-R171E	003	U-A14	748			CLS 1-1/4” / 1/4” (T), 1/32” (C)				
DS	03B-2AFW-R171W	003	U-A14	748			CLS 1-1/4” / 1/4” (T), 1/32” (C)				

Attachment 22
(Page 16 of 37)

DYNAMIC SNUBBERS, VARIABLE SPRINGS AND CONSTANT SPRINGS 557° (553°-560°) PLATEAU DATA

Date _____

TYPE SUPT	SUPPORT IDENTIFIER	SYS	LOCATION	ELEV	SERIAL NO.	TEMP °F	SET POINT / MOVEMENT	SCALE READING	PERFORMER INIT/ DATE	VERIFIER INIT/ DATE	COMMENTS
VS	2-62A-240	062	AZ110	728	N/A		CLS 813# / +1/16” / -1/16” (NOR), +1/16” / -1/16” (MAX)				
DS	2-62A-247	062	AZ81	704			CLS 4-1/4” / 1/16” (T), 11/16” (C)				
DS	2-62A-250	062	AZ54	709			CLS 1-1/4” / .44” (T), .02” (C)				
VS	2-62A-252	062	AZ54	714	N/A		CLS 510# / +1/6” / 0” (NOR), +1/16” / 0” (MAX)				
DS	2-62A-254	062	AZ50	706			CLS 1-1/8” / 1/16” (T), 1/8” (C)				
DS	2-62A-256N	062	AZ51	704			CLS 2-1/2” / .01” (T), .1” (C)				
DS	2-62A-256S	062	AZ51	704			CLS 2-1/2” / .01” (T), .1” (C)				
DS	2-62A-256V	062	AZ57	704			CLS 2” / .15” (T), .01” (C)				
VS	2-62A-258	062	AZ48	713	N/A		CLS 90# / + 3/16” / -0” (NOR), +3/16” / -0” (MAX)				
DS	2-62A-262	062	AZ47	706			CLS 13/16” / 1/8 (T), 1/4” (C)				
VS	2-62A-266	062	AZ46	714	N/A		CLS 60# / 1/64” (NOR), 1/64” (MAX)				
DS	2-62A-269	062	AZ46	706			CLS 1-1/8” / 1/16” (T), 1/4” (C)				
DS	2-62A-271E	062	AZ45	704			CLS 1-1/8” / 1/8” (T), 1/16” (C)				
DS	2-62A-271W	062	AZ45	704			CLS 1-1/8” / 1/8” (T), 1/16” (C)				
VS	2-62A-290	062	AZ215	705	N/A		CLS 1,114# / 1.07” (UP)				
DS	2-62A-291	062	AZ215	711			CLS 2-3/4” / 0” (T), 2-1/8” (C)				
DS	2-62A-294	062	AZ215	727			CLS 2-1/6” / 1/2” (T), 5/8” (C)				

Attachment 22
(Page 17 of 37)

DYNAMIC SNUBBERS, VARIABLE SPRINGS AND CONSTANT SPRINGS 557° (553°-560°) PLATEAU DATA

Date _____

TYPE SUPT	SUPPORT IDENTIFIER	SYS	LOCATION	ELEV	SERIAL NO.	TEMP °F	SET POINT / MOVEMENT	SCALE READING	PERFORMER INIT/ DATE	VERIFIER INIT/ DATE	COMMENTS
DS	2-62A-319	062	AZ128	716			CLS 1” / 1/16” (T), 1/16” (C)				
DS	2-62A-320	062	AZ107	723			CLS 1” / 11/16” (T), 0” (C)				
CS	2-62A-346	062	AZ103	732	N/A		CLS 515# / 2-3/8”(UP)				
DS	2-62A-357	062	AZ343	727			CLS 3/4” / 2-13/16” (T), 0” (C)				
DS	2-62A-358	062	AZ328	727			CLS 1/2” (+1/4, -0”) / 3-5/8” (T), 1/16” (C)				
DS	2-62A-360	062	AZ322	727			CLS 3-3/4” / 1/2” (T), 2-7/16” (C)				
DS	2-62A-362	062	AZ322	727			CLS 2.19” / 1/8” (T), 3/8” (C)				
DS	2-62A-363	062	AZ321	726			CLS 1” / 2-1/8” (T), 0” (C)				
DS	2-62A-366	062	AZ318	727			CLS 1-1/8” / 1-13/16” (T), 1/8” (C)				
DS	2-62A-369	062	AZ128	727			CLS 1-7/8” / 0” (T), 1/2” (C)				
DS	2-62A-371	062	AZ128	728			CLS 7/8” / 1/4” (T), 0” (C)				
CS	2-62A-375	062	AZ103	734	N/A		CLS 429# / 3/32” (DOWN)				
DS	2-62A-377	062	AZ95	730			CLS 2-3/4” / 1/8” (T), 1-7/16” (C)				
DS	2-62A-382	062	AZ48	727			CLS 1-1/4” / 1-9/16” (T), 1/8” (C)				
DS	2-62A-463	062	AZ225	723			CLS 1.81” / .01” (T), 1.32” (C)				
VS	2-62A-530	062	AZ45	705	N/A		CLS 568# / +0” / -.03” (NOR), +.02” / -.05” (MAX)				
DS	2-62A-531	062	AZ44	712			CLS 3-1/2” / 1/16” (T), 5/8” (C)				
VS	2-62A-532	062	AZ52	706	N/A		CLS 460# / +1/16” / -1/16” (NOR), +1/16” / -1/16” (MAX)				

Attachment 22
(Page 18 of 37)

DYNAMIC SNUBBERS, VARIABLE SPRINGS AND CONSTANT SPRINGS 557° (553°-560°) PLATEAU DATA

Date _____

TYPE SUPT	SUPPORT IDENTIFIER	SYS	LOCATION	ELEV	SERIAL NO.	TEMP °F	SET POINT / MOVEMENT	SCALE READING	PERFORMER INIT/ DATE	VERIFIER INIT/ DATE	COMMENTS
DS	2-62A-533	062	AZ50	706			CLS 5/8” / 3/16” (T), 1/16” (C)				
VS	2-62A-535	062	AZ48	705	N/A		CLS 589# / 1/8” (DOWN)				
DS	2-62A-536	062	AZ46	712			CLS 2-1/4” / 1/16” (T), 5/8” (C)				
DS	2-62A-557	062	AZ43	727			CLS 3-3/16” (+1/16”, -3/16”) / 7/16” (T), 2-3/4” (C)				
DS	2-62A-559	062	AZ43	727			CLS 3” / 1/4” (T), 1-1/2” (C)				
DS	2-62A-561	062	AZ43	727			CLS 2” / 15/16” (T), 5/16” (C)				
VS	2-62A-562	062	AZ43	727	N/A		CLS 422# / 1/4” (UP)				
DS	2-62A-563	062	AZ43	727			CLS 1-1/2” / 13/16” (T), 0” (C)				
VS	2-62A-584	062	AZ178	730	N/A		CLS 35# / 3/8” (UP)				
DS	2-62A-589	062	AZ150	729			CLS 2-1/2” / .85” (T), .03” (C)				
VS	2-62A-621	062	AZ302	716	N/A		CLS 117# / +.02”/ -.39” (NOR) +.03”/ -.41” (MAX)				
DS	2-62A-624	062	AZ44	706			CLS 2-5/8” / 1/16” (T), 1/16" (C)				
DS	2-62A-625	062	AZ57	706			CLS 1-7/8” / 3/16” (T), 1/16” (C)				
DS	2-62A-630	062	AZ150	729			CLS 2” / 0” (T), 3/4” (C)				
VS	2-62A-637	062	AZ110	719	N/A		CLS 112# / +.09" / 0" (NOR), +.09" / 0" (MAX)				
DS	2-62A-802	062	AZ200	719			CLS 2-1/4” / 1-1/8” (T), 0” (C)				
DS	2-62A-808	062	AZ210	726			CLS 3-1/8” / 1/16” (T), 2-3/16” (C)				
DS	2-62A-809	062	AZ210	725			CLS 3-1/4” / .02” (T), 2.07” (C)				

Attachment 22
(Page 19 of 37)

DYNAMIC SNUBBERS, VARIABLE SPRINGS AND CONSTANT SPRINGS 557° (553°-560°) PLATEAU DATA

Date _____

TYPE SUPT	SUPPORT IDENTIFIER	SYS	LOCATION	ELEV	SERIAL NO.	TEMP °F	SET POINT / MOVEMENT	SCALE READING	PERFORMER INIT/ DATE	VERIFIER INIT/ DATE	COMMENTS
DS	2-62A-810	062	AZ208	725			CLS 3/4” / 2-3/4” (T), 0” (C)				
DS	2-68-365	062	AZ220	704			CLS 1-1/4” / 2-13/16” (T), 0” (C)				
DS	47A406-12-79N	062	AZ48	706			CLS 2” / 1/16” (T), 1/16” (C)				
DS	47A406-12-79S	062	AZ48	706			CLS 2” / 1/16” (T), 1/16” (C)				
DS	47A406-12-79W	062	AZ48	706			CLS 2” / 3/16” (T), 1/8” (C)				
DS	47A406-12-82	062	AZ43	705			CLS 2-1/8” / 1/16” (T), 3/16” (C)				
DS	2-47A406-12-89	062	AZ48	705			CLS 1” / .02” (T), .03” (C)				
DS	2-47A406-12-93N	062	AZ44	712			CLS 2-5/8” / 1/16” (T), 1/4” (C)				
DS	2-47A406-12-93S	062	AZ44	712			CLS 2-5/8” / 1/16” (T), 1/4” (C)				
DS	2-47A406-12-94E	062	AZ44	712			CLS 4-1/8” / 1/16” (T), -3/16” (C)				
DS	2-47A406-12-94W	062	AZ44	712			CLS 4-1/8” / 1/16” (T), -3/16” (C)				
DS	2-47A406-12-97T	062	AZ326	712			CLS 4-3/8” / 1/16” (T), 1-3/8” (C)				
DS	2-47A406-12-97B	062	AZ326	712			CLS 4-1/2” / 1/16” (T), 1-3/8” (C)				
DS	2-47A406-12-98N	062	AZ53	712			CLS 2-1/2” / 1/10” (T), 1-1/4” (C)				
DS	2-47A406-12-98S	062	AZ53	712			CLS 2-1/2” / 1/10” (T), 1-1/4” (C)				
DS	2-47A406-12-101	062	AZ44	712			CLS 2-7/16” / 1/16” (T), 13/16” (C)				
DS	47A406-13-56	062	AZ216	726			CLS .9” / .74”(T), .02” (C)				
DS	2-47A406-13-106	062	AZ52	727			CLS 2-7/16” / 1/16” (T), 1/8” (C)				
DS	2-47A406-14-67	062	AZ123	720			CLS 2” / 1-1/16” (T), 1/16” (C)				

Attachment 22
(Page 20 of 37)

DYNAMIC SNUBBERS, VARIABLE SPRINGS AND CONSTANT SPRINGS 557° (553°-560°) PLATEAU DATA

Date _____

TYPE SUPT	SUPPORT IDENTIFIER	SYS	LOCATION	ELEV	SERIAL NO.	TEMP °F	SET POINT / MOVEMENT	SCALE READING	PERFORMER INIT/ DATE	VERIFIER INIT/ DATE	COMMENTS
VS	2-47A406-14-81	062	AZ321	728	N/A		CLS 441# / + 1/4” / -1/16” (NOR), +5/8” / -1/2” (MAX)				
DS	2-47A406-14-84	062	AZ123	726	N/A		CLS 2-1/4” / 3/16” (T), 5/16” (C)				
DS	2-47A406-14-85	062	AZ122	725	N/A		CLS 2-1/4” / 7/8” (T), 0 (C)				
DS	2-47A406-14-86	062	AZ122	725	N/A		CLS 2-1/8” / 1/8” (T), 1/8” (C)				
DS	2-47A406-14-87	062	AZ185	730	N/A		CLS 2” / 1/8” (T), 1/16” (C)				
DS	47A465-3-52	062	AZ53	712			CLS 2-1/2” / 1/32” (T), 1/4” (C)				
DS	2-47A560-38-2	062	AZ220	704			CLS 2-1/8” / 1-7/16” (T), 1/16” (C)				

Attachment 22
(Page 21 of 37)

DYNAMIC SNUBBERS, VARIABLE SPRINGS AND CONSTANT SPRINGS 557° (553°-560°) PLATEAU DATA

Date _____

TYPE SUPT	SUPPORT IDENTIFIER	SYS	LOCATION	ELEV	SERIAL NO.	TEMP °F	SET POINT / MOVEMENT	SCALE READING	PERFORMER INIT/ DATE	VERIFIER INIT/ DATE	COMMENTS
DS	2-63-001	063	AZ42	725			CLS 3-1/2” / 1/16” (T), 15/16” (C)				
VS	2-63-002	063	AZ45	728	N/A		CLS 2,431# / +15/16” / -1/16” (NOR), +11/16” / -3/8” (MAX)				
DS	2-63-005	063	AZ40	728			CLS 2-3/16” / 3/16” (T), 1/16” (C)				
DS	2-63-008	063	AZ31	718			CLS 4-1/2” / 3/8” (T), 1/16” (C)				
DS	2-63-011	063	AZ40	726			CLS 1-1/8” / 1/16” (T), 1/8” (C)				
VS	2-63-013	063	AZ34	740	N/A		CLS 1,466# / +11/16” / -1/32” (NOR), +11/16” / -1/32” (MAX)				
DS	2-63-014	063	AZ34	738			CLS 2” / 11/16” (T), 1/32” (C)				
VS	2-63-016	063	AZ18	741	N/A		CLS 262# / +1-1/8” / -3/16” (NOR), +1-1/8” / -3/16” (MAX)				
DS	2-63-018	063	AZ21	738			CLS 2” / 1-1/8” (T), 1/16” (C)				
DS	2-63-019	063	AZ16	740			CLS 2-1/2” / 1/8” (T), 1-15/16” (C)				
VS	2-63-020	063	AZ12	740	N/A		CLS 1,375# / +1-9/16” / -1/4” (NOR), +1-7/8” / -1/2” (MAX)				
DS	2-63-022	063	AZ358	740			CLS 4” / 1/4” (T), 2-3/4” (C)				
DS	2-63-023	063	AZ342	736			CLS 1-1/4” / 3/8”(T), 1/16” (C)				

Attachment 22
(Page 22 of 37)

DYNAMIC SNUBBERS, VARIABLE SPRINGS AND CONSTANT SPRINGS 557° (553°-560°) PLATEAU DATA

Date _____

TYPE SUPT	SUPPORT IDENTIFIER	SYS	LOCATION	ELEV	SERIAL NO.	TEMP °F	SET POINT / MOVEMENT	SCALE READING	PERFORMER INIT/ DATE	VERIFIER INIT/ DATE	COMMENTS
DS	2-63-024	063	AZ342	740			CLS 2-3/4” / 1/8” (T),15/16” (C)				
VS	2-63-026	063	AZ320	741	N/A		CLS 1,332# / +3/4” / 0” (NOR), +13/16” / -1/16” (MAX)				
VS	2-63-028	063	AZ308	741	N/A		CLS 1,868# / 7/8” (UP) (NOR), 7/8”(UP) (MAX)				
DS	2-63-029	063	AZ308	735			CLS 1-1/4” / 7/8” (T), 0” (C)				
DS	2-63-030	063	AZ308	738			CLS 3” / 1/4” (T), 1/16” (C)				
DS	2-63-031	063	AZ300	735			CLS 1-1/2” / 7/16” (T), 1/16” (C)				
DS	2-63-032	063	AZ300	734			CLS 2” / 13/16” (T), 1/8” (C)				
DS	2-63-035	063	AZ35	728			CLS 3” / 0” (T), 1” (C)				
DS	2-63-038E	063	AZ35	731			CLS 2-3/4” / 1/4” (T), 1/16” (C)				
DS	2-63-038W	063	AZ35	731			CLS 3-1/4” / 1/4” (T), 1/16” (C)				
DS	2-63-042	063	AZ297	734			CLS 2-3/4” / 1/2” (T), 1/16” (C)				
DS	2-63-043	063	AZ297	734			CLS 2-3/8” / 1/8” (T), 0” (C)				
DS	2-63-055	063	AZ111	741			CLS 3-5/8” / 1/8” (T), 2-1/8” (C)				
DS	2-63-062	063	AZ215	741			CLS 3-1/2” / 1/8” (T), 1-1/2” (C)				
VS	2-63-063	063	AZ218	736	N/A		CLS 2,106# / +13/16” / 0” (NOR), +13/16” / -1/16” (MAX)				

Attachment 22
(Page 23 of 37)

DYNAMIC SNUBBERS, VARIABLE SPRINGS AND CONSTANT SPRINGS 557° (553°-560°) PLATEAU DATA

Date _____

TYPE SUPT	SUPPORT IDENTIFIER	SYS	LOCATION	ELEV	SERIAL NO.	TEMP °F	SET POINT / MOVEMENT	SCALE READING	PERFORMER INIT/ DATE	VERIFIER INIT/ DATE	COMMENTS
DS	2-63-064	063	AZ218	734			CLS 2-1/4” / 0” (T), 3/4” (C)				
DS	2-63-069	063	AZ215	740			CLS 1-3/8” / 1-7/16” (T), 1/16” (C)				
VS	2-63-070	063	AZ225	729	N/A		CLS 3,860# / +5/16” (UP) / -0” (DN) (NOR), +5/16” (UP) / -0” (DN) (MAX)				
DS	2-63-072	063	AZ218	725			CLS 2-1/2” / 1/16” (T), 1/8” (C)				
DS	2-63-078	063	AZ145	736			CLS 3-3/4” / 1/8”(T), 3/4” (C)				
VS	2-63-080	063	AZ145	729	N/A		CLS 1,520# / +1/32” / -1/2” (NOR), +1/32” / -1/2” (MAX)				
DS	2-63-095N	063	AZ215	727			CLS 1-3/4” / 0” (T), 5/8” (C)				
DS	2-63-095S	063	AZ215	727			CLS 2” / 1/8” (T), 1/16” (C)				
DS	2-63-156	063	AZ300	725			CLS 2” / 1/16” (T), 11/16” (C)				
DS	2-63-161	063	AZ300	723			CLS 1-15/16” / 1/16” (T), 5/16” (C)				
DS	2-63-163	063	AZ304	722			CLS 1-1/2” / 1/16”(T), 3/16” (C)				
DS	2-63-164	063	AZ302	722			CLS 2-1/4” / 1/2” (T), 1/8” (C)				
VS	2-63-165	063	AZ302	722	N/A		CLS 66# / +1/4” / -0” (NOR), +5/16” / -1/16” (MAX)				
DS	2-63-169	063	AZ295	732			CLS 1-5/8” / 1/16” (T), 1/16” (C)				
DS	2-63-185	063	AZ42	729			CLS 2-1/2” / 1/16” (T), 1-1/8” (C)				

Attachment 22
(Page 24 of 37)

DYNAMIC SNUBBERS, VARIABLE SPRINGS AND CONSTANT SPRINGS 557° (553°-560°) PLATEAU DATA

Date _____

TYPE SUPT	SUPPORT IDENTIFIER	SYS	LOCATION	ELEV	SERIAL NO.	TEMP °F	SET POINT / MOVEMENT	SCALE READING	PERFORMER INIT/ DATE	VERIFIER INIT/ DATE	COMMENTS
DS	2-63-285	063	AZ181	730			CLS 1-3/4” / 3/16” (T), 1/16” (C)				
VS	2-63-342	063	AZ188	731	N/A		CLS 2,356# / 3/8” (UP)				
DS	2-63-365	063	AZ37	727			CLS 2-7/8” / 1/16” (T), 3/4” (C)				
VS	2-63-367	063	AZ37	731	N/A		CLS 2,140# / +7/8” / -0” (NOR), +1-3/16” / -1/4” (MAX)				
VS	2-63-451	063	AZ321	725	N/A		CLS 2,900# / +3/8” / -1/16” (NOR), +3/4” / -1/2” (MAX)				
DS	2-63-453	063	AZ324	724			CLS 2-7/8” / 1/16” (T), 3/8” (C)				
DS	2-63-458	063	AZ324	723			CLS 4-1/2” / 11/16” (T), 1/16” (C)				
DS	2-63-459	063	AZ324	718			CLS 2” / 0” (T), 7/8” (C)				
VS	2-63-466E	063	AZ324	730	N/A		CLS 148# / +1/4” / -1/16” (NOR), +1/4” / -1/16” (MAX)				
VS	2-63-466W	063	AZ324	730	N/A		CLS 160# / +1/4” / -1/16” (NOR), +1/4” / -1/16” (MAX)				
DS	2-63-520	063	AZ45	723			CLS 1-3/4” / 1-1/16” (T), 1/16” (C)				
DS	2-63-526	063	AZ45	725			CLS 3-1/16” / 5/8” (T), 1/8” (C)				
DS	2-63-528	063	AZ293	733			CLS 1” / 1/16” (T), 1/16” (C)				
DS	2-63-571	063	AZ150	729			CLS 7/8” / 9/16" (T), 1/16" (C)				

Attachment 22
(Page 25 of 37)

DYNAMIC SNUBBERS, VARIABLE SPRINGS AND CONSTANT SPRINGS 557° (553°-560°) PLATEAU DATA

Date _____

TYPE SUPT	SUPPORT IDENTIFIER	SYS	LOCATION	ELEV	SERIAL NO.	TEMP °F	SET POINT / MOVEMENT	SCALE READING	PERFORMER INIT/ DATE	VERIFIER INIT/ DATE	COMMENTS
DS	2-63-573	063	AZ181	730			CLS 1-1/2” / 1/16” (T), 1/4” (C)				
DS	2-63-584	063	AZ39	732			CLS 1-5/16” / 1-1/2” (T), 1/16” (C)				
VS	2-63-588	063	AZ142	731	N/A		CLS 1,988# / -1/8” (EXT)				
DS	2-63-592	063	AZ344	741			CLS 1-1/2” / 2-5/16” (T), 1/2” (C)				
DS	47A432-1-8T	063	U-A12	688			CLS 3-7/16” / 1/8” (T), 7/8” (C)				
DS	47A432-1-8B	063	U-A12	688			CLS 3-7/16” / 1/8” (T), 7/8” (C)				
DS	47A432-3-6	063	AZ37	728			CLS 2-3/4” / 1/8” (T), 3/8” (C)				
DS	47A432-3-8	063	AZ142	727			CLS 3” / 0” (T), 3/8” (C)				
DS	2-47A432-3-13	063	AZ35	737			CLS 2-1/2” / 3/4” (T), 1/16” (C)				
DS	2-47A432-3-14	063	AZ38	727			CLS 1-3/4” / 1/16” (T), 11/16” (C)				
DS	2-47A432-3-15	063	AZ142	728			CLS 2-1/4” / 3/4” (T), 1/16” (C)				
DS	2-47A432-3-16	063	AZ157	725			CLS 4” / 3/8” (T), 3/8” (C)				
DS	47A435-3-8	063	U-A13	706			CLS 1-1/8” / 1/4” (T), 1/16” (C)				
DS	2-47A435-3-18T	063	U-C13	719			CLS 3” / 3/16” (T), 3/8” (C)				
DS	2-47A435-3-18B	063	U-C13	719			CLS 3” / 3/16” (T), 3/8” (C)				
DS	2-47A435-12-6	063	AZ291	721			CLS 2” / 1/16” (T), 3/8” (C)				
DS	47A435-12-62	063	AZ324	731			CLS 5/8” / 5/16” (T), 1/16” (C)				

Attachment 22
(Page 26 of 37)

DYNAMIC SNUBBERS, VARIABLE SPRINGS AND CONSTANT SPRINGS 557° (553°-560°) PLATEAU DATA

Date _____

TYPE SUPT	SUPPORT IDENTIFIER	SYS	LOCATION	ELEV	SERIAL NO.	TEMP °F	SET POINT / MOVEMENT	SCALE READING	PERFORMER INIT/ DATE	VERIFIER INIT/ DATE	COMMENTS
DS	47A435-12-89	063	AZ324	728			CLS 1-1/4” / 3/16” (T), 1/16” (C)				
DS	2-47A435-12-93	063	AZ300	723			CLS 5/8” / 1-5/16” (T), 1/16” (C)				
DS	47A435-13-60	063	AZ32	723			CLS 1” / 7/8” (T), 0” (C)				
VS	47A435-13-73	063	AZ347	740	N/A		CLS 1,125# / +11/16” / -3/16” (NOR), + 7/8” / -5/16” (MAX)				
DS	2-47A435-13-117	063	AZ45	721			CLS 1-3/4” / 1/16” (T), 1” (C)				
DS	2-47A435-13-118	063	AZ45	718			CLS 2” / 3/16” (T),1/16” (C)				
VS	2-47A435-13-119	063	AZ45	718	N/A		CLS 91# / +1/16” / -1/16” (NOR), +1/4” / -1/4” (MAX)				
VS	47A435-14-61	063	AZ125	721	N/A		CLS 1,715# / +3/16” (UP) (NOR), 1/2” (UP) (MAX)				
DS	47A435-14-80N	063	AZ146	725			CLS 1-1/2" / 1/16" (T), 5/16" (C)				
DS	47A435-14-80S	063	AZ146	725			CLS 1-1/2" / 1/16" (T), 5/16" (C)				
VS	47A435-14-81	063	AZ145	730	N/A		CLS 175# / +.01” / -.34” (NOR), +.02” / -.40” (MAX)				
VS	47A435-14-84	063	AZ150	730	N/A		CLS 48# / +0” UP, -3/16” DOWN (NOR), +0” UP, -3/16” DOWN (MAX)				
DS	2-47A435-14-107	063	AZ143	727			CLS 1-1/4” / 1/8” (T), 3/8” (C)				

Attachment 22
(Page 27 of 37)

DYNAMIC SNUBBERS, VARIABLE SPRINGS AND CONSTANT SPRINGS 557° (553°-560°) PLATEAU DATA

Date _____

TYPE SUPT	SUPPORT IDENTIFIER	SYS	LOCATION	ELEV	SERIAL NO.	TEMP °F	SET POINT / MOVEMENT	SCALE READING	PERFORMER INIT/ DATE	VERIFIER INIT/ DATE	COMMENTS
DS	2-47A435-14-109	063	AZ199	721			CLS 1-11/16” / 0” (T), 7/8” (C)				
VS	47A435-15-58	063	AZ228	720	N/A		CLS 154# / +.02” / -.01” (NOR), +.34” / -.32” (MAX)				
DS	47A435-15-70	063	AZ232	718			CLS 2-3/8”/ 3/8” (T), 1/16” (C)				
DS	47A435-15-79	063	AZ219	724			CLS 1-1/2” / 0” (T), 3/4” (C)				
DS	47A435-15-97	063	AZ218	723			CLS 3” / 1/16” (T), 11/16” (C)				
DS	47A435-16-17	063	AZ286	729			CLS 1-1/8” / 1/16” (T), 3/16” (C)				
DS	47A435-16-21E	063	AZ292	733			CLS 2-7/16” / 1/16” (T), 1/16” (C)				
DS	47A435-16-21W	063	AZ292	733			CLS 3-1/8” / 1/16” (T), 1/16” (C)				
DS	47A435-16-31	063	AZ285	731			CLS 2 1/4” / 1/16” (T), 3/16” (C)				
DS	47A435-16-33N	063	AZ289	731			CLS 3” / 1/16” (T), 1/16” (C)				
DS	47A435-16-33S	063	AZ289	731			CLS 1” / 1/16” (T), 1/16” (C)				
DS	47A435-16-34N	063	AZ282	726			CLS 2-7/8” / 1/16” (T), 3/16” (C)				
DS	47A435-16-34S	063	AZ282	726			CLS 2” / 0” (T), 1/32” (C)				
DS	47A435-16-47	063	AZ289	733			CLS 2-3/4” / 1/16” (T), 3/16” (C)				
DS	47A435-16-50S	063	AZ298	724			CLS 2” / 1/16” (T), 5/16” (C)				
DS	47A435-16-50E	063	AZ298	724			CLS 2” / 1/8” (T), 3/8” (C)				
DS	47A435-16-51	063	AZ291	729			CLS 2” / 3/16” (T), 0” (C)				

Attachment 22
(Page 28 of 37)

DYNAMIC SNUBBERS, VARIABLE SPRINGS AND CONSTANT SPRINGS 557° (553°-560°) PLATEAU DATA

Date _____

TYPE SUPT	SUPPORT IDENTIFIER	SYS	LOCATION	ELEV	SERIAL NO.	TEMP °F	SET POINT / MOVEMENT	SCALE READING	PERFORMER INIT/ DATE	VERIFIER INIT/ DATE	COMMENTS
DS	47A435-16-55E	063	AZ295	732			CLS 2-7/8” / 1/16” (T), 1/8” (C)				
DS	47A435-16-55S	063	AZ295	732			CLS 2” / 1/8” (T), 1/4” (C)				
DS	47A435-16-62N	063	AZ294	725			CLS 1-3/16” / 1/16” (T), 0” (C)				
DS	47A435-16-62S	063	AZ294	725			CLS 1-3/16” / 1/16” (T), 0” (C)				
DS	47A435-16-65	063	AZ296	719			CLS 2-5/8” / 0” (T), 3/8” (C)				
DS	47A435-16-66	063	AZ296	719			CLS 2” / 1/8” (T), 1/4” (C)				
DS	2-47A435-16-73	063	AZ284	724			CLS 1-15/16” / 1/8” (T), 1/16” (C)				
VS	2-47A435-16-75	063	AZ284	724	N/A		CLS 155# / -1/16” (NOR), -1/16” (MAX)				
DS	2-47A435-16-76	063	AZ284	729			CLS 2” / 1/16” (T), 3/16” (C)				
DS	2-47A435-16-77	063	AZ285	729			CLS 2-3/16” / 1/16” (T), 3/8” (C)				
DS	2-47A435-16-78	063	AZ285	729			CLS 2” / 1/8” (T), 3/16” (C)				
VS	2-47A435-16-79	063	AZ298	731	N/A		CLS 210# / +5/16”, -1/16” (NOR) +3/8”, -1/16” (MAX)				
VS	47A437-1-25	063	T-A10	690	N/A		CLS 2,683# / +1/16” / 0” (NOR), +1/16” ‘ -1/16” (MAX)				
DS	2-47A437-1-62	063	U-A12	688			CLS 3-1/2” / 1/4” (T), 2-5/16” (C)				
DS	2-47A437-2-4	063	U-A11	681			CLS 2-7/8” / 5/16” (T), 1/16” (C)				

Attachment 22
(Page 29 of 37)

DYNAMIC SNUBBERS, VARIABLE SPRINGS AND CONSTANT SPRINGS 557° (553°-560°) PLATEAU DATA

Date _____

TYPE SUPT	SUPPORT IDENTIFIER	SYS	LOCATION	ELEV	SERIAL NO.	TEMP °F	SET POINT / MOVEMENT	SCALE READING	PERFORMER INIT/ DATE	VERIFIER INIT/ DATE	COMMENTS
DS	47A437-2-22	063	T-A11	684			CLS 2” / 0” (T), 1/4” (C)				
DS	47A437-2-24	063	U-A11	686			CLS 1-1/2” / 3/16”(T), 1/16” (C)				
VS	47A437-2-28N	063	U-A11	676	N/A		CLS 7,141# / +.06” / -.31 (NOR), +.06” / -.31” (MAX)				
VS	47A437-2-28S	063	U-A11	676	N/A		CLS 7,141# / +.06” / -.31 (NOR), +.06” / -.31” (MAX)				
VS	47A437-2-29E	063	U-A10	681	N/A		CLS 1,341# / +1/16” / -0” (NOR), +1/16” / -0” (MAX)				
VS	47A437-2-29W	063	U-A10	681	N/A		CLS 1509# / +1/16” / -0” (NOR), +1/16” / -0” (MAX)				
DS	63-2SIS-V142N	063	V-A10	687	N/A		CLS 2-1/2” / 3/16” (T), 1/4” (C)				
DS	63-2SIS-V142S	063	V-A10	687	N/A		CLS 2-1/2” / 3/16” (T), 1/4” (C)				
VS	63-2SIS-V143N	063	V-A11	690	N/A		CLS 978# / +1/4” / -0” (NOR), +1/8” / -3/16” (MAX)				
VS	63-2SIS-V143S	063	V-A11	690	N/A		CLS 1,775# / +1/4” / -0” (NOR), +1/8” / -3/16” (MAX)				
VS	63-2SIS-V145	063	V-A11	691	N/A		CLS 2,177# / +1/8” / -1/4” (NOR), +1/16” / -7/16” (MAX)				
DS	63-2SIS-R155	063	V-A12	688			CLS 3.4” / 0” (T), 13/16” (C)				

Attachment 22
(Page 30 of 37)

DYNAMIC SNUBBERS, VARIABLE SPRINGS AND CONSTANT SPRINGS 557° (553°-560°) PLATEAU DATA

Date _____

TYPE SUPT	SUPPORT IDENTIFIER	SYS	LOCATION	ELEV	SERIAL NO.	TEMP °F	SET POINT / MOVEMENT	SCALE READING	PERFORMER INIT/ DATE	VERIFIER INIT/ DATE	COMMENTS
VS	63-2SIS-V166N	063	U-A10	689	N/A		CLS 773 / +.21” / -.05” (NOR), +.22” / -.06” (MAX)				
VS	63-2SIS-V166S	063	U-A10	689	N/A		CLS 773 / +.21” / -.05” (NOR), +.22” / -.06” (MAX)				
DS	63-2SIS-R168N	063	U-A10	689			CLS 2-5/8” / 1/32” (T), 5/16” (C)				
DS	63-2SIS-R168S	063	U-A10	689			CLS 2-5/8” / 1/32” (T), 5/16” (C)				
DS	63-2SIS-R170	063	U-A12	687			CLS 3-1/2” / 0” (T), 1-9/16” (C)				
DS	63-2SIS-R211	063	V-A12	688			CLS 2-1/2” / 9/16” (T), 0” (C)				
DS	63-2SIS-R214	063	V-A11	686			CLS 3” / .89” (T), 0” (C)				
DS	63-2SIS-R216	063	U-A11	684			CLS 2-3/4” / 0” (T), 1/8” (C)				
DS	63-2SIS-R240N	063	U-A12	686			CLS 1” / 13/16”” (T), 0” (C)				
DS	63-2SIS-R240S	063	U-A12	686			CLS 2” / 13/16”” (T), 0” (C)				
DS	63-2SIS-R242	063	U-A12	686			CLS 2-5/8” / 11/16” (T), 0” (C)				
DS	63-2SIS-R245	063	T-A11	686			CLS 2-1/2” / 0” (T), 1/8” (C)				
DS	63-2SIS-R276	063	T-A11	689			CLS 2” / 5/16” (T), 0” (C)				

Attachment 22
(Page 31 of 37)

DYNAMIC SNUBBERS, VARIABLE SPRINGS AND CONSTANT SPRINGS 557° (553°-560°) PLATEAU DATA

Date _____

TYPE SUPT	SUPPORT IDENTIFIER	SYS	LOCATION	ELEV	SERIAL NO.	TEMP °F	SET POINT / MOVEMENT	SCALE READING	PERFORMER INIT/ DATE	VERIFIER INIT/ DATE	COMMENTS
VS	2-68-001	068	AZ147	724	N/A		CLS 5,695# / +3/8” / -0” (NOR), +5/8” / -1/4” (MAX)				
VS	2-68-005	068	AZ92	725	N/A		CLS 4,614 / +0” / -1-1/2” (NOR), +0” / -2-1/4” (MAX)				
CS	2-68-011N	068	AZ104	787	N/A		CLS 1.8 INC / +2.70” / -.11” (MAX)				
CS	2-68-011S	068	AZ104	787	N/A		CLS 1.8 INC / +2.70” / -.11” (MAX)				
DS	2-68-020	068	AZ104	733			CLS 2-11/16” / 5/8” (T), 1/16” (C)				
DS	2-68-021	068	AZ110	729			CLS 2-7/8” / 1/16” (T), 9/16” (C)				
DS	2-68-023E	068	AZ109	736			CLS 1-7/8” / 1/16” (T), 15/16” (C)				
DS	2-68-023W	068	AZ109	736			CLS 1-7/8” / 1/16” (T), 15/16” (C)				
DS	2-68-024	068	AZ108	736			CLS 2-1/8” / 1/16” (T), 7/8” (C)				
VS	2-68-025	068	AZ110	733	N/A		CLS 1,113# / +1/16” /-7/16” (NOR), +1/16 / -7/16” (MAX)				
VS	2-68-028	068	AZ104	754	N/A		CLS 758# / +.95” / -.05” (NOR), +1.29” / -.34” (MAX)				
DS	2-68-030	068	AZ110	732			CLS 3” / 1/4” (T), 3/8” (C)				
DS	2-68-031	068	AZ104	733			CLS 2-1/16” / 0” (T), 9/16” (C)				
DS	2-68-032	068	AZ98	736			CLS 1.81” / 0” (T), 1-3/16” (C)				
DS	2-68-033	068	AZ98	736			CLS 2-1/8” / 5/16” (T), 3/8” (C)				
DS	2-68-034	068	AZ98	733			CLS 1-1/8” / 1” (T), 1/16” (C)				

Attachment 22
(Page 32 of 37)

DYNAMIC SNUBBERS, VARIABLE SPRINGS AND CONSTANT SPRINGS 557° (553°-560°) PLATEAU DATA

Date _____

TYPE SUPT	SUPPORT IDENTIFIER	SYS	LOCATION	ELEV	SERIAL NO.	TEMP °F	SET POINT / MOVEMENT	SCALE READING	PERFORMER INIT/ DATE	VERIFIER INIT/ DATE	COMMENTS
DS	2-68-036	068	AZ98	733			CLS 1-15/16” / 1/4” (T), 3/4” (C)				
DS	2-68-042	068	AZ104	735			CLS 3-1/4” / 1/16” (T), 13/16” (C)				
VS	2-68-043	068	AZ108	735	N/A		CLS 678# / +.06” / -.32” (NOR), +.06” / -.32” (MAX)				
DS	2-68-044	068	AZ108	734			CLS 1-7/16” (+1/16”, -3/8”) / 5/8” (T), 1/16” (C)				
DS	2-68-050	068	AZ104	733			CLS 1-3/4” / 9/16”” (T), 1/8” (C)				
DS	2-68-053	068	AZ98	733			CLS 2-3/8” / 1/8” (T), 1-1/16” (C)				
DS	2-68-093	068	AZ100	784			CLS 3/4” / 4-5/8” (T), 1/8” (C)				
CS	2-68-094	068	AZ99	791	N/A		CLS 3/4” / 4-1/2” (UP)				
DS	2-68-096	068	AZ104	784			CLS 11/16” (± 1/8) / 3-13/16” (T), 1/8” (C)				
VS	2-68-334	068	AZ47	707	N/A		CLS 153# / +.01” / -.20” (NOR), +.11” / -.26” (MAX)				
DS	2-68-348	068	AZ142	706			CLS 162# . +.03” / -.63” (NOM), +.03” / -.75” (MAX)				
VS	2-68-379	068	AZ323	707	N/A		CLS 124# / 3/4” (DOWN)				
VS	2-68-382	068	AZ321	708	N/A		CLS 157# / .52” (DOWN (NOR), .78” (DOWN) (MAX)				
DS	2-68-404E	068	AZ82	754			CLS 5-3/8” / 1/16” (T), 4-7/8” (C)				

Attachment 22
(Page 33 of 37)

DYNAMIC SNUBBERS, VARIABLE SPRINGS AND CONSTANT SPRINGS 557° (553°-560°) PLATEAU DATA

Date _____

TYPE SUPT	SUPPORT IDENTIFIER	SYS	LOCATION	ELEV	SERIAL NO.	TEMP °F	SET POINT / MOVEMENT	SCALE READING	PERFORMER INIT/ DATE	VERIFIER INIT/ DATE	COMMENTS
DS	2-68-404W	068	AZ82	754			CLS 5-3/8” / 1/16” (T), 4-7/8” (C)				
DS	2-68-406E	068	AZ87	747			CLS 3” / 1/4” (T), 1/4” (C)				
DS	2-68-406W	068	AZ87	747			CLS 3” / 1/4” (T), 1/4” (C)				
DS	2-68-412N	068	AZ99	786			CLS 1-3/4” / 1/8” (T), 5/16” (C)				
DS	2-68-412S	068	AZ99	788			CLS 1-3/4” / 1/8” (T), 5/16” (C)				
DS	2-68-415N	068	AZ97	787			CLS 2” / 7/8” (T), 1/16” (C)				
DS	2-68-415S	068	AZ97	787			CLS 2” / 1-1/16” (T), 1/16” (C)				
DS	2-68-427	068	AZ97	778			CLS 2-3/4” / 1/8” (T), 3/8” (C)				
DS	2-68-429E	068	AZ104	761			CLS 2-9/16” / 1/4” (T), 9/16” (C)				
DS	2-68-429W	068	AZ104	761			CLS 2-9/16” / 1/4” (T), 9/16” (C)				
DS	2-47A465-1-108	068	AZ110	729			CLS 2-3/4” /1/16” (T), 1/2” (C)				
DS	47A465-2-23	068	AZ100	776			CLS 3-7/8” / 0” (T), 3-3/16” (C)				
DS	47A465-2-41	068	AZ104	775			CLS 1-1/2” / 1/16” (T), 1/4” (C)				
CS	47A465-2-42	068	AZ104	775	N/A		CLS 3/4” / 2.96” (UP)				
DS	47A465-2-46	068	AZ97	758			CLS 3” / 0” (T), 2-1/8” (C)				
VS	47A465-2-47	068	AZ100	758	N/A		CLS 130# / 2.10” (NOR), 2.12” (MAX)				
VS	2-47A465-2-81	068	AZ99	737	N/A		CLS 50# / +1/4” / -0” (NOR), +5/16” / -1/16” (MAX)				
DS	47A465-4-7E	068	AZ104	736			CLS 1-3/4 / 0” (T), 3/8” (C)				

Attachment 22
(Page 34 of 37)

DYNAMIC SNUBBERS, VARIABLE SPRINGS AND CONSTANT SPRINGS 557° (553°-560°) PLATEAU DATA

Date _____

TYPE SUPT	SUPPORT IDENTIFIER	SYS	LOCATION	ELEV	SERIAL NO.	TEMP °F	SET POINT / MOVEMENT	SCALE READING	PERFORMER INIT/ DATE	VERIFIER INIT/ DATE	COMMENTS
DS	47A465-4-7W	068	AZ104	736			CLS 1-3/8 ” / 1/16” (T), 3/16” (C)				
DS	47A465-8-60	068	AZ335	742			CLS 2-1/2” / 1/16” (T), 7/16” (C)				
DS	47A465-8-61	068	AZ65	742			CLS 2-11/16” / 1/16” (T), 1-11/16” (C)				
DS	47A465-8-63	068	AZ145	742			CLS 2-3/4” / 1/16” (T), 1-1/2” (C)				
VS	47A465-8-73	068	AZ40	752	N/A		CLS 144# / +2-1/6” / -1/16” (NOR), +2-7/16” / -7/16” (MAX)				
VS	2-47A465-8-97	068	AZ111	742	N/A		CLS 100 / +3/4” / -1/16” (NOR), +7/8” / -3/16” (MAX)				

Attachment 22
(Page 35 of 37)

DYNAMIC SNUBBERS, VARIABLE SPRINGS AND CONSTANT SPRINGS 557° (553°-560°) PLATEAU DATA

Date _____

TYPE SUPT	SUPPORT IDENTIFIER	SYS	LOCATION	ELEV	SERIAL NO.	TEMP °F	SET POINT / MOVEMENT	SCALE READING	PERFORMER INIT/ DATE	VERIFIER INIT/ DATE	COMMENTS
DS	2-74-008	074	AZ354	707			CLS 4-1/4” / 7/16” (T), 1-1/16” (C)				
DS	2-74-010	074	AZ354	707			CLS 3” / 7/16” (T), 1/16” (C)				
DS	2-74-011	074	AZ348	707			CLS 4” / .06” (T), 1.64” (C)				
VS	2-74-012	074	AZ347	707	N/A		CLS 2,340# / +.03” / -.66” (NOR), +.17” / -.83” (MAX)				
DS	2-74-015	074	AZ0	724			CLS 1-3/4” / .55” (T), .02” (C)				
DS	2-74-017	074	AZ0	722			CLS 1” / 3/16” (T), 0” (C)				
VS	2-74-022	074	AZ354	716	N/A		CLS 10,515# / +1/16 / -3/4” (NOR), +1/16” / -3/4” (MAX)				
DS	47A432-2-2	063	V-A11	718			CLS 3” / 0” (T), 13/16” (C)				
DS	47A432-3-4	074	AZ349	707			CLS 3-3/4” / 7/16” (T), 1/16” (C)				
VS	2-47A432-3-17	074	AZ354	707	N/A		CLS 3,482# / +1/16” / -3/8” (NOR), +1/16” / -3/8” (MAX)				
DS	2-47A432-6-17	063	V-A11	693			CLS 2-5/8” / 1/16” (T), 3/16” (C)				
DS	74-2RHR-R096	074	V-A11	688			CLS 3” / 1/16” (T), 1” (C)				
DS	74-2RHR-R014N	074	W-A10	732			CLS 1” / 0” (T), 1/4” (C)				
DS	74-2RHR-R014S	074	W-A10	732			CLS 1” / 0” (T), 1/4” (C)				
VS	74-2RHR-V015N	074	W-A10	733	N/A		CLS 661# / +1/4”, -1/16” (NOR), +1/4” / -1/16” (MAX)				

Attachment 22
(Page 36 of 37)

DYNAMIC SNUBBERS, VARIABLE SPRINGS AND CONSTANT SPRINGS 557° (553°-560°) PLATEAU DATA

Date _____

TYPE SUPT	SUPPORT IDENTIFIER	SYS	LOCATION	ELEV	SERIAL NO.	TEMP °F	SET POINT / MOVEMENT	SCALE READING	PERFORMER INIT/ DATE	VERIFIER INIT/ DATE	COMMENTS
VS	74-2RHR-V015S	074	W-A10	733	N/A		CLS 661# / +1/4", -1/16" (NOR), +1/4" / -1/16" (MAX)				
DS	74-2RHR-R028	074	V-A11	732			CLS 4-1/16" / 1/16" (T), 1/16" (C)				
VS	74-2RHR-V121	074	W-A10	719	N/A		CLS 711# / +1/16", -0" (NOR), +1/16", -0" (MAX)				
DS	74-2RHR-R216	074	W-A11	728			CLS 2" / 1/2" (T), 1/16" (C)				
DS	74-2RHR-R220	074	W-A11	729			CLS 3" / 1/16" (T), 1/8" (C)				
DS	74-2RHR-R058	074	V-A11	689			CLS 2-1/2" / 1/16" (T), 1" (C)				
VS	74-2RHR-V002	074	V-A10	729	N/A		CLS 1088# / +.31", -.09" (NOR), +.50" / -.25" (MAX)				
DS	74-2RHR-R003E	074	V-A10	727			CLS 2" / 1/32" (T), 9/16" (C)				
DS	74-2RHR-R003W	074	V-A10	727			CLS 1-1/2" / 1/32" (T), 9/16" (C)				
DS	74-2RHR-V006	074	V-A10	721			CLS 2-1/4" / 1/4" (T), 0" (C)				
VS	74-2RHR-V011	074	V-A10	730	N/A		CLS 1624# / +7/16", -1/8" (NOR), +5/8" / -5/16" (MAX)				
DS	74-2RHR-R230	074	W-A11	729			CLS 2-1/4" / 1/16" (T), 1/2" (C)				
DS	74-2RHR-R232	074	W-A11	729			CLS 3" / 0" (T), 7/16" (C)				
DS	74-2RHR-R037	074	W-A9	730			CLS 3" / 3/8" (T), 1/16" (C)				
VS	74-2RHR-V038	074	W-A9	730	N/A		CLS 2472# / +7/16", -1/16" (NOR), +7/16" / -1/16" (MAX)				

Attachment 22
(Page 37 of 37)

DYNAMIC SNUBBERS, VARIABLE SPRINGS AND CONSTANT SPRINGS 557° (553°-560°) PLATEAU DATA

Date _____

TYPE SUPT	SUPPORT IDENTIFIER	SYS	LOCATION	ELEV	SERIAL NO.	TEMP °F	SET POINT / MOVEMENT	SCALE READING	PERFORMER INIT/ DATE	VERIFIER INIT/ DATE	COMMENTS
VS	74-2RHR-V041	074	V-A9	734	N/A		CLS 1509# / +9/16", -1/16" (NOR), +11/16" / -1/16" (MAX)				
VS	63-2SIS-V134	063	V-A11	678	N/A		CLS 4,360# / +1/8" / -0" (NOR), +1/16" / -1/4" (MAX)				
VS	63-2SIS-V136	063	V-A11	676	N/A		CLS 2,082# / -5/32" (NOR), +1/32, -3/16" (MAX)				
VS	63-2SIS-V139NW	063	V-A10	677	N/A		CLS 263# / +0" / -.13" (NOR), +0" / -.14" (MAX)				
VS	63-2SIS-V139SE	063	V-A10	677	N/A		CLS 331# / +0" / -.13" (NOR), +0" / -.14" (MAX)				
VS	63-2SIS-V158	063	U-A11	678	N/A		CLS 6,135 / +1/16" / -0" (NOR), +1/8" / -1/8" (MAX)				
VS	63-2SIS-V163N	063	U-A10	677	N/A		CLS 1,850# / -1/16" (NOR), +0" / -1/8" (MAX)				
VS	63-2SIS-V163S	063	U-A10	677	N/A		CLS 1,244# / -1/16" (NOR), +0" / -1/8" (MAX)				
VS	63-2SIS-V179	063	V-A11	697	N/A		CLS 2,519# / +1/4" / -1/16" (NOR), +5/16" / -5/32" (MAX)				
VS	63-2SIS-V180	063	V-A11	723	N/A		CLS 4,306# / +1/8" / 0" (NOR), +3/16" / -3/16" (MAX)				

Attachment 23
(Page 1 of 6)

DYNAMIC SNUBBERS, VARIABLE SPRINGS AND CONSTANT SPRINGS CVCS DATA

Date _____

COLD LOAD SETTING (CLS) INCREMENT (INC)

NORMAL CHARGING (6.6[2.2]) per 2-TOP-062-02, SECTION 5.4											
TYPE SUPT.	SUPPORT IDENTIFIER	SYS	LOCATION	ELEV.	SERIAL NO.	TEMP °F	SET POINT / MOVEMENT	SCALE READING	PERFORMER INIT/ DATE	VERIFIER INIT/ DATE	COMMENTS
DS	2-62A-319	062	AZ128	716			CLS 1” / 1/16” (T), 1/16” (C)				
DS	2-62A-320	062	AZ107	723			CLS 1” / 11/16” (T), 0” (C)				
DS	2-62A-377	062	AZ95	729			CLS 2-3/4” / 1/8” (T), 1-7/16” (C)				
VS	2-62A-562	062	AZ43	727	N/A		CLS 422# / 1/4” (UP)				
DS	2-62A-382	062	AZ48	727			CLS 1-1/4” / 1-9/16” (T), 1/8” (C)				
DS	2-62A-557	062	AZ43	727			CLS 3-3/16” (+1/16”, 3/16”) / 7/16” (T), 2-3/4” (C)				
DS	2-62A-559	062	AZ43	727			CLS 3” / 1/4” (T), 1-1/2” (C)				
DS	2-62A-561	062	AZ43	727			CLS 2” / 15/16” (T), 5/16” (C)				
DS	2-62A-562	062	AZ43	727			CLS 422# / 1/4” (UP)				
DS	2-62A-563	062	AZ43	727			CLS 1-1/2” / 13/16” (T), 0” (C)				
DS	2-62A-371	062	AZ128	728			CLS 7/8” / 1/4” (T),0” (C)				
DS	2-62A-369	062	AZ128	727			CLS 1-7/8” / 0” (T), 1/2” (C)				

Attachment 23
(Page 2 of 6)

DYNAMIC SNUBBERS, VARIABLE SPRINGS AND CONSTANT SPRINGS CVCS DATA

Date _____

COLD LOAD SETTING (CLS) INCREMENT (INC)

ALTERNATE CHARGING (6.6[3.2]) per 2-TOP-062-02, SECTION 5.4											
TYPE SUPT.	**SUPPORT IDENTIFIER**	**SYS**	**LOCATION**	**ELEV.**	**SERIAL NO.**	**TEMP °F**	**SET POINT / MOVEMENT**	**SCALE READING**	**PERFORMER INIT/ DATE**	**VERIFIER INIT/ DATE**	**COMMENTS**
CS	2-62A-346	062	AZ103	732	N/A		CLS 515# / 2-3/8” (UP)				
DS	2-62A-360	062	AZ322	727			CLS 3-3/4” / 1/2” (T), 2-7/16” (C)				
DS	2-62A-357	062	AZ343	727			CLS 3/4” / 2-13/16” (T), 0” (C)				
DS	2-62A-358	062	AZ328	727			CLS 1/2” (+1/4”, -0”) / 3-5/8” (T), 1/16” (C)				
DS	2-62A-362	062	AZ322	727			CLS 2.19” / 1/8” (T), 3/8” (C)				
DS	2-62A-366	062	AZ318	727			CLS 1-1/8” / 1-13/16” (T), 1/8” (C)				

Attachment 23
(Page 3 of 6)

DYNAMIC SNUBBERS, VARIABLE SPRINGS AND CONSTANT SPRINGS CVCS DATA

Date _____

COLD LOAD SETTING (CLS) INCREMENT (INC)

EXCESS LETDOWN HEAT EXCHANGER (6.6[4.2]) per 2-TOP-062-02, SECTION 7.4											
TYPE SUPT.	SUPPORT IDENTIFIER	SYS	LOCATION	ELEV.	SERIAL NO.	TEMP °F	SET POINT / MOVEMENT	SCALE READING	PERFORMER INIT/ DATE	VERIFIER INIT/ DATE	COMMENTS
VS	2-62A-584	062	AZ178	730	N/A		CLS 35# / 3/8” (UP)				
VS	2-62A-637	062	AZ110	719	N/A		CLS 112# / +.09” / 0” (NOR), +.09” / 0” (MAX)				
DS	2-62A-808	062	AZ210	726			CLS 3-1/8” / 1/16” (T), 2-3/16” (C)				
DS	2-62A-809	062	AZ210	725			CLS 3-1/4” / .02” (T), 2.07” (C)				
DS	2-62A-810	062	AZ208	725			CLS 3/4” / 2-3/4” (T), 0” (C)				
DS	2-62A-630	062	AZ150	729			CLS 2” / 0” (T), 3/4 (C)				
DS	2-62A-802	062	AZ200	719			CLS 2-1/4” / 1-1/8” (T), 0” (C)				

Attachment 23
(Page 4 of 6)

DYNAMIC SNUBBERS, VARIABLE SPRINGS AND CONSTANT SPRINGS CVCS DATA

Date _____

COLD LOAD SETTING (CLS) INCREMENT (INC)

NORMAL LETDOWN (6.6[5.2]) per 2-TOP-062-02, SECTION 5.4											
TYPE SUPT.	SUPPORT IDENTIFIER	SYS	LOCATION	ELEV.	SERIAL NO.	TEMP °F	SET POINT / MOVEMENT	SCALE READING	PERFORMER INIT/ DATE	VERIFIER INIT/ DATE	COMMENTS
VS	2-62A-290	062	AZ215	705’	N/A		CLS 1,114# / 1.07” (UP)				
VS	2-62A-530	062	AZ45	705	N/A		CLS 568# / 0” / -.03 (NOR), +.02" / .05” (MAX)				
VS	2-62A-532	062	AZ52	706	N/A		CLS 460 / +.02” / 0” (NOR), +.02” / -0” (MAX)				
VS	2-62A-535	062	AZ48	705’	N/A		CLS 589# / 1/8” (DOWN)				
VS	2-62A-240	062	AZ110	728’	N/A		CLS 813# / +1/1/6” / -1/16” (NOR), +1/1/6” / -1/16” (MAX)				
DS	2-62A-291	062	AZ215	711’			CLS 2-3/4” / 0” (T), 2-1/8” (C)				
DS	2-62A-294	062	AZ215	727’			CLS 2-1/16” / 1/2” (T), 5/8” (C)				
VS	2-62A-621	062	AZ302	716’	N/A		CLS 117# / +.02”/ -.39” (NOR) +.03”/ -.41” (MAX)				
DS	2-62A-247	062	AZ81	704			CLS 4-1/4” / 1-16” (T), 11/16” (C)				
DS	2-62A-254	062	AZ50	706’			CLS 1-1/8” / 1/16” (T), 1/8” (C)				

Attachment 23
(Page 5 of 6)

DYNAMIC SNUBBERS, VARIABLE SPRINGS AND CONSTANT SPRINGS CVCS DATA

Date _____

NORMAL LETDOWN (6.6[5.2]) per 2-TOP-062-02, SECTION 5.4											
TYPE SUPT.	SUPPORT IDENTIFIER	SYS	LOCATION	ELEV.	SERIAL NO.	TEMP °F	SET POINT / MOVEMENT	SCALE READING	PERFORMER INIT/ DATE	VERIFIER INIT/ DATE	COMMENTS
DS	2-62A-262	062	AZ47	706’			CLS 13/16” / 1/8” (T), 1/4” (C)				
DS	2-62A-269	062	AZ46	706’			CLS 2” / 1/16” (T), 1/4” (C)				
DS	2-62A-533	062	AZ50	706’			CLS 5/8” / 3/16” (T),1/16” (C)				
DS	2-62A-624	062	AZ44	706’			CLS 2-5/8” / 1/16” (T), 1/16” (C)				
DS	2-62A-625	062	AZ57	706’			CLS 1-7/8” / 3/16” (T), 1/16” (C)				
DS	2-62A-319	062	AZ128	716			CLS 1” / 1/16” (T), 1/16” (C)				
DS	2-62A-320	062	AZ107	723’			CLS 1” / 11/16” (T), 0” (C)				

Attachment 23
(Page 6 of 6)

DYNAMIC SNUBBERS, VARIABLE SPRINGS AND CONSTANT SPRINGS CVCS DATA

Date _____

COLD LOAD SETTING (CLS) INCREMENT (INC)

AUXILIARY SPRAY 160°F to 140°F per 2-TOP-068-04, Section 8.2											
TYPE SUPT.	SUPPORT IDENTIFIER	SYS	LOCATION	ELEV.	SERIAL NO.	TEMP °F	SET POINT / MOVEMENT	SCALE READING	PERFORMER INIT/ DATE	VERIFIER INIT/ DATE	COMMENTS
DS	2-62A-319	062	AZ128	719			CLS 1” / 1/16” (T), 1/16” (C)				
DS	2-62A-320	062	AZ107	723			CLS 1” / 11/16” (T), 0” (C)				
CS	2-68-11N	068	AZ104	787	N/A		CLS 1.8 INC / +2.7” / -.11” (MAX)				
CS	2-68-11S	068	AZ104	787	N/A		CLS 1.8 INC / +2.7” / -.11” (MAX)				
DS	2-68-031	068	AZ103	733			CLS 2-1/16” / 0” (T), 9/16” (C)				
DS	2-68-42	068	AZ104	735			CLS 3-1/4” / 1/16” (T), 13/16” (C)				
DS	2-68-44	068	AZ107	734			CLS 1-7/16” (+1/16”, -3/8”) 5/8” (T), 1/16” (C)				

Attachment 24
(Page 1 of 1)

DYNAMIC SNUBBERS, VARIABLE SPRINGS AND CONSTANT SPRINGS REACTOR COOLANT SYSTEM PRZR SPRAY DATA

Date _____

COLD LOAD SETTING (CLS) INCREMENT (INC)

(STEP 6.7[2.2]) During the performance of 2-PTI-068-03 Sections 6.6, 6.7 and 6.8											
TYPE SUPT.	SUPPORT IDENTIFIER	SYS	LOCATION	ELEV.	SERIAL NO.	TEMP °F	SET POINT / MOVEMENT	SCALE READING	PERFORMER INIT/ DATE	VERIFIER INIT/ DATE	COMMENTS
VS	2-68-25	068	AZ110	733’	N/A		CLS 1,113# / +1/16” / -7/16” (NOR), +1/16” / 7/16” (MAX)				
CS	2-68-11N	068	AZ104	787	N/A		CLS 1.8 INC / +2.7” / -.11” (MAX)				
CS	2-68-11S	068	AZ104	787	N/A		CLS 1.8 INC / +2.7” / -.11” (MAX)				
DS	2-68-31	068	AZ104	733’			CLS 2-1/16” / 0”(T), 9/16” (C)				
DS	2-68-32	068	AZ98	736			CLS 1.8” / 0” (T), 1-3/16” (C)				
DS	2-68-33	068	AZ98	736’			CLS 21/8” / 5/16” (T), 3/8” (C)				
DS	2-68-34	068	AZ98	733			CLS 1-1/8” / 1” (T), 1/16” (C)				
DS	2-68-36	068	AZ98	733’			CLS 1-15/16” / 1/4” (T), 3/4” (C)				
DS	2-68-53	068	AZ98	733’			CLS 2-3/8” / 1/8” (T), 1-1/16” (C)				
DS	2-68-23E	068	AZ109	736’			CLS 1-7/8” / 1/16” (T), 15/16” (C)				
DS	2-68-23W	068	AZ109	736’			CLS 1-7/8” / 1/16” (T), 15/16” (C)				

Attachment 25
(Page 1 of 6)

DYNAMIC SNUBBERS, VARIABLE SPRINGS AND CONSTANT SPRINGS SGBD DATA

Date _____

COLD LOAD SETTING (CLS) INCREMENT (INC)

STEAM GENERATOR #1											
TYPE SUPT.	SUPPORT IDENTIFIER	SYS	LOCATION	ELEV.	SERIAL NO.	TEMP °F	SET POINT / MOVEMENT	SCALE READING	PERFORMER INIT/ DATE	VERIFIER INIT/ DATE	COMMENTS
DS	2-01B-003	015	AZ22	727’			CLS 1-1/2” / 1/16” (T), 3/4” (C)				
VS	47A400-6-185	015	AZ35	730	N/A		CLS 148# / 3/16” (UP)				
DS	47A400-6-306E	015	AZ45	729			CLS 1” / 1-7/16” (T), 0” (C)				
DS	47A400-6-306W	015	AZ45	729			CLS 1” / 13/16” (T), 1/8” (C)				
DS	47A400-6-310	015	AZ35	736			CLS 1/2” / 1-3/8” (T), 0” (C)				
VS	47A400-6-312	015	AZ55	750	N/A		CLS 422# / 1/2” (UP)				
DS	47A400-6-364	015	U-A14 SVRM	741			CLS 1-1/4” / 11/16” (T), 1/16” (C)				
DS	47A400-7-93	015	AZ22	732			CLS 1-5/8” / .026” (T), 1.01” (C)				

Attachment 25
(Page 2 of 6)

DYNAMIC SNUBBERS, VARIABLE SPRINGS AND CONSTANT SPRINGS SGBD DATA

Date _____

COLD LOAD SETTING (CLS) INCREMENT (INC)

STEAM GENERATOR #2											
TYPE SUPT.	SUPPORT IDENTIFIER	SYS	LOCATION	ELEV.	SERIAL NO.	TEMP °F	SET POINT / MOVEMENT	SCALE READING	PERFORMER INIT/ DATE	VERIFIER INIT/ DATE	COMMENTS
VS	2-01B-042	015	AZ14	714	N/A		CLS 263# / +1/16”, -7/8” (NOR), +3/16”, -1-1/6” (MAX)				
VS	2-01B-062	015	AZ148	712	N/A		CLS 271# / 0”, -7/8” (NOR), +1/4” / -1-1/4” (MAX)				
VS	2-01B-172	015	U-A15	747	N/A		CLS 681# / +.01” / -.45” (NOR), +.27” / -.31” (MAX)				
VS	47A400-6-338	015	AZ150	739	N/A		CLS 234# / 3/8” (UP)				
VS	47A400-6-339	015	AZ167	731’	N/A		CLS 331# / 5/16” (UP)				
DS	2-47A400-6-406	015	AZ175	728			CLS 1-3/4” / 11/16” (T), -1/16” (C)				
DS	2-47A400-6-413	015	AZ162	730			CLS 1-3/16” / 1-5/8” (T), 0” (C)				

Attachment 25
(Page 3 of 6)

DYNAMIC SNUBBERS, VARIABLE SPRINGS AND CONSTANT SPRINGS SGBD DATA

Date _____

COLD LOAD SETTING (CLS) INCREMENT (INC)

STEAM GENERATOR #3											
TYPE SUPT.	SUPPORT IDENTIFIER	SYS	LOCATION	ELEV.	SERIAL NO.	TEMP °F	SET POINT / MOVEMENT	SCALE READING	PERFORMER INIT/ DATE	VERIFIER INIT/ DATE	COMMENTS
VS	2-01B-080	015	AZ14	711	N/A		CLS 440# / +.03” / -.90” (NOR, +.33” / -1.12” (MAX)				
DS	2-01B-086	015	AZ60	708’			CLS 5” / .15” (T), 4.09” (C)				
DS	2-01B-095	015	AZ126	708’			CLS 1-1/8” / 4-1/4”(T), 3/16” (C)				
DS	2-01B-097	015	AZ129	708’			CLS 3” / .09” (T), 1.5” (C)				
DS	2-01B-099	015	AZ138	708’			CLS 1” / 1-5/8” (T), 1/16” (C)				
VS	2-01B-109	015	AZ200	714	N/A		CLS 489# / +1/16” / -5/8” (NOR), +1/8” / -11/16” (MAX)				
VS	47A400-6-346	015	AZ190	726	N/A		CLS 167# / +7/16”, -0”				
VS	47A400-6-349	015	AZ225	731	N/A		CLS 289# / -1/16” / +1/4” (NOR), -7/16” / +9/16” (MAX)				
VS	47A400-6-351	015	AZ225	754	N/A		CLS 735# / +0” / -.05” (NOR), +.15” / -,23” (MAX)				
VS	47A400-6-354	015	AZ185	735	N/A		CLS 322# / +3/4” / -0” (NOR), +1-1/4” / -1-5/16” (MAX)				
DS	47A400-6-356	015	AZ200	729			CLS 1.8” / .04” (T), 1.04” (C)				

Attachment 25
(Page 4 of 6)

DYNAMIC SNUBBERS, VARIABLE SPRINGS AND CONSTANT SPRINGS SGBD DATA

Date _____

STEAM GENERATOR #3											
TYPE SUPT.	SUPPORT IDENTIFIER	SYS	LOCATION	ELEV.	SERIAL NO.	TEMP °F	SET POINT / MOVEMENT	SCALE READING	PERFORMER INIT/ DATE	VERIFIER INIT/ DATE	COMMENTS
DS	47A400-6-357	015	AZ200	729			CLS 3/4” / 1.08” (T), .01” (C)				

Attachment 25
(Page 5 of 6)

DYNAMIC SNUBBERS, VARIABLE SPRINGS AND CONSTANT SPRINGS SGBD DATA

Date _____

COLD LOAD SETTING (CLS) INCREMENT (INC)

STEAM GENERATOR #4											
TYPE SUPT.	SUPPORT IDENTIFIER	SYS	LOCATION	ELEV	SERIAL NO.	TEMP °F	SET POINT / MOVEMENT	SCALE READING	PERFORMER INIT/ DATE	VERIFIER INIT/ DATE	COMMENTS
DS	2-01B-123	015	AZ347	736’			CLS 1-1/4” / 1-1/2” (T), 1/16” (C)				
DS	2-01B-128B	015	AZ341	736’			CLS 2-1/2” / 0” (T), 13/16” (C)				
DS	2-01B-128T	015	AZ341	736’			CLS 2-1/2” / 0” (T), 13/16” (C)				
DS	2-01B-129	015	AZ339	730’			CLS 3” / 1/32” (T), 2-1/6” (C)				
DS	2-01B-130	015	AZ339	725’			CLS 3-3/8” / 0” (T), 2-1/4” (C)				
DS	2-01B-131	015	AZ339	727			CLS 2-5/8” / 5/16” (T), 1-5/16” (C)				
VS	2-01B-133	015	AZ339	728’	N/A		CLS 88# / 0”/ -1/16” (NOR) +3/16”/ -1/4” (MAX)				
DS	2-01B-251	015	AZ347	736’			CLS 1-11/16” / 11/16” (T), 1/16” (C)				
DS	2-01B-254	015	AZ347	736’			CLS 2-5/8” / 1/16” (T), 1/4” (C)				
VS	47A400-6-318	015	AZ305	736	N/A		CLS 385# / 3/16”/ -0” (NOR) +3/16”/ -0” (MAX)				
DS	47A400-6-321	015	AZ355	726’			CLS 5/8” / 1-7/16” (T), 0” (C)				
DS	47A400-6-322	015	AZ355	731’			CLS 2” / 3/16” (T), 0” (C)				

Attachment 25
(Page 6 of 6)

DYNAMIC SNUBBERS, VARIABLE SPRINGS AND CONSTANT SPRINGS SGBD DATA

Date _____

STEAM GENERATOR #4											
TYPE SUPT.	SUPPORT IDENTIFIER	SYS	LOCATION	ELEV	SERIAL NO.	TEMP °F	SET POINT / MOVEMENT	SCALE READING	PERFORMER INIT/ DATE	VERIFIER INIT/ DATE	COMMENTS
VS	47A400-6-323	015	AZ355	731’	N/A		CLS 315# / +1/4”/ -0” (NOR) +1/4”/ -0” (MAX)				
DS	47A400-6-324	015	AZ315	731’			CLS 1-15/16”/ 3/16” (T), 1/16” (C)				
VS	47A400-6-325	015	AZ325	731’	N/A		CLS 242# / 3/16” (UP)				
VS	47A400-6-326	015	AZ350	727’	N/A		CLS 159# / +1/8” / 0” (NOR), +1/8” / 0” MAX				
DS	47A400-6-328	015	AZ339	730’			CLS 1-11/16” / 1/64” (T), 15/16” (C)				
DS	47A400-6-329	015	AZ300	729’			CLS 2” / 0” (T), 1-1/8” (C)				

Attachment 26
(Page 1 of 3)

DYNAMIC SNUBBERS, VARIABLE SPRINGS AND CONSTANT SPRINGS TDAFP STEAM PIPING DATA

Date _____

COLD LOAD SETTING (CLS) INCREMENT (INC)

(STEP 6.8[2.2]) During 557°F Plateau From Main Steam Loop 1											
TYPE SUPT.	**SUPPORT IDENTIFIER**	**SYS**	**LOCATION**	**ELEV.**	**SERIAL NO.**	**TEMP °F**	**SET POINT / MOVEMENT**	**SCALE READING**	**PERFORMER INIT/ DATE**	**VERIFIER INIT/ DATE**	**COMMENTS**
VS	03B-2AFW-V227	003	U-A14	748	N/A		CLS 972 / +.58” / -.03" (NOR), +.58" / -.03" (MAX)				
DS	03B-2AFW-R228	003	U-A14	748			CLS 3” / .04” (T), .58” (C)				
DS	03B-2AFW-R229	003	U-A15	748			CLS 2” / 7/8” (T), 1/8” (C)				
(STEP 6.8[2.2]) During 557°F Plateau From Main Steam Loop 4											
DS	03B-2AFW-R232	003	U-A14	748			CLS 2-3/4” / 1/4” (T), 7/16” (C)				
DS	03B-2AFW-R233	003	U-A14	748			CLS 3-5/16” / 5/16” (T), 1-7/16” (C)				
VS	03B-2AFW-V234	003	U-A14	752	N/A		CLS 843# / + 7/16” / -1/16” (NOR), +1/2” / -1/16” (MAX)				

Attachment 26
(Page 2 of 3)

DYNAMIC SNUBBERS, VARIABLE SPRINGS AND CONSTANT SPRINGS TDAFP STEAM PIPING DATA

Date _____

(STEP 6.8[2.2]) During 557°F Plateau From Main Steam Loop 1 and Loop 4 Common											
TYPE SUPT.	SUPPORT IDENTIFIER	SYS	LOCATION	ELEV.	SERIAL NO.	TEMP °F	SET POINT / MOVEMENT	SCALE READING	PERFORMER INIT/ DATE	VERIFIER INIT/ DATE	COMMENTS
DS	03B-2AFW-R226	003	U-A14	748			CLS 1-1/4” / 1-1/2” (T), 3/16” (C)				
DS	03B-2AFW-R094	003	U-A14	730			CLS 1-1/4” / 1-3/16” (T), 1/8” (C)				
VS	47A427-7-12	003	U-A14	700	N/A		CLS 548# / 0” / -1-9/16” (NOR), +0” / -1-3/4” (MAX)				
DS	47A427-7-1T	003	U-A14	700			CLS 2” / 1/16” (T), 3/16” (C)				
DS	47A427-7-1B	003	U-A14	700			CLS 2” / 1/16” (T), 3/16” (C)				
DS	03B-2AFW-R213T	003	U-A14	700’			CLS 2” / 5/16” (T), 1/16” (C)				
DS	03B-2AFW-R213B	003	U-A14	700’			CLS 2” / 1/16” (T), 1-1/4” (C)				
DS	03B-2AFW-R090N	003	U-A14	699			CLS 2” / 1/16” (T), 1/16 (C)				
DS	03B-2AFW-R090S	003	U-A14	699			CLS 2” / 1/16” (T), 1/16 (C)				
VS	03B-2AFW-V088	003	U-A15	703	N/A		CLS 170# / +.20” / -.01" (NOR), +.20” / -.01” (MAX)				
DS	03B-2AFW-R087	003	U-A15	697			CLS 2-1/2” / 1/16” (T), 3/16” (C)				
VS	03B-2AFW-V070	003	U-A14	693’	N/A		CLS 114# / 0” / -.02” (NOR), +0” / .02” (MAX)				
VS	03B-2AFW-V056	003	U-A14	703	N/A		CLS 1,635# / +1/8” / -1/16” (NOR), +1/8” / -1/16” (MAX)				

Attachment 26
(Page 3 of 3)

DYNAMIC SNUBBERS, VARIABLE SPRINGS AND CONSTANT SPRINGS TDAFP STEAM PIPING DATA

Date _____

(STEP 6.8[2.2]) During 557°F Plateau From Main Steam Loop 1 and Loop 4 Common											
TYPE SUPT.	SUPPORT IDENTIFIER	SYS	LOCATION	ELEV.	SERIAL NO.	TEMP °F	SET POINT / MOVEMENT	SCALE READING	PERFORMER INIT/ DATE	VERIFIER INIT/ DATE	COMMENTS
DS	47A427-7-9	003	U-A14	717			CLS 2-1/2” / 1/8” (T), 7/16” (C)				
DS	47A427-7-11	003	U-A14	722			CLS 2-3/4” / 1/8” (T), 5/16” (C)				
VS	47A427-8-41	003	U-A15	693	N/A		CLS 50# / 0” / .02” (NOR), +.03” / .05” (MAX)				
VS	47A427-8-42	003	U-A15	693	N/A		CLS 30# / 0”				

Attachment 27
(Page 1 of 37)

DYNAMIC SNUBBERS, VARIABLE SPRINGS AND CONSTANT SPRINGS RETURN TO AMBIENT <105°F DATA

Date _____

COLD LOAD SETTING (CLS) INCREMENT (INC)

TYPE SUPT.	SUPPORT IDENTIFIER	SYS	LOCATION	ELEV	SERIAL NO.	TEMP °F	SET POINT / MOVEMENT	SCALE READING	PERFORMER INIT/ DATE	VERIFIER INIT/ DATE	COMMENTS
DS	2-01A-301	001	AZ4	773			CLS 3"/ 1-13/16" (T), 0" (C)				
CS	2-01A-302N	001	AZ5	767	N/A		CLS 8.75 INC / +2.35, - 0 INC				
CS	2-01A-302S	001	AZ5	767	N/A		CLS 8.75 INC / +2.35, - 0 INC				
DS	2-01A-303N	001	AZ4	761			CLS 3" / .011" (T), 2.365" (C)				
DS	2-01A-303S	001	AZ4	761			CLS 5-1/2" / .011" (T), 2.365" (C)				
DS	2-01A-304E	001	SOUTH VLV RM	733			CLS 1-1/2" / 11/16" (T), 13/16" (C)				
DS	2-01A-304W	001	SOUTH VLV RM	733			CLS 1-1/2" / 11/16" (T), 13/16" (C)				
VS	2-01A-305	001	AZ4	737	N/A		CLS 13,973# / 1.94" UP (NOR), 2.09" UP (MAX)				
DS	2-01A-307N	001	AZ5	703			CLS 3-5/8" / 3/8" (T), 0" (C)				
DS	2-01A-307S	001	AZ5	703			CLS 3-3/8" / 3/8" (T), 0" (C)				
DS	2-01A-308	001	SOUTH VLV RM	737			CLS 3" / .22" (T), .28" (C)				
VS	2-01A-309	001	SOUTH VLV RM	740	N/A		CLS 27,083# / +.005" / -.17" (NOR), +.23" / -.18" (MAX)				
DS	2-01A-312	001	SOUTH VLV RM	742			CLS 2-1/2" / 0" (T), 3/8" (C)				
DS	2-01A-313	001	J-R6 S VLV RM				CLS 3-1/8" / 15/16" (T), 1/8" (C)				
DS	2-01A-317	001	SOUTH VLV RM	769			CLS 2-1/2" / 7/8" (T), 1/8" (C)				
DS	2-01A-340	001	AZ160	771			CLS 3-3/8" / 1/16" (T), 11/16" (C)				
CS	2-01A-342N	001	AZ176	767	N/A		CLS 7.5 INC / +1.83" / -.08"				
CS	2-01A-342S	001	AZ176	767	N/A		CLS 7.5 INC / +1.83" / -.08"				
DS	2-01A-343N	001	AZ175	761			CLS 3-1/2" / 4.03" (T), 1.61" (C)				
DS	2-01A-343S	001	AZ175	761			CLS 3-1/2" / 4.03" (T), 1.61" (C)				

Attachment 27
(Page 2 of 37)

DYNAMIC SNUBBERS, VARIABLE SPRINGS AND CONSTANT SPRINGS RETURN TO AMBIENT <105°F DATA

Date _____

TYPE SUPT.	SUPPORT IDENTIFIER	SYS	LOCATION	ELEV	SERIAL NO.	TEMP °F	SET POINT / MOVEMENT	SCALE READING	PERFORMER INIT/ DATE	VERIFIER INIT/ DATE	COMMENTS
VS	2-01A-344	001	AZ171	744	N/A		CLS 13,438# / +0" / -1/8" (NOR), +0" / -1/8" (MAX)				
DS	2-01A-348	001	NORTH VLV RM	737			CLS 3.35" / .03" (T), .73" (C)				
DS	2-01A-349	001	NORTH VLV RM	741			CLS 1" / .11" (T), .005" (C)				
DS	2-01A-350	001	NORTH VLV RM	755			CLS 3" / 1.12" (T), .05" (C)				
DS	2-01A-355	001	NORTH VLV RM	769			CLS 2-1/2" / .81" (T), .05" (C)				
DS	2-01A-380	001	AZ196	770			CLS 3-3/4" / 1/16" (T), 3/4" (C)				
DS	2-01A-381	001	AZ183	722			CLS 2-1/2" / 15/16" (T), 1/16" (C)				
CS	2-01A-382N	001	AZ182	770	N/A		CLS 7.5 INC / +1.93" / -.06"				
CS	2-01A-382S	001	AZ182	770	N/A		CLS 7.5 INC / +1.93" / -.06"				
DS	2-01A-383N	001	AZ183	759			CLS 3-1/2" / .03" (T),1.42" (C)				
DS	2-01A-383S	001	AZ183	759			CLS 2-1/2" / .03" (T), 1.42" (C)				
VS	2-01A-384E	001	AZ184	738	N/A		CLS 7,179# / +1/4" / -1/16" (NOR), +3/8" / -1/16" (MAX)				
VS	2-01A-384W	001	AZ184	738	N/A		CLS 7,179# / +1/4" / -1/16" (NOR), +3/8" / -1/16" (MAX)				
VS	2-01A-386	001	NORTH VLV RM	737	N/A		CLS 21,001 / +.04" / -.82" (NOR), +1.5" / -.82" (MAX)				
DS	2-01A-387	001	NORTH VLV RM	737			CLS 3" / .06" (T), 1.33" (C)				
DS	2-01A-389N	001	NORTH VLV RM	734			CLS 3.69" / .66" (T), 1.11" (C)				
DS	2-01A-389S	001	NORTH VLV RM	734			CLS 3.69" / .66" (T), 1.11" (C)				
VS	2-01A-389N	001	NORTH VLV RM	737	N/A		CLS 17,572# / +.03" / -.61" (NOR), +1.12" / -.61" (MAX)				
VS	2-01A-389S	001	NORTH VLV RM	737	N/A		CLS 12,131# / +.03" / -.61" (NOR), +1.12" / -.61" (MAX)				
DS	2-01A-391	001	NORTH VLV RM	741			CLS 2" / 7/32" (T), 1/32" (C)				

Attachment 27
(Page 3 of 37)

DYNAMIC SNUBBERS, VARIABLE SPRINGS AND CONSTANT SPRINGS RETURN TO AMBIENT <105°F DATA

Date _____

TYPE SUPT.	SUPPORT IDENTIFIER	SYS	LOCATION	ELEV	SERIAL NO.	TEMP °F	SET POINT / MOVEMENT	SCALE READING	PERFORMER INIT/ DATE	VERIFIER INIT/ DATE	COMMENTS
DS	2-01A-392	001	NORTH VLV RM	756			CLS 3-3/4” / 1-5/8” (T), 1/16” (C)				
DS	2-01A-397	001	NORTH VLV RM	769			CLS 2-1/2” / .08” (T), 1.81” (C)				
CS	2-01A-422N	001	AZ357	767	N/A		CLS 9 INC / +1.86” / -.05”				
CS	2-01A-422S	001	AZ357	767	N/A		CLS 9 INC / +1.86” / -.05”				
DS	2-01A-423N	001	AZ357	760			CLS 3-3/4” / 1/16” (T), 1-1/2” (C)				
DS	2-01A-423S	001	AZ357	760			CLS 3-3/4” / 1/16” (T), 1-1/2” (C)				
DS	2-01A-424	001	AZ357	745			CLS 3” / 13/16” (T), 1/16” (C)				
VS	2-01A-425E	001	AZ356	737	N/A		CLS 6,685# / +.15” (NOR), +.38” / -.07” (MAX)				
VS	2-01A-425W	001	AZ356	737	N/A		CLS 6,685# / +.15” (NOR), +.38” / -.07” (MAX)				
VS	2-01A-427	001	SOUTH VLV RM	753	N/A		CLS 17,875# / +.04” / -.79” (NOR), +.85” / -.17” (MAX)				
DS	2-01A-428	001	SOUTH VLV RM	737			CLS 3-1/8” / 7/16” (T), 0” (C)				
DS	2-01A-429N	001	SOUTH VLV RM	732			CLS 3-3/4” / 1/16” (T), 3/16” (C)				
DS	2-01A-429S	001	SOUTH VLV RM	732			CLS 3-3/4” / 1/16” (T), 3/16” (C)				
VS	2-01A-431	001	SOUTH VLV RM	737	N/A		CLS 23,297# / +1/32” / -3/8” (NOR), +1/32” / -3/8” (MAX)				
DS	2-01A-435	001	SOUTH VLV RM	755			CLS 3-7/16" / .06" (T), 1.28" (C)				
DS	2-01A-439	001	SOUTH VLV RM	769			CLS 2-1/2" / 1/16" (T), 1-7/16" (C)				
DS	47A400-16	001	T-T16	737			CLS 11.5” / 0” (T), 11” (C)				
DS	47A400-17	001	N-T16	732			CLS 3” / 8-1/2” (T), 0” (C)				
DS	47A400-18	001	K-T14	722			CLS 3” / 5/16” (T), 0” (C)				
DS	47A400-19	001	K-T13	722			CLS 5” / 0” (T), 3-5/8” (C)				
DS	47A400-20	001	J-T13	718			CLS 4” / 0” (T), 1-5/8” (C)				
DS	47A400-21	001	K-T13	722			CLS 1” / 3-9/16” (T), 0” (C)				

Attachment 27
(Page 4 of 37)

DYNAMIC SNUBBERS, VARIABLE SPRINGS AND CONSTANT SPRINGS RETURN TO AMBIENT <105°F DATA

Date _____

TYPE SUPT.	SUPPORT IDENTIFIER	SYS	LOCATION	ELEV	SERIAL NO.	TEMP °F	SET POINT / MOVEMENT	SCALE READING	PERFORMER INIT/ DATE	VERIFIER INIT/ DATE	COMMENTS
DS	47A400-22T	001	K-T13	722			CLS 4-1/4” / 0” (T), 2” (C)				
DS	47A400-22B	001	K-T13	722			CLS 3-1/4” / 0” (T), 2” (C)				
DS	47A400-23	001	N-T16	732			CLS 1-5/8” / 8-13/16” (T), 0” (C)				
DS	47A400-24T	001	T-T16	737			CLS 1-1/8” / 10-1/4” (T), 0” (C)				
DS	47A400-24B	001	T-T16	737			CLS 1-1/8” / 10-1/4” (T), 0” (C)				
DS	47A400-25T	001	M-T15	723			CLS 9/16” / 4-13/16” (T), 0” (C)				
DS	47A400-25B	001	M-T15	723			CLS 9/16” / 4-13/16” (T), 0” (C)				
DS	47A400-26	001	J-T12	718			CLS 3-1/2” / 0” (T), 1-1/2” (C)				
DS	47A400-27	001	M-T15	722			CLS 1/2” / 4-13/16” (T), 0” (C)				
DS	47A400-28	001	J-T12	726			CLS 2-1/2”” / 15/16” (T), 0” (C)				
DS	47A400-29	001	J-T12	726			CLS 2” / 1” (T), 0” (C)				
DS	47A400-30T	001	J-T10	718			CLS 4” / 0” (T), 1-13/16+” (C)				
DS	47A400-30B	001	J-T10	718			CLS 4” / 0” (T), 1-13/16” (C)				
CS	01A-2MS-V007N	001	M-T15	727	N/A		CLS 6,238# / 1-3/8” (DOWN)				
CS	01A-2MS-V007S	001	M-T15	727	N/A		CLS 6,238# / 1-3/8” (DOWN)				
CS	01A-2MS-V008N	001	M-T14	727	N/A		CLS 6,960# / 1-7/8” (DOWN)				
CS	01A-2MS-V008S	001	M-T14	727	N/A		CLS 6,960# / 1-7/8” (DOWN)				
CS	01A-2MS-V009N	001	M-T13	727	N/A		CLS 7,242# / 2-1/2” (DOWN)				
CS	01A-2MS-V009S	001	M-T13	727	N/A		CLS 7,242# / 2-1/2” (DOWN)				
CS	01A-2MS-V010E	001	K-T12	727	N/A		CLS 7,135# / 2-5/8” (DOWN)				
CS	01A-2MS-V010W	001	K-T12	727	N/A		CLS 7,135# / 2-5/8” (DOWN)				
VS	01A-2MS-V011E	001	K-T12	725	N/A		CLS 4,615# / 2-9/16” (DOWN)				
VS	01A-2MS-V011W	001	K-T12	725	N/A		CLS 4,615# / 2-9/16” (DOWN)				
VS	01A-2MS-V012E	001	J-T12	725	N/A		CLS 4,781# / 2-1/2” (DOWN)				
VS	01A-2MS-V012W	001	J-T12	725	N/A		CLS 4,781# / 2-1/2” (DOWN)				

Attachment 27
(Page 5 of 37)

DYNAMIC SNUBBERS, VARIABLE SPRINGS AND CONSTANT SPRINGS RETURN TO AMBIENT <105°F DATA

Date _____

TYPE SUPT.	SUPPORT IDENTIFIER	SYS	LOCATION	ELEV	SERIAL NO.	TEMP °F	SET POINT / MOVEMENT	SCALE READING	PERFORMER INIT/ DATE	VERIFIER INIT/ DATE	COMMENTS
CS	01A-2MS-V027E	001	M-T16	727	N/A		CLS 6,580# / 1-1/16” (DOWN)				
CS	01A-2MS-V027W	001	M-T16	727	N/A		CLS 6,580# / 1-1/16” (DOWN)				
CS	01A-2MS-V028N	001	K-T15	727	N/A		CLS 6,271# / 1-13/16” (DOWN)				
CS	01A-2MS-V028S	001	K-T15	727	N/A		CLS 6,271# / 1-13/16” (DOWN)				
CS	01A-2MS-V029N	001	K-T14	727	N/A		CLS 5,073# / 2-9/16” (DOWN)				
CS	01A-2MS-V029S	001	K-T14	727	N/A		CLS 5,073# / 2-9/16” (DOWN)				
CS	01A-2MS-V030N	001	K-T13	727	N/A		CLS 4,894# / 2-15/16” (DOWN)				
CS	01A-2MS-V030S	001	K-T13	727	N/A		CLS 4,894# / 2-15/16” (DOWN)				
CS	01A-2MS-V031E	001	K-T13	727	N/A		CLS 6,730# / 3” (DOWN)				
CS	01A-2MS-V031W	001	K-T13	727	N/A		CLS 6,730# / 3” (DOWN)				
VS	01A-2MS-V032E	001	J-T13	725	N/A		CLS 7,171 / 2-5/8” (DOWN)				
VS	01A-2MS-V032W	001	J-T13	725	N/A		CLS 7,171 / 2-5/8” (DOWN)				
CS	01A-2MS-V047E	001	M-T16	727	N/A		CLS 7,785# / 1-3/16” (DOWN)				
CS	01A-2MS-V047W	001	M-T16	727	N/A		CLS 7,785# / 1-3/16” (DOWN)				
CS	01A-2MS-V048N	001	K-T15	727	N/A		CLS 7,400# / 2-1/16” (DOWN)				
CS	01A-2MS-V048S	001	K-T15	727	N/A		CLS 7,400# / 2-1/16” (DOWN)				
CS	01A-2MS-V049N	001	K-T14	727	N/A		CLS 4,309# / 2-1/16” (DOWN)				
CS	01A-2MS-V049S	001	K-T14	727	N/A		CLS 4,309# / 2-1/16” (DOWN)				
CS	01A-2MS-V050N	001	K-T14	727	N/A		CLS 3,710# / 3” (DOWN)				
CS	01A-2MS-V050S	001	K-T14	727	N/A		CLS 3,710# / 3” (DOWN)				
CS	01A-2MS-V051E	001	K-T13	727	N/A		CLS 6,181# / 3-1/16” (DOWN)				
CS	01A-2MS-V051W	001	K-T13	727	N/A		CLS 6,181# / 3-1/16” (DOWN)				
VS	01A-2MS-V052E	001	J-T13	725	N/A		CLS 5,396# / 2-5/8” (DOWN)				
VS	01A-2MS-V052W	001	J-T13	725	N/A		CLS 5,396# / 2-5/8” (DOWN)				
CS	01A-2MS-V059N	001	M-T15	727	N/A		CLS 6,363# / 1-1/8” (DOWN)				

Attachment 27
(Page 6 of 37)

DYNAMIC SNUBBERS, VARIABLE SPRINGS AND CONSTANT SPRINGS RETURN TO AMBIENT <105°F DATA

Date _____

TYPE SUPT.	SUPPORT IDENTIFIER	SYS	LOCATION	ELEV	SERIAL NO.	TEMP °F	SET POINT / MOVEMENT	SCALE READING	PERFORMER INIT/ DATE	VERIFIER INIT/ DATE	COMMENTS
CS	01A-2MS-V059S	001	M-T15	727	N/A		CLS 6,363# / 1-1/8” (DOWN)				
CS	01A-2MS-V060N	001	M-T14	727	N/A		CLS 6,775# / 1-3/4” (DOWN)				
CS	01A-2MS-V060S	001	M-T14	727	N/A		CLS 6,775# / 1-3/4” (DOWN)				
CS	01A-2MS-V061N	001	M-T12	727	N/A		CLS 8,158# / 2-3/16” (DOWN)				
CS	01A-2MS-V061S	001	M-T12	727	N/A		CLS 8,158# / 2-3/16” (DOWN)				
CS	01A-2MS-V062E	001	M-T12	727	N/A		CLS 9,549# / 2-7/16” (DOWN)				
CS	01A-2MS-V062N	001	M-T12	727	N/A		CLS 9,549# / 2-7/16” (DOWN)				
VS	01A-2MS-V063E	001	K-T12	725	N/A		CLS 5,731# / 2-1/2” (DOWN)				
VS	01A-2MS-V063W	001	K-T12	725	N/A		CLS 5,731# / 2-1/2” (DOWN)				
VS	01A-2MS-V064E	001	J-T12	725	N/A		CLS 2,676# / 2-3/8” (DOWN)				
VS	01A-2MS-V064W	001	J-T12	725	N/A		CLS 2,676# / 2-3/8” (DOWN)				
VS	01A-2MS-V065	001	J-T13	727	N/A		CLS 22,564# / 2-5/8” (DOWN)				
VS	01A-2MS-V066	001	J-T12	727	N/A		CLS 28,401# / 2-5/8” (DOWN)				
VS	01A-2MS-V067	001	J-T11	727	N/A		CLS 9,925# / 2-1/4” (DOWN)				
VS	01A-2MS-V068	001	J-T10	727	N/A		CLS 8,977# / 2” (DOWN)				
VS	01A-2MS-V069	001	H-T10	727	N/A		CLS 9,104# / 1-1/2” (DOWN)				
VS	01A-2MS-V070	001	H-T10	753	N/A		CLS 11,165# / 1” (DOWN)				
VS	01A-2MS-V071	001	H-T10	753	N/A		CLS 16,404# / 1/2” (DOWN)				
VS	01A-2MS-V072	001	G-T10	753	N/A		CLS 8,860 / 3/32” (UP)				
VS	01A-2MS-V073	001	F-T10	753	N/A		CLS 8,336# / 1/2” (UP)				
VS	01A-2MS-V074	001	F-T10	753	N/A		CLS 2,317# / 3/4” (UP)				
VS	01A-2MS-V075	001	F-T10	721	N/A		CLS 1,660# / 7/16” (UP)				
VS	01A-2MS-V075	001	F-T10	721	N/A		CLS 1,660# / 7/16” (UP)				
VS	01A-2MS-V076	001	F-T11	725	N/A		CLS 1,792# / 3/16” (UP)				
VS	01A-2MS-V077	001	F-T10	720	N/A		CLS 1,609# / 5/16” (UP)				

Attachment 27
(Page 7 of 37)

DYNAMIC SNUBBERS, VARIABLE SPRINGS AND CONSTANT SPRINGS RETURN TO AMBIENT <105°F DATA

Date _____

TYPE SUPT.	SUPPORT IDENTIFIER	SYS	LOCATION	ELEV	SERIAL NO.	TEMP °F	SET POINT / MOVEMENT	SCALE READING	PERFORMER INIT/ DATE	VERIFIER INIT/ DATE	COMMENTS
VS	01A-2MS-V077	001	F-T10	720	N/A		CLS 1,609# / 5/16” (UP)				
VS	01A-2MS-V078	001	F-T11	725	N/A		CLS 1,880# / 5/16” (UP)				
VS	01A-2MS-V079	001	G-T10	721	N/A		CLS 1,565# / 1/4” (UP)				
VS	01A-2MS-V079	001	G-T10	721	N/A		CLS 1,565# / 1/4” (UP)				
VS	01A-2MS-V080	001	G-T11	725	N/A		CLS 1,805# / 3/16” (UP)				
VS	01A-2MS-V081	001	G-T10	721	N/A		CLS 1,500# / 1/8” (UP)				
VS	01A-2MS-V081	001	G-T10	721	N/A		CLS 1,500# / 1/8” (UP)				
VS	01A-2MS-V082	001	G-T11	725	N/A		CLS 1,810# / 3/16” (UP)				
VS	01A-2MS-V083	001	G-T10	721	N/A		CLS 1,426# / 1/4” (DN)				
VS	01A-2MS-V083	001	G-T10	721	N/A		CLS 1,426# / 1/4” (DN)				
VS	01A-2MS-V084	001	G-T11	724	N/A		CLS 1,719# / 3/16” (UP)				
VS	01A-2MS-V085	001	G-T10	721	N/A		CLS 1,290# / 3/8” (DN)				
VS	01A-2MS-V085	001	G-T10	721	N/A		CLS 1,290# / 3/8” (DN)				
VS	01A-2MS-V086	001	G-T11	727	N/A		CLS 1,928# / 3/16” (UP)				
VS	01A-2MS-V087	001	G-T10	721	N/A		CLS 1,290# / 3/8” (DN)				
VS	01A-2MS-V087	001	G-T10	721	N/A		CLS 1,290# / 3/8” (DN)				
VS	01A-2MS-V088	001	G-T11	727	N/A		CLS 1,933# / 3/16” (UP)				
VS	01A-2MS-V089	001	G-T10	721	N/A		CLS 1,261# / 3/8” (DN)				
VS	01A-2MS-V089	001	G-T10	721	N/A		CLS 1,261# / 3/8” (DN)				
VS	01A-2MS-V090	001	G-T11	724	N/A		CLS 1,733# / 3/16” (UP)				
VS	01A-2MS-V091	001	H-T10	721	N/A		CLS 1,263# / 1/2” (DN)				
VS	01A-2MS-V091	001	H-T10	721	N/A		CLS 1,263# / 1/2” (DN)				
VS	01A-2MS-V092	001	H-T11	724	N/A		CLS 1,710# / 3/16” (UP)				
VS	01A-2MS-V093	001	H-T10	721	N/A		CLS 1,081# / 5/8” (DN)				
VS	01A-2MS-V093	001	H-T10	721	N/A		CLS 1,081# / 5/8” (DN)				

Attachment 27
(Page 8 of 37)

DYNAMIC SNUBBERS, VARIABLE SPRINGS AND CONSTANT SPRINGS RETURN TO AMBIENT <105°F DATA

Date _____

TYPE SUPT.	SUPPORT IDENTIFIER	SYS	LOCATION	ELEV	SERIAL NO.	TEMP °F	SET POINT / MOVEMENT	SCALE READING	PERFORMER INIT/ DATE	VERIFIER INIT/ DATE	COMMENTS
VS	01A-2MS-V094	001	H-T11	727	N/A		CLS 2,135# / 3/16” (UP)				
VS	01A-2MS-V095	001	H-T10	721	N/A		CLS 1,196# / 3/4” (DN)				
VS	01A-2MS-V095	001	H-T10	721	N/A		CLS 1,196# / 3/4” (DN)				
VS	01A-2MS-V096	001	H-T11	727	N/A		CLS 2,140# / 3/16” (DN)				
VS	01A-2MS-V097	001	H-T10	720	N/A		CLS 1,187# / 7/8” (DN)				
VS	01A-2MS-V097	001	H-T10	720	N/A		CLS 1,187# / 7/8” (DN)				
VS	01A-2MS-V098	001	H-T11	724	N/A		CLS 1,717# / 3/16” (UP)				

Attachment 27
(Page 9 of 37)

DYNAMIC SNUBBERS, VARIABLE SPRINGS AND CONSTANT SPRINGS RETURN TO AMBIENT <105°F DATA

Date _____

TYPE SUPT	SUPPORT IDENTIFIER	SYS	LOCATION	ELEV	SERIAL NO.	TEMP °F	SET POINT / MOVEMENT	SCALE READING	PERFORMER INIT/ DATE	VERIFIER INIT/ DATE	COMMENTS
(STEP 6.9[2.2]) During Performance of 2-PTI-003A-03											
Main Feedwater Line to Steam Generator #1											
DS	2-03A-205	003	U-A15	731			CLS 2-5/16” / 1-7/16” (T), 0 (C)				
Main Feedwater Line to Steam Generator #2											
DS	2-03A-244	003	AZ172	731			CLS 3-1/2” / 1-1/4” (T), 1/4” (C)				
DS	2-03A-248	003	AZ165	731			CLS 4” / 1/16” (T), 1-1/8” (C)				
Main Feedwater Line to Steam Generator #3											
DS	2-03A-285	003	CRANE WALL AZ188	731			CLS 2-1/2” / 2” (T), 0” (C)				
DS	2-03A-289	003	AZ185	731			CLS 5” / 0 (T), 3-15/16” (C)				
Main Feedwater Line to Steam Generator #4											
DS	2-03A-320	003	CRANE WALL AZ352	729			CLS 3” / 0” (T), 2-3/16” (C)				
DS	2-03A-321	003	CRANE WALL AZ352	731			CLS 3” / 7/8” (T), 1/16” (C)				
DS	2-03A-323	003	U-A14	731			CLS 2-3/16” / 1-5/8” (T), 0” (C)				
DS	2-03A-328	003	U-A15	731			CLS 3” / 3” (T), 0” (C)				

Attachment 27
(Page 10 of 37)

DYNAMIC SNUBBERS, VARIABLE SPRINGS AND CONSTANT SPRINGS RETURN TO AMBIENT <105°F DATA

Date _____

TYPE SUPT	SUPPORT IDENTIFIER	SYS	LOCATION	ELEV	SERIAL NO.	TEMP °F	SET POINT / MOVEMENT	SCALE READING	PERFORMER INIT/ DATE	VERIFIER INIT/ DATE	COMMENTS
(STEP 6.9[2.3]) During Performance of 2-PTI-003A-03											
Main Feedwater Bypass Line to Steam Generator #1											
DS	2-03A-369	003	AZ35	759			CLS 3-1/8” / 0” (T), 1-1/16” (C)				
DS	2-03A-370	003	AZ35	759			CLS 3.075” / . 72” (T), 1.149” (C)				
DS	2-03A-374E	003	S VLV RM U-6	730			CLS 1-11/16” / .63” (T), .04” (C)				
DS	2-03A-374W	003	S VLV RM U-6	730			CLS 1-11/16” / .63” (T), .04” (C)				
DS	2-03A-377	003	S VLV RM U-A15	730			CLS 2-1/4” / .03” (T), .57” (C)				
VS	2-03A-377	003	S VLV RM U-A15	730	N/A		CLS 2,431 / +.04” / -.55” (NOR), +.11” /- .62” (MAX)				
VS	2-03A-378	003	AZ35	759	N/A		CLS 1-11/16”” / .632” (T), .04” (C)				
Main Feedwater Bypass Line to Steam Generator #2											
VS	2-03A-408	003	AZ160	759	N/A		CLS 913 / 1” (UP)				
DS	2-03A-411	003	AZ120	759			CLS 3-7/16” / 0” (T), 13/16” (C)				
DS	2-03A-423	003	N VLV RM AB X-6	735			CLS 3-1/4” / .05” (T), .81” (C)				
DS	2-03A-426	003	N VLV RM AB A-8	730			CLS 3” ±1/4” / .08” (T), .16” (C)				
DS	47A401-8-20T	003	AZ163	758			CLS 2” / 1/16” (T), 9/16” (C)				
DS	47A401-8-20B	003	AZ163	758			CLS 2” / 1/16” (T), 9/16” (C)				

Attachment 27
(Page 11 of 37)

DYNAMIC SNUBBERS, VARIABLE SPRINGS AND CONSTANT SPRINGS RETURN TO AMBIENT <105°F DATA

Date _____

TYPE SUPT	SUPPORT IDENTIFIER	SYS	LOCATION	ELEV	SERIAL NO.	TEMP °F	SET POINT / MOVEMENT	SCALE READING	PERFORMER INIT/ DATE	VERIFIER INIT/ DATE	COMMENTS
(STEP 6.9[2.3]) During Performance of 2-PTI-003A-03											
Main Feedwater Bypass Line to Steam Generator #3											
DS	2-03A-455	003	AZ199	759			CLS 3-1/2” / 0” (T), 1-3/16” (C)				
DS	2-03A-468	003	AZ182	730			CLS 2-1/2” / 11/16” (T), 0” (C)				
VS	2-47A401-8-28	003	AZ210	759	N/A		CLS 988 / +1-5/16” / 0” (NOR), 1-15/16” / -5/8” (MAX)				
DS	2-47A401-8-29T	003	AZ210	759			CLS 2-1/2” / 1-1/16” (T), 1/16” (C)				
DS	2-47A401-8-29B	003	AZ210	759			CLS 2-1/2” / 1-1/16” (T), 1/16” (C)				
Main Feedwater Bypass Line to Steam Generator #4											
DS	2-03A-480	003	AZ350	761			CLS 4-1/4” / 1/8” (T), 1-9/16” (C)				
VS	2-03A-481	003	AZ350	759	N/A		CLS 397# / +1” / -1/16” (NOR), +1” / -1/16” (MAX)				
DS	2-03A-482T	003	AZ350	759			CLS 2-1/4” / 9/16” (T), 0” (C)				
DS	2-03A-482B	003	AZ350	759			CLS 2-1/4” / 9/16” (T), 0” (C)				
DS	2-03A-483	003	AZ280	759			CLS 3-5/8” / 1/16” (T), 1-1/8” (C)				
DS	2-03A-485	003	AZ350	759			CLS 2-1/2” / .16” (T), .59” (C)				
DS	2-03A-497	003	S VLV RM AZ6	730			CLS 3-1/8” / 1/4” (T), 1/32” (C)				
DS	2-03A-503	003	S VLV RM AZ18	739			CLS 2-1/2” / 1/8” (T), 1/16” (C)				
DS	47A401-8-21E	003	AZ351	739			CLS 2-11/16” / 5/16” (T), 11/16” (C)				

Attachment 27
(Page 12 of 37)

DYNAMIC SNUBBERS, VARIABLE SPRINGS AND CONSTANT SPRINGS RETURN TO AMBIENT <105°F DATA

Date _____

TYPE SUPT	SUPPORT IDENTIFIER	SYS	LOCATION	ELEV	SERIAL NO.	TEMP °F	SET POINT / MOVEMENT	SCALE READING	PERFORMER INIT/ DATE	VERIFIER INIT/ DATE	COMMENTS
DS	47A401-8-21W	003	AZ351	739			CLS 2-11/16” / 5/16” (T), 11/16” (C)				
DS	2-47A427-3-57T	003	AZ331	759			CLS 1-7/8” / 0” (T), 5/8” (C)				
DS	2-47A427-3-57B	003	AZ331	759			CLS 1-7/8” / 0” (T), 5/8” (C)				

Attachment 27
(Page 13 of 37)

DYNAMIC SNUBBERS, VARIABLE SPRINGS AND CONSTANT SPRINGS RETURN TO AMBIENT <105°F DATA

Date _____

TYPE SUPT	SUPPORT IDENTIFIER	SYS	LOCATION	ELEV	SERIAL NO.	TEMP °F	SET POINT / MOVEMENT	SCALE READING	PERFORMER INIT/ DATE	VERIFIER INIT/ DATE	COMMENTS
(STEP 6.9[2.4]) During Performance of 2-PTI-003A-03											
Main Feedwater Warm Up Line for Steam Generator #1											
DS	2-03A-527	003	S VLV RM A6-M	730			CLS 7/16” / 1-5/16”” (T), -1/16” (C)				
Main Feedwater Warm Up Line for Steam Generator #3											
DS	2-03A-563	003	N VLV RM 6-A	730			CLS 4-5/8” / 1/8” (T), 4-3/16” (C)				
Main Feedwater Warm Up Line for Steam Generator #4											
DS	2-03A-582	003	S VLV RM AZ350	730			CLS 5-1/8” / 0” (T), 4-1/16” (C)				
DS	2-03A-584	003	S VLV RM 6-M	730			CLS 3” / .06” (T), 1.99” (C)				
DS	2-47A401-9-15	003	S VLV RM AZ350	730			CLS 3” / 1/16”” (T), 1-13/16” (C)				

Attachment 27
(Page 14 of 37)

DYNAMIC SNUBBERS, VARIABLE SPRINGS AND CONSTANT SPRINGS RETURN TO AMBIENT <105°F DATA

Date _____

TYPE SUPT	SUPPORT IDENTIFIER	SYS	LOCATION	ELEV	SERIAL NO.	TEMP °F	SET POINT / MOVEMENT	SCALE READING	PERFORMER INIT/ DATE	VERIFIER INIT/ DATE	COMMENTS
(STEP 6.9[2.5]) During Performance of 2-PTI-003B-05 Section 6.10 (TD) and Section 6.14 (MD)											
Auxiliary Feedwater From the Motor Driven Auxiliary Feed Pump 2A-A to Steam Generator #1											
VS	03B-2AFW-V047	003	T-A15 AB	702	N/A		CLS 724 /+1/16” UP (NOR), + 1/16” UP (MAX)				
DS	03B-2AFW-R155	003	S VLV RM U-6	746			CLS 1-1/2” / 3/8” (T), 1-7/16” (C)				
Auxiliary Feedwater From the Motor Driven Auxiliary Feed Pump 2A-A to Steam Generator #2											
VS	03B-2AFW-V178N	003	AZ301	750	N/A		CLS 124 / +3/8” / -1/8” (NOR), +13/16” / -9/16” (MAX)				
VS	03B-2AFW-V178S	003	AZ301	750	N/A		CLS 71 / +3/8” / -1/8” (NOR), +13/16” / -9/16” (MAX)				
VS	2-03B-80	003	AZ301	744	N/A		CLS 282# / 1/4” (UP)				
DS	2-03B-71T	003	AZ143	740			CLS 1-1/2” / .47” (T), .69” (C)				
DS	2-03B-71B	003	AZ143	740			CLS 1-1/2” / .47” (T), .69” (C)				
DS	2-03B-82	003	AZ143	727			CLS 2-1/2” / 0” (T), 1/4” (C)				
VS	2-03B-82	003	AZ143	727	N/A		CLS 612# / +0” / -1/4” (NOR), +0” / -1/4” (MAX)				
DS	2-03A-400	003	AZ144	744			CLS 2” / .67”(T), .0” (C)				
DS	2-03A-401	003	AZ143	744			CLS 2” / .85” (T), 0” (C)				
DS	2-03A-402	003	AZ143	753			CLS 3” / 0” (T), .20” (C)				
DS	2-03A-404	003	AZ144	753			CLS 4-1/2” / 0” (T), .88” (C)				
DS	2-03A-415	003	AZ144	752			CLS 3” / .73” (T), 0” (C)				

Attachment 27
(Page 15 of 37)

DYNAMIC SNUBBERS, VARIABLE SPRINGS AND CONSTANT SPRINGS RETURN TO AMBIENT <105°F DATA

Date _____

TYPE SUPT	SUPPORT IDENTIFIER	SYS	LOCATION	ELEV	SERIAL NO.	TEMP °F	SET POINT / MOVEMENT	SCALE READING	PERFORMER INIT/ DATE	VERIFIER INIT/ DATE	COMMENTS
(STEP 6.9[2.5]) During Performance of 2-PTI-003B-05 Section 6.10 (TD) and Section 6.14 (MD)											
Auxiliary Feedwater From the Motor Driven Auxiliary Feed Pump 2B-B to Steam Generator #3											
DS	2-03B-35	003	AZ301	743			CLS 2” / 5/8” (T), 1/8” (C)				
VS	47A427-6-31	003	AZ301	743	N/A		CLS 343# / +5/8” / -1/8” (NOR), +5/8” / -1/16” (MAX)				
VS	47A427-6-32	003	AZ216	730	N/A		CLS 895# / +1/8” / -9/16” (NOR), +1/16” / -9/16” (MAX)				
DS	2-03B-37	003	AZ215	741			CLS 2” / 1/8” (T), 9/16” (C)				
DS	2-03B-39	003	AZ216	730			CLS 3-1/4” / .39” (T), 0” (C)				
DS	2-03A-445	003	AZ216	753			CLS 2-3/4” / 9/16” (T), 1/16” (C)				
DS	2-03A-449	003	AZ216	754			CLS 2-11/16” / 11/16” (T), 0” (C)				
Auxiliary Feedwater From the Motor Driven Auxiliary Feed Pump 2B-B to Steam Generator #4											
VS	03B-2AFW-V177	003	U-A14 AB	753	N/A		CLS 1,247 / +3/8” / -1/16” (NOR), +3/8” / -1/16” (MAX)				
DS	03B-2AFW-R242	003	U-A14 AB	745			CLS 2-11/16” / 1/16” (T), 3/8” (C)				
DS	03B-2AFW-R171E	003	U-A14 AB	748			CLS 1-1/4” / 1/4” (T), 1/32” (C)				
DS	03B-2AFW-R171W	003	U-A14 AB	748			CLS 1-1/4” / 1/4” (T), 1/32” (C)				

Attachment 27
(Page 16 of 37)

DYNAMIC SNUBBERS, VARIABLE SPRINGS AND CONSTANT SPRINGS RETURN TO AMBIENT <105°F DATA

Date _____

TYPE SUPT	SUPPORT IDENTIFIER	SYS	LOCATION	ELEV	SERIAL NO.	TEMP °F	SET POINT / MOVEMENT	SCALE READING	PERFORMER INIT/ DATE	VERIFIER INIT/ DATE	COMMENTS
VS	2-62A-240	062	AZ110	728	N/A		CLS 813# / +1/16” / -1/16” (NOR), +1/16” / -1/16” (MAX)				
DS	2-62A-247	062	AZ81	704			CLS 4-1/4” / 1/16” (T), 11/16” (C)				
DS	2-62A-250	062	AZ54	709			CLS 1-1/4” / .44” (T), .02” (C)				
VS	2-62A-252	062	AZ54	714	N/A		CLS 510# / +1/6” / -0” (NOR), +1/16” / 0” (MAX)				
DS	2-62A-254	062	AZ50	706			CLS 1-1/8” / 1/16” (T), 1/8” (C)				
DS	2-62A-256N	062	AZ51	704			CLS 2-1/2” / .01” (T), .1” (C)				
DS	2-62A-256S	062	AZ51	704			CLS 2-1/2” / .01” (T), .1” (C)				
DS	2-62A-256V	062	AZ57	704			CLS 2” / .15” (T), .01” (C)				
VS	2-62A-258	062	AZ48	713	N/A		CLS 90# / + 3/16” / -0” (NOR), +3/16” / -0” (MAX)				
DS	2-62A-262	062	AZ47	706			CLS 1-3/16” / 1/8 (T), 1/4” (C)				
VS	2-62A-266	062	AZ46	714	N/A		CLS 60# / 1/64” (NOR), 1/64” (MAX)				
DS	2-62A-269	062	AZ46	706			CLS 2” / 1/16” (T), 1/4” (C)				
DS	2-62A-271E	062	AZ45	704			CLS 1-1/8” / 1/8” (T), 1/16” (C)				
DS	2-62A-271W	062	AZ45	704			CLS 1-1/8” / 1/8” (T), 1/16” (C)				
VS	2-62A-290	062	AZ215	705	N/A		CLS 1,114# / 1.07” (UP)				
DS	2-62A-291	062	AZ215	711			CLS 2-3/4” / 0” (T), 2-1/8” (C)				
DS	2-62A-294	062	AZ215	727			CLS 2-1/6” / 1/2” (T), 5/8” (C)				
DS	2-62A-319	062	AZ128	716			CLS 1” / 1/16” (T), 1/16” (C)				
DS	2-62A-320	062	AZ107	723			CLS 1” / 11/16” (T), 0” (C)				
CS	2-62A-346	062	AZ103	732	N/A		CLS 515# / 2-3/8”(UP)				
DS	2-62A-357	062	AZ343	727			CLS 3/4” / 2-13/16 ” (T), 0” (C)				

Attachment 27
(Page 17 of 37)

DYNAMIC SNUBBERS, VARIABLE SPRINGS AND CONSTANT SPRINGS RETURN TO AMBIENT <105°F DATA

Date _____

TYPE SUPT	SUPPORT IDENTIFIER	SYS	LOCATION	ELEV	SERIAL NO.	TEMP °F	SET POINT / MOVEMENT	SCALE READING	PERFORMER INIT/ DATE	VERIFIER INIT/ DATE	COMMENTS
DS	2-62A-358	062	AZ328	727			CLS 1/2” (+1/4”, -0”) / 3-5/8” (T), 1/16” (C)				
DS	2-62A-360	062	AZ322	727			CLS 3-3/4” / 1/2” (T), 2-7/16” (C)				
DS	2-62A-362	062	AZ322	727			CLS 2.19” / 1/8” (T), 3/8” (C)				
DS	2-62A-363	062	AZ321	726			CLS 1” / 2-1/8” (T), 0” (C)				
DS	2-62A-366	062	AZ318	727			CLS 1-1/8” / 1-13/16” (T), 1/8” (C)				
DS	2-62A-369	062	AZ128	727			CLS 1-7/8” / 0” (T), 1/2” (C)				
DS	2-62A-371	062	AZ128	728			CLS 7/8” / 1/4” (T), 0” (C)				
CS	2-62A-375	062	AZ103	734	N/A		CLS 429# / 3/32” (DOWN)				
DS	2-62A-377	062	AZ95	730			CLS 2-3/4” / 1/8” (T), 1-7/16” (C)				
DS	2-62A-382	062	AZ48	727			CLS 1-1/4” / 1-9/16” (T), 1/8” (C)				
DS	2-62A-463	062	AZ225	723			CLS 1.81” / .01” (T), 1.32” (C)				
VS	2-62A-530	062	AZ45	705	N/A		CLS 568# / +0” / -.03” (NOR), +.02” / -.05” (MAX)				
DS	2-62A-531	062	AZ44	712			CLS 3-1/2” / 1/16” (T), 5/8” (C)				
VS	2-62A-532	062	AZ52	706	N/A		CLS 460# / +1/16” / -1/16” (NOR), +1/16” / -1/16” (MAX)				
DS	2-62A-533	062	AZ50	706			CLS 5/8” / 3/16” (T), 1/16” (C)				
VS	2-62A-535	062	AZ48	705	N/A		CLS 589# / 1/8” (DOWN)				
DS	2-62A-536	062	AZ46	712			CLS 2-1/4” / 1/16” (T), 5/8” (C)				
DS	2-62A-557	062	AZ43	727			CLS 3-3/16” (+1/16”, 3/16”) / 7/16” (T), 2-3/4” (C)				
DS	2-62A-559	062	AZ43	727			CLS 3” / 1/4” (T), 1-1/2” (C)				
DS	2-62A-561	062	AZ43	727			CLS 2” / 15/16” (T), 5/16” (C)				

Attachment 27
(Page 18 of 37)

DYNAMIC SNUBBERS, VARIABLE SPRINGS AND CONSTANT SPRINGS RETURN TO AMBIENT <105°F DATA

Date _____

TYPE SUPT	SUPPORT IDENTIFIER	SYS	LOCATION	ELEV	SERIAL NO.	TEMP °F	SET POINT / MOVEMENT	SCALE READING	PERFORMER INIT/ DATE	VERIFIER INIT/ DATE	COMMENTS
VS	2-62A-562	062	AZ43	727	N/A		CLS 422 / 1/4” (UP)				
DS	2-62A-563	062	AZ43	727			CLS 1-1/2” / 13/16” (T), 0” (C)				
VS	2-62A-584	062	AZ178	730	N/A		CLS 35# / 3/8” (UP)				
DS	2-62A-589	062	AZ150	729			CLS 2-1/2” / .85” (T), .03” (C)				
VS	2-62A-621	062	AZ302	716	N/A		CLS 117/ +.02”/ -.39” (NOR) +.03”/ -.41” (MAX)				
DS	2-62A-624	062	AZ44	706			CLS 2-5/8” / 1/16” (T), 1/16" (C)				
DS	2-62A-625	062	AZ57	706			CLS 1-7/8” / 3/16” (T), 1/16” (C)				
DS	2-62A-630	062	AZ150	729			CLS 2” / 0” (T), 3/4” (C)				
VS	2-62A-637	062	AZ110	719	N/A		CLS 112# / +.09" / -0" (NOR), +.09" / 0" (MAX)				
DS	2-62A-802	062	AZ200	719			CLS 2-1/4” / 1-1/8” (T), 0” (C)				
DS	2-62A-808	062	AZ210	726			CLS 3-1/8” / 1/16” (T), 2-3/16” (C)				
DS	2-62A-809	062	AZ210	725			CLS 3-1/4” / .02” (T), 2.07” (C)				
DS	2-62A-810	062	AZ208	725			CLS 3/4” / 2-3/4” (T), 0” (C)				
DS	2-68-365	062	AZ220	704			CLS 1-1/4” / 2-13/16” (T), 0” (C)				
DS	47A406-12-79N	062	AZ48	706			CLS 2” /1/16” (T), 1/16” (C)				
DS	47A406-12-79S	062	AZ48	706			CLS 2” / 1/16” (T), 1/16” (C)				
DS	47A406-12-79W	062	AZ48	706			CLS 2” / 3/16” (T), 1/8” (C)				
DS	47A406-12-82	062	AZ43	705			CLS 2-1/8” / 1/16” (T), 3/16” (C)				
DS	2-47A406-12-89	062	AZ48	705			CLS 1” / .02” (T), .03” (C)				
DS	2-47A406-12-93N	062	AZ44	712			CLS 2-5/8” / 1/16” (T), 1/4” (C)				
DS	2-47A406-12-93S	062	AZ44	712			CLS 2-5/8” / 1/16” (T), 1/4” (C)				
DS	2-47A406-12-94E	062	AZ44	712			CLS 4-1/8” / 1/16” (T), -3/16” (C)				
DS	2-47A406-12-94W	062	AZ44	712			CLS 4-1/8” / 1/16” (T), -3/16” (C)				

Attachment 27
(Page 19 of 37)

DYNAMIC SNUBBERS, VARIABLE SPRINGS AND CONSTANT SPRINGS RETURN TO AMBIENT <105°F DATA

Date _____

TYPE SUPT	SUPPORT IDENTIFIER	SYS	LOCATION	ELEV	SERIAL NO.	TEMP °F	SET POINT / MOVEMENT	SCALE READING	PERFORMER INIT/ DATE	VERIFIER INIT/ DATE	COMMENTS
DS	2-47A406-12-97T	062	AZ326	712			CLS 4-3/8” / 1/16” (T), 1-3/8 (C)				
DS	2-47A406-12-97B	062	AZ326	712			CLS 4-1/2” / 1/16” (T), 1-3/8” (C)				
DS	2-47A406-12-98N	062	AZ53	712			CLS 2-1/2” /1/10” (T), 1-1/4” (C)				
DS	2-47A406-12-98S	062	AZ53	712			CLS 2-1/2” / 1/10” (T), 1-1/4” (C)				
DS	2-47A406-12-101	062	AZ44	712			CLS 2-7/16” / 1/16” (T), 13/16” (C)				
DS	47A406-13-56	062	AZ216	726			CLS .9” / .74”(T), .02” (C)				
DS	2-47A406-13-106	062	AZ52	727			CLS 2-7/16” / 1/16” (T), 1/8” (C)				
DS	2-47A406-14-67	062	AZ123	720			CLS 2” / 1-1/16” (T), 1/16” (C)				
VS	2-47A406-14-81	062	AZ321	728	N/A		CLS 441# / + 1/4” / -1/16” (NOR), +5/8” / -1/2” (MAX)				
DS	2-47A406-14-84	062	AZ123	726	N/A		CLS 2-1/4” / 3/16” (T), 5/16” (C)				
DS	2-47A406-14-85	062	AZ122	725	N/A		CLS 2-1/4” / 7/8” (T), 0 (C)				
DS	2-47A406-14-86	062	AZ122	725	N/A		CLS 2-1/8” / 1/8” (T), 1/8” (C)				
DS	2-47A406-14-87	062	AZ185	730	N/A		CLS 2” / 1/8” (T), 1/16” (C)				
DS	47A465-3-52	062	AZ53	712			CLS 2-1/2” / 1/32” (T), 1/4” (C)				
DS	2-47A560-38-2	062	AZ220	704			CLS 2-1/8” / 1-7/16” (T), 1/16” (C)				

Attachment 27
(Page 20 of 37)

DYNAMIC SNUBBERS, VARIABLE SPRINGS AND CONSTANT SPRINGS RETURN TO AMBIENT <105°F DATA

Date _____

TYPE SUPT	SUPPORT IDENTIFIER	SYS	LOCATION	ELEV	SERIAL NO.	TEMP °F	SET POINT / MOVEMENT	SCALE READING	PERFORMER INIT/ DATE	VERIFIER INIT/ DATE	COMMENTS
DS	2-63-001	063	AZ42	725			CLS 3-1/2” / 1/16” (T), 15/16” (C)				
VS	2-63-002	063	AZ45	728	N/A		CLS 2,431# / +15/16” / -1/16” (NOR), +11/16” / -3/8” (MAX)				
DS	2-63-005	063	AZ40	728			CLS 2-3/16” / 3/16” (T), 1/16” (C)				
DS	2-63-008	063	AZ31	718			4-1/2” / 3/8” (T), 1/16” (C)				
DS	2-63-011	063	AZ40	726			1-1/8” / 1/16” (T), 1/8” (C)				
VS	2-63-013	063	AZ34	740	N/A		CLS 1,466# / +11/16” / -1/32” (NOR), +11/16” / -1/32” (MAX)				
DS	2-63-014	063	AZ34	738			CLS 2” / 11/16” (T), 1/32” (C)				
VS	2-63-016	063	AZ18	741	N/A		CLS 262# / +1-1/8” / -3/16” (NOR), +1-1/8” / -3/16” (MAX)				
DS	2-63-018	063	AZ21	738			CLS 2” / 1-1/8” (T), 1/16” (C)				
DS	2-63-019	063	AZ16	740			CLS 2-1/2” / 1/8” (T), 1-15/16” (C)				
VS	2-63-020	063	AZ12	740	N/A		CLS 1,375 / +1-9/16” / -1/4” (NOR), +1-7/8” / -1/2” (MAX)				
DS	2-63-022	063	AZ358	740			CLS 4” / 1/4” (T), 2-3/4” (C)				
DS	2-63-023	063	AZ342	736			CLS 1-1/4” / 3/8”(T), 1/16” (C)				
DS	2-63-024	063	AZ342	740			CLS 2-3/4” / 1/8” (T),15/16” (C)				
VS	2-63-026	063	AZ320	741	N/A		CLS 1,332# / +3/4” / -0” (NOR), +13/16” / -1/16” (MAX)				
VS	2-63-028	063	AZ308	741	N/A		CLS 1,868# / 7/8” (UP) (NOR), 7/8”(UP) (MAX)				
DS	2-63-029	063	AZ308	735			CLS 1-1/4” / 7/8” (T), 0” (C)				

Attachment 27
(Page 21 of 37)

DYNAMIC SNUBBERS, VARIABLE SPRINGS AND CONSTANT SPRINGS RETURN TO AMBIENT <105°F DATA

Date _____

TYPE SUPT	SUPPORT IDENTIFIER	SYS	LOCATION	ELEV	SERIAL NO.	TEMP °F	SET POINT / MOVEMENT	SCALE READING	PERFORMER INIT/ DATE	VERIFIER INIT/ DATE	COMMENTS
DS	2-63-030	063	AZ308	738			CLS 3” / 1/4” (T), 1/16” (C)				
DS	2-63-031	063	AZ300	735			CLS 1-1/2” / 7/16” (T), 1/16” (C)				
DS	2-63-032	063	AZ300	734			CLS 2” / 13/16” (T), 1/8” (C)				
DS	2-63-035	063	AZ35	728			CLS 3” / 0” (T), 1” (C)				
DS	2-63-038E	063	AZ35	731			CLS 2-3/4” / 1/4” (T), 1/16” (C)				
DS	2-63-038W	063	AZ35	731			CLS 3-1/4” / 1/4” (T), 1/16” (C)				
DS	2-63-042	063	AZ297	734			CLS 2-3/4” / 1/2” (T), 1/16 (C)				
DS	2-63-043	063	AZ297	734			CLS 2-3/8” / 1/8” (T), 0” (C)				
DS	2-63-055	063	AZ111	741			CLS 3-5/8” / 1/8” (T), 2-1/8” (C)				
DS	2-63-062	063	AZ215	741			CLS 3-1/2” / 1/8” (T), 1-1/2” (C)				
VS	2-63-063	063	AZ218	736	N/A		CLS 2,106# / +13/16” / -0” (NOR), +13/16” / -1/16” (MAX)				
DS	2-63-064	063	AZ218	734			CLS 2-1/4” / 0” (T), 3/4” (C)				
DS	2-63-069	063	AZ215	740			CLS 1-3/8” / 1-7/16” (T), 1/16” (C)				
VS	2-63-070	063	AZ225	729	N/A		CLS 3,860# / +5/16” (UP) / -0” (DN) (NOR), +5/16” (UP) / -0” (DN) (MAX)				
DS	2-63-072	063	AZ218	725			CLS 2-1/2” / 1/16” (T), 1/8” (C)				
DS	2-63-078	063	AZ145	736			CLS 3-3/4” / 1/8”(T), 3/4” (C)				
VS	2-63-080	063	AZ145	729	N/A		CLS 1,520# / +1/32” / -1/2” (NOR), +1/32” / -1/2” (MAX)				
DS	2-63-095N	063	AZ215	727			CLS 1-3/4” / 0” (T), 5/8” (C)				
DS	2-63-095S	063	AZ215	727			CLS 2” / 1/8” (T), 1/16” (C)				

Attachment 27
(Page 22 of 37)

DYNAMIC SNUBBERS, VARIABLE SPRINGS AND CONSTANT SPRINGS RETURN TO AMBIENT <105°F DATA

Date _____

TYPE SUPT	SUPPORT IDENTIFIER	SYS	LOCATION	ELEV	SERIAL NO.	TEMP °F	SET POINT / MOVEMENT	SCALE READING	PERFORMER INIT/ DATE	VERIFIER INIT/ DATE	COMMENTS
DS	2-63-156	063	AZ300	725			CLS 2” / 1/16” (T), 11/16” (C)				
DS	2-63-161	063	AZ300	723			CLS 1-15/16” / 1/16” (T), 5/16” (C)				
DS	2-63-163	063	AZ304	722			CLS 1-1/2” / 1/16”(T), 3/16” (C)				
DS	2-63-164	063	AZ302	722			CLS 2-1/4” / 1/2” (T), 1/8” (C)				
VS	2-63-165	063	AZ302	722	N/A		CLS 66 / +1/4” / 0” (NOR), +5/16” / -1/16” (MAX)				
DS	2-63-169	063	AZ295	732			CLS 1-5/8” / 1/16” (T), 1/16” (C)				
DS	2-63-185	063	AZ42	729			CLS 2-1/2” / 1/16” (T), 1-1/8” (C)				
DS	2-63-285	063	AZ181	730			CLS 1-3/4” / 3/16” (T), 1/16” (C)				
VS	2-63-342	063	AZ188	731	N/A		CLS 2,356# / 3/8” (UP)				
DS	2-63-365	063	AZ37	727			CLS 2-7/8” / 1/16” (T), 3/4” (C)				
VS	2-63-367	063	AZ37	731	N/A		CLS 2,140# / +7/8” / -0” (NOR), +1-3/16” / -1/4” (MAX)				
VS	2-63-451	063	AZ321	725	N/A		CLS 2,900 / +3/8” / -1/16” (NOR), +3/4” / -1/2” (MAX)				
DS	2-63-453	063	AZ324	724			CLS 2-7/8” / 1/16” (T), 3/8” (C)				
DS	2-63-458	063	AZ324	723			CLS 4-1/2” / 11/16” (T), 1/16” (C)				
DS	2-63-459	063	AZ324	718			CLS 2” / 0” (T), 7/8” (C)				
VS	2-63-466E	063	AZ324	730	N/A		CLS 148# / +1/4” / -1/16” (NOR), +1/4” / -1/16” (MAX)				
VS	2-63-466W	063	AZ324	730	N/A		CLS 160# / +1/4” / -1/16” (NOR), +1/4” / -1/16” (MAX)				

Attachment 27
(Page 23 of 37)

DYNAMIC SNUBBERS, VARIABLE SPRINGS AND CONSTANT SPRINGS RETURN TO AMBIENT <105°F DATA

Date _____

TYPE SUPT	SUPPORT IDENTIFIER	SYS	LOCATION	ELEV	SERIAL NO.	TEMP °F	SET POINT / MOVEMENT	SCALE READING	PERFORMER INIT/ DATE	VERIFIER INIT/ DATE	COMMENTS
DS	2-63-520	063	AZ45	723			CLS 1-3/4” / 1-1/16” (T), 1/16” (C)				
DS	2-63-526	063	AZ45	725			CLS 3-1/16” / 5/8” (T), 1/8” (C)				
DS	2-63-528	063	AZ293	733			CLS 1” / 1/16” (T), 1/16” (C)				
DS	2-63-571	063	AZ150	729			CLS 7/8” / 9/16" (T), 1/16" (C)				
DS	2-63-573	063	AZ181	730			CLS 1-1/2” / 1/16” (T), 1/4” (C)				
DS	2-63-584	063	AZ39	732			CLS 1-5/16” / 1-1/2” (T), 1/16” (C)				
VS	2-63-588	063	AZ142	731	N/A		CLS 1,988 / -1/8” (EXT)				
DS	2-63-592	063	AZ344	741			CLS 1-1/2” / 2-5/16” (T), 1/2” (C)				
DS	47A432-1-8T	063	U-A12	688			CLS 3-7/16” / 1/8” (T), 7/8” (C)				
DS	47A432-1-8B	063	U-A12	688			CLS 3-7/16” / 1/8” (T), 7/8” (C)				
DS	47A432-3-6	063	AZ37	728			CLS 2-3/4” / 1/8” (T), 3/8” (C)				
DS	47A432-3-8	063	AZ142	727			CLS 3” / 0” (T), 3/8” (C)				
DS	2-47A432-3-13	063	AZ35	737			CLS 2-1/2” / 3/4” (T), 1/16” (C)				
DS	2-47A432-3-14	063	AZ38	727			CLS 1-3/4” / 1/16” (T), 11/16” (C)				
DS	2-47A432-3-15	063	AZ142	728			CLS 2-1/4” / 3/4” (T), 1/16” (C)				
DS	2-47A432-3-16	063	AZ157	725			CLS 4” / 3/8” (T), 3/8” (C)				
DS	47A435-3-8	063	U-A13	706			CLS 1-1/8” / 1/4” (T), 1/16” (C)				
DS	2-47A435-3-18T	063	U-C13	719			CLS 3” / 3/16” (T), 3/8” (C)				
DS	2-47A435-3-18B	063	U-C13	719			CLS 3” / 3/16” (T), 3/8” (C)				
DS	2-47A435-12-6	063	AZ291	721			CLS 2” / 1/16” (T), 3/8” (C)				
DS	47A435-12-62	063	AZ324	731			CLS 5/8” / 5/16” (T), 1/16” (C)				

Attachment 27
(Page 24 of 37)

DYNAMIC SNUBBERS, VARIABLE SPRINGS AND CONSTANT SPRINGS RETURN TO AMBIENT <105°F DATA

Date _____

TYPE SUPT	SUPPORT IDENTIFIER	SYS	LOCATION	ELEV	SERIAL NO.	TEMP °F	SET POINT / MOVEMENT	SCALE READING	PERFORMER INIT/ DATE	VERIFIER INIT/ DATE	COMMENTS
DS	47A435-12-89	063	AZ324	728			CLS 1-1/4” / 3/16” (T), 1/16” (C)				
DS	2-47A435-12-93	063	AZ300	723			CLS 5/8” / 1-5/16” (T), 1/16” (C)				
DS	47A435-13-60	063	AZ32	723			CLS 1” / 7/8” (T), 0” (C)				
VS	47A435-13-73	063	AZ347	740	N/A		CLS 1,125# / +11/16” / -3/16” (NOR), + 7/8” / -5/16” (MAX)				
DS	2-47A435-13-117	063	AZ45	721			CLS 1-3/4” / 1/16” (T), 1” (C)				
DS	2-47A435-13-118	063	AZ45	718			CLS 2” / 3/16” (T),1/16” (C)				
VS	2-47A435-13-119	063	AZ45	718	N/A		CLS 91# / +1/16” / -1/16” (NOR), +1/4” / -1/4” (MAX)				
VS	47A435-14-61	063	AZ125	721	N/A		CLS 1,715# / +3/16” (UP) (NOR), 1/2” (UP) (MAX)				
DS	47A435-14-80N	063	AZ146	725			CLS 1-1/2" / 1/16" (T), 5/16" (C)				
DS	47A435-14-80S	063	AZ146	725			CLS 1-1/2" / 1/16" (T), 5/16" (C)				
VS	47A435-14-81	063	AZ145	730	N/A		CLS 175 / +.01” / -.34” (NOR), +.02” / -.40” (MAX)				
VS	47A435-14-84	063	AZ150	730	N/A		CLS 48# / +0 UP”, -3/16” DOWN (NOR), +0 UP”, -3/16” DOWN (MAX)				
DS	2-47A435-14-107	063	AZ143	727			CLS 1-1/4” / 1/8” (T), 3/8” (C)				
DS	2-47A435-14-109	063	AZ199	721			CLS 1-11/16” / 0” (T), 7/8” (C)				
VS	47A435-14-110	063	AZ132	720	N/A		CLS 200# / +3/16” / -0” (NOR), +3/8” / -1/16” (MAX)				
VS	47A435-15-58	063	AZ228	720	N/A		CLS 154# / +.02” / -.01” (NOR), +.34” / -.32” (MAX)				

Attachment 27
(Page 25 of 37)

DYNAMIC SNUBBERS, VARIABLE SPRINGS AND CONSTANT SPRINGS RETURN TO AMBIENT <105°F DATA

Date _____

TYPE SUPT	SUPPORT IDENTIFIER	SYS	LOCATION	ELEV	SERIAL NO.	TEMP °F	SET POINT / MOVEMENT	SCALE READING	PERFORMER INIT/ DATE	VERIFIER INIT/ DATE	COMMENTS
DS	47A435-15-70	063	AZ232	718			CLS 2-3/8"/ 3/8" (T), 1/16" (C)				
DS	47A435-15-79	063	AZ219	724			CLS 1-1/2" / 0" (T), 3/4" (C)				
DS	47A435-15-97	063	AZ218	723			CLS 3" / 1/16" (T), 11/16" (C)				
DS	47A435-16-17	063	AZ286	729			CLS 1-1/8" / 1/16" (T), 3/16" (C)				
DS	47A435-16-21E	063	AZ292	733			CLS 2-7/16" / 1/16" (T), 1/16" (C)				
DS	47A435-16-21W	063	AZ292	733			CLS 3-1/8" / 1/16" (T), 1/16" (C)				
DS	47A435-16-31	063	AZ285	731			CLS 2 1/4" / 1/16" (T), 3/16" (C)				
DS	47A435-16-33N	063	AZ289	731			CLS 3" / 1/16" (T), 1/16" (C)				
DS	47A435-16-33S	063	AZ289	731			CLS 1" / 1/16" (T), 1/4" (C)				
DS	47A435-16-34N	063	AZ282	726			CLS 2-7/8" / 1/16" (T), 3/16" (C)				
DS	47A435-16-34S	063	AZ282	726			CLS 2" / 0" (T), 1/32" (C)				
DS	47A435-16-47	063	AZ289	733			CLS 2-3/4" / 1/16" (T), 3/16" (C)				
DS	47A435-16-50S	063	AZ298	724			CLS 2" / 1/16" (T), 5/16" (C)				
DS	47A435-16-50E	063	AZ298	724			CLS 2" / 1/8" (T), 3/8" (C)				
DS	47A435-16-51	063	AZ291	729			CLS 2" / 3/16" (T), 0" (C)				
DS	47A435-16-55E	063	AZ295	732			CLS 2-7/8" / 1/16" (T), 1/8" (C)				
DS	47A435-16-55S	063	AZ295	732			CLS 2" / 1/8" (T), 1/4" (C)				
DS	47A435-16-62N	063	AZ294	725			CLS 1-3/16" / 1/16" (T), 0" (C)				
DS	47A435-16-62S	063	AZ294	725			CLS 1-3/16" / 1/16" (T), 0" (C)				
DS	47A435-16-65	063	AZ296	719			CLS 2-5/8" / 0" (T), 3/8" (C)				
DS	47A435-16-66	063	AZ296	719			CLS 2" / 1/8" (T), 1/4" (C)				

Attachment 27
(Page 26 of 37)

DYNAMIC SNUBBERS, VARIABLE SPRINGS AND CONSTANT SPRINGS RETURN TO AMBIENT <105°F DATA

Date _____

TYPE SUPT	SUPPORT IDENTIFIER	SYS	LOCATION	ELEV	SERIAL NO.	TEMP °F	SET POINT / MOVEMENT	SCALE READING	PERFORMER INIT/ DATE	VERIFIER INIT/ DATE	COMMENTS
DS	2-47A435-16-73	063	AZ284	724			CLS 1-15/16” / 1/8” (T), 1/16” (C)				
VS	2-47A435-16-75	063	AZ284	724	N/A		CLS 155# / -1/16” (NOR), -1/16” (MAX)				
DS	2-47A435-16-76	063	AZ284	729			CLS 2” / 1/16” (T), 3/16” (C)				
DS	2-47A435-16-77	063	AZ285	729			CLS 2-3/16” / 1/16” (T), 3/8” (C)				
DS	2-47A435-16-78	063	AZ285	729			CLS 2” / 1/8” (T), 3/16” (C)				
VS	2-47A435-16-79	063	AZ298	731	N/A		CLS 210# / +5/16”, -1/16” (NOR) +3/8”, -1/16” (MAX)				
VS	47A437-1-25	063	T-A10	690	N/A		CLS 2,683# / +1/16” / -0” (NOR), +1/16” ‘ -1/16” (MAX)				
DS	2-47A437-1-62	063	U-A12	688			CLS 3-1/2” / 1/4” (T), 2-5/16” (C)				
DS	2-47A437-2-4	063	U-A11	681			CLS 2-7/8” / 5/16” (T), 1/16” (C)				
DS	47A437-2-22	063	T-A11	684			CLS 2” / 0” (T), 1/4” (C)				
DS	47A437-2-24	063	U-A11	686			CLS 1-1/2” / 3/16”(T), 1/16” (C)				
VS	47A437-2-28N	063	U-A11	676	N/A		CLS 7,141# / +.06” / -.31 (NOR), +.06” / -.31” (MAX)				
VS	47A437-2-28S	063	U-A11	676	N/A		CLS 7,141# / +.06” / -.31 (NOR), +.06” / -.31” (MAX)				
VS	47A437-2-29E	063	U-A10	681	N/A		CLS 1,341# / +1/16” / -0” (NOR), +1/16” / 0” (MAX)				
VS	47A437-2-29W	063	U-A10	681	N/A		CLS 1509# / +1/16” / -0” (NOR), +1/16” / 0” (MAX)				
DS	63-2SIS-V142N	063	V-A10	687	N/A		CLS 2-1/2” / 3/16” (T), 1/4” (C)				

Attachment 27
(Page 27 of 37)

DYNAMIC SNUBBERS, VARIABLE SPRINGS AND CONSTANT SPRINGS RETURN TO AMBIENT <105°F DATA

Date _____

TYPE SUPT	SUPPORT IDENTIFIER	SYS	LOCATION	ELEV	SERIAL NO.	TEMP °F	SET POINT / MOVEMENT	SCALE READING	PERFORMER INIT/ DATE	VERIFIER INIT/ DATE	COMMENTS
DS	63-2SIS-V142S	063	V-A10	687	N/A		CLS 2-1/2” / 3/16” (T), 1/4” (C)				
VS	63-2SIS-V143N	063	V-A11	690	N/A		CLS 978# / +1/4” / 0” (NOR), +1/8” / -3/16” (MAX)				
VS	63-2SIS-V143S	063	V-A11	690	N/A		CLS 1,775# / +1/4” / 0” (NOR), +1/8” / -3/16” (MAX)				
VS	63-2SIS-V145	063	V-A11	691	N/A		CLS 2,177# / +1/8” / -1/4” (NOR), +1/16” / -7/16” (MAX)				
DS	63-2SIS-R155	063	V-A12	688			CLS 3.4” / 0” (T), 13/16” (C)				
VS	63-2SIS-V166N	063	U-A10	689	N/A		CLS 773 / +.21” / -.05” (NOR), +.22” / -.06” (MAX)				
VS	63-2SIS-V166S	063	U-A10	689	N/A		CLS 773 / +.21” / -.05” (NOR), +.22” / -.06” (MAX)				
DS	63-2SIS-R168N	063	U-A10	689			CLS 2-5/8” / 1/32” (T), 5/16” (C)				
DS	63-2SIS-R168S	063	U-A10	689			CLS 2-5/8” / 1/32” (T), 5/16” (C)				
DS	63-2SIS-R170	063	U-A12	687			CLS 3-1/2” / 0” (T), 1-9/16” (C)				
DS	63-2SIS-R211	063	V-A12	688			CLS 2-1/2” / 9/16” (T), 0” (C)				
DS	63-2SIS-R214	063	V-A11	686			CLS 3” / .89” (T), 0” (C)				
DS	63-2SIS-R216	063	U-A11	684			CLS 2-3/4” / 0” (T), 1/8” (C)				
DS	63-2SIS-R240N	063	U-A12	686			CLS 1” / 13/16”” (T), 0” (C)				

Attachment 27
(Page 28 of 37)

DYNAMIC SNUBBERS, VARIABLE SPRINGS AND CONSTANT SPRINGS RETURN TO AMBIENT <105°F DATA

Date _____

TYPE SUPT	SUPPORT IDENTIFIER	SYS	LOCATION	ELEV	SERIAL NO.	TEMP °F	SET POINT / MOVEMENT	SCALE READING	PERFORMER INIT/ DATE	VERIFIER INIT/ DATE	COMMENTS
DS	63-2SIS-R240S	063	U-A12	686			CLS 2” / 13/16”” (T), 0” (C)				
DS	63-2SIS-R242	063	U-A12	686			CLS 2-5/8” / 11/16” (T), 0” (C)				
DS	63-2SIS-R245	063	T-A11	686			CLS 2-1/2” / 0” (T), 1/8” (C)				
DS	63-2SIS-R276	063	T-A11	689			CLS 2” / 5/16” (T), 0” (C)				

Attachment 27
(Page 29 of 37)

DYNAMIC SNUBBERS, VARIABLE SPRINGS AND CONSTANT SPRINGS RETURN TO AMBIENT <105°F DATA

Date _____

SAFETY INJECTION PUMP B-B DISCHARGE TO LOOP #4 HOT LEG											
TYPE SUPT.	SUPPORT IDENTIFIER	SYS	LOCATION	ELEV.	SERIAL NO.	TEMP °F	SET POINT / MOVEMENT	SCALE READING	PERFORMER INIT/ DATE	VERIFIER INIT/ DATE	COMMENTS
DS	2-74-015	074	AZ0	724			CLS 1-3/4” / .55” (T), .02” (C)				
DS	2-74-017	074	AZ0	722			CLS 1” / 3/16” (T), 0” (C)				

FROM LOOP #4 HOT LEG TO RHR PUMPS A AND B SUCTION											
TYPE SUPT.	SUPPORT IDENTIFIER	SYS	LOCATION	ELEV.	SERIAL NO.	TEMP °F	SET POINT / MOVEMENT	SCALE READING	PERFORMER INIT/ DATE	VERIFIER INIT/ DATE	COMMENTS
COMMON											
VS	2-74-022	074	AZ354	716	N/A		CLS 10,515# / +1/16 / -3/4” (NOR), +1/16” / -3/4” (MAX)				
DS	47A432-3-4	074	AZ349	707			CLS 3-3/4” / 7/16” (T), 1/16” (C)				
DS	2-74-010	074	AZ354	707			CLS 3” / 7/16” (T), 1/16” (C)				
DS	2-74-011	074	AZ361	707			CLS 4” / .06” (T), 1.64” (C)				
VS	2-74-012	074	AZ347	707	N/A		CLS 2,340# / +.03” / -.66”(NOR), +.17” / -.83” (MAX)				
VS	2-47A432-3-17	074	AZ354	707	N/A		CLS 3,482# / +1/16” / -3/8” (NOR) +1/16” / -3/8” (MAX)				
DS	2-74-008	074	AZ354	707			CLS 4-1/4” / 7/16” (T), 1-1/16” (C)				
DS	47A432-2-2	063	V-A11	718			CLS 3” / 0” (T), 13/16” (C)				

Attachment 27
(Page 30 of 37)

DYNAMIC SNUBBERS, VARIABLE SPRINGS AND CONSTANT SPRINGS RETURN TO AMBIENT <105°F DATA

Date _____

FROM LOOP #4 HOT LEG TO RHR PUMPS A AND B SUCTION											
TYPE SUPT.	SUPPORT IDENTIFIER	SYS	LOCATION	ELEV.	SERIAL NO.	TEMP °F	SET POINT / MOVEMENT	SCALE READING	PERFORMER INIT/ DATE	VERIFIER INIT/ DATE	COMMENTS
VS	63-2SIS-V179	063	V-A11	697	N/A		CLS 2,519# / +1/4" / -1/16" (NOR), +5/16" / -5/32" (MAX)				
VS	63-2SIS-V180	063	V-A11	723	N/A		CLS 4,306# / +1/8" / -0" (NOR), +3/16" / -3/16" (MAX)				
DS	2-47A432-6-17	063	V-A11	693			CLS 2-5/8" / 1/16" (T), 3/16" (C)				
FROM LOOP #4 HOT LEG TO RHR PUMP A SUCTION											
VS	63-2SIS-V134	063	V-A11	678	N/A		CLS 4,360# / +1/8" / -0" (NOR), +1/16" / -1/4" (MAX)				
VS	63-2SIS-V136	063	V-A11	676	N/A		CLS 2,082# / -5/32" (NOR), +1/32, -3/16" (MAX)				
VS	63-2SIS-V139NW	063	V-A10	677	N/A		CLS 263# / +0" / -.13" (NOR), +0" / -.14" (MAX)				
VS	63-2SIS-V139SE	063	V-A10	677	N/A		CLS 331# / +0" / -.13" (NOR), +0" / -.14" (MAX)				

Attachment 27
(Page 31 of 37)

DYNAMIC SNUBBERS, VARIABLE SPRINGS AND CONSTANT SPRINGS RETURN TO AMBIENT <105°F DATA

Date _____

FROM LOOP #4 HOT LEG TO RHR PUMPS A AND B SUCTION											
FROM LOOP #4 HOT LEG TO RHR PUMP B SUCTION											
TYPE SUPT.	SUPPORT IDENTIFIER	SYS	LOCATION	ELEV.	SERIAL NO.	TEMP °F	SET POINT / MOVEMENT	SCALE READING	PERFORMER INIT/ DATE	VERIFIER INIT/ DATE	COMMENTS
VS	63-2SIS-V158	063	U-A11	678	N/A		CLS 6,135 / +1/16” / -0” (NOR), +1/8” / -1/8” (MAX)				
VS	63-2SIS-V163N	063	U-A10	677	N/A		CLS 1,850# / -1/16” (NOR), +0” / -1/8” (MAX)				
VS	63-2SIS-V163S	063	U-A10	677	N/A		CLS 1,244# / -1/16” (NOR), +0” / -1/8” (MAX)				

Attachment 27
(Page 32 of 37)

DYNAMIC SNUBBERS, VARIABLE SPRINGS AND CONSTANT SPRINGS RETURN TO AMBIENT <105°F DATA

Date _____

TYPE SUPT	SUPPORT IDENTIFIER	SYS	LOCATION	ELEV	SERIAL NO.	TEMP °F	SET POINT / MOVEMENT	SCALE READING	PERFORMER INIT/ DATE	VERIFIER INIT/ DATE	COMMENTS
VS	2-68-001	068	AZ147	724	N/A		CLS 5,695# / +3/8” / -0” (NOR), +5/8” / -1/4” (MAX)				
VS	2-68-005	068	AZ92	725	N/A		CLS 4,614 / +0” / -1-1/2” (NOR), +0” / -2-1/4” (MAX)				
CS	2-68-011N	068	AZ104	787	N/A		CLS 1.8 INC / +2.70” / -.11” (MAX)				
CS	2-68-011S	068	AZ104	787	N/A		CLS 1.8 INC / +2.70” / -.11” (MAX)				
DS	2-68-020	068	AZ104	733			CLS 2-11/16” / 5/8” (T), 1/16” (C)				
DS	2-68-021	068	AZ110	729			CLS 2-7/8” / 1/16” (T), 9/16” (C)				
DS	2-68-023E	068	AZ109	736			CLS 1-7/8” / 1/16” (T), 15/16” (C)				
DS	2-68-023W	068	AZ109	736			CLS 1-7/8” / 1/16” (T), 15/16” (C)				
DS	2-68-024	068	AZ108	736			CLS 2-1/8” / 1/16” (T), 7/8” (C)				
VS	2-68-025	068	AZ110	733	N/A		CLS 1,113# / +1/16” /-7/16” (NOR), +1/16 / -7/16” (MAX)				
VS	2-68-028	068	AZ104	754	N/A		CLS 758# / +.95” / -.05” (NOR), +1.29” / -.34” (MAX)				
DS	2-68-030	068	AZ110	732			CLS 3” / 1/4” (T), 3/8” (C)				
DS	2-68-031	068	AZ104	733			CLS 2-1/16” / 0” (T), 9/16” (C)				
DS	2-68-032	068	AZ98	736			CLS 1.81” / 0” (T), 1-3/16” (C)				
DS	2-68-033	068	AZ98	736			CLS 2-1/8” / 5/16” (T), 3/8” (C)				
DS	2-68-034	068	AZ98	733			CLS 1-1/8” / 1” (T), 1/16” (C)				
DS	2-68-036	068	AZ98	733			CLS 1-15/16” / 1/4” (T), 3/4” (C)				
DS	2-68-042	068	AZ104	735			CLS 3-1/4” / 1/16” (T), 13/16” (C)				

Attachment 27
(Page 33 of 37)

DYNAMIC SNUBBERS, VARIABLE SPRINGS AND CONSTANT SPRINGS RETURN TO AMBIENT <105°F DATA

Date _____

TYPE SUPT	SUPPORT IDENTIFIER	SYS	LOCATION	ELEV	SERIAL NO.	TEMP °F	SET POINT / MOVEMENT	SCALE READING	PERFORMER INIT/ DATE	VERIFIER INIT/ DATE	COMMENTS
VS	2-68-043	068	AZ108	735	N/A		CLS 678# / +.06” / -.32” (NOR), +.06” / -.32” (MAX)				
DS	2-68-044	068	AZ108	734			CLS 1-7/16” (+1/16”, -3/8”) / 5/8” (T), 1/16” (C)				
DS	2-68-050	068	AZ104	733			CLS 1-3/4” / 9/16”” (T), 1/8” (C)				
DS	2-68-053	068	AZ98	733			CLS 2-3/8” / 1/8” (T), 1-1/16” (C)				
DS	2-68-093	068	AZ100	784			CLS 3/4” / 4-5/8” (T), 1/8” (C)				
CS	2-68-094	068	AZ99	791	N/A		CLS 3/4” / 4-1/2” (UP)				
DS	2-68-096	068	AZ104	784			CLS 11/16” (± 1/8) / 3-13/16” (T), 1/8” (C)				
VS	2-68-334	068	AZ47	707	N/A		CLS 153# / +.01” / -.20” (NOR), +.11” / -.26” (MAX)				
DS	2-68-348	068	AZ142	706			CLS 162# . +.03” / -.63” (NOM), +.03” / -.75” (MAX)				
VS	2-68-379	068	AZ323	707	N/A		CLS 124# / 3/4” (DOWN)				
VS	2-68-382	068	AZ321	708	N/A		CLS 157# / .52” (DOWN (NOR), .78” (DOWN) (MAX)				
DS	2-68-404E	068	AZ82	754			CLS 5-3/8” / 1/16” (T), 4-7/8” (C)				
DS	2-68-404W	068	AZ82	754			CLS 5-3/8” / 1/16” (T), 4-7/8” (C)				
DS	2-68-406E	068	AZ87	747			CLS 3” / 1/4” (T), 1/4” (C)				
DS	2-68-406W	068	AZ87	747			CLS 3” / 1/4” (T), 1/4” (C)				
DS	2-68-412N	068	AZ99	786			CLS 1-3/4” / 1/8” (T), 5/16” (C)				
DS	2-68-412S	068	AZ99	788			CLS 1-3/4” / 1/8” (T), 5/16” (C)				

Attachment 27
(Page 34 of 37)

DYNAMIC SNUBBERS, VARIABLE SPRINGS AND CONSTANT SPRINGS RETURN TO AMBIENT <105°F DATA

Date _____

TYPE SUPT	SUPPORT IDENTIFIER	SYS	LOCATION	ELEV	SERIAL NO.	TEMP °F	SET POINT / MOVEMENT	SCALE READING	PERFORMER INIT/ DATE	VERIFIER INIT/ DATE	COMMENTS
DS	2-68-415N	068	AZ97	787			CLS 2” / 7/8” (T), 1/16” (C)				
DS	2-68-415S	068	AZ97	787			CLS 2” / 1-1/16” (T), 1/16” (C)				
DS	2-68-427	068	AZ97	778			CLS 2-3/4” / 1/8” (T), 3/8” (C)				
DS	2-68-429E	068	AZ104	761			CLS 2-9/16” / 1/4” (T), 9/16” (C)				
DS	2-68-429W	068	AZ104	761			CLS 2-9/16” / 1/4” (T), 9/16” (C)				
DS	2-47A465-1-108	068	AZ110	729			CLS 2-3/4” /1/16” (T), 1/2” (C)				
DS	47A465-2-23	068	AZ100	776			CLS 3-7/8” / 0” (T), 3-3/16” (C)				
DS	47A465-2-41	068	AZ104	775			CLS 1-1/2” / 1/16” (T), 1/4” (C)				
CS	47A465-2-42	068	AZ104	775	N/A		CLS 3/4” / 2.96” (UP)				
DS	47A465-2-46	068	AZ97	758			CLS 3” / 0” (T), 2-1/8” (C)				
VS	47A465-2-47	068	AZ100	758	N/A		CLS 130# / 2.10” (NOR), 2.12” (MAX)				
VS	2-47A465-2-81	068	AZ99	737	N/A		CLS 50# / +1/4” / -0” (NOR), +5/16” / -1/16” (MAX)				
DS	47A465-4-7E	068	AZ104	736			CLS 1-3/4 / 0” (T), 3/8” (C)				
DS	47A465-4-7W	068	AZ104	736			CLS 1-3/8 ” / 1/16” (T), 3/16” (C)				
DS	47A465-8-60	068	AZ335	742			CLS 2-1/2” / 1/16” (T), 7/16” (C)				
DS	47A465-8-61	068	AZ65	742			CLS 2-11/16” / 1/16” (T), 1-11/16” (C)				
DS	47A465-8-63	068	AZ145	742			CLS 2-3/4” / 1/16” (T), 1-1/2” (C)				
VS	47A465-8-73	068	AZ40	752	N/A		CLS 144# / +2-1/6” / -1/16” (NOR), +2-7/16” / -7/16” (MAX)				

Attachment 27
(Page 35 of 37)

DYNAMIC SNUBBERS, VARIABLE SPRINGS AND CONSTANT SPRINGS RETURN TO AMBIENT <105°F DATA

Date _____

TYPE SUPT	SUPPORT IDENTIFIER	SYS	LOCATION	ELEV	SERIAL NO.	TEMP °F	SET POINT / MOVEMENT	SCALE READING	PERFORMER INIT/ DATE	VERIFIER INIT/ DATE	COMMENTS
VS	2-47A465-8-97	068	AZ111	742	N/A		CLS 100 / +3/4” / -1/16” (NOR), +7/8” / -3/16” (MAX)				

Attachment 27
(Page 36 of 37)

DYNAMIC SNUBBERS, VARIABLE SPRINGS AND CONSTANT SPRINGS RETURN TO AMBIENT <105°F DATA

Date _____

RHR PUMP A-A DISCHARGE TO RHR HEAT EXCHANGER A											
TYPE SUPT.	SUPPORT IDENTIFIER	SYS	LOCATION	ELEV.	SERIAL NO.	TEMP °F	SET POINT / MOVEMENT	SCALE READING	PERFORMER INIT/ DATE	VERIFIER INIT/ DATE	COMMENTS
DS	74-2RHR-R096	074	V-A11	688			CLS 3” / 1/16” (T), 1” (C)				
RHR HEAT EXCHANGER A DISCHANGE TO COLD LEG INJECTION											
DS	74-2RHR-R014N	074	W-A10	732			CLS 1” / 0” (T), 1/4” (C)				
DS	74-2RHR-R014S	074	W-A10	732			CLS 1” / 0” (T), 1/4” (C)				
VS	74-2RHR-V015N	074	W-A10	733	N/A		CLS 661# / +1/4”, -1/16” (NOR), +1/4” / -1/16” (MAX)				
VS	74-2RHR-V015S	074	W-A10	733	N/A		CLS 661# / +1/4”, -1/16” (NOR), +1/4” / -1/16” (MAX)				
DS	74-2RHR-R028	074	V-A11	732			CLS 4-1/16” / 1/16” (T), 1/16” (C)				
VS	74-2RHR-V121	074	W-A10	719	N/A		CLS 711# / +1/16”, -0” (NOR), +1/16”, -0” (MAX)				
DS	74-2RHR-R216	074	W-A11	728			CLS 2” / 1/2” (T), 1/16” (C)				
DS	74-2RHR-R220	074	W-A11	729			CLS 3” / 1/16” (T), 1/8” (C)				
RHR HEAT EXCHANGER A BYPASS LINE											
TYPE SUPT.	SUPPORT IDENTIFIER	SYS	LOCATION	ELEV.	SERIAL NO.	TEMP °F	SET POINT / MOVEMENT	SCALE READING	PERFORMER INIT/ DATE	VERIFIER INIT/ DATE	COMMENTS
DS	74-2RHR-R037	074	W-A9	730			CLS 3” / 3/8” (T), 1/16” (C)				
VS	74-2RHR-V038	074	W-A9	730	N/A		CLS 2472# / +7/16”, -1/16” (NOR), +7/16” / -1/16” (MAX)				

Attachment 27
(Page 37 of 37)

DYNAMIC SNUBBERS, VARIABLE SPRINGS AND CONSTANT SPRINGS RETURN TO AMBIENT <105°F DATA

Date _____

RHR PUMP B-B DISCHARGE TO RHR HEAT EXCHANGER B											
TYPE SUPT.	SUPPORT IDENTIFIER	SYS	LOCATION	ELEV.	SERIAL NO.	TEMP °F	SET POINT / MOVEMENT	SCALE READING	PERFORMER INIT/ DATE	VERIFIER INIT/ DATE	COMMENTS
DS	74-2RHR-R058	074	V-A11	689			CLS 2-1/2” / 1/16” (T), 1” (C)				
RHR HEAT EXCHANGER B DISCHANGE TO COLD LEG INJECTION											
VS	74-2RHR-V002	074	V-A10	729	N/A		CLS 1088# / +.31”, -.09” (NOR), +.50” / -.25” (MAX)				
DS	74-2RHR-R003E	074	V-A10	727			CLS 2” / 1/32” (T), 9/16” (C)				
DS	74-2RHR-R003W	074	V-A10	727			CLS 1-1/2” / 1/32” (T), 9/16” (C)				
DS	74-2RHR-R006	074	V-A10	721			CLS 2-1/4” / 1/4” (T), 0” (C)				
VS	74-2RHR-V011	074	V-A10	730	N/A		CLS 1624# / +7/16”, -1/8” (NOR), +5/8” / -5/16” (MAX)				
DS	74-2RHR-R230	074	W-A11	729			CLS 2-1/4” / 1/16” (T), 1/2” (C)				
DS	74-2RHR-R232	074	W-A11	729			CLS 3” / 0” (T), 7/16” (C)				
VS	2-47A435-2-2	074	V-A10	719	N/A		CLS 1478# / +1/16”, -1/16” (NOR), +1/8” / -1/8” (MAX)				
RHR HEAT EXCHANGER B BYPASS LINE											
TYPE SUPT.	SUPPORT IDENTIFIER	SYS	LOCATION	ELEV.	SERIAL NO.	TEMP °F	SET POINT / MOVEMENT	SCALE READING	PERFORMER INIT/ DATE	VERIFIER INIT/ DATE	COMMENTS
VS	74-2RHR-V041	074	V-A9	734	N/A		CLS 1509# / +9/16”, -1/16” (NOR), +11/16” / -1/16” (MAX)				

Attachment 28
(Page 1 of 1)

SIGNATURE LOG SHEET STORAGE

THIS ATTACHMENT IS FOR STORING ALL OF THE TEST PERSONNEL SIGNATURE LOG SHEETS.

Attachment 29
(Page 1 of 1)

CHRONOLOGICAL TEST LOG SHEET STORAGE

THIS ATTACHMENT IS FOR STORING ALL OF THE CHRONOLIGICAL TEST LOG SHEETS.

Attachment 30
(Page 1 of 1)

PROBLEM REPORT LOG SHEET STORAGE

Date _____

THIS ATTACHMENT IS FOR STORING ALL OF THE PROBLEM REPORT LOG SHEETS.

Attachment 31
(Page 1 of 1)

PROBLEM REPORT SHEET STORAGE

Date _____

THIS ATTACHMENT IS FOR STORING ALL OF THE PROBLEM REPORT SHEETS.

Attachment 32
(Page 1 of 1)

TEST DEFICIENCY NOTICE LOG SHEET STORAGE

Date _____

THIS ATTACHMENT IS FOR STORING ALL OF THE TEST DEFICIENCY NOTICE LOG SHEETS.

Attachment 33
(Page 1 of 1)

TEST DEFICIENCY NOTICE SHEET STORAGE

Date _____

THIS ATTACHMENT IS FOR STORING ALL OF THE TEST DEFICIENCY NOTICE SHEETS

Attachment 34
(Page 1 of 1)

REVIEW OF CHANNEL, DISPLACEMENT, AND TEMPERATURE INPUT TO THE DAS

Date _____

THIS ATTACHMENT IS FOR STORING ALL OF THE REVIEW SHEETS FOR THE CHANNEL, DISPLACEMENT, AND TEMPERATURE INPUT TO THE DAS