Official Transcript of Proceedings

NUCLEAR REGULATORY COMMISSION

Title: Advisory Committee on Reactor Safeguards - 620th Meeting

Docket Number: (n/a)

Location: Rockville, Maryland

Date: December 4, 2014

Work Order No.: NRC-1263 Pages 1-351

NEAL R. GROSS AND CO., INC.
Court Reporters and Transcribers
1323 Rhode Island Avenue, N.W.
Washington, D.C. 20005
(202) 234-4433

UNITED STATES OF AMERICA

NUCLEAR REGULATORY COMMISSION

+ + + + +

620TH MEETING

ADVISORY COMMITTEE ON REACTOR SAFEGUARDS

(ACRS)

+ + + + +

THURSDAY

DECEMBER 4, 2014

+ + + + +

ROCKVILLE, MARYLAND

+ + + + +

The Advisory Committee met at the Nuclear Regulatory Commission, Two White Flint North, Room T2B1, 11545 Rockville Pike, at 8:30 a.m., John W. Stetkar, Chairman, presiding.

COMMITTEE MEMBERS:

JOHN W. STETKAR, Chairman

HAROLD B. RAY, Vice Chairman

RON BALLINGER, Member

DENNIS C. BLEY, Member-at-Large

MICHAEL L. CORRADINI, Member

DANA A. POWERS, Member

JOY REMPE, Member

PETER RICCARDELLA, Member

MICHAEL T. RYAN, Member
STEPHEN P. SCHULTZ, Member
GORDON R. SKILLMAN, Member

DESIGNATED FEDERAL OFFICIAL:
MICHAEL SNODDERLY

ALSO PRESENT:
CHRISTINA ANTONESCU, NRC
ROBERT ARRITT, EPRI
SCOTT BAUER, NEI
MICHELLE BENSI, NRC
ALYSIA BONE, NRC
JEREMY BOWEN, NRC
ERIC BOWMAN, NRC
GORDON CLEFTON, NEI
PAUL COLAIANNI, Duke Energy
SCOTT FLANDERS, NRC
BRYAN FORD, Entergy
MICHAEL FRANOVICH, NRC
SCOT GREENLEE, NEI
DAVID HEACOCK, Dominion
GARY HOLAHAN, NRC
WAYNE JOHNSON, EPRI
MARVIN LEWIS *

JOHN McKIRGAN, NRC
JEFFREY MITMAN, NRC
ABY MOHSENI, NRC
ANTHONY PIETRANGELO, NEI
JOSEPH POLLOCK, NEI
WILLIAM RECKLEY, NRC
TIM REED, NRC
JAMES SCAROLA, NEI
FRED SCHOFER, NRC
SUZANNE SCHROER, NRC
G. MATHARU SINGH, NRC
GEORGE TARTAL, NRC
RUTH THOMAS, Environmentalists, Inc. *
BILL WEBSTER, Dominion
JACOB ZIMMERMAN, NRC

*Present via telephone

A G E N D A

P R O C E E D I N G S

8:30 a.m.

CHAIR STETKAR: The meeting will now come to order. This is the first day of the 620th meeting of the Advisory Committee on Reactor Safeguards.

During today's meeting, the Committee will consider the following; proposed rule for mitigation of beyond-design-basis events, integration of mitigation strategies for beyond-design-basis external events and the reevaluation of flooding hazards, regulatory gap analysis of the Nuclear Regulatory Commission's cost benefit guidance and practices, Branch Technical Position 8-9, Open Phase Conditions in Electric Power System, and preparation of ACRS reports.

The meeting is being conducted in accordance with the provisions of the Federal Advisory Committee Act. Mr. Mike Snodderly is the Designated Federal Official for the initial portion of the meeting.

Portions of the session on proposed rule for mitigation of beyond-design-basis events may be closed in order to protect unclassified safeguards information. We have received no written comments or request to make oral statements from members of the

public regarding today's sessions.

There will be a phone bridge line. To preclude interruption of the meeting the phone will be placed in listen-in mode during the presentations and Committee discussions.

A transcript of the meeting is being kept and it is requested that speakers use one of the microphones, identify themselves, and speak with sufficient clarity and volume so they can be readily heard. And I ask everyone in the room to please check all of your communications devices, turn them off, silence them or throw them under water, or do something to them, please.

And with that, because we have a very, very tight agenda for today, we will proceed with the first topic, and I'll turn the meeting over to Dr. Steve Schultz. Steve.

MEMBER SCHULTZ: Fine. For the record, I want to welcome the Staff to the presentations today. John has introduced the topic for this morning's presentation. We are going to be holding this discussion for the full morning. Our first topic is this one on mitigation of beyond-design-basis events and proposed rulemaking.

The members that are in attendance today

are Michael Corradini, Joy Rempe, Ron Ballinger, Mike Ryan, John Stetkar, Harold Ray, Dana Powers, Dick Skillman, and Pete Riccardella.

This is a topic that the Committee has been considering for some time as it came to be as a part of the Fukushima activities. We met with this group as a full Committee in July and got a preview of what was coming with regard to the rulemaking activity.

Since then, we had a two-day Subcommittee meeting, which the Fukushima Subcommittee is a Committee of the whole of the ACRS, so we had a two-day Subcommittee meeting which included this topic on November 21st.

I want to say that since that meeting we've received additional information associated with Plan 4 of the proposed rulemaking language and so we expect in this presentation to hear more about what's been done, and what is now planned going forward.

Our first presentation is by the NRC Staff, and then we'll hear from industry with regard to their views and their activities associated with the rulemaking. So, with that, I would like to introduce Aby Mohseni to make the introductions of the Staff and the topic. Thank you.

MR. MOHSENI: Thank you very much, Dr. Schultz, distinguished Members. My name is Aby Mohseni, and I'm the Deputy Director of the Division of Policy and Rulemaking in the Office of Nuclear Reactor Regulation.

Today we will provide a shortened version of our presentation similar to what we provided to the Fukushima Subcommittee, as you indicated, Dr. Schultz, on November 21st, 2014 on the proposed mitigation of beyond-design-basis events rulemaking. Please note that this activity is formerly also known as the consolidated rule.

Recognizing the limited time available to us today we will focus on the most important elements of the proposed rule, Paragraphs B, C, and D. We are providing slides on the remaining aspects of the proposed rule for the full Committee's information, but do not plan to discuss those slides in any detail. Of course, we can answer any questions on any aspects of the presentation.

Since the Subcommittee we met with our internal Steering Committee and have revised the proposed rule language to both reflect the ACRS feedback regarding protection for equipment required for beyond-design-basis external events mitigation,

i.e., proposed 50(sss)(C)(2), and to provide language that aligns with COMSECY-14-0037 which is currently with the Commission.

To support this presentation, I have with me several members of NRR and a member from NRO. Tim Reed from our staff will be leading the discussion of the proposed rulemaking. Supporting Tim as the Lead Technical Expert in the mitigation strategies is Eric Bowman from the Japanese Lessons Learned Division. Hiding behind one of the columns if you can find him, we have Bill Reckley, also from the Japanese Lessons Learned Division to support any discussion regarding feedback from NTTF 2.1 flooding reevaluated hazards and its relationship to this proposed rulemaking.

And, finally, we have from NRO's Rulemaking George Tartal to support discussion of the proposed provisions for new reactors. There are other members from the Mitigation of Beyond-Design-Basis Event Rulemaking Working Group in attendance to support questions from the Committee.

The preliminary proposed rule language was made publicly available prior to the Subcommittee meeting and a revised new version is now publicly available. The preliminary proposed rule language shows the integration of requirements that reflect and

align with industry implementation. Since the Commission has not considered the draft proposed rule language, these clearly do not constitute an official NRC position.

As directed by SRM 14-0046 issued July 19th, 2014, this consolidated rulemaking addresses either in requirements or through supporting implementation guidance regulatory actions that stem from all of the recommendations in NTTF 4789.2, 9.3, 9.1 with one exception, maintenance of ERDS capability throughout the accident, 10.2 and 11. 1.

Note that the presentation provides a brief summary of the backfit analysis and basis for the potential inclusion of SAMGs as requirement in this rulemaking activity. This was discussed with the Subcommittee on November 21st, but will not be the focus today.

The NRC is very appreciative of the ACRS time and interest in this proposed rulemaking activity. We look forward to today's discussion. Thank you. Tim.

MR. REED: Okay. Thanks, Aby. Given the time we have, again as Aby said, I'll focus on Paragraphs B, C, and George Tartal from NRO will talk about the PORV-fitted new reactor assessment

requirements of Paragraph D, so I'm going to skip through the first couple of slides, just briefly mention that, of course, this applies to power reactors both currently operating licensed power reactors, as well as new applicants either under Part 50 or Part 52. We have decommissioning provisions built into this, and we're currently working on those to align those with our recent actions on the plants that are decommissioned, make sure we don't have any unintended consequences in that regard, so I won't say anything more about the applicability in that.

So going on now to what I think the focus should be, is Paragraph B, and then I'll talk about C. And also have Eric here to talk about any questions on C, if we need.

B, to me, is the heart of this regulation. It is, in fact, requiring an integrated accident response capability, develop and maintain that capability. It reflects basically taking three different guideline sets and integrating them with the already existing symptom-based EOPs. These all exist, two of which are already required, one of which is a voluntary initiative.

FLEX, which is the first line item there, beyond-design-basis external event mitigation known as

FLEX in the industry. That, of course, is being implemented right now as a result of EA-12-049. This would, of course, make that generically applicable in this rulemaking, so that's a part of this integrated response capability.

The EDMGs usually –- typically called the EDMGs, those are the guideline set that implements the requirements of 10 CFR 50.54(hh)(2). You'll probably recall that comes from the Section B5B of the ICM Order of 2002. Those, of course, are also already in existence. This was simply move those into this set of requirements because it makes a whole lot of sense. A large measure are very, very similar to the strategies that also are being developed under FLEX, so it made sense to pull those in.

And then, of course, the last set of requirements, perhaps the most interesting ones from this rulemaking standpoint are the severe accident management guidelines. These were implemented at the end of 1998 at all facilities in the U.S., but they were done as a voluntary initiative, and we're suggesting to the Commission there may be good reasons to make these a requirement. Of course, as we've mentioned there's pros and cons in that. That's addressed in the slide package. I won't go into a lot

of detail on that, but that's essentially what we're doing.

Now, as a practical reality this is largely already done, as you might expect at facilities, because SAMGs are in existence. These transitions do already exist between EOPs and SAMGs. The EDMGs are existence, and FLEX is being built into the EOPs. But nonetheless, this is going to make this a requirement so that does change the nature of this.

MEMBER REMPE: So, Tim?

MR. REED: Yes, ma'am.

MEMBER REMPE: When I was looking at the draft rule language they had the same text, integrated accident response capability. I didn't see anything about assessment. Could you kind of comment about that a little bit?

MR. REED: In terms of the forward-fitting assessment requirements?

MEMBER REMPE: In terms of an integrated assessment, and what you –- how do we feel that that would fit into this response capability?

MR. REED: Did I say assessment? Okay. I should say integrated response capability.

MEMBER REMPE: Okay.

MR. REED: So, strike that –-

MEMBER REMPE: But how does –- does an assessment fit into the capability –-

MR. REED: No, the assessment is really –-

MR. BOWMAN: That would be –- well, there are two different assessment things that will be discussed today. There's the assessment forward-fitting for the new reactors that's in Paragraph D that George will be talking about. And then there's the integrated assessment that was a part of the 50.54(f) letters pursuant to Recommendation 2.1 that Bill Reckley will be discussing as it pertains to COMSECY-14-0037. And that would be, essentially, showing the capability of the mitigating strategies to address the change in the flooding hazard reevaluation levels.

MEMBER REMPE: So nothing in the rule really, that’s –-

MR. BOWMAN: Well, there is a relation to the rule, but it's not directly required by the rule. Bill will go into that in a lot more detail.

MEMBER REMPE: Okay.

MR. REED: I should be saying capability here, not assessment.

MEMBER REMPE: I think you did.

MR. REED: So, I apologize for that.

MEMBER REMPE: Yes, I just was wanting to clarify that.

MR. REED: All right, thanks.

Slide 6, I mentioned that these different guideline sets would be integrated with the EOPs, and that's intentionally done in that way because we certainly don't want to go back and revisit all the work, an extensive amount of work that was done on the EOPs, develop the symptom-based EOPs. We want to leave that in tact and not inadvertently backfit or do anything else in that regard. So, that’s –- we’ve structured that way in hopes of not doing –- having any unintended consequences, leaving that work in place.

And then we have two additional requirements there. You'll see in Paragraph B it goes to staffing and command and control. This is recognizing the fact that if you want to have a seamless integrated accident response capability you need to have sufficient command and control, obviously. You need to also have enough staffing to do that.

We feel the fact that this is probably in place as a result of implementation of EA-12-049. I think we will, in fact, ask questions in this regard

to make sure that's, in fact, the case. If there's not, I want to understand that for the final rule. So, that's the nature of the requirements right now as they exist in Paragraph B.

All right. Going then to the equipment requirements, Paragraph C. These are essentially doing –- making generically applicable two orders, EA-12-049, of course, mitigation strategies order, and EA-12-051, spent fuel pool level instrumentation order. That's basically what it's trying to do.

So, the first is a basic requirement to have functional capacity and capability for the equipment, and strategy for the equipment. This is making sure you have enough of that equipment that can do the job. Of course, you'll recognize this from the mitigation strategies order.

And then the second thing that's much more interesting, I think, for this Committee and the discussion today, and this is the difference that was already mentioned versus the previous language we provided to the Committee on November 21st, is reasonable protection for that equipment from external events.

You will note that the new language, current version of draft language talks about

protection against external events including any reevaluated hazard, so that's a difference versus the previous language. And that's assuming that the Commission is going to affirm the COMSECY that's with the Commission right now. That's the COMSECY that Eric just talked about, 14-0037. So, that's –- it's written now with that presumption in mind; whereas, before we weren't writing it that way.

CHAIR STETKAR: Tim?

MR. REED: Yes, sir?

CHAIR STETKAR: I'm assuming that the term "reasonably protected" is not very precise, but rules –- I personally think it’s appropriate that rules do not get into precision. I'm assuming that regulatory guidance that would be issued in support of this rule would elaborate more details on what reasonable protection might involve. Is that an appropriate assumption?

MR. BOWMAN: That's a good assumption. NEI-12-06, Revision 0 in Sections 5-9 provide definition for what reasonable protection means under-12-049. We're currently working with industry and external stakeholders on a revision to that particular industry guidance, and will be putting together draft guide, I believe the number is 1301, to go forward and endorse

that with any clarifications and exceptions that are appropriate.

CHAIR STETKAR: Thank you.

MEMBER SCHULTZ: Eric, how extensive do you expect that revision to be from Rev 0?

MR. BOWMAN: At this point, I believe it's going to be essentially just incorporating the alternative approaches that we found acceptable in the industry's implementation of the order. And there will be a few other things that are added in there. One in particular, the validation process has –- there was merely a single mention of licensees would be validating the procedures to show that they can be accomplished in a time frame that it's necessary to accomplish them. There's a lot more detail that's being added into one of the appendices for the new version of the industry guidance as to how that validation will take place. And there will also be a more generalized appendix on approaches for new reactors.

MEMBER SCHULTZ: Thank you.

MR. REED: Okay. Then we also have a basic maintenance requirement. That also again stems from EA-12-049 and the way that order is being implemented, again, it's meant to make generically applicable those

activities to insure that this equipment remains functional and available.

And then, finally, we have a high-level performance-based requirement for the spent fuel pool level instrumentation order that's in this in C-4, I believe, in front of me. So, essentially, then what this –- these requirements as they are built right now are making two orders generically applicable, and they're also reflecting language from the 2.1 reevaluated hazard. So, that's the way Paragraph C is currently drafted.

So, as has been mentioned, this is changing. This language is still not fixed, like even yesterday, we've been working on it every day, so this is the way it looks today.

So, with that I guess we can go to the forward-fitted assessments requirements for new reactors, and George Tartal will talk about that.

MR. TARTAL: Thanks, Tim. So, Paragraph D for new reactor requirements, the first thing I'll say on this is this is an additional requirement outside of the orders that were mentioned earlier. The intent of this new requirement is based on the Commission's Advanced Reactor Policy Statement and the clips from that policy statement are here on the slide.

As Tim mentioned, this is a forward-fit rule. That's our intent, so that's why it applies to applicants and not to current licensees or current design certification holders, et cetera. We want this requirement to be done as early as possible in the design phase, and that's another reason why we're applying it to applicants. And the requirement here would be to perform a design-specific assessment of the effects of an extended loss of all AC power concurrent with loss of normal access to the ultimate heat sink. And then based on the results of that assessment we would expect the applicant to incorporate in the design some features that would minimize reliance on human actions, enhance coping durations, demonstrate the ability to maintain and restore core cooling, containment, and spent fuel cooling capabilities.

And the other thing I wanted to say about this is this doesn't obviate the need for FLEX, just to be very clear about this. We're really looking to give operators more time to respond to the ELAP condition, but they still are very likely going to need to have FLEX.

MEMBER CORRADINI: So, can I ask about that?

MR. TARTAL: Sure.

MEMBER CORRADINI: So, at least in some examples we've seen there's kind of an inconsistency that develops by this in the sense that the new plants have installed features that are quite robust, and in some sense the rule will have features that are different. And they are not allowed to take credit for what they already have on site, if I understand the rule properly.

MR. TARTAL: I wouldn't assume that they couldn't take credit for what they already have. The assessment may look at what they already have in the current design, and it may result in –- the result of the assessment may be that the current design is good enough –-

(Simultaneous speech)

MR. TARTAL: When you look at the guidance, the guidance is saying that –- well, I don't –- we haven't released the guidance yet, but the guidance is going to give some timelines for expectations for when you would need to transition into FLEX equipment. So, based on that assessment, they may find that the design is acceptable as is.

MEMBER CORRADINI: Okay. All right. Well, yesterday we had a meeting and I didn't get that

impression.

MR. TARTAL: Well, yesterday was on a specific design so I don’t want to –-

(Simultaneous speech)

MEMBER CORRADINI: That's fine. I don't want to go to –- all right. But the spirit of this in my mind is that we've got the advanced plants which have at least generically pretty substantial coping capability built in almost independent of site. And now this, at least as I understand it, has the possibility of not allowing them to take credit for things that are there. And so, okay, that's a deterministic way of doing this. Is there a better way being considered by the Staff going forward such that from a risk standpoint certain things that are on this –- that are in the bag of things that they've got, they can take credit for from a risk approach versus this deterministic, you can take credit for that but you can't take credit for this, you can count that but you can't count this?

MR. BOWMAN: I can probably address that a little bit for you. The current version of the proposed rule language does not include the specification that licensees have to rely on portable equipment that was included in the EA-12-049, so you

will see probably a different treatment of pre-staged or installed generators, for example, than was necessary under the order.

MEMBER CORRADINI: All right. So, what I'm hearing is wait and see, the jury is still out. That's what I'm hearing. Am I hearing that correctly?

MR. BOWMAN: Right.

MEMBER CORRADINI: Okay. Because yesterday's jury, or least the interpretation was different than today. Just so I'm --

MEMBER REMPE: Relying on industry guidance.

MR. BOWMAN: This is the proposed rule at this stage and the Commission hasn't made a decision on it, of course.

MEMBER CORRADINI: Okay. But --

MEMBER SCHULTZ: Just to be clear, George, and I'm not trying to quibble, not trying to be too specific here, but what you're talking about is new requirements for new reactors.

MR. TARTAL: Yes, this is an additional requirement. Yes.

MEMBER CORRADINI: So, can I say it differently, and then I'll stop?

MR. TARTAL: Yes.

MEMBER CORRADINI: Which is I understand the need for –- I understand the Staff incorporating the recommendations in NEI 12-06 for current plants. What I'm questioning, wondering is for advanced plants a direct and rigid application of NEI 12-06 seems surprisingly inflexible when you want flexibility. That's all. That's my comment, so I want –- so, I will just leave it there and keep on going.

MR. BOWMAN: I think the only thing I'd say is we are not making 12-06 a requirement. 12-06 is an acceptable approach that we've endorsed –-

MEMBER CORRADINI: I understand that. I understand that.

MR. BOWMAN: –- so if the –- and there's an effort in progress to update 12-06 to provide different guidance for new reactors that we may be able to allow more flexibility there.

MEMBER CORRADINI: Okay, thank you.

MR. REED: So, that's the central Paragraphs B, C, and D. You have the rest of that presentation there. Of course, you have the draft rule language there, also. There, of course, are training, there's drills and exercise requirements, there's a change-control requirement there. There's been some feedback on that, we heard that, we're aware of that.

And then there's some I'll call them EP-related requirements that will be located in Appendix E, so take a look at all that. So, the rule is fairly broad; there's a lot in here. As was mentioned in the beginning, we're addressing quite a few of the different recommendations stemming from the NTTF report.

We can answer any questions on the remaining portions, but for the sake of time we just focused on the three central paragraphs. Also, I would like to mention the fact that we're –- we have an extension until April 30th, so we'll be able to –- I hope to get the full Committee the full package, you know, probably the April time frame, maybe the Subcommittee in that time frame, March-April so you can do –- you know, basically do your job, give you the full package and allow you to write your letter on that, so I wanted to make sure that that's our plan, to bring back the full package.

MEMBER SCHULTZ: Tim, that raises an important point. What is the implementation schedule –- what do you envision the implementation schedule to be associated with the overall program?

MR. REED: Yes, that's –- those requirements you don't see written there. We're

working on them right now. I –- first of all, a lot of this is being implemented right now, so that's the good thing about in terms of it's already been implementing under currently implementing orders.

In terms of the additional requirements we're going to, obviously, look for stakeholder feedback in that regard followed by cumulative effects regulation process. Okay? We're even considering potentially maybe offering a flexible risk-informed scheduling process. I'm trying to work that. Folks here are familiar with the RPI, Risk Prioritization Initiative. The initiative will recognize that idea. I've worked on that in the past, so I'm trying to get that in there, also. So, to make a long answer short, I recognize there's an awful lot on the plates of the licensees out there, and we want to make sure that the implementation period is adjusted accordingly based on what's already on their plate, and we're not distracting, further distracting those resources. So, those aren't written at this time, but that's our mind set on that.

MEMBER SCHULTZ: Can you give me a general framework when you think it would be complete based on the work that you've done, and what you see going forward? Are we talking 2016, end of 2016, end of

2017, or further in time?

MR. REED: Okay. First of all, you still have to work the calendar a little bit and you figure if we make the final rule and give the final rule package to the Commission in December of 2016. Okay? And the Commission takes several months to deliberate, writes an SRM, we make the changes, the rule goes into the Federal Register in 2017, becomes effective sometime the latter part of 2017, then you start, okay, how much time do I give somebody? Nominally, you know, we have to see what the additional requirements are, whether, in fact, those have to be tied to, for example, refueling outages or not, or they can be outside of that. And then I need to factor in the feedback I hear from external stakeholders to see what makes sense. So, I just –- I'd be purely guessing at this point.

MEMBER SCHULTZ: We'll discuss the same with Entergy, because you talked about the implementing strategies that are already moving forward.

MR. REED: Yes. I think the big part in my personal understanding right now would be basically bringing the 1998 SAMGs work forward and updating it to the most –- very good work that's been done by EPRI

and the Owners Groups here recently on the SAMGs, making that basically plant-specific, building it into configuration management program, and reflecting this new equipment from FLEX.

Again, presuming the Commission agrees with that as a requirement, but if that goes in there I think that's the big piece I see right now in terms of what I'd be concerned –- because I believe that's the same set of resources that would be implementing management strategies, at least in my mind. And I think those people are obviously very consumed right now, so right now that's all I know on that. I'd like to hear what the industry has to say about that.

MEMBER SCHULTZ: We will ask. Thank you. Other questions from the Committee?

MEMBER REMPE: On this one with the new reactors, if I look at the text here it seems to indicate a preference for capabilities on site, enhanced associated with the reactor over the FLEX. It doesn't eliminate or preclude FLEX, but it would clearly indicate the way you're doing this assessment and the evaluation that there is a preference for the plant to take care of itself without relying on FLEX that's offsite. Right?

MR. TARTAL: That's the point, is trying to

use more installed equipment.

MEMBER REMPE: Right.

MR. TARTAL: Trying to get the operator away from having to take too many actions, being able to evaluate the plant conditions, take more time to evaluate what's going on and plan for what might be the actions needed to take care of the plant now, and then also to transition to FLEX. It's really to give them more time to think and act.

MEMBER REMPE: Okay.

MR. TARTAL: That's the intent.

MEMBER REMPE: Yes.

MEMBER SCHULTZ: I thought in something that was said regarding the guidance that there are already public meetings ongoing associated with the development of the guidance that would be required. Is that correct, and can you describe where the process is in that regard?

MR. BOWMAN: That's correct. We've had one meeting so far. It was just prior to the meeting with the Subcommittees, the two-day meeting, and I anticipate in January or February we'll be having another meeting. Has not yet been scheduled.

CHAIR STETKAR: Eric, do you have a target date for a draft of the guidance to go out?

MR. BOWMAN: Our target is in conjunction with the --

CHAIR STETKAR: So, you're talking March or April, roughly.

MR. BOWMAN: Right. And I would anticipate that we'd interact with the Committee in conjunction with the proposed rule package.

MEMBER SKILLMAN: Let me ask a question, and it ties to Dr. Corradini's and Dr. Rempe's question. If I'm a clever applicant for a new design and instead of having four diesels I have six, and instead of having three emergency cooling towers I have nine, and I have demonstrated by assessment that I really won't need FLEX for eight years, two months, and fifty-six minutes. Are you still intending that FLEX be part of this scenario? Haven't I proven that with my installed equipment I've done everything that is reasonable and sufficient to protect the containment, to protect the core, and to protect the spent fuel? Isn't there a way for a new design to accommodate self-sufficiency?

MR. TARTAL: I'll let John McKirgan start with that.

MR. McKIRGAN: Thank you. This is John McKirgan for the NRO Staff. The designs that we have

before us now have not achieved that level. I wouldn't preclude it, and certainly we would probably –- again, we're going very far out, we might be in an exemption mode then. But the designs we're looking at now have not reached that level where FLEX is obviated.

I do believe there are some very smart designers out there. If they were to bring something forward to the Staff, we would certainly consider that, but that's not what's before us now. So, I think the current thinking is that the designs that we've seen would –- we would expect them to have that FLEX capability.

MEMBER SCHULTZ: Isn't there an inherent advantage to the FLEX concept that one could apply to any design standard that one would propose? In other words, an advantage to having the FLEX capability that would be useful to have regardless of how robust the design might be?

MR. McKIRGAN: Yes, I think that's the Staff's position.

MEMBER SCHULTZ: Okay.

CHAIR STETKAR: And I also think, and we have to be cognizant of the time here so I'll keep this short. I think it's also important when you're looking at any proposed process for dealing with

accidents that you clearly distinguish between the concepts of redundancy and diversity. And redundancy, putting in 15 identical diesels that are susceptible to the same failure modes doesn't achieve the diversity that you may need from other –- either other design features that are installed in the plant footprint, or the diversity that's brought in from the concepts of FLEX in the sense of portability and different opportunities to use that equipment. So, I think that's an important concept, and that may have different implications on different specific even new reactor designs.

VICE CHAIR RAY: Tim?

MR. REED: Yes, sir.

VICE CHAIR RAY: Could you help me with something I'm still struggling with, which is at what point, if ever, during this process is the status of adequate protection either necessitating FLEX, or resolved by FLEX, or is it just irrelevant to FLEX?

MR. REED: Yes. I mean, this goes back to EA-12-049, the mitigation strategies order. I think the Committee will recall, obviously, that was an order implemented under adequate protection by the Commission as an additional defense-in-depth capability, recognizing uncertainties associated with

beyond-design-basis external events. So, that itself is an adequate protection action, and all of the requirements in my rule that stem from that are already imposed backfits, so they're not –- as long as they stay in that footprint I'm actually stepping out of it. I'm not imposing more backfits, new impositions. So, that's the portion that's adequate protection today. Okay? That was a COMSECY that's going up to –-

VICE CHAIR RAY: Excuse me. I'm interrupting you, I know.

MR. REED: Yes, sir?

VICE CHAIR RAY: I just want to make sure I understand. So, we need to do those things to maintain adequate protection.

MR. REED: That's been –- that's the Commission's position, yes.

VICE CHAIR RAY: Okay. I hope my colleagues don't hear that. We need to do what you described just now in order to maintain adequate protection. Okay, go ahead.

MR. REED: And, of course, as I mentioned, there's a COMSECY that's an agenda item here later today that's up there with the Commission to address whether, in fact, protection at the reevaluated

hazard, whether they affirm that that's the meaning of what we're doing in EA-12-049. So, that extends that adequate protection argument to that.

VICE CHAIR RAY: Yes. So, that's a key part of what we should be thinking about and discussing here.

MR. REED: Absolutely. Absolutely.

MR. BOWMAN: The decision by the Commission that it was insuring continued adequate protection was necessary for the –- by means of EA-12-049 was in SRM -SECY-12-0025.

VICE CHAIR RAY: We have, and the language often references to backfitting, and the Backfitting Rule. The Backfitting Rule includes adequate protection as a –-

MR. REED: Yes.

VICE CHAIR RAY: –- determinate step, and sometimes it's perceived as an alternative, or we have adequate protection already. Now we'll look at whether we should do this under the backfitting, cost-effectiveness rule and so on, so it can get confusing.

MR. REED: It can. I mean, it's a very simple idea. If you have a license and as a regulator I make you do more than what you did –- required when you had the license, I'm backfitting you. And that

regulation then –- you know, back –- 51.09 says here's some ways you don't have to consider cost, here's one way you have to consider cost, so that's a simple way of viewing it.

VICE CHAIR RAY: Right. And I'm just trying to figure out how those two steps in 51.09 are working as we're talking through this.

MR. REED: Yes.

VICE CHAIR RAY: Okay. So, I may ask it again.

MR. REED: Sure.

MR. MOHSENI: Dr. Ray, if I may add. The NRO piece is forward-fitting, so it doesn't fall into that logic.

VICE CHAIR RAY: I do understand that.

MR. REED: Okay.

VICE CHAIR RAY: I'm more concerned about the effect on the existing plants.

MR. REED: Okay.

MEMBER SCHULTZ: With that, Aby, I want to thank you, and I want to thank the Staff for their presentation this morning. And we're going to rapidly move to the industry's first presentation.

MR. PIETRANGELO: Mr. Chairman, good morning. We're really here to talk about the SECY that

went to the Commission on November 21st, not specifically about the rulemaking that you were just discussing; but, obviously, they're not mutually exclusive.

I spoke with this Committee a couple of weeks ago about some of the issues associated with that SECY. We appreciate the opportunity to be back today with members of our Fukushima Response Steering Committee to kind of talk more about how we got to where we are, why we got to where we are. Let me introduce them.

Dave Heacock is the President and Chief Nuclear Officer at Dominion Generation. Joe Pollock is the VP of Nuclear Operations for NEI, and previously was the Site Manager at Indian Point. And Jim Scarola is the Executive Director of our Fukushima Response Steering Committee, so we've been with this issue since March 11th of 2011. And I'm going to turn it over to Jim to kind of start the discussion and conceptually how we got to where we are. Jim.

MR. SCAROLA: Thanks, Tony, and just thank the Committee this morning for allotting us some time to have this discussion. I appreciate some of the key points in the previous interactions here about diversity, about redundancy, and many of the

discussions that you're having now we have debated as an industry quite thoroughly over the last three years.

Following the accident at Fukushima, we formed the Industry Steering Committee, and our objective was really to help prioritize and focus the many lessons that we knew would be coming out of the event itself. And as we look at the history of event analysis, the early years are always focused in on the hardware. And as you get past the hardware, you begin to deal with the more difficult questions, or the behavioral questions that may have led to those weaknesses in defense.

And we've been through that evolution and continue that evolution today as we work. On the Committee we have EPRI represented, we have Chief Nuclear Officers on the Committee from the industry operating plants, and then we also have INPO participate, and all very senior levels.

And what I want to really talk to you today is the background that led us to the mitigating strategies. so, early out in the discussion when we had the news of the event at Fukushima, our –- I think it was about our third meeting we had very healthy discussion about what was the significance of this

event? Was it really about a tsunami, was it about flooding, was it about seismic, the predictability or the errors that may have been made, or assumptions that were made, and what might be the threats, the external threats to that station. And as we went down that path, we stepped back from it and we recognized that, you know, if you start heading down that path it would be easy for operating plants throughout the world to start justifying why lessons out of this event didn't apply to them, whether they were more thorough with their analysis, well, we're not vulnerable to tsunamis, all sorts of reasons to distinguish this event from why it really didn't impact me at my plant.

And we had those same debates here in the U.S. and the U.S. operators located in the middle of the desert. You know, I'm not going to be susceptible to this. Do I go forward with this? I'm high on a mountain, I've got six diesels. And quickly we turned this to, you know, this is an event where the lessons are embedded in an event that overcomes what we had predicted as engineers.

Now, why it had overcome, why it did that is a different question, but we have to make the assumption here that as good as we are as engineers,

there are assumptions that we make in our engineering values, there's assumptions that went into the designs. And we're going to state that the beginning of this lesson is about those assumptions for some reason were flawed in their predictive capability.

Now, that broadened ourselves to the discussion beyond the specific hazards of flooding and seismic. We had discussions about mudslides, we had discussions about manmade threats, we had discussions about meteors, and we quickly came to the focus as an organization that this really should be a look at how do we provide water and power? Because regardless of how the event initiated, it starts to affect reactor safety, public safety when it impacts water and power at the plant. There may be all different initiating events that could get to that threat, but what can we do to think about water and power in a nontraditional manner? And that pushed us into the thought on diversity.

We said okay, you know, I could build the wall higher around the plant. How much higher do you do it? What assumptions will we accumulate now to come up with the new level? And we said, you know, this is traditional thinking, this is further protection of the installed safety trains that we have. Is there a

way that we can come at this question of water and power that is different than what we've done in the past? And this is how we evolved to what is today known as the Mitigating Strategies.

The key aspect of it, it was diverse. So, in order to have the appropriate commitment and buy-in we disabled all the equipment on site. We said the starting point is, I don't care if you have six diesels, I don't care if you have cross-ties among those six diesels, I don't care if it's located on a mountain, you're not going to credit that. We want you to come up with a strategy that is diverse from what you currently have. That will be adding a layer of protection to the public that currently is not in place. So, this is the path and evolution that we have moved down, and we have today being implemented at all the sites throughout the U.S.

Now, it does not ignore protection of installed features. As we continue to become more informed about hazards, we continue to look at that core group of installed equipment and protecting that equipment that is necessary in order to insure that we continue to cool the core and protect the containment, and the fuel pools. So, this is the combination, and I've heard the discussion around the debate, is it

mitigate or protect? And I believe, and the Committee believes that this is not the correct question. It is not that debate. It is both, but it is how you focus the attention and the resources to insure that you're delivering results that matter in a timely fashion for public safety. And this is the path that we are on.

So, for us that prioritization involves a focus on that plant equipment that is necessary in that Phase 1 of the event. It's giving the operators that time to be in the assessment mode, to shore up that equipment to those connection points to make sure that that is, in fact, as protected as reasonable to allow Phase 2 to come into play. So, it's not the either/or, it is both, but it is both with a specific focus.

So, as we have moved through this, we have continued to reevaluate, continued to study the lessons. Last fall we took all the Chief Nuclear Officers in the U.S. over to Japan. We spent time at both Dai-ini and Dai-ichi, and the importance of that was understanding what were the success paths and the success stories that occurred at Dai-ini, as well as what fell short at Dai-ichi.

This caused us again to adjust, but it's the adjustments that we have seen of late are really

better preparing ourselves on the behavioral aspects involved with the lessons. The hardware lessons we have continued to get reaffirming data, and even in the international forum now that this approach to mobile backup that goes beyond the site capabilities. And, again, it's you are strengthening site capabilities during this whole process, but you are adding this additional layer that if the site is overcome for an undefined hazard, you have the capability to still provide that protection when it engages water and power. And that's where we think we are today.

VICE CHAIR RAY: Well, accepting the merits of everything you said as true, if you had the ability by some simple change to increase the flooding level that would –- where the emergency power was protected by a door seal or raising air intake or whatnot, wouldn't you prefer to –- not prefer, I don’t mean that. Wouldn't you do that, notwithstanding the benefits of the mitigating capabilities you're referring to?

MR. SCAROLA: I would very easily say yes, and I’ll ask Dave to jump in because he’s –-

MR. HEACOCK: Yes, that's a great question, and we wrestle that question every day. So, the

reality is we look at our PRA and figure out where the best benefit is to spend that money. Now, if it's taking the diesel in a beyond-design ten to the minus tenth event, or is it replace reactor coolant pump seals. That gives me a Chapter 15 benefit, I'd take the coolant pump seals first to do that.

(Simultaneous speech)

MR. HEACOCK: I guess the question is --

VICE CHAIR RAY: I appreciate that. I'm interrupting just because of time. The question is, are we making it clear enough that that's the intent, what I just asked and what you just affirmed, which is if --

MR. HEACOCK: And I can also --

VICE CHAIR RAY: -- there is a simple fix that would avoid our relying on this diverse excellent suite of equipment that we now have available, and that we all presumably agree with, wouldn't we do it? And how do we make that clear?

MR. HEACOCK: I can address my plants, for example, North Anna we've done the -- the LIP is the big flood issue for us, and we have chosen to do that. We've put barriers on the fuel pump house for the diesels.

VICE CHAIR RAY: Sure.

MR. HEACOCK: Not required because you assume the diesels are gone, but it's a good asset protection logic, to me. So, we have chosen to do that in many cases in our plant because it just –- it's simple to do. It makes good sense, it's not a multi-million dollar project.

Now, raising the flood level of the turbine building, I may choose not to do that.

VICE CHAIR RAY: Allow that to flood.

MR. HEACOCK: That's exactly right. We would make those decisions on a case-by-case basis, and some cases decision –-

VICE CHAIR RAY: Okay. So, at least for me when you hear questions and comments, you know, I'm coming from the standpoint of well, wouldn't you want to do what you just said if you could?

MR. HEACOCK: And we do that. It's not a black and white issue, but the point is we're protecting our Phase 1 equipment, the important safety equipment will be protected, not mitigated.

VICE CHAIR RAY: Thank you.

MR. HEACOCK: Thank you.

MEMBER POWERS: I very much enjoyed your comments and resonate with them, but I wonder if you could address Mr. Skillman's question earlier. Since

we're dealing with new plants here, what if I put in my super plant?

MR. SCAROLA: So, this has been debated in the international forums because there are people in the international forum that said hey, we're putting it all on the hardware side, and bunkered systems. What I would propose is that the –- from my perspective, the answer still comes back to diversity.

I believe that the key to this mission is to have diverse approaches available to your operating staff. I have not lost any confidence in my installed design. It's very robust. I continue to, as new information comes and is available, I continue to make changes to installed equipment along the way. But this has really been the challenge of changing the thinking that we have traditionally done. As our engineers are very quick to move into seal the door around the diesel. That's a no-brainer for them, they're often doing that. But to have them think about a set of mobile equipment being another solution path, and how do you make it that way? That has been the challenge for us as an industry, is to move our thinking style to where we start to say, you know, there are merits in diversity.

So, again, in the new plant design I may

not be looking for, you know, four additional diesels, or eight additional diesels, but I may be looking at a diverse approach to providing --

MEMBER POWERS: Well, that raises the other question. If I'm designing a new plant rather than following Dick's super plant, why don't I make the wimpy plant?

MR. SCAROLA: And I think that that --

MEMBER CORRADINI: Dana, could you repeat that, please?

MEMBER POWERS: Well, Dick posed the question of suppose I've got the super plant that does all things, can survive for eight years as an isolated being, has its own natural gas, well, and everything like that. Enter makes the point even if you do all that thing, humans are fallible and you probably didn't think of everything that could occur, so having diversity is a value. So, I ask the opposite question; suppose I make the wimpy plant because I know I have this diversity here. I come right up to the very edge of the minimum requirement and whatnot to get my capital fabrication cost down, and I rely on this diversity to save me in the event of something that goes beyond the current regulatory design-basis envelope.

MR. SCAROLA: I would like to think that the safety cultures that we have established here in the U.S., and I don't say it's an industry safety culture.

MEMBER POWERS: Let's stay in the U.S.

MR. SCAROLA: That this is what drives us not to do that. Right? Is that the thinking that we have, and it's promulgated, and I give credit to the people long before we came into leadership position in my generation, but it wasn't a minimalistic approach. And we never have in this industry, and I would suggest that that is never going to be a path that would be followed here.

We do drive for excellence in what we do, so I think the wimpy design, I don't see it here. And I don't see that that's what FLEX is about, is an allowance to do less. It was put in place to provide more, not to say we're doing less.

MEMBER BALLINGER: But what Dana is saying is that they'll just abide by the rules. And if the rules are what they are, they'll build a plant in accordance with the rules specifically, and if FLEX is allowed as part of those rules, I'll just follow the rules. And that's, in effect, I don't want to call it the wimpy plant. It's the sort of de minimis plant or

something like that, still plenty safe, but following the rules.

MR. SCAROLA: Certainly, I think that the track record in the industry today shows well beyond the rules, almost on every topic out there. And even these events that we talk about today in the rulemaking initiation of the mitigating strategies was an industry initiative.

MEMBER BALLINGER: This is spite of the financial pressures.

MR. SCAROLA: In spite of the financial pressures. And there's been many a Chief Operating Officer and, you know, CEO that has made it very clear that to the day that they're in this business, this is a business of continuous improvement. It is not a business of minimalistic approach. If you’re in --

MEMBER POWERS: I certainly agree with you on your assessment of the nuclear safety culture. My problem is so many things are run by people from the accounting culture, and the Wall Street culture, and I'm wondering if they may not have a vote here.

MR. SCAROLA: I will tell you that we work very hard as an industry to educate all those --

MEMBER POWERS: Sometimes painfully, by the way.

MEMBER SKILLMAN: I'd like to get back into this conversation. I respect your comments. The hardware fix is normally run parallel with the rate at which decay heat decreases. That's what we found at TMI. Eight months, twelve months, all of a sudden you're out of hardware and you're back into people. My comments are aimed at new plants. And it seems to me that in a country of the resources that we have with the importance of the 21 percent of generation that's driven by nuclear, and hope that there will still be more, that we ought to be able to build plants that are strong and robust.

And to the FLEX, I agree with the concept but I come from the school of having been through a LOCA. And rule number one is, you don't know what you don't know. And Fed Ex might not be able to deliver. And the event that took out the transportation system may have taken out all the bridges, and the only thing that you may have left for the next 60 days is your plant, and what's in close, and what you have been able to maintain effectively.

So, I don't know whether it's 100-hour, or 200, or 500-hours that a batteries, and fuel, and air cooled diesel, and water cooled diesel, and water cooled gas turbine, and the air cooled gas turbine,

but we're smart enough to know how to build a plant that can provide for itself for 30 days, or something like that. And that's all I am saying. I respect the effort of the FLEX for the plants that are currently built, but going forward, getting to Dr. Rempe and Dr. Corradini's question, shouldn't there be a way that a new plant can really be self-sustaining? It seems to me that that was kind of what we were talking about, and there's no reason why we couldn't do that. Just one man's opinion.

MR. SCAROLA: I certainly don't disagree with that, and I think that the attention here on passive systems has, in fact, been moving in that direction. But I also continue to believe that for reasons even beyond the hardware, this system that we have set up of the layered additional support from offsite, and it's a coordinated support, so this isn't a single, you know, person at the other end of the phone waiting to respond. This is an industry response capability that is networked throughout the United States. It's a tight mesh system we put together, and it has been very thoroughly thought out with standard connections, color coding.

MEMBER SKILLMAN: I understand.

MR. SCAROLA: Play books to deliver by,

people to come with it to connect it, and then paletted such that it could be airlifted to the site. So, I don't want that and say well, because you have that you don't focus on passive systems, you don't focus on continuing to increase operator response time allowed, but I believe that what we are setting up here in the mitigating strategies is beneficial going forward with new plants as it is today for the operating fleet.

MEMBER SKILLMAN: Fair enough.

MR. SCAROLA: Thank you.

MEMBER SCHULTZ: James, just an add-on comment, and you can respond. The mitigating strategies rulemaking as we've described, it's now consolidated, and it includes a lot more than just the equipment side of it, which we come to focus on in the discussion here. So, would you speak to the other elements of it in terms of the response capability?

MR. SCAROLA: So, when you start to look at the other elements talking today, some of the procedural aspects, the SAMGs, the integration of the emergency procedures. We are well along on that effort, and I do believe it's appropriate the industry has taken strong actions in that area. As we have written our strategies here for the mitigating

systems, it was an opportunity to reassess the lessons that we see coming out of Fukushima, the strategies that we have had under the SAMGs, and to re-validate or adjust as we thought appropriate. And there have been adjustments being made in those strategies, so this integrated look, not looking at them in separate boxes, but now as you start to bring all these initiatives back together, we feel it's appropriate to bring them back together and make sure that we mesh them correctly.

MR. HEACOCK: If I could add one thing. North Anna 2 was the first operating plant in the United States where my plan is to be in full compliance with the mitigating strategies order, so we've had the opportunity to do all that. It's done at North Anna. The equipment is on site, the connections are done, the training has been done, the procedures are in place.

What we found is additional enhancements. When you run people through this process to expose them to beyond-design-basis events and add additional capability at the plant, which we have done cross-ties and ability to shed load, and ability to provide backup diesels or backup generators along various stages of the system, it provides operating benefit,

as well. So we've added tremendous capability. I walk in the control room in my plants and the Shift Manager pulls out a sheet to say let me show you what we've got here. We have this capability here to do this, right from this room. I can go back here and shed load, I can hook a portable generator up, I can power my vital safety equipment for days and days and days on a small amount of gasoline.

So, all those benefits are here today and we can use those at many plants. We have about eight or ten plants that are in full compliance this fall. I saw it at North Anna, I saw the benefits of not just beyond-design-basis scenarios, but many, many potential scenarios.

MEMBER SCHULTZ: Thank you, Dave. We're on Slide 1 of the presentation. Thank you for your discussion, that was very helpful.

MR. POLLOCK: Thanks. The slide you see before you is the proposed revision. Eric talked about earlier a revision to 12-06 we're proposing. In that revision is to conclude the discussion on integrated assessment and how you would take that new hazard information, in this case flood hazard information, and how you would walk through a systematic approach to make the decision on how you would respond to that

new information. So, I'm going to walk through these pretty quickly.

It all starts with updated hazard information. And the updated information is based on a source of this credit, the NRC letter requesting information, a rulemaking, information comes out that's been vetted through the process and requires a response.

This doesn't take away from the Corrective Action System that all the sites have today when new information comes into the system that respond but this is the higher level where you're doing a complete hazard type of re-evaluation.

So, the first thing you would look at in the new hazard information, the information is specific to the plant. As Jim talked earlier, when we designed mitigating strategies we picked a hypothetical event with a hypothetical result. The hypothetical results were you lost all AC power and the capabilities of having cooling. So, that was what we decided to do.

In this case you would have a known hazard, flooding, and you'll have a known result from your hazard assessment of what the new impact is to the site. And there's been a lot of discussions on

integrated assessments or not, but in order to implement mitigating strategies you have to understand what happens to your installed equipment on the site, as well as how you would deploy mitigating strategies. They are not separate activities.

If you go to the next slide, which I'll refer to as Box 1, the first thing you're going to do is compare the results of your new analysis, hazard analysis to your existing design and see if you're bounded. If you are bounded by your existing design, you have answered the question that by your design you are protected. You can implement mitigating strategies still because all your installed design equipment is protected; therefore, your mitigating strategies will be able to go forward. You're done. You would document that, conduct that review, submit it to the NRC for review and approval, and that would complete that action.

If you go to Box 2, Box 2 is it's not bounded and it can be not bounded in many different ways. There's –- as you are well aware in the flooding hazard analysis there's many separate aspects that end up combining into a complete picture of what the maximum level would be, but any individual one could be outside the bounding of your current design basis

that you would have to address. Either you were silent in your design about a hazard, or it wasn't bounded.

In order for you to make the conclusion that mitigating strategies would still work, the first thing you have to do is be able to say the protected equipment, the installed permanent plant equipment that I was counting on in the mitigating strategies is unaffected. So, that means all my systems that I was connecting through, your electrical distribution, batteries, et cetera that I was counting on, you have to be able to validate that they are not impacted by the new hazard information.

And then you look at the mitigating strategy component where you are going to be storing equipment and moving equipment to connect. You have to look at that to say that my road is not flooded out, so where I was going to pull this motor or pump down, I can still do it. My connection point is not under water somehow that would preclude me to do that. If your conclusion at the end is my Phase 1 equipment, which is my installed permanent plant equipment, is still protected and I can implement my mitigating strategies in accordance with the submittal I had provided the NRC and they have reviewed and approved, then I would document that, submit it to the NRC for

review and approval, and I would complete that.

VICE CHAIR RAY: Why doesn't that make the mitigating strategies part of the design? In other words, if you're going to take that Yes branch, what's the difference between relying on the mitigating strategies to put you in the Yes branch, and saying that the mitigating strategies are now part of the design?

MR. HEACOCK: I could address that a bit. We've been looking at this very issue and the reality is the assumptions made to get this new hazard are beyond-design-basis, so you have assumptions created that create a new design beyond your current design basis, but not part of the design-basis.

VICE CHAIR RAY: Well, I'm talking about the mitigating strategies themselves, which enable you to say that we can arrive at the Safe Box there at the bottom. I'm trying to distinguish between those mitigating strategies and the design, not talking about the design-basis hazard, I'm talking about the plant design.

MR. PIETRANGELO: You may enhance your plant design for that permanent plant equipment that you take credit for in Phase 1 of mitigating strategies, turbine-driven auxiliary feedwater pump,

condensate storage tank, or RCIC system, et cetera, the batteries. So, you could change the design in terms of the protection features associated with this to buy you enough time to get to Phase 2 with the portable equipment.

MR. SCAROLA: And, in fact, all those connection points are done with design changes to the power plant.

VICE CHAIR RAY: Absolutely.

MR. SCAROLA: Right.

VICE CHAIR RAY: Correct. I'm just trying to understand why we don't then say well, I modified the plant design so that now it'll –- I think the answer turns out, Tony, to be because at least under certain scenarios we're mitigating an event that we don't want to include as part of the design basis.

MR. PIETRANGELO: Basis, because it's a beyond-design-basis event.

VICE CHAIR RAY: I know, but I'm trying to understand why we don't enlarge the design-basis by virtue of having the mitigating strategies.

MR. PIETRANGELO: You're enlarging the licensing basis of the plant.

MEMBER RICCARDELLA: You know, I don't fully understand the flooding aspect, but I know for

seismic the redefined hazards that are coming out of 2.1 are based on essentially the same probability or frequency of occurrence as the SSE, the original SSE. And given that --

MR. HEACOCK: That's not true for flooding.

MR. PIETRANGELO: Pardon me?

MR. HEACOCK: That's not true for flooding, it's different.

MR. PIETRANGELO: Okay. But, you know, how would we say that's beyond-design-basis if it's the same frequency of occurrence as the original SSE?

MR. HEACOCK: Yes, the flooding assumptions are much more severe than the original design-basis were and very conservative. For example, you've got 29 inches of rain in six hours and you have to assume all your drains were plugged up. So, you have other assumptions that didn't exist during original design-basis and don't in reality exist concurrently.

CHAIR STETKAR: David, but it's always easy to flop back over. Back with Pete, this process, this philosophy should apply regardless of the hazard. Jim made a really good approach that we as engineers tend not to -- we tend to think compartmentalized. So, I'm trying to pull you back and say if this -- you address it from floods. The same thought process ought to

apply to seismic, so if I have re-evaluated my –- pick a frequency, ten to the minus four exceedance frequency hazard for my site and it's now twice the peak ground acceleration that it used to be, how does this thought process apply to that situation, because the same philosophy should apply for floods, which we can’t assign a frequency to –-

MR. HEACOCK: They've done some work at the risk probability of floods which is not very well developed theory, but if you did you'd find that these are way beyond design-basis –-

CHAIR STETKAR: Please don't talk about floods. I want to talk about the seismic example because the same philosophy applies for the seismic. Don't talk about floods, please.

MR. SCAROLA: I think we can clearly state on the seismic, this is the expedited approach to seismic, is focused on the same core set of equipment installed –-

(Simultaneous speech)

MR. SCAROLA: –- that is robust to the new information on seismic to insure that we can maintain the core cooling.

CHAIR STETKAR: Do you protect it against the redefined seismic hazard, or do you protect it

against 10 years ago seismic hazard? Which one do you protect it against? And I won't use yesterday or tomorrow. Which one do you protect it against to transfer in that Yes direction.

MR. POLLOCK: Currently we protect it to two times the SSE. That was what we did --

CHAIR STETKAR: Two times the 10 years ago SSE.

MR. POLLOCK: Two times the 10 years ago SSE because we were moving forward before we had results from the --

CHAIR STETKAR: And my example is though we understand that the ten to the minus four SSE is at that two times value, or maybe two and a half times.

MEMBER RICCARDELLA: There are a few plants where it's three times.

(Simultaneous speech)

MR. HEACOCK: North Anna, for example, is one of those plants and we have evaluated using the SEP process the Phase 1 FLEX equipment installed, aux feedwater pump, the flow path to the steam generators, the steam vent path. We've evaluated that path for the ESEP enhanced hazard, the new hazard.

CHAIR STETKAR: You have.

MR. HEACOCK: We have.

CHAIR STETKAR: Okay.

MR. HEACOCK: It went beyond the two times SSE for our plant evaluated to the new hazards.

CHAIR STETKAR: But we're aware of some plants that haven't taken that approach.

MR. HEACOCK: That's right.

CHAIR STETKAR: They've taken the approach to only look at two times the ten years ago let's call it SSE.

MR. POLLOCK: And remember the reason we did two times is we were doing it before we had results. Right? So, we're going to go back and we're looking as we go back, this would apply. What doesn't show up on this chart is the methodologies that you would have to employ to determine the margins required.

MEMBER RICCARDELLA: But my question is I think more fundamental than that. The new ground motion response spectra, do you consider those design-basis or beyond-design-basis?

MR. POLLOCK: Beyond.

MR. PIETRANGELO: But they're the same probability --

MR. POLLOCK: You're designed to a different earthquake than those plants were licensed

to in the design-basis --

VICE CHAIR RAY: The probability wasn't the basis on which we licensed the plant.

MR. PIETRANGELO: That's correct.

VICE CHAIR RAY: It was the response spectrum, which is Tony talking about. And that's why you would still say it's beyond the design. It wasn't licensed to a probability, it was maximum credible was the language that was used.

PARTICIPANT: Deterministic.

VICE CHAIR RAY: And so later it was equated to a probability, and now that probability produces a larger response spectrum, but the design-basis is still what it always was; that is, a ground acceleration spectrum, so I think that's what they're trying to say.

MR. HEACOCK: At one point here we found in practice at North Anna because we had the two and a half times design-basis earthquake, and the calculations both validate that there's tremendous margin in the plant, so that’s --

PARTICIPANT: I appreciate that.

MR. HEACOCK: -- potentially a difference between seismic and other characteristics. For flood, you know, once you exceed the limit that’s a --

PARTICIPANT: Cliff edge.

MR. HEACOCK: –- cliff edge. Exactly.

MEMBER BALLINGER: When I look at Boxes 1 and 2, and then read the green cloud, I see Box 1A and 2 because perform an integrated assessment. Bingo, that's always been –- that's the requirement. But where the deviation occurs is now we take and we're going to apply the mitigating strategies as part of the response to the integrated assessment. Right?

MR. PIETRANGELO: That's correct.

MEMBER BALLINGER: But that's not what that —-I mean, that's fuzzy to me there. That's what I think, there should be a 1A there, do the integrated assessment. And then Box 2 is apply the –-

MR. PIETRANGELO: No, but you can't do it mutually exclusive like that.

MEMBER BALLINGER: I know, but with the gedankenexperiment I can –-

(Laughter)

MR. POLLOCK: The other thing is that although I drew these in a line so they look like a flow chart, the realities are you can move to any box because one of the discussions we've had on this is if I decide to put protection up on these two doors, then do I go back to Box 1, or do –- you know, if it’s a

design change in accordance with design, now I need the design. So, it’s –- they’re very fluid.

MEMBER BALLINGER: Now, you are –-

MR. POLLOCK: Yes, they're very fluid. You know, you're going to move back and forth.

VICE CHAIR RAY: Yes. Well, that was the nature of my question. If you add some capability, why don't we consider that a change in the design rather than something that’s part of the –-

MR. POLLOCK: If you're modifying the plant you are changing your plant, at least the licensing is the middle, and the design characteristics of your plant. Right? So, if I put up on a flood gate, or I put up –- build a wall in that plant, I have to do it to all of my requirements to install anything in the plant. It doesn't –- you know, it's not separate from that.

MEMBER SCHULTZ: I'm glad you said it that way, Joe. I think Jim would come back and say I'm still interested in diversity and flexibility.

PARTICIPANT: We still need FLEX.

MEMBER SCHULTZ: Focused on the design-basis, I'm focused on what I need to do, and how I'm going to do it given the circumstances I'm confronted with.

MEMBER RICCARDELLA: You talk about this –- I'm going to talk a little about the integrated assessment. There' existing Staff Guidance on how to perform an integrated assessment. Are you proposing that you –- that these integrated assessments would comply with that guidance?

MR. POLLOCK: No. What we're proposing is, is it would be focused on the mitigating strategy aspects on how to do it. The Staff's integrated guidance on the flooding is whole plant, the whole site is to do the integrated assessment. What we're suggesting is the focus would be success pass fail to get through your protect the core, protect the containment, and make up the spent fuel pool.

MEMBER RICCARDELLA: But the Staff Guidance doesn't rule out the use of mitigating strategies, as I read it.

PARTICIPANT: It allows it.

MEMBER RICCARDELLA: It allows the –- you to address the mitigating strategies, but it says it wants you to assess your existing equipment kind of with and without the mitigating strategies, the way I view it.

MR. POLLOCK: Staff Guidance doesn't do it in accordance with 12-06, so the implementation of the

FLEX that's being done now and all that is not in accordance with the flooding Staff Guidance. It's in accordance with 12-06.

MEMBER CORRADINI: Could you repeat that again? I don't appreciate that. I'm sorry.

MR. POLLOCK: The guidance in 12-06, although we didn't call it an integrated assessment had many aspects of the same thing. You had to evaluate the hazards, you had to make your connections, you had to take into consideration the current design flood, so you had a path to go and your connection is above. So, you had to go through all that, and then you had to validate that I could do it in the time frame required. So, when I laid the plan, and I know we had industry in presenting to you how their plan works in the site, so they went from time zero in an ELAP event and how they would sequence implementation. You had to validate all that, you had to go through a verification that you could implement that in the time with the resources you had allowed.

In the flooding event with all but one or two sites this is a very slow moving event. It doesn't happen immediately at time zero, and a couple of sites were dam breaks, and it's very short time, but the remainder of the sites are usually multi-day events.

The exception is the LIP event which is the local intense precipitation where we're having a very high volume, as Dave said, of 30 inches in six hours with all your drains clogged so you can't take –- that's a shorter one, and that's the more challenging one. But the integrated assessment in the flooding does not accept the mitigating strategies in FLEX as the response.

MEMBER CORRADINI: And I heard it, and again I’m –- it doesn’t take into account flood.

MR. POLLOCK: It allows for mitigating strategies in flooding. However, the methodologies that were employed in 12-06 that we're currently using and we're codifying are not acceptable to be used as a basis for the integrated assessments in flooding. And that's where we're looking to be more focused and not change requirements on something that's installed, move forward. And which, in fact, would stop us from moving forward if you went back and you had to go back and change was the requirements were for the same components and strategies you have today.

MEMBER CORRADINI: So, if I might ask, I look at my colleagues. So, if I'm the only one that doesn't understand what you just said, I'll be quiet and they'll explain it to me later, but I'm still a

little fuzzy.

MR. POLLOCK: Okay, so --

CHAIR STETKAR: Let me try something, and we have to be, by the way, cognizant of the time because this is a full Committee meeting, and at 10:30 we have to stop. We have to hold to our schedules at full Committee. We don't have the flexibility.

I hear what you're saying, but I also heard what David said, and I heard what Harold said earlier, and that is shouldn't we be looking at, for these reevaluated hazards, I won't get into frequency arguments here, the opportunity to install -- I think Harold used relatively inexpensive, I'll not put money on it, efficient ways to protect existing plant equipment against those hazards. Shouldn't we be thinking about that first?

VICE CHAIR RAY: And calling it a change in design.

CHAIR STETKAR: I'm not -- Harold, I don't want to get into that discussion. Shouldn't we first be looking at those opportunities and see if, indeed, we can protect a larger footprint of that equipment before we then take into credit -- into consideration mitigating strategies, the FLEX?

David said well, at their plant even

though they didn't have to do it, of course, they sealed those doors because that seemed to be the good thing to do. What I hear you saying is no, we're just going to give up on that, and as long as the mitigating strategies can protect me, that's good enough.

(Simultaneous speech)

CHAIR STETKAR: So, I want to see how the approach under 12-06 forces me as an owner to think consistently about can –- do I have the opportunity to protect my plant equipment against that re-evaluated hazard?

MR. POLLOCK: So, this is a step back out of 12-06 from a fundamental operational approach that we have in the U.S. You would protect your plant if it was an uncomplicated –- I'll drop the cost, but an uncomplicated modification of putting things off to protect your plant. The first thing that's always required for us is to protect the health and safety of the public. That never goes away from us. The second thing is if you can protect your asset on top of that by doing these protection features, minor change, you're absolutely going to do that.

CHAIR STETKAR: But how does your approach tell me that I ought to look at that?

MEMBER BLEY: Remind you.

CHAIR STETKAR: Remind me. I'm sorry. That's a better way to put it. Remind me that I ought to do that first, rather than saying I ticked off all the boxes, and according to this methodology I have the bare minimum that I need to satisfy these particular requirements.

MR. POLLOCK: We are only here if we have the highest level worst case scenario of our evaluation. I won't tell you what is the probability of that event, but when we're there. That is not how we make the decisions on how to respond to the analysis, and a document here walks you through how you would approach it. And when you get to Box 4 where you couldn't do mitigating strategies in design, you're going to have to come back with a combination of either modifications to the facilities' protections, change items so that you could still have that safety path to go forward.

MR. SCAROLA: I think to a large extent, and I hear the discussion here, we're looking for a way in which we can draw a line and force a safety culture in an organization. And I think that that's a very difficult thing to define clear enough. We want to carve out this particular area and say well, you

can evaluate the whole plant and let's talk about a door seal, and all of us can come to the same conclusion, put the door seal in. All right? You regulate that.

Well, I'm not worried, if you didn't make the decision on the door seal, I'm not worried about the door seal. I'm worried about the thousand other things that you're making a decision on every darned day at that power plant. That's safety culture.

What we're talking about here is the way to focus the attention and the resources on those areas that we know will add that diverse layer of defense and public safety at the earliest opportunity. It isn't that we say hey, wouldn't it be nice to evaluate and know how it affects the whole plant? Certainly, it would be nice, but the reality is that both this agency and the industry have a lot of technical resources that are going through these evaluations, and we try to focus that attention on that area that provides the earliest benefit to the public.

VICE CHAIR RAY: Okay. Look, time is a problem. I'm going to be real short, but I have to respond to what you just said. It's not just about us, it's also about what people understand that we're

doing.

MR. SCAROLA: I understand.

VICE CHAIR RAY: And if you do something, my original question, slight variant of what John asked but I endorse his comment, as well. Why don't we take credit for having changed the design? Why don't we deliberately do, as David has done, and say we've improved the design, and take credit even for mitigating strategies in that regard, instead of saying oh, if we exceed our design basis, and the consequence is we lose AC power, we'll mitigate that with this other stuff that we've described. So, it's a matter not just of culture as we understand it, it's how everybody else understands what we're doing, as well. Put yourself in our position.

MR. SCAROLA: And, Harold, I think we are changing the design, but we're not changing the design-basis. We've never invalidated the original design-basis through this.

VICE CHAIR RAY: I don't want to get into semantics, but in any event I'm just saying, we're talking about the design-basis, we're not going to touch it. We're just going to mitigate when we exceed it, and I'm not sure that's the best way to think about this, but you should go on.

MR. SCAROLA: Okay.

MEMBER REMPE: Before you do, could I just ask a real blunt question. If you exceed the safe shutdown earthquake by a factor of three would a plant automatically beef up the equipment to accommodate that, or would they say no, I can rely on some offsite stuff?

MR. PIETRANGELO: You would have to do a seismic PRA. Those are all the Group 1 plants that you just mentioned. They'll get the results in 2017. In the interim, we're doing the expedited evaluation, an SSE two times the original --

MEMBER REMPE: But if it's three instead of two, maybe --

MR. PIETRANGELO: Dave's case they went higher because it was 2.5.

MEMBER REMPE: Okay, 2.5. Are you beefing up the -- would every plant have to beef up more than a factor of two?

MR. HEACOCK: Great question. I'll just tell you our case, an example at North Anna. No mods required.

MEMBER REMPE: And every plant will go through that evaluation and if there is a mod required they will do it. They wouldn't say no, I'm going to

rely on the offsite stuff.

MR. HEACOCK: That's correct. If they identify a mod is required, they're going to fix that to withstand two times the --

MR. PIETRANGELO: To the Phase 1 equipment. It's the same equipment we're talking about for flooding, is what you need for power and water to cool the core, the spent fuel pool, and protect containment. That's the core equipment we're talking about in Phase 1 whether it's flooding, whether it's seismic, whether it's hurricanes, whether it's tornados, terrorist attack, manufacturing defect, operator error. That's what you need.

MEMBER RICCARDELLA: There are a lot of margins in the original -- there are -- the original seismic evaluations were all linear.

MR. PIETRANGELO: Right.

MEMBER RICCARDELLA: And as the loads go up you go non-linear, you change your damping, so there's a lot -- chances are you won't have to modify a lot of equipment because --

MEMBER REMPE: But they would do it if they saw it.

MR. POLLOCK: Almost all. I can't say all, but it's pretty close to all of them are in the first

group, the ones that are exceeding the two times, so they're required to do that SPRA. And as a result of that SPRA they would require to do any modifications that would be identified that came out of that.

MEMBER REMPE: Okay. Go on, thanks.

MEMBER SKILLMAN: I would just like to make one comment. It seems like so much of the passion over this issue becomes centered around the debate of what is the design-basis, and what can be changed for design-basis. But the kind of things you're talking there are changing your engineering design-basis which is a much larger envelope. Why can't we find a way to take credit for changes to engineering design-basis and advertise those, and at least for the time being leave the licensing design-basis alone? If you're putting in layers of protection, if you're putting in diversity and redundancy, if you're really changing your core damage frequency to a measurable extent that is beneficial, then why isn't the industry saying here is how we're changing our engineering design-basis even though we're leaving our licensing basis alone.

MR. HEACOCK: Great question. I think an interesting point you brought is that we're not really changing our core damage frequency. The reality is if it was a beyond-design-basis event which has extremely

low probability of occurrence, so the initiating event has such a low probability that any modifications you do are in the dust and don't show up on your core damage frequency. So, back to my original point is, we're spending money, and energy and time on things that have virtually no safety impact.

MR. MITMAN: My name is Jeff Mitman. I'm a Risk Analysis with the Office of NRR. That's probably true for most plants, probably true for most plants. It is not true for all plants in flooding, and we shouldn't lose track of that. There are plants out there that have high frequency flood events, and by painting the whole industry as a very rare event is disingenuous. Okay? Unfortunately, we don't even know the frequency of flood events because of the characteristics involved, and it's a very controversial area. But it's not true that all flood events are rare.

And a second point to be made is that for some plants the design-basis at one-half the design-basis flood elevation, the ECCS and the electrical distribution under water, so we're not talking about protecting the ECCS so it can address and protect the plant from a design-basis flood. There are floods out there that will make the ECCS under water, it will

disable the containment, and you're left with nothing but FLEX. FLEX is a great strategy for a layer on top of the existing design, but it's not appropriate, in my opinion, to be the only line of defense for an event that's not rare.

MR. SCAROLA: I appreciate that comment, and I think that if we present in a manner to take FLEX as the only answer to all plants, certainly that's not the case.

We know that there are plants as a small subset that have, in fact, taken action because they found errors or assumptions that were invalid in their original design, and they are going and correcting that. And they are doing that in the appropriate licensing basis changes, and the appropriate oversight from the regulatory body. So those, though, are not Fukushima lessons, and what we talk about here is we are promulgating all this action on an expedited approach as lessons from Fukushima. To bring those plants in and say hey, these are Fukushima lessons would be inappropriate, and we're not suggesting that that's what the action is on all plants. There are plants that certainly their flooding probability because of various reasons is different than those that we talk about for these extreme conditions on the

majority of the plants.

And I hear the message on the way in which we are communicating engineering basis change, design basis change, licensing, and this has been a challenge for us, so I respect and value the feedback that you're giving us. We still don't have it right in terms of how we characterize this, but we are protecting installed equipment. We're focusing that protection on that that provides the greatest benefit, and it's the strategy to keep that core cooled. All right? So, that's what the difference is in the proposals. It's cast a wide net or focus the efforts, and right now we're trying to keep ourselves focused. Thank you very much.

MEMBER SCHULTZ: Joe, you're staying?

MR. POLLOCK: I'm staying.

MEMBER SCHULTZ: And we have two members that are coming up for the second presentation.

MR. POLLOCK: Yes, they had a specific example to walk through.

MEMBER SCHULTZ: I'd like them to come up while you're returning to the slides.

MR. POLLOCK: Sure.

MEMBER SCHULTZ: I know that the –-

CHAIR STETKAR: Anyone listening in, the

presenters had to truncate their presentation because they have another really important meeting that they have to attend that is beginning now.

MEMBER SCHULTZ: Joe is the main presenter here, and he's going to move forward with his presentation. And this melds into the example presentation, as well, so if you go through your slides it will set us up for the example. You should go through those quickly because –-

MR. POLLOCK: Yes, thank you. I'll try to move forward.

MEMBER SCHULTZ: –- there’s related and important points in the example we want to get to before 10:30.

MR. POLLOCK: Yes, Box 3 is the –- again, since many of the flooding concerns at the plants are very slow moving, in essence. You know, when you take out –- I'm not talking about plants that have a dam upstream, and there's only a couple of those, but most of them require hurricane, Noreasters, rain for several days, then additional rain on top of it, so it's something that the plant can react to fairly quickly, you know. And they have time to get there, so it's not starting at time zero where all the water comes to that site level.

So, the next question you would ask if I had the time warning, could I implement that? And the example I would use is though some of the site becomes flooded but the principal buildings are still protected, so where I was going to pull my equipment down, I have to move that ahead of time and pre-stage it at a location. I don't know how many plants this would apply, but that would be also a condition you would go through. And once you validated your permanently installed equipment is protected and you had the means to hook up your mitigating strategies, you would document that and submit it.

The next one is where it starts to change somewhat, because now some aspect of your installed Phase 1 equipment that you are going to utilize for FLEX installation is not available. It's been impacted by the new hazard assessment. So, in this case you would have to go back and develop a new mitigating strategy similar to that where you would add either modifications, additional protection so that –- I'll give you a for instance. If you were to lose batteries in the flooding event, you would go back and figure out how I protect them because I couldn't implement mitigating strategies without the capabilities of batteries, so this is sort of –- when I said these are

–- although I have them sequenced, this is where you would do modifications and additional protections to be able to demonstrate I would have a train to go through available to protect the equipment and still protect the core, the containment, and the spent fuel pool. So, this would be a combination of modification, and it would also be the opportunity to use installed equipment that wasn't affected.

When we did mitigating strategies we said you lost all AC power. When you do the specific flood hazard you may find that all of your emergency diesel generators are high and dry, and they're not impacted by this, so it would give you a more reliable source to utilize.

The operators in our emergency operating procedures always go progressively from installed equipment, and then you get to the FLEX equipment, so any time you would have available installed equipment to utilize, you would utilize that. So, if I had emergency diesel generators, I would be utilizing emergency diesel generators to power up equipment.

MEMBER CORRADINI: But the way your diagram shows, I interpret that as the Option or Box 5, what you just said.

MR. POLLOCK: Well, Box 5 is what I would

describe is for the wet sites, there are sites here that was discussed, where the FLEX, there's not permanent equipment left to install. There are sites out there where they're at the high flood levels that we experienced in Nebraska. Their flood level, if you have the ultimate flood for them, the Missouri River becomes 18 feet high and 50 feet deep, so they have a scenario where they still have to protect the core and the spent fuel pool. So, they have a methodology to be able to make up, remove heat, and protect the core if they were to do that. You no longer have site Phase 1 equipment that you're going to be utilizing FLEX for.

MEMBER CORRADINI: Okay.

MR. POLLOCK: Which would be Box 5. And that's where we called a target hazard mitigation strategies where you would have to go and demonstrate that you have the capabilities throughout the event. Because an event of that severe in nature is not a short-term event, it would be multiple days so you would have to be able to demonstrate you could maintain cooling and make up the spent fuel pool as the event moved up. And then you would have to demonstrate you could maintain that cooling as the levels drop back down until you got into a recovery. And that would be in the target hazard mitigation.

So that was trying to walk through that, and I recognize there's a lot on the slide, and there's a lot that's not on the slide. And your example, 1A, well, our team has come up with four, Alpha, Bravo, Charlie, Delta in order to be able to try to describe that. So, there is a lot in between that, but the fundamental for all mitigating strategy is our installed permanent equipment has to be able to be protected so that you can implement mitigating strategies. You cannot do that, and if there was uncomplicated modifications we would do that as the very nature, whether you were doing it for FLEX or anything else and going through. It becomes more complicated when, as Jim talked about, do I have a 10-foot wall, do I add two more feet to a 10-foot wall? Is that good enough? And I rely now on that two more feet on the wall until the next hazard evaluation.

MEMBER CORRADINI: So, just as a prelude, so instead of asking a question that we could expect the example will help illuminate what you think of an integrated assessment versus what Staff originally anticipated. I'm still struggling as to the difference. I'm back at Pete's original question, and I'm –- so, is the example going to help us there?

MR. POLLOCK: Yes.

MEMBER CORRADINI: Okay.

MEMBER RICCARDELLA: The question is how integrated is integrated?

MEMBER BALLINGER: I'm looking at the ISG now. Right? And there's a paragraph in there, and I won't read the whole thing, but it says, "In light of the re-evaluated hazard, the integrated assessment will," and it goes one, two, three. But three is, "Assess the effectiveness of existing or planned systems and procedures for protecting against and mitigating consequences of the entire –- for the entire duration of the flood event," period.

MR. POLLOCK: Correct, and then you would go to the appendices that would tell you how to do that.

MEMBER BALLINGER: Yes, but it's in there.

MR. POLLOCK: Yes.

MEMBER RICCARDELLA: It certainly doesn't rule out the use of mitigating strategies.

MEMBER BALLINGER: Yes, it doesn't rule out the use of mitigating strategies.

MR. POLLOCK: Yes. But, again, I would tell you, you go to the appendix, and the requirements for mitigating strategies in the appendix are not the same requirements for 12-06.

MEMBER BALLINGER: Okay, but 12-06 is not the ruling –- not the controlling document. Right?

MR. POLLOCK: It is a controlling document. It is right now, that’s what we’re –-

PARTICIPANT: It's been endorsed.

MEMBER BALLINGER: All right.

MEMBER SCHULTZ: Joe, if you'll stay at the table that will be helpful for us. We may come back to you after we hear from the example, but the example is going to use the same approach framework to move forward. Scott, let's get to that presentation.

MR. BAUER: Okay. Well, last –- two weeks ago we were in here and we talked –- we had the same cast here, and we mentioned –- I’m Scott Bauer from NEI. I'm the Project Manager for FLEX implementation, and we've been following along with this. When the new flood evaluation, we knew from the beginning that when new flood results and seismic results came in, we were going to have to reconcile with the FLEX implementation.

So, what Joe went through was basically the process that we believe is correct that basically implements what the COMSECY is suggesting. So, we talked about the method, and now we're going to basically walk through an example for one of the

plants as to what that method would look like, so what would –- so, two weeks ago, Bill sat here and basically showed you how North Anna implemented this for them, and now he's going to talk about their example of here's our re-evaluated flood hazard. Here's how we would go back and using that chart that Joe just walked through, how we would analyze which column we were in, and what actions we are taking to basically do the integrated assessment to say how I will deal with the re-evaluated flood hazard. So with that, I will turn it over to Bill.

MEMBER SCHULTZ: Thank you, Scott.

MR. WEBSTER: All right. I appreciate the opportunity to represent this. For Dominion, we have gone through part of the reevaluation. We got results. We are in the integrated assessment process. I think the philosophy of the integrated assessment is similar. I think some of the details and the requirements might be what's different about the approach we're taking here. And I think as mentioned earlier, it's more focused on those pieces of equipment that would prevent the –- that maintain core cooling rather than just any piece of equipment in the plant.

So, in the 12-06 assessment, I guess we

want to call it that, for FLEX we had an undefined hazard. We assumed, as stated earlier, that we initially had a loss of all AC power, we're unable to use that in any case because the hazard was undefined. And then we develop mitigating strategies based on those conditions.

In the re-evaluated flood hazard, you know, the hazards are more defined. We re-evaluated them, we have better information. So, therefore, when we are looking at developing our strategies we may not necessarily assume that we've lost all AC power if we can show in the sequence of events and the hazard details that, indeed, some of the power may still be there.

Now, that may not be always the case. Certainly, there's margin to play in that, but if it's clear that there's a piece of equipment that we can protect and it's available, we're going to use that as part of the basis of our overall strategy. And then we'll develop those strategies with those known conditions.

For Dominion site, I think Dave Heacock has stated earlier that our hazard that wasn't evaluated or was higher than original design-basis was the local intense precipitation, 29 inches in six

hours, no storm drains cause quite a bit of problems in the site as far as the accumulation of water. Albeit, the water accumulation was only for a limited period of time; in other words, the peak was about an hour duration, so we had to consider that peak, two to three foot of water, and how it migrated into various areas in the plant.

MEMBER RICCARDELLA: Excuse me.

MR. BAUER: Yes?

MEMBER RICCARDELLA: Why do you have to make the assumption of the no storm drain?

MR. BAUER: Well, that's just –- and we did the evaluation, that's –- you know, if you –- it’s just one of the requirements for doing the evaluation. We could have, in fact, assumed some storm drains, but the storm drains are really a small –- would be a small portion. I know that the –-

(Simultaneous speech)

MR. BAUER: –- it wouldn’t help a lot. It helps some, but it wouldn't help a lot.

MEMBER BALLINGER: Can I ask a really dumb question?

MR. WEBSTER: Sure.

MEMBER BALLINGER: Where the heck did the 29 inches of rain in six hours come from? I have –-

the world's most intense rainfall is 600 inches per year. I've been where that occurs. That's in a year.

MR. WEBSTER: We used the information from the NUREG on how to evaluate this, and HMR 51.52 report, that's where the information comes from.

MEMBER BALLINGER: All right.

PARTICIPANT: So, you're going to go look --

MEMBER BALLINGER: I've got to go look at HMR 51.52.

MR. WEBSTER: And I think as was stated earlier, in some cases -- again, in some cases the events we're evaluating are clearly very improbable events. So, we did a preliminary flood hazard evaluation based on the amount of water accumulated, saw where the water would go in various buildings, and we determined that this flood would, in fact, impact multiple areas in the site.

So, looking at this chart for our example we, of course, determined that we had an event that was beyond the original design-basis, so this would be no. We moved in here and said can our current mitigation strategy deal with it, and the answer was no, because the areas of the plant that were affected, affected some of my Phase 1 equipment, so that was no.

I looked at do I have adequate warning time to take actions that would prevent or give me additional actions I could take, the answer was no. So, I ended up here in Column 4, and that's where I currently am doing an assessment to determine what a mitigating strategy would look like for our Dominion site.

Again, this is preliminary information. We haven't actually finalized it, but we have our direction that we're headed into.

MEMBER SKILLMAN: Bill, for this type of event, can you give us an appreciation for the time it would take to go from Block 1 to Block 4? Is this a Shift Supervisor in 16 minutes, or is this an eight-hour deliberation with the home office?

MR. WEBSTER: Well, actually, so we have the information available somewhere in 2013. It took a set of engineers and a team. You know, actually we had –- we subcontracted out to an engineering firm to really calculate what you're looking at in this case –-

CHAIR STETKAR: Bill, you're not answering his question. His question is not relative to this slide. We do have to be careful about the time, because I'm going to stop this discussion at 10:30. We

have an important meeting that starts at 10:45.

MR. BAUER: The goal will be to put in place procedures just like the FLEX support guidelines we talked about last time that would basically direct the operator in an integrated manner to go to his abnormal weather procedure, and then proceed into the mitigating procedure he's going to talk about here in a moment.

MR. WEBSTER: Yes, I apologize.

MR. BAUER: Yes. Do you remember when he sat here and talked, how he'd go through it, he would go right to that procedure. It would direct him what steps to take, and when to --

MEMBER SKILLMAN: Okay.

MEMBER SCHULTZ: The action is fast. This event is not necessarily fast --

MEMBER RICCARDELLA: But six hours --

MEMBER SCHULTZ: Okay, six hours for the rainfall, the flood doesn't happen immediately.

MEMBER SKILLMAN: Until later.

MR. WEBSTER: Okay. So, we again found ourselves in Block 4. We do find ourselves in Block 4 so we're doing a reevaluation to make sure or determine what capabilities that we would still -- to make sure that we can implement mitigation strategies

to prevent core damage. So, the flooding mitigation strategy would enable us after modifications to move back and say yes, our FLEX strategy works, and that's –- so we'd be back in Blocks 2 or 3 in the previous chart. And all that means is I'm going to take actions to make sure that I have a mitigating strategy that would prevent core damage.

The objective, again, is to maintain and restore key safety functions. I'm going to do protection of the plant. We talked about that earlier. I'll be protecting Phase 1. In our example, we had water migrating in the turbine building, and our emergency switchgear room is located in the basement of that building. I have flood protection walls up to 36 inches before that, so I had to make sure my water didn't exceed that 36-inch dyke that would affect my emergency switchgear room, which is part of my Phase 1 work.

And as Dave Heacock had mentioned earlier, I also elected to, or we elected to protect other aspects of the plant like the fuel or transfer pump house, as well. So, I'm going to maintain and restore protection of the plant and/or protection of my diverse flexible mitigation strategies, including the FLEX equipment.

So, I had to determine what the sequence of event was. I already had that from my analysis. I knew how long the event would last. I knew the peak water levels, and that accumulation on site, so I've been through that process. And I had to determine what equipment was needed to maintain my key safety functions.

Again, clearly that would be my emergency switchgear room which is where my AC power distribution system is, my DC batteries are, so that was clearly one of the areas that I focused on as far as protection. The other area would be aux feedwater, the turbine-driven aux feed pump is clearly a piece of equipment and a system that I would have to protect from the flood.

So, I determined modifications that were necessary to do that. Those include some –- I'll give you some examples of that here in the next slide. Enclosed portable dykes around doorways, I did have a sump pump outside the –- in the yard area that was designed to keep water out of that area. That turned out to be a challenge, so I'm going to maintain that sump pump capability as far as my mitigating strategies. I have multiple power sources. Actually, one of the power sources can be my SBO diesel, so if

my evaluation concludes my SBO diesel is not affected, then I would assume as far as strategy-wise that that could power these sump pumps and maintain that water outside of the building in that area.

MEMBER SCHULTZ: So, Bill, just to make it clear, you have assumed that the characteristics of the hypothetical plant equipment available that is outlined in NEI 12-06, all of those pieces and functionality that NEI 12-06 has assumed is not available to you, independent of flood or anything else. You're assuming that's not available to you, so you've got a short set of equipment that's available to you in the first place because of the guidance.

MR. WEBSTER: No, I wouldn't –- I'd take a look at what the –- I'd do the evaluation of where the water goes in the plant, and I'd do an assessment of, you know, what key pieces of equipment I need for –-

MEMBER SCHULTZ: I'm talking about AC power, offsite AC power, for example.

MR. WEBSTER: AC power. Well, you know, and we're doing this reevaluation, clearly my SBO is in a location outside of the power block. I would do an evaluation to see –- I mean, I would look at my normal diesels, I'll look at the SBO, and I'm going to assess whether or not those would still be available or not.

MR. POLLOCK: You are allowed to utilize because you –- it's a known hazard now instead of a hypothetical hazard. What survives from that known hazard –-

MEMBER SCHULTZ: All right. So, that's the path you're going down in this box.

MR. POLLOCK: Yes.

MEMBER SCHULTZ: Thank you.

MEMBER RICCARDELLA: I kind of characterize it as mechanistic versus non-mechanistic. In the original stuff you need a non-mechanistic assumption that you lose all AC power, and you lose access to –- now in this part of the evaluation we're considering mechanistic and evaluating specific events.

MEMBER CORRADINI: Your mechanistic evaluations for a highly deterministic and bounding initiator. But I guess what Steve's point was, all the potential equipment is being evaluated. You're not going to a short list. That’s what I think –-

MEMBER RICCARDELLA: No, I think it is a short list. I think it's just the equipment necessary for containment and core cooling.

(Simultaneous speech)

MR. BAUER: That's the answer to your previous question about the difference between the –-

MEMBER CORRADINI: I'm trying to get to that eventually.

MR. BAUER: IAISIG, and this. Instead of looking at everything at the plant, we're going to focus on the set of equipment I need to maintain those key safety functions.

MEMBER RICCARDELLA: So, if I want to say one other way, you're going to build out from what you need to maintain functionality in those three areas, and everything else, if it floods, it floods. You're not going to worry about it.

(Simultaneous speech)

MR. BAUER: A couple of slides back he said —-a couple of slides back he said, you know, last bullet, determine what equipment is needed for key safety functions. So, he's going to understand from the first bullet there, determine sequence of events, what all is impacted. And he's going to say what is it, the equipment I need to –- so he's going to focus the set of equipment down to a narrower set.

MEMBER CORRADINI: Thank you.

MEMBER RICCARDELLA: One other potential difference, I know in the ISG, they recommended a Peer Review Team be involved in this integrated assessment. Are you considering that action as sort of an

independent Peer Review, or is it done under Appendix B?

MR. BAUER: Well, we would do it the same way we did 12-06. We would not have a Peer Review Team, it would not be an Appendix B evaluation.

MR. FORD: But 12-06 does provide quality requirements that you have to apply to the design of the strategies.

MR. WEBSTER: The engineering part of it would be, you know, like I said, peer review, you know, standard engineering practices and those types of things. We have a multifaceted or diverse team of engineering and operations, and those type of things, but it wouldn't be an independent peer coming in and doing it.

MR. BAUER: Plus, as Joe had pointed out in his slides and some of those bubbles on the thing, it said we're going to submit this for review, so we would see it as being a change to the strategies that we would submit the JLD for them to look at and review it. So, we do essentially the same thing we've done with the implementation of FLEX capabilities for this. Use the same process to do the analysis, the procedures, the training, everything, implement the strategy and get NRC review of that to say they agree

with it.

MR. WEBSTER: Okay. So, some of the other modifications that we're considering doing is –- or things that we need to do, is we need to modify operating procedures to implement the mitigating strategies. In some cases, we'll have doors that if the dyke is –- the dykes need to be put in, there are some doors that may be opened or closed to prevent migration of water into those areas.

We're going to develop a procedure for the new mitigation strategy that's going to –- it may be a new FLEX strategy guideline, it may be something else, but it will be some new procedures that would implement the strategy for this particular flood hazard. And we're going to conduct training on those procedures similar to –- just like we did for our mitigating strategies, the training on the new procedures. And then we're going to use the validation process from the FLEX validation guidance that NEI put out, the same that we talked about a few weeks ago for our FLEX strategies. That validation guidance, that's –- considers some of the performance-shaping factors and other things that we did. We talked about here a few weeks ago.

So, additionally, there's some roof

modifications that we are going to make to prevent water from entering buildings, some operator actions again to close doors, minimize water intrusion. We're going to review the maintenance requirements of any mitigating strategy equipment.

For instance, the sump pumps I mentioned earlier, we just make sure that the PM process for maintaining those are adequate. And then we're going to reevaluate the deployment routes to make sure that we can still bring our FLEX equipment in in cases where we need to primarily –- in our case, it would be more where in the 16-hour time frame we'd be wanting to make sure we can bring down the portable RCS pump that would be able to put borated water into the RCS using the FLEX connections.

Okay, I think that's the end of the example. Any questions?

MEMBER SCHULTZ: Any other questions with the Committee of Joe, as well as the rest of the panel? Go ahead, Mike.

MEMBER CORRADINI: Yes, I want to repeat it so I've got it correct. So, from the standpoint of the integrated assessment, it's looking at what you think are the key safety features that you need to maintain, not necessarily the FLEX equipment, but beyond the

FLEX equipment, but not the whole plant. So, you're going to work out from that versus working in from everything down to the --

MR. WEBSTER: That's --

MEMBER CORRADINI: I'm trying to get to the essence of the difference of what you view as an integrated assessment and what Staff views as an integrated assessment. So, have I characterized it approximately right?

MR. WEBSTER: That's correct.

MEMBER SCHULTZ: Yes, as that staff guidance is outlined in the appendix.

MEMBER CORRADINI: Thank you. Yes.

MR. WEBSTER: The philosophy is basically the same. The scope is more focused, I guess.

MEMBER CORRADINI: So, do I have one more minute to ask a --

MEMBER SCHULTZ: Yes, we do.

MEMBER CORRADINI: So, I'm back with one, 29 inches in six hours is insane, so I think it was Mr. Heacock made a comment briefly that you're looking at probabilistic approaches to kind of unwind this. It seems to me, and I think we asked Staff this a couple of weeks ago, that the comment was that hydrology particularly in flooding events that there's a great

reticence to try to put a probability number on this, or some sort of recurrence number, or something. But he indicated there is some effort to being done that by industry. Can –- are you the wrong group to ask about, because to me we're starting with what seems to me an extreme event that now once you give that, you're chasing your tail. So, can you give me some information?

MR. BAUER: Yes, we are. I mean, right now are on the steady, and I'll call it a steady, not a full evaluation where the probability of that –- and I think the Staff has told you there is not existing tools or mechanisms that's acceptable to the general community, I guess, with flooding on the huge probability, so it is something –- we're looking at the valves, we're pulling it in but it's not a near-term –- it wouldn’t be done in time to resolve this. And if we did it that way, then we'd be slow in responding. And I think Jim Scarola talked –- we’re trying to improve the safety margins for the defense-in-depth as quickly as possible, and then we're going to go back and look at where can I get this amount of rainfall.

MEMBER BALLINGER: I have just done a speed search on 51 and 52. This is building a wall around

the plant and allowing 29 inches of rainfall.

MR. BAUER: Right.

MEMBER BALLINGER: And nowhere else, like the hamburger joint outside the wall, no problem.

MR. BAUER: That is not the highest value either.

MEMBER BALLINGER: Okay.

MEMBER CORRADINI: So, that was my first question, I have 30 more seconds. The other part of this that I thought in terms of speedy flooding is, essentially, dam breaks upstream but bring it down. So, there it's a little more mechanistic in terms of I have a manmade structure. So, my question there is, is there conservatism piled upon conservatism there that can be unraveled to look at the range of more realistic flooding events, or does that require federal assistance because of the Corps of Engineers, and they don't have enough time, or they don't -- they're not motivated to assist?

MR. BAUER: The latter, federal assistance. The Corps of Army Engineers we're doing that evaluation, and they're limited to what we've -- excuse me, what the ISG directed them to use as the tools to do the evaluation.

MEMBER CORRADINI: So, can I translate what

you just said? You're saying that they're helping, but they're using the conservative assumptions built into the ISG.

MR. BAUER: Right.

MEMBER CORRADINI: Okay, thank you.

MEMBER SCHULTZ: Very fine. Thank you for your presentations. At this time, I'd like to ask for public comments on the presentations that we have had this morning so far. We'd like to open up the line for individuals that might be on the phone to provide public comments. While we're doing that, is there anyone in the room who would like to make a public comment for the Committee? We'll wait for the phone line to be opened.

We hear you on the phone line. If you'd like to make a comment, could you please state your name, and make your comment?

MS. THOMAS: Oh, yes. My name is Ruth Thomas with Environmentalists, Incorporated.

MEMBER SCHULTZ: Thank you, Ruth. Make your comment, please.

MS. THOMAS: A good many of our members are in South Carolina. Now, I take it that this is a generic meeting on flooding? And we are very concerned about the situation at Oconee plant where there are

three reactors. And they're located on a series of dams, and the possibility of there being flooding. Maybe more than one of them, and so it seems like what is being proposed by the NRC is to be prepared in every way to prevent any flooding of a building.

Now, in a situation like that, are you considering other –- a number of different nuclear plants that are located in areas that get flooded?

MEMBER SCHULTZ: The application we're discussing here is for all of the nuclear power plants in the United States. We appreciate your comment specifically with respect to dam failure, and that is being considered.

MS. THOMAS: And what about the situation –- I was trying to think of some –- well, Cooper and Calhoun are also –- so, in other words, the NRC is –- now what are they –- what is the NRC basing their questions and comments on? What has been sent to them by NEI?

MEMBER SCHULTZ: Well, Ruth, we have your questions on the record and we'll have the answers prepared for you. If you'd like to discuss those further, we can provide a Staff member to discuss those with you. We have heard your comments, and we do appreciate them.

I do want to ask if there are others who might be wanting to make a comment to introduce themselves.

MS. THOMAS: Oh, yes. Okay, and what is your name and telephone number?

MEMBER SCHULTZ: The contact would be Mike Snodderly. I think you have this, at (301)415-2241.

MS. THOMAS: Okay, thank you.

MEMBER SCHULTZ: Thank you. Others on the line who would like to make a comment, please introduce yourself. Hearing none at this point, I would like to indicate that we will have an opportunity for public comments at the end of this morning's discussion, and we'll close the phone line. John, I'll turn it back to you.

CHAIR STETKAR: Thanks a lot, Steve. We'll take a slightly truncated break and reconvene at 10:45. We are recessed until then.

(Whereupon, the above-entitled matter went off the record at 10:34 a.m., and resumed at 10:46 a.m.)

CHAIRMAN STETKAR: We can come back into session. We do have a very, very full schedule here. So I'm going to hold us as tightly as I can to our agenda.

We're going to address continuation of this morning's discussions on the COMSECY on Integration of Mitigating Strategies for Beyond Design Basis External Events and Flooding Evaluations. And Steve Schultz will also lead us through this session. So Steve, it's back to you.

MEMBER SCHULTZ: Thank you. In this discussion we have three presentations by the NRC staff. The first is a discussion by the panelists here on the COMSECY that has been developed in this area.

And then we have two presentations from staff with differing views. So we will follow a schedule to make sure that each of these parties have an opportunity to present to the Committee.

Again, the -- this subject was discussed -- has been discussed with the Committee on several occasions. We had some discussions early and got some information from the staff regarding a plan for the COMSECY earlier this fall. And the full Committee had a briefing on this concept and approach in October.

Then in November 20th and 21st we had the opportunity to revisit it again. And we spent most of that meeting talking about this subject.

Again, as we discussed this morning, since

that meeting, we've received -- we first received a white paper on this subject about two months ago. In November we had the opportunity to have a draft COMSECY available for that review at our meeting.

It's changed since then. It's been improved since then. That I'm sure was the intent. And so we want to hear today the changes that have been implemented and any further ideas or concepts you want to provide to the Committee following our detailed discussions in the Subcommittee meeting.

So with that introduction, I'll introduce Mike Franovich, who's going to lead the panel.

MR. FRANOVICH: Thank you. Good morning Chairman. Good morning members of the Committee. I do have a few remarks.

Thank you again for inviting us back to the Committee to talk about the COMSECY. We did have these several evolutions in the past to talk about the white paper.

Given that the COMSECY is different then the white paper, we do encourage the members to focus on those differences, not only in the paper proper, but as well as the responses that we had to the two sets of nonconcurrences. It's a pretty rigorous and thorough response for the nonconcurrences.

In addition to that, we did make a few changes to the paper that we'll discuss here in short order. To provide a little more clarity on the context for why we think a course correction is needed at this point regarding the scope and intent of the 2.1 work, under Recommendation 2.1.

Through this process and the nonconcurrences that we received, we've actually benefitted greatly from those comments. It actually helped crystalize what the policy issues are for the Commission. Which they're going to deliberate on here shortly since they have a paper now.

I would like to impart a view that we have a sense of urgency to make this course correction at this time. If you look at recent recommendations from the National Academy of Sciences, one of their overarching recommendations was actually that regulators and utilities should move, in terms of making decisions, they should react in a timely manner when there is information present to -- regarding hazards for power plants.

This is a lesson learned that they discuss in their report quite a bit about the actual TEPCO experience. And looking at the level of protection for the seawalls and the iterations that went back and

forth in the analysis between regulator and licensee. And of course that analysis wound up iterating back and forth to a point where a timely action was not taken that could have probably protected the plant.

We'd also like to emphasize that the approach that we're proposing in the COMSECY is actually intended in part to stymie a little bit of this cause and effect we see going on between regulator and the licensed community. And that is that we see a desire for more analysis being done.

Mostly driven by some uncertainty regarding the decision making that would come out of the integrated assessment. Whatever analysis would be done. Whatever backfit reviews would be done.

We see a greater drive to do what are called the site specific probably maximum precipitation models rather than using generic information. As such, that is going to pose some challenges for us in order to make a timely review of such material.

And currently we are not on the current trajectory to finish the work in 2.1 as we have portrayed to the Commission back in SECY 12.25.

CHAIRMAN STETKAR: Mike, before you?

MR. FRANOVICH: Yes sir?

CHAIRMAN STETKAR: The statement you made is -- I'm not sure I understand it. You said that you'd rather do generic analysis then site specific evaluations because it takes more resources to review site specific evaluations?

MR. FRANOVICH: What I'm referring to is the use of the generic HMRs. Such as HMR 51 and 52.

CHAIRMAN STETKAR: Right. Which most of the industry has said is probably not relevant for site specific analysis. So I'm curious, because hazards tend to be extremely site specific.

MR. FRANOVICH: But there will be a site specific PMF model. But you use the input from the PMP model to feed the site spec -- the effects on the site.

So it isn't a -- there is a site specific analysis. But what I'm talking about is the PMP aspect.

CHAIRMAN STETKAR: Yes. I want to make sure that that's really clear in our minds of how you're proposing. Because to me it came across don't use site specific analysis because they're difficult to review.

MEMBER CORRADINI: Right. And that's the same impression I got. So if you --

CHAIRMAN STETKAR: Okay. I'm glad there are at least two of us.

MR. FRANOVICH: I don't want to leave you with that impression. It's more the input information.

MEMBER RICCARDELLA: And to make it clearer in my mind, you'd have to go through some of those acronyms and --

MR. FRANOVICH: Acronyms?

MEMBER RICCARDELLA: PMP and -- would you help me with some of those.

MEMBER BALLINGER: Probable maximum precipitations.

CHAIRMAN STETKAR: Probably maximum precipitation which is neither probable nor maximum.

MR. RICCARDELLA: What was the other one, HM?

MR. FRANOVICH: Hydrometeorological reports.

MR. RICCARDELLA: Okay.

MR. FRANOVICH: HMR reports. And again, it's more to the inputs for the analysis that are done at the plants. That's the generic impression.

CHAIRMAN STETKAR: And by the way Mike, just what might seem as a flip comment regarding

probably maximum precipitation is actually not flip. Because there have been events where what was judged to be the probably maximum precipitation was in fact exceeded. So therefore it wasn't maximum.

And in fact there's very little probabilistic analysis that goes into that evaluation. So it's a contrived amount of water.

MEMBER SCHULTZ: Mike, you just mentioned --

MEMBER POWERS: So, how else do you feel about it?

(Laughter)

MEMBER SCHULTZ: You just mentioned where the program is in terms of schedule. And a concern that it might not be on schedule. Can you speak further to that?

I -- the walk downs were done against the current design basis.

MR. FRANOVICH: Recommendation 2.3 has been completed.

MEMBER SCHULTZ: Has been completed?

MR. FRANOVICH: Those are the walk downs. And a number of corrective actions have already been taken by our licensees. A lot of good lessons learned there.

This is a confirmatory step to confirm that licensees are in compliance with their current licensing requirements.

MEMBER SCHULTZ: The next step then is to do the evaluation about hazards then.

MR. FRANOVICH: 2.1 work is the reevaluation of the flood hazard in particular. And then the output of that feeds into the integrated assessment, the 1-ISG-12-05. Not the one that was termed this morning by NEI in the 12-06 context.

MEMBER SCHULTZ: So, you indicated that you anticipate there could be a long duration of iteration to move on the current path. And the path that's being proposed in the COMSECY could get to where the end point would like to -- we would like the end point to be. That is providing the adequate protection --

MR. FRANOVICH: Correct.

MEMBER SCHULTZ: In a more prompt manner.

MR. FRANOVICH: The proposal is to try to get us to focus on -- and this is actually the one universal opinion held by both the staff that have not concurred on the paper as well as the staff that have concurred on the paper. And that is that the mitigating strategies should be protected against the

reevaluated hazards.

That is a common denominator. And all the passionate views that are going back and forth, in order to get to that point and to capitalize on the momentum and focus of industry now as you've heard this morning, we would prefer to put primary focus on the mitigating strategies and reevaluation hazard rather then looking at a total effects on the plant and trying to distill out of that process what other improvements beyond mitigating strategies would occur.

We think that will be a very lengthy proposition. Licensees aren't quite sure how that will unfold. Therefore, they have commented to us about the uncertainty involved. And the desire hence to do more precise modeling and analysis.

And so you quickly wind up in a mode, and we've seen this before, with certain generic issues. I'm sure members around the table have seen this that we wind up in protracted analysis space. And we get somewhat paralyzed and don't make regulatory decisions in a timely manner.

And we've had generic issues that have gone on for decades. We do not want to fall in that mode. We'd rather capitalize on the momentum that's here now today. And not rely on what momentum might

look like for an effort in ten years from now.

MEMBER SCHULTZ: So there's a potential protracted discussion associated with establishing the reevaluated hazard that could happen. That process is ongoing.

MR. FRANOVICH: That's correct.

MEMBER SCHULTZ: Has not been completed. And that --

MR. FRANOVICH: We are just -- we have only two of the year one facilities that they made the year one submittals. Only two are completed to date for the staff assessment.

So given that trajectory, you can imagine when we as a staff told the Commission that we anticipate within five years that we would have the majority of the information and be in a place to make decisions, we're not on that path currently.

You heard some of the concerns --

MEMBER SCHULTZ: So it's five years from the origination of the program. And that five years would have put us where?

MR. FRANOVICH: Into 2017 approximately.

MEMBER SCHULTZ: 2017, and we're not on that path? In order to stay with the current path not the COMSECY path, but the current path.

VICE CHAIRMAN RAY: How do you deal with the potential that the work -- that this long work that we don't want to get into, that you're trying to avoid, would disclose an adequate protection issue that would not be identified in the work that's being proposed? As you're now proposing.

MR. FRANOVICH: Well if you're -- well okay. Turn your question somewhat to say, I think what I understood you say, is if we were to do the integrated assessment as originally envisioned, that we might reveal issues that could be in the adequate protection realm.

VICE CHAIRMAN RAY: Correct.

MR. FRANOVICH: And that's feasible. That's certainly conceivable that may happen. We would argue that if you focus on mitigating strategies, which involves protection of some of the installed equipment that's relied on for Phase One in particular or the electrical switch gear for Phase One and Phase Two, that -- because that's already under the realm or umbrella of adequate protection, that you have already established a minimum layer.

Not as a substitute of the current licensing basis. We're not trying to substitute one for the other. But rather you have added a diverse

defense in depth layer on top of the existing current licensing basis.

Therefore, you've already established that minimum bar for adequate protection. It's conceivable that through the integrated assessment as envisioned in 12-05, there may be issues that are revealed that could be added protection.

I wouldn't say that's a foregone conclusion that that wouldn't occur. But that is some residual information that we may not capture if we don't complete the integrated assessment as originally envisioned. That is a possibility.

VICE CHAIRMAN RAY: Okay. And I understand we have to make decisions here and there are trade offs and so on. But we've been struggling with this concept of have we deemed everything as already without mitigating strategies, meeting adequate protection?

Or have we decided that the additional of mitigating strategies will result in adequate protection? Or are we deciding well, we're not going to look at that issue somehow?

MR. FRANOVICH: Because we're dealing with the operating fleet and not licensing new reactors, the presumption is by compliance with the current

requirements, that adequate protection is afforded. That is an agency policy.

In other words, if we want to demonstrate something is in the converse, the burden is on the staff to actually demonstrate that as being the case that adequate protection isn't currently afforded.

VICE CHAIRMAN RAY: Okay, so as a result then of the near term tests, which recommendations and so on, you don't see that as a question that needs to be answered rigorously?

MR. FRANOVICH: I -- well it depends on what you mean by rigorously?

VICE CHAIRMAN RAY: Well rigorously, comprehensively. Whatever words you want to use.

MR. FRANOVICH: Well, I would say that because we have an added layer of assurance and diverse defense in depth approach with mitigating strategies, that that really reduces the likelihood that you may have an issue that's a residual risk that could be sitting there as --

VICE CHAIRMAN RAY: Well, without question it reduces it. But I'm still persisting here because this is not -- the reference to the backfitting, it doesn't say backfitting rule, it says backfitting. Three times I think.

Well, the backfitting rule starts with establishing that adequate protection exists. And then asks the question whether there's a substantial enhancement in safety and so on.

So we're still insisting upon backfitting it seems to me. Maybe not now as an element of this process. But I don't see how you separate --

MR. BOWEN: Well, I think it's important to look at the collective --

VICE CHAIRMAN RAY: You have to do it -- well, let me -- I'm sorry. Let me just say one more thing so I can get it clear.

It seems to me you have to affirm adequate protection before you enter into backfitting. Either by some declaration or plant by plant determination. Or somehow.

MR. FRANOVICH: That is part of the original licensing process for the facility. Once they are licensed, we don't have any direction to go back and reaffirm that adequate protection is currently afforded by compliance with the requirements. That's not the direction the staff's been given.

VICE CHAIRMAN RAY: Okay. Well, that's a very clear statement and I appreciate it. I don't

know how you apply the backfitting process without affirming adequate protection exists. But -- because it's in 51-09.

MR. RECKLEY: Well, it's somewhat the negative. We're looking -- when you're doing backfitting, you're looking at a delta. And basically you would be saying, or make -- being asked to make a call as to whether a particular plant change is needed for restoration of adequate protection.

Until -- and so as Mike was saying, until we identify an issue and a particular plant modification that might remedy it, we're assuming a plant is adequately protected by compliance with the rules. But upon being faced with a new issue and a possible resolution, then you can reassess whether a change is needed for adequate protection or compliance or as a cost beneficial substantial safety improvement.

VICE CHAIRMAN RAY: Don't get me wrong, --

MR. RECKLEY: Yes.

VICE CHAIRMAN RAY: But what you just said is -- what you all have said is informative but not -- it's something we haven't resolved clearly enough. The assumption, you used the word assumption for example.

We're doing a reassessment of flooding hazards. Is that assumption consistent with the reassessment? Or does it have to be reaffirmed?

MR. RECKLEY: I'll get to that in a slide if I can read off one.

CHAIRMAN STETKAR: Okay, in fact let's finish this.

VICE CHAIRMAN RAY: Make sure I'm paying attention when you do, okay?

MEMBER SCHULTZ: Exactly. If it's not covered, we'll come back to it. But we would like to go through the presentation. Mike, are you ready?

MR. FRANOVICH: I'm just going to wrap up my remarks really --

MEMBER SCHULTZ: That's fine. Please do.

MR. FRANOVICH: And then we can move on and have Bill go through the formal slides.

I do want to characterize, talk about for a moment defense in depth concept. I know that's been raised before. And whether or not we have an adequate balance between protection and mitigation.

I think this Committee has heard over and over that in terms of mitigating strategies, it's somewhat of a misnomer. These are really preventative strategies to prevent core damage.

The notion of mitigating strategies as a concept was floated by the Near Term Task Force Report as a model off of the 50-54 HH2 or B.5.b measures. That title carried through over into post Fukushima actions.

And actually, it's again centered on preventing core damage inherent in the mitigating strategies. It is a -- installed equipment is relied upon under Phase One. And there would be a level of protection necessary that licensees would have to demonstrate that that equipment is protected against a reevaluated hazard as we're proposing in the MBDBE rule making package.

So I just wanted to emphasize that piece. Because I hear a lot of dialog back and forth whether or not mitigating strategies is actually being used for mitigating a core damage event. And it's not. That's not what it's designed for under the FLEX Program.

At this point I'm going to turn it over to Bill. So Bill?

MR. RECKLEY: Okay. What I'd like to do is go through the COMSECY. We'll talk, as Dr. Schultz asked, talk a little bit about the difference between the white paper and the COMSECY.

They're not fundamentally different. It was rearranged a little bit. Hopefully it's a little clearer. We answered some questions that had come up during the process.

So the layout of the paper is on this slide. The discussion section within the paper is basically broken into two parts. And there's some background information provided.

But the discussion section talks about a proposed path for what we would require in the mitigation of beyond design basis events rule making. And then there's also a discussion of -- and this goes to Mr. Ray's comments, what we might do to consider requirements beyond that particular rule making, for a particular event, looking at the hazards, plant designs, the histories and so forth.

Then we make our recommendations for the Commission to affirm the positions and provide some enclosures for background and further discussions. And then the two nonconcurrence packages.

The first item in the discussion section of the paper is the focus, and it really was the initial purpose of the paper. It's grown over the last few months. Was that there was a policy matter we thought we needed the Commission to affirm, which

was mitigating strategy should address the reevaluated hazards. And we could assume that that was what the Commission intended when they told us to issue the order and pursue the rule making, as a matter of ensuring adequate protection of public health and safety.

The backfit process been talked about a lot during the Subcommittee, and this meeting even this morning. Our view was that the Commission could weigh in. If it was adequate protection, we can basically go straight to including that language in the rule as Commission direction.

If not, we would have to do additional regulatory analysis, backfit analysis of that proposal if the Commission were to say no, that's not what we intended. As Mark said, our mitigating strategies would then lead to address reevaluated hazards, meaning that needs to provide the functions and the capabilities that are installed have to be protected against, or designed to withstand those hazards, so the flooding in this case.

CHAIRMAN STETKAR: And Bill, just to make sure, the basic concept is only mitigating strategies need to be designed against the reevaluated flood hazard. Is that correct?

MR. RECKLEY: Yes, and this of course gets to the second point that we're going to look at.

CHAIRMAN STETKAR: Okay.

MR. RECKLEY: As a rule, as a generic requirement, the baseline that every plant needs to address, they need to address the reevaluated hazard. Now for some plants the reevaluated hazard might be below the design, so nothing changes. But every plant would need to address within mitigating strategies, the evaluated hazard -- reevaluated hazard.

Then we'll get to the next slide. Which is we will assess whether we should pursue additional information from licensees and possibly imposing plant specific backfits on licensees based on information about the reevaluated hazard, event frequencies, response times.

If a licensee has a long time to prepare for a flood that would be taken into account. Licensing histories, all other available information. This is what we do routinely as issues are identified. And we try to make decisions as to whether a plant should be subject to a new requirement.

This can also take into account the discussion from this morning, what have licensees already done of their own accord? And then it gets

into some of the other discussions we've had over a long period of time, on the treatment of regulatory commitments or voluntary initiatives and how that feeds into regulatory analysis and all of that.

But this is the kind of thing we need to assess routinely. But based on the reevaluated hazards and all these other parameters that feed into the backfit discussions, we would do that for each plant. We'd document the assessment or the evaluation and close out those activities.

So the 2.1 activity, sooner or later, just like all other generic items that have been opened up, need to be closed out. Likewise the order and the rule making will need to get closed out.

As part of those processes to close out those open activities, we would basically be documenting a decision that we've decided either to pursue additional information requests and possible backfits on plants. Or we've decided not to do that. So there would be a documentation that the staff made a conscious decision one way or the other.

As is also mentioned this morning, we understand, this is complicated by the state of the art and probabilistic flood hazard analysis and the fact that the backfit process really does largely, at

least at the staff level guidance, kind of point to core damage frequency and other measures for us to use in making those judgement calls. That's complicated when probabilistic information is not available.

But again, it's not unique. And we will make our way through this. So that's the other part of the discussion. And it's kind of key that basically we consider both of those aspects of the COMSECY.

That leads to the recommendations in the paper, which are that the Commission affirm, again, mitigating strategies of best reevaluated flooding hazards as a matter of adequate protection. I shorthanded this, but that's important as it's been brought up.

The other thing we wanted the Commission to affirm was that there are as the industry talked about this morning, targeted or scenario-specific strategies, some of which could involve events that would heavily damage a site. These are the overwhelming events that were mentioned this morning.

We just thought it was prudent to get the Commission to weigh in that they are cognizant that as we move forward, there will be these scenarios. And again, one can argue how conservative or whatever,

from our standpoint making a recommendation to the Commission, we're going to use those reevaluated hazards. We're going to tell a licensee as part of the rule, they need to have strategies to address them.

Some of them will be fairly dramatic events if one should ever occur. So we wanted the Commission to affirm that they are aware of that as we move forward.

Those were initially the first two. So as you read the nonconcurrences, it might get a little confusing, because I talk about the original version. Those were the first -- those were the policy issues that we at first wanted the Commission to confirm.

As we went through the concurrence and nonconcurrence processes and it was brought out that these -- the flooding assessments and the integrated assessment as it's called out in the current flooding guidance in ISG-12-05, was a significant change. And we should make the Commission aware of it and actually get the Commission to weigh in.

We considered that and agreed that when we did other changes to Fukushima and lessons learned activities, when we consolidated some of the emergency planning activities. When we consolidated the

incorporation of the SAMGs into the MBDBE rule making that we ask the Commission to acknowledge that. It was a good point, so we added this as an additional point asking the Commission to affirm the integration of these activities, mitigating strategies and the flooding reevaluations.

So I'll get to integrated assessments, the nonconcurs in the paper, we'll be talking later, they're obviously the subject matter experts, but I'll give you my feel. And for what the difference between the current track, and I -- I'm probably going to regret it, I got some flow charts later I'm going to try to use.

But the integrated assessments are basically a tool to assess vulnerabilities to a plant. So they are looking at a reevaluated hazard and saying if a plant is going to experience that hazard, that level of an event, what is the vulnerability? What challenges will there be to the structure systems and components important to safety? Which ones would be lost?

Once I have that plant level information, I can then assess what might I do to protect some of that equipment? If it's not feasible to protect it, what might I do to mitigate the loss of that

equipment? I -- the terminology, and I apologize for the staff, we are mixed messages.

The industry integrated assessment is different then this integrated assessment. The mitigation in this context is a broader context then the mitigating strategies that we talk about. I understand the confusion. I wish I could do something about it, but I'll just add -- I'll probably just add to it.

CHAIRMAN STETKAR: And why can't you?

MR. RECKLEY: Why -- well, as we go forward, I think we will as these programs get integrated, that it will help in that regard. For now, given they were being pursued somewhat independently, not totally, but as separate functions, they evolved their own terminology. And it wasn't consistent. Well, again, as we integrated, one side benefit of that will be the terminology will at least get worked out.

So, as was talked about this morning, the -- earlier this morning, it could, but not necessarily rely on the mitigating strategies equipment, the Order EA-12-049 equipment. And the equipment in the rule making.

VICE CHAIRMAN RAY: Excuse me Bill, what

do you mean by it? It could rely, you said. What is it?

MR. RECKLEY: I'm sorry, the -- when you're looking at a solution to the vulnerabilities identified as part of the integrated assessment. Those fixes, those actions taken in response to address the vulnerabilities, could but would not necessarily rely on the mitigating strategies that were developed under order EA-12-049.

VICE CHAIRMAN RAY: That's a good clarification, thank you.

MR. RECKLEY: Okay. And again, the people coming up later can correct me if I mischaracterize. But this is my understanding how these pieces fit together.

Then the other -- the last part and it does factor into the decision making that we made that I'll try to get to in a moment, is that after we do the vulnerabilities assessments, after we do the possible resolutions to those vulnerabilities, the integrated assessment is basically done. And it feeds into what under Recommendation 2.1 was called Phase Two regulatory decision making, right.

So basically the first phase of the flooding reevaluations was this information gathering

assessments, understand plant response, understand plant possible responses to those. And then that would be turned over to Phase Two, which would make regulatory decisions in regards to which of those might be imposed through generic or plant specific regulatory requirements.

In my mind it differs and I think this might have begun to crystalize a little bit in the discussion this morning, it differs from the approach in the COMSECY in that the COMSECY proposes to the Commission, and asks the Commission to affirm that the rule making, the mitigation of beyond design basis events rule making, should require licensees to have at least one success path for that reevaluated hazard. All right?

And that is as Mike said --

VICE CHAIRMAN RAY: What affected that difference in terms of the Phase Two potential for saying more needs to be done?

MR. RECKLEY: Well, that is a potential. And I'll get to it in another bullet. An equal, and I'll be honest from the staff level, bigger concern, was that the Phase Two assessment may not result in any regulatory requirements. You cannot have been around this agency --

VICE CHAIRMAN RAY: That was what I was just going to say.

MR. RECKLEY: For a long time without realizing that many issues get evaluated and the net result is by the time the evaluations are done, the research programs are undertaken, and sometime down the road when decisions are made, it results in no regulatory action.

So yes, there may be a chance that something is missed. There's also a concern, and one that actually drove the generation of the COMSECY to be honest, was the fear that nothing would be done in the absence of asking the Commission to affirm that mitigating strategies should be at least one thing that is done to address the reevaluated hazards.

MEMBER SCHULTZ: Or that it could take a long period of time for something to be done comparatively.

MR. RECKLEY: Right. And both of those are concerns that either nothing gets done in the long term, or just the fact that it takes a long time, nothings being done in the interim. And while you're waiting, that's not done.

I mean people criticize the Japanese event, keeping in mind that the analysis that TEPCO

did, that took a long time leading up to it, but the analysis that TEPCO did that is often cited as being why didn't you act, was completed in 2008. And the event happened in 2011.

Well, from a regulatory perspective, that's not a long time. And that's the fear that we're having, is that as Mike mentioned, we don't want to get into that mode when we have an opportunity to take timely action.

And again, that's not really that controversial. So I don't want to imply that you know, we're saying to do this. And there's a group saying not to do it. But the --

VICE CHAIRMAN RAY: One more time, I'm sorry, but this is so important. You don't see what is now being proposed as a -- at least one success path, as mooting the Phase Two assessment potential for something else or something more to be done?

MR. RECKLEY: I don't -- we don't foreclose that we still may want to look and we still may find things on a plant specific basis that we want to pursue. But I'm going to propose a slight difference in how we approach that.

And it's a different decision model. I mean, it's very subtle this stuff and --

VICE CHAIRMAN RAY: And be very clear when you're doing that.

MR. RECKLEY: Okay.

VICE CHAIRMAN RAY: Because that's so crucial.

MR. RECKLEY: Right. Okay. So that's the last bullet. That we will pursue evaluating the potential need for additional plant specific backfits.

MEMBER CORRADINI: I'm sorry, but when you do that Bill, will you still take the same initiators which are potentially quite conservative and unknown in terms of -- why was it? I mean, what you're saying to me is that I'm going to have a chance to take another look at it.

But if you're going to take it -- have another chance to take a look at it, would you not be more realistic as to -- on what's the challenge? What the specific challenge is?

MEMBER BALLINGER: And I think that that's the difference between what's being proposed in the COMSECY versus the current path if you will. Is the difference with the COMSECY is it says okay, at a bare minimum, let's do something immediately to ensure you have one defined safe shut down train. Then let's go to the next level of detailed review and then make

adjustments as needed.

MEMBER CORRADINI: Because my anticipation, or maybe it's just only me and the other members are in disagreement, but my anticipation is there's an awful lot of margin there because I've driven this whole thing with a hypothetical starting point that's at least for flooding, doesn't have -- I mean Ron asked the question about where did you get it. And the answer is go look at the guide.

But the guide just says just assume it.

MR. BOWEN: That's right. This is the --

VICE CHAIRMAN RAY: Jeremy, finish what you were going to say before.

MR. BOWEN: I'm sorry. Well like I said that's the -- so that's the version of the COMSECY -- proposed approach in the COMSECY. Whereas the current version is start to look at everything. And then from there, kind of narrow down okay, this is the broad impact on the plant, which one's multiple potential should we adjust -- should we address.

And it may take a long time to go through each one of those.

VICE CHAIRMAN RAY: Okay, but the hard thing to understand is, why would anybody object to doing something soon that provides one path, unless it

was undermining the larger --

MR. RECKLEY: And that's the point -- and I'm going to get to it in a second.

VICE CHAIRMAN RAY: Please do underscore it. All right, I'm at the point now.

MEMBER CORRADINI: And I'm happy.

MEMBER SCHULTZ: And excuse me Bill. You've got two sub-bullets --

MR. RECKLEY: Right.

MEMBER SCHULTZ: One says longer term. The first bullet, where warranted, that is not anticipated to be a long term process?

MR. RECKLEY: No.

MEMBER SCHULTZ: Where warranted, pursue with appropriate assessment?

MR. RECKLEY: Well, again, it's the sort of thing we encounter routinely. That the pace -- the items we identify and the pace at which we address them will be dependent on the information that's driving the concern.

And if I had -- and I hate to use the example, but all reasonable example, if we had a high frequency event, and it had flip edge implications, we're not going to want to sit around for a long time while we say we're going to evaluate that as a plant

specific backfit. It's been identified as a high frequency event. It's going to drive us to take more pressing matters.

If it is on the borderline of our backfit guidance, which means you know, that backfit guidance is on the order of a core damage frequency between ten to minus four and ten to minus five for a substantial safety enhancement. So somewhat higher for adequate protection if you wanted to make the hard rule.

If the initiating event frequency is ten to the minus four or five, well you know that you're on the margins of making it through the backfit. That's going to be treated with less urgency then if I have some high frequency event that's going to make it through.

So that's -- it's not only where warranted, but then just like we would do any discovery of a new issue, the urgency will be driven by the level of concern.

MR. FRANOVICH: And so in Bill's latter case, you can see the dilemma of how much debate will occur back and forth between licensee and NRC about is it ten to the minus four, ten to the minus five if you don't have the methods fully vetted in advance. We went through this case example actually with one of

our facilities. The one that stimulated GI-204.

It took a couple of years to come to a point where this is our best estimate regarding dam break frequency. And that's not a universally held opinion across the federal agencies whether or not that's even an appropriate value.

Now we were using other factors in the backfit analysis to drive for at least some compensatory measures such as looking at defense in depth and so forth. And timing and action sequence progression. But that debate back and forth, whose method is appropriate? Which one has got consensus standard behind it if any?

Some of them don't have a consensus standard. But that's the kind of dilemma we don't want to try to entertain now up front at risk of losing the benefit of codifying at least this requirement on the mitigating strategies and the reevaluated hazard requirement under the MBDBE rule making.

MEMBER BALLINGER: But excuse my naivete, but don't we have two time frames here? If the event that you're describing occurs, there's a -- if somebody discovers something serious, the licensee's going to take action right away.

MR. RECKLEY: Should.

MEMBER BALLINGER: Independent of how long it takes you to do it.

MR. RECKLEY: Hopefully yes.

MEMBER BALLINGER: So there's two time lines here isn't there?

MR. RECKLEY: Right, yes.

MR. FRANOVICH: We would expect in that matter, if we thought there was a genuine safety issue, there would be interim compensatory measures in place. And we have done that in the past. I mean, there is clear evidence of that and there's no debate about that piece.

MEMBER REMPE: So when you go to this second evaluation, you'll consider the mitigating strategies, equipment, whether it's onsite or offsite?

MR. RECKLEY: Depending on the scenario, most of this is either the installed equipment Phase One under mitigating strategies, or the portable equipment onsite. The Phase Three offsite is -- it has to play into these longer term events. But I don't see that as a large driver to be honest.

MEMBER CORRADINI: So the answer to her question is yes for Phase One and Phase Two?

MR. RECKLEY: Yes.

MR. CORRADINI: Okay.

MR. RECKLEY: And then the last sub-bullet there, as was talked about a couple of times already, this does also factor into the development of improved probabilistic plant hazard analysis methodologies.

So trying to go quickly through these slides. Because largely this is a matter of regulatory decision making. I mean there's technical elements to this obviously.

But really what we're asking the Commission to do is to make sure that we're on the right regulatory path. So this is -- these are decision making models that we're talking about.

So and this is the current path for flooding assessments. And this is out of ISG-12-05, basically describing the integrated assessment process. Starting with the hazard, you're doing the vulnerability assessments. You're looking at flood protection. What SSCs important to safety might be lost or challenged.

How might I mitigate the loss of that equipment? Provisions for these dramatic events where I might do what's now called a targeted approach, where I might open up buildings or whatever in order to help maintain their integrity.

And that all feeds into the results of the integrated assessment. Which then goes to Phase Two. Which since for operating plants, and that's what we're talking about in this paper, is what are we doing for operating plants, has to include backfit as a discussion.

So as has been brought up a couple of times, backfit shouldn't be just thought of as a cost benefit assessment. Backfit is a whole process. It -- for some, for the default if you will, it includes a judgement as to whether it is a substantial safety improvement and whether it's cost effective. But the exceptions that are defined in the rule include whether it's compliance or whether it's a matter necessary for adequate protection.

Separate from the results from the integrated assessment are other things that are going to need to be considered to make backfit determinations. Event frequencies, we're going to need some kind of assessment of that because that backfit rule evolves around that.

Core damage, backfit -- core damage here is just an extension of the event frequency sort of. If there's a cliff-edge effect. The plant information, the plant history, the remaining life on

the facility, all kinds of things that would have to get factored in to basically say whether we think a backfit should be pursued for any particular remedy to a vulnerability that was identified in the assessment.

MEMBER RICCARDELLA: What do you mean by regulatory history in that box?

MR. RECKLEY: When we're doing a backfit determination, we're going to look at what we previously reviewed and approved. And for many cases, there may be something that we're looking at now that directs -- that involves directly what we looked at before, reviewed and approved. So that would be regulatory history.

MEMBER RICCARDELLA: Thank you.

MR. RECKLEY: Just one example.

While not totally independent, because they were both started in 2012 and not fully integrated, somewhat separate, we have EA-12-049, the mitigating strategies order, and much discussion that that order because the reevaluated hazards weren't yet available, proceeded with the most recent site flood analysis. Which could range from early site permit if it happened to be at a plant site that had been addressed later on. Or could be all the way back to the original design basis flood, depending on the

history.

But there was a need to make progress on the order. In the absence of having the reevaluated hazards, compromises were made. And decisions were made that we would just use the most recent site flood analysis.

The guidance for the flooding assessment and to some degree some of the initial discussions, and you've heard this changes as we talk about the rule making, were assumingly stayed separate and that the burden for justifying any requirement for addressing the reevaluated flooding hazard, fell on Phase Two of the Recommendation 2.1 activity.

So starting from that, the decisions were --

MEMBER SKILLMAN: Bill, there's a subtly that you are communicating in the sternness of your statement. Would you clarify that or explain that please? That you seem to reinforce that with the unique amount of energy. And I'm trying to understand why.

MR. RECKLEY: Well, it's because it goes to the discussion that we were having earlier. If you are going to put the burden on Recommendation on 2.1 Phase Two, you can say that that process one, is going

to take longer as we've talked. That's probably a safe assessment.

It may identify plant changes that are justified and made. But you also have to recognize the possibility that the reevaluated hazard would not result in a regulatory requirement.

So the picture that comes immediately to mind, and we brought this up at the Subcommittee, is that because of the way we proceeded with this, right now to comply with the order -- and licensees aren't doing it, but in terms of a regulatory requirement, they could put the mitigating strategies at the same level as their safety related equipment, even though they have evaluated hazards that show that that level would be flooded.

That made a certain amount of concern that we didn't want that to be the end state. That we wanted at least again, one level of protection for that reevaluated hazard. And that's basically then why we go to the proposal in the COMSECY that you have at least one success path for the reevaluated hazard.

And --

MR. BOWEN: Put plainly, the example that Mr. Webster went through earlier this morning, on the current path, the requirement would be that they

develop their mitigating strategies for the last information they had, which was before their reevaluated hazard. Now they have additional information.

On the path that we were on, it would be incumbent upon going to the backfit process to have them change their strategies to address that new information. There is severity in which --

VICE CHAIRMAN RAY: But the requirements required is a matter of adequate protection. But time is of the essence here, so yes.

MR. RECKLEY: So the fact that that becomes a regulatory requirement does feed back into our assessment of other changes that might come out. But under this proposal, everything else would basically stay intact.

So you would still do a total plant assessment. You would -- to look for what other items might warrant a regulatory requirement.

The concern, and this again, this is what we go to, the concern with that is that if you are a licensee looking and saying I don't know what the NRC's going to do in terms of adequate protection. I don't know what they're going to require. They don't have well defined decision criteria. The net result

of that is I'm going to pencil-whip the reevaluated hazard and try to make sure that it is low enough that I won't be prompted to do anything under the backfit process.

And that's the concern that has been expressed. And as Mike mentioned earlier, whether you want to call it paralysis by analysis. Or you just want to say we've been down this road before with other generic issues. That we get into this mode where licensees understandably say, if you're not going to tell me what you're going to do with the output, I'm going to make sure that the input minimizes my chance of having to do something I think is unnecessary.

MEMBER BALLINGER: But that implies a mistrust.

MR. RECKLEY: I've had -- I actually think it's human nature.

MEMBER BALLINGER: I mean the element of mistrust eventually.

MR. RECKLEY: Well, but to say --

MEMBER BALLINGER: That they won't -- wait a minute.

MR. RECKLEY: Yes.

MEMBER BALLINGER: That they won't do

something to solve a problem which they clearly know exists.

MR. RECKLEY: Well, but this is the dilemma is that there's not a mutual agreement on the level of the problem. I would agree with you if they agree there's a problem, I have not encountered licensees wouldn't fix it. But the degree to which you characterize this as a problem is not the same.

VICE CHAIRMAN RAY: And no, I agree with Bill entirely on this one. Having pencil-whipped things myself, I --

MR. BOWEN: It's more, to be a little bit more fair, it's also the aspects that were discussed earlier about the, you know, the example from North Anna, the 29 inches in six hours. It's for the sake of expediency of the process, it's a conservative assumption yes.

For the purposes of going through the backfit process, it's not an appropriate number is what licensees would say. And I think we would agree with.

MR. FRANOVICH: We would iterate back and forth until we refined to a point say we have a mutual understanding. Which is inherently a lengthy process. If you don't agree from the get-go whether or not the

hazard really is legitimate.

MR. BOWEN: The process would drive us to do more correct analysis I guess.

MEMBER SCHULTZ: For the Committee, because we have six minutes. And Bill's walking through --

MR. RECKLEY: Right. And I've only got one more.

MEMBER SCHULTZ: I know, but you're walking through a process here.

MR. RECKLEY: I know. Right.

MEMBER SCHULTZ: And I don't want to get to the end and then have run out of time.

MR. RECKLEY: Okay. So then -- so what is the concern? The concern is why we're pencil-whipping the evaluated hazard. You're not making progress because that reevaluated hazard was to be an input to mitigating strategies.

And as we're talking about how to calculate the reevaluated hazard, results in a delay. So that is really the management concern that drove in large part the initiation and the development of the concept.

So, now this is the one I'm really going to regret. But this is trying to say how the COMSECY

envisions this. And you can compare it to one slide ago, where basically you would say, you can have the reevaluated hazard be mitigating strategies.

Again, there's a general agreement on how this happens. Except with the concern that the mode that we're currently in is going to result in problems in agreeing on what the reevaluated hazards is.

So what the COMSECY envisions and I think what you heard from industry a little bit this morning was, that if it is understood that the test that is being applied to the reevaluated hazards is the success path for a mitigating strategy, that is something we can agree on, industry and regulatory. And we can move forward.

Because they know -- they can understand what they're comparing the reevaluated hazard to. Right, it's a classic, I have a design, I have a hazard, I know how to do the comparison to see if I have -- where I need to develop some enhancement to try to fix it.

Now where the COMSECY differs from some other proposals where we would just do this and let everything else the same, is it brings in the judgement of the staff as to when, based on the reevaluated hazard -- this is what I tried to describe

earlier. All of these things, we deal with routinely.

Reevaluated hazards, frequencies, plant histories, plant locations, regulatory histories. To make a determination as to whether we think the outcome is likely. Taking the example, we may not say 29 inches in six hours is something that would prompt us.

Now within those broader discussions, a licensee and the staff might have said, well, gee 29 inches in six hours is maybe on rou -- is conservative. But that plant might enter into some kind of problem at ten inches in six hours.

Well, if we have that kind of insight that the -- that a lesser hazard might be a problem, we could say do we think the lesser problem might come out the backfit process such that it warrants --

VICE CHAIRMAN RAY: Do you have any confidence you're going to do that? I mean just like licensees behave in their self interest, staff does too. And this is a job that needs some stimulus to be undertaken it seems like.

MR. RECKLEY: Well, I would say that the primary way you'll know is because we're telling the Commission we're going to disposition this and document our decision. When I tell you that you know,

that I have not been here long enough that maybe we didn't do such good jobs on some of these things, there's probably histories.

But I can tell you that what we're telling the Commission in the COMSECY is we're going to evaluate this. We're going to come to a conscious decision. We're going to document that decision. And I'll be honest, that's about all. That's about as good as I can do.

VICE CHAIRMAN RAY: All right. All right. That's fair enough.

MR. RECKLEY: So that basically is then what I think is the primary difference. And I didn't want to make this about the nonconcurrences, but the primary difference between what the COMSECY is proposing and what the nonconcurrence is proposing is that the COMSECY is saying the staff will make a judgement call -- well one thing, mitigating strategies is a requirement under the rule.

Then following that, the staff will make a judgement call as to how much further to pursue matters on a plant specific basis. Whereas the -- if you left it kind of as it is, all of those would be done under the integrated recycling process. I'm sorry.

MEMBER BLEY: Well, you just said something at the end that upset my --

MR. RECKLEY: I should have stopped.

MEMBER BLEY: In the COMSECY you say we don't need to do the integrated assessment anymore.

MR. RECKLEY: Yes.

MEMBER BLEY: To the extent it was laid out in --

MR. RECKLEY: Yes, I'm sorry.

MEMBER BLEY: ISG-105 or whatever the heck it is.

MR. RECKLEY: Yes, yes.

MEMBER BLEY: And I thought I was hearing you say instead of that, to see if there's anything beyond protecting the mitigating strategies, will be a judgement call seeing if something looks like it might be funny. But then you added on at the tail end, the integrated assessment process.

And I'm not sure what that means to you now, I mean.

MR. RECKLEY: And I should say -- and I should -- and this is the same problem I had this morning that --

CHAIRMAN STETKAR: Bill, before you answer that, answer it in the context under the presumption

that the mitigating strategies in regulatory space are guaranteed to always work. They're guaranteed to always work. By definition they're guaranteed to always work.

If they're protected against the hazard, they will always work. Even if I have the flimsiest piece of single piece of equipment there, they are guaranteed to work.

MR. RECKLEY: I'll address what I have --

CHAIRMAN STETKAR: So both of those -- under that assumption, then how do you justify completing that process?

MR. RECKLEY: First of all, my tongue slipped. I shouldn't have said integrated assessment, I should have just said what the slide says, which is assessment, right. Because there would be a difference between what we pursue if we decided to go forward on an evaluation of a backfit.

MEMBER BLEY: And that's kind of undefined?

MR. RECKLEY: It would be plant and scenario specific, because that's what we're going to be facing. We're going to be facing a decision on a scenario and a plant. And so we would have to do it on that basis.

So -- but I shouldn't have said integrated assessment. It will be an assessment that may have a lot in common with integrated assessments. But depending on the scenario and the plant, maybe not.

Going to Dr. Stetkar's, I wouldn't characterize our assumption ever being that we'll guarantee stuff will work. We're only benefitting capabilities to address a reevaluated hazard and make sure those capabilities would be available faced -- if the plant were faced with that reevaluated hazard.

Beyond that, it's got the same kind of reliability that -- you wouldn't say that the ECCS is guaranteed to work. Otherwise we you know, we would have stopped a long time ago. Obviously, we can't say things are guaranteed to work.

We'll make sure the capabilities are in place. We'll make sure the licensees have the programs, the staffing, all of the programmatic controls that will be part of the rule, will be part of the guidance to make sure that that is going to be as successful as we can make it.

But I don't -- we're not entering into -- if we were to enter into it with just the absolute assumption it always works, we would never have to go outside that decision box. We'd just stay in Phase

Two. Because we'd basically almost say, we always have a guarantee of success.

That's not going to be true. And so we're going to look at that and see if it's a high frequency event. If there's somewhere to buy --

CHAIRMAN STETKAR: How are you going to do that Bill? It's important because I hear, and you have to be careful about time. But I hear the same sort of process that we walked into 25 years ago in fire analysis.

Just -- and I'll just say that. I hear that same thought -- sort of thought process. And I thought we've learned more than that.

VICE CHAIRMAN RAY: And I had one thing also, which is if we're only focused on core damage frequency and not on preventing the loss of the ECCS, I think the outcomes are going to be as John's hypothetical would say and you affirmed, would be well, there's never anything to do because we can prevent core damage.

And the fact that we lose the ECCS and AC power is not a concern. Where does that ever come into the equation?

MR. RECKLEY: Well, it's going to come in because as we look at that scenario, and again, you're

going to consider frequencies and other things. You're going to say if that's a high frequency event, do you want to be in the position where you're losing that traditional equipment?

VICE CHAIRMAN RAY: Right.

MR. RECKLEY: And if the answer --

VICE CHAIRMAN RAY: And you're going to ask that question?

MR. RECKLEY: Yes.

VICE CHAIRMAN RAY: And not just leave it to the licensee, but yours.

MEMBER SCHULTZ: Let's go back to your last slide and point the path.

MR. RECKLEY: Basically, as we go through the process, again the COMSECY lays out the importance of this. That's the minimum. Mitigating strategies will address the reevaluated hazard.

And then it has the second step. That for each plant, we'll go through and make a determination in this decision box, whether to pursue additional assessments, additional regulatory actions. If the event frequency is very high or we have some other reason to say hey, in addition to mitigating strategies, an action should be pursued, we would pursue it.

And we would enter into this and go around. It's so --

VICE CHAIRMAN RAY: We're out of time, but I mean we have to make comments here and decide if there's any input that we have. And I'm trying to understand, is there a point at which you'd say well, wait a minute, we shouldn't allow this to happen? Not just be sure we can mitigate it when it does.

MR. RECKLEY: And I think the answer is there may be. And this is the difference -- the difficulty you have in the hypothetical versus what we really think the world is right.

VICE CHAIRMAN RAY: Right.

MR. RECKLEY: In the hypothetical, the answer is definitely yes. In the real world, I'm not so sure that we're going to encounter those.

But, we will consider the parameters of frequency and severity and all of these other things that we have to consider as part of a decision to pursue a backfit. And we'll make a conscious decision that we think it might, or it's unlikely to make that result. And therefore we're going to pursue it or not pursue it.

MR. FRANOVICH: We wouldn't assume the reliability of a component in this case would be 100

percent either. In any kind of cost benefit test, we wouldn't assume that.

So if we had a high frequency event and there was a single success path and we turned out, we looked at that particular component of interest and determined it had lower liability, let's say it was only 50 percent reliable. We would try to balance that in some type of analysis to show how does that really weigh in? Maybe the reliability component needs to be improved. Maybe there needs to be another success path.

CHAIRMAN STETKAR: But only if you pass the arbitrary core damage frequency screen --

MR. FRANOVICH: Right.

CHAIRMAN STETKAR: For that backfit. Only if you pass that would you.

MR. FRANOVICH: It would have to be reflected and vetted in the baseline CBO.

MEMBER SCHULTZ: Other questions by the Committee? I'd like to move onto the next presentation.

(No response)

MR. SCHULTZ: Thank you very much. I appreciate the information and the update.

Our next presentation is differing view.

And we have the presenters that are here. Hi Suzanne.

Suzanne, are you going to lead the discussion?

MS. SCHROER: No.

MEMBER SCHULTZ: All right.

MS. SCHROER: Shelby will be.

MEMBER SCHULTZ: Fine, thank you.

MS. BENSI: Thanks. All right, so thanks again for giving us an opportunity to speak with you about our differing view on the subject COMSECY. We're going to present an abbreviated version of what we had -- or Suzanne had lead in terms of the presentation at the November 21 Subcommittee meeting.

While you see just Suzanne and myself setting before you, as you know, we're representing a very large contingent of fellow nonconcurring employees from a variety of technical disciplines and multiple NRC offices. So we're going to do our best to represent the team's views on this.

So our primary concern really centers on the dismantling of the systematic and deliberative process that we current -- we have in place to identify whether additional regulatory actions are required. This includes changes to the design or licensing basis of a plant, which of course the

tasking under Recommendation 2.1. And also the whole reason we issued a 50.54(f) letter.

This is being replaced with an undefined ad hoc and less rigorous approach and is eliminating the information we need -- we believe is needed to support regulatory decisions. It's a bit of a chicken or the egg question, right?

They're saying well, we'll figure out if we need to do an analysis. But we don't know if we need to do an analysis because we don't have the information to support that decision.

So currently Recommendation 2.1 is following a well defined processed. And a key component of this process is the integrated assessment. And when we say integrated assessment here, we of course mean JLD-ISG-2012-05 integrated assessment as described in our staff guidance.

And this is only required for sites that -- for which the reevaluated hazard is more severe then the design basis of the plants. So all plants aren't required to do this.

So the integrated assessment is a systematic, flood specific and graded approach that will allow us to understand several things here. First is the impact of the reevaluated flood on plant

safety. And understand -- and this has all sort of been alluded too in the previous presentations. On understanding the potential vulnerabilities and cliff-edge effects.

This is important, Bill had noted in his presentation that you know, while you know, we use these artific -- we use these stylized events for defining of a reevaluated hazard, the event that is consequential to the site may be something significantly less then that due to cliff-edge effects.

We don't know this if we don't do the integrated assessment. We don't know this out priority because we're not asking that question. So the integrated assessment will allow us to do that.

It's going to allow us to determine whether protection is adequate, identify safety enhancements. This is -- is there any easy solution to sandbag the entrances to the diesel generator building instead of going straight to FLEX? So we're going to look at those options and identify those.

And of course it's going to allow us to gather the information we need to support a decision to modify, suspend a licensee.

VICE CHAIRMAN RAY: Does doing those

things prevent or discourage or make more difficult doing the Phase One mitigating strategy implementation?

MS. BENSI: This does not preclude Phase One mitigating strategies. That can be done independent of this effort.

VICE CHAIRMAN RAY: Because that is the issue it would seem. This gets in the way doing what we can do quickly and that would be beneficial to do.

MS. BENSI: I think you have a good point there. And that's one of the things I think that is being overstated, is the efficiency gained through the implementation of the COMSECY.

So first and foremost, you have to know the reevaluated hazards. So that's going to bottleneck no matter what we do. So we need to understand the -- that. If the Commission approves the rule making to address -- to have the mitigating strategies the R-2.1 hazard, that's going to be put in place regardless of whether or not we perform the integrated assessment.

It wasn't brought up that there's interim actions in place. So if a licensee determines that the reevaluated hazard is in excess of the design basis at the time that they submit their hazard

reevaluation report, we also ask them to define interim actions taken across to bridge the gap while we perform the integrated assessment.

So those are already in place. I also don't know that there's this guarantee that there's not going to be refinements to the hazard. Backfit has never been taken off the table. So there is always going to be that issue out there. So I don't know why we're guaranteeing that licensees aren't going to perform further refinements to the hazards in response to the approach in the COMSECY.

The other thing I think we need to notice is a staggered approach. We keep talking about we're pushing out 2017 deadlines. The first set of licensees were due to have their integrated assessment submitted this March. The next set in March 2016, and the next set in March 2017.

So the notion that we are going to be pushing this out for all licensees is just not accurate. We've always intended to have these grouped and staggered in. And so had we not -- had we been proceeding on our path as currently projected, we would have a good portion of the sites submitting their integrated assessments this March or maybe with a slight delay.

But we're not talking 2017. So --

MR. MITMAN: If I could add something that Shelby talked about briefly. Under the current regulatory regime, the order EA-12-049, requires that the licensees put in place mitigating capabilities. And for the most part as was discussed previously today, a lot of that work is already done.

So that's there today. And that was intended to protect the plants against beyond design basis external events. Now that capability will not be ignored if it's ever needed to respond to a design basis event.

So a layer of protection as has been discussed before has already been put in place. Now under the current regime, the second step was the Recommendation 2.1 which required that the licensees go out and revisit the flood hazard and look to see whether something more substantial should be done, okay.

That's in my opinion where the big change is being made or proposed under the COMSECY. Is that that -- under 2.1 flooding, which I think the direction was to revisit what I would call the design basis, not beyond design basis, but the design basis, to take a look at that. Revisit that based on the

insights from Fukushima. That the design basis of Fukushima was inadequate, okay.

So under 2.1 and in my frame, you re-look at the design basis to see whether it has to be changed or not. And what the COMSECY is suggesting is that we forego that look back at where the split between design basis and beyond design basis is. And we don't have to go back and look at whether we need to beef up the design basis.

Now if there are design basis issues, then in my opinion, a FLEX like approach is not enough. You know, a single commercial grade or two or three commercial grade pumps stored in protective locations is not the same as an ECCS. It's not the same as safety grade diesels and multiple electrical distribution systems.

VICE CHAIRMAN RAY: Okay. One thing you left out though I believe is that in the COMSECY approach, we get the mitigating equipment, mitigating strategies equipment upgraded to the reevaluated flooding hazard. At least that was my understanding. It wasn't just to the current design basis.

MS. BENSI: Correct.

VICE CHAIRMAN RAY: One of the appeals, if I can say it that way, is at least the notion that

that's now on the table to be ordered.

MS. SCHROER: And I think that that's something -- that's a good point. And in the nonconcurrence we actually wrote that we support protecting the mitigating strategies --

VICE CHAIRMAN RAY: Understand.

MS. SCHROER: Equipment up to the reevaluated hazard. So that's not something that you know, we have a problem with the COMSECY. We think that's a really good step forward.

MS. BENSI: And they're often treated as mutually exclusive for some reason. And that's a troubling point I think.

MEMBER RICCARDELLA: You know, I question -- you seem to be saying well the COMSECY eliminates the integrated assessment. And I judge what I heard this morning from industry was that it's not that they're eliminating the integrated assessment, they're just doing it differently then ISG-12-05.

And specifically what I thought I heard them say was well, we're going to -- 12-05 requires you to evaluate all plant SSCs. And they said well, we're only going to evaluate the SSCs that are essential to containment and for core cooling capability.

So they are doing somewhat of what they call an integrated assessment. It's just a different integrated -- just a -- perhaps a little less comprehensive then the one that we're asking for here.

MR. MITMAN: Well, we've got a little bit of a moving target problem here. You know, the nonconcurrences were written, I don't know, six weeks ago. And the industry is I think starting to respond to that.

So what we saw today is not in 12-06 today that's been endorsed -- written by NEI and endorsed by the NRC. It's a new revision to NEI-12-06 that the staff hasn't -- I don't think the staff has seen yet.

So we don't know what's in that. And so we're a little bit at a loss to how to respond. But --

MEMBER RICCARDELLA: So but maybe we are moving in somewhat to a -- to some middle ground here.

MS. BENSI: Because see I think in a part. But you said it's not as comprehensive. But there's more then just comprehensiveness. There's rigor. You know, there's the systematic approach.

MEMBER RICCARDELLA: Yes. I don't know if you were here this morning, but I asked them were they going to do a peer review?

MS. BENSI: Yes.

MEMBER RICCARDELLA: Were they going to do Appendix B and they said no. But they are going to submit it for review.

MS. BENSI: Yes. You know, and I think though that there's an important distinct -- you know, you submit it for review, but we have to decide on what our standard of review is, right? And you know, in the sta -- the interim staff guidance outlines that.

And I'll give an example, the evaluation of manual actions in accordance with the FLEX validation guidance is not as rigorous as the Appendix C evaluation. It uses a feasibility target. Not a reliability target. That's a very different threshold.

And so I think you know, we have -- those specific technical details are very important. And even if they submit it for staff review, I'm concerned about what we're going to use in order to review that. And if it's going to deviate significantly from what the technical experts have said today.

MS. SCHROER: And I would just like to point out that on enclosure two of -- page one of enclosure two of the COMSECY, and I mentioned this in

the Subcommittee briefing, that it does say focusing the flooding reevaluations on the SSCs serving key safety functions within the mitigating strategies could in many cases improve the efficiency of the NRC's regulatory process by eliminating the need for a broader assessment of the plant response as described in current plans and staff guidance for integrated assessments.

So it's kind of buried back in the enclosures. But that is definitely the intent.

MS. BENSI: All right, so you had cued in here and we're talking about the fact that the COMSECY eliminates, removes the assessment. We're not longer systematically considering flood protection of safety related equipment, EDGs as an example there, we are not performing a flood specific evaluation mitigating and you see that asterisk's there.

And so it has been alluded previously, when we say mitigating under the integrated assessment, this is not synonymous with mitigating strategies. Mitigation is defined more broadly then mitigating strategies.

This is an important point. You know, we view it commensurate with the use of miti -- if they were to credit any portion of mitigating strategies,

it would be reviewed commensurate with issues as a first line of defense against the reevaluated hazard.

The COMSECY approach of course results in these non-safety related mitigating strategies as prescribed in the order as the only defense against the reevaluated hazard. This includes the potentially less severe, more frequent event.

So we keep talking about the reevaluated hazard which comes from these stylized events. But having -- keeping in mind that there may be consequen -- significant consequences to plants at more frequent, less severe events.

Jeff brought up, looking at comment earlier today that there was a plant that loses its ECCS at a flow half of the PMF. So I think that's an important consideration. It's something we will not know without the performance of the integrated assessment.

A couple of notes there that I wanted to draw your attention to, is that the reevaluated hazards are based on present day design basis methods. You know we refer to these as beyond design basis events. And it's sort of a chronological distinction. These are design basis methods.

The other thing we need to -- I think is

important to emphasize, is that some of these events that are more severe then the design basis are the same events that are appearing in the FSAR. It's just we've reevaluated that event and found out the flood is higher or there's more debris.

So these -- you know, we call them beyond design basis events, but keeping in mind the context and the fact that these may be the same events that are part of the current design basis of the plant. We just -- you find new methods -- you know, new tools in developing more severe flood events.

The other note you'll see there is that you know, mitigating strategies were intended to be additional defense in depth for these beyond design basis rare events. We're now proposing to use them as the primary first line of defense against this reevaluated hazard based on design basis methods.

And so we think -- that's the crux of the matter is that we believe they need to be review -- even if mitigating strategies does become the solution, it needs to be reviewed in a way that's commensurate with that use.

And then you just heard the presentation. We talk about this undefined approach. This well, don't worry, we've got something in our back pocket we

can always use later. We don't have confidence in this undefined approach.

We believe it relies on an undefined staff process to initiate regulatory action. It assumes that we already know what plants have problems without doing an evaluation to ascertain that information. And in the end, if the approach is taken as described in the COMSECY, we just won't -- we don't believe we'll have sufficient information to know whether a regulatory decision is needed in order to modify, suspend or revoke a license in accordance with the 50.54(f) letter.

VICE CHAIRMAN RAY: So the picture that ends in a box called disposition, presumably a written disposition, that's what we're talking about now. What is the process for getting there?

MS. BENSI: And you don't know what you don't know.

MEMBER SCHULTZ: Well, but all of what you described in terms of identifying the hazard and performing an evaluation pre or post or -- can be done anywhere along the way. But the way it's described in the COMSECY is it's done as part of the process.

MS. BENSI: It was -- I'm confused by the question. Because it first requires --

MEMBER SCHULTZ: The charge that we just showed --

MS. BENSI: Yes.

MEMBER SCHULTZ: It did show an assessment process as an integral part of the overall evaluation.

MS. SCHROER: And I think that's a great point Dr. Schultz. Because that process that was depicted on the slides that you just saw, is not at all discussed in the COMSECY.

So there's been this illusion that there will be you know, this defined process. But when you actually read the COMSECY, it says it's going to be on a case by case basis, scenario specific like Bill mentioned.

So if there is a clearly defined process within the COMSECY, I think that we would be -- maybe have a little different opinion. But since it's so vague in the actual COMSECY, there's no confidence that it will be implemented in such a structured way.

MEMBER RICCARDELLA: And you're referring to the latest version of the COMSECY that was submitted?

MEMBER SCHULTZ: Yes, I didn't find it that vague. But I think that perhaps I'm depending upon the extra clarity that was provided this morning.

But what you're saying is that it -- if it's not sufficient clear that it's an integral part of the overall process. That staff reviews associated with the process described in the COMSECY is insufficient in your view.

MS. BENSI: I think that the crux of the matter is whether we would have sufficient information at that point in order to perform that evaluation. So you -- all we would have at that point would be the reevaluated hazard. We would know what the reevaluated hazard is. But we would not have accessed the impacts of that on the plant.

So it's -- you're actually putting this decision point in before you perform the assessment of the impacts of that flood on the plant. And so it's a bit -- it's the issue is about you know, do we have sufficient information at that point to inform a regulatory decision.

MS. SCHROER: And I think one thing that Bill just mentioned that was a little confusing for me, is that he said one of the reasons that this COMSECY was initiated was because it was -- there was this fear that we would get to the end and not be able to make a regulatory decision because we wouldn't have the information in that little box that was on the

side.

But I think the COMSECY approach proposes that we use less information to make a regulatory decision. So I think that's the concern here.

VICE CHAIRMAN RAY: Okay, but if -- if one were to imagine, and I did ask some question about this, what is the process that one uses to -- and I realize this isn't in the record, but any event, I'll just -- to follow this path over here in the unit disposition, what is the process?

The answer was, well this is what we do all the time. That comment was made often. Or several times. What do you feel about that being true?

MR. MITMAN: I work for NRR, okay. And to take an issue, there was a short discussion earlier today about a plant that had an increased flood evaluation. It took a long time to get where we finally got.

But that was an incredibly difficult process to go through because there is no requirement to take those actions. You know, there's a presumption of adequate protection since we've licensed the plant.

And so with that particular plant that the

flooding issue a couple of years ago, you know, the staff had to come forward and make the case that you know, there's a problem here. And we really think we need to dig deeper. And it was very difficult to get the agency to move to investigate that case.

And so what Bill has suggested is we'll just use that process. And what 2.1 Phase Two has done, is it says every plant has to revisit that if the hazard has gone up. Then every plant has to go back and look at that.

And so now there's -- it's incumbent upon the staff now to do the evaluation. Look at what the protections and the mitigation capabilities are. And decide whether that level of protection and mitigation is acceptable.

MS. BENSI: And I would further note that I think that we already have exercised that process. The event at Fukushima happened. We had the NTTF you know, who talked with many of the technical staff, determined that this type of action was needed.

That was then followed up on by subsequent actions by the staff in communications with the Commission. And in the end we said, this you know, we have a basis to go forth and ask this question.

So I think -- I would argue that we've

already exercised that process. And our technical staff has come to the conclusion along with managers, that this is the appropriate path forward.

So I would say that we've already exercised the process that we have in place to kind of see.

MS. SCHROER: And I would just say not just the technical staff, but also we had several communications with industry developing that process. Shelby and I were talking the other day and I think we have something like 12 public meetings.

MS. BENSI: 14.

MS. SCHROER: Oh, 14 -- big industry --

MEMBER BLEY: At the Subcommittee meeting, Jeff described the integrated assessment as a graded one. And said it already does that.

Some folks from industry have indicated they don't think it's sufficiently graded. That it pushes you to do a lot of work in cases where the potential scenarios might be much more easy to handle or describe or maybe they're not that far beyond their original design basis. And some simpler approaches could be applied.

Do you have any thoughts about that?

MS. BENSI: So the integrated assessment

is graded. So if you're -- if we're talking about conventional flood protection permanent passive barriers, we're talking about conventional engineering evaluations of that flood protection, including crediting what you've already got on the books to the extent that it's applicable. And as you move towards less conventional strategies, higher reliance on manual actions, the burden does increase.

We still think that we're in the right place. We have asked industry a number of times at public meetings and said if something is coming across in that guidance as unnecessarily onerous, please bring that specific text to our attention so we can make sure that everybody's interpreting it appropriately.

So we have not had that communication with -- no matter how many times we've asked that, almost every public meeting that this has come up, we've asked for specific examples. And we have not received specific examples of what is causing things to be unnecessarily onerous.

So you know, we don't intend it to be unnecessarily onerous in simple cases. So we had some examples that industry has developed that seemed to exercise that graded approach you know, simple cases

had simple evaluations. And the complex case had a much longer evaluation. So it seems to be working in the sense that we are seeing a graded approach.

So I guess that's where I stand.

MR. MITMAN: I think, if I could add to that please. If there are ways to streamline the process, I don't think there's anybody on the staff that would argue with faster, easier, cheaper ways to do the process.

But I think what's being proposed in the COMSECY is to throw the baby out with the bath water. It's -- what you've got is too hard. Let's not do anything. Let's just use FLEX. Protect it against the hazard and call it a day.

To me that's not enough.

MEMBER CORRADINI: You answered my question. And so let me ask one final one which is, so North Anna was brought up as an example this morning. Has that been looked at by the staff? Or has that been officially submitted yet?

MS. BENSI: It has not been officially submitted as an integrated assessment.

MEMBER BLEY: Have any?

MS. BENSI: We have one integrated assessment that was submitted. The licensee opted to

submit it right along with their hazard reevaluation report.

MEMBER REMPE: And were you given a copy of it?

MS. BENSI: Yes. But they're not official -- they were not officially -- were not officially due until March 2015. And as I think you know, that there was a letter that was issued that granted a six month extension on that.

MEMBER SCHULTZ: That is not dispositioned yet? That's not gone through your process. It's been submitted.

MS. BENSI: Correct. We have been asked to pause that process.

MR. MITMAN: And I think you know, I don't know where North Anna sits on the spectrum of protection and mitigation capabilities. But I have a high degree of confidence that it's not on the bad end of the spectrum.

And to come in and use a plant that they know is pretty well protected already and to try to use that as an illustration about how the whole industry should respond, I think is insufficient.

MEMBER SCHULTZ: Other questions from the Committee? You have one more slide. But I think it

says summary slide that's there now.

MS. BENSI: Yes, this was -- this slide simply summarizes our concerns.

MEMBER SCHULTZ: We saw that in the Subcommittee meeting that points to the five and six as the key elements that you wanted to focus on. I think you've done a good job doing that today. Thank you.

MR. MITMAN: Could I add one last point? There's a lot of talk earlier today about doing -- looking at the frequency of the events. Under mitigating strategies, under 2.1 as it currently exists with the integrated assessment, there's no requirement to look at frequencies.

As a PRA guy, I'd love to see frequencies. I'd love to see a hazard curve. But there's currently no plans and no direction and no requirement that the industry do that.

MS. BENSI: And we structure the integrated assessment with knowledge of that limitation. But also to provide us with the information that would be useful if we needed to go down the backfit route.

So that was always in the back of our mind when we structured the guidance.

MEMBER SCHULTZ: Thank you. We have one more presentation.

Gary also provided his presentation -- or a presentation to the Subcommittee. And we had a longer time to discuss your comments and thoughts and recommendations Gary.

We'd like to give you the opportunity again to summarize that for the Committee because not everyone in the room was present at that presentation. And we want to get it on the record again. Or any other thoughts that you might provide today.

MR. HOLAHAN: Thank you, very good. And with me is Scott Flanders, who is the Division Director responsible for flooding and seismic assessment in most of these things you've heard today.

MEMBER SCHULTZ: Thank you.

MR. HOLAHAN: And he and I and our office director, Glen Tracy, submitted a nonconcurrence on the paper as it existed in I think around the 10th of November. So in part, there are some differences between the official paper that everyone has publically available and the version that was non-curative.

So I thought I would touch upon that. Because that's something that we didn't have at the

time of the Subcommittee meeting. So I'd just like to start with thanking the Committee for the opportunity to speak to them. This is a very important issue, not just because flooding and external events are important, but also because there's quite a lot of regulatory philosophy involved in the changes that are going on.

To me some of it is unfamiliar interpretations of regulatory requirements and mitigation in place of protection. And beyond design basis in place of design basis, of look like strange regulatory thoughts. And I think that's part of the reason that a nonconcurrence at this level, at the senior management level is unusual.

I think usually issues are worked out if it's a matter of what is the most efficient or sufficient way of dealing with technical issues. Those can usually be worked out.

I think this nonconcurrence in a way represents a matter of principal. There are some regulatory and safety principals at stake here that I think couldn't be compromised. And I think that's why it's unusual, but an important to state these positions.

I have the same slides I presented with

the Subcommittee, but I propose to go three times a fast through. The next one -- the next slide please.

CHAIRMAN STETKAR: You -- you --

MR. HOLAHAN: Oh, I have them? Oh, wait, and make sure we have this. I was trained the last time, okay.

CHAIRMAN STETKAR: Remember, this is lean and mean.

(Laughter)

MR. HOLAHAN: Just a reminder that the Near Term Task Force recommendations were for safety through defense in depth. In fact that's even the name of the chapter where all of these requirements or recommendations reside.

And the recommendations were spanning protection, some say prevention of events. But usually we say protection from external events. Mitigation, dealing with severe accidents. And emergency preparedness. It's -- next.

So this is meant, and it was meant to be a collection of recommendations with defense in depth in mind. The Task Force recommendations do see the value of mitigation strategies. And there's -- but they don't see them as a substitute for prevention or in fact for emergency preparedness or for any other

levels of defense in depth.

In fact it seemed to me you could make a perfectly rational argument, at least according to what is presented in the SECY paper. If the mitigation strategies used are so good, I don't know why we are working on emergency preparedness improvements either, right?

So either you're looking at a full range of defense in depth or you've picked on and you're going to rely on it at the expense of what you might do in others. But also remind the Committee that not only with the Committee's input and other stakeholder meetings, the Commission did support the full range of Task Force defense in depth recommendations either through orders, rule making or at least for the information requests that you've heard for 50.54(f) for the 2.1 issues.

Okay. And what you heard about this morning was how the COMSECY proposes to change what was the path that the staff was originally on. And it in fact limits the way flooding events were dealt with by focusing -- and I think the paper even uses the word like primarily focusing, in fact it's mentioned over and over again, that the refocus of the flooding concerns is on mitigation strategies.

At the draft -- at the nonconcurrent stage, and in fact even the "white paper" that was presented to the Committee in its meetings in November, I think we would interpret that that was pretty close to eliminating the systematic reconsideration of external events.

One difference between the paper as it was discussed before and as it has finally come out is, there is further discussion of the need -- and it's a new section in the paper actually, which talks about -- it's on page eight if you ever want to look at it. It says the staff will address as a separate matter, the existing design basis and licensing basis for flooding and to see if it continues to be acceptable.

So there -- presumably that sounds like looking at prevention. It says it will be done through the backfit process. It then goes on to say that we will include the effectiveness of what was done in mitigation strategies to make some judgement about that. Which seems to be they're mixing these issues again, right?

So either you're going to judge the design basis, the importance and the value and the appropriateness of protecting the plant against floods on its basis. Or you're going to use mitigation as a

substitute.

And the paper -- part of the difficulty with the paper, is it's a bit confusing. And in fact I think even the presentation -- sorry Bill, and these are all staff that I work with very much and I know very well. But I think this paper is inherently confusing on how it deals with some regulatory issues.

It treats backfit in an odd way. In one sentence it will say of course backfit means adequate protection and compliance and cost justified. And in the next sentence the compliance and adequate protection are never seen again. And we're very close to you know, back to cost justified.

You heard the answer to questions. We're going to be talking about ten to the minus something and safety goals in judging protection. Well, that's not entirely -- Mr. Flanders has been --

MR. FLANDERS: Not intentionally.

MR. HOLAHAN: Been elevated to yellow-card status pretty good.

CHAIRMAN STETKAR: He now officially exists.

MR. HOLAHAN: He's been yellow-carded.

MEMBER CORRADINI: Ah, now but it's got to work.

MR. HOLAHAN: Yes. Yes. Very good. Well, he's going to say he agrees with you. But yes, that's right.

So I think -- I would comment on the current paper in a different way from the second bullet. Rather then say it eliminates the systematic reconsideration. I'm still not sure there's systematic reconsideration. There is a commitment to do something, to address in some way every plant that has a flooding reevaluation beyond its design basis.

But I think it's fair to say it's a less defined, maybe ill-defined process. It's certainly not the integrated assessments that were -- that were discussed this morning.

So it moves from a more defined to a less defined process. And it's not to say that a -- such a process couldn't be developed. Perhaps one that's more efficient then the current path. These are all possibilities. But I just don't see them ever being worked out.

VICE CHAIRMAN RAY: Gary, this is the same matter I was asking about at use?

MR. HOLAHAN: Yes. Absolutely.

VICE CHAIRMAN RAY: Okay. Just want to make sure I'm -- hearing you talk about the same thing

I was.

MR. HOLAHAN: Absolutely. And you asked the question at the Subcommittee, I thought it was quite appropriate to say how does backfit fit into all these arguments? And what does backfit mean?

And so long as you think that -- if you think that backfit means cost justified backfit, you see this whole issue in a different light, which says I'm going to do something to reduce risk. I'm going to pick the thing that costs the least and has the most effect.

But if you think that adequate protection and compliance with the licensing basis of a plant is important, and the reason it's important is because it's a fundamental element of defense in depth, then I think you see an entirely different picture of how you should balance these issues.

So I don't need to reiterate this too much. Can we go to the -- I do want to make two points. The nonconcurrence filed by Scott and myself and Glen does specifically acknowledge that we do support the idea of moving forward with the 4.2 mitigation strategy using the reevaluated flood level.

And I think you heard today, there's -- no one disagrees with that. And we ought to be moving

forward. You could say that some people say we intended to do that all along.

Some people say that's a change in position and that -- but it seems to me that is consistent with the orders. It's consistent with the expectation of the orders. It's possible that some other approach to establishing a beyond design basis flood could have been done.

You could say well look what they do in Japan, they say 15 meters, high flood and just everyone does the same thing. I think this is entirely a reasonable and rational approach to establishing a mitigation strategy protection.

But we think -- even though we think that that's a good step, we think this step is not enough. It's also necessary to worry about protection of a plant. That's a fundamental part of the licensing basis. It's in every license. It's in the regulations. It is general design criteria too.

And to step back from protection because mitigation seems to be such a desirable thing, to me this is not an either/or issue. It should be -- it should be appropriate level of protection and mitigation. Let's see what else I will say. Okay.

So, it's the simplest version of this.

And I think this whole issue could use a little more simplicity. There's an awful lot of confusion and complication in it.

It is in a simple basis for saying we can't support this paper because it doesn't value both mitigation and protection prevention to it. And we think that that is an important thing to do.

Both are important. They're both of them are essential. They're both old, ancient and well established regulatory principals. And I think they should both be treated and dealt with in a way.

It doesn't mean they have to be dealt with at the same time and in the same way. And I can -- I think some of us could even be supportive of -- well the fact that even now, you heard Shelby mention that the dates -- the mitigation strategies and the 2.1 reevaluation of design basis were never on exactly the same schedule.

And that's not such a problem. And if we can find better ways of doing things that might be a little slower or maybe more efficient in some other ways. Or if we could bring some other technology to them, then all these are good alternatives.

But right now we don't have clear alternatives. We have do mitigation and do perhaps

something. But something not well enough defined in the protection area. So I --

MEMBER SCHULTZ: Gary, one question on this slide.

MR. HOLAHAN: Please.

MEMBER SCHULTZ: We have confused the terminology and we talked about that. So it -- you said mitigation and then you said protection and that's prevention.

MR. HOLAHAN: Yes.

MEMBER SCHULTZ: Now, in the mitigating strategies, mitigation is prevention.

MR. HOLAHAN: Okay, let me try. Because this is -- this is a confusing topic. I can tell you that on the Task Force there was a discussion of how to talk about these things.

If you go to an IAEA standard or something that talks about levels of defense in depth, it's usually in terms of prevention, mitigation and then you get to severe accident and emergency preparedness.

MEMBER SCHULTZ: Correct.

MR. HOLAHAN: In our own Reg guides that deal with the -- deal with like flooding and things like that, with external events, they use the terminology protection. So in my mind, I understand

that prevention of events is the first level of defense in depth.

When we talk about external events, we usually talk about protection of the facility from those events as a way to get to -- right, to prevention. And the word mitigation I think is used in different ways, right.

We have design basis mitigation and we have beyond design basis mitigation. So in these senses, protection means keeping the water out or making the plant at least tolerant to flooding conditions. And mitigation in this sense means basically beyond design basis mitigation strategy that is talked about in Recommendation 4.2.

MEMBER SCHULTZ: And the intention of that is to protect the core of the spent fuel pool and all that?

MR. HOLAHAN: Yes. And in all of it of course is to protect the public health and safety. And so --

MR. FLANDERS: If I could add?

MR. HOLAHAN: Prevention, protection, mitigation, everything really has protection in some sense there.

MR. FLANDERS: If I could add. In 2.1 the

focus was on protecting the plant in flooding and looking at how potentially you would need to mitigate it. So the scope of it is much broader then the scope for which you're talking about in terms of mitigating strategies.

Where mitigating strategies really talk about prevention in that context, is primarily focused as you said on core cooling. And they're protecting certain equipment associated with supporting their ability to maintain core cooling.

In the context of flooding, as Gary said, we're looking at protection of the facility, prevention. So there's an aspect of protection that we would look at in terms of other safety related components that may prevent you from needing to go to and actually use that FLEX equipment.

And I think one of the fundamental challenges we have with the approach in the paper is that it just says it's not necessary to actually look to see if you can protect for example, your diesel generators or some of your other electrical distribution systems or things of that sort that would prevent you from even needing to rely on your FLEX equipment.

So you're ability of your defense in depth

you've essentially -- you're not going to look at that at all, you're just going to accept that those things are lost. And then the next step is okay, so now how do I maintain core cooling using solely our mitigation strategies equipment?

And you know, going back and looking at the recommendations, if you see -- Recommendation 2 and Recommendation 4 are separate recommendations. Recommendation 2 as Gary was saying, was looking at how to -- reevaluating the hazard from flooding or seismic events and saying what does that mean to the plant? Is the plant's design basis not adequate at this time?

And to look at this integrated assessment that the staff spoke of, was to look at that in the sense of trying to figure out how much protection, how much mitigation needed. And then to make some judgements on how you protect the facility.

As opposed to -- and then recognizing that mitigating strategies was something that would be for events that are beyond line based events. As staff said earlier, the reevaluated hazard is using the same criteria used to license plants today. The same criteria that we pretty much used, Regulation 1.59 has been out since 1973, right.

The draft Regs in 1973, official final version 1975, it's pretty much the same guidance. And so many -- that's why many of the hazards are in fact the same. And so it was a question of okay, do we have it right now, recognizing that we have more information, we have better tools to assess how these events could potentially affect the site.

So I think as the staff talked about, the scope is much broader when we talk about protecting and mitigation here as opposed the mitigating strategies.

MEMBER SCHULTZ: A simple question. Just looking at the hazard, back in 1975 did we use the hazard that we discussed this morning with regard to that level of rainfall in that period of time?

MR. FLANDERS: So in 1975 -- I wasn't here for the first part of that. But if I understand correctly, North Anna, they were talking about the local intense precipitation on it.

MEMBER SCHULTZ: Yes. Correct.

MR. FLANDERS: Okay, and I'll look to my staff to make sure I have this right. But for local intense precipitation that was an issue that was I think recognized in the '80s time frame. And so for some plants, local intense precipitation is an issue

that was not necessarily looked at when these plants were licensed.

So as a part of this reevaluated hazard, activity that is new for many of these plants. But when we talk about the other events such as riverine flooding, a dam failure, hurricane events, seiche, all of those are the same basic events that we looked at when plants were originally licensed.

And in many cases for those plants who were GDC-2 plants, they pretty much use the same criteria that we use today to establish a hazard. So in many cases a hazard is exactly the same with our understanding that the water level and the debris and other associated effects is different. We have a better understanding.

So local intense precipitation is a unique piece. It was interesting that they brought that as an example. But that's a unique aspect. It is new for all -- for many of these plants.

MEMBER BLEY: Can I ask you a language question? We have a design basis. Now we have a reevaluated hazard.

MR. FLANDERS: Yes.

MEMBER BLEY: Some people say that's part of the licensing basis, which I haven't seen

completely defined somewhere. And the real point is, at what point would one think in a reevaluated hazard ought to get rolled back into a design basis and you know, plant modifications be there to provide the protection that you're talking about in this chart? And is it important to deal with those language issues?

MR. HOLAHAN: Let me add some confusion before I try to clarify. That is there's also difference between design basis and design basis events.

So as you heard, the reevaluated hazard would the basis for protecting mitigation strategy equipment. That is a design basis, right. It would be whatever levels or timing or whatever.

If that goes into building a wall or placing a piece of equipment that is design basis. It doesn't make the event the design basis event.

MEMBER BLEY: Okay.

MR. HOLAHAN: It seemed to me the reevaluated hazard becomes a design basis event when we go through some regulatory process that forces it to do that, right. And it seems to me that that isn't entirely necessary, right.

What's important is that the design basis

gets a reevaluation. That we decide whether it's adequate or not. To the extent that a different flooding level from some other event ought to be the design basis event providing adequate protection that does redefine it as, right.

There is something else called a licensing basis which means it's not the design basis event, but it is in the regulatory process. It has some other role. And it is captured as a requirement in some way. And it is possible to do that as well.

But whether that is an appropriate substitute for a design basis event, I think is part of the back end of this process. First you understand what could happen and what are the consequences. And then you decided how do I want to deal with this in a regulatory process?

So the Commission decided that extended station blackout should be an adequate protection issue. And that gives it a certain role. That didn't exactly put it in Chapter 15. It's not a design basis event.

And the assessments you can be quite sure are not being done by single failure criteria or Appendix B quality or reviewed and approved methodologies. It has none of those design basis

event characteristics.

So I would say it's certainly the reevaluated flood as it plays into the design conditions for the equipment is all -- is in the requirements. It's all licensing basis. But doesn't have the same role as what you would think of as a classic Chapter 15 you know, ECCS kind of treatment.

MEMBER SCHULTZ: Other questions by the Committee?

(No response)

MEMBER SCHULTZ: All right, I'd like to ask for public comments. And we'll turn on the phone line, bridge line so that individuals on the bridge line can speak if they wish.

While we're doing that, if there's anyone in the room that would like to make a comment for the Committee, now would be the time to do so.

(No response)

MEMBER SCHULTZ: Hearing none in the room, the bridge line should be open momentarily. Is the bridge line open?

If you're on the bridge line, could you please just make some noise so that we know that you are there. Is anyone on the bridge line, if so?

PARTICIPANT: Yes I am.

MEMBER SCHULTZ: Hi. Would you like to make a comment for the Committee? If you'd like to, please state your name.

PARTICIPANT: No thank you. I just wanted to let you know that there is still someone here.

(Laughter)

MEMBER SCHULTZ: We appreciate that.

CHAIRMAN STETKAR: And we really appreciate that, thanks.

MEMBER SCHULTZ: For anyone else on the bridge line, we know that it is open now. This is how we find out. Is there anyone who would like to make a comment? And if so, please state your name and do so.

(No response)

MEMBER SCHULTZ: Hearing no comments at this time, John, I'll turn the program to you.

CHAIRMAN STETKAR: Thanks, Steve. We -- we'll keep on our schedule. I apologize, eat quickly, we will recess until 1:15.

(Whereupon, the above-entitled matter went off the record at 12:46 p.m. and resumed at 1:19 p.m.)

CHAIRMAN STETKAR: We are back in session. The first topic of the afternoon is regulatory gap

analysis of the NRC's Cost Benefit Guidance and practices, and Harold Ray will lead us through that session.

Harold, it's yours.

VICE CHAIR RAY: Thank you, Mr. Chairman. in August 2012 the staff recommended for Commission approval updating of the existing framework for consideration of economic consequences. In approving the proposal in March 2013, the Commission also directed the staff to provide a regulatory gap analysis prior to developing new cost benefit analysis guidance.

Earlier this year the staff issued a plan for this work which is to be conducted in two phases. The first phase focuses on structural changes, incorporation of cost estimating best practices and administrative issues. The second phase addresses the enhancements that need further consideration prior to being included in Cost Benefit Guidance.

Recently the Committee reviewed and commented on the qualitative consideration of factors. Now we have an opportunity to review the staff response to the Commission direction to provide a regulatory gap analysis. This is being provided to the Commission for information. Both the qualitative

consideration of factors and the results of the gap analysis will provide input to the second phase of the staff plan for updating the guidance.

The Regulatory Policies and Practices Subcommittee reviewed an earlier version of the draft gap analysis paper. Mike Snodderly sent members a redline markup of this version to reflect the version available earlier this week. As of then the paper had not completed the management concurrence process.

Finally, we will discuss at P&P tomorrow if and when the Committee will respond to the final SECY that we'll hear about today as it is sent to the Commission.

With that, we'll begin the presentation and Aby Mohseni will lead us off.

MR. MOHSENI: Thank you. Appreciate it. Good afternoon. Hopefully this particular meeting will not be as controversial as the earlier one in the morning. I'm Aby Mohseni, deputy director for the Division of Policy and Rulemaking in NRR. And Thank you for the opportunity to brief you today on the staff's regulatory gap analysis cost benefit practices across the Agency. We met with the Subcommittee on this very topic in October and we did receive some very constructive feedback that we have incorporated.

Staff presenters today are Alysia Bone, project manager in my division, who will provide a presentation on this paper. And then Fred Schofer, the team lead for the Regulatory Analysis Team. And Alysia will answer questions on the analysis throughout the presentation.

A little bit of background. This paper is in response, as you said, to SRM-SECY-12-0110, Consideration of Economic Consequences within the U.S. NRC's regulatory framework. The NRC's Cost Benefit Working Group comprised of representatives from seven different offices performed the analysis. The staff wanted to use this analysis to not only identify differences in cost benefit practices across the Agency, but to also internalize the messages the staff has received from ACRS and the Commission in the past.

For instance, in this paper the staff emphasizes the importance of quantifying uncertainties associated with reg analysis. Also the staff notes the importance of making improvements to its quantitative estimates in general. The staff has incorporated additional feedback received from ACRS members on this paper from our last October meeting, and the staff will highlight some of those examples in today's presentation. This gap analysis is a step in

the staff's overall plan to update Cost Benefit Guidance.

Thank you again for the opportunity to brief you on this information SECY.

MS. BONE: Thank you, Aby. As Aby mentioned, my name is Alysia Bone and I am the project manager for this initiative. We do have several members of our working group here in the audience to help answer questions as we go through the presentation.

On slide 2 the purpose of today's briefing is to provide you an overview with the SECY paper regulatory gap analysis of the NRC's Cost Benefit Guidance and practices. So for our outline we'll first start with a brief overview and status of the package. Then we'll go into the background gap analysis scope and methodology. I'll talk about a couple of key results from our analysis and then I'll highlight some of the differences and enhancements for Cost Benefit Guidance that we uncovered during our analysis. And then I'll close with some remarks on our path forward.

On slide 3, overview and status, I just want to point out here that this SECY paper is an information SECY paper, so it doesn't contain any

options or recommendations at this time. There are three associated enclosures which I'll go through in more detail. We touch on the purpose of each of those enclosures in this presentation.

The status of the paper is that it is near completion. We have a few final edits and updates and comments to incorporate, but we anticipate that the SECY paper will be finishing up very shortly and go to the Commission soon. However, for the purposes of this meeting we have made a version publicly available, a draft version publicly available, and that is found in ADAMS. I can give you the ML number right now. It's at ML-14266A233. And that's the SECY paper itself. This is a version that was also provided to you earlier for review again.

On slide 4 we have a few notes --

VICE CHAIR RAY: Not a lot earlier I must add.

(Laughter)

MS. BONE: Happy Thanksgiving.

(Laughter)

MS. BONE: So we did receive the benefit of having early ACRS Subcommittee feedback from some of the members, which we really appreciated. And we wanted to provide a slide here that highlights a few

of the changes we did make in response to that feedback.

So I will step through the rest of the presentation and highlight where we made those changes, but just to start off we did complete a summary table of the differences in NRC cost benefit regulations, practices and guidance, which we understood would be kind of a handy tool to highlight some of the staff's findings in our analysis. That's in Enclosure 2.

We clarified the basis for one of the key conclusions we made, which is that the statement that the cost benefit regulatory framework is sound. We provide a little more context for that. And we expanded the discussion on the use of PRA and other studies in regulatory analysis, as we as clarified some of our next steps.

On slide 5 we dive right into the content of the paper. As was mentioned a couple of times during the opening remarks, this all started with SECY-12-0110, Consideration of Economic Consequences Within the NRC's Regulatory Framework. And in that the staff recommended enhancing Cost Benefit Guidance to harmonize across the Agency.

In that SECY paper from August of 2012 we

noted that for regulatory analyses, backfit analyses and NEPA cost benefit analyses across the NRC business lines and programs we use the same main guidance documents, which are NUREG/BR-0058, the Regulatory Analysis Guidelines, and NUREG/BR-0184, the Technical Handbook. So we recommended that we should look into those guidance documents, update them to better reflect and harmonize across business practices.

We received the Commission direction on this I believe March of last year, and this approved the staff's recommendation and directed the staff to among other things provide the Commission with a regulatory gap analysis prior to developing new guidance for application across business lines. And the Commission provided a few of the examples here in the parenthetical.

VICE CHAIR RAY: Because I've been asked this question, let me ask you, Alysia.

MS. BONE: Yes.

VICE CHAIR RAY: Let's say a -- in any form that you want, what do we mean by "gap analysis?"

MS. BONE: I appreciate the question. We go into that in a little bit with our methodology --

VICE CHAIR RAY: All right.

MS. BONE: -- and scope.

VICE CHAIR RAY: I can defer it until then.

MS. BONE: And maybe I can defer it until then and then we can get into a lot more detail.

VICE CHAIR RAY: All right.

MS. BONE: So as we also mentioned during the opening remarks, the staff provided a plan for updating cost benefit analysis in SECY-14-0002, which was provided in January of this year. And in this information SECY paper we described this two-phase process. The first phase as Aby mentioned was more editorial administrative changes, really nothing that rises to the level of major methodological changes. But in parallel to that, the staff performed this gap analysis which we're talking about today, which really kicks us off into Phase 2, which addresses any methodological changes, any potential policy issues regarding cost benefit analyses.

So the last bullet here, we just note that Phase 2 is of course informed by this gap analysis as well as the Commission direction following SECY-14-0087, Qualitative Consideration of Factors in the Development of Regulatory Analyses and Backfit Analyses.

Any question on the background?

(No audible response)

MS. BONE: So gap analysis scope. We have a couple of slides on scope and methodology. I think you've seen this table before. The blank table is just to illustrate kind of what our scope was. It is a multi-dimensional scope that we looked at cost benefit practices across the various purposes of cost benefit analyses in the NRC, regulatory analyses, backfit analyses and environmental analyses for NEPA, specifically SAM and SAMDA.

And then we looked across the business lines and programs: operating reactors, new reactors, materials, fuel cycle facilities, etcetera. Within each of these cells we wanted to look at the regulatory requirements that are required or lack thereof. So for instance regulatory analyses of course there are no regulatory requirements for this, but any associated federal agency guidance, what our internal guidances are and some of the assumptions or practices that are applicable for each of the cells. So this is just to give you an example that we were looking across the Agency out of many different facets here.

MR. MOHSENI: And so, Alysia, to answer Dr. Ray's question --

MS. BONE: Yes.

MR. MOHSENI: -- the spectrum of scope that is applied across the different lines, is the gap you're looking for -- is that what the regulatory gap analysis is about?

MS. BONE: Yes, we were looking -- exactly. So we were looking at what are the differences and similarities in how cost benefit analyses are conducted throughout all of these different applications. And so we were looking at -- because we were tasked to perform a regulatory gap analysis, we first looked at regulations, right? That was kind of the first look. And we wanted to know if there were gaps in the way -- I have an upcoming slide in just a second. But the way we were interpreting that was were there any constraints imposed on the staff by regulations that would prohibit us from performing a sufficient cost benefit analysis?

We also looked at differences. So that's where we kind of -- how we defined a gap. Now a difference, we recognized that there could be differences across business lines, across analyses, but in many cases these differences are warranted. They're very different intrinsic characteristics within these different analyses. And so just because

you have a difference doesn't mean there's a regulatory gap. Does that make sense?

So I know it's a little bit nuanced, but we thought it was important to make that point in the paper that differences do not always constitute a gap or a problem.

VICE CHAIR RAY: Yes, oftentimes people would think a gap is something that's missing.

MS. BONE: Right. Exactly.

VICE CHAIR RAY: That there is a difference.

MS. BONE: Exactly.

VICE CHAIR RAY: But I assume you would include, oh, we don't have any guidance here. Recognize that as a difference.

MS. BONE: Exactly.

VICE CHAIR RAY: Call that a gap.

MS. BONE: Yes.

VICE CHAIR RAY: And another way of thinking of gap would be a gap between methodologies that we use and those that are in common use elsewhere. Is that --

MS. BONE: We did. In fact we did.

VICE CHAIR RAY: -- included as well?

MS. BONE: And in that latter example that

you use posed of maybe what our guidance says and if that differs from the current state of knowledge, we call that an enhancement. And the reason we did that is because again our primary purpose was looking across the Agency. Maybe these are the same thing. Maybe we are consistent with our guidance and we're consistent across the board, but we just recognize we need better guidance, period. We need to enhance this. So that's why we called it an enhancement. Does that help?

VICE CHAIR RAY: Yes, sure.

MS. BONE: Okay.

VICE CHAIR RAY: Like I said, I was just asked how constrained the notion of gap --

MS. BONE: Sure.

VICE CHAIR RAY: -- was and what we based it on.

MEMBER SCHULTZ: Alysia, I heard you say two things.

MS. BONE: Yes.

MEMBER SCHULTZ: One was that you fill the matrix to identify what is done --

MS. BONE: Yes.

MEMBER SCHULTZ: -- within each of the -- call them business lines and in each of the

applications. And then you also indicated that you're going to talk about why it's done that way. And then you talked about regulatory constraints. Are there any regulatory constraints?

MS. BONE: Right.

MEMBER SCHULTZ: So that's the second question.

MS. BONE: Yes.

MEMBER SCHULTZ: And then I would presume that you would try to identify from that why question why might there be differences?

MS. BONE: Right.

MEMBER SCHULTZ: So all of that is a picture of what you set out to do?

MS. BONE: Right. Yes.

MEMBER SCHULTZ: Thank you.

MS. BONE: So on slide 7; I recognize this is a bit difficult to see, but this is an excerpt just to show you that this is how -- we took from the earlier slide that we just had the scope, and then we filled it out in various tables, which is from Enclosure 2.

Slide 8 talks a lot about some of the things that we were just discussing about our methodology. So to start with our analysis, or the

goals for our analysis. First and foremost, we're to identify the similarities and differences in cost benefit regulations guidance and practices across the Agency. That was what our initial tasking was to do. And then to the degree possible we did want to discuss the potential implications of these similarities and differences. So what this might mean for our path forward. But I do want to just point out that this is the first step. Identifying them was the first step as we move forward with our Phase 2.

For our tools, our analysis tools, we had used many different tools. We first started with a staff subject matter expert questionnaire, so the actual practitioners within the Agency who conduct these analyses. We created a questionnaire of what are some of the assumptions? What are some of the guidance documents that you use just to develop a sort of common baseline understanding? And this teed us up for a series of internal workshops that we focused on the various analyses.

So for instance, we had a regulatory analysis work shop. We had subject matter experts from each of the business lines walking through kind of their process for performing this analysis. In this way we were identifying some, like I mentioned,

similarities and where there were some differences either in terminology or larger differences in assumptions.

In parallel we also performed a literature review and a limited review of other federal and international agency practices. I'm sorry, that should be international rather than internal agency practices.

The last bullet is that the terminology gets kind of to the question that we were just going over. Gaps, we really wanted to kind of limit that term for the purposes of this analysis to the constraints imposed by regulations.

MEMBER SKILLMAN: Could you give an example of that, please?

MS. BONE: Sure. Well, and in fact that gets to our next slide, which is the results, that we didn't really find any. We looked at the cost benefit regulations that are applicable for these analyses, for the backfit requirements. So in Part 50, 70, 72, 76, the backfit requirements, and then the NEPA requirements in Part 51. And we didn't see that there were actually any constraints posed by the regulations that we could -- there was sufficient flexibility to update our guidance, to update our practices to better

harmonize without having to go through rulemaking. So that was really the purpose of defining this term here.

MEMBER SKILLMAN: Thank you.

VICE CHAIR RAY: It's not a definition you can come up with --

MEMBER SKILLMAN: Intuitively.

VICE CHAIR RAY: No, but that's what they've used here. I guess that's was the origin of the question I asked in the first place.

MEMBER SKILLMAN: Yes, I was just trying to think of an example of where our regulation would constitute constraint to doing benefit analysis.

MS. BONE: If there were regulations that impeded us from considering one of these attributes that we'll discuss later on, some of the enhancements, I guess that's what we would maybe constitute -- or if we were thinking just if there were a regulation that we would need to promulgate based on the fact that we saw differences in practices. I guess it gets to the fact that we did identify differences, but we can work to harmonize these differences without rulemaking, that we can use guidance documents, we can use practice improvements, that kind of a thing.

MEMBER SKILLMAN: Okay. Thank you.

MS. BONE: Yes.

MEMBER REMPE: So I've got to ask, back on page 7 --

MS. BONE: Sure.

MEMBER REMPE: -- when you look at the first column on the slide that had the regulatory requirements -- and I was a little puzzled why the regulatory requirements, especially those for severe accidents, are the same for materials facilities. And I was relieved when I went over to the far column to know we weren't doing anything for severe accidents and materials facilities in practice, but --

MS. BONE: Right.

MEMBER REMPE: -- is that what you meant to have in that first column? Are there regulatory requirements that are the same related to severe accidents for materials, or is that just a typo or something?

MS. BONE: I think when we say "same," we're just trying to note that the NEPA requirements in general are in --

MEMBER REMPE: Oh, okay.

MS. BONE: -- Part 51. Yes. Yes, but of course we don't perform SAMA or SAMDA for materials.

(Laughter)

MEMBER REMPE: Yes. Good.

MS. BONE: Okay.

MEMBER SKILLMAN: On that slide for fuel cycle facilities isn't there at least an analog to the accident analysis in the centrifuge plants? You have your IROFS, you've got fire, you've got just a number of issues. They don't have the enthalpy release to the public mass and energy issues that we have in the reactor plants, but they certainly have chemical issues.

MS. BONE: Yes.

MEMBER SKILLMAN: Hexafluoride release and potential criticality issues.

CHAIRMAN STETKAR: I'm not sure that the ISAs are required by regulation. I'm not sure that they are or they're not, but --

MEMBER BLEY: I should be sure.

CHAIRMAN STETKAR: You should be, but that's why I said I'm not sure. But the notation here regulatory requirements, which means rule, not --

MS. BONE: Right.

CHAIRMAN STETKAR: -- staff guidance, which is not a regulatory requirement.

MEMBER BLEY: I believe they are, but they don't have to be quantified.

CHAIRMAN STETKAR: You think that there is --

MEMBER BLEY: I'm pretty sure.

CHAIRMAN STETKAR: -- a rule that requires an ISA? If there is, then that's it.

MEMBER BLEY: I think so.

CHAIRMAN STETKAR: That's it.

MEMBER BLEY: I think so.

CHAIRMAN STETKAR: Because I don't know.

MEMBER BLEY: We'd have to look.

MEMBER SKILLMAN: That wasn't intended to be a challenge question. That was a curiosity question.

MS. BONE: Yes.

MEMBER SKILLMAN: Seems like at Hobbs I know that we treated those accidents. Now they're different than what we treated in the PWRs and BWRs, that they are taken just as seriously.

MS. BONE: Yes. Thank you for that question. We'll come back to you with an answer.

MEMBER SCHULTZ: Just staying on that slide.

MS. BONE: Yes.

MEMBER SCHULTZ: So what I'm seeing here in terms of the guidance for new reactors and

operating reactors, it is different. That is, we've got supplement 1 applied in one case. One in revision for the new reactors. Can one still conclude that the guidance is the same, or are there differences?

MS. BONE: There are some -- I should say similar. I guess I should say guidance documents are similar. We do have those main 005A and 0184 that are primarily kind of what we are honing in on.

MEMBER SCHULTZ: Okay.

MS. BONE: But for completeness I think we wanted to incorporate all of the guidance documents in this table.

MEMBER SCHULTZ: Thanks.

MS. BONE: Yes.

MR. MOHSENI: I think the question is do they rise to the same level of quality of guidance? Do we have evenness across operating reactors and new reactors, I mean, even though they were developed historically at different times and therefore you have a collection of historical documents out there which you have inventoried here? But at the end of the day they basically cover more or less the same areas, right? That's the --

MS. BONE: Go ahead.

MR. SCHOFER: They cover the same areas.

The primary difference between the two is, one, SAMDA's is the design alternatives versus SAMA. The additional 20 years is looking at a review of the environmental at that point without design alternatives.

MEMBER SCHULTZ: Yes.

MR. SCHOFER: But if anyone in the audience wants to further clarify that?

(No audible response)

MR. SCHOFER: No? Okay.

MS. BONE: Anymore questions?

(No audible response)

MS. BONE: I think we finished methodology. So key results. The first key result that we wanted to put up front is that we again reaffirm that the current cost benefit regulatory framework is found, which is a statement we also made in SECY-12-0110. And one of the feedbacks that we got from the ACRS Subcommittee was really clarify what we mean by that. What did we look at to have the basis for this conclusion?

So what we mean by that is that no NRC regulation impedes the staff from performing cost benefit analyses. What we looked at, as I mentioned before, were the various requirements associated with

cost benefit analyses. In NEPA cost benefit analyses requirements are in 10 CFR 51. The backfitting requirements are found in 10 CFR 50, 72, 76. And then we have analogous requirements for issue finality in Part 52. And of course there are no NRC regulations that require performing regulatory analyses.

We also determined that there is sufficient flexibility to allow for updating and harmonizing NRC Cost Benefit Guidance, which we note before primarily we're looking at the Regulatory Analysis Guidelines, which are more -- I guess maybe would be better called Cost Benefit Guidelines because they apply to all of these different applications and the Technical Handbook. We added some words in the draft SECY paper to kind of give better context and more framework for that statement, that conclusion.

Then the next key result is that even though we don't see that there's any rulemaking necessary, that there aren't any constraints proposed by the regulations, we did identify that there are differences in cost benefit practices within the NRC. And as I mentioned, we fully acknowledge that several times these differences are warranted based on the intrinsic differences in application or analyses, but that some differences may constitute work guidance

updates and practice updates for greater harmonization.

And I just want to take a second to define what I mean by harmonization here. And we added some words in the SECY paper to say this, too, that by no means do we mean harmonization is that every analysis for every application should be performed identically. Rather, the intent for that -- and as we're moving ahead with our guidance updates we want to incorporate best practices to produce an accurate and realist cost benefit analysis that also considers the nuances of the various applications without making the process and the analysis overly burdensome and cumbersome.

So we talked about that before, that we don't want to make this process so onerous that it's impeding the staff from performing -- wanting to perform at all. It's finding a fine balance between making your analysis as accurate as possible and still understandable and user friendly. So that's just a moment about what we mean by harmonization here.

MEMBER SCHULTZ: Are you defining differences when you say within the NRC from box to box new reactors versus operating reactors, for example --

MS. BONE: Yes.

MEMBER SCHULTZ: -- or are you also looking at differences within operating reactors or within new reactors?

MS. BONE: I would say --

MEMBER SCHULTZ: You know, project by project, per se.

MR. SCHOFER: We were focusing more between offices versus internal to an office. The groups that performed the analysis are small, so you can have less differences within an office.

MR. MOHSENI: There is another -- not only do you look at the variation across business lines, the offices, as mentioned, but also regulatory analysis cost benefit may be different from an environmental review cost benefit analysis. The two are different, and that's --

MEMBER SCHULTZ: Yes, along the different purposes --

(Simultaneous speaking)

MR. MOHSENI: Yes, the purposes. The backfit analysis may have a different methodology and purpose. All are intended to inform the policy makers about the impacts of their decision, but each one in the contour and the context of its own purpose. NEPA, for example, is much broader in context across the

agencies of the Federal Government. And there's much more guidance developed by other federal agencies elsewhere where one is compared with, whereas regulatory analysis is kind of unique to NRC. And it's not a requirement, but we developed it. And that disciplines us to actually understanding the impact for our policy makers as we go forward.

MS. BONE: We have a few examples of these differences that we identified, which I'll talk about in each slide moving forward.

The first is regarding a substantial safety enhancement screen. And this involves differences from NRC business lines and programs subject to the backfit requirement. As I mentioned, Parts 50, 70, 72 and 76. And each of those backfit requirements follow the general same format of determining whether or not the backfit is needed for -- first, if it falls under an exemption to performing the analysis. So if it's needed for adequate protection, compliance or redefining adequate protection. If it's not and then the staff then determines if the backfit would constitute a substantial increase in public health and safety, or common defense and security. And then if it's determined that yes it is, then the staff performs a

cost benefit analysis.

So this involves that second step I just talked about with determining if it's needed for substantial safety enhancement. And to perform that screen for power reactors the safety or regulatory actions analyses involve the use of the Safety Goal Policy. However, the safety goals do not apply to the other regulated activities, specifically those that also are subject to the backfit requirements.

So in our Cost Benefit Guidance, the NUREG/BR-0058, it's really very heavy on the Safety Goal Policy Statement, very heavily leaning towards the reactor safety regulatory actions. And so the staff is considering whether to update the Cost Benefit Guidance to more accurately reflect the current practices of all of these different business lines just to so that this safety screen does apply to the other backfit requirements, but the Safety Goal Policy usage is applicable to only the power reactor -- to the operating reactor power reactors.

MEMBER SCHULTZ: Alysia, not to draw you back too far, but you mentioned that you did look at other agencies --

MS. BONE: Yes.

MEMBER SCHULTZ: -- to see what other

agencies were doing. And then on the chart you had indicated that in the approach associated with the way NRC does the work that the external influence is all none and external guidance was marked none.

MS. BONE: Yes.

MEMBER SCHULTZ: So that means that at some point we have incorporated and developed our own guidance with reference to what is done in other agencies and we no longer do that. You'd think perhaps we might have developed our approaches understanding general concepts that are used by other agencies and perhaps provided some linkage to those so that as those methodologies improved we would know about it and we would consider changes in what we do. And I'm guessing that's not done.

MS. BONE: Well, I will say -- so not specific to this --

MEMBER SCHULTZ: Yes.

MS. BONE: -- difference here, right? Just kind of more globally? Is that --

(Simultaneous speaking)

MEMBER SCHULTZ: Yes, I wasn't --

MS. BONE: Okay.

MEMBER SCHULTZ: I had to back up and --

MS. BONE: Okay.

MEMBER SCHULTZ: -- focus into my understanding.

MR. SCHOFER: I think the key is that the reg analysis guidance conforms with OMB guidance that has been put forth that is required to be a -- and is enforced for other federal agencies.

MEMBER SCHULTZ: Yes.

MR. SCHOFER: It's only because we're an independent agency that we don't fall under that umbrella.

MEMBER SCHULTZ: Right.

MR. SCHOFER: However, we voluntarily conform our guidance with what is put forth for all other federal agencies and --

MEMBER SCHULTZ: And watching and reviewing and --

MR. SCHOFER: Correct.

MEMBER SCHULTZ: -- looking for changes and direction and so forth?

MR. SCHOFER: And when Executive Orders come out we also look at those. So as things evolve we're continuing to look to see what we need to do different.

MEMBER SCHULTZ: So there's a dotted line to external? I mean, there's an external dotted line

to the OMB --

MR. SCHOFER: Oh, yes, absolutely.

MEMBER SCHULTZ: -- related activities? Thank you.

MS. BONE: Any questions?

(No audible response)

MS. BONE: The next difference that we highlighted is the approach to time horizon. And this is a difference that the staff identified --

VICE CHAIR RAY: I do have a question.

MS. BONE: Oh, sure.

VICE CHAIR RAY: Took me awhile. Back up. When you say for power reactor safety regulatory actions analyses involve the use of a Safety Goal Policy, a substantial enhancement, is it cost-justified or not, one would think it's independent of the safety goal, but are you saying even if it is a substantial safety improvement that's cost beneficial, if the safety goal is being met, it's doesn't pass the backfit test? Is that what you mean by use of the Safety Goal Policy?

MS. BONE: No. I mean using the Safety Goal Policy to determine if the change would constitute a substantial safety enhancement.

VICE CHAIR RAY: Well, it's the change

that defines how much safety enhancement it's going to result in, right?

MS. BONE: Yes.

VICE CHAIR RAY: I'm just trying to figure out how the safety goal is used in that.

MS. BONE: Okay.

VICE CHAIR RAY: If the substantial safety enhancement is in a range in which you're not meeting the safety goal but it gets you closer to it, that's one thing. If you're meeting the safety goal and it just makes you more safe, that's another thing.

MR. SCHOFER: It's the latter. What is done is when we do the safety goal screen, we're looking to see what delta improvement in risk results.

VICE CHAIR RAY: Yes, right.

MR. SCHOFER: And our guidance says that if you have an increase in risk of one-tenth of the safety goal, we should continue to consider that. In some cases we evaluate the alternatives which are even less than that.

VICE CHAIR RAY: So it's used to determine a threshold?

MR. SCHOFER: That's right.

VICE CHAIR RAY: It's a threshold?

MR. SCHOFER: Yes. But if we're far

removed from that threshold, meaning that we're much safer and we don't see significant incremental safety improvements, that serves also as a limit to say we're safe enough.

VICE CHAIR RAY: Well, the last time we talked about I think how this would apply to a passive --

MR. SCHOFER: Yes.

VICE CHAIR RAY: -- plant, for example.

MR. SCHOFER: Sure.

VICE CHAIR RAY: And you talked about that, I think. And it just -- as you were going through this I started wondering if this was a point at which that issue is most obvious. So that if you're talking about apply backfitting to a passively safe plant, it's almost -- you come up with a different answer even though the safety benefit might be the same.

CHAIRMAN STETKAR: I mean, the example I always use is that if you have plant X where their baseline core damage frequency is; I'll pick a number, 8 times 10 to the minus 5, and they increase that baseline core damage frequency by 2 times 10 to the minus 5, or 2.1 times 10 to the minus 5, that would probably trigger the fact that that -- I'm sorry.

Well, you do it in the reverse.

MR. SCHOFER: That's a very good example. You would continue to evaluate that.

CHAIRMAN STETKAR: You continue to evaluate. On the other hand, if my baseline core damage frequency was 10 to the minus 7 and I increased it by a factor of 500 to 5 times 10 to the minus 5, that still wouldn't trigger further evaluation despite the fact that I would consider a factor of 500 a substantial change in risk.

VICE CHAIR RAY: Yes, and --

(Simultaneous speaking)

CHAIRMAN STETKAR: And I'm doing it the wrong way, because you would look at --

MR. SCHOFER: In that case we're not looking --

CHAIRMAN STETKAR: -- reductions at least.

MR. SCHOFER: -- to make plants less safe. So if the example --

CHAIRMAN STETKAR: No, it's --

MEMBER SCHULTZ: -- that you just provided was the change would result in a 500 times increase --

CHAIRMAN STETKAR: Increase --

MR. SCHOFER: -- in risk --

CHAIRMAN STETKAR: Yes.

MR. SCHOFER: -- the that would be a problem.

CHAIRMAN STETKAR: That's right. And it's the inverse relationship.

VICE CHAIR RAY: All right. Well, I guess I got to ponder it. I was just comparing it to -- that the only place that we use it is in power reactor safety --

CHAIRMAN STETKAR: Well --

VICE CHAIR RAY: -- and does it cause a substantial increase in safety to meet the threshold for a conventional plant but not meet the threshold --

(Simultaneous speaking)

CHAIRMAN STETKAR: And, well, in mine I guess I wasn't thinking straight. I'll use the inverse. If it was my core frequency is 1.1 times 10 to the minus 4 and I get a 20 percent reduction, that could be considered substantial increase because it will drop me --

MR. SCHOFER: Yes.

CHAIRMAN STETKAR: -- below. Whereas if my core damage frequency was 5 times 10 to the minus 6, I could get a 200 percent or a 10,000 percent reduction and that still wouldn't trigger this because my absolute is low enough --

MR. SCHOFER: Yes.

CHAIRMAN STETKAR: -- despite the fact that a 2,000 percent reduction in my mind is substantial.

MR. SCHOFER: Unless it was little money to achieve that improvement.

CHAIRMAN STETKAR: Yes, but you don't get to answer that part of the question. You'll never the answer to that part of the question.

VICE CHAIR RAY: Yes, that's really what I was aiming at was do we wind up --

CHAIRMAN STETKAR: You never get to answer that part of the question, right?

MR. SCHOFER: We do. I mean when we do the screen, we're looking at that, but for the most part if you're that low it would probably screen out.

MR. SCHOFER: So the filtration, you do some screening up front just to be sure that you're not missing a big item in there that would influence the equation. But you're right, the logic, that's why it's important to have this reference point that the safety goal is here and where are you relative to that? Not all increases in substantial safety benefit is equal, because if you're way, way down there in

terms of risk, increasing it by maybe an order of magnitude versus being closer to the safety goal, they carry to different ways.

CHAIRMAN STETKAR: And that's why I think the notion of substantial change is not very transparent, because most folks who don't deal with this would consider a few hundred percent reduction as substantial.

VICE CHAIR RAY: But I don't need to do it if I'm --

(Simultaneous speaking)

CHAIRMAN STETKAR: But I don't need to do it because I'm low enough to begin with.

VICE CHAIR RAY: Correct. Correct.

CHAIRMAN STETKAR: I'm safe enough.

MR. MOHSENI: We just saw that application in containment protection and release reduction. We showed where the QHOs were and how far in the worse case scenario you were.

CHAIRMAN STETKAR: Yes. Yes.

MR. MOHSENI: And so, that would be --

MR. SCHOFER: And in that we did look at cost.

MR. MOHSENI: Yes, we did because clearly the attention and the -- you had --

(Simultaneous speaking)

CHAIRMAN STETKAR: Well, but -- yes.

MR. MOHSENI: Yes.

CHAIRMAN STETKAR: But in terms of going forward one -- my own opinion, one ought not to have that sort of, well, but because of the attention on this one and it was important we did something a little bit different.

MR. MOHSENI: Correct.

CHAIRMAN STETKAR: One ought not to have to invoke that sort of notion that we --

MR. MOHSENI: Ideally --

CHAIRMAN STETKAR: -- address other things where we think that perhaps we're going to get questioned about it, but don't where we think we are not going to get questioned.

MR. MOHSENI: Correct. Yes, that's it. Ideally, if we had full discipline and everyone agreed, okay, this methodology will answer yes or no tot go forward, we would be in a different place. But reality is that we aren't. As you can --

VICE CHAIR RAY: Okay, Alysia. Thank you.

MS. BONE: The next difference highlighted was the staff identified a difference among business lines in the approach to analysis time frame of

regulatory analysis. So how far your analysis goes out. We note -- and this gets to your earlier question about how we looked at other agencies. And we note that the Office of Management and Budget OMB Circular A-4 does state that the time frame should cover a period long enough to encompass all the important benefits and costs.

The approach is a little bit different between power reactors and material licensees. For nuclear power plants the analysts assumed one license renewal term and takes the average of the remaining life of the class of plants, but for materials licensees the analysts evaluates based on the license term. We note that it may be a bit more difficult for the materials licensees to determine the time horizon. So there is a difference here, but it might be justified based on the difference in application. And we would just want to make sure as we're moving forward with our guidance that we address this and harmonize it moving forward.

MEMBER SKILLMAN: How will subsequent life renewal be considered as we're moving ahead here, you know, 60 plus 20 SLR?

MR. SCHOFER: I guess we'll know when the Commission --

(Laughter)

CHAIRMAN STETKAR: You're obviously going to have to take that into account.

MR. SCHOFER: Oh, obviously. I mean, we always take into account the term of the license. So if the term of the license changes for whatever reason, longer or shorter, we take that into consideration.

MEMBER SKILLMAN: I'm just thinking there are plants that are coming up on the end of their first 20-year license renewal and there's chatter that some of those might come forward for another one. So when you say it takes the average of the remaining life of the class of plants, that is going to become a fairly variable term in the numerator or the denominator --

MR. SCHOFER: Yes.

MEMBER SKILLMAN: -- however you figure this number.

MR. SCHOFER: And we do track that. That's a continual calculation depending upon announcements.

MEMBER SKILLMAN: Thank you.

MS. BONE: The third different that we highlight is the use of sensitivity analyses. And

this difference is applicable for regulatory analyses or across business lines. And we noted that the sensitivity analyses can examine the extent to which the uncertainty of each element affects the cost to achieve the regulatory objective being examined, but that they're not performed as consistently across the board as they probably should be for the NRC to conduct a benefit from a harmonized approach in the use of sensitivity analyses across business lines.

The last difference that we highlighted was quantification of benefits. This was one that we identified across business lines regarding the extent to which we quantify benefits and costs, but in this case we just are talking about benefits within regulatory analyses. This of course is related to a previous SECY paper for which we briefed you on of the qualitative consideration of factors in the development of regulatory analyses and backfit analyses.

And we note that modeling tools and techniques for quantifying benefits used for power reactor safety regulations are typically not available for other business lines and programs. So the extent to which benefits are qualitatively discussed for other business lines can be more extensive than for

power reactors at time. We are awaiting the Commission direction on this and we'll incorporate the Commission direction on this moving forward in the guidance updates, but we did want to capture it for completeness within this gap analysis as well.

So those are just some of the high-level examples of differences that we noted. Of course we have an enclosure, Enclosure 2. That provides these as well as a few other more minor I think terminology differences that we know, as well as that completed table that we discussed before.

Moving on we have that --

MEMBER SCHULTZ: So just a moment.

MS. BONE: Oh, sure.

MEMBER SCHULTZ: Flipping through some comments here. On time horizon you're looking at the differences. In other words, the material licensees the analyst evaluates based on license term. Well, many of those licensees can be renewed.

MS. BONE: Yes.

MEMBER SCHULTZ: And we have a particular formulation that we've used for the plant.

MS. BONE: Yes.

MEMBER SCHULTZ: Was the why question asked here to identify what caused that process to be

put in place for the material licensees and not take into account the fact that the licenses might be renewed?

MS. BONE: We -- oh, did you --

MR. SCHOFER: Yes, for material licensees we're talking in the order of thousands to ten thousands of licensees. Everything from a medical lab who has a source to a fuel fabrication facility. So there's quite a bit of difference. And in terms of --

MEMBER SCHULTZ: And we're not talking about general -- we're talking about generic or general --

MR. SCHOFER: Exactly.

MEMBER SCHULTZ: -- types of evaluations and analyses here.

MR. SCHOFER: Exactly.

MEMBER SCHULTZ: We're not talking about a licensee-specific evaluation for a particular application.

MR. SCHOFER: Yes.

MEMBER SCHULTZ: Okay. Thank you.

VICE CHAIR RAY: On that last point, I mean, why did you --

(Simultaneous speaking)

MR. SCHOFER: But in terms we have to look

at the term of that group of licensees. So typically it's like 1, 3, 5, 10, maybe 15 years, and we do the analysis within that time period to calculate the effects.

MS. BONE: Moving on to our next category of items that we identified, this falls into the enhancements category. So these aren't necessarily differences across business line or analyses, but these are just enhancements that the staff identified that may be considered as we update our guidance and practice. We have several examples here that we'll move through, but again these don't really represent the inconsistencies across the analyses. There's ways that we can improve our guidance.

In general in this section of the SECY we talk about some general conclusions that we recognize the need to generally improve the accuracy of our Agency's quantitative estimates. This is feedback that we've received during various -- from stakeholders. We do recognize that up front. And then we have these more specific enhancements that we identify in the paper.

The first is treatment of uncertainty. As was mentioned in opening remarks, this is one that we've received from ACRS in the past that we need to

enhance the way we treat and consider uncertainty in our regulatory analyses. Discussion of uncertainty is often not included in NRC regulatory analyses, however, it is an estimating best practice which is acknowledged and addressed in many guidance and references. We found the importance of uncertainty and it's informing the decision making process holistically.

And we do note again that there is Government-wide guidance on this. OMB requires a formal quantitative analysis of uncertainties or rules with annual economic effects of $1 billion or more. So this is just to acknowledge that the importance of uncertainty is well-known out the Federal Government.

CHAIRMAN STETKAR: Alysia, why in the revised paper did you in my mind substantially soften the discussion of this? And I'm obviously sensitive to it, but if I read the draft we had for the Subcommittee meeting, the first sentence says, "A discussion of the uncertainty and benefit in cost estimates is a critical part that is missing in most if not all NRC regulatory analyses." And the revised version says, "Some NRC regulatory analyses do not contain an analysis of uncertainties. NRC regulatory analyses may benefit from additional discussion about

uncertainty inherent in some benefit cost estimates."

That to me is -- and the rest of it is essentially the same.

MS. BONE: Yes.

CHAIRMAN STETKAR: But as introductory remarks on this, that to me sounds a lot different. And maybe I'm too sensitive to it, but it sounds like going from something that says not many people do this and it's important to, well, some people don't do it and you might benefit from doing it.

MS. BONE: I'm trying to remember all of the discussion we had as we were developing the paper, and the word "soften" -- I don't think that ever was our intent was to soften it, but --

CHAIRMAN STETKAR: It certainly is -- As I read it, and I just quoted from the two versions --

MS. BONE: Yes. Yes.

CHAIRMAN STETKAR: -- and to me they sound different.

MS. BONE: Yes.

CHAIRMAN STETKAR: Given the fact that essentially the rest of the words in these two -- there's only two paragraphs -- they're not precisely the same, but the rest of the discussion is for all practical purposes the same. They're examples, for

example.

MS. BONE: Yes.

CHAIRMAN STETKAR: And they make the point that there is guidance for how to do this. Take that into --

MS. BONE: Okay.

CHAIRMAN STETKAR: It just struck me.

MS. BONE: Okay.

MEMBER SCHULTZ: I wanted to comment also that earlier on your slide talked about the differences related to sensitivity analysis and indicated that there was not a consistent application of sensitivity analysis. I think that's a nice way of saying it.

(Laughter)

MEMBER SCHULTZ: My impression was that lots of folks do not do sensitivity analysis at all. And it was tied to a way in which to evaluate uncertainty, and yet under treatment of uncertainties we're not offering that as both evidence that treatment of uncertainty is not consistent or as a way in which to perhaps even promote a graded approach to treatment of uncertainty versus a more formal application.

And I would say kind of in concert with

John that if -- not to pick the words apart, but when you say a discussion of uncertainty has not always been included in the NRC regulatory analyses, I could interpret that as saying, well, way back when we didn't do it, but --

MS. BONE: Yes.

MEMBER SCHULTZ: -- we really began to come together here. And I just don't think that's what you intend by the point.

MS. BONE: Right.

MEMBER SCHULTZ: I think you have to be clearer to say it's just not happening. It ought to happen. There are different ways to do it. I would not say several. I think you could limit it to a sensitivity analysis and describe that. You could talk about more formal uncertainty analysis and perhaps something in between. But it doesn't seem right --

MS. BONE: Right.

MEMBER SCHULTZ: -- not to examine the uncertainties when you're trying to make a decision. But I think of all that we've talked about wanting to come out of this, I would say that would be a fundamental area of focus.

MS. BONE: Thank you.

MR. SCHOFER: We agree with that.

MEMBER POWERS: Do sensitivity analyses really help?

MEMBER SCHULTZ: I think they do. I think when you're trying to make a decision, if you're performing an analysis and you don't look at the uncertainties associated with the parameters --

MEMBER POWERS: That's not what I asked. I asked about the sensitivity analysis. It seems to me --

(Simultaneous speaking)

MEMBER SCHULTZ: No, I see what you're saying.

MEMBER POWERS: -- I can abuse sensitivity analyses.

MR. SCHOFER: I think the key use of sensitivity is to understand the drivers that could cause a significant change in the answer, but that doesn't preclude you from then doing something more in uncertainty space to address the central tendencies of the results.

MEMBER POWERS: It seems to me that they're subject to a substantial abuse --

MR. SCHOFER: I agree with that. Oh, yes.

MEMBER POWERS: -- that I can take

something that's uncertain by an order of magnitude and adjust it by 50 percent and say, gee, there's not much of an effect and say it's not very sensitive and say I don't have big uncertainties here.

On the flip side I have actually seen someone looking at computer codes and doing sensitivity analysis, and he was interested in the sensitivity of the surface to volume ratio. And so he varied that, even to lower values than what a sphere has, and found indeed the code was fairly sensitive to that, once you got below the value for a sphere.

(Laughter)

MEMBER POWERS: And so, he was using that as the basis for wanting to rewrite this computer code.

CHAIRMAN STETKAR: I've seen people do it with human reliability analysis where the estimated human error probability would be on the order of like five.

MEMBER POWERS: Yes.

(Laughter)

CHAIRMAN STETKAR: Every time you tried something --

(Simultaneous speaking)

CHAIRMAN STETKAR: -- you fail five times.

(Laughter)

(Simultaneous speaking)

CHAIRMAN STETKAR: Honestly. I mean, that's the type of thing that --

(Simultaneous speaking)

MEMBER POWERS: Yes, and it seems to me that if I was -- I mean, I don't disagree with your point.

MEMBER SCHULTZ: I agree. I think that option is certainly --

MEMBER POWERS: But if I was going to say there are -- I'm sure there are occasions when sensitivity analyses aren't totally appropriate, but I would certainly put in the admonition that they're also subject to substantial abuse. And similarly, when you do the quantitative uncertainty analysis -- I've been reading a lot of them lately -- that I also know how to manipulate and get the results I want out of those. And it's the parameters you pick and their ranges.

MR. SCHOFER: Sure, and the distributions. I mean --

MEMBER POWERS: The distributions, by entropy, you don't really care. I mean, since they're uncertain, you don't give a damn. I mean, you don't

know what the distribution is because the parameters are uncertain. But the ranges are the ones that I find people will be less effusive in describing how they got that range, and yet I can make the outcome -- by just adjusting those ranges I can get any outcome I want to out of --

(Simultaneous speaking)

MR. SCHOFER: Certainly.

CHAIRMAN STETKAR: At least oral feedback you hear a little bit of what we're saying, I think.

MS. BONE: Yes. Anything else on uncertainty?

(No audible response)

MS. BONE: Slide 16. This is a new heading, but it encompasses a couple of the examples we've had in the previous draft of the paper. So we got the feedback that we needed to kind of have a more holistic view of how we use PRA and other studies in regulatory analyses. And we thought that was really good feedback.

And so we restructured a bit the paper to give more of an introductory statement that PRA and other related severe accident studies may improve the fidelity of regulatory analyses. We acknowledge that resource limitations may necessitate the use of

limited scope or historical PRA studies. And if the analysts were to use a legacy study, then it is very important to be cognizant of the underlying assumptions noting that past PRA studies referenced in regulatory analysis guidance for NPPs are typically partial-scope PRAs.

So this gives kind of more of the context, sort of a high-level view of the discussion. And then we provide two specific examples of the analysis choice, including time truncation and distance truncation, which remain for the last version of the paper as well.

MEMBER POWERS: Those are excellent points.

MS. BONE: Pardon?

MEMBER POWERS: Those were excellent points to make on the historical uses of PRA, because for instance using the IPEs and IPEEEs a heck of a lot of steam has gone through the turbines since those were done.

(Laughter)

MS. BONE: Yes. The first example that we note under this discussion of PRA and other studies is the time truncation assumption. The staff identified that there is a difference among the modeling

assumptions for severe reactor accident analysis, that our guidance does not currently specify a truncation time and that the state of practice has varied over the years. So for instance, in NUREG-1150 24 hours was used. And then the state of the art reactor consequences analysis, SOARCA, 48 hours was used. So we acknowledge that there is a difference here, but we do not have a specific specified truncation time.

MEMBER POWERS: And in fact they're now doing them at hundreds of hours. I mean, 72 hours would just get you part way through Fukushima 3.

MS. BONE: The second example we note is distance truncation, that the NRC regulatory analyses have historically considered health and economic consequences within 50 miles of a plant site. I meant to change that. This should not say "facility." It should say "plant site" here. This is clearly guidance-specific to reactors. It's not for materials facilities.

This is consistent with the NUREG/BR-058, our Regulatory Analysis Guidance. We note that OMB Circular A-4 in regards to distances notes that analysis should focus on benefits and costs that accrue to citizens and residents of the United States. OMB Circular A-4 is pretty high-level and this is

their guidance on --

MEMBER POWERS: I would also bring to your attention the recommendation from the Health Physics Society that you not attempt to quantify consequences at doses less than one rem.

Did I quote that correctly, sir?

MEMBER RYAN: Yes, sir. Well done.

MEMBER POWERS: The trouble is when you go beyond 50 miles --

MS. BONE: Yes.

MEMBER POWERS: -- you're putting one millirem on a billion people. Yes. So I mean, I would --

MS. BONE: Right.

MEMBER POWERS: -- balance this. And before I did too much about that 50-mile limit, I would make sure I understood its history really well, because you have the potential of stepping on people's toes outside of the Agency.

MS. BONE: Yes, absolutely.

MEMBER RYAN: Yes, just one example is people sometimes have a tendency to us direct radiation ratings like millirem per hour or something like that and then they use some kind of a blend conversion factor to turn that into radioactivity

content and you can immediately see that that conversion could be at great risk of being way off. So I think that's Dana's point and that's a little bit more -- how you can get into trouble, people using the wrong kind of measurement to assess risk when in fact all they can assess is either dose rate from whatever is there, due a little sampling and figure out a little bit about what's there and go from there. So that's just a little extra. Thank you.

MEMBER POWERS: And I think that helps you having this Health Physics Society position paper, because if you make decisions in this area you can blame it on them and you don't have to defend it.

(Laughter)

MEMBER POWERS: I'm dead serious. This is a highly controversial area, and so if you can blame it on the Health Physics Society and say I'm just following the guidance from this learned society rather than having to defend it yourself, I think you're miles ahead. I mean, if you happen to be a specialist in that area, then I think you can probably mount a defense. But if you're not a specialist, then I wouldn't try to -- I'd blame it -- go talk to the Health Physics Society. I'm just doing what the learned society told me to do.

MEMBER RYAN: Dana, we'll count on you setting the rates, okay, when we get started?

MEMBER POWERS: Yes. Well, I mean, it is a thorny and difficult area, and to the extent that I can blame somebody else, I sure as hell would.

MEMBER RYAN: I mean, the bottom line, it's a very complex mix of variables, as you all know, per millicurie, microcurie, sievert, whatever you want. The number of radiation units with the amount of activity doesn't really correlate in any really useful way, so you have to kind of make that work for you as you figure out the circumstances you're in.

MEMBER POWERS: And you can already see what a quagmire this is. So to the extent that you can shift the blame --

CHAIRMAN STETKAR: And the fact of the matter is somebody has to address it sometime and this is the only arena -- this is the most visible arena where those kind of considerations actually come into play.

MS. BONE: Right.

CHAIRMAN STETKAR: You can argue that, well, this would be -- others within the Agency rather than you folks, but the fact of the matter is it's on -- on sort of a day-to-day regulatory basis you're the

folks who actually use those metrics to make decisions, or to at least make recommendations.

MEMBER RYAN: Just one last point. That's why you'll often see people trying to very quickly get to dose or dose equivalent, because that way if they can sort of lump it all together or parse it out in manageable enough pieces, they can get estimates of dose or risk to people more quickly than if they spend a lot of time picking the last picocurie off the forest floor. So just a little something to think about. That's what Fukushima has been wrestling with because they've got these really nice pine trees that are sucking up cesium like nobody's business and they want to use it for decorative wood instead of firewood.

(Laughter)

MEMBER RYAN: Firewood would be a whole new problem. And then the wild boar running around and cleaning the forest floor off, so they've got an uptake issue there. That's just two of the small ones they're dealing with. So, anyway.

VICE CHAIR RAY: What is meant by the last bullet? Have you gotten to that? I mean, I can read it.

MS. BONE: Yes.

VICE CHAIR RAY: I understand what it says. But does it mean in terms of what you intend to do?

MS. BONE: So we do acknowledge the great complexity of this issue and we -- the bullet is just meant to kind of tee us up for some of the conversations that we're having, that analysis of off-site consequences of beyond-design-basis events have shown that consequences of severe accidents involving very large releases could extend beyond 50 miles under certain conditions. And so, we recognize that in many cases 50 miles encompasses -- would accurately reflect what we need for the analysis, but that other severe accidents under specific situations show that maybe should -- have extended beyond 50 miles, or should extend beyond 50 miles the consideration.

And so, it's just really to add the note that we realize it's complex, but we are now because of the various nuances of this issue considering if the 50-mile limit should be reaffirmed or modified, or the 50-mile guidance should be reaffirmed or modified. So it's really just identifying the issue.

VICE CHAIR RAY: Okay. Fair enough. What would you expect to happen as a result of this observation going forward? You haven't gotten to the

plan yet, but this is an open item that's to be resolved. Is it? Or how should we look at this?

MR. MOHSENI: We should probably have thought about it enough that when it comes up, whichever position the staff takes, one has a rationale for the position you take given the calculations and the tools that would one way or the other show whatever you do you might always have a mechanism of calculating beyond what you have calculated in terms of impact.

VICE CHAIR RAY: Okay. But would you expect, Aby, for this to be in the guidance, what you just said, or something like that?

MR. MOHSENI: Perhaps wherever they end up, the staff ends up agreeing on, perhaps a rationale has to be understood of why we're at that point. It's not just that. It's also not just distance, but it's also the timing truncation. Wherever we truncate we probably have to have a rationale for why it's good science at this stage for adequate information. This is adequate for the kind of information you want for the regulatory policy making decision. It's not an act of assessing exactly everything you need to know about risk, but where is it enough to truncate to be able to adequately inform policy makers.

VICE CHAIR RAY: All right. I'm going to understand what you're telling me is this is an open item to be addressed in the guidance update, the Phase 2 work. It's not just an observation that ends here.

MR. SCHOFER: Everything was identified, what we tracked and eventually dispositioned in some fashion. This particular one is tied to the same issue we just talked about with regard to radiation dose. And a lot of this goes back to the Safety Goal Policy because these same issues were addressed in that policy, in the NUREG-0880, I think?

VICE CHAIR RAY: That's right.

MR. SCHOFER: Safety Goal Policy is the title. These same issues were there and decisions were made.

VICE CHAIR RAY: Yes, I know, that's why I'm wondering are we meaning to revisit that now as a result of this gap analysis?

MR. MOHSENI: Well, disposition is. It means basically either you confirm is there anything that causes us to take another position? But I doubt that we're not. But now that we're looking at so-called variation of across business lines, we don't have a choice but to address -- explain the differences adequately that we can actually continue

with some credibility because now it's on the table.

VICE CHAIR RAY: Okay. Well like I say, I'm going to believe that it's, as you said, on the table and to be dispositioned.

MEMBER SCHULTZ: So this is a statement. I just want to reinforce what Dana has said about the Health Physics Society position paper. You've already referenced that there's a historical basis, but the Health Physics Society position paper wasn't available to support those. Now it is. I think it's very important to put that on the top of the reference list to study carefully before any further action is taken. If you go in a different direction based on where there is not a common worldwide philosophy here, you will always be wrong.

(Laughter).

MEMBER SCHULTZ: You couldn't defend either side based on which side is trying to come up with the policy, but this is one way the Health Physics Society has found to address it and it could be depended upon to address this issue.

MR. MOHSENI: Appreciate the point.

MS. BONE: Slides 19 through 21 for the next three or so examples of enhancements we have kind of fall under the category of something called

Attribute 18, could be in Attribute 18 and from our NUREG/BR-058. And attribute 18 is defined as that any particular regulatory analysis can identify attributes unique to itself and that this attributes be appropriately described and factored into the analysis. So essentially a catch-all that would incorporate specific attributes that would be appropriate for the analysis.

Distribute impacts and equity is one that we do not currently consider. The Executive Order 2866 does note that when an agency determines that a regulation is the best available method of achieving the regulatory objective, it shall design its regulations in the most cost-effective manner to achieve the regulatory objective. In doing so each agency shall consider incentives for innovation, consistency, predictability, the cost of enforcement and compliance, flexibility and distributive impacts and equity.

We do not that as an independent regulatory agency the NRC is not required to comply with this Executive Order. I know there is no statutory requirement to consider distributive impacts or equity, but the OMB Circular -- OMB guidance states that this term is referred to the description of the

net effects of an action, regulatory action across the population and economy divided up in various ways, whether it be for income groups, race, sex, industrial sector, etcetera.

So this is something that's on the table that we're considering moving forward with. It's not in our guidance. We haven't considered it in the past. We do consider environmental justice concerns, and so there could be some overlap in that respect, and we would need to -- if we move forward with any work with this, we would need to obviously define our terms very concretely moving forward.

Other federal agencies including the EPA have incorporated such considerations in their guidance, so we just note that that is something that we discovered in our literature review of other federal agencies.

MEMBER SCHULTZ: In addition to environmental justice?

MS. BONE: I believe so as a separate -- another example of what could fall under this Attribute 18 is offsite properties with iconic value. We currently have no NRC guidance on this topic. An example of this would be impacts of the action on offsite properties with iconic value or unique value

to a particular community or group. And really one of the main drivers for putting this in, we got this comment several times at various public meetings from a member of a Native American tribal concern that raised this. So this is something that we've tracked throughout the process since SECY-12-0110, in our public meetings, and we've captured it here in the paper.

MR. MOHSENI: It should be noted that in the area of uranium mining, milling there is always this National Preservation Act that kicks in in Wyoming areas where in fact this is done under NEPA and not necessarily under a regulatory analysis. So duplication and all that stuff will certainly cost more, be more burdensome. And again, I go back to the earlier comment: It's just recognizing that these things have a place somewhere and someone is doing them. It doesn't mean everyone has to do them repeatedly in a particular -- so we'll find a way to disposition those as well.

MR. SCHOFER: And to be fair, this may be a derivative-type issue, a second derivative issue in that when we site facilities we're siting them away from infrastructure, typically rural areas. And so, by doing such you're not going to have historical

monuments or items close by because that is part of the siting review.

MEMBER SCHULTZ: Including materials facilities?

MEMBER RYAN: I mean, that's one of those arguments, too, that can kind of go all over the map on whether you've got -- just take the material. You could have this disequilibria or equilibria anywhere up and down the uranium chain. So first of all, what you've got radiologically, not necessarily atom-by-atom and curie-by-curie are becquerel-becquerel, whatever you like, it's going to be a new ball game every time you get into a site. So the uranium mill tailing sites, the FUSRAP sites look dramatically different in terms of risk and in terms of content. So it looks easy when you walk up to a place and say dig this up and take it to the waste site. It's really not as easy as you might thing.

So all those things come into play in a way that's I think -- I don't want to say impossible. Nothing's impossible, but it's very hard to assess the risks without some very intrusive and investigative work to figure out what you've got, how much physical, chemical, geohydrologic regime at the ground, below the ground and above the ground. You did all that

just to begin to understand that mini-ecosystem of radiological material, what's going to happen to it over time. I hope that's helpful.

MS. BONE: Thank you. The last enhancement that we note in the paper is the impact on critical infrastructures, which the DHS defines as the asset systems and networks, whether physical or virtual so vital to the U.S. that their incapacitation or destruction would have a debilitating effect on the security, national economy's security, national public health and/or safety, or a combination thereof.

We currently do not consider impacts on critical infrastructures within our cost benefit analyses. And if we did, if these were considered impacts to critical infrastructures, it could affect the outcome of a cost benefit analysis.

CHAIRMAN STETKAR: Alysia?

MS. BONE: Yes?

CHAIRMAN STETKAR: And this in principle could creep into something like -- a reactor accident anywhere in the U.S. could cause a 1,000-point drop in the Dow Jones industrial average that could persist for three or four years? Is that considered part of our critical infrastructure?

MR. SCHOFER: It has not.

CHAIRMAN STETKAR: Since it says the asset systems and that -- assets being physical assets?

MR. SCHOFER: We're thinking more about radiologically contaminated versus --

CHAIRMAN STETKAR: Okay.

MS. BONE: Right.

MEMBER RICCARDELLA: Sometimes at Indian Point it could cause that.

CHAIRMAN STETKAR: Well, no, it's -- but I -- debilitating effect on security, national economic security. Is a 1,000-point drop in the Dow Jones industrial average that persists for two or three years --

MEMBER POWERS: Less than 10 percent, it's not significant for --

(Laughter)

MEMBER SCHULTZ: No, but I'm serious.

MS. BONE: It's a great question.

CHAIRMAN STETKAR: Is that --

MS. BONE: Well, and I should say -- pardon me. I should say we've identified these things; and it's probably trite to say, but none of these are very clear-cut answers.

CHAIRMAN STETKAR: Okay.

MS. BONE: These are ongoing conversations

of if the -- in all of these enhancements. Should they be considered? If they should, what's the extent? We're talking about internally where to draw that line. And we recognize that.

CHAIRMAN STETKAR: And I don't know. I mean, you cite the --

MS. BONE: Yes.

CHAIRMAN STETKAR: I get the roads and the bridges and all of that kind of stuff.

MS. BONE: Yes.

CHAIRMAN STETKAR: But I don't know where --

MS. BONE: Where that would fall.

CHAIRMAN STETKAR: -- other folks -- you cite DHS.

MR. SCHOFER: And it may be different type of economically -- models would need to be used, input/output models versus --

MEMBER RYAN: One set of models you could probably look at least and get some understanding of how others have done it is to look at the low-level waste sites that have been permitted in the United States. Some are still active; some are closed. But I would look at kind of three aspects of it. What was required when they got started in terms of

infrastructure, monitoring, all those kind of things, financial assurance? And then look at them in basically three phases of their life: at the start, somewhere in the middle where they were half full, and at closure. And then post-closure. You need to add that on in there, too, because that's an important place where the money ends up.

So if you can get a handle on those bits just on regular old everyday solid low-level waste, you could then at least have a start. And you're going to get into semi-solid resins, other stuff. Stainless steel, it's okay maybe. And iron steel is not. It's going to rust pretty quick.

So and then of course the ultimate goal of that detail is to get some strategy of fractional release from the inventory as a function of time. That is the ultimate goal for these investigations. Fractional release from the inventory as a function of time. What radionuclide comes out when and at what rate?

So I think if you can get some insights into at least a few of the key radionuclides, pick the ones you like: strontium, cesium, tritium, something else. You can kind of get a handle of this is a good site really that's retaining most of the radioactive

material in a way that's predictable, or this isn't such a good site because it's popping out of the ground everywhere. We had no idea it was coming out that way. So that's kind of the playing field as I see it.

MS. BONE: Yes, that's very helpful. Thank you.

MEMBER RYAN: Anytime I can help, you know I'll --

MEMBER SCHULTZ: Alysia, I'm sure I missed it, but you had -- this was one of the list of those elements that were identified by the staff as items that would warrant perhaps further consideration. That list came from the way that the policy or the approach is written within OMB or some other -- or just general practices that you might have found in literature?

MS. BONE: All of the above. As we walked through our analysis --

MEMBER SCHULTZ: Is it all of the above? I really wanted to go back to OMB, because we talked about that being --

MS. BONE: Right.

MEMBER SCHULTZ: -- an element of national guidance, if you want -- whatever you want to call it.

MS. BONE: Yes, exactly. OMB was a big --

MEMBER SCHULTZ: And so this would be in there? Impact on critical infrastructure.

MR. SCHOFER: It was either OMB or one of the Executive Orders.

MEMBER SCHULTZ: Okay. Thank you.

MEMBER SKILLMAN: It just seems counterintuitive to your second bullet if these are not considered in cost benefit analysis. It just doesn't square with what we're trying to do here. If the impact to a critical infrastructure device is so great, it seems that the whole drill screens out. We wouldn't do anything that could truly injure a critical infrastructure component, nor would we find it cost-beneficial to destroy that device. So it seems as though it ought to be screened in, but it ought to have treatment that respects the importance of the device, whether it's a bridge or a tunnel or an airport, or whatever that might be. So it just seems peculiar that we would say the NRC doesn't consider it.

VICE CHAIR RAY: Well, of course that's not what's happening here. They're just observing that we haven't. They're not proposing that we don't.

MEMBER SKILLMAN: So not presently

consider?

MS. BONE: Yes, we should say --

MEMBER SKILLMAN: Do not presently consider.

MR. SCHOFER: Yes, fundamentally it's omission of specificity because we do address decontamination efforts and that, but we don't explicitly address whether you'd have a GDP impact as a result of doing contamination during that period of time.

VICE CHAIR RAY: Yes, you don't mean that it's the policy not to do it.

MS. BONE: No, this is what you see.

MEMBER SKILLMAN: Correct.

VICE CHAIR RAY: This is a gap analysis. It's supposed to identify what we do and what we don't do. Now the real issue, we'll get to that after the path forward discussion.

MEMBER SKILLMAN: Okay.

VICE CHAIR RAY: All right. Where do we go with this? What's going to happen? You guys have at least indicated in the last year that we expect to have a continuing dialogue, and so we're trying to tell you what to do before you've made up your mind what you think you we ought to do is probably the

question.

MR. SCHOFER: Okay. Thanks.

MS. BONE: Any other questions on this enhancement or others?

(No audible response)

MS. BONE: Okay. With that, we do move to the path forward. We did try and put some more beef to this section in the paper itself and more discussion here to clarify, but the staff will continue to update Cost Benefit Guidance to harmonize across business line and programs. And that's consistent with what we've said in the previous SECY papers, that we recognize cost benefit practices may differ among business lines and programs and that we will plan to document any basis for dispositioning any differences in practices.

And that's something that we got also feedback from the last ACRS meeting, that this work is only as good as we're capturing what we're going, what we're learning, how we're dispositioning any issues. So we do plan as we are updating the guidance to have a robust tracking system of how we're looking at these issues and whether changing them in the guidance or whether that's just reinforcing the technical basis for the current guidance, which way we'd go. We will

continue to track that as we move forward. Now again, this is just the first step in a multi-phase effort, multi-year effort. Pardon me.

The staff will continue to engage the ACRS during the process to update the Cost Benefit Guidance. As we mentioned in an earlier briefing on SECY-14-002, we plan to have the -- the guidance will follow the typical NUREG development format, go out for public comment, engage with the ACRS, that kind of thing. So there will definitely be many more conversations as we produce more guidance documents and move forward in this process. And the staff will seek Commission guidance regarding potential policy issues.

MR. MOHSENI: Just to another point --

MS. BONE: Oh, yes.

MR. MOHSENI: -- to add to the impact on critical infrastructure and the iconic impacts, iconic value. In NEPA space there's a recognition of the impact of the decision that's broader than just cost benefit analysis. It does assess, it does inform the policy makers to go -- if you had to license a new plant, the NEPA assessment would capture all of these items, but in the regulatory analysis, which is really our piece here, which is a small subset of policy

making in a broader sense, the reactors are already out there.

We're changing a rule, adding a requirement. So it's important to realize that at the beginning of siting you do all these where are you located, what's the impact on infrastructure, what are the accidents that could -- and the accident analysis part in a NEPA environment does identify impacts on infrastructure, critical infrastructure, population by age group, by ethnicity, by economic segments. And so it's not that these are not covered somewhere.

The question is when we come back next time with you, if you don't see it in -- if we say we've dispositioned it, it may be that this disposition path is -- it's adequately covered in a broader sense for the Agency for the policy makers to be aware. But even though you don't do a cost benefit analysis for a critical infrastructure, the information is there for them to understand there might be an impact.

CHAIRMAN STETKAR: But, Aby, in some sense that's a go/no-go initial determination. Here we're talking more about deltas. If you don't pass the no-go filter initially, you don't have the plant to do the evaluation. Here we're talking about deltas given

the go.

MR. MOHSENI: Indeed. And to that --

CHAIRMAN STETKAR: And so, in terms of my example of whether it's -- my economic example is could a potential change reduce the risk and a potential depending on how you -- I always get the math wrong, but the potential benefit of that change could be measured in terms of an effect on the Dow Jones industrial average. Now that in principle could have been considered in the initial pass/fail criterion, but whether or not that was is a different issue.

Change to a current infrastructure that may have grown up around a plant that could have been sited, oh, out in the middle of the desert with nobody around when it was initially built and now has, oh, town around it is different when you do the delta.

VICE CHAIR RAY: Well, this covers a lot of ground and we'll discuss among the Committee members where we feel we are at this point in time. I guess I would just ask this question: When we next look at presumably some progress you've made in Phase 2, can we ask that you tell us so that we don't have to look to see how things were dispositioned, the gaps, how they were dispositioned? Otherwise, we have

to search and say, well, I guess this issue has been dealt with in some certain way.

That way people can feel more comfortable if they have a viewpoint that they might wait to see how you dispositioned it as against saying, well, here's what we think today and we ought to take into consideration. That may happen. But if we are assured that we can track these things; and you've already said that's what intend to do, then perhaps we'll be more willing, in some cases anyway, to wait and see, well, what was the outcome and then give you our views about it. But as we say, we'll talk about that further.

It's hard to get our mind around what you're expectations are. I won't call it your plan necessarily, but how do you see this Phase 2 now? Is it going to start soon? Has it already started? When do you think it might be over so that we've now completed the update and it goes out for public comment? Do you expect that to be a single cycle or more than one? So is this a process that doesn't have an end, do you think, or what?

MR. SCHOFER: It's a process. We're not even through Phase 1 yet, so we'd like to finish, you know, do the initial update of the regulatory guidance

so that it's formatted differently, get rid of outdated information and get that piece done before -- and then start working on things which are more policy-oriented.

VICE CHAIR RAY: Can you do that without public comment? Does the Agency let you do that?

MR. SCHOFER: No, no. No, it's done through public comment. This is a NUREG, so it will go out for public comment.

VICE CHAIR RAY: Even Phase 1?

MR. SCHOFER: Even Phase 1. In addition, we have other guidance documents that we're updating a dollar per person rem, replacement energy costs, and we're working that as well. We have that as a higher priority than these items which are just being rediscovered, let's say.

VICE CHAIR RAY: Are you putting value on carbon emissions, just by the way?

MR. SCHOFER: We do put value on carbon emissions.

VICE CHAIR RAY: Dollar value?

MR. SCHOFER: There is dollar value that is published by EPA.

VICE CHAIR RAY: Yes.

MR. SCHOFER: And that was a consortium of

various agencies, and we would use that value.

VICE CHAIR RAY: Okay. So replacement energy costs would include both market-based costs as well as carbon emission costs, whatever that is judged to be?

MR. SCHOFER: So I mean there is a lot in progress, and this is just going into that overall plan and we would need to prioritize going through the process.

MEMBER SCHULTZ: So I guess my question would be when you say this is lower priority, is the plan linear? Is this activity going on while you're doing the update? From what we heard today, I think what Harold was asking is when might we see another rendition of this in terms of its next step, which would be to identify the gaps? And then you have to get all the whys, the whats and the hows to see if in fact it all fits together in the regulatory analysis or not. So I guess that's down the road --

MR. SCHOFER: It's down the road.

MEMBER SCHULTZ: -- but I don't know. I have no concept of time here. Maybe you don't either.

MEMBER REMPE: But instead of time do you have a concept of how many staff man-years it is or something like that? I mean, I know other

priorities --

MR. MOHSENI: Yes. Yes.

MEMBER REMPE: -- come in sometimes, so have you estimated how much for Phase 1 versus a subsequent phase?

MR. MOHSENI: See, there's two strikes against this project. One is there's nothing broken in the system today. It's enhancements. Most of these are overlaps with other stuff. And locally we improve whatever we can because the flexibility is there. You don't need a new direction from everyone to improve, for example, an uncertainty analysis. We can do that.

The second strike against this is all the other work we do -- and right now with Fukushima stuff, it's the same group of people basically working all the rules that you have been debating. And we are trying to hire to get to the point where you have seasoned individuals who understand all the nuances of the historical evolution of where we are. We got those two major challenges with us. And with that, if you had to choose where he would spend his time or she would spend her time, the Fukushima stuff is like Congress is asking for it, everyone is asking for it. We got to do the regulatory analysis for those.

SAMGs, for example. It's not an easy thing. And we only have seven spots, four of which are vacant today.

MEMBER CORRADINI: Seven what? I'm sorry.

MR. MOHSENI: Seven spots in the regulatory analysis team.

MEMBER CORRADINI: Oh, okay.

MR. MOHSENI: Which is the backbone to these rules that you are looking at. And so, it's been tough. For that reason we hesitate. I know --

VICE CHAIR RAY: We understand that.

MR. MOHSENI: -- ideally --

MEMBER CORRADINI: Have enough information so we understand.

MR. MOHSENI: Yes.

MEMBER POWERS: Fred, you can ask for a raise, you know?

(Laughter)

MR. SCHOFER: If you could put that in your letter.

(Laughter)

VICE CHAIR RAY: We're really somewhat in the same position you are, because you were here this morning. Some of you maybe understand.

MR. MOHSENI: Yes.

VICE CHAIR RAY: So we're trying to

allocate our time properly also.

MEMBER REMPE: I guess I still haven't heard does it take a staff-year to finish Phase 1 or, I mean, do you have an idea of how much work scope is required to get it done?

MR. MOHSENI: The amount of work is not insignificant. As you -- dispositioning to the best -- you know, public meetings, looking at public comments, it's probably we're talking years, not --

MEMBER REMPE: Multiple staff-years?

MR. MOHSENI: Yes. You want to --

MR. SCHOFER: Yes, we do have Phase 1 estimated, and it's on that order, however, it --

MEMBER REMPE: On that order being one staff-year or multiple staff-years for Phase 1?

MR. SCHOFER: A couple staff-years.

MEMBER REMPE: Okay.

MR. SCHOFER: The issue is that the resources are redeployed for other --

(Simultaneous speaking)

MEMBER REMPE: That's fine. I understand that that's happened a lot with Fukushima, but and then Phase 2 could be a lot more, which we have not even tried to estimate it. And do you have a feel for when it's done?

MR. SCHOFER: Phase 2 hasn't been estimated yet. That is correct.

MEMBER REMPE: Okay.

VICE CHAIR RAY: Okay. I believe from the crackling sound that the bridge line is open and we invite comments from members of the public who are on the line. And if there are, if one of them would just speak up to verify that, we'd be most grateful.

(No audible response)

VICE CHAIR RAY: Hearing none, we will then check in the room here to see if there are any members of the public who would like to step forward and give us comments on this subject.

(No audible response)

VICE CHAIR RAY: None? I'll turn it back to you, Mr. Chairman, and thank you these folks for their fine presentation.

CHAIRMAN STETKAR: Thank you, Harold. A process issue. If you're interested, what I plan to do is at 5:00 we'll have a brief discussion among the Committee members whether we're going to write a letter on this particular topic. So if any of you are interested in that, it will be at 5:00. We're going to tee that up first.

With that, we will recess until -- when

are we supposed to recess until -- 3:30.

(Whereupon, the above-entitled matter went off the record at 2:58 p.m. and resumed at 3:31 p.m.)

CHAIRMAN STETKAR: We are back in session and the next topic on our agenda is the Branch Technical Position 8-9 on open phase conditions in electric power systems. And Dr. Dennis Bley will lead us through this.

MEMBER BLEY: Thank you, Mr. Chairman. It's good to get to an interesting session.

(Laughter)

MEMBER BLEY: We had a good Subcommittee meeting a couple weeks ago and really dug into this. This all started; we'll hear about all this from the good folks who are going to present to us, with an incident at Byron that then traced back to a series of other open phase, loss of phase events, some of which weren't detected for several weeks. It can be a really tricky condition to detect, and it can also cause some significant problems. And we're going to hear from the staff on the Branch Technical Position and a bit of the history, and we're going to hear from NEI and from EPRI on where industry is headed and a kind of unique solution that was developed for the alarming such a condition.

At this point I'm going to turn the floor over to Jake Zimmerman and let us get started.

MR. ZIMMERMAN: Okay. Thank you. I'm Jake Zimmerman. I'm the chief of the Electrical Engineering Branch in the Division of Engineering, the Office of Nuclear Reactor Regulation.

Today we're here to brief you on, as Dr. Bley indicated, the loss of phase conditions issue. We briefed the Subcommittee back on November 17th. With me today is Singh Matharu. Singh is a senior electrical engineer in the Electrical Engineering Branch, and Singh will brief you on the status of the staff's resolution of this issue, and then actions we've taken and path forward to completing and closing out the bulletin.

As many of you know, on July 27th, 2012 we issued the NRC bulletin related to the open phase issue. The bulletin did require a written response from all operating and combined licensees for nuclear power reactors within 90 days. All of them did comply within that time. And the staff reviewed all of those responses in detail and issued a summary report that is publicly available.

Since that open phase issue has come up, the industry and the staff have proactively engaged to

address this issue. To the industry's credit, we appreciate the demonstrated leadership both by Exelon and the Nuclear Energy Institute and their commitment to resolving this issue. To date the staff has conducted 11 public meetings and supported the industry initiative to resolve the open phase issue. As indicated, industry representatives are here to give you a sense of their efforts.

The staff also issued, as the title of this session is, the Branch Technical Position, which we know you all have a copy of and have questions about that. This position is intended to provide guidance for future reviews of issues that come up. It is the staff's position for how to resolve this issue. In addition we've developed a draft Interim Enforcement Policy, IEP. That would finalize the Agency's regulatory action on this open phase issue.

We did receive comments on the Branch Technical Position and also some comments on the IEP, or Interim Enforcement Policy. We are in the process of reviewing those comments and finalizing the position. The Interim Enforcement Policy will need to be presented to the Commission as a policy decision and approved by the Commission should they choose to do so.

Lastly, since the Subcommittee meeting we issued a letter to NEI on November 25th, and this was in response to two previous letters that they had submitted to us. One was March 21st of this year and the other on August 14th. In response to this letter the staff provided our position, our formal position in writing on what we believe it takes to resolve this issue. The staff provided also some next steps that each licensee should take to resolve the issue.

MEMBER BLEY: Was this the November 25th letter?

MR. ZIMMERMAN: Yes, sir.

MEMBER BLEY: Okay.

MR. ZIMMERMAN: And you have a copy of that letter. So with that kind of as a high-level background overview, I'm going to turn it over to Singh Matharu who will walk you through the staff's presentation. Thank you.

MR. MATHARU: Good afternoon. Like Jake said, my name is Singh Matharu. Work in the Electrical Branch, NRR. And I will try and go through a bunch of slides and hopefully do it in a timely manner and have time for questions also.

Going to talk about the open phase condition. Going to give you an overview of some

operating experience and the type of connections that have been involved. Going to briefly go over the regulatory requirements, give you an overview of actions that staff has taken and discuss the technical position, the BTP, and looking forward where we go.

I've got about 16 slides. I know I don't have enough time to go through all of them, so on some of them I'll skip and we can discuss them as questions on some of the technical issues.

So loss of phase condition. The open phase condition, or OPC as we call it, is loss of one of the three phases of the offsite power circuit on the high voltage side of a transformer connecting an offsite power circuit to the transmission system. And we are assuming that there may be a high-impedance ground fault involved or there may not be a high-impedance ground fault involved.

There's also operating experience where some licensees had loss of two phases, so two out of three phases under similar condition where a breaker may not close and you have a single phase supplying power to the unit.

The consequences of loss of phase is it creates an unbalance in the AC power system. The type of unbalance depends on the transformer configuration,

depends on the transformer loading, depends on the plant configuration. And there's all the reasons highlighted there that can impact what kind of unbalance you get. The consequences also effect rotating equipment, mainly motors that can overheat. They may trip if they're core protector devices or they may burn out.

Overview of what happened at Byron. Essentially the open phase condition occurred at the metering transformer and the line in red shows the circuit that was only in two phases. At that time Unit 2 was at full power and they had half the buses being supplied by the unit aux transformer and the other half of the plant was supplied from the offsite source. As a consequence of this open phase condition, large motors tripped, gave them a unit trip. The unit trip also gave a transfer from their unit aux transformer buses to the offsite buses, and as a consequence some of the other loads also tripped due to overload conditions. The big picture, this open phase condition rendered the offsite source inoperable and also rendered the onsite inoperable primarily because the detection schemes on the safety buses did not function.

So for us the connections that we are

really looking at, or connections of interest are really on the high side of the transformers, as I said, on the switchyard breakers. And on this picture I've got about three transformers and we're showing the connections that are of interest to us.

There are also connections that can be a challenge. Essentially the isophase bus that goes from the unit aux transformer. Sorry, from the main generator to the unit aux transformer. We are not particularly concerned about those.

CHAIRMAN STETKAR: Singh, in the Subcommittee meeting we had some discussion about the generator breaker-type configurations, and I thought you said you were going to go back and look to see whether all plants in the U.S. that had that configuration have isophase bus. Did you do that?

MR. MATHARU: Yes, sir. Your question was did I do 100 percent check on all the plants. I did not do 100 percent check. I sampled about 55 of them and all had the isophase connection that's shown here. I have not seen -- I have not come across one. My research is still going on, but I have not come across one that shows anything different than the isophase configuration that I'm showing here.

MR. GREENLEE: And the industry is doing

100 percent.

CHAIRMAN STETKAR: You have to come to the microphone and identify yourself and speak with sufficient clarity and volume.

MR. GREENLEE: And as we discussed at the Subcommittee meeting the industry is doing 100 percent sampling. We've already notified the industry that they need to go look to see if there are any vulnerabilities in the low sides.

MEMBER BLEY: Identify yourself for the record.

MR. GREENLEE: I'm sorry. Scot Greenlee.

MEMBER BLEY: Thanks, Scot.

MR. MATHARU: We jumped a little ahead. All I was going to give here on this slide was some of the background. Eleven operating events worldwide, three of them in the U.S., couple of them in U.K. and Sweden and Spain. In Sweden they had two poles on a breaker that did not go fully closed, and so a double-phase issue.

So the type of circuits that exist out there. Again like we said, this is the isophase connection on my left picture of the isophase connection inside. And we don't think it's going to be a connection problem here. It's fully loaded, very

heavily bolted, unlikely to have a failure in there. Cable connections, breakers and bus bar connections. Those type of connections are really not of a concern. What we are looking at is overheads come into insulators on to transformers and breakers that may not close properly.

So where are we? We are looking at the requirements in the General Design Criteria 17 that's related to requirements for onsite and offsite power sources. And we're also looking at 10 CFR 50.55a(h)(2), which essentially requires automatic actions to work the safety systems, allowing them to perform the safety functions. And there are tech specs associated with that.

So far what we have done. I think Jake gave an overview. Followed through with the inspection at Byron. We have details on the overall event that happened there. Subsequent to that we issued information notice. We followed up with a bulletin and we got responses to the bulletin from the licensees. We have looked at the responses. We have looked at the comments and we have come to a resolution on where we're going.

In addition to that we are supporting the industry in looking at the resolution. We're also

participating in an international effort because it's an international event. And with IEEE to develop a standard or at least a method of resolving for new plants.

So what are we asking? For the active plants we are saying you should be able to detect an open phase condition on the high side of the transformer connected to the offsite source. We expect an alarm in the main control room and we expect automatic actuation to mitigate the event. For the passive plants we are saying as a minimum you need to detect and alarm in the control room.

The big question is does the detection system have to be Class 1E or non-Class 1E? So what we are saying is we are giving a prescription or a definition of what the expectation is for the system that licensees can offer. We are saying it should be single-failure proof and it should not result in mal-operation, mis-operation. In other words, separation of onsite from the offsite. It should automatically detect and alarm in the control room and if the offsite power circuit is degraded due to an open phase condition, the power source for the onsite safety-related systems should be transferred to the onsite system. And we expect tech spec surveillance

requirements if the detection system is considered to be inoperable.

CHAIRMAN STETKAR: Singh, go back to that slide for a moment.

MR. MATHARU: Sure.

CHAIRMAN STETKAR: You skipped the second half of the third bullet. Can you explain what that really means?

MR. MATHARU: The --

CHAIRMAN STETKAR: Right.

MR. MATHARU: Within the time assumed in the accident analysis?

CHAIRMAN STETKAR: That I got. It says given a concurrent design basis accident. What do you mean by that?

MR. MATHARU: So what we are assuming is that in a typical design your offsite source is in a standby mode. You have a design-basis event. You're going to get a reactor trip, a turbine trip and generator trip and you're going to transfer to your offsite source.

CHAIRMAN STETKAR: Well, that's one configuration.

MR. MATHARU: Yes.

CHAIRMAN STETKAR: There are many others.

MR. MATHARU: Correct.

CHAIRMAN STETKAR: So go on.

MR. MATHARU: So this would be a generic statement saying you want to transfer and allow all of your sources to meet your accident analysis requirements. In other words, if you assume your water is in the vessel in 50 seconds or 60 seconds, you want to make sure that happens.

CHAIRMAN STETKAR: I'll have to think about that.

MEMBER BLEY: I've read most of this stuff you've written and I have trouble finding any place that requires looking at two concurrent events both of fairly low probability at the same time. I'm questioning the requirement for automatic transfer. And you hook it to the GDC-17; I've read that pretty carefully, and hook it to 50.55(h)(2), which is a reference over the IEEE standard. And you hook it to a couple of arguments. One was tied to the initial event at Byron and said, gee, if the operators hadn't been quite as fast as they were, we might have gotten into a small LOCA via a sealed LOCA, but that takes a little time and it's a fairly slow-evolving event. And then in another place you pull this concurrent thing out and effectively look at a large LOCA, which

if it happened at the same the DBA, a doubled-ended guillotine break, yes, we'd be stuck.

But if you have the open phase condition and you have very reliable detection and alarm; and from what we hear training and procedures for the operators on how to deal with that, it's not going to take very long to deal with it. So you ought to be looking at, given I'm sitting there in an open phase condition and it's alarmed, what's the chance over say the next half our, hour, two hours that you get this concurrent large LOCA? And that's pretty rare.

VICE CHAIR RAY: If they're caused by the same event, Dennis?

MEMBER BLEY: Well, if they're caused by the same event, that in fact would be a reason to look at concurrent. But we don't usually look at concurrent. And the large events that could do that we look at as those large events.

VICE CHAIR RAY: The only reason I say it is because the offsite power connection isn't seismically qualified, for example.

MEMBER BLEY: That's true. It's not. In fact, it almost always comes down completely in a severe seismic accident.

VICE CHAIR RAY: You're darn right it

does.

MEMBER BLEY: So we wouldn't have the open phase. We'd have nothing.

VICE CHAIR RAY: Well, you can't guarantee it. Yes, I'm sorry. Go ahead.

MEMBER BLEY: Yes, so I was just going back to where do we come up with this concurrent concept, because I don't see it elsewhere in the regulation. And I don't see it for other events. I'm kind of curious why we did under this one. I can't quite figure it out.

MR. MATHARU: Well, from the requirements for onsite and offsite power we postulate loss of offsite power simultaneous with large-break LOCA or a design-basis event be postulated degraded conditions with the large-break LOCA event, design-basis event. And same would apply to an open phase condition. Again, Byron took eight to nine minutes I think, or almost close -- it was 12 minutes before they recovered. And I think they calculated --

MEMBER BLEY: But they didn't have this new highly-reliable indication that you'd have to have to have an automatic system work, too. I mean, that's not going to work on its own. It's going to need to be detected to actuate some actuation logic.

MR. MATHARU: If we go back and look at some of the plan designs that you would have, if I look here, some plants would feed all safety buses from this source. And they may be running. Some of the safety-related equipment is operating during normal plant operation.

MEMBER BLEY: I mean, if you lose offsite power and you don't get it right back, you're sitting there with no offsite power for an extended period of time --

MR. MATHARU: Yes.

MEMBER BLEY: -- over which time you want to be protected against the LOCA.

MR. MATHARU: Correct.

MEMBER BLEY: In this case we've got a situation that's -- I won't say momentary, but it's probably on the order of -- and I'd have to talk to the people in the plants, but I would think it's probably less than 20 minutes, given an alarm, getting yourself separated from the bad feeder. So our exposure time to the large LOCA is very short.

MR. MATHARU: Yes.

MEMBER BLEY: So I'm still having trouble seeing where the requirement comes from and why we're pushing that way.

MR. MATHARU: Well, again, I agree with you that the probability argument is really low.

MEMBER BLEY: Really small.

MR. MATHARU: But the consequences of the event -- and that's what I was going to strive here, in normal operation there are some safety-related loads operating on these buses, in this case, and there is a potential to damage them.

MEMBER BLEY: There is the potential to damage them.

MR. MATHARU: And they may not be --

MEMBER BLEY: The longer they run --

MR. MATHARU: The longer they run.

MEMBER BLEY: -- on that unbalanced condition --

MR. MATHARU: Correct.

MEMBER BLEY: -- the more likely they are to be damaged. And to me it's not likely they're going to run very long if you have a real alarm, which we haven't had.

MR. MATHARU: Well, you're talking -- in electrical terms you're talking about minutes, a couple of minutes to burn out. More than five minutes. Depending on how much --

MEMBER BLEY: Well --

MR. MATHARU: -- what quality of insulation you have.

MEMBER BLEY: And assuming the thermal overloads don't go, which they have --

(Simultaneous speaking)

MR. MATHARU: -- overloads.

MEMBER BLEY: -- on some of these events.

MR. MATHARU: Correct. In some cases --

MEMBER BLEY: I mean, they're there to protect you from that.

MR. MATHARU: That is correct.

MEMBER BLEY: Well, not from this particular condition, but --

MR. MATHARU: They may or they may not. We are not relying on the protective devices. We need to ensure that the safety-related equipment is protected.

CHAIRMAN STETKAR: Help me out, if you can. And go back to slide 12, because I still want to make sure that I understand the -- because it's written you come back to individual plants always, and the Branch Technical Position is written for everybody.

MR. MATHARU: Right.

CHAIRMAN STETKAR: So that third bullet,

if I use a logical statement, is the Branch Technical Position saying that the automatic transfer is required only if I have a concurrent design-basis event, or is it always an automatic transfer because I must anticipate a design-basis event?

MR. MATHARU: The Branch Technical Position says you have time to respond. If your time has run out, if your protective devices cannot handle it, then they're asking for it.

CHAIRMAN STETKAR: And that's --

MEMBER BLEY: Can I rephrase it?

CHAIRMAN STETKAR: Well, you can -- yes.

MEMBER BLEY: I think what John's asking you is are you asking for logic that given you have an open phase it automatically transfers or one that says given an open phase and an accident condition --

CHAIRMAN STETKAR: Like an ESFAS signal.

MR. MATHARU: Yes.

CHAIRMAN STETKAR: Yes to what?

MEMBER BLEY: For which of those two?

MR. MATHARU: If you have an open phase condition and --

MEMBER BLEY: Oh, incident with --

MR. MATHARU: -- an ESFAS --

CHAIRMAN STETKAR: An ESFAS condition?

Okay.

MR. MATHARU: -- then you --

(Simultaneous speaking)

CHAIRMAN STETKAR: Then within a --

MR. MATHARU: Correct.

(Simultaneous speaking)

CHAIRMAN STETKAR: And let me take an arbitrary time window of 37 seconds. It's arbitrary. But the condition and -- and I'll just use a generic ESFAS signal, and at the end of 37 seconds under that logic I would then automatically transfer?

MR. MATHARU: Yes.

CHAIRMAN STETKAR: Is that -- okay.

MR. MATHARU: That's a --

CHAIRMAN STETKAR: And that time would obviously -- could be different depending on the plant.

MR. MATHARU: Correct.

CHAIRMAN STETKAR: But I need that logical coincidence of an ESFAS signal and the open phase to initiate the automatic transfer.

MR. MATHARU: That's correct.

CHAIRMAN STETKAR: Okay.

MEMBER BLEY: And if you only have the open phase, you don't need an automatic transfer?

MR. MATHARU: Not necessarily. That is correct.

MEMBER BLEY: Okay. I misread the way it was written in the --

(Simultaneous speaking)

CHAIRMAN STETKAR: Thanks. That really helps me.

MEMBER BLEY: Me. too. Back to you.

MR. MATHARU: Again, I think we consider the event. We have a lot of operating experience now. The BTP is going to provide guidance for future licensing actions. And like I said, we're looking at single open phase condition with and without high-impedance ground fault. And Byron the first event that happened was a high-impedance event. The second event was a non-high-impedance. It was grounded. So the second event was fairly regular ground fault conditions that were detected and everything happened as required. And we're looking at operating and new reactor phase.

We asked questions on the draft Branch Technical Position and the comments. We have resolved comments that we received in the process of looking at some of them. Essentially some of the questions that were raised were similar to what you're asking here.

Does it need to be automatic? Does it have to be Class 1E? Is the OPC, the open phase condition, beyond-design-basis? Again, technical specification, are they applicable? Do the existing plants comply with the requirements of GDC-17? And how are we going to apply it to AP-1000 or the passive plants that don't rely on an offsite source for the first few hours?

Path forward. Essentially we're working at the industry to figure out our optimum options. We have laid our position out in the narrative NEI. And essentially we're looking at a closeout letter, and I think Jake mentioned the enforcement actions that we are planning. That's most of what I had.

MEMBER BLEY: Where have you folks come down on the issue of whether it needs to be safety or not? Your second bullet there.

MR. MATHARU: We are accepting both, but with the --

MEMBER BLEY: Is that written down?

MR. MATHARU: Yes, sir. It's in the --

MEMBER BLEY: It's in the BTP?

MR. MATHARU: It's in the BTP. It's also in the letter.

MEMBER BLEY: Okay.

MR. ZIMMERMAN: Actually the most recent letter that we issued clarifies that further. If you look at the fourth page of the letter --

MEMBER BLEY: This is the November 25th?

MR. ZIMMERMAN: Yes, sir.

MEMBER BLEY: Okay.

MR. ZIMMERMAN: We do state it is the staff's position that any licensee solution (Class 1E or non-Class 1E) to address OPC should meet the following functional requirements: And then we list four functional requirements.

MEMBER BLEY: Now given this clarification in this letter, are you intending to roll some of that back into the BTP, or just leave this as clarification on --

MR. ZIMMERMAN: No, we would revise the BTP based on the comments that have been provided, the feedback that we will receive from --

MEMBER BLEY: Okay.

MR. ZIMMERMAN: -- the ACRS --

MEMBER BLEY: So it will look like this? Right now you think it will be like what's in the letter?

MR. ZIMMERMAN: Yes, sir.

MEMBER BLEY: Okay. Anything else from

the Committee?

(No audible response)

MEMBER BLEY: Thank you. Okay. Thank you.

CHAIRMAN STETKAR: Thanks very much. Who's coming next? NEI next?

MR. GREENLEE: NEI is next.

CHAIRMAN STETKAR: NEI is next. Great.

MR. GREENLEE: All right. Good afternoon. I'm Scot Greenlee. I'm the Senior Vice President for Engineering and Technical Services at Exelon Corporation, and I've been the executive sponsor for this issue since January of 2012 when Byron had the event.

As Singh noted, the big change since we had the Subcommittee meeting was the letter coming out on the 25th. That was a big milestone for us and we do intend to take what NRC has put in that letter and we will document how our designs -- and we're going to talk about those a little bit more in detail, but how our designs will meet the staff requirements.

MEMBER BLEY: Scot, just a quick question. I've seen their response. I don't think I saw the letter from Tony to the NRC. Is their response much as you expected, or are you guys sweating over parts

of this?

MR. GREENLEE: It's not ideal for us, and I've explained to Jake. I even talked to the EDO on Tuesday about it. And we've been very open and honest. For example, we don't think the Interim Enforcement Policy is necessary because it tends to confuse things. Our position has been all along that we are licensed the way we are. We have a gap to GDC-17 that we are going to close, but that doesn't mean we're outside our current licensing bases. Once we close that gap, we will have a new licensing basis.

But the Interim Enforcement Policy doesn't hurt anything either, so when we've talked to the Commissioners recently, we encouraged them to approve it. And that also gives us a piece of paper that will help us just in case there's some change down the road in staff thinking. These things could always change. So, but the actual requirements that Jake and his staff have laid out in those four bullets, we can live with those requirements.

MEMBER BLEY: Okay. Thanks.

MR. GREENLEE: Okay. The other thing I'll just mention, we talked a little bit about the action coming out of the last Subcommittee meeting. We have notified the industry to go take a look at other

connections that could be vulnerable to causing an open phase that are outside of the high side of the transformer. So we will do a 100 percent review of that as an industry. And if we fund vulnerabilities, we'll review that and determine what the best --

(Simultaneous speaking)

CHAIRMAN STETKAR: For the non-electrical members of the Committee, I'll translate. Other places than the switchyard.

MR. GREENLEE: Yes, and the issue, the question really is -- because if you look at the pictures that Singh put up, the solid bus work design, what happens when you start faulting that bus work design inside what we call our non-seg bus work, it faults over because you get plasma arcing very quickly and you fault over and the fault detection circuits will take it out.

CHAIRMAN STETKAR: And there's operating experience for that.

(Laughter)

MR. GREENLEE: But if somebody had the same design on the low side that they have on the high side, they would have a different vulnerability that we have to address.

MEMBER BLEY: And, Bob, at the

Subcommittee you talked some about the other kinds of faults that you either test it or analyze the new solution on. Are you going to talk about that today?

MR. ARRITT: Yes.

MEMBER BLEY: Okay.

MR. ARRITT: I added that slide, yes.

MEMBER BLEY: I didn't know how many slides he had results on.

MEMBER SKILLMAN: Scot, I found your comment very important and perhaps timely given all that we spoke about this morning. You said you really don't believe that the Interim Enforcement Policy is necessary.

MR. GREENLEE: Correct.

MEMBER SKILLMAN: Your designed and licensed to General Design Criteria-17. There is an increment that is still needed to completely fulfill General Design Criteria-17, and by and large that's not a problem. You're simply going to do it.

MR. GREENLEE: We're just going to do it. That's correct.

MEMBER SKILLMAN: Just making sure I heard that accurately.

MR. GREENLEE: That's correct. And there has been some concern with some of the staff that,

hey, if you can put it in, you can take it back out under 50.59. But if you think about it, once we put in our FSAR that we're meeting GDC-17 by this certain design, you'll never be able to get it back out under 50.59.

MEMBER SKILLMAN: But you still have your FSAR written from the perspective that you are fulfilling your present interpretation --

MR. GREENLEE: That's correct.

MEMBER SKILLMAN: -- which is of General Design Criteria-17.

MR. GREENLEE: That's correct. And we're going to create templates for the entire industry on how to fill out your FSAR, how to update your tech spec bases so that it's absolutely clear where we started, and this is what gap we were closing, and this is our new licensing basis.

CHAIRMAN STETKAR: We have no idea how that's going to play out for the operating plants, but we've just recently seen a new reactor license, or new COL applicant that amended their FSAR with that type of -- they've identified this issue and essentially inserted a paragraph confirming that they're going to address it. So I suspect that's what you're talking about.

MR. CLEFTON: We're working with them as well. This is Gordon Clefton, NEI. We're working with the SDP folks as well.

CHAIRMAN STETKAR: Yes, I didn't want to necessarily identify them, but that's okay.

MR. CLEFTON: They're probably here.

MR. GREENLEE: Okay. Okay. So the next slide. Singh actually covered some of this, but we had two events at Byron about a month apart. On Unit 2 that was the significant event. That was the one that Singh covered. And it was different than the Unit 1 event because when the line separated, the part that fell on the ground and actually grounded out was on the transformer side. So there was no fault because there was no energy to propagate a fault. So that then translated the open phase condition through the transformer and gave us these unbalanced loads, which caused all running three-phase equipment to trip very quickly. The four kVs typically tripped on instantaneous over-current. Four-eighty-volt loads on thermal overloads.

The good news is though the operators were able to diagnose it in about eight minutes, recognized it separated from offsite power. All the four kV loads came back on the diesels automatically, so they

just came right back loaded on the diesels. The 480-volt loads the operators had to go out and actually reset the thermal overloads, but they got the plant back pretty quickly.

Whereas on Unit 1 what happened when we had the open phase condition, the high side actually fell to the ground and faulted. And so we had fault protection which sensed it, isolated the transformer and the Unit 1 actually stayed online, did not trip. We did have a loss of offsite power obviously, but a much different event because the fault circuitry detected it and protected the unit.

And you can see at the very bottom of this slide the Ohio Brass porcelain insulator manufacturing defect was the cause of the two events. And I'll show you on the next page or on a subsequent slide what that looks like.

And this just illustrates what happened on Unit 2. That metering circuit on the left side you see an intact system. On the right side you see where the metering circuit has broken. And then the line fell to the ground, grounded, but did not fault.

Next slide. And then you can see a kind of a picture of what actually occurred on Unit 2 on the left, and on the right you can see the defective

insulators that actually caused this problem, an original manufacturing defect. And we've gone through and are eliminating all of our Ohio Brass insulators because we found quite a percentage of them that actually had this defect internal to the insulator.

Next. Just an FYI, we are --

MEMBER CORRADINI: The defect was what, just a fracture in the ceramic?

MR. GREENLEE: What you can see in the middle of those pictures, it's the porcelain never really gelled inside. And we think, at least the expert thinking was they probably got some water in there when they were heating up the porcelain for final manufacturing.

MEMBER CORRADINI: And the second question I was going to ask is so has this happened at fossil plants?

MR. GREENLEE: It's a very, very rare occurrence. They don't really see this anywhere. That's why it was unusual. When we first had this situation on Unit 2, we looked at fossil plants and everybody said, no, we don't see that sort of thing happening.

MEMBER CORRADINI: But the root cause here was this particular porcelain insulator?

MR. GREENLEE: Right.

MEMBER CORRADINI: Which is unique to nuclear plants?

MR. GREENLEE: No, but we've seen it rarely at the fossil units. We had one of our switchyards one yard out that actually had a failure similar to this. It's just --

CHAIRMAN STETKAR: Would you pick it up though on fossil units, because they might -- I mean, y, they don't report stuff.

MR. GREENLEE: Yes, but --

(Simultaneous speaking)

CHAIRMAN STETKAR: If they burned up a bunch of pumps, you would see it, but if it's just switchyard work or transformer work or something like that, you might not --

MEMBER CORRADINI: So they'd feel no need to report it up from a reliability --

MR. GREENLEE: Well, yes, but we went out -- because we switchyard companies. We own ComEd, we own PECO, we own Baltimore Gas & Electric. So we went to those folks and said, hey, do you see this? The answer was, no, this is -- it's very rare to ever see a failure like this. And that's why we weren't as aggressive as we should have been to get this out of

the plant before Unit 1 happened. Once Unit 1 happened, we shut both units down and we got rid of all of the under-hung insulators in that switchyard.

MR. CLEFTON: It was in place 12 years though. That's where it failed.

MR. GREENLEE: It was more than 12, yes.

MR. CLEFTON: Minimum 12.

MR. GREENLEE: Life of the plant, pretty much.

MEMBER BLEY: Now, the staff went back and found 11 others over 15, a little less than one a year throughout the nuclear business, maybe. That's something less than 1 in 100 a year per plant, so it's not real likely, but across the whole fleet -- well, unless you have 150, you wouldn't be seeing it though very often. It would be pretty sparse.

MR. GREENLEE: No.

MEMBER BLEY: And yours was the only one that was due to this problem, right?

MR. GREENLEE: That's right.

MEMBER BLEY: Yes.

MR. GREENLEE: That is right.

CHAIRMAN STETKAR: There are other ways this can happen.

MEMBER BLEY: Yes.

MR. GREENLEE: We're very close. We tried to develop some UT technology to see if we could find these defects in situ. We were unable to do that, but we've got a guided wave system we've been testing out and we think it's going to work. So within the next six months I would expect we may have something that can actually test these in situ in our --

CHAIRMAN STETKAR: But that's particularly to look at -- you know where you own these insulators to look at these insulators or --

MR. GREENLEE: No, to look at any insulator.

CHAIRMAN STETKAR: Look at any insulator?

MR. GREENLEE: Yes, just to be able to see on like a 10-year basis or whatever to see if we can see a fault inside our insulators in critical applications.

MEMBER SCHULTZ: But is this something that develops? I thought it was something --

MR. GREENLEE: No.

MEMBER SCHULTZ: -- original manufacture?

MR. GREENLEE: No, it was original manufacturing, but what happens is because the insulators weakened as it kind of wobbles over the years, it will develop a crack and then it will

propagate.

Okay. This is the slide that's really probably of the most interest, because this is the one that tells you why we ended up going the direction that we went with the industry. The top presentation or the top information shows what really happened at Byron and what we call on a per-unit basis. And what that means is one per unit would be four kV. And so, when we had the event at Byron, what you see is the Alpha-Bravo phase was 100 percentage voltage.

The Charlie phase is the one that failed, and it caused about 60 percent voltage on the Bravo-Charlie and the Charlie-Alpha. And as luck would have it, unfortunately the under-voltage detection system is a two out of two and it was looking across the Alpha-Bravo phase. So it was okay. And the other phase that it was monitoring was not. So we only got a half-trip, in other words.

So what we thought when that first happened was, hey, what we need to do is we can go in and we can modify our under-voltage circuits to just sense all phases and then we'd be okay.

CHAIRMAN STETKAR: Until --

MR. MATHARU: Until we started looking at operating experience and we found the Beaver Valley

event. Thirty days Beaver Valley went without identifying they had an open phase, and it's because they were lightly loaded on the transformer and the operator saw 100 percent voltage on the other side of the transformer. So the only way to get that situation, at least when we first started down this road at Byron, was to get negative sequencing-type relaying into the plant in order to sense an open phase.

EPRI has done some pretty incredible work and we now have a much simpler solution, because I will tell you the Byron solution, if I could go back and do it again, I would put in the EPRI solution because the Byron solution is a programmable logic relay. It's a great relay. Highly, highly reliable. If it breaks, it won't do anything. It will stop. It will tell you, hey, I'm broken; come fix me, so that you don't get an inadvertent separation. But the algorithms and the analysis you have to go to make sure the grid modeling is correct, the transformer modeling is correct and that everything works so that you get this transfer over to the diesels under accident conditions is extremely complex.

So next. This is just a picture of the risk profile. We went back and Byron's probably a

bounding unit for the industry because one transformer feeds two safety buses. There are a number of other units in the industry that do that, but with that you impact two safety trains, which was the biggest issue facing the operators with no running safety equipment except for a diesel-driven aux feedwater pump.

So we went back and we said, okay, well, we didn't know about this vulnerability. If we plug that back into our PRA models, what would be the base CDF increase? And you can see there it's fairly substantial. Seven-and-a-half percent of the base CDF you would add in order to bound an open phase event without the operators knowing about it. And then if you train the operators, the middle bar shows you the decrease in risk, so you're down about 6E-7 or 1.5 percent of baseline once the operators can recognize, detect and separate from a faulted open phase circuit.

And then when you finally add on automatic detection, you put the situation basically back at the original baseline or E-8, so a very, very minor increase in risk once you get the new circuitry that we're going to put into the plants. And by the way, Byron is the only plant in the country now that is active. We activated that circuit last month, and so it's not only installed, it's out of its monitoring

mode. And if Byron has an open phase, that relay will separate from the faulted circuit.

MEMBER BLEY: You didn't have any hits during the run-in time, did you?

MR. GREENLEE: We did not. Have 20 years of operating experience on these relays. Lightning strikes, snow storms, open phase events, on switchyard out. And the relays see it, but they're modeled correctly and they're not falsely actuating.

CHAIRMAN STETKAR: Scott, you said -- just because of my line of questioning earlier, I think you said if the relay sees an open phase condition, it will separate. You don't have any coincidence logic with anything else? You're just --

MR. GREENLEE: We don't.

CHAIRMAN STETKAR: -- going to separate?

MR. GREENLEE: We don't. And the way our initiative is set up, it's a little more restrictive than what Singh said. Our initiative says if you have a transformer which feeds two safety buses, you need to be automatic because you're bordering on an event. You're losing all your safety equipment. What it says is if you have separate offsite feeds to your safety buses such that an open phase on one of the feeds will only impact one train of safety equipment, then you

can tie in the ESF logic such that it only has to be active if an ESF signal is present.

CHAIRMAN STETKAR: That's what I remembered from the Subcommittee meeting. I didn't realize that you were more restrictive on the single -- to more than one bus.

MR. GREENLEE: Yes, because the theory was you should never cause an event. And at plants where you feed both safety buses, you can cause an event without operator action. And then you have to be able to protect during accident conditions.

And just FYI, the time frame, once you throw the accident conditions in there, the time frame is pretty fast. At Byron and Braidwood we had dedicated operators, an extra person in the control room for a couple of years just dedicated to monitoring and getting off of offsite power in case we had an accident.

CHAIRMAN STETKAR: That's an interesting job.

(Laughter)

MR. GREENLEE: Yes, the operators were not very happy with it.

Okay. Next. Okay. Go ahead. Next. The Industry Open Phase Initiative. This initiative was

approved by all, unanimously approved last October by all chief nuclear officers, which makes it a mandatory initiative for the industry. So all of the nuclear plants in the country have to go and put this circuitry in. And we've kind of discussed some of the nuances, but we have to address the issue. Our initiative only applies to active safety feature plants. And we discussed previously, the passive plants, NRC is dealing with those one-off, so we didn't put that into this initiative.

Next. Okay. These are the key milestones. By the end of this year everybody has to have done the analysis and decided what they're going to do in order to solve the problem. And then we give them two years to go put the design changes into the plant and then an additional year of monitoring if they need the monitoring. And we put that in there because at the time we didn't have the EPRI solution. And the Byron-type solution you definitely want to do a good monitoring --

(Laughter)

MR. GREENLEE: And then of course we update the FSARs and the tech spec bases in conjunction with the initiative.

Next. Tech spec updates. This is just

sort of an FYI, but what we've landed on in the industry is we're going to update our bases to say that if the OPIS, or the system that senses an open phase is inoperable, then you would say your offsite power source is inoperable. And we linked it that way because if you go back to the GDC and you look at the single-failure criteria, once that system is inoperable, you no longer can meet the single-failure criterion depending on how you want to interpret the GDC.

Next. Industry actions. I won't go through all of these, but we've been as an industry very engaged in this issue since it started. INPO got involved early on. Wrote an EIR, a Level 2, requiring all licensees to go and tell INPO how they were going to fix open phase.

And let's see. I already talked about the approval of the initiative. The big one I want to mention is the third bullet up from the bottom. This is an international problem. So far we don't know of anybody worldwide who has open phase protection for their offsite power sources for safety purposes. We had a workshop in January in Paris to get the rest of the international community aligned and we expect that WANO will issue an SOER, a Significant Operating Event

Report, that will drive the whole world to do basically the same thing that the U.S. is doing.

Next. Okay. And I won't go through all of these either, but this just lists some of the different designs. We've had a number of utilities looking at various design solutions. The Exelon solution. Entergy has had a solution that they came up with. FENOC has been working with state estimator software. You know, the state estimator software is what we use to monitor overall grid performance and to alert operators if offsite power becomes inoperable. They thought that they could come up with some things where they use the state estimator to then detect an open phase. And we're going to talk in detail about the EPRI solution. And for my money I think the EPRI solution is one of the best we've found.

Next. Did well. Twenty minutes.

MEMBER SCHULTZ: Scot, you just mentioned the international activity, and the NRC staff mentioned the IAEA initiative for a safety guide, and also activities with IEEE for a standard. So what are the industry's activities associated with those?

MR. GREENLEE: We honestly have not been heavily involved in the IAEA, however, WANO does interface with them. And so I would be pretty sure

there would be an interface going on there. What will likely really happen is most of the regulators throughout the rest of the world will eventually get involved and you'll get stuff that will be considerably different depending on the regulator. The different regulators are going to respond differently.

MEMBER SCHULTZ: How about on the IEEE standard? Maybe a better time to discuss that is after the EPRI presentation, but is all of what you're doing the influencing?

MR. GREENLEE: I would say that's kind of a next step for us is to really -- now that we've gotten the letter from NRC, I think we have pretty good alignment. At least the regulatory I know knows the direction we're headed. Now we're really start worrying about the IEEE standard down the road.

MEMBER SCHULTZ: Thank you.

MEMBER BLEY: Okay.

MR. ARRITT: My name is Bob Arritt. I'm with EPRI. I'll give some background and talk a little bit how EPRI has been involved from the beginning and some of the work that we have done as far as addressing the open phase condition.

Okay, Gordon. EPRI has been involved

since the beginning, since what I'll call the beginning of the Byron event, and since the Byron event we've put out four publicly available documents with analysis. The first analysis was looking at transformer types similar to the one at the Byron event to get an understanding and try to come up with some detection method to determine an open phase. The second report we modeled an entire plant, looked at different loading scenarios, looked at different motor starting scenarios, all looking at defining a detection method for determining an open phase condition.

And from those two reports we saw that the real difficulty was detecting an open phase event during a low or no-load or moderately loading, as Scot was saying, because you don't have any voltage distortion. I'm going to give a little bit of background on that. But this is really makes this a unique problem to the station auxiliary transformers because the prevalent condition of these is they're sitting there unloaded or lightly loaded and in standby mode.

And we released to other reports after this. We did another study similar to the first report, but we looked at all the different transformer

configurations to determine which station auxiliary transformers out there had the issue of not translating the open phase event to a voltage condition. And we also looked at the double-open phase event which was talked about earlier.

Okay. We talked about this in the Subcommittee, but for those folks that weren't here, just to give you a little bit of an idea of what the problem is and why this is a unique problem in particular to the generators and the transformers in the switchyard, is that when you get this open phase condition under a light load or even under a moderately-loaded condition, what happens is is you get the voltage from the two phases that are still intact. They couple over to say a secondary delta or tertiary delta, or if you have a three-legged core, it's the same phenomena that occurs. And with that open phase the only solution to that closed loop is what that voltage would be, the exact magnitude and phase angle as if that phase was still intact. So you don't have the voltage distortion and there's essentially no load there to detect. So this makes it a very difficult condition to detect in particular at the low and no-load conditions.

MEMBER CORRADINI: What transformers would

have low or no load?

MR. ARRITT: Great question. I'll show you on the next slide.

MEMBER CORRADINI: It was a great question. I don't --

(Laughter)

MEMBER CORRADINI: -- understand half of what you're saying, so I'm just trying to keep up.

MR. ARRITT: Oh, okay.

CHAIRMAN STETKAR: Now you know how we deal when you and Sanjoy get going.

(Laughter)

MEMBER BLEY: But just for the non-double Es who weren't at the Subcommittee, you saw that zero sequence. That's a mathematical trick that was invented a long time ago to take an unbalanced system -- if it's a three-phase, you can represent it as three balanced systems and each of those is called a sequence. So there's a zero sequence, a negative sequence and a positive sequence. And those three balanced systems give you exactly the same conditions. So that's what that's about. If you're in balanced condition, you don't have the negative sequence or the zero sequence. You only have the positive sequence, yes. So it's a mathematical trick so that you can

analyze this stuff with some ease, a lot more ease than without it.

(Laughter)

MEMBER BLEY: And they're going to say you can detect it because of this, too.

MEMBER CORRADINI: That's wonderful. Thank you.

(Simultaneous speaking)

MEMBER RICCARDELLA: Next thing you know they're going to start talking about imaginary numbers.

(Laughter)

MR. GREENLEE: We actually know what -- a lot of the plants in the country, what we do is you take all of your loads and shift them over to what you call your unit auxiliary transformers. The generator feeds those. That way you don't have you to pay the offsite power company to bring power in all the time. So that transformer just sits there in a standby emergency mode.

MEMBER CORRADINI: That's the one that could be faulted and you would never know about it?

MR. GREENLEE: And you would never know it.

MEMBER CORRADINI: And I'm sorry, I'm

still back at the root cause sort of thing. And the fault is in your case the insulators because they were sitting there dangling in a certain physical configuration for years and years and years and wiggling around and eventually crack, crack, crack and bang?

MR. GREENLEE: Then the cables came down with --

MEMBER CORRADINI: The cables came down. Yes, that part I got.

MR. GREENLEE: Correct. But with an original manufacturing defect.

MEMBER CORRADINI: Right.

MR. GREENLEE: Otherwise the insulator would have been fine.

MEMBER CORRADINI: Thank you.

MR. ARRITT: And like I said, a good lead-in question for the next slide as far as the transformers that have this particular issue. You could see that the three transformers that I've highlighted below in red there are the ones that regenerate this voltage so you can't detect this unbalance under this light load/no-load case. And the ones above that are transformer types and core types where an open phase is translated to a low-voltage

condition. That's the reason the ones in white are the ones that you would see on a distribution system because of the protection issues associated with these particular types of transformers.

MEMBER CORRADINI: Okay.

MR. GREENLEE: And this is also why you'll see some of the industry is actually solving the problem by putting instrumentation on the four kV buses because they have a different transformer type that will translate the voltage to the buses.

MR. ARRITT: Okay. And with the part of our research that we did with the reports that we released was because we identified this issue detecting how difficult it is to detect his event under a no-load/light-load condition was that we looked at different detection methods that we looked at internally. One was voltage imbalance. And just like Scot just said, that's the reason under some transformer configurations you can us voltage imbalance, however, those transformers are susceptible. You can't use that because Scot showed in his presentation how there's very little voltage distortion, if any.

The sequence-current detection. Again, this is acceptable for loaded conditions, however, for

light, moderate and low conditions it's difficult.

Phase-current detection. This is something that we looked at obviously first, but there were a lot of issues that we saw as far as complexity of trying to determine backfeed with that.

And we also looked at power line carrier-type where we're actually sending signals down each individual conductor. And I'll get a little bit into that.

The issue with using a voltage imbalance we looked at. This here's a study that we did in the second report we released. This was here you're sitting here with an open phase condition and all your voltages are at one per unit. There's no imbalance. And then you go to start your 6,000-horsepower motor in this case and it's unable to come up to full speed and eventually drops out. And again, it's inherently unstable, too, because as soon as it drops out, all your voltages return to normal. So it takes some operator action to understand what's going on.

Okay, Gordon. The phase-current detection. This is the method we looked at first, but we saw issues with the complexity because you have to determine backfeed. In particular, if you have a high-impedance ground fault, that's comparable to your

magnetizing impedance, or in the case where at very high voltages parasitic capacitance is very comparable to what you magnetizing current would be, say in the case of a CVT, which is about 10 nanofarads, at 230 kV. That's about an order of what you'd have as a magnetizing current. So you would have to have some sort of current direction, and it's a very noisy environment and you're magnetizing current isn't predominantly 60 hertz. It's predominantly 180 hertz, which is a zero sequence-type current.

Okay. And then the PLC. This is one of the things that we looked at. The challenges that we saw with this you'd have to have one on each individual conductor coming in. And also you didn't have the 100 percent coverage because you can check it between the transmitter and the receiver, however, there's a gap between where that receiver is and where that transformer is. And that's an area that's vulnerable that you can have an open phase that you wouldn't be able to detect that.

Okay, Gordon. So the EPRI open phase detection. What we did was knowing that from the analysis that we performed that we took advantage of the known characteristics of the transformer and we exploited this by doing a detection method. We're

actually doing an active injection along with a detection on the neutral, the transformer, because this is monitoring the zero sequence network. And in essence what it's doing is is when you get an open phase, that neutral conductor becomes like your third current carrying conductor, if you have enough low current. However, if you don't have enough low current, you get a very high impedance state and it's very -- you can determine that by using some form of a signal injection where your monitoring the impedance of that transformer.

We proved this theory out in early 2013 in the laboratory. We provided a Webcast in November 2013. We did a field test. It was actually the first ever field test of an open phase, and we'll get into a little bit of that in the later slides. And we've released a technical document on this particular method, and I believe it's being made public, isn't it, for everyone to be able to view that? Yes.

Okay, Gordon. So essentially how this is working, when you're sitting there --

MEMBER BLEY: That's the one that was not yet published at our last meeting?

MR. ARRITT: Yes. Yes, and we're making that --

MEMBER BLEY: Okay.

MR. ARRITT: -- public. So essentially what you're doing is with the active current injection is you're sitting there and you're monitoring this transformer impedance continuously while it's sitting there unloaded, lightly-loaded or during loaded conditions. And what we're doing is we're monitoring that impedance network.

Go ahead. Next slide, Gordon. And when you get an open phase, you from a relatively low-enhancement network to a relatively high-impedance network with a very discernible change in that signal level and we're able to detect that. And we're also doing detection on the neutral too to look at load current and to give us a very robust and secure detection method.

Go ahead, Gordon. And this came up in the last presentation of what we were designed to detect. Any open phase, any phase open and solidly grounded. There aren't any blind spots. You have two phases open, two phases grounded. So we have full coverage without any blind spots in the coverage.

Okay, Gordon. And what we had done is that we married the active injection with the neutral detection that allows for a very robust secure

detection method. The prototype was fail-safe. It would tell you if a component failed in its design where if you need to you can make it redundant. Also, there's a system test button where you can go test all the components of your network while it's in service without having to take it out of service where you can test the CTs and the transducers and the controller.

And this met all our design criteria that we had going into the design. We wanted to design this with COTS equipment, commercial off-the-shelf equipment, to reduce the cost and lead times and to provide minimal maintenance and also to deal with the obsolescence issues that do come up from time to time. These are very common components in this detection.

MR. GREENLEE: And I think it's an important point to note that what he's saying you got to have two things -- it's got to sense two things in order to trigger, so you can't have a single failure inside this unit that gives you an inadvertent separation. And so, it's got positive confirmation.

MR. ARRITT: Right. Yes, Scot's talking about there's also a harmonic component that we're looking at harmonics along -- because you get a harmonic signature when you get this open phase event.

Okay, Gordon. One of the things that we

looked at is we knew this had to go into existing design, so we wanted to make it as less painful as possible to retrofit it and we're only utilizing the neutral conductor. There's benefits to that. You can put provisions in place to install it at your convenience and coordinate with your outages. The seismic concern is less since the cabinet is on the ground. And there's much less fault current contribution neutral than say the phase conductors. And also, you have less exposures to lightning and no impact to the terminals of the transformers.

And as I said earlier, this was the first ever open phase field test. This was conducted at TVA. I really appreciate TVA's efforts in this and to make this possible. It was the first ever intentional open phase test, I should say.

(Laughter)

MR. ARRITT: And this test was done with various plant loads. It was tested under no load and lightly-loaded, and we loaded it as much as we could and it was able to detect under all those scenarios. And the NRC staff was there. TVA personnel. Southern Company was there. INPO and several A&E firms.

And it was a successful detection and performed as predicted. And something I want to point

out too is because of the -- we're just monitoring a change and there's overlapping protection and plenty of design margin that the only information that we had going into this field test was the transformer name plate data. And from that we were able to set the settings accordingly and have a successful test.

And as Scot was saying, we also had passive at the no-load condition. We had the injection signal, but we also monitor the current signature when you get this event because you do have a change in your harmonic spectrum that's unique to this open phase event.

Okay, Gordon. And these are the steps that we went through. We constructed a prototype for field testing. We had the lab demonstration meeting. We chose a representative field test site at Bellefonte and we completed that field testing. And we have since then completed the commercial licensing to hand this over to a commercializer.

Questions?

CHAIRMAN STETKAR: Thank you very much. Any questions from the Committee?

MEMBER SCHULTZ: On the field demonstration you indicated, with some pleasure I'm sure, that the only information you had was the

transformer name plate data.

MR. ARRITT: Yes.

MEMBER SCHULTZ: You wanted to demonstrate that you could do it that way. Ordinarily what benefit -- would you do other testings so that you would determine more information that could be helpful to provide additional assurance of successful detection?

MR. ARRITT: The design to achieve in our detection method was to have plenty of margin, overlapping margin where you know approximately what the zero sequence impedance is of the transformer without having to have the test data sheet, something that's very difficult to get. And you can estimate basically what that is and give you a comfortable margin to feel assured that you can detect that open phase event.

MEMBER SCHULTZ: So you not only feel you could do it in this test case, but you can install it in the same way on other transformers and have the same results?

MR. ARRITT: Correct.

MEMBER SCHULTZ: Have a confident result?

MR. ARRITT: Correct.

MEMBER SCHULTZ: Thank you.

CHAIRMAN STETKAR: I think, for the lay people, that the problem is some of the other potential solutions you had to know a heck of a lot more about the transformers than you could because --

MR. ARRITT: It gets very challenging if you have to set absolute values at very low current levels because there are so many different things that can impact that, say an un-transposed line coming into your system. You want to be able to get above that margin to where you can feel comfortable.

MEMBER SKILLMAN: I have just a curiosity question. Will you detect SMD? Will that react?

MR. ARRITT: To SMD?

MEMBER SKILLMAN: Solar magnetic disturbance?

MR. ARRITT: That's a great question.

MEMBER SKILLMAN: The big transformers will.

MR. ARRITT: Yes.

MEMBER SKILLMAN: They'll talk to you.

MR. ARRITT: That's a great question. And I worked some on the geomagnetic disturbance project at EPRI, and as you know, the actual field path that it takes is through the ground and through the phase conductor. So what we have this is an actual project

to put GIC, geomagnetically-induced current sensors in this device to give you a monitoring. Because we already have the brains there anyway. We could put a transducer there and give that information at the switchyard and they can see a GIC -- a GMD event measuring those GIC currents in the device to give the switchyard operator the knowledge that, hey, this actual event is occurring.

MEMBER SKILLMAN: So I take it the answer is yes?

MR. ARRITT: Yes. Yes.

MR. JOHNSON: Yes, this is Wayne Johnson. Yes, we're planning -- that's a project we have on the table to do and we're hoping to come up with a proper transducer to be able to give us a head's up on that.

MEMBER SKILLMAN: Okay. Thank you. Do you think it would actuate?

MR. ARRITT: No, it won't actuate.

MEMBER SKILLMAN: It won't actuate.

(Simultaneous speaking)

MR. ARRITT: The learning would be sufficient. I mean, that's --

(Simultaneous speaking)

MR. ARRITT: -- the way it is on the big transformers. You're aware of it, but you're hoping

nothing is going to happen.

MEMBER SKILLMAN: Right.

MR. ARRITT: You know?

MEMBER SKILLMAN: Yes. Thanks. Thank you.

MR. JOHNSON: But that's something we did look at, yes.

MEMBER BLEY: Well, thank you. Can we get the line open? Is it open?

While we're waiting for that, are there any comments from anyone in the room?

MEMBER POWERS: I guess I have a question that this all provokes. This is kind of a surprise. And I'm wondering are there other surprises of this general nature with the electrical system out there that we're going to surprised at?

MR. GREENLEE: We don't think so.

(Laughter)

MR. GREENLEE: And I only say that because I've had a very, very large team of experts between the folks I've used at Exelon and the folks at EPRI looking every which way at this sort of stuff, and I think we've known this is not an unknown phenomenon because you can go back into old text books and find that it's just something that we didn't adequately

factor into the designs of the nuclear plants. But I don't know of anything else. I mean, we've had a lot of experts looking.

MEMBER POWERS: Not one of those we don't know what we don't know? You have unknown unknowns.

MEMBER SKILLMAN: To Dana's point, if we go back 10-15 years, we've taken off pressure switches, we've done -- created relaying for grounds on the big transformers. So this is one of a number of learnings that we've tumbled to mainly through operating experience. So we've done a whole lot of stuff, but as Dr. Powers says, there's probably something out there lurking that we're just not quite aware of right now, but it'll find us.

MR. ARRITT: Yes, open phase events, they happen on the distribution system, but however, you're normally loaded and you can easily detect that. Or you have a transformer that translates to an under-voltage condition. Just this is a very unique case to a standby generator sitting there that's able to recreate those voltages.

MEMBER SKILLMAN: Thank you.

CHAIRMAN STETKAR: Go ahead.

MR. COLAIANNI: Yes, this is Paul Colaianni, Duke Energy. And just to feed off of what

Scot and Bob were saying, early research did look at and acknowledge open phases, and what we found out is that, like Scot was saying, a lot of that knowledge got imbedded into the motor standards and other standards, so to the transformer design standards. Like some have the certain windings that reproduce the voltage on the secondary. So people knew about it and they took steps to engage in it, but like Bob was saying, the standby transformer is an example of where that's the piece that's sort of missing in this. Thank you.

CHAIRMAN STETKAR: Just an aside for Dana, the balance circuit analysis stuff that let's you deal with dates back to 1913, I think.

MEMBER POWERS: Yes, but you see what my concern is, that we keep getting surprises and whatnot. And we've recognized that problem in the corrosion area, but we have a similar kind of issue here where there lots of little niggly things that keep popping up at us. We need to have somebody start looking in the 1913 text books and see if they can't find things.

CHAIRMAN STETKAR: Most of the universities have gotten rid of their power engineering courses.

MEMBER POWERS: Oh, absolutely.

CHAIRMAN STETKAR: They're gone.

MEMBER POWERS: I saw a school putting out an advertisement for trying to attract students to its power engineering course and one of the things it noted was that it was one of the few schools that was offering the power engineering course.

MEMBER BLEY: We now hear that there are people on the bridge line. If anyone out there on the bridge line would like to make a comment, please identify yourself and make a comment.

MR. LEWIS: Marvin Lewis, member of the public.

MEMBER BLEY: Thank you, Marvin. Go ahead.

MR. LEWIS: May I comment now?

MEMBER BLEY: Go ahead.

MR. LEWIS: Yes, I'm very worried about what you're saying, but it does not limit it to just power engineering. We have a lot of mischief and -- well, take a look at the way we're listening up -- farming on this call. I mean, it sounds like a chicken farm. And it's very difficult to hear it.

And this is a surprise. And we're getting surprises throughout. Waste we're getting surprises.

Even from the courts. We're getting surprises from the casks, the storage casks. We're looking at a storage cask with a half-inch steel membrane as the outer shell that's open to metal fatigue and has never been looked at for metal fatigue. This is a surprise.

And so we've got a surprise with a Russian reactor going off somewhere in the Crimea and nobody knows about it. It isn't hitting the papers. And we're living in surprises. This is not what I want from nuclear plant. Thank you for allowing me my comment.

MEMBER BLEY: Thank you, Marvin. Is anyone else out there who would like to make a comment? Please go ahead.

MS. THOMAS: Yes, Ruth Thomas --

MEMBER BLEY: Yes, Ruth. Go ahead.

MS. THOMAS: -- with Environmentalists, Incorporated. And now I was on the first part of this call. Did it go into proprietary or something, because all of a sudden I wasn't on anymore.

MEMBER BLEY: No, there was a break for half an hour and then we started this session.

MS. THOMAS: Oh, because I noticed that you have a different subject, and it relates to transformers.

MEMBER BLEY: And actually I have some experience with General Electric transformers. I don't know if that's one of the ones that was on the list that has problems.

But you spoke about the Branch Technology Position, which I think was prepared by Exelon and NIE, or was it prepared by the Nuclear Regulatory Commission?

MEMBER BLEY: This session is on Branch Technical Position 8-9. Is that correct? And that was prepared by the NRC. If you have a comment, please provide it for us.

MS. THOMAS: Well, my comment is I'd like to have a hard copy sent to me. And is there -- should I give it to somebody now, or --

MEMBER BLEY: No, if you would call Christina Antonescu. And she will give you her phone number right now.

MS. THOMAS: Okay. Good.

MS. ANTONESCU: My phone number is 415-6792.

MEMBER BLEY: Area code 301.

MS. ANTONESCU: Three-zero-one.

MEMBER BLEY: Did you get that, Ruth?

MS. THOMAS: Six-seven -- what's the last

four numbers?

MS. ANTONESCU: (301) 415-6792.

MS. THOMAS: Okay. Thank you, Christina.

MEMBER BLEY: Okay. Thank you. Anyone else care to make a comment?

(No audible response)

MEMBER BLEY: Hearing none, I guess we can close the bridge line again. And, Mr. Chairman, it's back to you ten minutes --

MR. ISHOLASHARAH: -- from NextEra Energy.

MEMBER BLEY: Please say your name again.

MR. ISHOLASHARAH: Iyodeli Isholasharah from NextEra Energy, St. Lucie Power Plant.

MEMBER BLEY: Please go ahead.

MR. ISHOLASHARAH: My question: On page 4 of the letter, the bullet No. 4, states that tech specs are the last requirement and limiting from the operations by equipment used for mitigation of OPC should be consistent with the probability requirements specified in the tech spec.

So my question is I want to assume that we do not need any lab submission to implement the open phase inspection teams.

MEMBER BLEY: We're not really open for questions now. We're open for comments. If you'd

contact the staff, I think they can help you with the requirements.

MR. ISHOLASHARAH: Well, this is in response to Matharu's presentation.

CHAIRMAN STETKAR: That's true, but we're the Advisory Committee on Reactor Safeguards and we not answer questions to the NRC staff. We'll entertain comments and indeed our transcript from this meeting will note your question, but we don't enter into those types of discussions.

MR. ISHOLASHARAH: Thank you.

CHAIRMAN STETKAR: Thank you.

MEMBER BLEY: You're welcome. Any further comments on the bridge line?

(No audible response)

MEMBER BLEY: Going, going, gone. Back to you, Mr. Chairman, 10 minutes early.

CHAIRMAN STETKAR: Well, thank you, Dr. Bley. Thanks very much. For those of us electrically- oriented, it was a really good presentation. The rest of you can learn.

CHAIRMAN STETKAR: We are off the record for today. Let's reconvene at 5:00.

(Whereupon, the above-entitled matter went off the record at 4:51 p.m.)

U.S.NRC
United States Nuclear Regulatory Commission
Protecting People and the Environment

Mitigation of Beyond-Design-Basis Events (MBDBE) Proposed Rulemaking

Advisory Committee on Reactor Safeguards

Fukushima Full Committee

December 4, 2014

Purpose

- Provide the ACRS full committee with an overview of the draft proposed rule language
- Focus on central/key requirements in paragraphs (b), (c), and (d) and the connection to NTTF 2.1
- Provide reaming portions of the presentation for information (not to be presented – due to limited time)

Background

- Consolidation of post-Fukushima regulatory efforts:
  - COMSECY-13-0002: Consolidates 4 and 7 into SBOMS rulemaking
  - COMSECY-13-0010: Consolidates EP-related with EA-12-049 implementation
  - SECY-14-0046 enclosure 6: Consolidates SBOMS and Onsite Emergency Response capability rulemakings
- Scope of proposed rulemaking as it relates to originating Near-Term Task Force (NTTF) recommendation:
  - All of recommendations 4, 7, and 8
  - All of 9.1, 9.2. and 9.3 – except long term Emergency Response Data System(ERDS)
  - !0. 2 (command and control/decision maker qualifications) and 11.1 (delivery of equipment to site - phase 3 portion of EA-12-049)
  - Includes NTTF 9.4 (ERDS modernization)
- In terms of post-Fukushima already underway:
  - Makes generically-applicable EA-12-049 and EA-12-051
  - Addresses staffing and communications 10 CFR 50.54(f) request
  - May also address feedback from NTTF 2.1 (flooding)

Proposed Rule Language

Paragraph (a) - Applicability

- Applicability
  - Current operating reactors
  - New reactors
  - Decommissioning reactors
- All requirements apply to both current and new reactor licensees and applicants
  - Additionally: New reactors have an additional assessment requirement (forward fit)
- Decommissioning provisions:
  - Once fuel is permanently removed from the reactor , no reactor requirements
  - Once irradiated fuel is removed from the spent fuel pool, all requirements cease

Proposed Rule Language

Paragraph (b) – Integrated Response

- Integrated Accident Response Capability to develop, implement, and maintain an accident response capability that includes:
  - Beyond-design-basis external event mitigation
    - Would make EA-12-049 generically applicable
    - Formerly referred to as SBOMS (industry's "FLEX" program)
  - Extensive Damage Mitigation Guidelines (EDMGs)
    - Would move § 50.54(hh)(2) requirements to this rule
    - No substantive changes to requirements
  - Severe Accident Management Guidelines (SAMGs)
    - Currently voluntary
    - Regulation would require SAMGs
    - No additional equipment requirements

Proposed Rule Language

Paragraph (b) – Integrated Response

United States Nuclear Regulatory Commission
Protecting People and the Environment

- Integrate with Emergency Operating Procedures(EOPs)
  - Would not revisit any 1980s EOP work or requirements
- Supporting staffing and command and control
  - Both staffing and command and control should be in place after EA-12-049
  - Recognizes challenge of a site-wide event that could lead to core damage and involve offsite assistance

Proposed Rule Language

Paragraph (c) – Equipment Requirements

- Functional capability and capacity of proposed (b)(1) mitigation strategies equipment
- Reasonable protection requirements for proposed (b)(1) mitigation strategies equipment
  - Protect against external events including any reevaluate hazards (Note – revised since subcommittee meeting)
- Maintenance requirement for proposed (b)(1) mitigation strategies equipment
- Spent fuel pool level wide range instrumentation requirement
- Proposed requirements would:
  - Make EA-12-049 and EA-12-051 equipment requirements generically applicable
  - Language reflecting NTTF 2.1 re-evaluated hazards is offered (pending Commission direction on associated COMSECY)

Proposed Rule Language

Paragraph (d) – New Reactor Requirements

- Assessment requirements:
  - Only applies to applicants listed in paragraph (a)(4)
  - Would require a design-specific assessment of the effects of an extended loss of all ac power concurrent with a loss of normal access to the ultimate heat sink
  - Based on the results of the assessment, the applicant would incorporate into the design those features that:
    - Minimize reliance on human actions
    - Enhance coping durations
    - Demonstrate ability to maintain or restore core cooling, containment, and spent fuel pool cooling capabilities
- Intent:
  - Implement the Commission's advanced reactor policy statement
    - "…longer time constants and sufficient instrumentation to allow for more diagnosis and management before reaching safety systems challenge or exposure of vital equipment to adverse conditions."
    - "simplified safety systems that, where possible, reduce required operator actions"
  - New reactors would be better able to address effects of extended loss of ac power

Proposed Rule Language

Paragraph (e) – Training Requirements

- Training
  - Training of personnel for activities not already addressed in current regulations or as a result of the recent orders
  - Systems approach to training
  - Expect most training already addressed as part of EOPs and EA-12-049 implementation
  - New training should be focused in the SAMG area
    - Identify new job tasks required
    - Develop training for new tasks
    - Complete training

Proposed Rule Language

Paragraph (f) Drills and Exercises
Paragraph (g) – Change Control

- Drills provide assurance that guideline sets are integrated and can be used
  - Initial drill(s) to show use and transitions
  - Follow-on drill(s) to provide assurance of continuing capability
  - Complex drill schedule: Initial drill within 2 refueling outages (RFs) and follow-on in 8 calendar years
  - Current operating licensees/holder of combined license (COL) after 52.103(g) finding:
    - 1st drill within 2 RFs – after that 8 year period
  - Applicants for a part 50 operating license (OL) or holder of COL before 52.103(g) finding:
    - Demonstrate use and transitions – initial drill(s)
    - Subsequent drills - 8 year period
- MBDBE Change Control
  - Facility changes can impact multiple regulatory areas; all change controls must be applied
  - No threshold criterion; must comply with requirements

Proposed Rule Language

Appendix E, Application, Implementation

- New Appendix E requirements
  - Multi-source term requirements are incorporated directly into current Appendix E
  - New Section VII requirement for staffing and communications
  - Technology-neutral ERDS
- Application requirements
  - Submittal information to support part 50 and part 52 applications for new reactors
- Implementation: Compliance dates, will use the Cumulative Effects of Regulation (CER) process to inform establishment of dates
  - Change control
  - Training
  - Command and control, staffing
  - SAMGs
  - Guideline integration
  - Equipment requirements
  - Multi-source dose assessment

Backfit Considerations

- The MBDBE rule has different supporting backfit bases:
  - Proposed rule requirements are severable
  - EA-12-049 and EA-12-051 requirements are <u>not</u> backfits
  - All other requirements need justification under Part 50 backfitting provisions (operating reactors) and Part 52 issue finality provisions (new reactors) are “forward fits”
    - Items supporting EA-12-049 are technically backfits without impact
    - SAMGs and supporting requirements (drills and training that involve SAMGs)
    - Multi-source dose assessment (voluntarily implemented): Is a backfit but should not cause additional impact
    - New reactors requirements (forward fit)
    - Technology-neutral Emergency Response Data System (ERDS) remove specification of technology, no backfit

SAMGs Backfit

- Qualitative basis for imposing SAMG requirements:
  - Guideline set used by operators and decision-makers following onset of core damage
  - SAMGs support making optimal decisions concerning containment
  - SAMGs support informing the emergency response organization with regard to protective actions (e.g., fission product barrier integrity)
  - The value of SAMGs, pre-planned guidelines for best use of all available resources to mitigate the accident
- Quantitative analysis: drawing conclusions from recent Mark I and II CPRR effort
  - Measuring the benefit to public safety of strategies for Mark I and II plants implemented after core damage – "SAMGs" for Mark I and II
  - Quantitative results: High level conservative estimate is over an order of magnitude below the Quantitative Health Objectives (QHOs)
- Staff is proposing that Commission issue proposed MBDBE rule for comment with SAMGs as requirements
  - Allow stakeholder feedback to inform final decision

Draft Regulatory Guidance

- DG-1301 "Flexible Mitigation Strategies for Beyond-Design-Basis External Events"
  - Current draft guidance endorses NEI 12-06 rev 0 with clarifications
  - NEI is revising NEI 12-06 to reflect feedback and lessons-learned from implementation of EA-12-049 to develop rev 1
  - Include guidance for new reactors assessments (paragraph (d))
- DG-1317 "Reliable Spent Fuel Pool Instrumentation"
  - Would endorse NEI 12-02 with exceptions and clarifications
- DG-1319 "Enhanced Emergency Response Capabilities for Beyond-Design-Basis Events"
  - Would endorse NEI 12-01 and NEI 13-06
  - Considering endorsement of NEI 14-01
    - Not an endorsement of Owners Group SAGs

Status and Path Forward

- Current focus:
  - Completing the proposed rule package
- Future ACRS interactions
  - Full committee – TBD (final rule)

NEI 12-06 Integrated Assessment

Joseph Pollock
NEI Vice President Nuclear Operations

ACRS Committee Meeting
December 4, 2014

NEI 12-06 Integrated Assessment

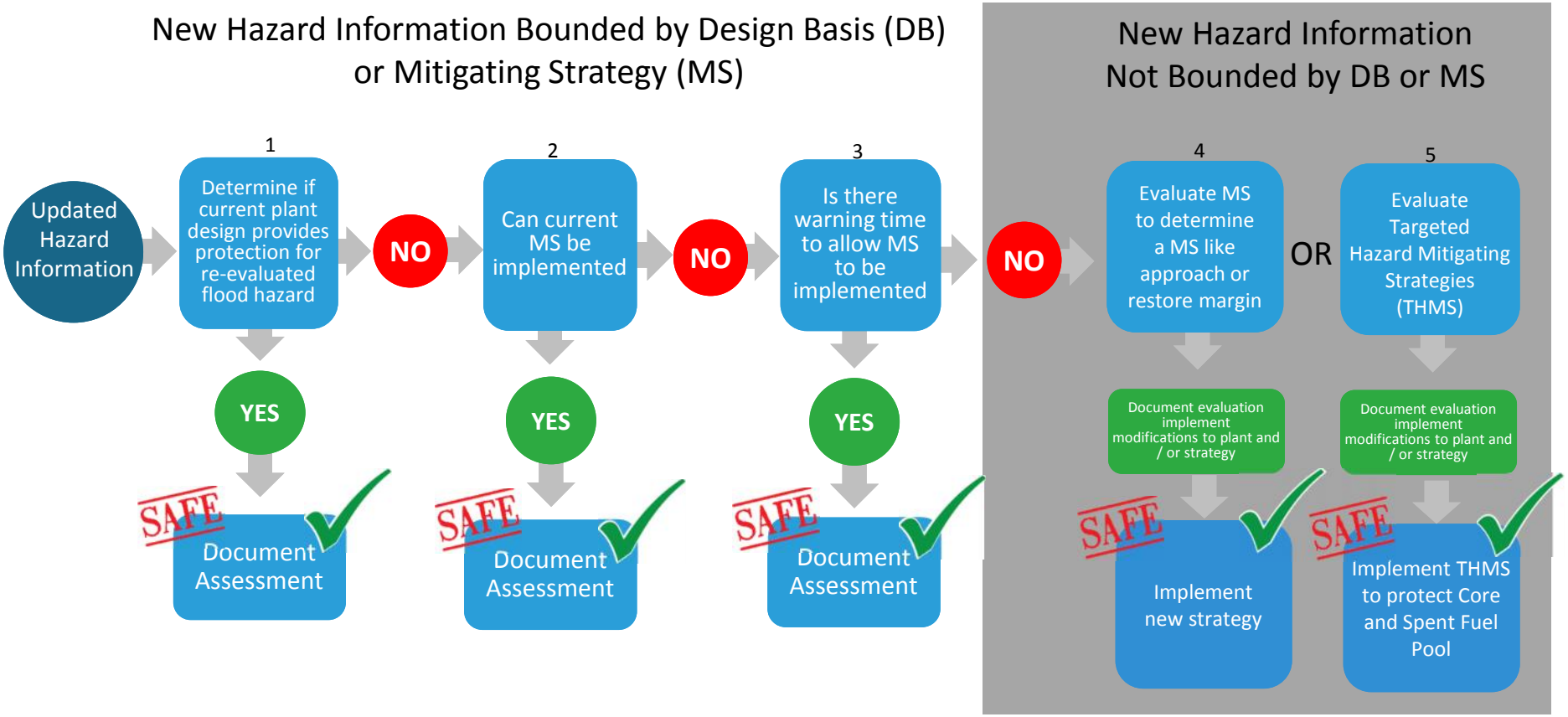

NEI 12-06 Integrated Assessment

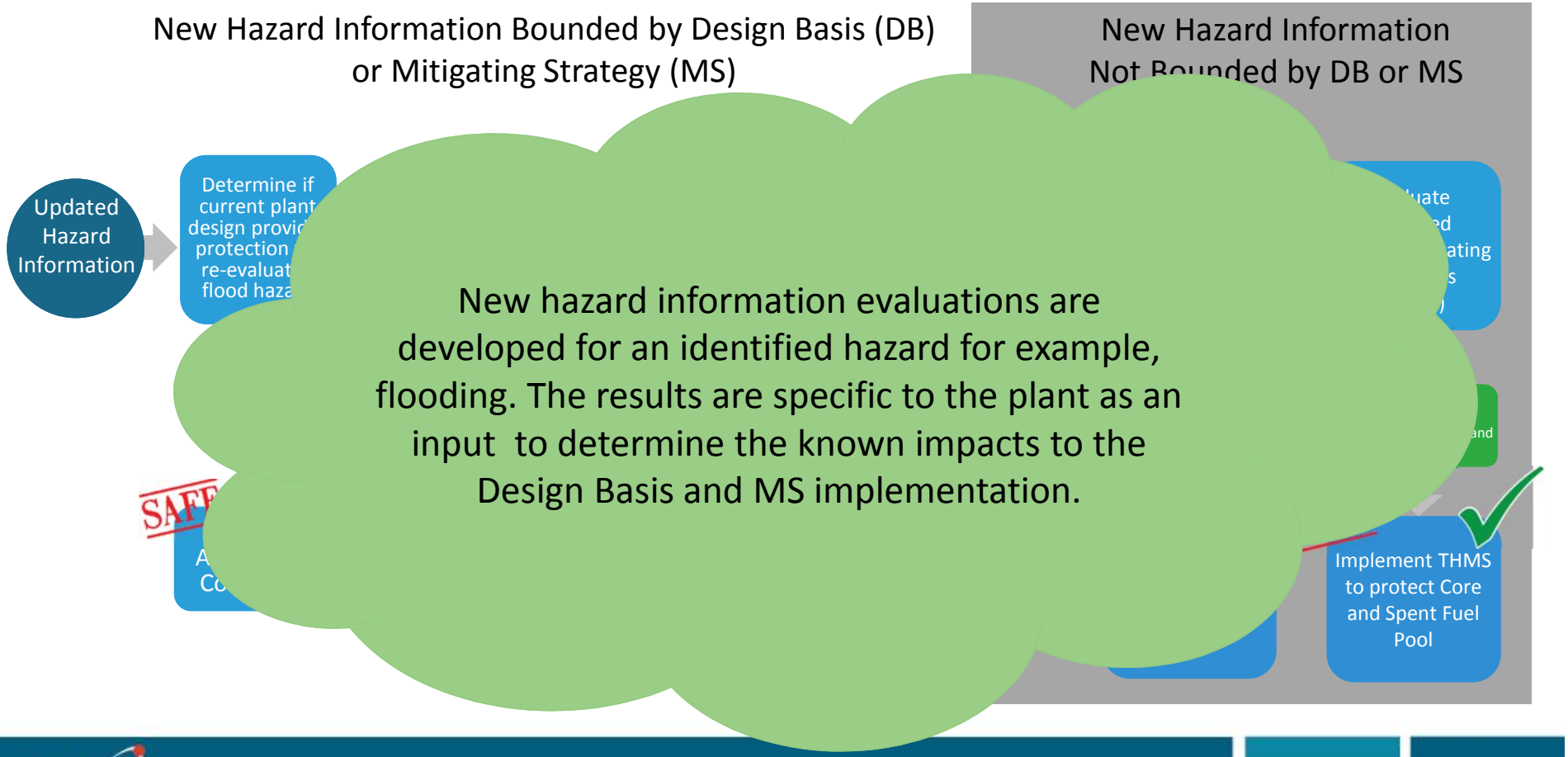

NEI 12-06 Integrated Assessment

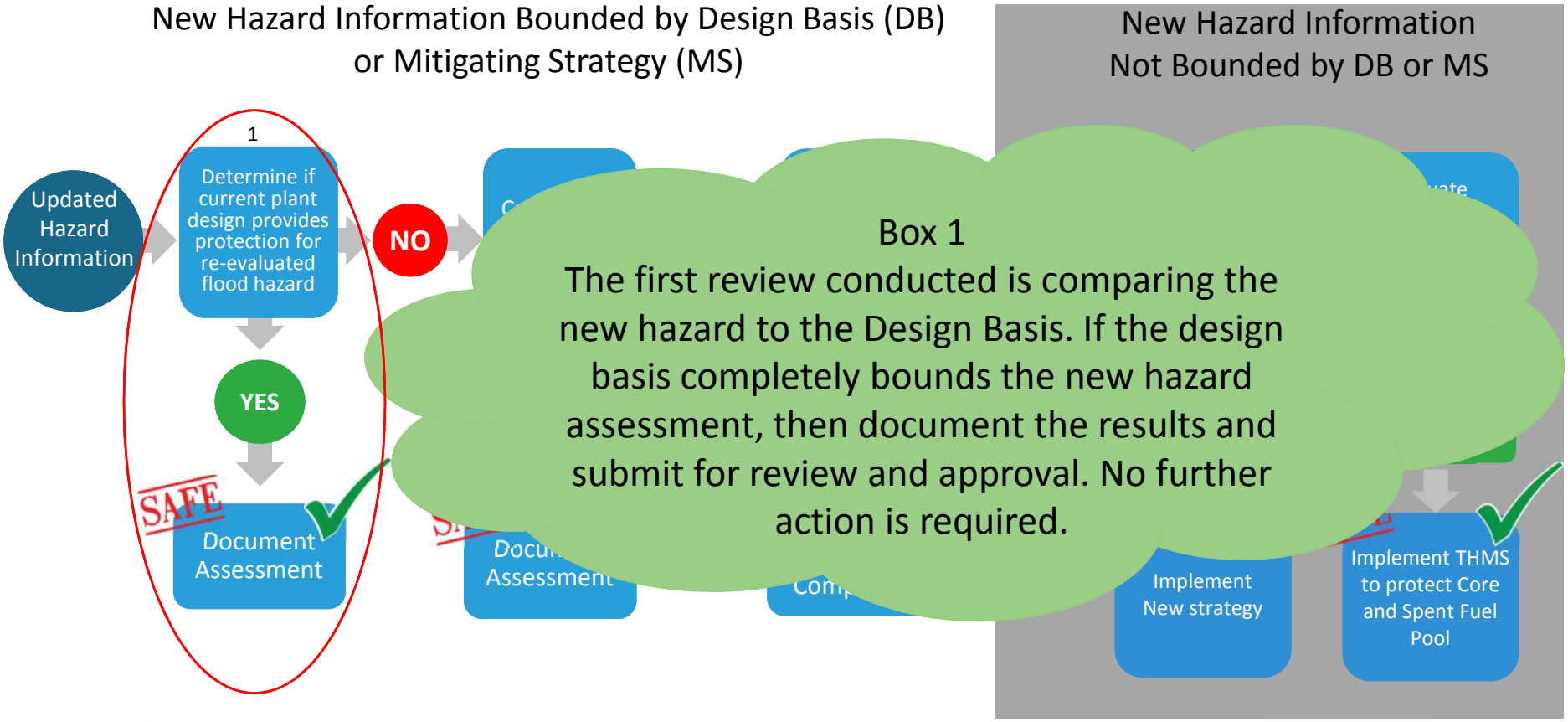

Box 1
The first review conducted is comparing the new hazard to the Design Basis. If the design basis completely bounds the new hazard assessment, then document the results and submit for review and approval. No further action is required.

NEI 12-06 Integrated Assessment

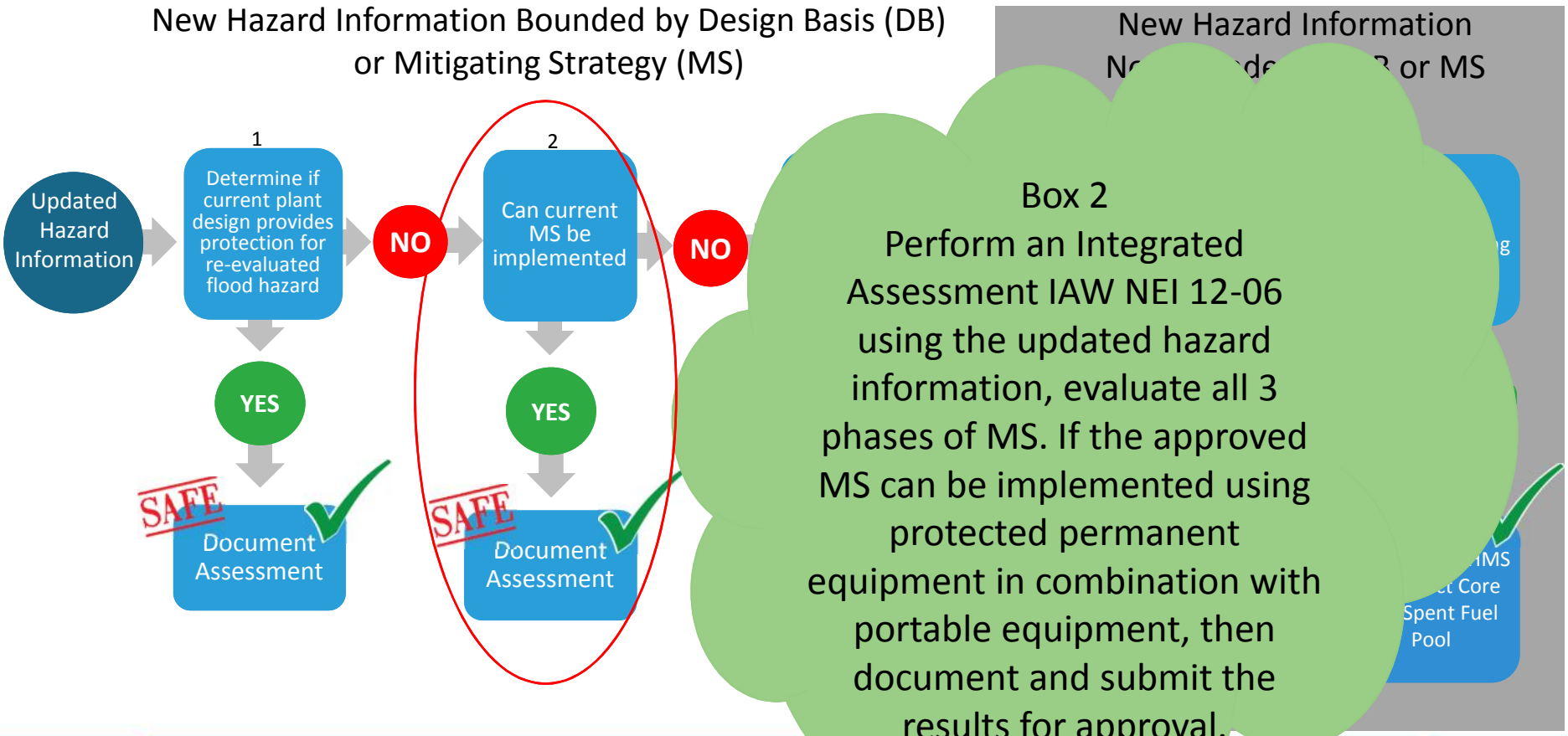

Box 2
Perform an Integrated Assessment IAW NEI 12-06 using the updated hazard information, evaluate all 3 phases of MS. If the approved MS can be implemented using protected permanent equipment in combination with portable equipment, then document and submit the results for approval.

NEI 12-06 Integrated Assessment

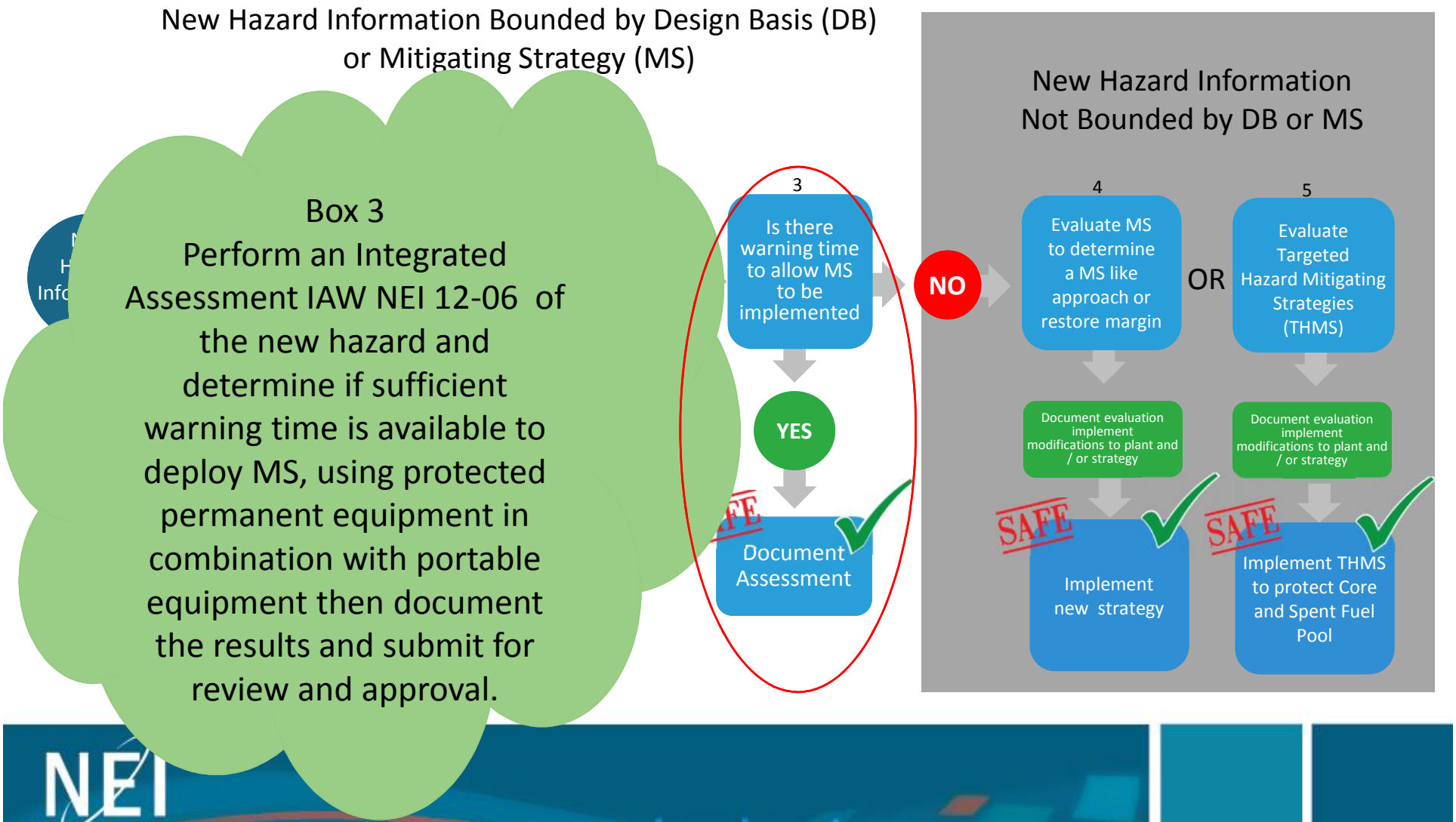

NEI 12-06 Integrated Assessment

Box 4

If MS cannot be implemented due to the new hazard impact then determine modifications required to protect plant and/or develop new mitigating strategy guidance to ensure continuity of key safety functions identified in NEI 12-06 to address the specific hazard. Perform an integrated assessment of the resulting configuration IAW NEI 12-06. If the new or revised MS can be implemented, then implement and document the results. Submit for review and approval.

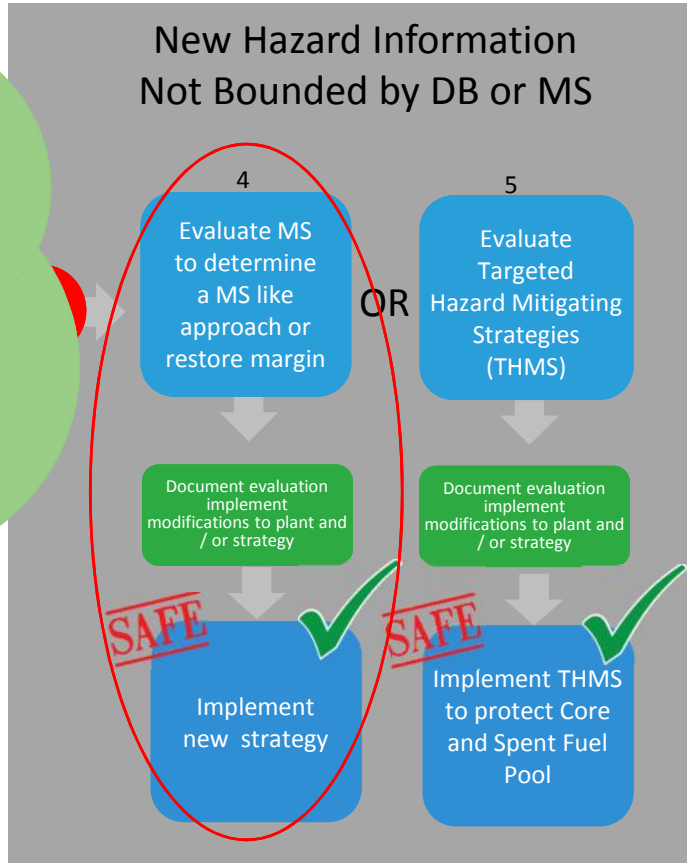

NEI 12-06 Integrated Assessment

Box 5

If the new hazard cannot be mitigated with phase 1 installed equipment, then a THMS approach to protect the core and spent fuel pool needs to be developed. The THMS will apply the new hazard information to develop a response specific to the hazard. This THMS approach must continue to function throughout the event until recovery actions are initiated. Perform an integrated assessment of the resulting configuration. If the new or revised MS can be implemented, complete necessary changes, and document the results. Submit for review and approval.

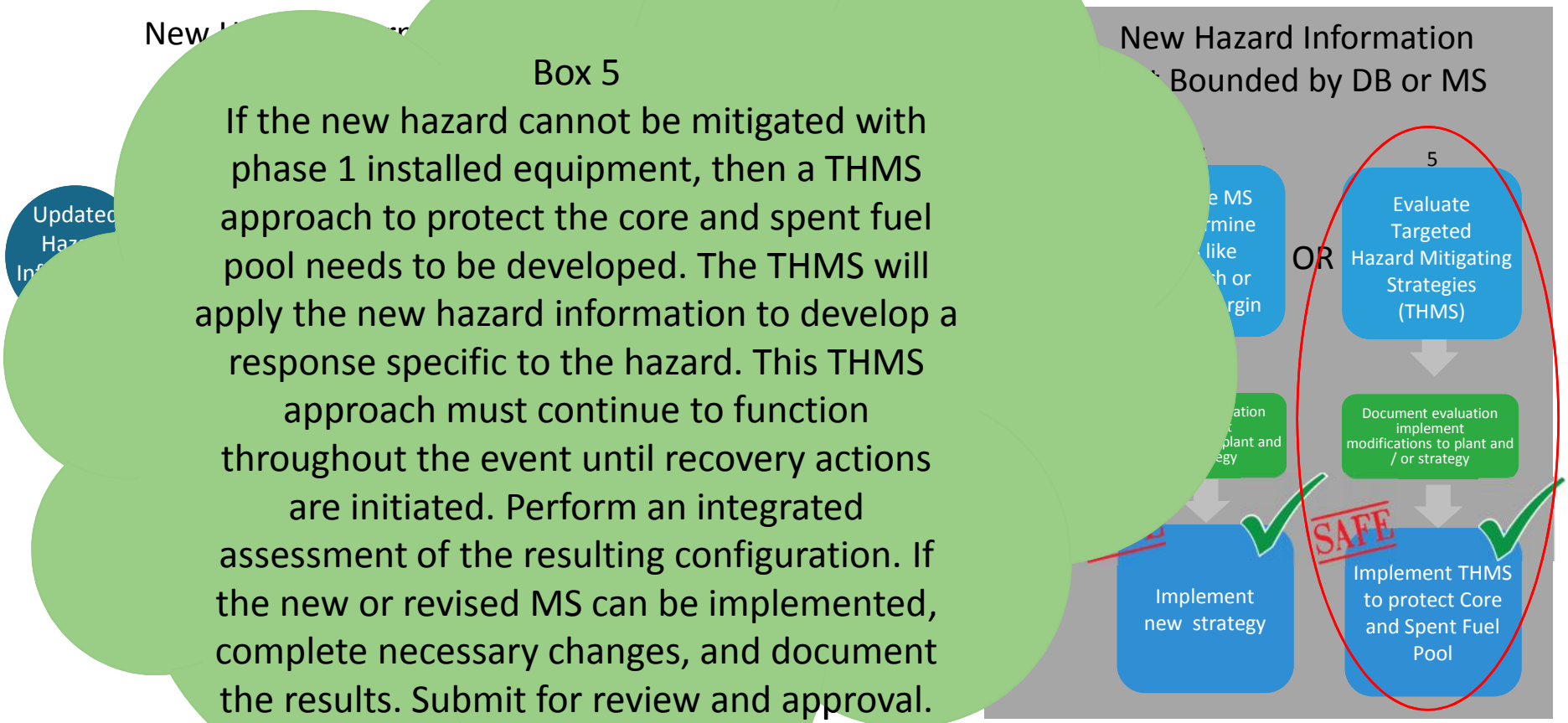

NEI 12-06 Integrated Assessment

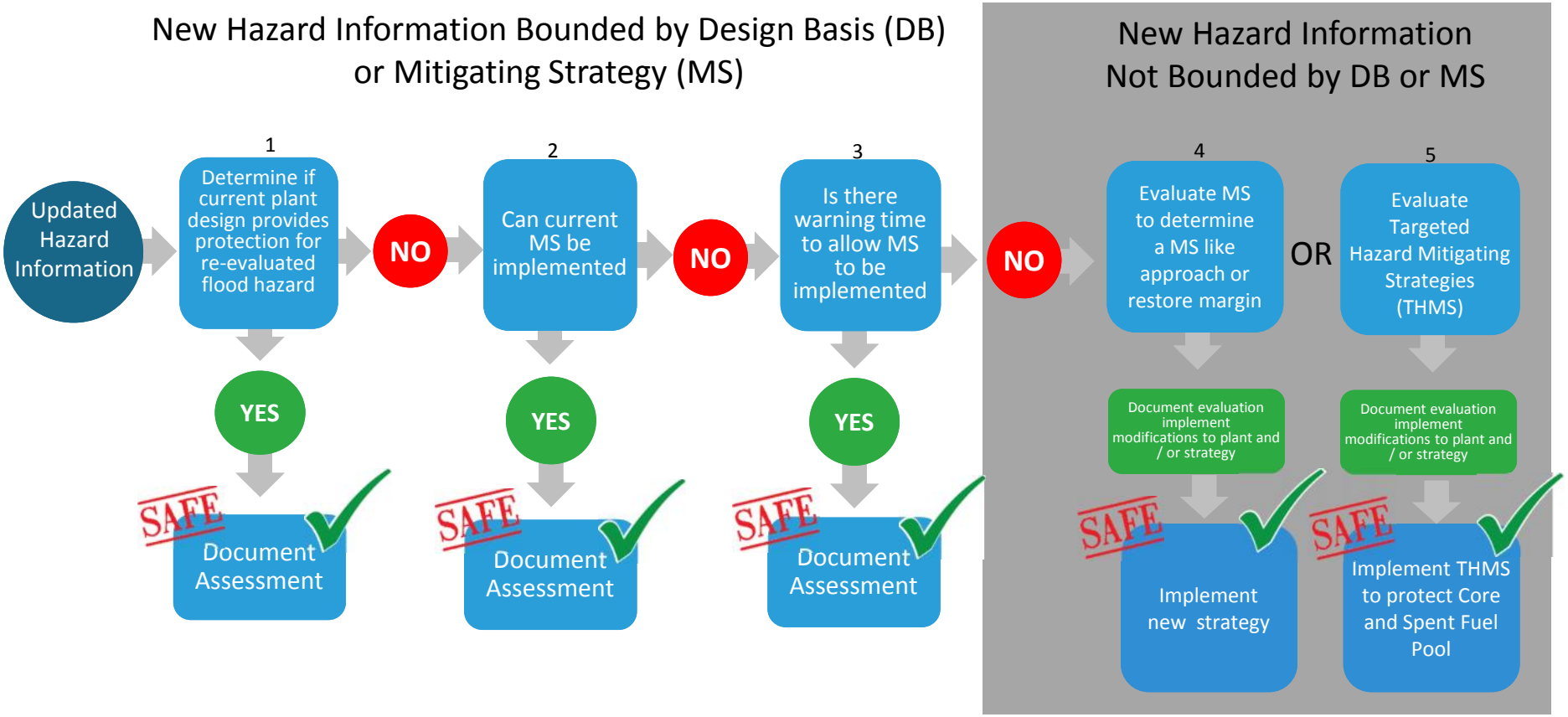

NEI 12-06 Integrated Assessment Example

Scott Bauer, NEI
Bill Webster, Dominion
ACRS Meeting
December 4, 2014

NEI 12-06 IA Example

FLEX

- Undefined hazard
- Established event conditions (ELAP)
- Developed mitigating strategies for those conditions

Reevaluated Flood Hazard

- Defined hazards
- Known conditions (not necessarily an ELAP)
- Develop specific mitigating strategies for known conditions

Plant Example Background

- Reevaluation performed and LIP (29 inches in 6 hours) exceeds what was considered in DB
- Preliminary flood hazard assessment performed to determine impact on mitigating strategies
- Determined that flooding would impact multiple areas

Example NEI 12-06 Integrated Assessment

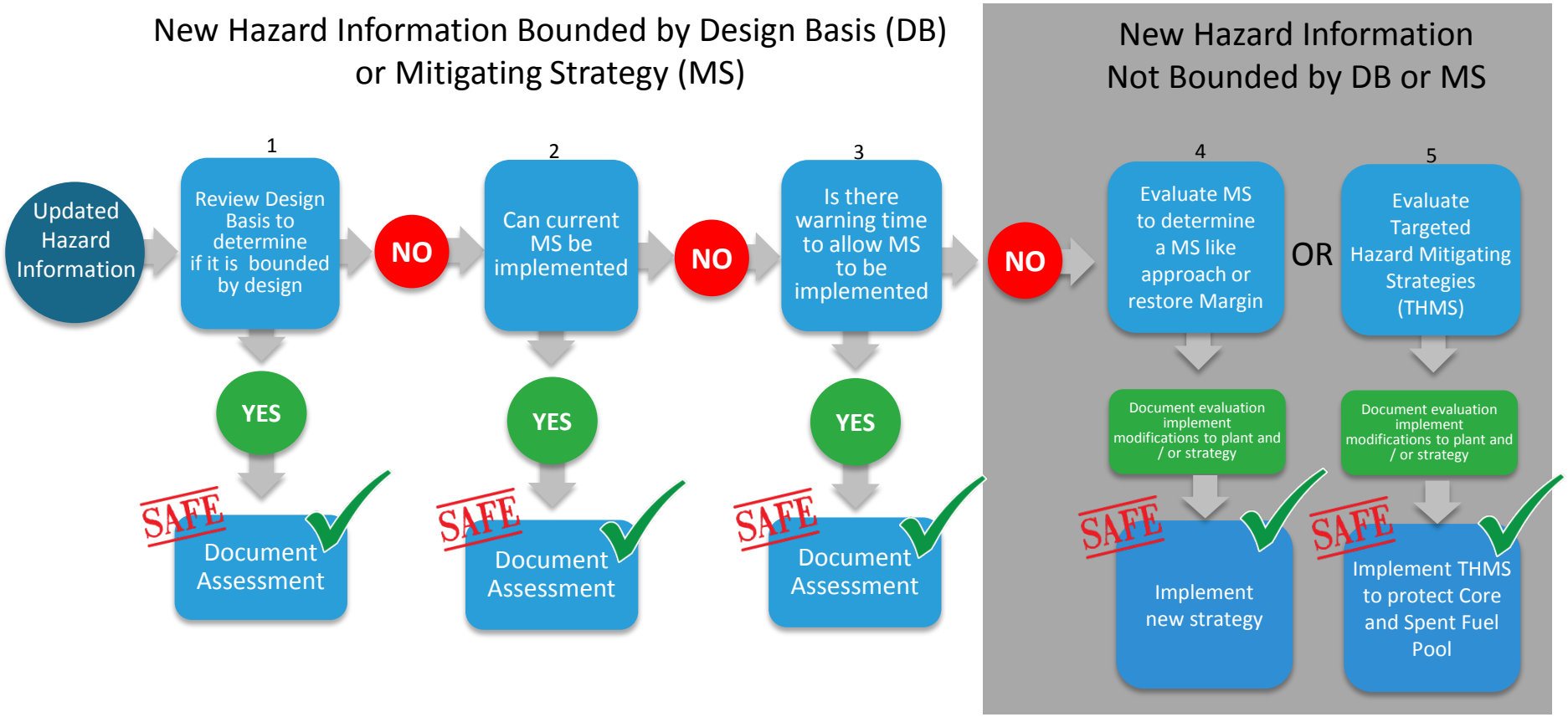

NEI 12-06 Integrated Assessment Example

- Plant is in Block 4- Evaluate mitigating strategy
- The flood reevaluation mitigating strategy will be to protect the FLEX capability
- The flooding MS will enable the plant to answer Yes to block 2 or 3 depending on the extent of the flooding MS modifications and actions

NEI 12-06 Integrated Assessment Example

- Objective- to maintain or restore key safety functions through:
  - Protection of the plant, and/or
  - Diverse and flexible mitigating strategies
- Determining the flooding MS modifications and actions
  - Determine the sequence of events (timing of water level accumulation on site and sequence of mitigating actions)
  - Determine what equipment needed for key safety functions is impacted by the event

NEI 12-06 Integrated Assessment Example

- Determining the flooding MS modifications and actions (continued)
  - Determine what modifications or strategies were needed to protect that equipment and the capability to implement FLEX strategies
    - Also identified other simple modifications/actions to protect other equipment that provides greater diversity

NEI 12-06 Integrated Assessment Example

- Additional mitigating strategy modifications or actions needed:
  - Install portable flood dikes around doorways
  - Use installed sump pump capability to keep water out of the key areas (available because ELAP not assumed for this defined event)
    - 3 pumps available
    - Pumps have two power sources above flood height
    - Pumps are submersible
    - Use FLEX pump as backup

NEI 12-06 Integrated Assessment Example

- Additional mitigating strategy modifications or actions needed (continued):
  - Modify abnormal operating procedures to integrate with new mitigating strategy procedures
  - Develop procedure for new mitigating strategy
  - Conduct training on new procedures and strategy
  - Validate strategy per FLEX validation guidance

NEI 12-06 Integrated Assessment Example

- Additional mitigating strategy modifications or actions needed (continued):
  - Roof modifications to keep water from entering buildings
  - Added operator actions to close doors, etc. to minimize water intrusion
  - Review existing maintenance requirements for new MS equipment
  - Reevaluate deployment routes for onsite FLEX equipment

United States Nuclear Regulatory Commission

Protecting People and the Environment

Advisory Committee on Reactor Safeguards

COMSECY-14-0037, "Integration of Mitigating Strategies for Beyond-Design-Basis External Events and Flooding Reevaluations"

ADAMS Package ML14309A256

December 4, 2014

Japan Lessons Learned

- Contents
  - Background
  - Discussions
    - Proposed Path for MBDBE Rulemaking
    - Evaluation of Requirements Beyond MBDBE Rulemaking
  - Recommendations
  - Enclosures
    1) Background (Design-Basis Events, Design Basis)
    2) Coordination and Clarification
    3) Non-Concurrence Package NCP-2014-010
    4) Non-Concurrence Package NCP-2014-011

Proposed Path for MBDBE

- Mitigating Strategies Address Evaluated Flooding Hazards
  - Implement under adequate protection provisions used for Order EA-12-0049
  - Mitigating strategies would need to respond to and be protected against reevaluated flooding hazards
  - Timing would help determine requirements for installed equipment
  - Possible use of scenario-specific strategies

Evaluation of Requirements Beyond MBDBE Rulemaking

- Assess need for additional information, assessments, and potential plant-specific backfits based on reevaluated hazards, event frequencies, response times, licensing history, and other available information
- Follow established process
- Will consider benefits from requirements for mitigating strategies
- Document disposition of evaluation
- Complicated by state of probabilistic flood hazard analysis and related research plan

U.S.NRC
United States Nuclear Regulatory Commission
Protecting People and the Environment

Recommendations

Recommend the Commission affirm:

1) Mitigating Strategies need to address reevaluated flooding hazards
2) Targeted or scenario-specific strategies may be needed for some scenarios that could significantly damage a site
3) Flooding assessments and decision-making to be integrated into the development and implementation of mitigating strategies

U.S.NRC
United States Nuclear Regulatory Commission
Protecting People and the Environment

Integrated Assessments

- Reevaluation of flooding hazards
- Assess vulnerabilities (challenges to SSCs important to safety)
- Identify possible protection and/or mitigation measures
  - Not necessarily relying on mitigation strategies from Order EA-12-049 and MBDBE rulemaking
- Phase 2 decision-making on possible regulatory actions based on information and assessments from request for information

U.S.NRC
United States Nuclear Regulatory Commission
Protecting People and the Environment

COMSECY Approach

- Develop flexible, all-hazard mitigating strategies (Order EA-12-049)
- Reevaluation of flooding hazards
- Require success path to address reevaluated flooding hazard in MBDBE rulemaking
- Licensees develop and implement; NRC reviews and inspects for regulatory compliance
- Evaluate potential need for more information and plant-specific backfit
  - Where warranted, pursue with appropriate assessment process and regulatory actions
  - Consider with longer-term development of probabilistic flood hazard analysis and related research plan

Current Paths

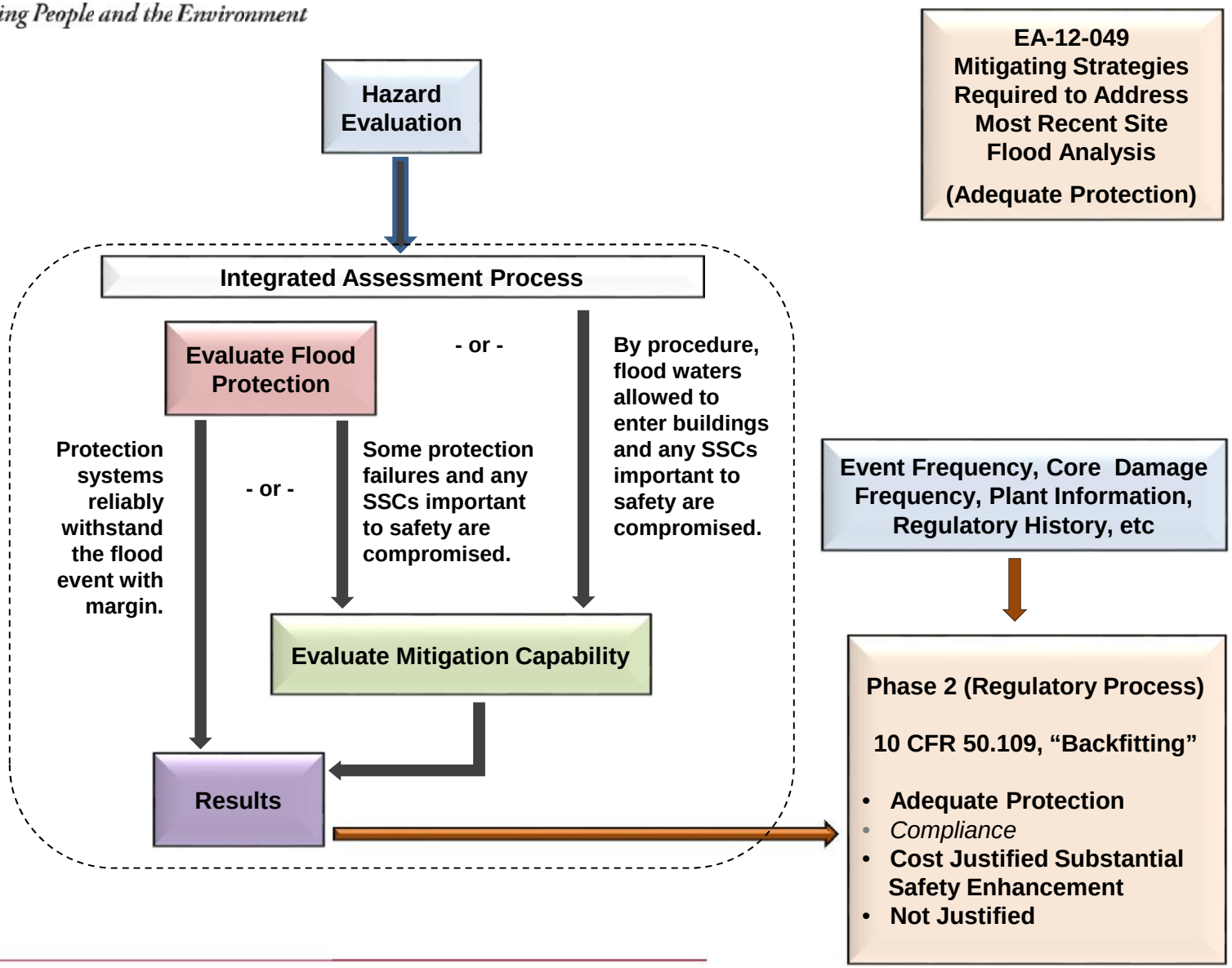

Revise Only Mitigating Strategies

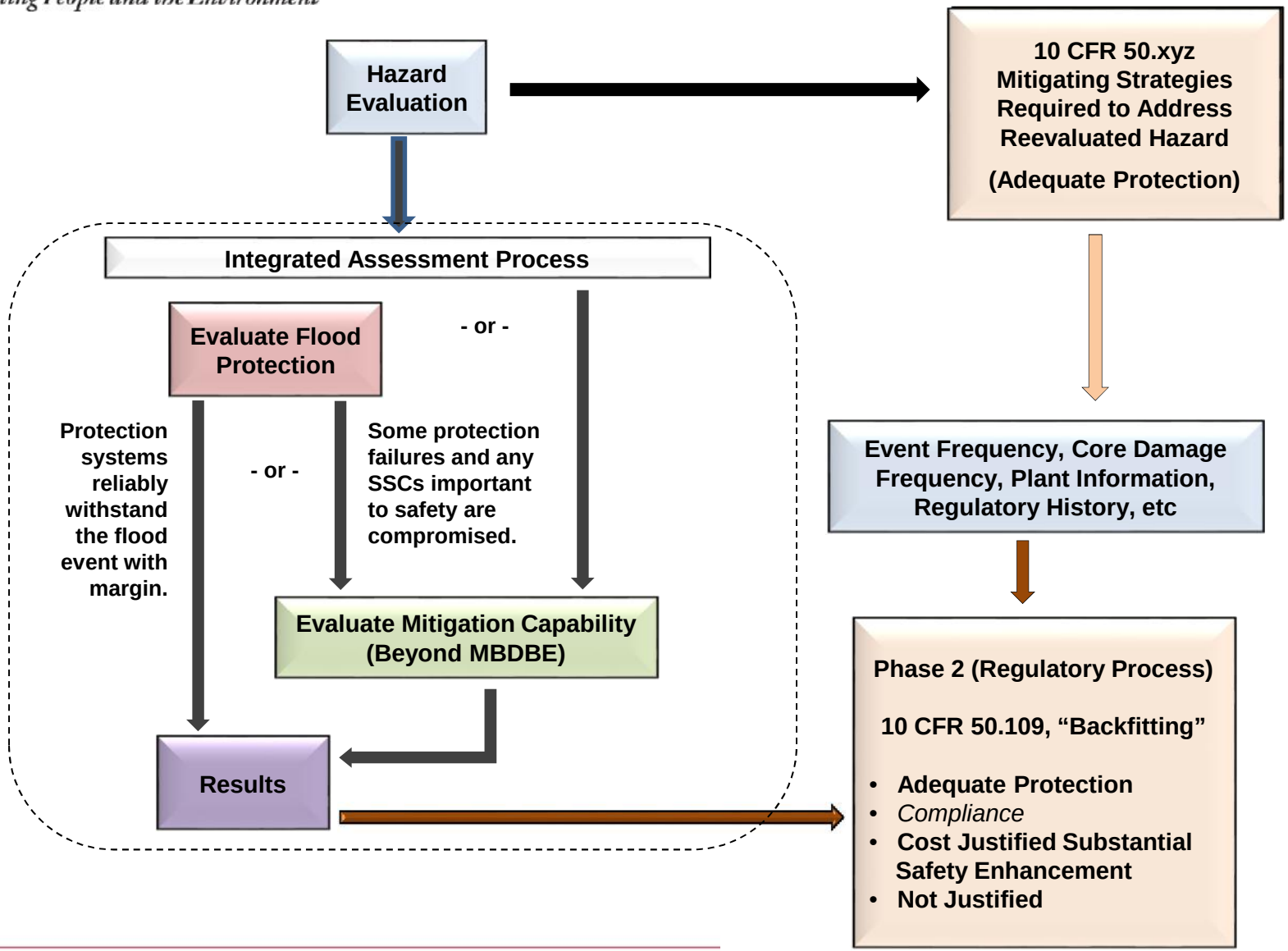

U.S.NRC
United States Nuclear Regulatory Commission
Protecting People and the Environment

Concern – Timely Regulatory Action

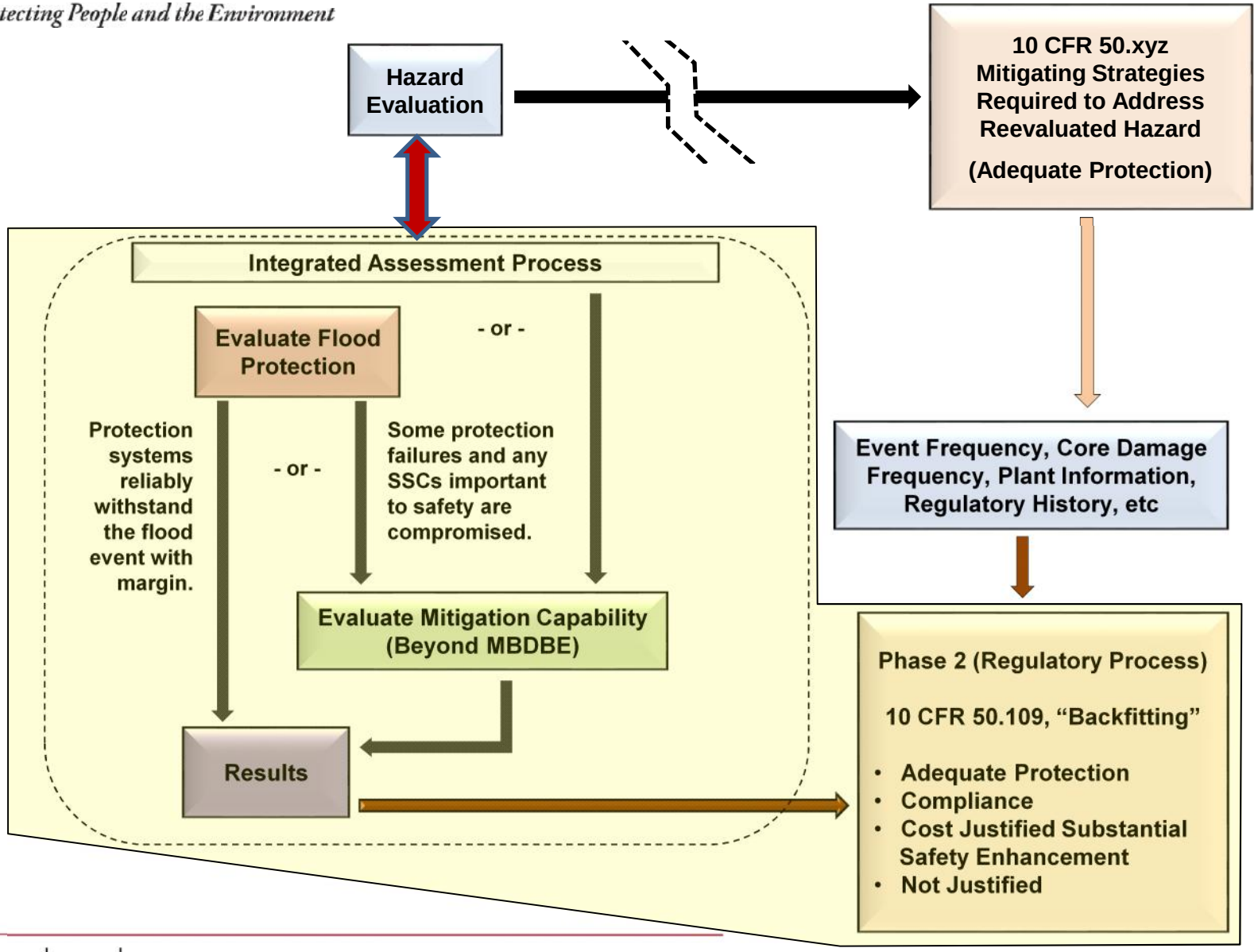

Japan Lessons Learned

U.S.NRC
United States Nuclear Regulatory Commission
Protecting People and the Environment

COMSECY Recommendation

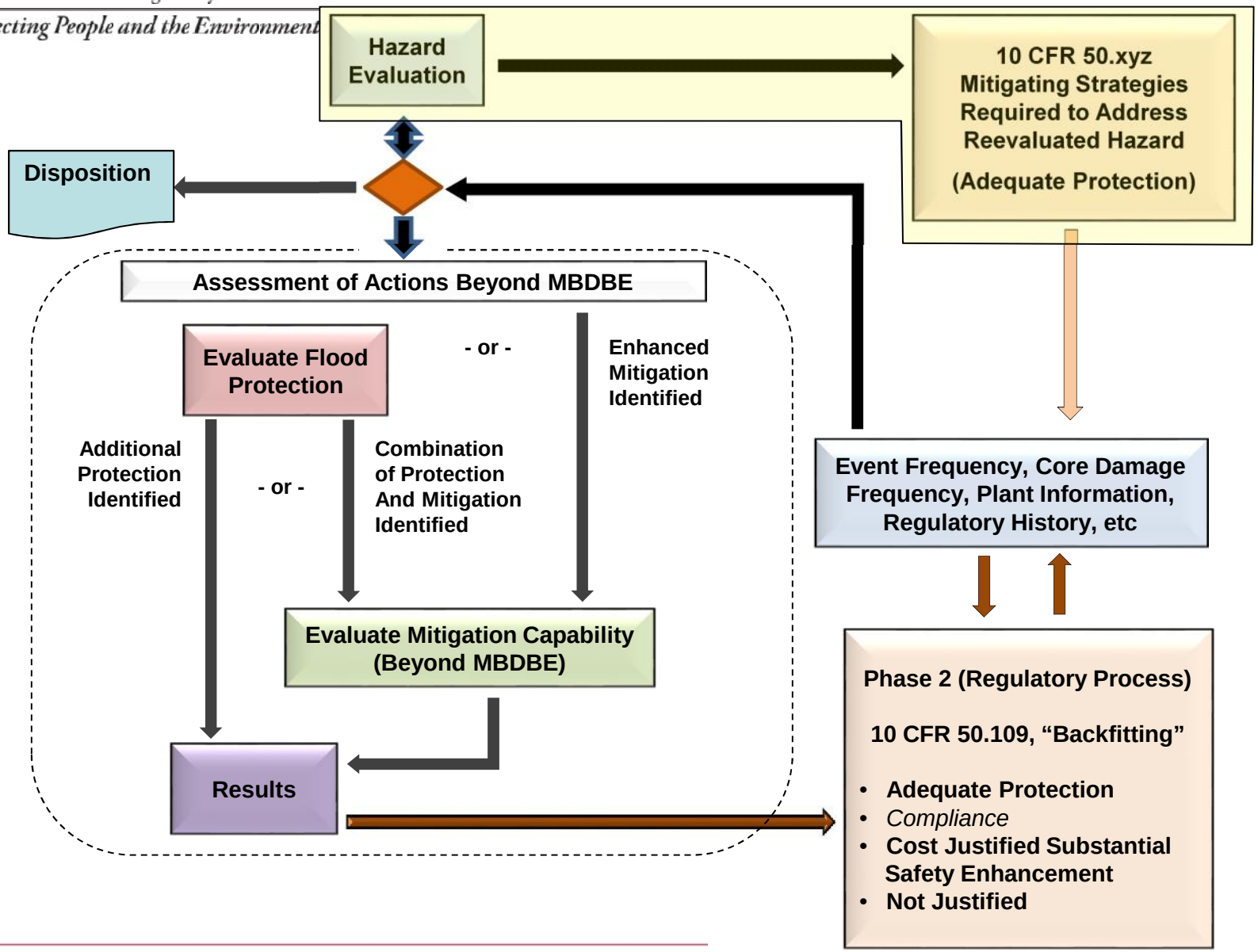

Japan Lessons Learned

U.S.NRC
United States Nuclear Regulatory Commission
Protecting People and the Environment

Summary

- Recommendations
  1) Mitigating Strategies to address reevaluated flooding hazards
  2) Targeted strategies; Some scenarios may damage sites
  3) Integrate mitigating strategies and flooding reevaluations
- Focus on mitigating strategies to achieve timely safety enhancements, with plant-specific consideration of additional evaluations/actions
- Decisions to be incorporated into MBDBE rulemaking
  - Revisions to mitigating strategies and flooding-related plans and guidance
  - Assess implications for other hazard reevaluations and NRC activities

U.S.NRC
United States Nuclear Regulatory Commission
Protecting People and the Environment

Backup Slides

U.S.NRC
United States Nuclear Regulatory Commission
Protecting People and the Environment

Industry's Preliminary Process

From NRC Staff's October 3, 2014, ACRS Presentation

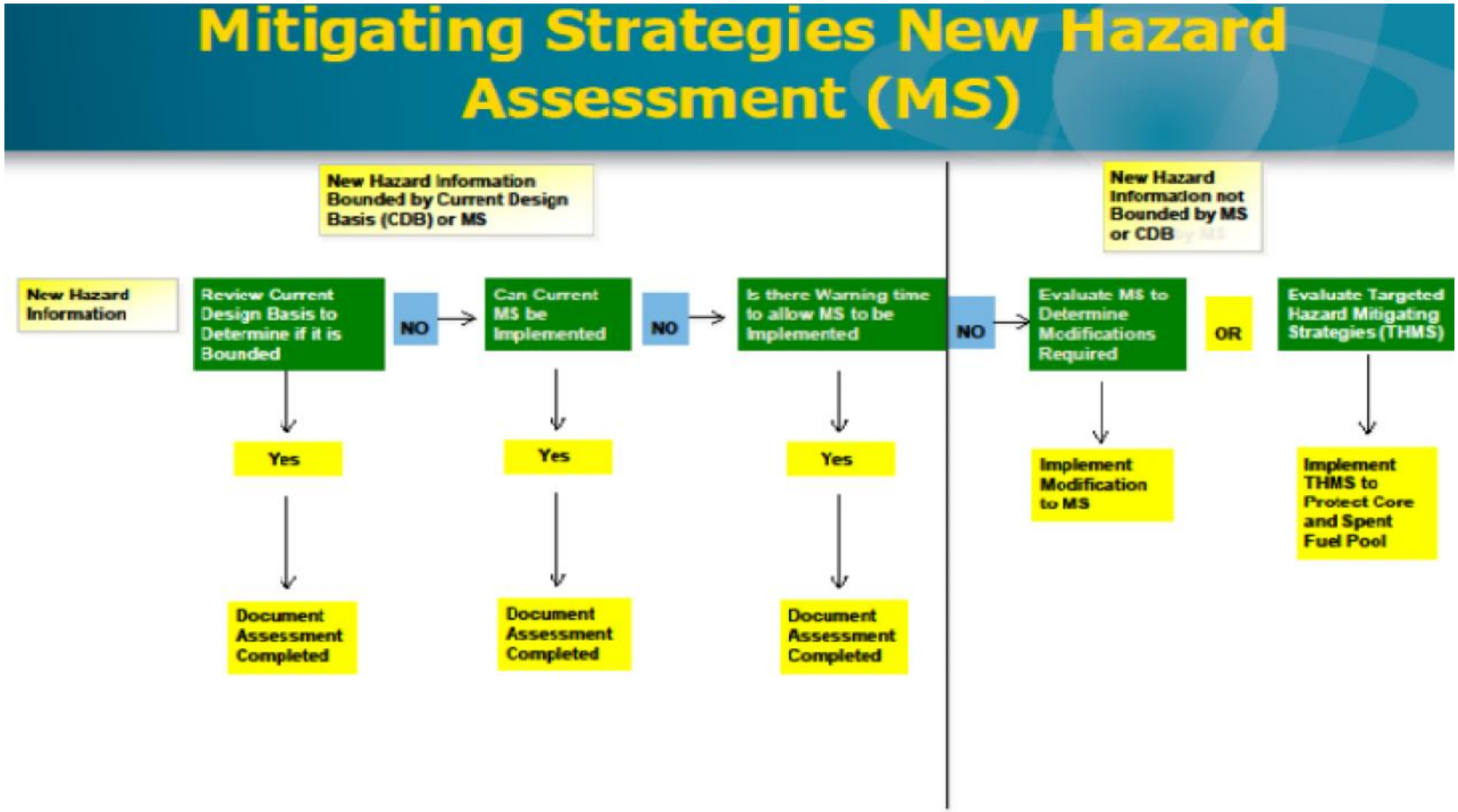

NEI
NUCLEAR ENERGY INSTITUTE
nuclear. clean air energy.

Design Basis

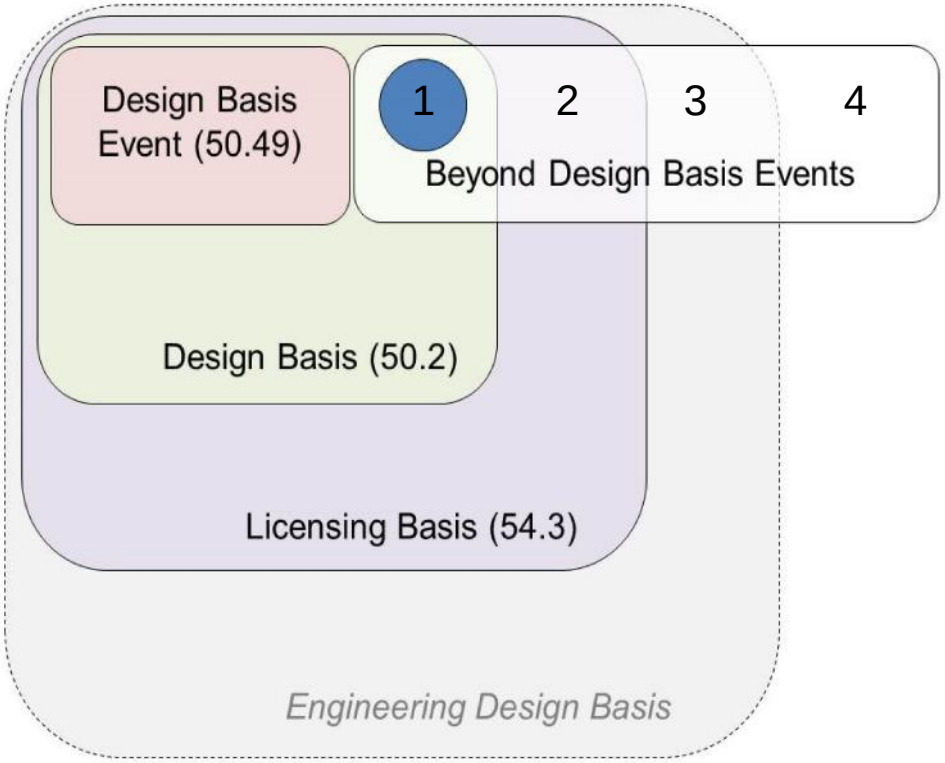

Note that beyond-design-basis events might warrant:

1) establishing design basis requirements for affected SSCs (e.g., mitigating strategies for flooding reevaluations),
2) a feature or action documented in the licensing basis (e.g., flooding enhancement or interim action captured as regulatory commitment in 50.54(f) response),
3) inclusion in licensee programs (engineering design basis) outside of regulatory controls (e.g., flood protection for SSCs not important to safety for asset protection reasons), or
4) No action or documentation (e.g., event considered not credible)

COMSECY Flow Chart

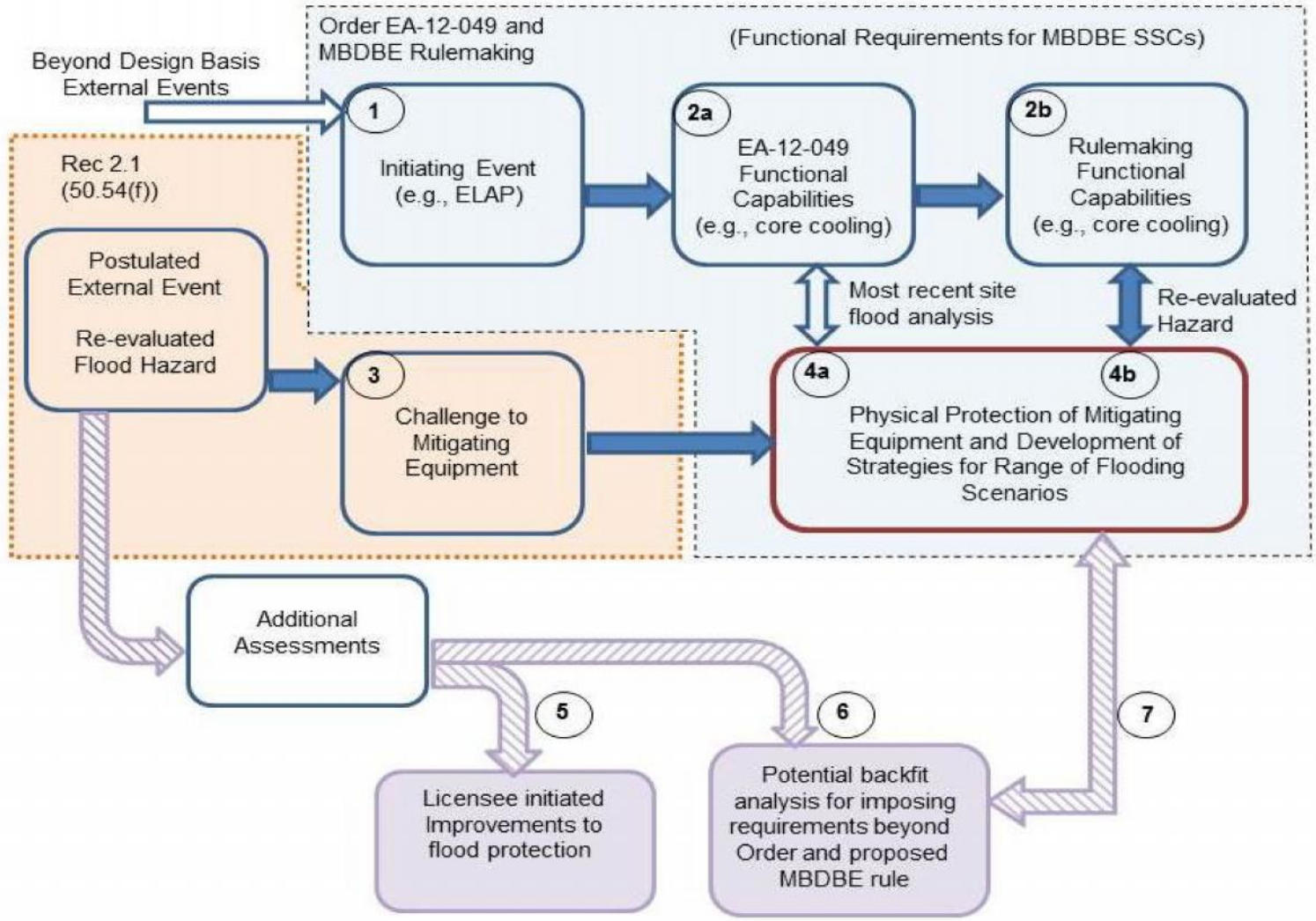

Summary of NCP-2014-010
Non-Concurrence on COMSECY Titled "Integration of Mitigating Strategies for Beyond-Design-Basis External Events and the Reevaluation of Flooding Hazards"

Presentation to ACRS, December 4, 2014

Michelle Bensi, Ph.D., Civil Engineer, NRO/DSEA/RHM1
Suzanne Schroer, Technical Assistant, RES/DRA (formerly NRO/DSRA/SPRA)
Marie Pohida, Senior Reliability and Risk Analyst, NRO/DSRA/SPRA
Malcolm Patterson, P.E., Reliability and Risk Analyst, NRO/DSRA/SPRA
Valerie Barnes, Ph.D., Senior Human Factors Analyst, RES/DRA/HFRB
Joseph Kanney, Ph.D., Hydrologist, RES/DRA/ETB
Jeffrey Mitman, Senior Reliability and Risk Analyst, NRR/DRA/APHB (on rotation to RES/DRA/PRAB)
David Desaulniers, Ph.D., Senior Technical Advisor for Human Factors, NRO/DCIP
George Lapinsky, Human Factors Specialist, NRR/DRA/APHB
Fernando Ferrante, Ph.D., Reliability and Risk Analyst, NRR/DRA/APHB
Kenneth See, P.E., Senior Hydrologist, NRO/DSEA/RHM1
Jacob Philip, P.E., Senior Geotechnical Engineer, RES/DRA/ETB

Primary Safety Concerns in Non-Concurrence

With the systematic, graded integrated assessment (JLD-ISG-2012-05), we will:

- Understand the impact of reevaluated flood hazard on plant safety
- Understand potential vulnerabilities and cliff-edge effects
- Determine whether protection is adequate
- Identify safety enhancements and determine their significance
- Gather information to support a decision to modify, suspend, or revoke a license

COMSECY removes this systematic assessment

- COMSECY approach will not systematically consider flooding protection of safety-related equipment (e.g., EDGs, ECCS) or perform a flood-specific evaluation of mitigation*
- COMSECY approach results in non-safety-related mitigating strategies as the ***only*** defense for reevaluated flooding hazards
  - Reevaluated flood hazards are based on present-day (design basis) guidance and methods
  - Mitigating strategies are intended for additional defense-in-depth for a beyond-design-basis external event

No basis for confidence in undefined approach advocated by COMSECY

- Relies on an unspecified staff process to initiate new regulatory actions
- Assumes NRC already knows which plants will require additional action

*The term "mitigation" in the integrated assessment ISG is not synonymous with the term "mitigating strategies" used in conjunction with Order EA-12-049

Specific Concerns Regarding COMSECY
[as Described in NCP-2014-010]

1. It departs from the intent of NTTF Recommendation 2.1.
2. It departs from previous Commission and Congressional direction.
3. It deviates from the implementation process currently established for reevaluating flooding hazards and plant response.
4. It may create regulatory inconsistencies.
5. **It presumes a conclusion that adequate protection has been achieved and, in most cases, additional regulatory actions are either not expected or not warranted.**
6. **It does not elicit sufficient information to support a staff conclusion regarding the need for additional regulatory action.**
7. It does not incorporate lessons learned from operating experience.
8. It fails to distinguish between the intended purpose of the integrated assessment and activities for mitigating strategies and does not recognize the differences between guidance associated with the two activities.
9. It does not adequately distinguish between consequential floods and the reevaluated flood hazard.
10. It is vague in its description of “targeted mitigating strategies.”
11. It is not responsive to external recommendations by regarded experts.
12. It creates inconsistency regarding the manner in which different external hazards are treated by NRC under Recommendation 2.1.

Supplemental Information

Plant-specific examples

Plant 1

	Hazard information*	Plant response information
Current licensing/design basis	• Nominal river level: 0 ft • Site grade elevation: 13 ft • Design basis flood (PMF): 23 ft	Protected from a design basis flood by a full set of safety grade ECCS and onsite electrical safety grade distribution system (i.e., diverse, redundant, single failure proof)
Reevaluated hazard	• More than 20 feet greater than design basis • Disables the ECCS and Class IE electrical distribution system	?

*All elevations are normalized to nominal river level

Key questions:

- Are mitigating strategies appropriate for reevaluated hazard (including less severe but more frequent events)?
- Are there efficient/effective protection options?
- Should we consider changing the design or licensing basis?
- Is this an adequate protection issue?

Integrated Assessment is needed to answer these questions.

Plant 2

	Hazard information*	Plant response information
Current licensing/ design basis	• Nominal river level: 0 ft • Site grade elev: 22.5 ft • Original design basis flood: 17 ft • Later revision: ~29ft	**Under original design basis**: Full set of safety grade ECCS (i.e., diverse, redundant, single-failure-proof) because flood is below site grade **Under later revisions to hazard**: "There are no incorporated/exterior or temporary flood protection features designed to protect the site against a flood greater than [plant grade elevation]." • Reactor shutdown is followed by reactor disassembly and cavity flood up • "All station loads are de-energized and all plant doors are opened …" • Gasoline driven pumps provide makeup to pools and reactor
Reevaluated hazard	PMF normalized level slightly higher than 29 ft	?

*All elevations are normalized to nominal river level

Key questions:

- Are mitigating strategies appropriate for reevaluated hazard (including less severe but more frequent events)?
- Are there efficient/effective protection options?
- Should we consider changing the design or licensing basis?
- Is this an adequate protection issue?

Integrated Assessment is needed to answer these questions.

Plant 3

	Hazard information*	Plant response information

Current licensing/ design basis	• Nominal river level: 0 ft
	• Site grade elev: 25 ft
	• PMF: 34 ft
	  • Elevation would be reached in ~12 days
	  • Elevation would be sustained for ~11 days
		• Licensee flood protection procedure requires construction of a ring levee to protect the plant.
		• If construction of the levee is not completed or the levee fails (neither of which are low probability events), station blackout will occur.
		• Backup is to run RCIC without dc power.

Reevaluated hazard	PMF has increased	?

*All elevations are normalized to nominal river level

Key questions:

- Are mitigating strategies appropriate for reevaluated hazard (including less severe but more frequent events)?
- Are there efficient/effective protection options?
- Should we consider changing the design or licensing basis?
- Is this an adequate protection issue?

Integrated Assessment is needed to answer these questions.

Integrated Assessment

Systematic review of all plants with more severe flooding hazards yields information needed to support regulatory decisions:

- the ***extent*** of flooding issues at plants with known issues
- the ***number*** of plants that may have issues (including plants not yet identified)
- whether ***protection*** is adequate under all realistic flooding scenarios
- whether cost-effective, efficient flood protection measures (e.g., sandbags to protect EDG building) offer substantial ***safety enhancements***

COMSECY eliminates the integrated assessment

Supplemental Information

Summary of Specific Concerns in NCP-2014-010

1—Departs from the Intent of NTTF Recommendation 2.1

Task Force recommends that the Commission direct the following actions to **ensure adequate protection** from natural phenomena…

NTTF 2.1 Order licensees to reevaluate the . . . flooding hazards at their sites against current NRC requirements and guidance, and if necessary, update the design basis and SSCs important to safety to protect against the updated hazards. …

- NTTF recognized that flooding hazards must be accurately characterized to determine whether it is necessary to
  - update the design basis
  - modify SSCs important to safety
- For flooding that was not considered in the licensed design, the COMSECY proposes to ***substitute*** mitigation for protection in all cases.
- The COMSECY ***assumes*** that the mitigation strategy will be adequate and ***eliminates*** the flood-specific assessment required to validate that assumption.

2—Departs from Commission and Congressional Direction

- COMSECY does not clearly describe previous direction
- COMSECY does not clearly acknowledge that the proposed path forward represents a significant deviation from previous direction

SRM on SECY-11-0093	NTTF Report
SRM on SECY-11-0124	"Identify actions…to address plant-specific vulnerabilities"
SRM on SECY-11-0137	NTTF Prioritization
SRM on SECY-12-0025	"….necessary to confirm the adequacy of the hazards assumed for U.S. Plants and their ability to protect against them."
Consolidated Appropriations Act	"The [NRC] shall…require licensees to reevaluate the…flooding …hazard…The Commission shall require the licensees to update the design basis…if necessary."

3—Deviates from Established Implementation Process

Current NTTF R2.1 implementation process:

- Phase 1: Information Gathering:
  - Stage 1: Hazard Reevaluation using present-day licensing criteria (i.e., present-day design basis methods)
  - Stage 2: Integrated Assessment if reevaluated hazard > design basis*
- Phase 2: Regulatory Decisionmaking (e.g., change design or licensing basis)

The COMSECY does not:

- clearly articulate a sound basis, technical or otherwise, for the changes to the NTTF R2.1 implementation process
- completely describe the consequences of the proposed changes to the implementation process

4—Creates Regulatory Inconsistencies

The proposed path forward may lead to several regulatory inconsistencies:

1. The treatment of increased flooding hazards from dam failures may differ between:
   - sites for which there is ongoing regulatory activity that may lead to changes in the protection of the plant or other backfits
   - sites for which regulatory activity is not already ongoing
2. The treatment of new information about different flood mechanisms may differ.

   Ex: NRC may treat new information about increased flooding hazards from dam failures (at some sites) differently than new information about increased flooding hazards from other mechanisms such as storm surge and local intense precipitation.

5—Prejudges Safety Conclusions

Previous version of COMSECY:
". . . the NRC staff does not expect the reevaluated flooding hazards for most plants to affect the design-basis flood against which safety-related SSCs would need to be protected."

Current version of COMSECY:
"The flooding reevaluations would be used to define functional requirements and reference bounds for those specific SSCs used to support key safety functions within the mitigating strategies … Exceptions to this approach might be taken on a plant-specific basis if justified by the NRC evaluations performed in accordance with 10 CFR 50.109, "Backfittting."

- Previous version of COMSECY prejudged the outcomes of regulatory decisions made in response to flood hazard reevaluations
- Final version of COMSECY notes NRC's responsibility of consider changes to licensing or design basis in some cases
- Eliminating systematic integrated assessment means information will not be collected to understand whether additional regulatory actions (e.g., changes to design or licensing basis) are needed and justified.

6—Insufficient Information To Support a Staff Decision

COMSECY states:

- "Focusing the flooding-related Phase 2 decision-making on mitigating strategies means that **the integrated (total plant) assessment in Phase 1 is no longer needed...**"

  and

- "…the NRC staff would evaluate the need to perform a broader assessment of how beyond-design-basis flooding scenarios might impact plant features beyond mitigating strategies **on a case-by-case basis**..."

- A systematic evaluation of the impacts of the flood hazards from different flooding mechanisms on plant safety-related SSCs will not be performed.
- Staff cannot determine whether additional regulatory actions are needed regarding adequate protection or safety enhancements.
- Proposed approach is undefined and sufficient information **will not be** available to systematically know when to pursue further assessments.

7—Lessons Learned from Operating Experience Are Not Incorporated

- Since 2010, there have been:
  - 6 actual flooding events
  - 9 identified flooding issues related to flood protection or flood mitigation
  - 6 non-cited violations or green findings related to flood protection or flood mitigation
  - 12 greater-than-green findings related to flood protection or flood mitigation
    - 1 notice of violation
    - 8 white findings
    - 3 yellow findings

- The integrated assessment was developed with knowledge of operating experience.
- The COMSECY approach would reduce or eliminate the assessment of total plant response.

8—Differences Between Integrated Assessment and Mitigating Strategies Are Unclear

	Integrated Assessment	Mitigating strategies
Initiator	Flooding events (e.g., flood height, associated effects, flood event duration)	Extended loss of AC power and loss of normal access to ultimate heat sink
Purpose	Support decision to modify, suspend, or revoke license, if necessary	Provide additional defense in depth
Focus	Effects of flooding on total plant response, including safety-related SSCs	Effects of flooding on mitigating strategies equipment
Scope	Protection or mitigation,* as needed	Mitigating strategies only
Review criteria	Rigorous, systematic, and flood-specific assessment of total plant response Supports regulatory decision regarding need to change DB/LB	Relies on considerable engineering judgment Substantially different from the review of design basis accidents
Review criteria - Manual actions	Feasibility and reliability of manual actions, when used	Feasibility of "representative" manual actions
Outcomes	Confidence that site can withstand reevaluated flood hazard; information to support regulatory decision	Evaluate compliance with Order EA-12-049 for additional defense in depth

*The term "mitigation" in the integrated assessment ISG is not synonymous with the term "mitigating strategies" used in Order EA-12-049 and the COMSECY

9—Lack of Understanding of Consequential vs. Maximum Credible* Flood

* Maximum Credible Flood ≡ Reevaluated Flood

- NRC flood hazard regulatory guidance currently uses deterministic framework
  - Limited number of stylized event combinations used to develop estimates of "maximum credible" flooding hazard for each SSC important to safety
  - Such combinations are considered appropriate for establishing sufficiently severe flood for design purposes
- Operating reactors may be vulnerable to events that are smaller in magnitude than these "maximum credible" events
  - This insight is important to support regulatory decisionmaking
- COMSECY focuses on single maximum credible flood but does not address the importance of smaller events that still may be consequential to a site.

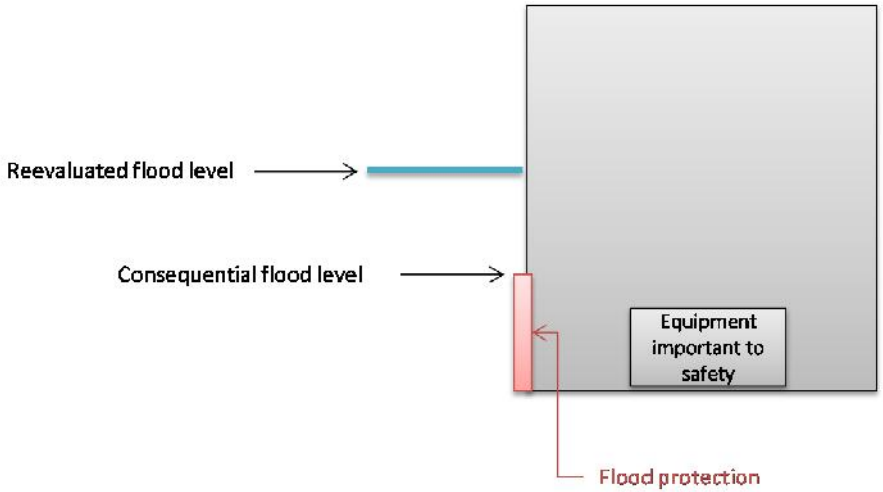


Source: USACE, via Wikimedia Commons

10—Vague Description of Targeted Mitigating Strategies

- FLEX guidelines proposed by industry and endorsed by the NRC staff are *function-based*.
  - "The FLEX strategies are focused on maintaining or restoring key plant safety functions and are not tied to any specific damage state or mechanistic assessment of external events. " (from NEI 12-06)
- "[T]argeted mitigating strategies" as described in the COMSECY are described as *scenario-specific*.
  - Scenario-specific strategies are not addressed in
    - existing regulatory guidance related to mitigating strategies
    - NEI 12-06 (FLEX Implementation Guide)
    - JLD-ISG-2012-01 (Compliance with Order EA-12-049)
  - What triggers a targeted strategy is not specified.
- Integrated assessment ISG provides scenario-specific evaluation guidance that is flood-specific and systematic.

11—Responsiveness to External Recommendations

NRC response to Government Accountability Office report

> "The NRC staff will evaluate the licensees' responses to this request for information, and will determine whether additional regulatory actions are necessary to provide additional protection against the updated hazards."

The COMSECY reverses, without technical justification, the NRC position documented in response to a recent report from the Government Accountability Office.

National Academies of Sciences report

> "Failure of the plant owner…and the principal regulator…to protect critical safety equipment at the plant from flooding in spite of mounting evidence that the plant's current design basis for tsunamis was inadequate."

Despite key Fukushima-related observations from a National Academies of Sciences report, the COMSECY reverses direction from NTTF recommendation.

12—Inconsistencies in the Treatment of External Hazards

- Parallel implementation processes are being used for both seismic and flooding
- The COMSECY proposes significant changes to the implementation process for flooding
- The COMSECY does not describe whether similar changes will be implemented for other external hazards
- It remains unclear why flooding hazards should be treated differently (and potentially less rigorously)
- The impacts of these inconsistencies have not been appropriately evaluated and could result in inefficiencies

Supplemental information

Background

Mitigating Strategies (Order EA-12-049)

- Purpose of mitigating strategies:
  - Provide "strategies and guidance for **additional defense-in-depth measures** to supplement the capabilities of permanently installed plant structures, systems, and components that could become unavailable following a **beyond-design-basis [external] event**"
- Rigor of staff reviews:
  - Substantially less rigorous than the review of design-basis accidents
    - No diversity
    - No redundancy
    - Single failure criteria do not apply (and all plant equipment assumed available)
  - Relies considerably on engineering judgment and existing knowledge and expertise in determining the acceptability
- Level of review is commensurate with the intended use of mitigating strategies as a **defense-in-depth measures** for **events that are expected to be rare**.
  - Note: Consequential flooding is not rare at all plants.

NTTF Recommendation 2.1

- NTTF Recommendation: Ensure that plants have **adequate protection** from seismic and flooding hazards, consistent with the current state of knowledge and analytical methods
- Actions are required by Congress
- Implementation:
  1. Reevaluate flood hazards using present-day guidance and methods used to site new reactors (i.e., design basis methods)
  2. Perform integrated assessment (IA) if reevaluated hazard is not bounded by the design basis
     - IA involves:
       - Consideration of complete flood characterization when evaluating plant response
       - Flood protection evaluation
       - Mitigation evaluation (if needed)
  3. Staff makes regulatory decision (e.g., update the design basis, including protection of SSCs important to safety)
- Recognizes that operating reactors cannot be resited/redesigned
  - IA provides systematic, flood-specific evaluation
  - IA adequately informs a regulatory decision

COMSECY goals
[Interpretation by authors of non-concurrence]

1. Mitigating Beyond Design Basis Events (MBDBE) Rule requires mitigating strategies to address reevaluated hazard
2. Recognize unconventional measures may be used for certain flood events
3. Truncate R2.1 process and re-define purpose of mitigating strategies
   - Specifies mitigating strategies as the way to address the reevaluated hazard
     - Typical principles of defense-in-depth and other traditional requirements not applied
   - No systematic consideration of flood protection or flood-specific evaluation of mitigation
   - No systematic evaluation of the impacts of the flood hazards
   - Undefined process for initiating regulatory decision making
   - Information not collected to understand plant response and decide whether additional actions are needed

Integrated Assessment Concept

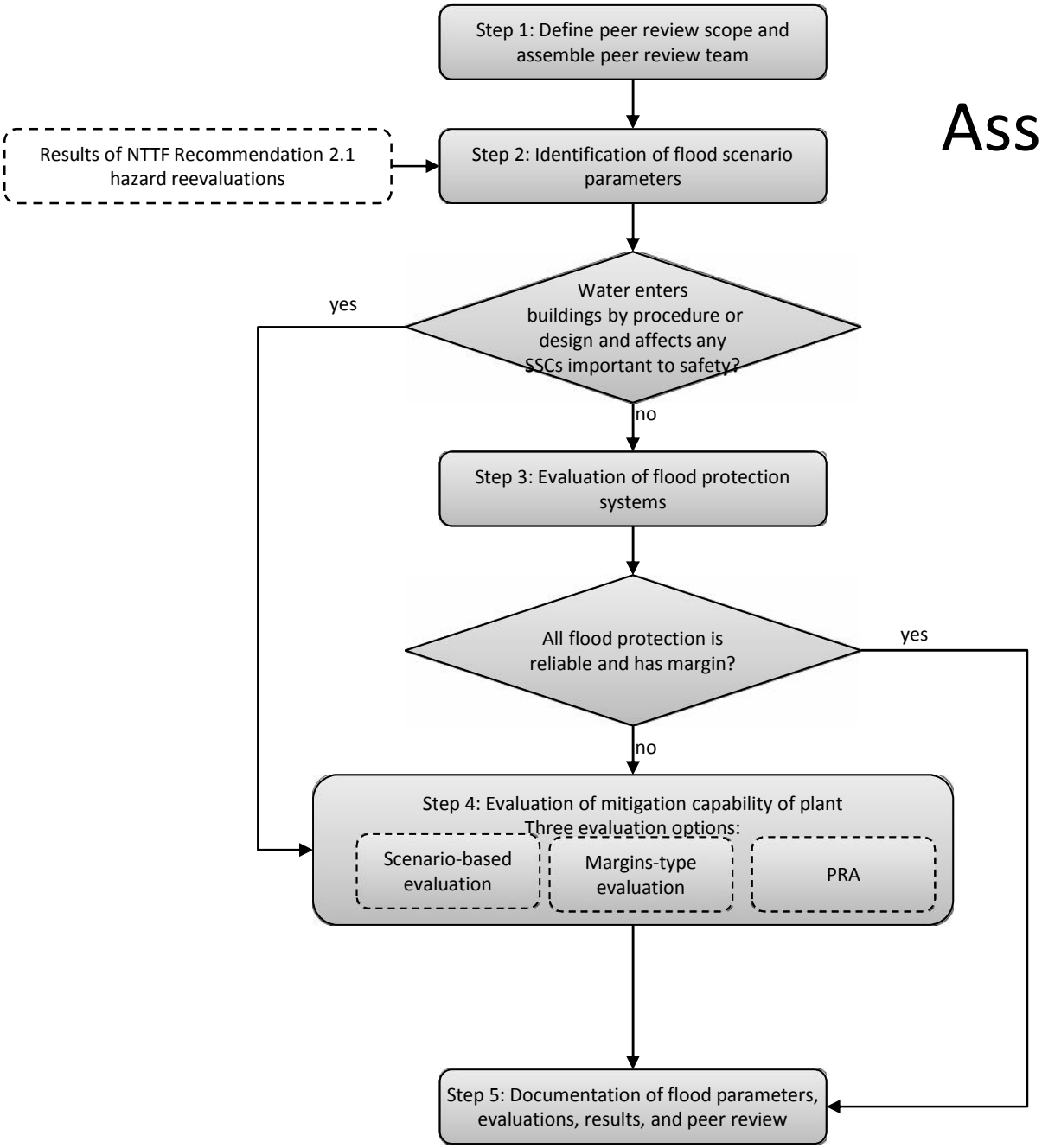

Key definitions

- Per Integrated Assessment interim staff guidance:
  - **Flood protection**: An incorporated, exterior or temporary structure SSC (e.g., barrier), or an associated procedure that protects safety-related SSCs against the effects of external floods, including flood height and associated effects.
  - **Mitigation**: The capability of the plant to maintain key safety functions in the event that flood protection systems fail (or are otherwise not available).
    - Note: The term “mitigation” in the integrated assessment ISG is not synonymous with the term “mitigating strategies” used in conjunction with Order EA-12-049 and COMSECY

NON-CONCURRENCE 2014-011 RELATED TO "INTEGRATION OF MITIGATING STRATEGIES FOR BEYOND-DESIGN-BASIS EXTERNAL EVENTS AND RE-EVALUATION OF FLOODING

Submitted by: Glenn Tracy, Gary Holahan, and Scott Flanders

Background

- NTTF recommended “Safety Through Defense-in-Depth”, including:
  - Recommendation 2: enhanced protection from design-basis floods and seismic events, where warranted.
  - Recommendation 4: enhanced mitigation, for both design-basis and beyond design-basis events.
  - Recommendation 8: enhanced severe accident mitigation capability, and
  - Recommendation 9: enhanced emergency preparedness

Background

- These recommendations constitute a rational set of enhancements, strengthening defense-in-depth, with each recommendation having a specific nexus to the Fukushima Daichi accident.

- The Commission supported these recommendations, in whole or in part, through various mechanisms: Orders, rule-makings, or information demands.

COMSECY proposal

The fundamental changes being proposed in the COMSECY are:

- 1) to limit staff and industry efforts on flooding to a confirmation that mitigation strategies can cope with the reevaluated flooding hazard; and
- 2) to eliminate (in our view) the systematic re-consideration of any other external flooding protection.

Consequences

1. The post-Fukushima recommendations would no longer constitute a full set of potential enhancements consistent with the Commission's defense-in-depth safety philosophy;
2. A systematic evaluation of the total plant response to flooding, addressing both protection and mitigation would be curtailed. This would constitute a lost opportunity to identify potential plant vulnerabilities and to implement practical measures to protect key safety-related equipment; and
3. A non-safety-related system or collection of systems, intended for beyond design-basis events would be used to compensate for potential weaknesses in or even non-compliances with flooding design-basis protection requirements.

NRO Position

- We support the paper's approach on one specific issue; namely, reaffirming the issue of flooding protection for mitigation equipment (i.e. using the 2.1 re-evaluated flooding levels in the 4.2 mitigation strategy).
- We believe it is also necessary to conduct a thorough and systematic re-evaluation of protection of the normal, design-basis safety equipment used for decay heat removal (e.g. the first line of defense including: diesel generators, electrical distribution equipment, motor-driven auxiliary feedwater, service water and other support systems) .

Summary

- Simply stated, we do not believe that mitigation is an appropriate substitute for protection.

- Both mitigation and protection are essential, but separate, elements of the Commission's defense-in-depth safety philosophy and should be treated as such.

United States Nuclear Regulatory Commission

Protecting People and the Environment

Regulatory Gap Analysis of the NRC's Cost-Benefit Guidance and Practices

ACRS Full Committee Meeting

December 4, 2014

U.S.NRC
United States Nuclear Regulatory Commission
Protecting People and the Environment

Purpose/Outline

- Purpose
  - Provide an overview of SECY-14-XXXX, “Regulatory Gap Analysis of the Nuclear Regulatory Commission’s Cost-Benefit Guidance and Practices.”
- Outline
  - Overview and Status
  - Background
  - Gap Analysis Scope and Methodology
  - Key Results
  - Differences in Cost-Benefit Practices Within the NRC
  - Enhancements to Be Considered in Future Guidance Updates
  - Path Forward

U.S.NRC
United States Nuclear Regulatory Commission
Protecting People and the Environment

Overview and Status

- Staff developed an information SECY paper, "Regulatory Gap Analysis of the NRC's Cost-Benefit Guidance and Practice"
- There are 3 associated enclosures
  - Scope and Methodology
  - Differences in NRC Cost-Benefit Practice
  - Enhancements to Be Considered in Future Cost-Benefit Updates
- Staff revised paper based on ACRS subcommittee feedback.

U.S.NRC
United States Nuclear Regulatory Commission
Protecting People and the Environment

SECY Revisions Based on Subcommittee Feedback

- Completed summary table of differences in NRC cost-benefit regulations, practices, and guidance (Enclosure 2)
- Clarified basis for statement that the cost-benefit regulatory framework is sound
- Expanded the discussion on the use of PRA and other studies in regulatory analyses
- Clarified next steps

U.S.NRC
United States Nuclear Regulatory Commission
Protecting People and the Environment

Background

- SECY-12-0110, “Consideration of Economic Consequences within the U.S. NRC’s Regulatory Framework” recommended enhancing cost-benefit guidance to harmonize across the agency.
- SRM-SECY-12-0110 approved the staff’s recommendation and directed the staff to “provide the Commission with a regulatory gap analysis prior to developing new guidance for application across business lines (e.g., materials, fuel cycle facilities, or emergency preparedness.”
- SECY-14-0002, “Plan for Updating NRC’s Cost-Benefit Guidance” described the two-phased approach to revise NRC guidance
- Phase II is informed by the gap analysis and Commission direction from SECY-14-0087, “Qualitative Consideration of Factors in the Development of Regulatory Analyses and Backfit Analyses.”

U.S.NRC
United States Nuclear Regulatory Commission
Protecting People and the Environment

Gap Analysis Scope

NRC Business Lines and Programs	Regulatory Analyses	Backfit Analyses	Environmental Analyses
Operating Reactors	For each cell: •Regulatory Requirements •Guidance •Practice (e.g., assumptions, data source, use of qual. factors)		
New Reactors			
Materials			
Fuel Cycle Facilities			
Emergency Preparedness			
Security			

Differences across business lines and programs

Differences across cost-benefit analyses

Excerpt from Enclosure 2

Environmental Analysis			
	Regulatory Requirements	Guidance	Practice
Operating Reactors	Severe Accident Mitigation Design Alternatives: 10 CFR 51.30(d) & (e); 51.31(b)(ii) & (c); 51.50(c); 51.54; 51.55; 52.171(a)(3). Cost Benefit Analysis: 10 CFR 51.45(c); 51.49(f); 51.50(b)(2); 51.53(c)(2); For DEISs: 51.71(d) & (f); 51.75 (b); 51.76(f); For FSEISs: 51.92(e)(4); For post-construction SEISs: 51.95(c)(2) Environmental Report: 52.17(a)(2), 52.47(b)(2), 52.80(b)	External: None NRC: NUREG-1555 Supplement 1; RG 4.2 Supplement 1; NUREG/BR-0058; NUREG/BR-0184; NUREG-1530	Assumptions: license life, waste confidence, purpose and need, fuel cycle generic, design specific information (PRA & SAMDAs), emergency response modeled, meteorology data for the airborne plume modeled, other pathways release data (generic or site-specific, economic data (generic or site-specific)
New Reactors	Same	External: None NRC: NUREG-1555; RG 4.2 (in revision), NUREG/BR-0058; NUREG/BR-0184; NUREG-1530	Same as operating reactors. Note: A cost-benefit analysis is required for radwaste systems in the safety review of a new reactor application by Section II.D of 10 CFR Part 50 Appendix I
Materials	Same	External: None NRC: NUREG-1748; NUREG/BR-0058; NUREG/BR-0184; NUREG-1530	No severe accident analyses or use of PRAs. No SAMDAs.
Fuel Cycle Facilities	Same	External: None NRC: NUREG-1748; NUREG/BR-0058; NUREG/BR-0184; NUREG-1530	No severe accident analyses or use of PRAs. No SAMDAs.
Emergency Preparedness	Same	External: NRC:	No severe accident analyses or use of PRAs. No SAMDAs.

U.S.NRC
United States Nuclear Regulatory Commission
Protecting People and the Environment

Analysis Methodology

- Goals for the analysis
  - Identify similarities and differences in cost-benefit regulations, guidance, and practices across the agency
  - Discuss potential implications of similarities and differences
- Analysis tools
  - Staff subject matter expert questionnaires
  - Internal workshop series
  - Literature review
  - Limited review of other federal and internal agencies practices
- Terminology
  - Gaps: Constraints imposed by regulations
  - Differences: variances in approach, guidance, practice
  - Enhancements: potential improvements

U.S.NRC
United States Nuclear Regulatory Commission
Protecting People and the Environment

Key Results

1. **Current cost-benefit regulatory framework is sound**
   - No NRC regulation impedes the staff from performing cost-benefit analyses
   - NEPA cost-benefit analysis requirements are in 10 CFR 51
   - Backfitting requirements are in 10 CFR 50, 70, 72, 76 (analogous requirements for issue finality are in 10 CFR 52)
   - No NRC regulations require performing regulatory analyses
   - Sufficient flexibility to allow for updating and harmonizing NRC cost-benefit guidance (NUREG/BR-0058, NUREG/BR-0184)
2. **There are differences in cost-benefit practices within the NRC**
   - Substantial Safety or Security Enhancement Screen
   - Time Horizon
   - Sensitivity Analyses
   - Quantification of Benefits

U.S.NRC
United States Nuclear Regulatory Commission
Protecting People and the Environment

Substantial Safety or Security Enhancement Screen

- Staff identified a difference between power reactor safety and all other NRC business lines and programs subject to a backfit requirement
- For power reactor safety regulatory actions, analyses involve the use of the Safety Goal Policy
- Safety Goals do not apply to other regulated activities
- Staff is considering whether cost-benefit guidance should be updated to more accurately reflect the current practices of all business lines and programs

U.S.NRC
United States Nuclear Regulatory Commission
Protecting People and the Environment

Time Horizon

- The staff identified a difference among business lines in the approach to analysis timeframe of regulatory analyses
- The Office of Management and Budget (OMB) Circular A-4 states that the time frame should cover a period long enough to encompass all the important benefits and costs
- For nuclear power plants, the analyst assumes one license renewal term and takes the average of the remaining life of the class of plants
- For materials licensees, the analyst evaluates based on the license term

U.S.NRC
United States Nuclear Regulatory Commission
Protecting People and the Environment

Sensitivity Analyses

- The staff identified a difference in the application of sensitivity analyses across business lines for regulatory analyses
- Sensitivity analyses can examine the extent to which the uncertainty of each element affects the cost to achieve the regulatory objective being examined
- The NRC can benefit from a harmonized approach in the use of sensitivity analyses across business lines

U.S.NRC
United States Nuclear Regulatory Commission
Protecting People and the Environment

Quantification of Benefits

- Staff identified a difference among business lines regarding the extent to which benefits are quantified in regulatory analyses
- Modeling tools and techniques for quantifying benefits used for power reactor safety regulations are typically not available for other business lines and programs
- Staff is currently seeking Commission approval for updating guidance as stated in SECY-14-0087, “Qualitative Consideration of Factors in the Development of Regulatory Analyses and Backfit Analyses”

U.S.NRC
United States Nuclear Regulatory Commission
Protecting People and the Environment

Enhancements

- During the analysis, staff identified enhancements in guidance and practice that may need further consideration
  - Treatment of Uncertainty
  - Use of PRA and Other Studies in Regulatory Analyses
  - Distributive Impacts and Equity
  - Offsite Properties with Iconic Value
  - Impact on Critical Infrastructures
- In general, the staff recognizes the need to improve the accuracy of the agency's quantitative estimates

U.S.NRC
United States Nuclear Regulatory Commission
Protecting People and the Environment

Treatment of Uncertainty

- A discussion of uncertainty has not always been included in NRC regulatory analyses
- Uncertainty is an estimating best practice, which is addressed in many guides and references
- A discussion of uncertainty informs the decisionmaking process
- OMB requires a formal quantitative analysis of uncertainties for rules with annual economic effects of $1 billion or more

Use of PRA and Other Studies in Regulatory Analyses

- PRA and other related severe accident studies may improve the fidelity of regulatory analyses
- Resource limitations may necessitate the use of limited scope or historical PRA studies
- The analyst must be cognizant of underlying assumptions
  - Past PRA studies referenced in regulatory analysis guidance for NPPs are typically partial-scope PRAs
- Examples of analysis choices include time truncation and distance truncation

Time Truncation

- The staff identified a difference among modeling assumptions for severe reactor accident analysis
- Guidance does not currently specify a truncation time
- The state of practice has varied over the years, from 24-72 hours

U.S.NRC
United States Nuclear Regulatory Commission
Protecting People and the Environment

Distance Truncation

- NRC regulatory analyses have historically considered health and economic consequences within 50 miles of a facility
  - Consistent with NUREG/BR-0058
- OMB Circular A-4 states that the “analysis should focus on benefits and costs that accrue to citizens and residents of the United States”
- Analyses of offsite consequences of beyond-design basis events have shown that the consequences of severe accidents involving very large releases could extend beyond 50 miles under certain conditions

U.S.NRC
United States Nuclear Regulatory Commission
Protecting People and the Environment

Distributive Impacts and Equity

- Executive Order 12866 - the consideration of "distributive impacts" and "equity"
  - As an independent regulatory agency, NRC is not required to comply with EO 12866 and there is no statutory requirement to consider "distributive impacts" or "equity"
- OMB guidance states:
  - The term "distributional effects" refers to the description of the net effects of a regulatory [action] across the population and economy, divided up in various ways (e.g., income groups, race, sex, industrial sector).
- Distributive impacts and equity may overlap with environmental justice concerns
- Other federal agencies, including the EPA, have incorporated such considerations in their guidance

U.S.NRC
United States Nuclear Regulatory Commission
Protecting People and the Environment

Offsite Properties with Iconic Value

- Currently no NRC guidance on this topic
- NUREG/BR-0184 attribute 18, “other considerations”
- An example would be impacts of the regulatory action on offsite properties with iconic value or a unique value to a particular community or group
- This potential enhancement is driven in part by a Native American tribal concern raised during NRC public outreach

U.S.NRC
United States Nuclear Regulatory Commission
Protecting People and the Environment

Impact on Critical Infrastructures

- The U.S. Department of Homeland Security defines critical infrastructure as “the assets, systems, and networks, whether physical or virtual, so vital to the United States that their incapacitation or destruction would have a debilitating effect on security, national economic security, national public health and safety, or any combination thereof.”
- The NRC does not consider effects to critical infrastructure in cost-benefit analyses
- If considered, impacts to critical infrastructure could affect the outcome of a cost-benefit analysis

U.S.NRC
United States Nuclear Regulatory Commission
Protecting People and the Environment

Path Forward

- The staff will update cost-benefit guidance to harmonize across business lines and programs
- Staff recognizes cost-benefit practices may differ among business lines and programs
- The staff will document bases for dispositioning any differences in practice
- Staff will continue to engage the ACRS during the process to update cost-benefit guidance
- The staff will seek Commission guidance regarding potential policy issues

U.S.NRC
United States Nuclear Regulatory Commission
Protecting People and the Environment

References

- SECYs available at http://www.nrc.gov/reading-rm/doc-collections/commission/ or in ADAMS
- SECY-12-0110 available at ML12173A478
- SRM-SECY-12-0110 available at ML13079A055
- NUREG/BR-0184 available at ML050190193
- NUREG/BR-0058 available at ML042820192
- NUREG-1409 available at ML032230247
- NUREG-1530 available at ML063470485

U.S.NRC
United States Nuclear Regulatory Commission
Protecting People and the Environment

References (cont'd)

- EO 12866, 58 FR 51735 (October 4, 1993) and http://www.whitehouse.gov/omb/inforeg_riaguide/
- OMB Circular A-4, available at ML11231A834
- OMB, Economic Analysis of Federal Regulations Under Executive Order 12866, January 11, 996 accessible at http://www.whitehouse.gov/omb/inforeg_riaguide

U.S.NRC
United States Nuclear Regulatory Commission
Protecting People and the Environment

Acronyms

- ACRS — Advisory Committee on Reactor Safeguards
- SECY — NRC commission paper
- CFR — Code of *Federal Regulations*
- DEIS — Draft Environmental Impact Statement
- EO — Executive order
- EPA — Environmental Protection Agency
- FSEIS — Final Supplemental Environmental Impact Statement
- NEPA — National Environmental Policy Act
- NPP — Nuclear power plant
- NRC — Nuclear Regulatory Commission
- NUREG — NRC staff report
- OMB — Office of Management and Budget
- PRA — Probabilistic risk assessment
- SEIS — Supplemental Environmental Impact Statement
- SAMDA — Severe Accident Mitigation Design Alternative

Advisory Committee on Reactor Safeguards

Open Phase Initiative Update

December 4th, 2014

Scot Greenlee – Executive Sponsor
Exelon Senior Vice President
Engineering & Technical Services

Agenda

- Byron Station Open Phase Events
- Industry Open Phase Condition Initiative
- Industry Actions

Byron Station Open Phase Events

Byron Event Description

Unit 2

- January 30, 2012
- Mechanical failure of 345 kV under-hung porcelain insulator on system aux transformer (SAT) A-frame structure creating a line to ground fault on the SAT side
- Open phase condition - protective relaying not designed to detect / isolate
- Result was a reactor trip on reactor coolant pump (RCP) undervoltage
- Loss of off-site power (LOOP) resulted
- Unusual Event declared
- Loss of all operating motor driven safety loads
- Loss of RCP seal cooling for eight minutes
- Manual operator action restored safety systems

Unit 1

- February 28, 2012
- Mechanical failure of under-hung porcelain insulator on SAT A-frame structure creating a line to ground fault on the system side
- Protective relaying isolated the faulted component and transferred power to the alternate supply
- Systems worked as designed and Byron station generating units remained on-line
- LOOP resulted
- Unusual Event declared

- **Ohio Brass porcelain insulator manufacturing defect**
- **Design vulnerability - failure to automatically detect / isolate an open phase condition**

Byron Unit 2 Event Description (January 2012)

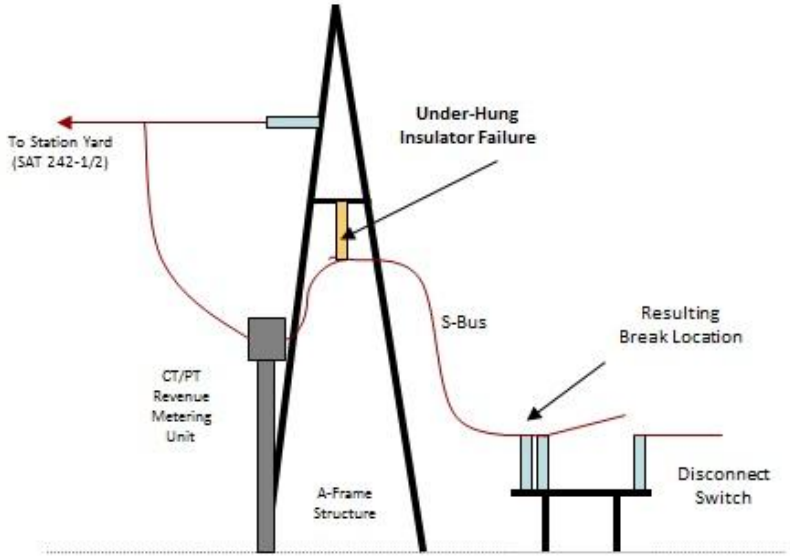

Existing A-Frame
Structure Configuration

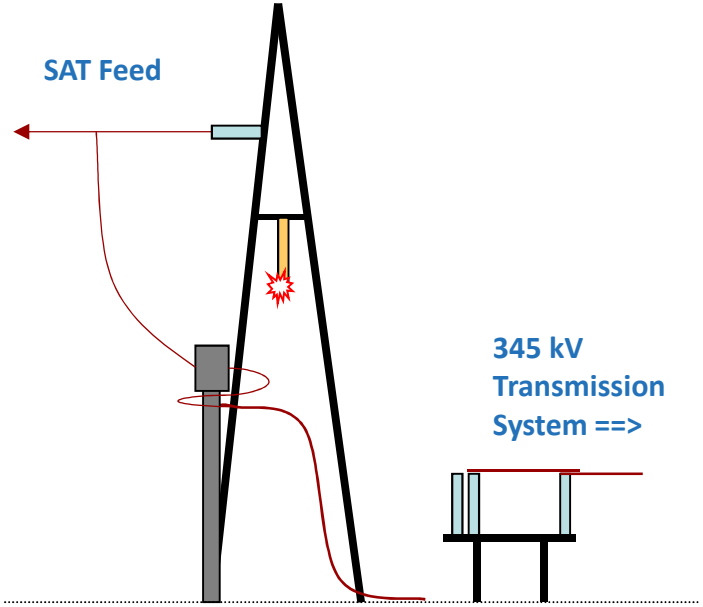

Byron Event Description

Unit 2

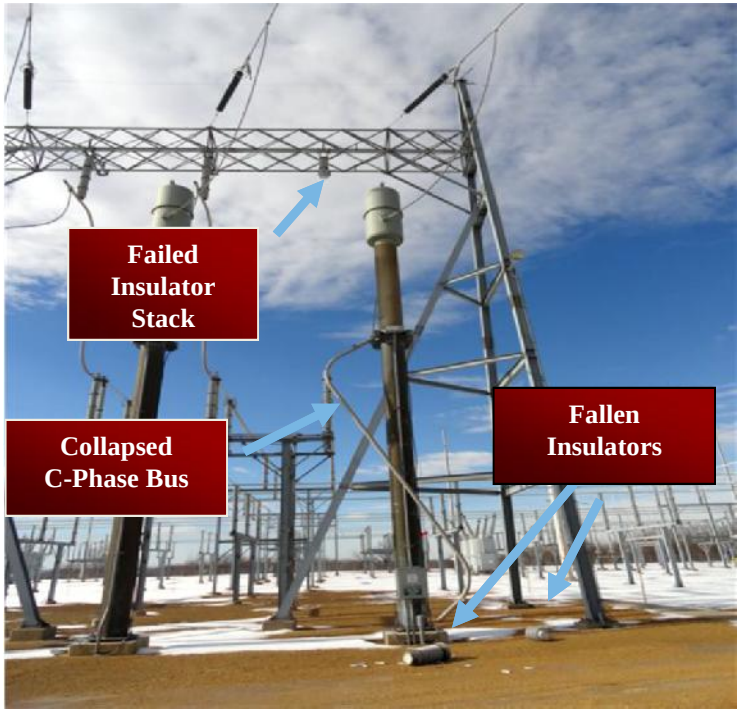

Unit 2 Failed Insulator

Unit 1 Failed Insulator

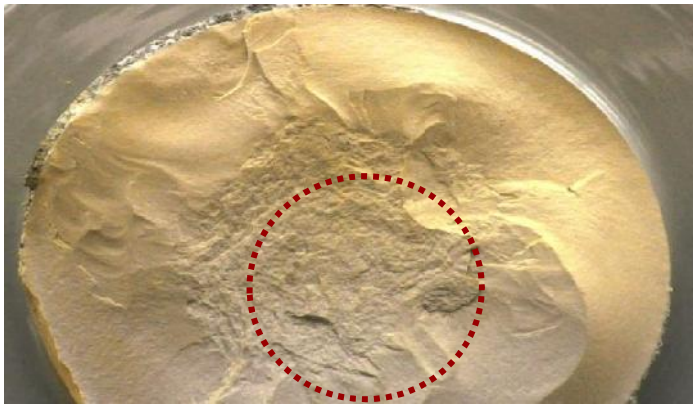

Insulator failure due to poor quality porcelain

Impact of Open Phase

Grounded – Byron Unit 2

- Significant voltage imbalance due to ground on transformer side
- 4.16 kV safety bus per unit (pu) voltage
  - Vab 1.0142 pu
  - Vbc 0.5912 pu
  - Vca 0.5870 pu

Ungrounded – Byron Unit 2

- 4.16 kV safety bus per unit voltage under light loading
  - Vab 1.0408 pu
  - Vbc 1.0407 pu
  - Vca 1.0180 pu
- Cannot detect by voltage magnitude

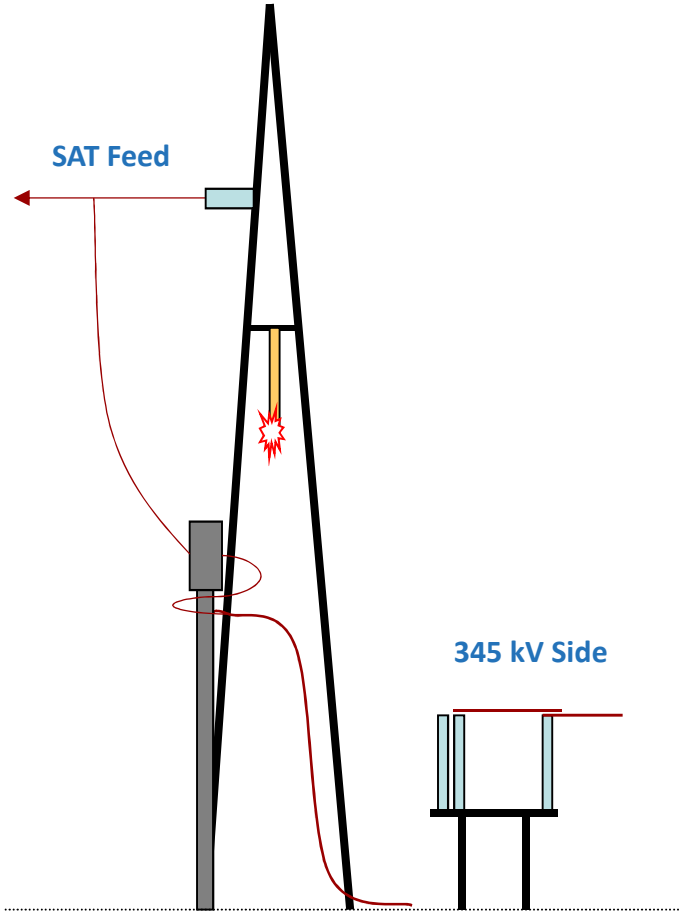

Byron Station Risk Profile Example

Core Damage Frequency (CDF) Impact as a Function of Plant Configuration

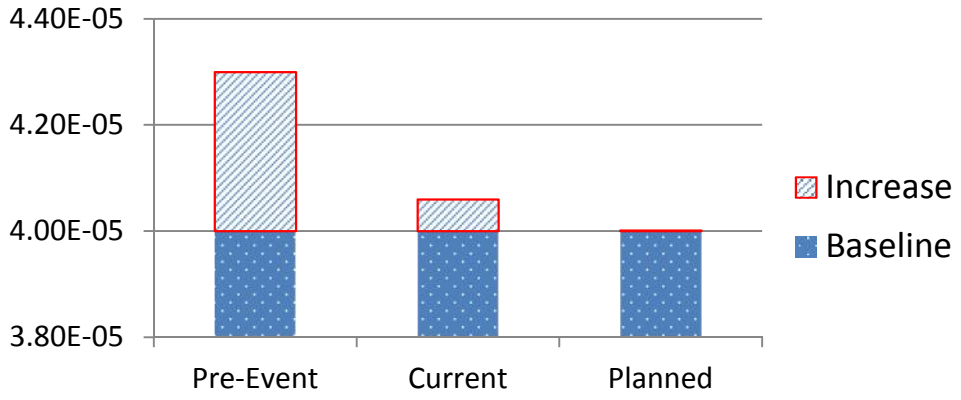

Condition	Failures Modeled	Approximate Increase in CDF
Pre-Event	Operator action	3E-6 or 7.5%
Current Configuration	Alarm or operator action	6E-7 or 1.5%
Planned Configuration	Automatic actuation and operator backup	1E-8 or 0.03%

Industry Open Phase Condition Initiative

Open Phase Condition Initiative - Goal

An open phase condition (OPC) will not prevent functioning of important-to-safety structures, systems and components. An open phase condition is defined as an open phase, with or without a ground, which is located on the high voltage side of a transformer connecting a General Design Criterion (GDC) 17 off-site power circuit to the transmission system.

- The OPC initiative only applies to “active” safety features plants
- The initiative includes requirements to address two open phases (based on the Forsmark event)
- The initiative allows use of non-safety related circuits

OPC Initiative Key Milestones
Operating Plants

1. December 31, 2014 - Demonstration of compliance with the open phase condition criteria through analysis or identify appropriate actions required to demonstrate compliance.
2. December 31, 2016 - Implementation of design changes, if necessary, to comply with the open phase condition criteria. The "active" actuation features of new technology designs may be installed in a monitoring mode, with adequate justification, to demonstrate reliability.
3. December 31, 2017 - If a monitoring period was deemed necessary, completion of any design adjustments identified during the monitoring period and enabling all "active" actuation features needed to demonstrate compliance with the open phase condition criteria.
4. Updated Final Safety Analysis Report (UFSAR) Updates - Completion in conjunction with the timelines noted above, but no later than December 31, 2017.

OPC Initiative Milestones
Operating Plants

5. Technical Specifications Updates - Submitted by December 31, 2017, if required.
   a) Most solutions will require a Technical Specifications Bases change to describe the requirement for a functional Open Phase detect / isolate system.
   b) If a Technical Specifications Task Force (TSTF) traveler is available, submittal to adopt the TSTF traveler is planned to be within six months of the issuance of the notice of availability of an NRC-approved TSTF traveler.

This schedule assumes license amendments are not required to install any design changes.

Industry Actions

Industry Actions

- February 2012 - Posted OE 35219, documenting the Byron event on the INPO website
- February 2012 - Industry briefing via INPO webcast to alert the industry to the vulnerability
- February 2012 - INPO issued Level 2 IER; industry responses by August 2012
- On-going - NEI working group weekly meetings to evaluate vulnerability solutions
- January 2013 - Industry standard ETAP software upgraded to enable single and double open phase conditions
- October 2013 - Industry issues Chief Nuclear Officer approved OPC Initiative
- December 2013 - NEI issued OPC Industry Guidance document
- January 2014 - WANO workshop on open phase for international plans
- On-going - Many industry workshops and NRC public meetings have taken place over the past two years; others are projected
- December 2014 - WANO expected to issue SOER that will drive worldwide actions similar to what is being done in the U.S.

Industry Actions

The many designs and hybrids presented at the industry workshop will address the vulnerability discovered through operating experience and ensure that an OPC on the transmission system feeds to a station do not result in the coincident failure of the onsite electric power system or prevent it from performing its safety function. Five different design solutions were presented along with blended designs:

- Transformer High-side Detection with Magnetic Sensors (PCS2000)
- Transformer High-side Detection with Programmable Relay (Exelon)
- Transformer High-side Detection with Optical Sensors (Alstom)
- Class 1E Bus ABB 60Q Phase Unbalance Relay (TVA)
- Transformer Neutral Injection Detection (EPRI, PssTech)
- Blended / Hybird Design using two solutions

Open Phase Initiative Update

Questions ??

ELECTRIC POWER RESEARCH INSTITUTE

EPRI Open-Phase Detection (OPD)

Bob Arritt / Wayne Johnson
Project Manager - Power Systems Studies / NMAC Sr. Project Manager

December 4, 2014

EPRI Research – Initial Projects

- Address many of the technical issues associated with detecting an open-phase condition of a station auxiliary transformer (SAT)
  - Identified difficulty in detecting event during a <u>low or no-load level state</u>.
  - Low and no-load condition is the prevalent condition for most SATs.

Released <u>4</u> publicly available documents on the open-phase issue since the Byron event.

ELECTRIC POWER RESEARCH INSTITUTE

Problem Description

- Transformers with wye connected primaries that have a zero-sequence impedance path i.e. secondary/tertiary delta or 3-legged core

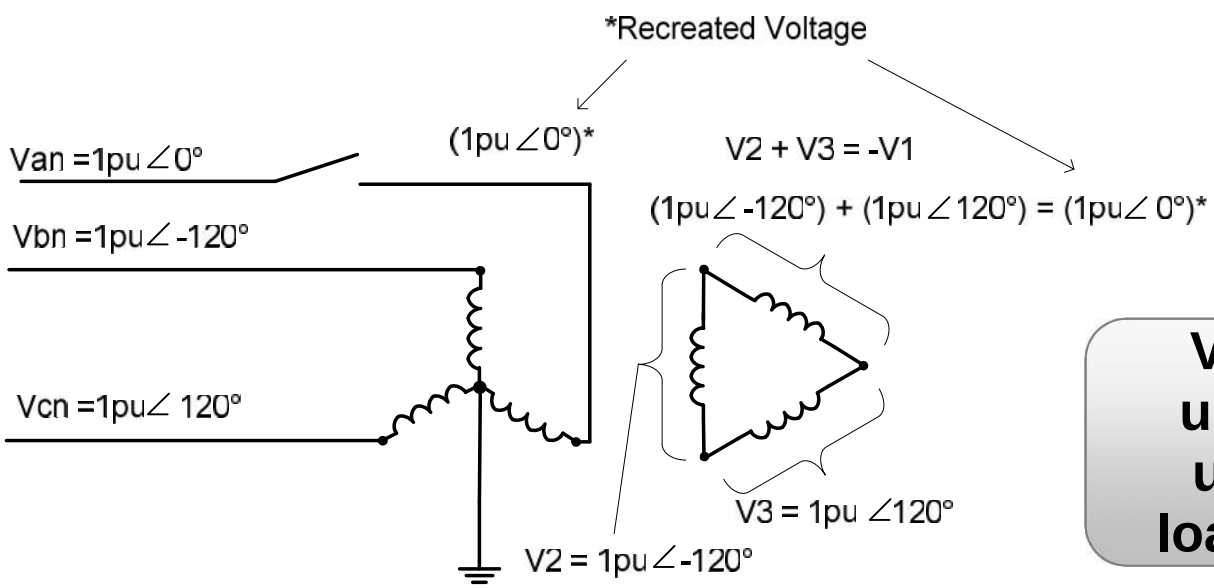

Voltage remains undistorted even under moderate loading conditions

ELECTRIC POWER RESEARCH INSTITUTE

Problem Transformers (No Load)

- Phase A opened on high side

Identified which transformer types exhibited this issue

	Primary Voltage (pu)			Secondary Voltage (pu)		
	Phase A	Phase B	Phase C	Phase A	Phase B	Phase C
Wye-Wye (Shell Core)	**0**	1.0	1.0	**0**	1.0	1.0
Wye-Wye (3-Single Phase Cores)	**0**	1.0	1.0	**0**	1.0	1.0
Wye-Wye* (5-Legged Core)	**0.54**	1.0	1.0	**0.54**	1.0	1.0
Delta-Wye (Any Core Type)	**0.5**	1.0	1.0	**0.5**	1.0	**0.5**
Wye-Delta (Any Core Type)	1.0	1.0	1.0	1.0	1.0	1.0
Wye-Wye (3-Legged Core)	1.0	1.0	1.0	1.0	1.0	1.0
Wye-Delta-Wye (Shell Core with Buried Delta)	1.0	1.0	1.0	1.0	1.0	1.0

EPRI ELECTRIC POWER RESEARCH INSTITUTE

Industry Survey of Detection Methods

- Voltage Imbalance
  - Works for some transformer types for all loading conditions.
  - For susceptible transformers:
    - Cannot detect whether or not the electrical system provides sufficient capacity.
- Sequence-Current Detection
  - Acceptable for loaded conditions; however, would not work at moderate, low, or no-load.
- Phase-Current Detection
  - Very complex, costly, and unreliable design due to measuring low level currents in presence of backfeed and system noise.
- Power Line Carrier Capacitive-Coupled Method
  - Cannot obtain 100% coverage
  - Installation cost was a concern

Researched multiple solution approaches.

ELECTRIC POWER RESEARCH INSTITUTE

Industry Survey of Detection Methods, cont.

- Voltage imbalance relaying
  - No indication of system capacity.

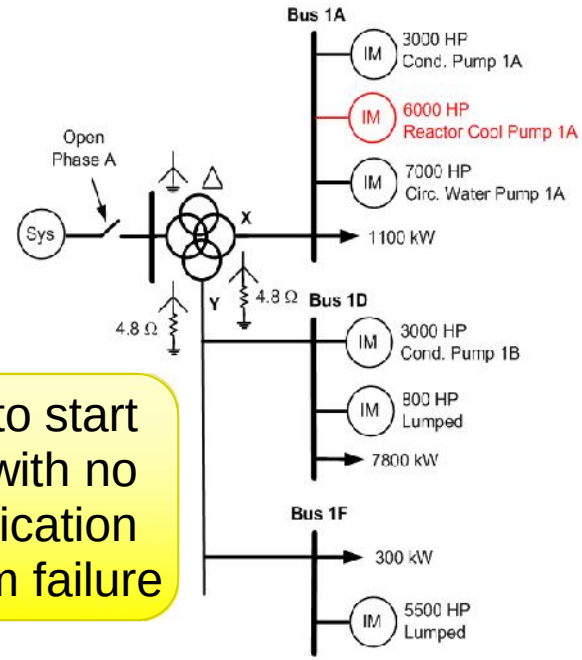

Unable to start motors with no prior indication of system failure

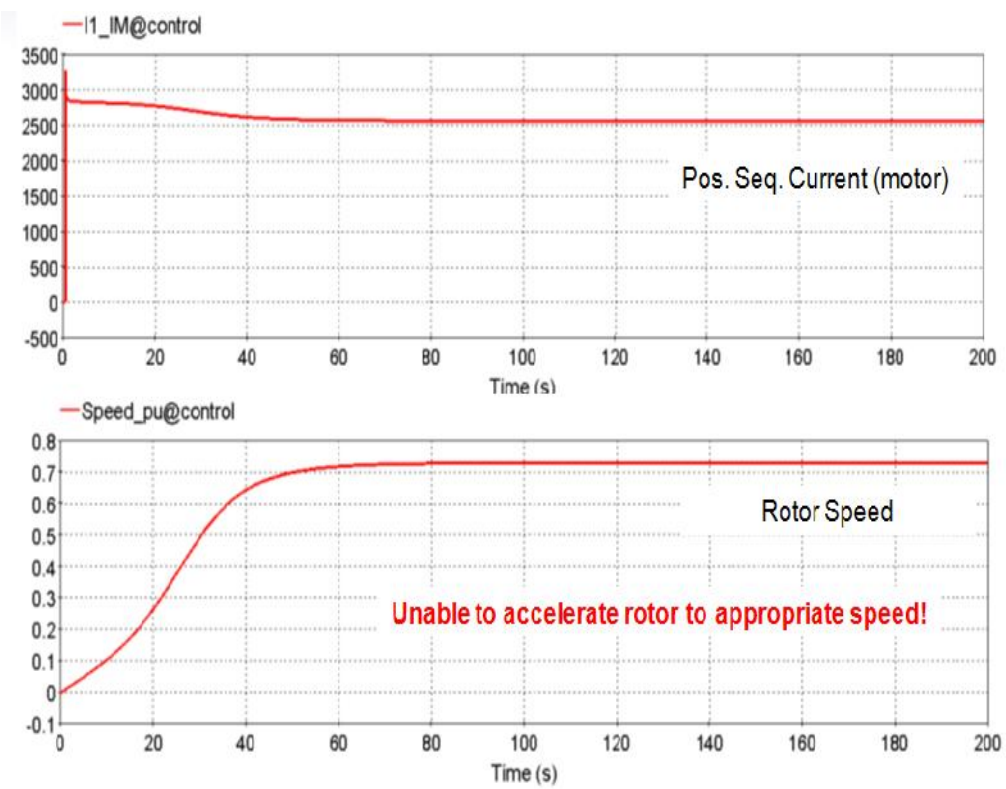

Negative Sequence Voltage on X & Y Bus = V2/V1 =2%

	I0 (%I1)	I2 (%I1)
X	0.0	2%
Y	0.0	7%

ELECTRIC POWER RESEARCH INSTITUTE

Industry Survey of Detection Methods, cont.

Very complex and unreliable design

- Phase-Current Detection
  - Custom high voltage CTs would have to be designed.
  - In the presence of an open phase, this detection method becomes very difficult due to back-fed current.
  - Directional current sensing at these low magnitudes would be unreliable.

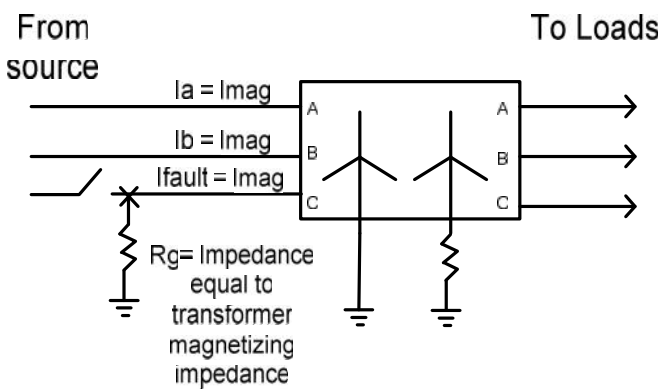

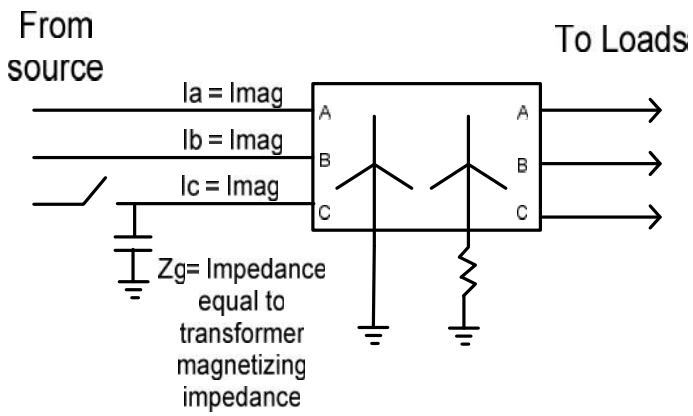

ELECTRIC POWER RESEARCH INSTITUTE

Industry Survey of Detection Methods, cont.

- Power Line Carrier Capacitive-Coupled Method
  - This method was dismissed because the technique left gaps where the conductor was not protected.

Cannot achieve 100% coverage

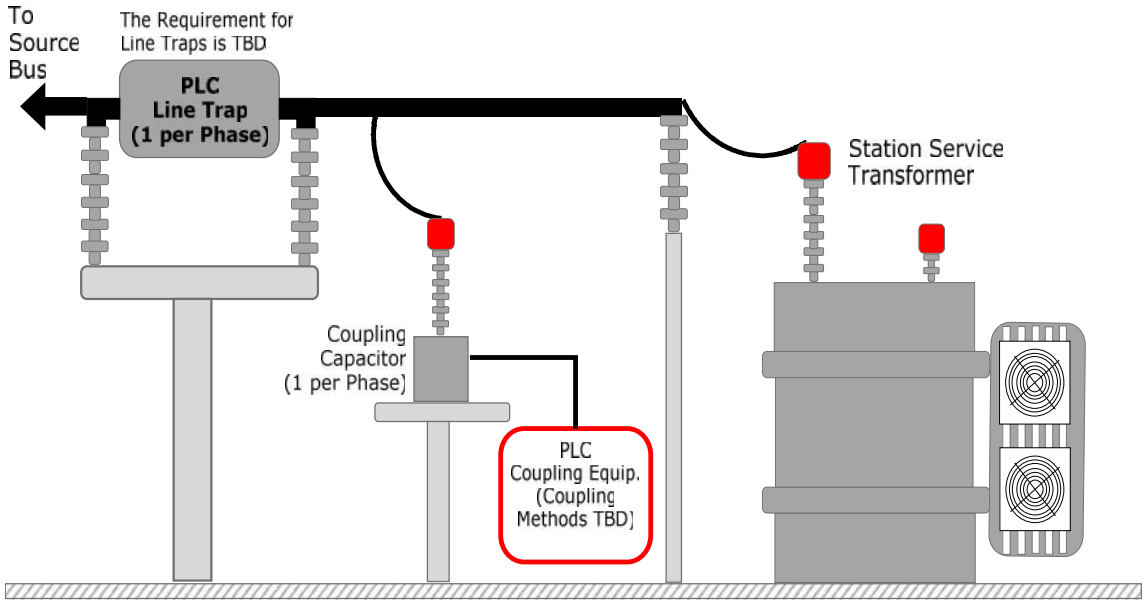

ELECTRIC POWER RESEARCH INSTITUTE

EPRI Open Phase Detection

- Transformer Neutral Detection/Injection
  - Takes advantage of the known characteristics of the transformer.
  - To exploit these results in developing an open-phase detection scheme, a transformer neutral current injection/detection method was developed.
    - Proved theory with lab testing and extensive modeling in early 2013
    - Provide Webcast in November 2013
    - Field Tested in May 2014
    - Released EPRI Technical Document in 2014 – 3002004432

Transformer Neutral Injection

Immune to normal system imbalances

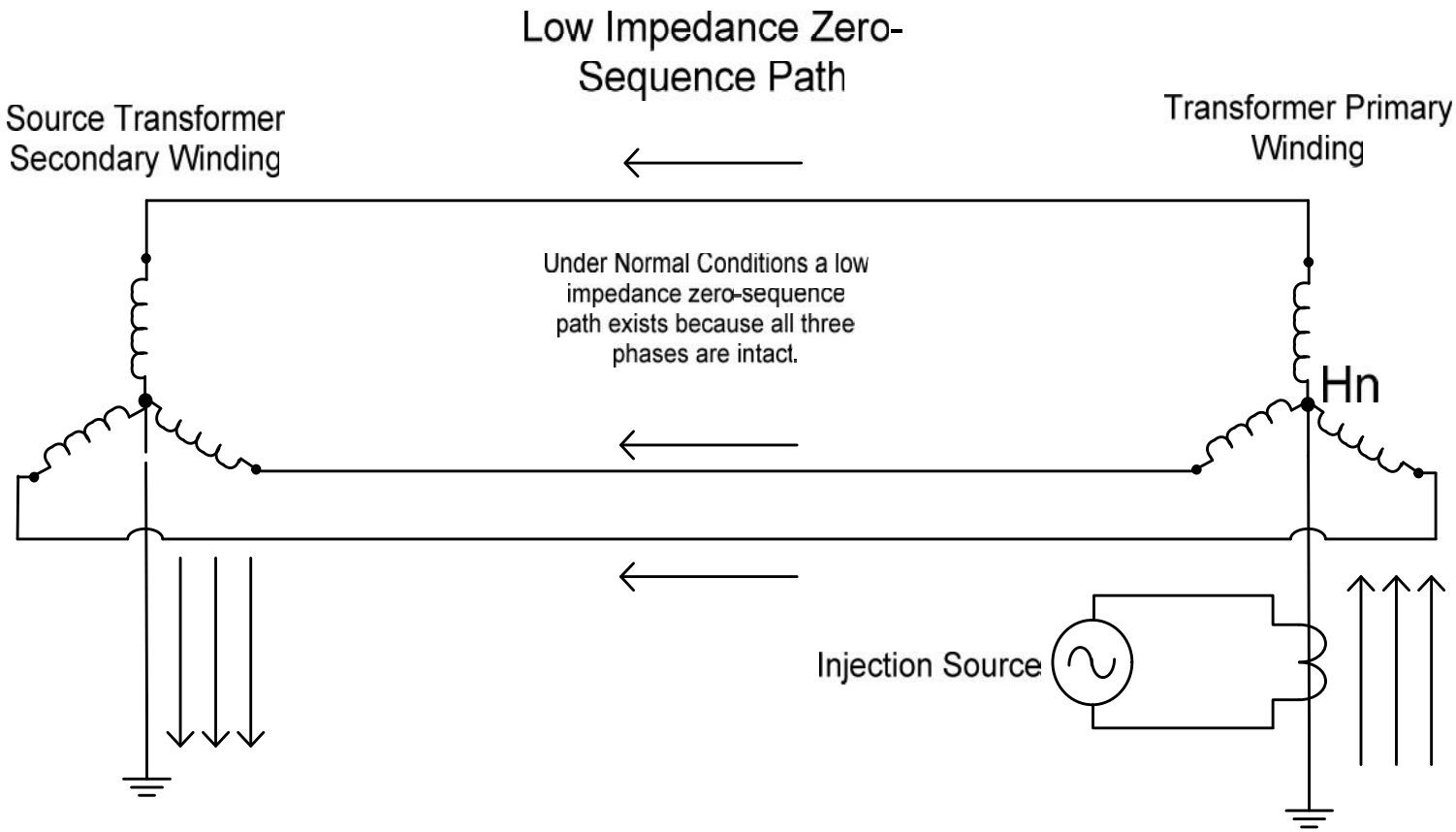

ELECTRIC POWER RESEARCH INSTITUTE

Transformer Neutral Injection

Detects an open phase condition reliably

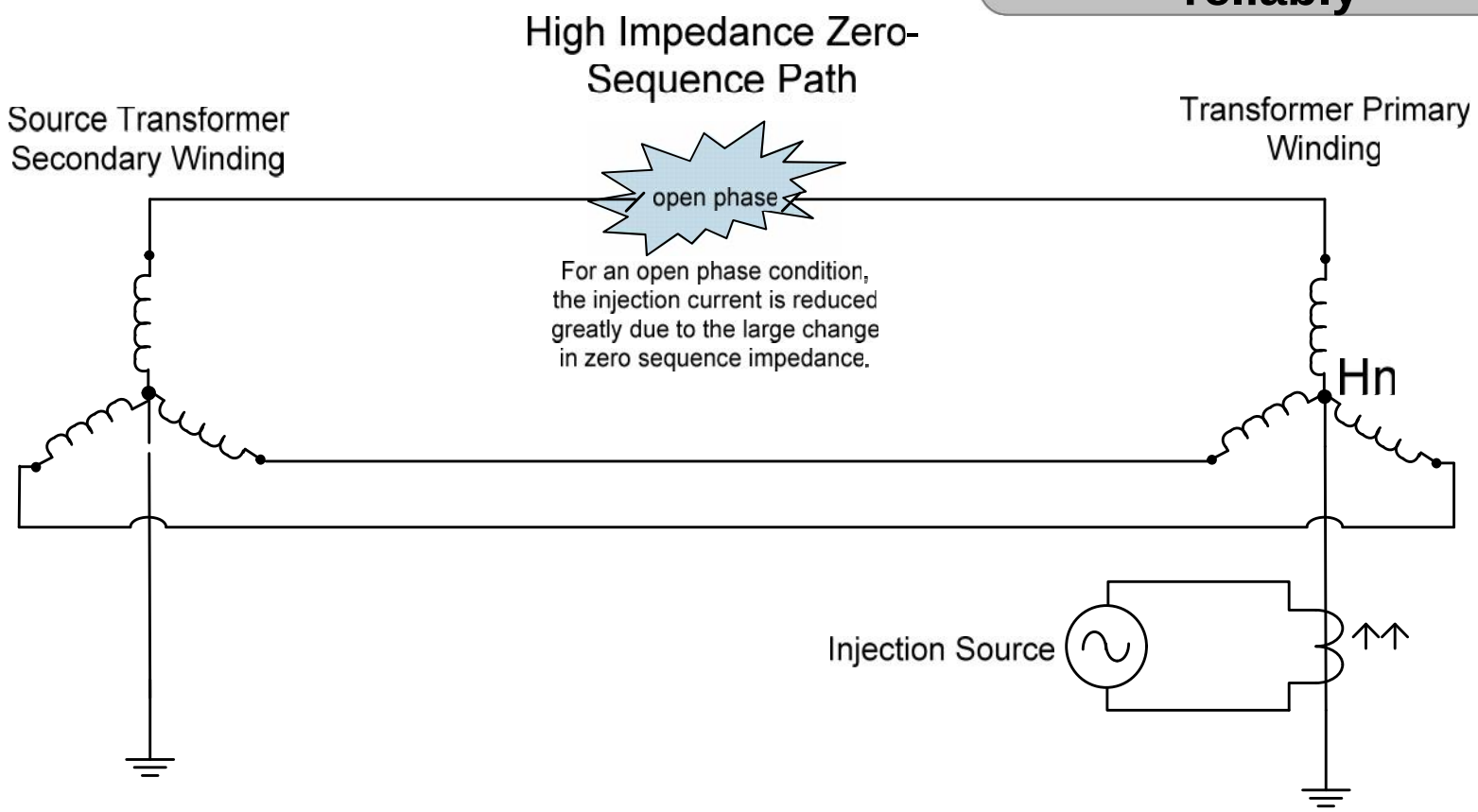

ELECTRIC POWER RESEARCH INSTITUTE

Open Phase with Ground Fault

- Design to detect:
  - Any phase open
  - Any phase opened and solidly grounded or impedance grounded (any impedance)
  - Any two phases opened
  - Any two phases opened, one or both which are solidly grounded or impedance grounded (any impedance)

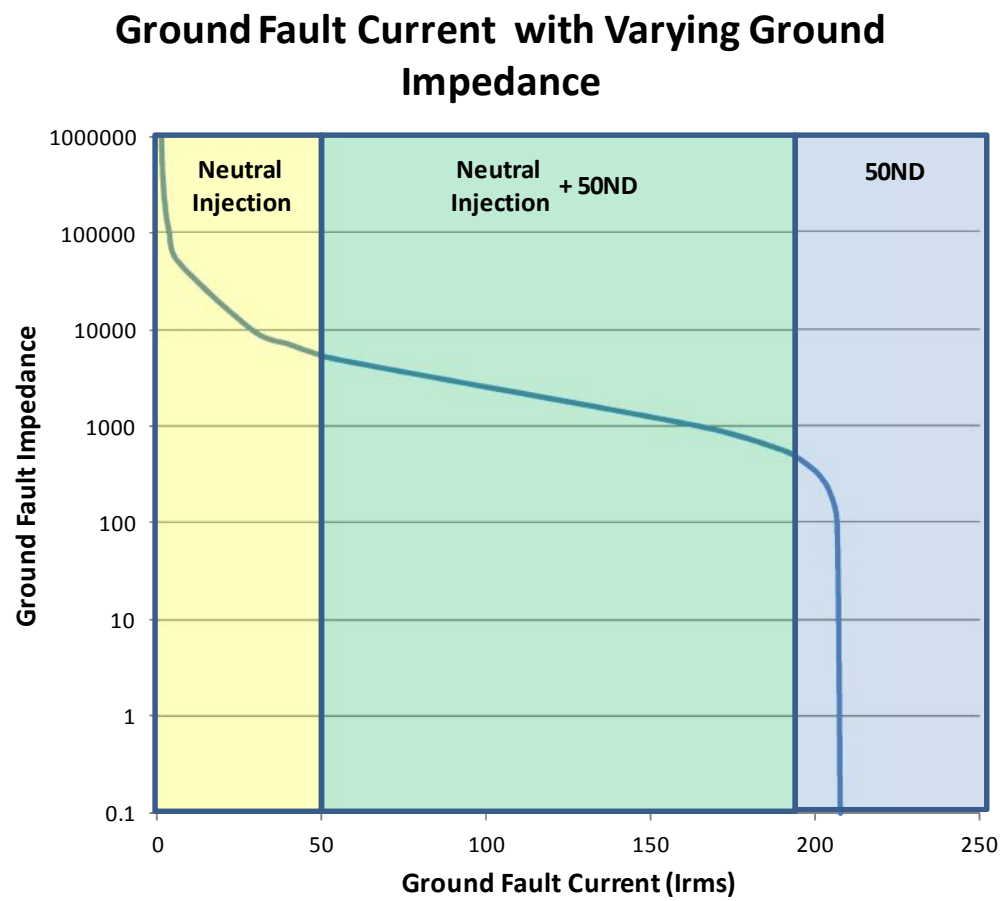

System designed to have no blind spots

ELECTRIC POWER RESEARCH INSTITUTE

Neutral Detection/Injection

- Combined the neutral detection along with neutral injection to provide a robust/secure detection system.
  - Benefits of active detection
    - Allows for a fail safe and redundant detection design.
    - Allows for a system test scheme to monitor all major system components.
    - Only requires monitoring of a change in signal level.
    - Active protection is the preferred method over passive only protection.
- Design meets all project constraints and goals.
- Uses all commercial-off-the-shelf components.
  - Reduces cost and lead times
  - Minimal maintenance
  - Easily replaced parts to reduce downtime

Drastically reduces modeling and analysis required

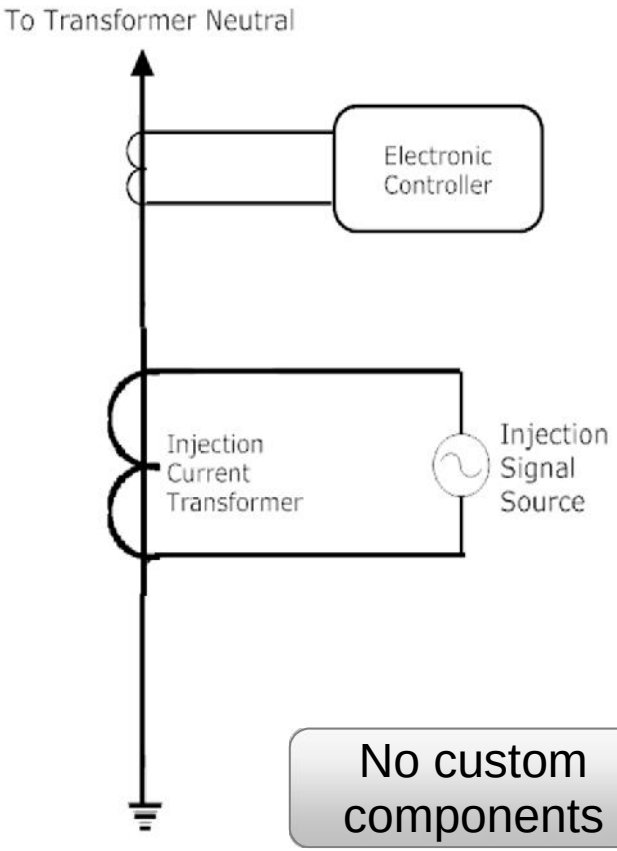

No custom components

ELECTRIC POWER RESEARCH INSTITUTE

Open Phase Detection Implementation, cont.

- Installation utilizes neutral conductor only.
  - Requires minimal outage time and minimal maintenance
  - Designed for ease of installation
  - No seismic concerns for transformer's high voltage bushings
  - Much lower fault current level exposure compared to phase conductors
  - Less exposure to lightning
  - No impact on the BIL, creepage, and clearance of the transformer's high voltage bushings

Field Demonstration

- Conducted at Bellefonte Nuclear Plant in May 2014
- First ever open phase field test
  - TVA opened a 161 kV conductor to a 36 MVA Station Auxiliary Transformer (SAT).
  - Various plant buses were loaded during the test
- Test was witnessed by many
  - TVA Personnel
  - NRC Staff
  - INPO
  - Several AE firms

Field Demonstration – Successful Detection

- Successfully detected an open-phase event under no-load and loaded conditions.

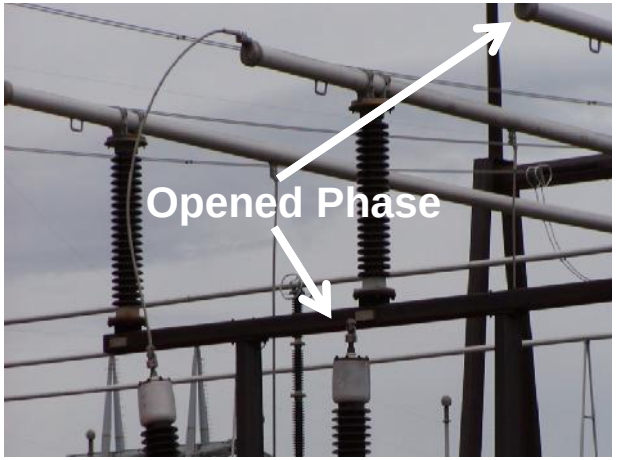

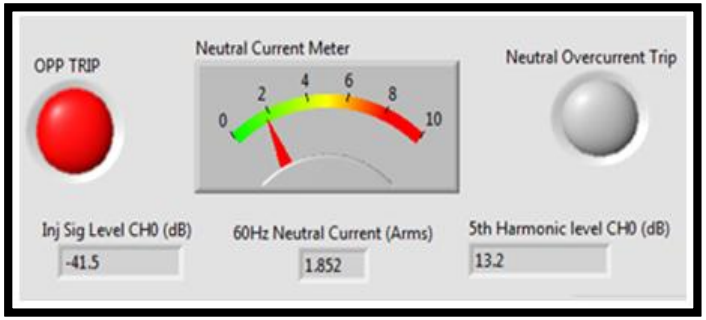

Only information had before test was transformer nameplate data

Performed as predicted.

ELECTRIC POWER RESEARCH INSTITUTE

Completed Steps

- Construct prototype for field testing ✓
- Laboratory demonstration meeting ✓
- Choose a representative field test site ✓
- Complete field testing ✓
- Complete commercial licensing ✓

ELECTRIC POWER RESEARCH INSTITUTE

Questions

ELECTRIC POWER RESEARCH INSTITUTE

Together…Shaping the Future of Electricity

U.S.NRC

UNITED STATES NUCLEAR REGULATORY COMMISSION

Protecting People and the Environment

OPEN PHASE CONDITIONS IN ELECTRIC POWER SYSTEM – STAFF POSITIONS AND PATHFORWARD

G. Singh Matharu
Electrical Engineering Branch
Division of Engineering
Office of Nuclear Reactor Regulation

December 4, 2014

AGENDA

- Open Phase Condition (OPC)
- Operating Experience
- Connections
- Regulatory Requirements
- NRC Actions
- Staff Position
- Draft Branch Technical Position (BTP 8-9)
- Path Forward

OPC

- **Loss of one of the three phases** of the offsite power circuit on the high voltage side of a transformer connecting an offsite power circuit to the transmission system coincident with or without a high-impedance ground fault; or
- **Loss of two of the three phases** of the offsite power circuit on the high voltage side of a transformer connecting an offsite power circuit to the transmission system
- **Creates Unbalance in AC power system** (sequence voltages and currents)
  - Transformer winding configuration (Wye-Wye-Wye, Delta-Wye-Wye, Wye-Delta-Delta, Wye-Wye-Buried Tertiary Delta, Delta-Wye, Wye- Delta, Wye-Wye-Delta, and Wye-Wye with Delta stabilizing winding)
  - Grounding (solid or resistance ground)
  - Type of transformer core (Shell or Core)
  - Loading condition and operating configuration (standby/no load/lightly loaded)
  - Phase angle shift
  - Reduced starting torque for motors
  - Overheating of motors/overload/loss of life/damages to rotating machines
  - Protective device actuation and lock out

OPC (Cont.)

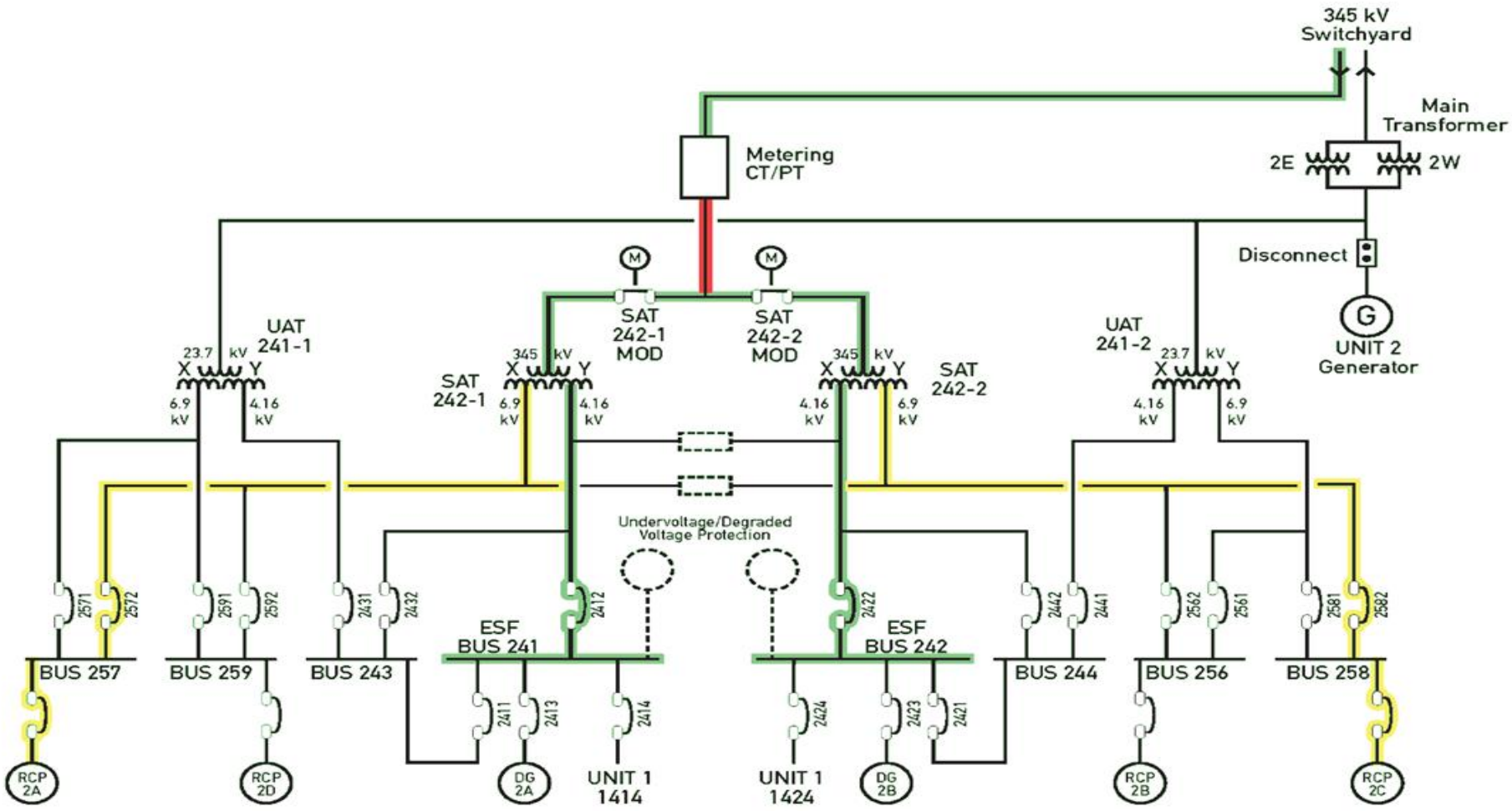

BYRON UNIT 2
Electrical Distribution

OPC (Cont.)

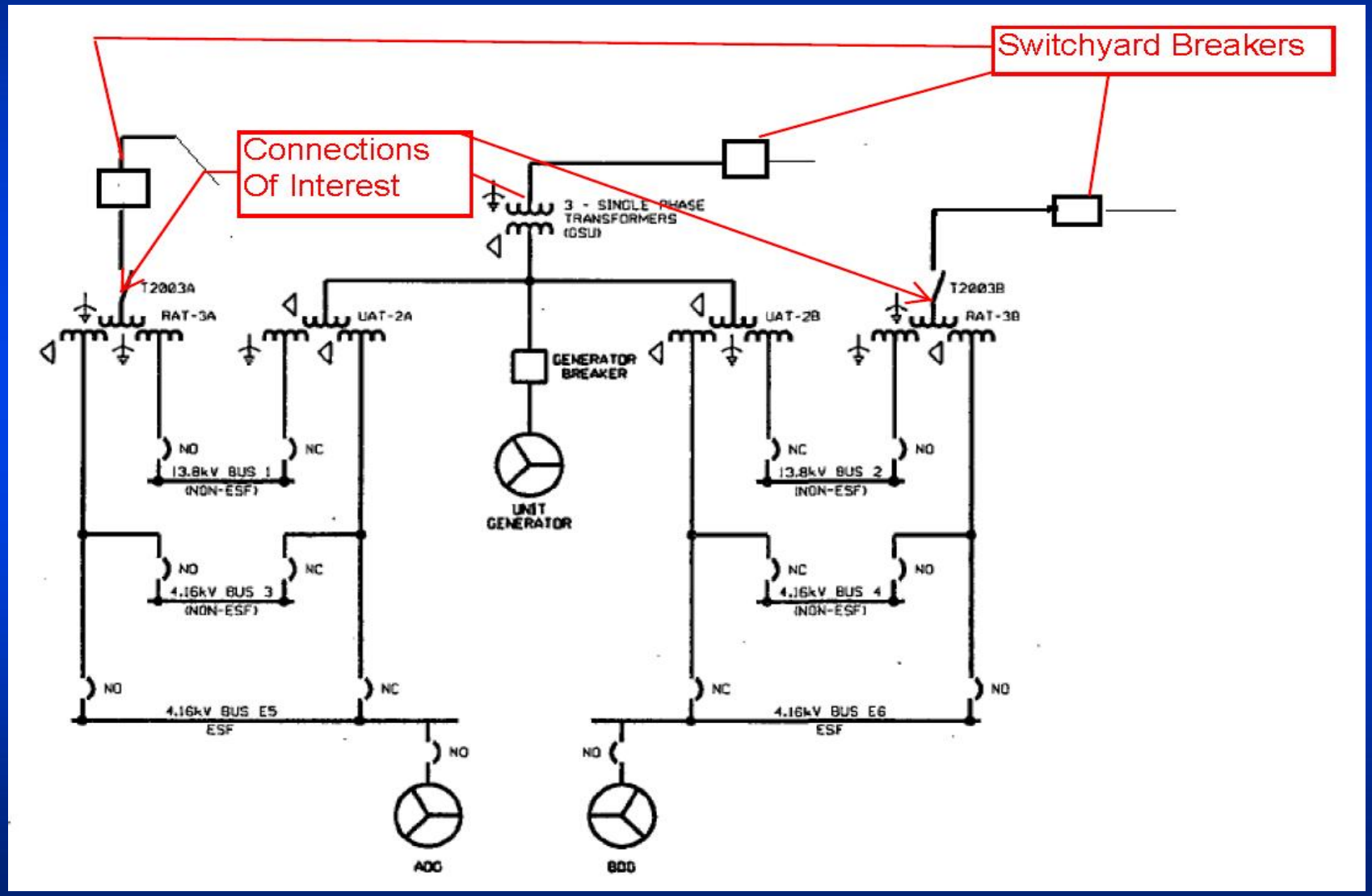
Switchyard Breakers
Connections Of Interest
3 - SINGLE PHASE TRANSFORMERS (OSU)
T2003A
RAT-3A
UAT-2A
GENERATOR BREAKER
UAT-2B
T2003B
RAT-3B
NO
NC
13.8kV BUS 1 (NON-ESF)
13.8kV BUS 2 (NON-ESF)
UNIT GENERATOR
4.16kV BUS 3 (NON-ESF)
4.16kV BUS 4 (NON-ESF)
4.16kV BUS E5 ESF
4.16kV BUS E6 ESF
ADG
BDG

OPERATING EXPERIENCE

- **Eleven operating events (2001-2014)**
  - Failure of insulators and switchyard connections
  - Malfunction of breakers

❖ South Texas Project Unit 2, US – March 1, 2001
❖ Koeberg, South Africa – November 112005
❖ Fitzpatrick/Nine Mile, US – December 19, 2005
❖ Vandellos, Spain – August 9, 2006
❖ Dungeness A, UK – May 14, 2007
❖ Beaver Valley Unit 1, US – November 1, 2007
❖ Byron Unit 2 – January 30, 2012
❖ Byron Unit 1 – February 28, 2012
❖ Bruce Power Unit 1, Canada – December 22, 2012
❖ Forsmark Unit 3, Sweden – May 30, 2013
❖ Dungeness B, UK - April 2014

TYPES OF CONNECTIONS

CONNECTIONS OF INTEREST

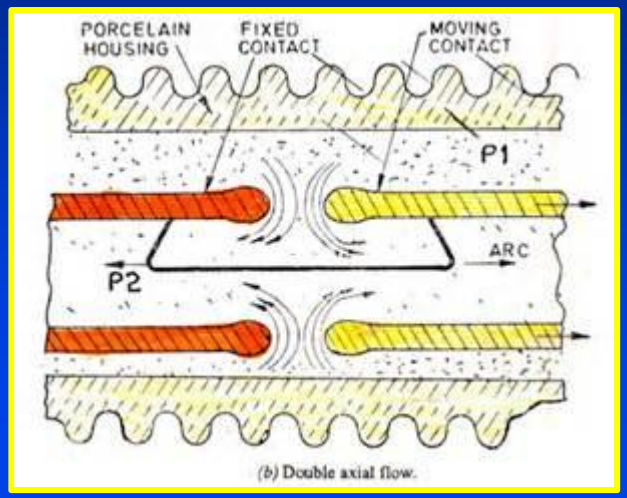

(b) Double axial flow.

REGULATORY REQUIREMENTS

- **General Design Criterion (GDC) 17, "Electric Power Systems," or the applicable principal design criteria in the updated final safety analysis report**

- **Design criteria for protection systems under 10 CFR 50.55a(h)(2) or 10 CFR 50.55a(h)(3)**

- **Technical Specification (TS) requirements**
  - 10 CFR 50.36(c)(2) & (3)
  - TS LCO 3.8.1 – offsite and onsite power systems
  - TS Surveillance Requirements

NRC ACTIONS

- **NRC Special Inspection**[1] at Byron Station
- **Information Notice** 2012-03[2]
- **Bulletin** 2012-01: Design Vulnerability in Electric Power System[3]
- **Summary Report** - documented NRC staff review of licensee responses and staff recommendations[4]
  - All operating nuclear power plants susceptible to OPC except Seabrook Station
    - SF6 insulated Switchyard
    - Single pole breaker failure protection scheme
  - Existing protection schemes based on voltage magnitude cannot identify OPC and take appropriate mitigation measures (i.e., automatically transfer power to ESF buses from an alternate offsite or onsite power source)
  - Staff recommended regulatory action to address the open phase issue
- **Supported development of industry initiative** to resolve OPC
- **Participating in an IAEA effort** to issue a Safety Report and also an IEEE working group to develop a Standard.

1. Agencywide Documents Access and Management System (ADAMS) Accession No. ML12087A213
2. ADAMS Accession No. ML120480170
3. ADAMS Accession No. ML12074A115
4. ADAMS Accession No. ML13052A711

STAFF POSITION

CURRENT Operating Reactors and ACTIVE New Reactor Designs

Must be able to:

1) Detect an open phase condition on the high side of the transformer connected to the offsite power system;
2) Alarm in the main control room; and
3) Automatically Actuate and Mitigate the event.

Bases: The isolation and actuation of onsite power system have to be automatic to satisfy the time criteria specified in Chapter 15 as required by GDC 17 to meet fuel design limits, core cooling and maintaining containment integrity

PASSIVE New Reactor Designs

Must be able to:

1) Detect an open phase condition on the high side of the transformer connected to the offsite power system; and
2) Alarm in the main control room.

Bases: Design Certification requires, in accordance with GDC 17, onsite AC power distribution system to be powered from either from one offsite circuit or onsite diesels for all modes of operation, including during a safe shutdown, and the offsite circuit serves a defense-in-depth function for maintaining reactor safety and charging safety-related batteries.

STAFF'S POSITION (Cont.)

Licensee solution (Class 1E or non-Class 1E) to address OPCs, should meet the following functional requirements:

- The design should address single failure criteria as outlined in the GDCs or the principal design criteria specified in the updated final safety analysis report for the specific nuclear power plant (i.e., for an OPC, a non-Class 1E circuit should not preclude the onsite electrical power system from being able to perform its safety function given a single failure in the onsite power system).
- The OPC should be automatically detected and alarmed in the main control room under all operating electrical system configurations and loading conditions
- If offsite power circuits are degraded due to OPC, the power source should be transferred automatically to the onsite power system within the time assumed in the accident analysis and without actuating any protective devices, given a concurrent design basis event.
- TS Surveillance Requirement and Limiting Condition of Operation for equipment used for mitigation of OPC should be consistent with the operability requirements specified in the existing plant TSs.

DRAFT BRANCH TECHNICAL POSITION (BTP 8-9)

- OPC is a credible event of safety significance and must be considered in the electric power system design for nuclear power plants
- The purpose of this BTP is to provide guidance to the staff in reviewing future licensing actions related to OPCs in electric power systems
- Single OPC with and without high impedance ground fault conditions and two OPCs (without ground fault) considered for resolution of OPC
- Design criteria specified for both operating and new reactor fleets

PUBLIC COMMENTS

- Many comments related to **clarifying the guidance in BTP**

- **Key comments:**
  - Protection system requirements (10 CFR 50.55a(h)(2) or (3)) are not required
  - Class 1E detection and actuation circuits are not appropriate
  - The treatment of OPC is beyond current plant design and licensing basis
  - 10 CFR 50.36, “Technical specifications,” is not applicable to OPC
  - Existing plants comply with GDC requirements
  - GDC 17 requirements do not apply to passive plant designs (AP1000)
  - Passive plant designs (AP1000) do not require AC power sources to mitigate design-basis events

PATH FORWARD

- Staff provided response to NEI regarding regulatory requirements for OPC Detection and Isolation (See ADAMS Accession Package No. ML14120A196)

  To continue the NRC and industry's efforts to resolve and close-out Bulletin 2012-01, each licensee should do the following:

  - Provide a Commitment letter to the NRC stating that the OPC issue will be resolved in accordance with the schedule established in the industry initiative and how the solution addresses GDC 17 or the principal design criteria specified in the updated final safety analysis report for their specific nuclear power plant
  - Develop and maintain detailed a plant-specific analysis and documentation which established the resolution of the OPC design vulnerability, including failure mode analysis that is available for NRC staff's audits or inspections
  - Provide a close-out letter to the NRC when full compliance is achieved

U.S.NRC
UNITED STATES NUCLEAR REGULATORY COMMISSION
Protecting People and the Environment

QUESTIONS ?