Official Transcript of Proceedings

NUCLEAR REGULATORY COMMISSION

Title: Advisory Committee on Reactor Safeguards
Fukushima Subcommittee

Docket Number: (n/a)

Location: Rockville, Maryland

Date: Thursday, November 20, 2014

Work Order No.: NRC-1230 Pages 1-607

NEAL R. GROSS AND CO., INC.
Court Reporters and Transcribers
1323 Rhode Island Avenue, N.W.
Washington, D.C. 20005
(202) 234-4433

1 UNITED STATES OF AMERICA

2 NUCLEAR REGULATORY COMMISSION

3 + + + + +

4 ADVISORY COMMITTEE ON REACTOR SAFEGUARDS

5 (ACRS)

6 + + + + +

7 FUKUSHIMA SUBCOMMITTEE

8 + + + + +

9 THURSDAY

10 NOVEMBER 20, 2014

11 + + + + +

12 ROCKVILLE, MARYLAND

13 + + + + +

14 The Subcommittee met at the Nuclear

15 Regulatory Commission, Two White Flint North, Room

16 T2B1, 11545 Rockville Pike, at 8:30 a.m., Stephen P.

17 Schultz, Chairman, presiding.

18

19

20

21

22

23

24

25

1 COMMITTEE MEMBERS:
2 STEPHEN P. SCHULTZ, Subcommittee Chairman
3 RONALD G. BALLINGER, Member
4 DENNIS C. BLEY, Member
5 CHARLES H. BROWN, JR. Member
6 MICHAEL L. CORRADINI, Member
7 HAROLD B. RAY, Member
8 JOY L. REMPE, Member
9 PETER C. RICCARDELLA, Member
10 MICHAEL T. RYAN, Member
11 GORDON R. SKILLMAN, Member
12 JOHN W. STETKAR, Member
13
14 ACRS CONSULTANT:
15 WILLIAM J. SHACK*
16
17 DESIGNATED FEDERAL OFFICIAL:
18 MICHAEL R. SNODDERLY
19
20
21
22
23
24
25

1 ALSO PRESENT:
2 EDWIN M. HACKETT, Executive Director
3 PHIL AMWAY, Nine Mile Point
4 STEWART BAILEY, NRR
5 SCOTT BAUER, NEI
6 JEREMY BOWEN, NRR
7 ERIC BOWMAN, NRR
8 DAN BRUSH, Exelon
9 JACK DAVIS, NRR
10 GENE EIMAR, Palo Verde
11 KURT FLAIG, Dominion
12 BRYAN FORD, Entergy
13 JOHN GIDDENS, Southern Nuclear
14 TOM JACKSON, Rizzo Associates*
15 DAVID LLEWELLYN, Duke Energy
16 MIKE POWELL, Palo Verde
17 BILL WEBSTER, Dominion
18 *Present via telephone
19
20
21
22
23
24
25 T-A-B-L-E O-F C-O-N-T-E-N-T-S

1 Opening Remarks and Objectives
2 Stephen Schultz.....5
3 Industry Experience With Order EA-12-049
4 Scott Bauer.....10
5 Gene Eimar.....12
6 Industry Experience With Order EA-12-049
7 Scott Bauer.....218
8 Dan Brush.....218
9 NRC Review Methodology for Evaluating Licensee
10 Responses to Order EA-12-049
11 Jack Davis.....271
12 Jeremy Bowen.....273
13 Industry Plans for Addressing Confirmatory and
14 Open Items.....365
15 Adjourn
16
17
18
19
20
21
22
23

1 P-R-O-C-E-E-D-I-N-G-S

2 8:32 a.m.

3 CHAIRMAN SCHULTZ: This meeting will now
4 come to order. This is a two-day meeting of the
5 Advisory Committee on Reactor Safeguards, the
6 Fukushima Subcommittee.
7 I'm Stephen Schultz, Chairman of the
8 Subcommittee. Members in attendance today are Pete
9 Riccardella, Ron Ballinger, Dick Skillman, Harold Ray,
10 Dennis Bley, John Stetkar, Michael Ryan, Joy Rempe and
11 Mike Corradini. Our consultant from our ACRS
12 Chairman, Dr. Bill Shack, is on the line.
13 The purpose of today's meeting is to
14 discuss industry and staff experience in implementing
15 Order EA-12-049, order modifying licenses with regard
16 to requirements for mitigation strategies for
17 beyond-design-basis external events.
18 Today's discussions will assist in
19 preparing the Subcommittee for our agenda tomorrow.
20 That will include our review of two related activities:
21 The NRC staff and industry will discuss first the
22 staff's preliminary proposed rule language for the
23 mitigation of beyond-design-basis events rulemaking.
24 And then the staff's draft white paper on the
25 integration of mitigation strategies for

1 beyond-design-basis external events with the
2 reevaluation of flooding hazards.
3 Mr. Mike Snodderly is the designated
4 federal official for this meeting.
5 We've received no written comments.
6 We have arranged for Dr. Ed Lyman of the
7 Union of Concerned Scientists to make an oral statement
8 to the Committee which has been scheduled for tomorrow
9 afternoon.
10 This meeting is open to the public and with
11 the exception of portions that may be closed, if
12 necessary, to protect information that is unclassified
13 safeguards information pursuant to 5 U.S.C.
14 522B(c)(3), it is our understanding that today's
15 presentations and its material does not contain such
16 information. We're going to rely upon the presenters
17 to notify us if our questions may stray into material
18 which may contain unclassified safeguards information.
19 We do not want that material to be disclosed. If we
20 run into questions that may pursue that discussion, we
21 can establish a closed session within the meeting.
22 The Subcommittee intends to gather
23 information, analyze relevant issues and facts and
24 formulate proposed positions and actions as
25 appropriate for deliberation by the Full Committee.

1 Rules for the conduct of and the
2 participation in this meeting have been established in
3 the *Federal Register* as part of the notice for this
4 meeting.
5 A transcript of the meeting is being kept
6 and will be made available as stated in the *Federal*
7 *Register* notice. Therefore, we request that when
8 addressing the Subcommittee all participants will use
9 microphones that are located throughout the meeting
10 room. All participants should first identify
11 themselves and speak with sufficient clarity and volume
12 so that they may be readily heard. Also, we now request
13 you to silence your cell phones or any other electronic
14 devices that may disrupt the meeting. I
15 understand that there are individuals on the bridge
16 line who are listening in on today's proceedings. To
17 effectively coordinate their participation in this
18 meeting we will be placing the incoming bridge line on
19 mute so that those individuals may listen in during the
20 discussions. At appropriate times later in the
21 meeting we will provide the opportunity for public
22 comment from individuals on the bridge line, as well
23 as from members of the public in attendance.
24 We'll now proceed with the meeting. And
25 I want to go over the agenda briefly again to just

1 describe at some level of detail what we're intending
2 to do today.
3 Today we have the discussion from members
4 of the industry regarding mitigating strategies in
5 response to the direction that was provided by the
6 Commission in 2012. The industry and the NRC staff
7 have been working together to move forward on
8 implementing these strategies and developing the
9 processing of doing so. We're going to hear about that
10 today first from the industry. Then we will hear from
11 the staff about their views on how this overall program
12 is progressing.
13 Tomorrow, as I indicating in the opening
14 remarks, we're going to be discussing the next stage
15 of the program, which is rulemaking to codify the
16 process that will be used to move forward and set a
17 regulatory program in place to establish this within
18 the overall regulatory framework.
19 There are some other issues that we will
20 be discussing tomorrow. As I indicated, there are some
21 policy issues associated with how mitigating
22 strategies can be utilized, will be utilized with
23 regard to determining how regulatory policy will be
24 established for issues such as the beyond-design-basis
25 events such as flooding or seismic events. We also are

1 going to be discussing various viewpoints associated
2 with the implementation of mitigating strategies in the
3 future.
4 We'll now proceed with the meeting today.
5 I'm going to call on Scott Bauer of the Nuclear Energy
6 Institute to open the presentations today and focusing
7 on the ongoing development and implementation
8 strategies.
9 Scott, some members of the Committee over
10 the past two years have seen mitigating strategies at
11 the plant sites. We have visited the Peach Bottom site
12 as a Full Committee to meet with the staff there last
13 year. And this year we met with the staff at Palisades
14 in Region III. This is the first opportunity the
15 Committee has had to see the progress that's made its
16 way to this point, so we're looking forward to the
17 presentations today.
18 As you and the panelists make your
19 presentations this morning, if you could first
20 introduce yourself, your position, a few sentences of
21 your background and what you're going to be presenting
22 today as an introduction to the Committee, I would
23 appreciate that.
24 So, Scott, why don't you begin?
25 MR. BAUER: Okay. Thank you. Again, my

1 name is Scott Bauer. I'm a loaned employee at NEI from
2 Palo Verde Nuclear Generating Station via the STARS
3 Alliance. I was actually at NEI during the time of the
4 Fukushima event and was asked to be the project manager
5 for FLEX or mitigating strategies. And when I went
6 back to Palo Verde in July of last year, I retained that
7 role. So I'm basically a virtual loaned employee at
8 NEI continuing in the role as FLEX project manager.
9 So what we're going to do this morning,
10 first of all, through the years that we've been doing
11 this, we've been surrounded by a team of very talented
12 industry people, some of which are sitting here before
13 you today and some of which are in the audience out
14 there. So we've had some of the best in the industry
15 working on this issue and we believe we've developed
16 a process and a product that is going to serve us very
17 well going forward.
18 So what we're going to do today is -- to
19 my right is Gene Eimar. He's a shift manager at Palo
20 Verde. He's going to give us a depiction of what this
21 event would look like, an extended loss of AC power
22 event would look like from a control room standpoint
23 and actually walk through the event and how the
24 procedures would be deployed in the case of the event.
25 So that will give you kind of a hands-on look at what

1 it would actually look like if this were to occur.
2 Next Bill Webster, who's from Dominion.
3 He is the Fukushima lead there. And they just
4 implemented at the North Anna plant, so he's going to
5 talk about the experience of actually implementing the
6 strategy and going live with it.
7 Similar, Mike Powell will be up here
8 probably after the break and he's from Palo Verde.
9 He's the Fukushima lead there. And similarly they are
10 now live with the strategy at Unit 1 at Palo Verde.
11 Phil Amway is from Nine Mile Point. He's
12 going to give us -- so Bill is going to talk about what
13 it looks like to implement this involving the
14 strategies, the modifications, training, all the
15 aspects of it. Phil is going to talk about the
16 differences between a BWR and a PWR, essentially what
17 the differences are and the implementation for that.
18 And then finally we'll have a presentation
19 by Dan Brush, who is the lead for our implementation
20 of our National SAFER Response Centers.
21 So we have an ambitious schedule here;
22 there's quite a few slides involved, but I think as we
23 go through this hopefully we'll be able to make it
24 through all these presentations. We do have a couple
25 of videos that we might stick in here at points in time

1 that show some of the validation activities at Palo
2 Verde. And then we have one of a control room exercise
3 where they actually did an extended loss of AC power
4 event at a BWR control room that we would include in
5 here if we have the time to do that.
6 So that's essentially the flow we're going
7 to go through this morning.
8 CHAIRMAN SCHULTZ: I did want to interrupt
9 you just for a moment and indicate to members in the
10 discussion on the bridge line that we did not have the
11 slides available online this morning. If you would
12 like to get a copy of this morning's slides, I would
13 request that you email Michael Snodderly,
14 M-I-C-H-A-E-L, dot, S-N-O-D-D-E-R-L-Y, @nrc.gov. And
15 over the course of the morning Mike can provide you
16 those slides. Thank you.
17 Scott, sorry for the interruption, but go
18 ahead.
19 MR. BAUER: No problem. Gene?
20 MR. EIMAR: My name is Gene Eimar. I'm a
21 shift manager at Palo Verde. Next month is my 33rd year
22 at Palo Verde, so I've got several years experience at
23 the station. I got my first senior reactor operator
24 license at a Westinghouse four-loop PWR in 1976 and my
25 license at Palo Verde in 1985. Been a shift manager

since 1978. So lot of control room time.

So this morning I'm going to talk about Palo Verde FLEX strategies that we developed to respond specifically to the Palo Verde System 80 plant.

So I'm going to talk about the FLEX Support Guideline implementation, Extended Loss of All Site AC Guideline and we'll look at a couple of the appendices that we have included in our AC Guideline. And this would -- FLEX Support Guideline is one of the common terms, or FSGs, for that.

So we looked at the definition that was provided by NEI-12-06 for what the event specifically was. We had an undefined external event that occurred which resulted in a loss of off-site power. We had a successful reactor trip with all control element assemblies being inserted into the core. We had a failure of all on-site AC sources to function. So none of the emergency diesel generators at Palo Verde, which we have six, functioned for this event. And at Palo Verde we rely on station blackout generators, and those generators were unavailable for the event, which left us with no 4160 class power, no 480-volt class power and no non-class power.

Per the NEI guidance there were no other equivalent failures. We had no other event in

1 progress, so no loss of coolant accidents, excess steam
2 demands, steam generator tube rupture, or any of those,
3 and no security event was in progress at the same time.
4 Those are the rules basically as specified in
5 NEI-12-06.
6 So the first thing that happens in a
7 control room after a reactor trip is the operators at
8 Palo Verde use what's called a standard post-trip
9 action flowchart. We use a diagnostic flowchart.
10 Control room supervisor runs this. The reactor
11 operators are responding to the safety functions in
12 order. So we go through this chart and the control room
13 supervisor looks -- the first thing he looks at is
14 reactor power less than 10 to the minus 1 percent and
15 dropping. Well, with all rods inserted into the core,
16 he's going to respond to this as a yes.
17 The next block he's going to look at, does
18 at least one vital AC and DC train have power? So in
19 this case we won't have power because the 4160 buses
20 are de-energized at Palo Verde. So he would respond
21 with a no.
22 The next one he's going to look at, does
23 at least one vital DC train have power? Palo Verde has
24 four battery trains. All of those would still be
25 energized because the batteries are still available,

1 so he would respond to that with a yes.

2 MEMBER BLEY: Hey, Gene?

3 MR. EIMAR: Yes, sir?

4 MEMBER BLEY: Excuse me just a second.

5 You've been using this kind of flowchart arrangement

6 all along, is that right, or is this --

7 (Simultaneous speaking)

8 MR. EIMAR: For the last about 15 years at

9 Palo Verde, yes. Yes, it's a flowchart we use for

10 standard post-trip action. It goes in order of safety

11 functions. The ROs will address the safety functions

12 because they have hard cards to do that. And the

13 control room supervisor uses to help them diagnose what

14 recovery operation procedure to go to, whether it's

15 reactor trip, steam generator tube rupture, station

16 blackout.

17 So this, case because we addressed

18 reactivity first with control rods and then we go to

19 maintenance of vital auxiliaries, that's a second

20 safety function. This is where we're at. So at this

21 point he's going to go yes on the DC power, because we

22 do have it. And it says consider blackout. Then the

23 chart will have you continue on and evaluate the rest

24 of the safety functions. In this case they said there

25 were no other events, so the control room supervisor

1 then would diagnose that this is station blackout event
2 initially.
3 MEMBER CORRADINI: So just two
4 clarifications. So if you start deviating from your
5 procedures that you used to have or currently have to
6 the new ones, could you let us know so we --
7 (Simultaneous speaking)
8 MR. EIMAR: Yes, I will. Yes.
9 MEMBER CORRADINI: And the second part of
10 that is, so, you're going to take us through the
11 yes/no/yes path.
12 MR. EIMAR: Yes.
13 MEMBER CORRADINI: So what happens if
14 there's a yes/no/no path?
15 MR. EIMAR: If there's a yes/no/no path,
16 if I end up with no DC power, then we would go to our
17 functional recovery procedure at Palo Verde currently.
18 MEMBER CORRADINI: Can you tell me what
19 you meant by that? I'm sorry.
20 MR. EIMAR: Palo Verde has -- our
21 emergency response procedures are divided up into
22 optimal recoveries for specific events. Loss of all
23 feed, LOCA, steam generator tube rupture. So we have
24 specific recovery operation procedures for those. If
25 you have a multiple event -- say you have a stuck-open

1 safety with a steam generator tube rupture, it's a dual
2 event. You can go to our functional recovery
3 procedure. So the functional recovery procedure at
4 Palo Verde allows the control room supervisor and the
5 shift manager to get together and assemble a procedure
6 to respond to that event based upon those conditions.
7 MEMBER CORRADINI: Okay. Okay. All
8 right.
9 MEMBER BLEY: I think I've seen these
10 before. There's kind of a format and they pick the
11 steps they think --
12 (Simultaneous speaking)
13 MR. EIMAR: Right. Yes, you determine if
14 it's a challenge or jeopardizes safety function, and
15 then by priority on safety functions you address those
16 in order.
17 MEMBER BLEY: Okay.
18 MR. EIMAR: So that we're always focused
19 on safety functions.
20 MEMBER BLEY: Okay.
21 MR. BAUER: The other thing I might inject
22 at this point is Phil Amway was a shift manager at a
23 BWR, so if he feels like he wants to interject at any
24 point in time, that would be beneficial, too.
25 MR. EIMAR: Okay. So since I said we

1 would diagnose a station blackout, we would go to the
2 station blackout procedure. There are no other
3 events, so we go to the blackout recovery operation
4 procedure. Our blackout procedure is not a flowchart,
5 but for presentation sake I converted it into a
6 flowchart so we could use the same yes/no kind of logic.
7 So the first thing the control room is
8 going to do is confirm a blackout. Relatively easy to
9 do at Palo Verde because you've lost your 4160 buses.
10 That's pretty obvious in the control room. You get a
11 lot of alarms. You don't have your 480. So you can
12 definitely tell you're in a blackout condition. It
13 doesn't take long to diagnose this event. So they'll
14 go yes.
15 The next chart is SFSCs, or safety function
16 status checks. Our shift technical advisors have a
17 duty to perform a safety function status check as well
18 as the control room operators to ensure that we're
19 meeting all of the safety functions for each recovery
20 operation procedure. So that action would be
21 performed. In this particular case you are meeting all
22 safety functions for station blackout because you have
23 DC power. And all the other ones are met because you've
24 been able to successfully shutdown the reactor. Your
25 auxiliary feedwater pump would be running, so you're

1 removing heat. So all safety functions would be met.
2 The next one is several steps in a blackout
3 procedure that you have to do. One is classify the
4 event. You want to actuate a main steam isolation
5 signal to bottle up the steam generators, to preserve
6 inventory. You inform the Energy Control Center to
7 find out the status of the switch yard and the bus, or
8 the grid so you can tell if you're going to get power
9 back from them. You're going to get area operators out
10 to the station blackout generators. Because our
11 strategy, we're a 16-hour blackout coping plant with
12 the station blackout generators, alternate AC. They
13 have to be started within one hour of the event so that
14 we can take credit for the blackout. So our station
15 blackout generators are located about a mile away from
16 the units. So the auxiliary operator has to travel
17 that mile and get that station blackout generator
18 started. So one of the first steps is to dispatch an
19 auxiliary operator out there to get those station
20 blackout generators running.
21 MEMBER SKILLMAN: How does that operator
22 get to that location, Gene?
23 MR. EIMAR: On a vehicle. And then we
24 have security. And depending on where he's at we have
25 one security gate he may have to go through if he's not

1 outside the security. And security goes there to open
2 the gate for him. So part of that process is to notify
3 security.
4 MEMBER SKILLMAN: Is he chauffeured or
5 does he have to start the vehicle?
6 MR. EIMAR: He has his own vehicle. The
7 auxiliary operator that has that area has his own
8 vehicle to get there.
9 MEMBER SKILLMAN: Thank you, Gene.
10 MR. EIMAR: And normally he's outside
11 because his area of responsibility is outside the
12 protected area. So he would be close to the station
13 blackout generators.
14 MEMBER SKILLMAN: Thank you.
15 MR. EIMAR: And normally when we respond
16 to this, the auxiliary operators get there in plenty
17 of time to get the station blackout generators. It
18 actually takes the control room longer to do the control
19 board alignment to receive power from the station
20 blackout generators than it does for the AO to get out
21 in the field and start it.
22 The other thing we're going to do is we're
23 going to place the charging pumps and pull the lock
24 because they have no power. And if they restart, we'll
25 shock the reactor coolant pump seals, so we put those

1 in pull-to-lock. Then we minimize RCS leakage. We
2 want preserve the inventory in the reactor coolant
3 system. And then we maintain our reactor coolant
4 system Tc less than 570 degrees using our atmospheric
5 dump valves. The atmospheric dump valves remove steam
6 from our steam generators. They're manually operated
7 from the control room. They're not automatically
8 operated. So you operate those to prevent secondary
9 safeties from lifting.
10 And then we ensure that at least one steam
11 generator is restoring level to 45-60 percent narrow
12 range. So we want to have adequate feed to a steam
13 generator.
14 MEMBER CORRADINI: And that comes from aux
15 feed?
16 MR. EIMAR: That comes from auxiliary
17 feedwater, yes, sir.
18 MEMBER CORRADINI: Which is steam-driven?
19 MR. EIMAR: It is a steam-driven aux
20 feedwater pump.
21 MEMBER CORRADINI: And then just -- maybe
22 you'll get to this later --
23 MR. EIMAR: Sure.
24 MEMBER CORRADINI: -- is the interlock
25 such that if you lost DC power that aux feed could not

1 function, or it would just function on its own?
2 MR. EIMAR: If we lost DC power, Palo Verde
3 has -- a couple of outages ago in Unit 1 we ran a test
4 with no DC power and we were able to operate the
5 auxiliary feedwater pump locally with auxiliary
6 operators in the field without DC power.
7 MEMBER CORRADINI: So there's no
8 interlocks that would trip it off?
9 MR. EIMAR: There's no interlocks that
10 would prevent it. It would over-speed if we had a
11 condition, but you could reset it and then restart the
12 pump.
13 MEMBER CORRADINI: Okay.
14 MEMBER BLEY: And you don't need it for the
15 atmospheric dumps?
16 MR. EIMAR: Pardon me?
17 MEMBER BLEY: You said manual.
18 MR. EIMAR: Well, they're manually
19 operated from the control room, right?
20 MEMBER BLEY: Remotely?
21 MR. EIMAR: It's remote operated, yes.
22 MEMBER BLEY: But, so they need some kind
23 of power to operate?
24 MR. EIMAR: They have nitrogen and they
25 have DC. If that fails to the atmospheric dump valves,

they can be operated manually in the main steam support structure.

MEMBER BLEY: Okay.

MEMBER RAY: If you have your ear plugs in.

MR. EIMAR: Pardon me, sir?

MEMBER RAY: If you have your ear plugs in.

MR. EIMAR: Yes, if you have your ear plugs in. That's correct. It gets very loud up there when you operate those valves.

MEMBER SKILLMAN: When you are making up for the inventory that's lost through the ADVs, that inventory is coming from your feedwater storage tanks, or originally from the hot well?

MR. EIMAR: It's a condensate storage tank. Okay. We use a condensate storage tank for the auxiliary feedwater supply.

MEMBER SKILLMAN: Okay. Thank you.

MEMBER CORRADINI: And that -- sorry, I'm just --

MR. EIMAR: That's okay.

MEMBER CORRADINI: We'll go a different route. You tell us to stop when we take you too far.

So when you said you did the test without DC power, how long did you run the test with the aux feed without DC power?

1 MR. EIMAR: We ran it for just a -- we were
2 able to start it and feed the steam generators. We
3 verified that we could start and feed steam generators
4 with an auxiliary feedwater pump.
5 MEMBER CORRADINI: So has there been any
6 sort of test to see -- not just you guys, but in the
7 industry to look at essentially any sort of transient
8 operation of the aux feed when I didn't have DC power?
9 In other words, I'm curious about oscillatory behavior
10 and be able to survive that because you have to do it
11 manually versus with DC control.
12 MR. EIMAR: Well, manual operation is
13 you're basically controlling the throttle valve.
14 MEMBER CORRADINI: Okay.
15 MR. EIMAR: You're actually controlling
16 the turbine itself, so you're in good shape. So there
17 would be no other signals in there but what you're
18 putting in.
19 MEMBER CORRADINI: And then last
20 question: A condensate storage tank, that water supply
21 would get you how long even if you didn't have DC power?
22 MR. EIMAR: Seventy-two hours.
23 MEMBER CORRADINI: Okay.
24 MR. EIMAR: Okay. We have water
25 available for 72 hours at Palo Verde.

1 So you go through those actions. So one
2 of the actions was to declare an emergency plan. So
3 the shift manager's responsibility then is to look at
4 protecting the health and safety of the public, so he's
5 going to be looking at the emergency plan. So --
6 MEMBER CORRADINI: I'm sorry.
7 MR. EIMAR: Yes?
8 MEMBER CORRADINI: Last one.
9 MR. EIMAR: Sure.
10 MEMBER CORRADINI: And he'll tell me to
11 stop.
12 So is 72 hours unusually long, or normally
13 what we'd expect in PWRs for condensate storage?
14 MR. EIMAR: I can't answer for anybody
15 else.
16 MEMBER CORRADINI: I'm sure you can't, but
17 I'm kind of --
18 MR. WEBSTER: I can -- for Dominion plants
19 that is long. Some of our sites go four hours, six
20 hours.
21 MEMBER STETKAR: You usually see about 6
22 to 12, maybe, if you're stretching it.
23 MR. WEBSTER: Right. When I do the
24 presentation for the meeting, I'll go over a little bit
25 of our strategy for the aux feedwater supply.

1 MEMBER SKILLMAN: Okay. Seventy-two is
2 generous.
3 MR. EIMAR: It's generous, yes.
4 MR. POWELL: Gene?
5 MR. EIMAR: Yes?
6 MR. POWELL: I think you're confusing
7 batteries and CST.
8 MR. EIMAR: No, I'm good. We'll talk
9 about that in a minute.
10 MR. POWELL: All right.
11 COURT REPORTER: Would you please
12 identify --
13 (Simultaneous speaking)
14 MR. EIMAR: I'll get there in the
15 strategy.
16 MEMBER STETKAR: Mike, yes --
17 MR. POWELL: I'm Mike Powell, director of
18 Fukushima --
19 (Simultaneous speaking)
20 MEMBER STETKAR: Yes. No, come up to the
21 microphone, Mike. Otherwise, he won't pick you up.
22 MR. EIMAR: Yes. No, we'll get there.
23 MR. POWELL: I'm Mike Powell, the director
24 of Fukushima Initiatives. The CST has to be refilled
25 at 34 hours. All right?

1 MR. EIMAR: Yes, we have water capability
2 of feeding with the auxiliary feedwater pump up to 72
3 hours.
4 MR. POWELL: Using a combination of CST
5 and the refueling water storage --
6 (Simultaneous speaking)
7 MEMBER CORRADINI: Yes, the answer is
8 -- so, what I hear is it's variable. It could be as
9 little as something that's less than 10 hours to
10 something that's 3 days.
11 MR. POWELL: And it varies based upon the
12 analysis that you perform. If you use a standard decay
13 heat, you might see something around 14 to 16 hours.
14 If you use best estimate decay heats using scale and
15 origin, you can get significant improvement in that
16 time beyond 24 hours. We were able to use a best
17 estimate technique to extend that time out to 34 hours
18 to refill the CST. We also were able to do a water
19 quality analysis to line up other water sources to get
20 us beyond 72 hours, but it's a combination of the
21 condensate storage tank and the refueling water storage
22 tank that gets us there.
23 MEMBER CORRADINI: Okay. Thank you.
24 Sorry to interrupt.
25 MR. EIMAR: That's all right.

1 Okay. I was talking about an emergency
2 plan. If we break this down to an individual unit, that
3 means it's possible at Palo Verde to have this event
4 occur in a single unit, because we're a multi-unit site.
5 So if we looked at -- just if one unit at Palo Verde
6 had this, the initial classification for this would be
7 -- this was like lost off-site and on-site AC power for
8 greater than 15 minutes would be a site area emergency.
9 Once you get to the point you determine that your
10 station blackout generators are not available and
11 you're not going to recover the switch yard, you go into
12 the extended loss of AC power, and that would be an
13 general emergency.
14 But also at Palo Verde, because of the way
15 our station blackout generators are designed, they're
16 capable of only supplying power to two of the three
17 units. If this was a site-wide event, the site would
18 be in a general emergency as soon as they determined
19 that they did not have power from the grid or power from
20 the station blackout generator. So we could be in a
21 general emergency initially right off the -- as the
22 initial call for a site-wide event.
23 So then the next thing you look at in
24 blackout is do I have one vital 4160 bus energized
25 within one hour? If I do, then I just continue on. If

1 I don't, then I've got to look at is a station blackout
2 generator or a diesel generator available from another
3 unit? And if that's not the case, this is where I
4 deviate from my procedures and I look at -- I have the
5 4160 not expected. I use this contingency step if the
6 SBOGs are not available and it would direct the control
7 room to perform the FSG or Flex Support Guideline. And
8 also we stay in the station blackout procedure so that
9 we can maintain command and control under the emergency
10 operating procedure.
11 So at that point we'll perform the extended
12 loss of AC Power Guideline. This is the point where
13 we would deviate from what we would normally do.
14 MEMBER BLEY: Gene, excuse me. Just so I
15 understand what you guys have done, the actual
16 procedure is a step-wise procedure, so you must have
17 like a little caution box or something --
18 (Simultaneous speaking)
19 MR. EIMAR: Yes. Yes, it's a contingency
20 step in the procedure. When you get down and don't have
21 another diesel generator, you don't have a station
22 blackout generator and you're going to be greater than
23 a one-hour time frame, it directs you go to the AC
24 Guideline, Extended Loss of AC Power Guideline
25 procedure.

MEMBER BLEY: And you guys have actually run training on these?

MR. EIMAR: Yes, we have.

MEMBER BLEY: Yes, okay.

MR. EIMAR: The video that I have shows a little bit of the simulator training. But we ran all of the crews through this, the initial onset of this event from the time they had the blackout, determined the extended blackout, and then get cooled down and stabilized temperatures.

MEMBER BLEY: Okay.

MR. EIMAR: So we did that for all the crews. So that's been completed for Palo Verde.

MEMBER STETKAR: Gene, the way the procedure is set up also, you say is power available from the -- within one hour?

MR. EIMAR: That's correct.

MEMBER STETKAR: That to me says that there's that kind of one-hour time window that you give people to try to get power back. So I'm trying to think of the timing of the event.

MR. EIMAR: Right.

MEMBER STETKAR: So is it reasonable to expect that the guys would be trying to get power back for an hour before you transition out?

1 MR. EIMAR: Our station blackout is we
2 have one hour to get the station blackout generator
3 power to it. If you're going to be unsuccessful,
4 you're at -- now the thing is if I recognize it at the
5 half hour point -- most of our crews recognized it
6 within 30 minutes of the time that we had initiated the
7 event. They said I'm going to extend loss AC power
8 because of the situation, the information they were
9 provided by the simulator instructors.
10 MEMBER STETKAR: Yes.
11 MR. EIMAR: And they declared the event
12 and went right to the procedure. The expectation is
13 if you have any doubt at all about that one hour is to
14 enter this procedure.
15 MEMBER STETKAR: Okay.
16 MR. EIMAR: We're training the operators
17 to do that, not to --
18 MEMBER STETKAR: I was going to say --
19 (Simultaneous speaking)
20 MEMBER STETKAR: -- the tendency is to go
21 I almost got it. I almost got it.
22 (Simultaneous speaking)
23 MR. EIMAR: I'm almost there. And then
24 it's three or four hours later you're waiting for
25 somebody to start a diesel generator and all of that.

1 MEMBER STETKAR: Okay.

2 MR. EIMAR: The way we train the operators

3 is as soon as you recognize that you're not -- you have

4 to be sure you're going to get power back in an hour

5 before you decide not to enter this procedure.

6 MEMBER STETKAR: Thanks.

7 MR. EIMAR: So that was our goal.

8 We're going to continue in the blackout

9 procedure because there's some --

10 MEMBER SKILLMAN: Gene, let me ask a quick

11 question here.

12 MR. EIMAR: Sure.

13 MEMBER SKILLMAN: Back onto your slide

14 14 --

15 MR. EIMAR: Back up?

16 MEMBER SKILLMAN: Yes. Back one or two

17 more.

18 MR. EIMAR: One more?

19 MEMBER SKILLMAN: Yes, go to 14. Back one

20 more.

21 MR. EIMAR: Fourteen?

22 MEMBER SKILLMAN: Yes.

23 MR. EIMAR: Yes, sir.

24 MEMBER SKILLMAN: At each of these stages

25 you're required to make your notifications.

1 MR. EIMAR: That's correct.

2 MEMBER SKILLMAN: When you're in a

3 blackout situation things get very busy very quickly

4 in a control room.

5 MR. EIMAR: That's correct.

6 MEMBER SKILLMAN: You've got more lights,

7 bells, whistles, indicators.

8 MR. EIMAR: Yes.

9 MEMBER SKILLMAN: The lighting probably

10 changes because you're swapping onto your DC. What

11 amount of resource is absorbed on your operating team

12 in making timely notifications to your local

13 communities and to the state?

14 MR. EIMAR: Okay. The control room

15 supervisor and two reactor operators are responding to

16 the plant, the shift manager and the shift technical

17 advisor. The shift manager and the shift technical

18 advisor share this responsibility. The shift

19 manager's primary duty is he is ultimately responsible

20 for classification. It's non-delegable. But we have

21 the STA do a peer check so that -- an independent

22 basically check of it. He does an independent

23 verification of the classification.

24 So at one point the shift manager asks the

25 STA to observe -- to basically take control room

1 oversight so that we have control room oversight either
2 provided by the shift technical advisor or the shift
3 manager. During that time period the shift manager
4 goes to our EAL charts, determines what classification
5 to make. He makes a classification. Then he takes
6 back the control room oversight. Asks the STA to do
7 the same thing.
8 They have two separate charts. They come
9 to what they think the classification is. They compare
10 it and say, okay, this is the classification we have.
11 If there's any discrepancy, they talk about it and
12 hopefully they get the correct classification. This
13 one is pretty straightforward. They'll end up in a
14 general emergency. So that is done by the shift
15 technical advisor and the shift manager, not impacting
16 the internal supervisor or the reactor operators
17 responding to the plant.
18 MEMBER SKILLMAN: So who makes the call?
19 MR. EIMAR: Who makes the call? The shift
20 manager classifies it and then the STA makes the
21 notifications.
22 MEMBER SKILLMAN: Now, I understand.
23 Okay. Back to 18.
24 MR. AMWAY: And if I could just interject
25 a minute. What Gene just described at his plant is

1 identical, the same way we do it at our boiling water
2 reactors as well. Same process.
3 MEMBER BLEY: Gene?
4 MR. EIMAR: Yes, sir?
5 MEMBER BLEY: I have two questions
6 following up on something John had asked you. Make
7 sure I can remember. It seems to me we have a better
8 case here than in some places when we talk about wanting
9 to go directly here and not wait in that I don't -- is
10 there any flexibility or significant troubles
11 introduced to the operators by going onto this --
12 MR. EIMAR: Oh, you mean if they entered
13 it and then an hour later they got power back?
14 MEMBER BLEY: Yes. MR. EIMAR:
15 No,
16 because --
17 MEMBER BLEY: There's no obstacles to --
18 (Simultaneous speaking)
19 MR. EIMAR: There's no real obstacles.
20 When we get into the strategy, I'll talk about those,
21 if we could.
22 MEMBER BLEY: Okay.
23 MR. EIMAR: And we'll get there.
24 MEMBER BLEY: And the related question --
25 MR. EIMAR: Sure.

1 MEMBER BLEY: -- once you get this thing
2 fired up is all of the loading a mandated process?
3 MR. EIMAR: As far as bringing the FLEX
4 equipment over and stuff?
5 MEMBER BLEY: Yes.
6 MR. EIMAR: Yes, it is.
7 MEMBER BLEY: So there aren't any
8 interlocks we have --
9 (Simultaneous speaking)
10 MR. EIMAR: There's no interlocks, yes.
11 We specifically looked at Fukushima Daiichi's event
12 where they had their isolation condenser where they
13 didn't know that they had a failure that basically
14 interrupted core cooling. When we did our
15 modifications we installed the penetration into like
16 the steam generator feed lines for aux feed water
17 downstream of the last operated, or motor-operated
18 valve so that it's between that valve and containment
19 penetration. So the only thing that's in between
20 delivering water and the steam generator are manual
21 valves that the operators will operate.
22 MEMBER BLEY: Okay.
23 MR. EIMAR: So we didn't have to worry
24 about a failure of a component upstream in that. So
25 the only thing between that point and the steam

generator are the check valves. So you'd have to have a mechanical failure of a check valve to have an issue.

MEMBER BLEY: Good. Thanks.

MR. EIMAR: Okay.

MEMBER CORRADINI: And that was just at Palo Verde or --

MR. EIMAR: Yes, this was Palo Verde. I can't answer for whatever everybody --

(Simultaneous speaking)

MEMBER CORRADINI: That's fine. That's fine. I just wanted to make sure I was clear.

MR. EIMAR: Yes.

MR. WEBSTER: This is Bill Webster, Dominion. That manual operation he described is the same as for our Westinghouse three and four-loop plants.

MR. EIMAR: So then we're going to get into the Extended Loss of All Site AC Guideline itself. And the guideline is basically to provide a strategy for coping with the extended loss of all site AC power.

Now realize the other part of this is the loss of ultimate heat sink, but for Palo Verde if I lose AC power, I lose my spray pond pumps, I have lost my ultimate heat sink. So the initial focus is basically to cool the reactor coolant system and maintain spent

fuel pool inventory and cooling. By cooling the reactor coolant system I maintain containment. So containment for Palo Verde is not an issue because of the size of our containment, large dry containment.

Yes, sir?

MEMBER CORRADINI: This of course is all to your point. So repeat that last thing, the connection between the ultimate heat sink again, please?

MR. EIMAR: At Palo Verde we don't have a river or a lake or an ocean, right? We have spray ponds for our ultimate heat sink. And those spray pond pumps are 4160-volt powered.

MEMBER CORRADINI: Okay.

MR. EIMAR: And so with lots of diesel generators on the grid, I have no power for them. So the ELAP results in a loss of ultimate heat sink.

MEMBER CORRADINI: So is there no cross-tie that you could take that as the water source for your aux feed?

MR. EIMAR: There is no cross-tie. The water is available if I wanted to use it, but I have other water that I'd prefer to use.

MEMBER CORRADINI: Okay.

MR. EIMAR: It is a seismic structure that

I would have seismic water available. But I don't need to use it, so it's not part of our strategy. Yes, we're trying to keep clean water --

(Laughter)

MR. EIMAR: -- because we'd like make electricity again some day.

MEMBER STETKAR: Well, you could put boron in there maybe.

MR. EIMAR: Yes, boron is okay. Used to be good in steam generators.

So our cooldown logic. Normally in a blackout procedure we don't cool down until we restore power from a station blackout generator. So we just stabilize and maintain something less than 570. You only cool down and maintain 50 degrees sub-cooling, and that's it. That's all you do is you just cool down a little bit in a blackout procedure. Then when once you get power, then you decide what kind of power is it and do I need to go to cold shutdown or can I stabilize here? If I get the grid back, I'm going to stabilize so I can turn around and make electricity. But for this event I need to cool down. And so we have two big reasons for cooling down. One is it allows -- by cooling down I depressurize. It allows me to inject my safety injection tanks. So the passive injection

1 will inject water in the reactor coolant system,
2 compensate for water that's leaking out of the reactor
3 coolant system.
4 And then we assume at Palo Verde a
5 25-gallon-per-minute seal leak instantaneously with a
6 loss of power. So we put in basically
7 101-gallon-a-minute leak coming out of our reactor
8 coolant system. And as you're cooling down, the RCS
9 is going to contract. So you're losing that volume of
10 water. So by depressurizing I decrease that leak rate
11 across the seals and it allows me to minimize RCS
12 leakage. So I get water coming from the safety
13 injection tanks and I decrease the amount of water going
14 out of the reactor coolant system.
15 So we cool down to somewhere that's an
16 elevated T_{cold} temperature, 155 degrees. It's high
17 enough to allow steam generators to have enough
18 pressure to supply steam to the turbine-driven
19 auxiliary feedwater pump, 155 psia. And it's low
20 enough so that the RCS differential pressure is -- the
21 leak is small enough from the leak because of that
22 differential pressure that it's within the capacity of
23 a single charging pump at Palo Verde. Palo Verde has
24 three positive displacement pumps. We don't have
25 centrifugal charging pumps. So we get the leak within

1 the capacity of a charging pump. So now we can start
2 putting water back into the reactor coolant system.
3 MEMBER STETKAR: Gene, you said you have
4 nitrogen -- you had pneumatically operated
5 atmospherics. You have nitrogen bottles for those?
6 MR. EIMAR: Yes, there's nitrogen
7 accumulators for them. They're good for 15 hours.
8 MEMBER STETKAR: Sixteen hours? All
9 right. Thanks.
10 MR. EIMAR: Because we're a 16-hour coping
11 plant --
12 MEMBER STETKAR: Yes, okay.
13 MR. EIMAR: -- with alternating AC within
14 an hour.
15 MEMBER STETKAR: And that's holding them
16 open? I mean --
17 MR. EIMAR: No, that's when you have the
18 really sloppy operator that opens them up fully, closes
19 them fully, does all kinds of -- when you make the
20 assumptions for --
21 MEMBER STETKAR: So it's got some --
22 MR. EIMAR: -- the event.
23 MEMBER STETKAR: Okay.
24 MR. EIMAR: There's a lot of extra room in
25 there.

1 MEMBER STETKAR: Okay.

2 MR. EIMAR: So we just assume 16 hours for
3 our vent, but we expect that it would last longer,
4 because we expect the operator to come up and stabilize.
5 We watched the operators during the cooldowns in the
6 simulator. They were able to operate ADVs and not have
7 an issue. Okay?

8 So then the Support Guideline, it's
9 basically an emergency coordinator who -- initially in
10 the event the shift manager becomes the emergency
11 coordinator at Palo Verde. So put emergency
12 coordinator or shift manager basically directs
13 entering the FLEX Support Guideline. Now the control
14 room supervisor is going to come to him and say, look,
15 we've got this condition. We've got a blackout. The
16 grid's not coming back, the diesels aren't running and
17 the station blackout generators are gone. It's not
18 a tough decision to say, yes, we're going to go to the
19 FLEX Support Guideline.

20 So it's basically loss of power, diesel
21 generator, station blackout and if you have any doubt
22 that you're going to get 4160 power in a timely manner.
23 And that's what we've emphasized with the operators.
24 If you have any doubt at all, go here, because it's not
25 going to hurt you to go here.

1 MEMBER SKILLMAN: How do you ensure that
2 your operators aren't timid in communicating their
3 doubt? In Region I for the many years I was there we
4 would declare inoperability when we lost our
5 confidence.
6 MR. EIMAR: Right.
7 MEMBER SKILLMAN: And that was good
8 enough.
9 MR. EIMAR: Right.
10 MEMBER SKILLMAN: And I'm wondering if
11 there is code language or part of your culture where
12 any doubt really means even the slightest doubt. Hey,
13 I'm there.
14 MR. EIMAR: For this event that's the way
15 we train the operators. I mean, if you have a mechanic
16 up there and say I'm going to get you the diesel in the
17 next 30 seconds or -- but he says I'm not sure, then
18 you -- or you talk to the system operator and he says,
19 yes, we know exactly what happened. We can close this
20 breaker. You'll have power in the next 15 minutes, but
21 -- or he goes, you know, I don't know. And so, and in
22 this event, for Palo Verde our biggest threat is
23 seismic, so it would be an issue with the seismic
24 condition of our switch yard. So if our switch yard
25 is not available, it's going to be longer than the one

hour to four-hour time frame that we would need to get power back.

MEMBER SKILLMAN: So you're saying --

MR. EIMAR: So it's pretty -- this one's a little --

MEMBER SKILLMAN: But you're saying your culture accepts --

(Simultaneous speaking)

MR. EIMAR: Yes, our culture -- oh, yes.

MEMBER SKILLMAN: How about at the other stations?

MR. WEBSTER: For Dominion the way the procedures -- again, it's a training. And the way the procedures are if they know they're there, they'll go early. But the procedure says at an hour point you're not there, then you go. So at most it would be that hour, and all our analysis would support that being sufficient to be successful. So it's training and procedures.

MR. AMWAY: And similar at my station there is direction as a station blackout procedure where you can make an attempt to manually start a diesel generator, but it's a very short sequence. Check this, this, this, this. If you're started, you're good. If you're not started, you continue on.

1 MR. EIMAR: And the same for us. If you
2 get to the one hour point, you're here.
3 MEMBER SKILLMAN: Okay. Thank you.
4 MR. EIMAR: No matter what you're being
5 told by anybody else. You're at one hour, you enter
6 this guideline.
7 MEMBER BLEY: I think that's good. I
8 think where Dick was going a little is we've known
9 people here or there or cultures in plants; not yours,
10 where to express doubt is something that gets you in
11 trouble, gets you chastised. You ought to know that.
12 And so people are really afraid to come forward.
13 MR. EIMAR: Right.
14 MEMBER BLEY: And we wanted to hear what
15 you said, yes.
16 MEMBER SKILLMAN: Yes, that's exactly
17 what I was trying to --
18 (Simultaneous speaking)
19 MR. EIMAR: Yes, and as I said earlier,
20 there is no impact. If I enter this procedure, there's
21 a couple things you got to do, but it's not like
22 -- there's no detrimental impact to the plant if I've
23 entered this and started taking actions before that one
24 hour point and --
25 MR. WEBSTER: You're not putting water in

1 the generator.

2 MR. EIMAR: Yes, not putting seawater or

3 getting it into the steam generator that I have to worry

4 about it. Now, I may have de-energized the things that

5 I want to get energized again, but it's not really a

6 major issue.

7 MR. AMWAY: And I think really to address

8 your concern, I know when I was a shift manager in -- I

9 gave that up in 2012, but it's fairly recent experience,

10 that during the training scenarios I would make sure

11 -- I'd try to -- don't keep a secret. If you've got

12 a problem in implementing the steps you're

13 implementing, I need to know as soon as possible so I

14 can start considering alternatives. But I don't think

15 you'll find across the industry that we have problems

16 that operators are afraid to raise concerns with their

17 success path that they've been assigned.

18 MR. EIMAR: Okay. All right. So let's

19 go through the event initiation timeline. So

20 initially we have an event occur at time zero. Within

21 the first five minutes we expect that the

22 turbine-driven auxiliary feedwater pump starts. It's

23 either going to start because an operator recognizes

24 he needs to start it because he doesn't have any

25 feedwater, or we get an aux feedwater actuation signal.

1 It's a busy time in the control room. I
2 think we only had about a quarter of the crews started
3 the pump before the aux feed. And it happens quick.
4 The aux feed signal came in and started the pump. So
5 it's something that happens relatively quick for the
6 control room. And they're busy addressing other
7 safety functions before they get there. So but it's
8 something that the aux feedwater pump will start
9 automatically. If it doesn't, within a minute or so
10 of the time that it would have started the operator
11 would have been at that point on the safety function
12 flowchart to get there. So he would have gotten the
13 pump started.
14 We figure the longest time to do a standard
15 post-trip action for this would be about 15 minutes.
16 I think our slowest crew was like 12 minutes in the
17 simulator, so they all met their 15-minute time frame
18 for that. And at that point, because you recognize
19 you're not going to be going to a reactor trip, you'll
20 enter the blackout emergency operating procedure. And
21 then sometime less than an hour you're going to
22 determine you don't have station blackout generators
23 and no other power source, so you'll enter the Extended
24 Loss of AC Guideline, the ELAP procedure.
25 MEMBER BALLINGER: I have a question.

1 MR. EIMAR: Yes, sir?

2 MEMBER BALLINGER: When you're doing

3 these things, do you keep track of the error rate that

4 the staff has and feed that back in to correct

5 procedures in any way?

6 MR. EIMAR: Yes, the procedure writer and

7 myself -- I attended almost all of training sessions.

8 I only missed like one or two of them, but I was there

9 for most all of the training sessions. But the

10 procedure writer I had was there for the other ones.

11 So we took input from the crews because we were kind

12 of in a room writing these things. And so we wanted

13 to have the crew input. So we did take input from all

14 the crews to help improve our FSG, our FLEX Support

15 Guidelines. And so we really didn't have an issue with

16 the strategies or with some of the phrasing. It was

17 mostly administrative changes we made. The operators

18 had no issue with the strategy itself, so we didn't have

19 any change at all how we accomplished the task through

20 the procedure.

21 MEMBER CORRADINI: Yes, but just to follow

22 on --

23 MR. EIMAR: Yes?

24 MEMBER CORRADINI: -- so far as you've

25 taken us through this nothing has changed prior to

1 -- these are all procedures that would have been trained
2 on and implemented years ago.
3 MR. EIMAR: Well, but station blackout.
4 Once I said go to the FLEX Support Guideline, we're in
5 the new stuff, right?
6 MEMBER CORRADINI: At least so far what
7 you've explained to us, it still seems --
8 MR. EIMAR: On this --
9 MEMBER CORRADINI: -- that you're using
10 all the equipment that you already --
11 MR. EIMAR: That's correct.
12 MEMBER CORRADINI: Okay.
13 MR. EIMAR: We have not mobilized any
14 portable equipment at all for this so far.
15 MEMBER CORRADINI: Okay.
16 MR. EIMAR: Now this is where we start to
17 deviate, because once we enter the FSG, we start
18 deviating from what has existed for years.
19 MEMBER CORRADINI: Okay.
20 MR. EIMAR: We have a parallel procedure
21 we use to take actions for the FLEX Support Guideline.
22 Because it's going to direct us to do things that the
23 station blackout doesn't do. The first one is we're
24 going to do a battery load shed to extend battery life.
25 Our batteries, by design-basis, are good for two hours.

1 If we didn't have a design-basis accident, they would
2 last about eight hours if we just let the battery sit
3 there and didn't do anything. By doing our load shed
4 we extended our battery life out beyond 35 hours. So
5 the shortest battery is about 35 to 37-hour time frame.
6 So we do a radical load shed. We go down
7 to one channel of indication, the Bravo channel. We
8 de-energize Alpha, Charlie and Delta. We run
9 auxiliary feedwater Alpha, so it's taking DC power
10 there. And then we run the Bravo train atmospheric
11 dump valves. So we split out. We shared loads where
12 we could. Make sure that we maximize the time
13 available for batteries, because batteries and water
14 are really important for this event. The batteries
15 give you 120-volt AC for control room indication.
16 MEMBER STETKAR: Are there contingencies?
17 You said there's dictated -- you know, lined this up
18 to the Alpha battery --
19 MR. EIMAR: Yes.
20 MEMBER STETKAR: -- this stuff up to the
21 Bravo battery. Suppose some of this stuff doesn't
22 work? I mean --
23 MR. EIMAR: If it doesn't work, we have
24 options. Well, for the indication, or the atmospheric
25 dump valves we have a step in there to re-energize the

1 Bravo, if we had to.

2 MEMBER STETKAR: Okay.

3 MR. EIMAR: Okay. And then the other

4 option is you could still operate them manually. The

5 only two things I need to remove decay heat are the

6 auxiliary feedwater pump and atmospheric dump valves.

7 Both of those can be locally operated by an auxiliary

8 operators in the field. They don't have to be operated

9 for the control room.

10 MEMBER CORRADINI: So the load shed is the

11 first thing that is in the FSGs that is different than

12 what you had years ago?

13 MR. EIMAR: That's correct. Load shed is

14 the first thing we're going to do that deviates, because

15 we don't do any load shedding at all for our blackout

16 procedure at Palo Verde.

17 MEMBER CORRADINI: Okay.

18 MR. EIMAR: Now the Westinghouse plants

19 do. I don't know about the BWRs. They have a load

20 shed.

21 MR. AMWAY: We had a load shed before. We

22 have expanded it in some cases to increase the coping

23 time of the battery.

24 MEMBER CORRADINI: And so just to follow

25 on John's question: So when you do these simulator

trainings, do you do the "what if," that the procedure says X, but X is unavailable, and you see if they think out of the box and use Y? You know what I'm asking?

MR. EIMAR: We trained specifically to the strategy itself. We didn't do any faulted -- like a faulted GPM. We didn't do faulted events. We wanted to train the operators on what the strategy was. Because the rules were there were no other equipment failures, so we assumed that it worked as is.

MEMBER CORRADINI: Okay. Sometimes things happen and they don't follow the rules.

MR. EIMAR: That's correct.

MEMBER CORRADINI: So I'm just trying to figure out what you do to -- this kind of goes back to Ron's --

MEMBER BALLINGER: Yes, I'm circling back to slide No. 5, that little box on the right that says "go to functional recovery."

MR. EIMAR: Yes.

MEMBER BALLINGER: Okay. Does that drop you into the FLEX thing? I mean, that seems to me like where the rubber really hits the road.

MR. EIMAR: Functional recovery does not direct you directly to the FLEX procedure, but there's a section in there that directs you to the blackout

1 procedure which directs you to the FLEX Support
2 Guideline. So the issue comes in -- if we lose DC
3 power, then there are some other things you need to do,
4 which would be go manually and operate those
5 components. Okay? So it's kind of --
6 MEMBER BALLINGER: I probably have more
7 questions, but --
8 MR. EIMAR: Yes, I know.
9 MEMBER CORRADINI: But if I might just say
10 Ron's question differently, because you kind of
11 answered it in pieces, which is that you can with ear
12 plugs manually operate the atmospheric dumps for a
13 while, you can run the aux feed manually --
14 MR. EIMAR: Yes.
15 MEMBER CORRADINI: -- but you need
16 operators at the locations --
17 MR. EIMAR: That's correct.
18 MEMBER CORRADINI: -- dispatched
19 appropriately?
20 MR. EIMAR: That's correct.
21 MEMBER RAY: What's happening to the
22 reactor coolant pump seals at this point in time?
23 MR. EIMAR: I'm sorry, sir?
24 MEMBER RAY: What's happening to the
25 reactor coolant pump seals at this point in time?

1 MR. EIMAR: Well, we assume that the seals
2 failed instantaneously at the onset of the event.
3 MEMBER RAY: Meaning what?
4 MR. EIMAR: Meaning that at Palo Verde
5 it's a 25-gallon-a-minute leak per reactor coolant
6 pump.
7 MEMBER RAY: And it's limited to that
8 indefinitely?
9 MR. EIMAR: That's correct.
10 MEMBER RAY: And then as we cool down, it's
11 obviously going to be less because we decrease the
12 differential pressure.
13 MEMBER RAY: Okay. You have pressurizer
14 level indication?
15 MR. EIMAR: We have pressurizer level
16 indication, but it's going to go out the bottom. Okay?
17 MEMBER RAY: Right.
18 MR. EIMAR: And we will actually form a
19 void in the head.
20 MEMBER RAY: Correct.
21 MR. EIMAR: Because of the amount of
22 leakage and the RCS cooldown.
23 MEMBER RAY: And the natural circulation
24 that you're depending on to transfer the decay heat to
25 the steam generator, it lasts --

1 MR. EIMAR: It's not interrupted during
2 this event. Okay?
3 MEMBER RAY: Even with a bubble on the
4 head?
5 MR. EIMAR: Even with a bubble on the head
6 because it doesn't get into the outlet plenum. We have
7 the head and the outlet plenum. So as long as the
8 bubble stays in the head, you still have natural
9 circulation. We don't go to reflux boiling. Okay?
10 The other thing that we do different in
11 this procedure compared with the blackout is we start
12 the cooldown. And like I said before, we stabilize in
13 the blackout and don't do a cooldown until we get power
14 back. In this case we're not getting power, so we have
15 to do the cooldown.
16 MEMBER STETKAR: How fast do you tell them
17 to cool down?
18 MR. EIMAR: Okay. We're going to talk
19 about that.
20 MEMBER STETKAR: Okay.
21 MR. EIMAR: So the load shed itself takes
22 less than hour if we use one auxiliary operator. We
23 performed that. We validated that with auxiliary
24 operators. Our slowest operator was 54 minutes. But
25 it naturally has a break into two separate buildings

so we could dispatch AOs and get it done in half the time. Most of the crews who went through the simulator, they said I think I'd have two AOs do this. But we've designed it so they could do it with one.

MEMBER STETKAR: Back shift on a Sunday, how many AOs --

(Simultaneous speaking)

MR. EIMAR: Well, Palo Verde's minimum admin level 24 hours a day, 7 days a week, not counting security, is 51 people.

MEMBER STETKAR: How many?

MR. EIMAR: Fifty-one people.

MEMBER STETKAR: Yes, but -- oh, okay. So that's --

MR. EIMAR: That's everybody.

MEMBER STETKAR: Yes, but that's everybody.

MR. EIMAR: That's everybody.

MEMBER STETKAR: That's --

(Simultaneous speaking)

MR. EIMAR: For operators, we have four to six auxiliary operators per crew. We have seven reactor operators.

MEMBER STETKAR: Okay. So you've got one guy in the aux building.

1 MR. EIMAR: Yes.

2 MEMBER STETKAR: You've got another guy

3 out at the diesel. So I got --

4 MR. EIMAR: Well, there's none left.

5 Basically there's not going to be anybody at the diesel,

6 because once -- if the diesel doesn't start from the

7 control room, there's not much --

8 (Simultaneous speaking)

9 MEMBER STETKAR: No, no, no. The SBO

10 diesel.

11 MR. EIMAR: The station blackout. Well,

12 he's an extra operator.

13 MEMBER STETKAR: Oh, okay.

14 MR. EIMAR: He's --

15 MEMBER STETKAR: He's not a part of the --

16 (Simultaneous speaking)

17 MR. EIMAR: He's part of the -- at Palo

18 Verde we have three units --

19 MEMBER STETKAR: Okay.

20 MR. EIMAR: -- with -- each unit is staffed

21 by a shift crew.

22 MEMBER STETKAR: Yes.

23 MR. EIMAR: So there's a site crew and then

24 there's a shift crew. So you have this -- it's called

25 area nine. And the area nine operator works for all

1 three units.

2 MEMBER STETKAR: Okay.

3 MR. EIMAR: And he's got the station

4 blackouts and stuff outside the protected area.

5 MEMBER STETKAR: He's got the blackout.

6 MR. EIMAR: Right.

7 MEMBER STETKAR: Okay.

8 MR. EIMAR: And he's got the switch yard,

9 he's got the cooling towers --

10 MEMBER STETKAR: Okay.

11 MR. EIMAR: -- he's got the station

12 blackout generator. So that's why I say he's probably

13 outside of the protected area most of the time, because

14 he's got a lot of equipment to check.

15 MEMBER STETKAR: All right. So you got

16 you said four to six per unit inside.

17 MR. EIMAR: Yes. Yes, depending on

18 whether we're running radwaste and condensate demands

19 and things like that. So we have adequate staffing to

20 do this because there's not going to be much else for

21 them to do with no power. Okay?

22 MR. WEBSTER: And just to add to that, we

23 did staffing analysis. They went through the minimum

24 staff and the specific steps for this type of event and

25 verified it.

1 MEMBER STETKAR: I mean, I'm just thinking
2 of you've probably got a guy in the aux building and
3 it's not clear whether you're going to pull him out of
4 the aux building because he's checking stuff.
5 MR. EIMAR: He's coming out of the aux
6 building because --
7 MEMBER STETKAR: Coming out of the aux
8 building? Okay.
9 MR. EIMAR: -- there's nothing to do in the
10 aux building other than part of the battery load shed.
11 So the auxiliary operators will come to the control room
12 and be dispatched to do the load shed and some others
13 we give to them.
14 MEMBER STETKAR: Okay.
15 MR. EIMAR: Okay? So we basically have
16 selected loads. Like I talked before, we have
17 selected. The Alpha train auxiliary feedwater pump,
18 the Bravo train atmospheric dump valves. We have
19 selected instrumentation that we remain energized to
20 monitor the plant for the control room. And the load
21 shed itself also provides the equipment name and
22 breaker number so that if we had to -- if something was
23 broken, the control room supervisor can look and say,
24 okay, I need pressurizer level, because it's not
25 indicating. So which breaker do I close? He goes

through another channel. Looks up pressurizer level. Finds the breaker and he can re-energize it. Okay?

The alternates there would be to use our Charlie and Delta, because they're not feeding a auxiliary feedwater or atmospheric dump valves. So there's extra power on our Charlie and Delta batteries. So their priority is going to look at those two for an alternate instrument. Okay?

So our selected instruments for cooldown, we got core exit thermocouples, reactor vessel water level, our steam generator level, wide range, and steam generator pressure, reactor coolant system T_{hot}, T_{cold}, reactor coolant system pressure, subcooling and saturation margin for both reactor coolant system and core exit thermocouples. We got pressurizer level.

Safety injection tank. This is where we use two indicators, one on 2-Alpha and one on 2-Bravo, because we have four of them tied to the loop. So we're making an assumption if these two the pressure and level are going down, the other two that we don't have indication are doing the same thing because they're maintained within tech spec level, they're maintained within tech spec pressure band. So they're tied to the same system. So we expect that it would have the same effect.

1 It's important to know this because when
2 we get down in level we want to isolate it so we don't
3 push nitrogen into the reactor coolant system, in
4 effect being natural circulation with a nitrogen bubble
5 in the steam generator tubes.
6 MEMBER STETKAR: Operator's okay just
7 having sort of having half the plant?
8 MR. EIMAR: It was interesting for
9 especially the new operators. For us old guys that are
10 used to looking at analog indicators to operate the
11 plant -- we've got a lot of new digital stuff in the
12 control rooms now. And so the younger operators that
13 are used to playing with computers since they've been
14 five years old, it was tough for them to -- oh, wait,
15 the computer doesn't work? I have to look at this
16 analog indicator? So it was eye opening to them. But
17 we've been doing that in our simulators. Take away the
18 computer to make them look at that stuff. And so it
19 was interesting, and especially with just one channel.
20 MEMBER STETKAR: Yes, that's what I was
21 getting to.
22 MR. EIMAR: Yes, it was --
23 MEMBER STETKAR: Switch over from normal
24 to alternate displays --
25 MR. EIMAR: Alternate, yes.

1 MEMBER STETKAR: -- you only got sort of
2 half of that stuff available.
3 MR. EIMAR: Yes, and you get one of them.
4 And so, but they did well. They accepted it
5 -- understood the reason for it, because we want to
6 extend battery life. So as long as you can provide an
7 operator justification for why we're doing something,
8 then they're okay.
9 Also we looked at containment pressure.
10 Then we got atmospheric dump valve position for the
11 control room. And then we want to look at auxiliary
12 feedwater flow for each of the steam generators,
13 because we do a symmetrical cooldown. At Palo Verde
14 we use both steam generators.
15 MEMBER REMPE: What about water sources?
16 Why don't you have like a water level in the condensate
17 storage tank or the --
18 (Simultaneous speaking)
19 MR. EIMAR: Well, because it's available
20 locally as a manual indicator, so we don't have to have
21 that in the control room.
22 MEMBER REMPE: Okay.
23 MR. EIMAR: And it's not going to go down
24 that fast.
25 So get to symmetrical cooldown. We cool

down at 70 degrees an hour. So somewhere between 70 and 100 degrees per hour. We want to cool down in three hours. So we're cooling down from a normal operating pressure down to 360 degrees T_{cold} and the steam generator pressure 155 pounds. And in addition to that we're going to feed the steam generators up outside the 40 to 60 percent range up to 80 to 85 percent so that if we did have a problem with our auxiliary feedwater pump, it gives us about 20 to 30 more minutes of water that we can use to remove heat to troubleshoot that pump and get it back in service.

MEMBER BLEY: Yes, and that's right after shutdown, so a few hours in --

MR. EIMAR: Yes, that's right.

MEMBER BLEY: -- you have a lot more time.

MR. EIMAR: Yes, a few hours in, if we have a problem, we have more time. Right.

So then at the two-hour point we expected the battery load shed would be completed. Also at that point we need to open up our doors to our turbine-driven auxiliary feedwater pump because it's lost its cooling. So at Palo Verde our turbine-drive aux feedwater pump sits in a room probably a third the size of this room. And so it's got a turbine-driven pump in there. It needs to be ventilated. The issue is actually the

1 controller itself overheats. At 150 degrees it
2 doesn't control the pump.
3 So by opening up the doors we did a GOTHIC
4 analysis of the thermogradients in the room and
5 determined that the room temperature never exceeds 135
6 degrees no matter what the outside air temperature is
7 by opening the doors outside so that the pump will
8 continue to operate indefinitely without an impact from
9 temperatures.
10 MEMBER STETKAR: It's pretty warm if the
11 operator's got to be in there.
12 MR. EIMAR: Pretty warm if the operator's
13 got to go in there, but we do have portable fans that
14 we put in there to ventilate for operators. But we
15 don't need to do that for the equipment.
16 MEMBER STETKAR: No electricity though.
17 MR. EIMAR: Yes. What's that?
18 MEMBER STETKAR: No electricity yet.
19 MR. EIMAR: Well, no electricity yet, but
20 when we get electricity, we'll be okay.
21 So at the four-hour point, three hours
22 later, we have the cooldown complete by four hours after
23 the event.
24 We assumed at 16 hours that the nitrogen
25 goes away from the atmospheric dump valves that may

still be there; may not. At that point we might need to send an operator in every once in awhile to close down the atmospheric dump valves because you've completed your cooldown and decay heat is lowering. So you're going to maintain your pressure at 155 pounds. So you want to close down that atmospheric dump valve to keep that pressure to run the auxiliary feedwater pump.

And then at hour 34 we need to bring over our --

MEMBER STETKAR: I'm sorry, close down the atmospheric dump you said when the nitrogen goes away? Atmospheric dumps has got to fail closed on loss of nitrogen.

MR. EIMAR: Yes, but go down and manually --

MEMBER STETKAR: Crack them open.

MR. EIMAR: -- open. And they might have to send an operator in every once in a while to close them.

MEMBER STETKAR: Okay.

MR. EIMAR: Right?

MEMBER STETKAR: Thanks.

MR. EIMAR: Okay. Thirty-four hours is when Palo Verde needs to get an AC power source because

of the amount of water that we have and the size of our batteries. The first thing is with the 25-gallon-a-minute leak we need to get a charging pump running about at the 34-hour point. So by 34 hours we'll have moved over if we're able 800 kW generators. Put them onto our 480-volt load centers so we can provide power to battery exhaust fans, a battery charger, a charging pump, maybe control room fans. And if for some reason you happen to have pressurizer level, you could have pressurizer heaters, but that's just only on there because it's one source. Once you get enough water in there you'll be able to use pressurizer heaters.

MEMBER CORRADINI: So at 34 hours these come from where?

MR. EIMAR: These are going to come from the FLEX storage facility on site.

MEMBER CORRADINI: On site? Okay.

MR. EIMAR: On site. This is really when we use the first piece of Phase II FLEX equipment.

MEMBER CORRADINI: So this comes from the bunkered facility on site?

MR. EIMAR: Yes, at Palo Verde we have -- our protection is a little bit different than everybody else because our hazards are only seismic and

high heat. So currently they're on a seismic pad and they're seismically restrained for the seismic event. So we'll move that equipment over from the storage area to the units.

MEMBER BLEY: In a seismic building?

MR. EIMAR: It's the seismic pad itself and then the building that's going around that. We won't have a building around it until next year.

MEMBER BLEY: But it will be a seismically --

(Simultaneous speaking)

MR. EIMAR: Yes, it will be a seismic structure. Yes, it's ASCE-7-10, a rugged structure.

MEMBER BLEY: Have you installed some kind of quick connects for hooking these things up?

MR. EIMAR: Yes, we did. Yes, the 480-volt -- I don't know if -- they're a 180 --

(Simultaneous speaking)

MEMBER BLEY: I haven't seen any of the stuff.

MR. EIMAR: Okay. Yes, it's 180 turn. And if you get to see our video, you'll see the guys putting it together.

MEMBER BLEY: Oh, I'd like to see that, yes.

1 MR. WEBSTER: We'll have some pictures of
2 connections --
3 (Simultaneous speaking)
4 MR. EIMAR: Yes.
5 MR. AMWAY: The same for mine. You'll
6 find that throughout the industry they're pretty
7 standard connections.
8 MR. EIMAR: Yes, we did get a standard
9 connection, so we have to use the stuff from the SAFER
10 Response Centers. And so we're using storage fittings
11 for low-pressure mechanical. And then we have these
12 quick connect 480 volts and then a 4160 or bolted
13 connections.
14 MEMBER BLEY: Okay.
15 MEMBER STETKAR: Gene?
16 MR. EIMAR: Yes?
17 MEMBER STETKAR: You're charging -- I've
18 listened to all this stuff. The charging pumps are not
19 safety-related, I'm assuming.
20 MR. EIMAR: At Palo Verde they are.
21 MEMBER STETKAR: They are safety-related?
22 MR. EIMAR: Yes.
23 MEMBER STETKAR: Okay.
24 MR. EIMAR: Yes.
25 MEMBER STETKAR: So they're

1 seismically-qualified?

2 MR. EIMAR: They're

3 seismically-qualified at Palo Verde. There are three

4 positive displacement pumps.

5 MEMBER STETKAR: There are? Okay.

6 Thanks.

7 MR. EIMAR: Okay. And then at that point

8 we'll have to establish spent fuel pool makeup. Same

9 time frame.

10 MEMBER SKILLMAN: Gene, let me ask you a

11 question.

12 MR. EIMAR: Yes, sir?

13 MEMBER SKILLMAN: If you have made the

14 connections to your generator, your 34-hour generator,

15 if power to come back on from off-site, how is that

16 device protected or those buses protected so there

17 isn't common concurrent --

18 (Simultaneous speaking)

19 MR. EIMAR: The procedure we're going to

20 use when we power up the 480-volt load centers from the

21 FLEX generators will be that we will isolate that load

22 center from its power supply. So the supply breaker

23 to that load center will be opened so that you will not

24 be able to cross-connect, because there's no way that

25 that generator is going to -- you can't -- it's going

to be a dead bus transfer. If I want to get power backing 40 from a normal supply, I'll have to de-energize. I'll have to take this generator out and then restore power from the normal supply.

MEMBER SKILLMAN: Thank you.

MEMBER STETKAR: Four-eighty-volt breaker operation DC control power to the open and closed --

MR. EIMAR: It can be manually operated by auxiliary operators.

MEMBER STETKAR: Closing?

MR. EIMAR: Yes, sir. So it's a spring, right? So you charge the spring, push a button, the breaker closes.

MEMBER STETKAR: But you have an actual button? I mean, a lot of plants don't have those buttons --

MR. EIMAR: Yes, we do.

MEMBER STETKAR: -- that you can release -- you do?

MR. EIMAR: Yes.

MEMBER STETKAR: Good. That's unusual.

MR. EIMAR: Okay. Then at the 36-hour point we'll need to install the RCS makeup pump so we can put additional water in. The normally installed

1 charging pump is our first place of getting water, but
2 then we're going to move over an alternate make up pump
3 per the NEI-12-06 guidance. So we have this alternate
4 pump to inject water. So we'll now have two pumps that
5 inject in the reactor coolant system and make up for
6 the volumetric loss of water.
7 MEMBER STETKAR: Shutoff head on that
8 alternate makeup pump is?
9 MR. EIMAR: This one is 600 pounds.
10 MEMBER STETKAR: Six hundred pounds?
11 Okay.
12 MR. EIMAR: Yes.
13 MEMBER STETKAR: Thanks.
14 MR. EIMAR: And then the safety injection
15 tanks, we figure at about 38 hours they'll be empty.
16 And for this procedure we're defining empty as 10
17 percent, wide range. So that that way we know there's
18 water still in there so we don't put nitrogen in the
19 reactor coolant system. At that point our vent valves
20 are classed DC-powered. So we'll have DC power to
21 those and we'll just open and vent the nitrogen in the
22 containment so that the passive injection no longer
23 works. It will go below RCS pressure.
24 And at that point we'll also install the
25 FLEX or alternate secondary makeup pump. So it would

be one that's stored at the FLEX building so that it can eventually take over for the auxiliary feedwater pump.

MEMBER STETKAR: Safety injection tanks vent into the containment, or they vent in the --

MR. EIMAR: They vent into the containment.

MEMBER STETKAR: They do?

MR. EIMAR: Yes, they vent into the containment.

MEMBER STETKAR: That's different also.

MEMBER CORRADINI: So can you go back to 42, because you said --

(Simultaneous speaking)

MR. EIMAR: Sure.

MEMBER CORRADINI: No, no, no, no, no. Not --

MR. EIMAR: Forty-two hours?

MEMBER CORRADINI: Yes, T plus 42.

MR. EIMAR: Yes.

MEMBER CORRADINI: So what happens there again? Excuse me.

MR. EIMAR: Okay. Well, I was doing 38. I'm going to 42 now.

MEMBER CORRADINI: Okay. I'm sorry.

1 MR. EIMAR: At 42 the condensate storage
2 tank is essentially empty. Okay.
3 MEMBER CORRADINI: Well, that's fine,
4 but --
5 MR. EIMAR: Right. So we --
6 MEMBER CORRADINI: -- what I understand is
7 now you're not going to use aux feed anymore and look
8 for a different water supply.
9 MR. EIMAR: No.
10 MEMBER CORRADINI: You're going to go to
11 a different pump.
12 MR. EIMAR: No, I'm still going to
13 continue to us auxiliary feedwater if I can.
14 MEMBER CORRADINI: Oh, okay.
15 MR. EIMAR: If I have enough decay heat and
16 enough pressure to run it, I will. What I do is I swap
17 its suction to a reactor makeup water tank --
18 MEMBER CORRADINI: Okay.
19 MR. EIMAR: -- at Palo Verde, which is its
20 normal alternate suction. So the combination of those
21 two tanks gives me beyond 72 hours of water. Okay?
22 That's what I said earlier, we had 72 hours of water.
23 MEMBER CORRADINI: Okay.
24 MR. EIMAR: And I was thinking more
25 normally and Mike was thinking just the CST. So, but

if that doesn't work, I also have an alternate strategy to move water from my refueling water tank into the condensate storage tank. So I will be using borated water to feed the steam generators. And we'll talk about that in a minute. I've got a slide on that.

MEMBER CORRADINI: But I just want to make sure --

MR. EIMAR: Sure.

MEMBER CORRADINI: -- I thought you said you'd go to a FLEX pump. But at this point we're still trying to find the appropriate water supply for the aux feed?

MR. EIMAR: Well, the aux feed water pump normally sucks from the condensate storage tank. At the 24-hour point when I don't have any water left, I will swap it over to the reactor makeup water tank. And that would be a source of water for that other pump when I get it installed.

MEMBER CORRADINI: Okay.

MR. EIMAR: What I'll do is I'll transfer water into my condensate storage tank and use the alternate pump. Okay?

MEMBER RAY: Before we move on --

MR. EIMAR: Yes, sir?

MEMBER RAY: -- let's stop for a second

1 here and think about the reactor coolant system
2 inventory. So we've been leaking out of the four
3 reactor coolant pump seals at 25, you said.
4 MR. EIMAR: Well, initially it was 25.
5 Yes, sir.
6 MEMBER RAY: And it declines as pressure
7 is brought down.
8 MR. EIMAR: Right.
9 MEMBER RAY: And you've got some shrinkage
10 taking place. But all of that you can still persist
11 with natural circulation to 36 hours before making up
12 to the reactor coolant system?
13 MR. EIMAR: That's correct.
14 MEMBER RAY: What's the level in the
15 reactor vessel at that point in time?
16 MR. EIMAR: Basically the upper head, we
17 have four level indicators, right? And when you go
18 below, it basically shows a bubble.
19 MEMBER RAY: Yes.
20 MR. EIMAR: The largest bubble we expect
21 to get, it would be three of those indicators would
22 indicate a void. So we still have water in the upper
23 head.
24 MEMBER RAY: Okay.
25 MR. EIMAR: At 21 percent minimum level.

1 MEMBER RAY: And when we're doing this
2 sometimes we get confused between best estimate and --
3 MR. EIMAR: Right.
4 MEMBER RAY: -- decay heat level. What
5 are we using?
6 MR. EIMAR: Best estimate decay heats.
7 MEMBER RAY: Okay.
8 MR. EIMAR: We did not use the one we would
9 use for an accident analysis.
10 MEMBER RAY: Right.
11 MR. EIMAR: Right?
12 MEMBER RAY: Okay.
13 MR. EIMAR: Okay? Anything else?
14 MEMBER RAY: No.
15 MR. EIMAR: Okay. The next one would be
16 at about hour 72. At that point we would have -- now
17 this is where -- 4160, where it's in here. It's part
18 of our guideline, but Palo Verde can cope to the 72-
19 hour point for indefinite coping with 480 volt. We
20 don't need 4160 for coping. We're going to get 4160
21 from the National SAFER Response Center as
22 defense-in-depth. Because when I initially power up
23 the buses, the 480-volt, I'm going to power up one side
24 of the Alpha side. When I get the 4160, I can tie it
25 onto the Bravo side and it gives me those four 180-volt

1 buses. So it will give me additional equipment. So
2 the 4160 for Palo Verde is like a defense-in-depth, so
3 it's like I want to say FLEX-plus. It gives us the
4 other side to energize with the SAFER Response Center
5 generators that we'll be receiving.
6 At that point at Palo Verde when we trip
7 our control rods we're at a negative 14,000 pcm of
8 reactivity, so we don't have a restart concern. And
9 the lowest shutdown margin is at 72 hours is a
10 Keffective of 0.93. So we're in good shape there from
11 a restart concern.
12 And then at that point we also have our
13 water reclamation facility at Palo Verde. That's
14 where we get our cooling water from. And we have a
15 pipeline that we can install. We have a contract with
16 a vendor that will fuse together some 12-inch
17 high-density polyethylene 20-foot sections of pipe. A
18 crew of 26 people in 48 hours can run the pipe from water
19 rec over to the units to give us water reclamation
20 water, if we needed to use it. So we get plenty of water
21 from water rec.
22 MEMBER RAY: I guess one other point from
23 the members here, it's important on this -- reactor
24 coolant inventory is a concern of mine.
25 MR. EIMAR: Yes.

1 MEMBER RAY: Is you get the pressure down
2 so you can get the safety injection tank inventory added
3 to the RCS inventory is what makes all of this work from
4 an RCS inventory standpoint.
5 MR. EIMAR: Yes, sir.
6 MEMBER RAY: So you got to get that
7 cooldown, not just remove decay heat, but get the
8 cooldown going to reduce the pressure to the point where
9 the safety injection tanks will dump into the RCS.
10 MR. EIMAR: Yes, that's the whole purpose
11 of cooling down --
12 MEMBER RAY: Absolutely.
13 MR. EIMAR: -- to decrease that leakage
14 through the seal and then get the safety injection tanks
15 --
16 (Simultaneous speaking)
17 MEMBER RAY: In the past we would just
18 stand by --
19 MR. EIMAR: And we'd just sit there and
20 wait, yes.
21 MEMBER RAY: -- and naturally circulate
22 and remove decay heat that way.
23 MR. EIMAR: Yes, sir.
24 MEMBER RAY: But then you run out of RCS
25 inventory much quicker than this.

1 MR. EIMAR: Yes.

2 MEMBER RAY: So to get credit for the SIT

3 tanks you got to get the pressure down.

4 MR. EIMAR: Right. And to back up our

5 strategy -- we did CENTS analysis to do that. So the

6 CENTS analysis validated what we wanted to do, and we

7 used that to help us develop the strategy.

8 MEMBER CORRADINI: What analysis? I'm

9 sorry.

10 MR. EIMAR: CENTS. It's a code, a

11 computer code.

12 MR. BAUER: It's a thermohydraulic code

13 for CE plants.

14 MEMBER CORRADINI: Oh, okay.

15 MR. EIMAR: Okay?

16 MEMBER SKILLMAN: Gene, when you say

17 you've reached our lowest shutdown margin of decay

18 effective --

19 MR. EIMAR: Yes, sir.

20 MEMBER SKILLMAN: -- are you

21 communicating that it will not go lower than 0.93?

22 MR. EIMAR: Yes, it won't go any closer to

23 Keffective equal to one, right. This is as high

24 -- Keffective is 0.93.

25 MEMBER SKILLMAN: That's the greatest

1 that it's going to be?

2 MR. EIMAR: Right. As far as Keffective,

3 that's the largest it's going to be.

4 MEMBER SKILLMAN: Thank you.

5 MR. EIMAR: Yes, the 14,000 pcm on

6 negative reactivity.

7 MEMBER SKILLMAN: Okay. Thanks.

8 MR. EIMAR: Okay? And then also the

9 safety injection tanks when they go in add borated

10 water, so that helps out.

11 MEMBER SKILLMAN: Okay.

12 MR. EIMAR: Okay? And then at 75 hours is

13 when we would be putting on the alternate pump, if

14 required. Because at that point we figure we got

15 really low decay heat and it would be good to have a

16 FLEX pump running to feed the steam generators.

17 MEMBER CORRADINI: Because it's not

18 steam-driven?

19 MR. EIMAR: It's not steam-driven.

20 That's correct.

21 MEMBER CORRADINI: Okay. So at least at

22 Palo Verde the strategy is to stay with the aux feed

23 as long as possible?

24 MR. EIMAR: As long as possible. That's

25 correct.

1 MEMBER CORRADINI: But it is available at
2 about the 36-hour point -- well, the 38-hour point it's
3 available, so if I needed it before then, I could have
4 it.
5 MEMBER CORRADINI: Okay. But that's an
6 on-site FLEX pump?
7 MR. EIMAR: It's an on-site FLEX pump.
8 That's correct.
9 The only thing that's here that comes from
10 the National SAFER Response Center for this timeline
11 is the 4160 generators at the 72-hour point.
12 Everything else that's on here is either an installed
13 component or comes from the Phase II stuff stored on
14 site.
15 MEMBER CORRADINI: And then the only other
16 thing I guess, just to make sure I understood your
17 timeline, is that you do need power at 34 hours to --
18 MR. EIMAR: Right.
19 MEMBER CORRADINI: -- do the venting of
20 the safety injection tanks, etcetera, etcetera.
21 MR. EIMAR: We don't need the power to vent
22 the safety injection. We need the power to power up
23 a charging pump so that we maintain natural circulation
24 to go to reflux cooling. So the priority there is to
25 get injection into the reactor coolant system. But by

1 getting that generator to power the 480, I get a battery
2 charger which allows me DC power, but I do have adequate
3 DC power without that to vent the safety injection
4 tanks.
5 MEMBER CORRADINI: Oh, you do?
6 MR. EIMAR: Yes.
7 MEMBER CORRADINI: Okay.
8 MR. EIMAR: Because of the tanks -- the
9 particular vents that we selected. So we would have
10 adequate. Okay? But the primary purpose is to get RCS
11 injection to make up for the volume loss of water.
12 Okay. We already talked about this. The
13 safety injection tank, we're going to have the
14 operators at about 500 degrees start monitoring the
15 level. We may revise this in the future because when
16 we did it in the simulator it was way early. We could
17 probably wait until about 400 degrees to start
18 monitoring it, but it's one of the things we're looking
19 at for a future revision to the procedure. So that way
20 we don't forget that we have to worry about nitrogen
21 getting into the RCS. And I said before, a 10 percent
22 wide range we'll vent the safety injection tank to
23 containment atmosphere so that that way the passive
24 injection will no longer function.
25 So to exit this procedure, there's just

1 three ways you can get out of it, is basically you
2 restored a class 4160 bus. So you have capability from
3 diesel generator from the grid to restore that 4160 bus.
4 That's one way to get out of it.
5 The other one is that we -- basically the
6 emergency coordinator directs the unit to enter
7 procedures basically developed by the tech support
8 center. Now we may have alternate generators on site
9 and we'll create a procedure to get there.
10 And the other one is if conditions have
11 degraded where you're going to get core damage, you're
12 no longer in FLEX support and you need to go to the
13 Severe Accident Management Guidelines, if necessary.
14 MEMBER CORRADINI: Gene, what powers your
15 tech support center?
16 MR. EIMAR: What powers the tech support
17 center? At Palo Verde it's got its own diesel
18 generator, which is not seismic and may fail.
19 MEMBER CORRADINI: Okay.
20 MR. EIMAR: But for communications we've
21 done a communications modification so that we'll still
22 be able to communicate and have computers. So they
23 will have a way to communicate with the control room,
24 if they need to. But this -- at the point you get here
25 for the tech support center taking over would be beyond

1 24-hour time frame.

2 MEMBER BLEY: Gene, do the SAMGs, or will

3 the SAMGs recognize the existence of the FLEX

4 equipment?

5 MR. EIMAR: They don't now, but they will.

6 The issue is like steam generator fill for our Severe

7 Accident Management Guideline, right now it takes water

8 out of our circ water canal --

9 MEMBER BLEY: Yes.

10 MR. EIMAR: -- through a fire truck and it

11 pumps it into vents on the feedwater system inside our

12 turbine building. Well, that doesn't work for this

13 event because the turbine building is not seismic and

14 we don't want to us circ water because circ water is

15 really dirty. So we had to change the injection point.

16 We had to change the water sources.

17 So I'd expect eventually that as we get

18 done with this project that we'll go back and modify

19 the SAMGs and realize that there's other places you can

20 inject water. And it makes it a little bit easier

21 because of the connections and where they're located.

22 At Palo Verde we took the option of most of all of our

23 mechanical connections are outside the building. We

24 don't do anything inside the building. So from the

25 wall of the plant into the injection point it's

1 hard-piped. So we welded pipe all the way down. And
2 we have isolation valves.
3 For our electrical connections we have a
4 plug-in on the wall on the outside of the building. And
5 then inside the building it's cable inside conduit that
6 goes to either a breaker or a disconnect switch or
7 something so that we don't run hoses or cables inside
8 the plant. With the exception of one of our pumps, our
9 alternate RCS injection pump can be installed on 100
10 foot of our auxiliary building. And that will have a
11 short run of pipe, or a short run of hose to install
12 it to the piping.
13 But the primary strategy is external to the
14 plant. So we specifically did that because of our
15 weather conditions. It gets hot and will be really hot
16 in the building, so wanted to minimize the amount of
17 hoses and cables that we had people hauling through the
18 plant in the heat.
19 MR. AMWAY: And our SAMGs will recognize
20 the FLEX equipment as well.
21 MEMBER SKILLMAN: Let's just pull on that
22 thread. For Nine Mile under 7 to 10 feet of snow how
23 do you do this?
24 MR. AMWAY: Well, there's snow removal
25 equipment that we'll have. I mean, we do have --

1 (Laughter)

2 MR. AMWAY: -- removal equipment. We're

3 certainly used to snow, in feet, not inches, and we have

4 sufficient snow removal equipment that will be able to

5 clear paths, keep the access paths clear.

6 We'll get an opportunity to see one of the

7 pieces of debris removal equipment we have that will

8 certainly push the snow out of the way.

9 MEMBER SKILLMAN: I wasn't trying to be

10 razzle-dazzle. I was just -- it's real, and we're

11 seeing that right now.

12 MR. AMWAY: Absolutely. That's correct.

13 MEMBER SKILLMAN: Yes. Thank you.

14 MR. EIMAR: We'll just wait for ours to

15 melt, I think.

16 (Laughter)

17 MR. EIMAR: One of the major appendices in

18 our FLEX Support Guidelines is our Appendix Alpha,

19 which is the DC load shed. And again, that's to extend

20 the life of the class batteries primarily so we can

21 maintain heat removal with aux feed water and

22 atmospheric dump valves. It allows for continued

23 operation of those two pieces of equipment from the

24 control room. We wanted to make sure the control room

25 operators were doing it rather than someone in the field

on a sound-powered headset. And it complicates things the more people have to communicate with. But that is our alternate, is to operate in the field using sound-powered phones.

We want to get this accomplished in less than two hours, because every minute you delay getting it, it shortens the life of the batteries. If we took up to nine hours after the event to complete this, the batteries only last 24 hours, so we would lose a little over a minute for every minute that we delay. So it's important to get this done. It was emphasized with the operators. They understand that. The auxiliary operators that we had walked it down, understood the importance of it. So it's quite an extensive list.

And as I mentioned earlier it lists the breaker number and the equipment that's being supplied. So if you needed to pick an alternate instrument or an alternate component, you'd say, okay, I've lost the Bravo this. I'm going to go to Charlie that. And now you have a breaker number. Send and AO out. Hey, go close this breaker. He knows which one to close.

MEMBER BLEY: Is all of the DC load shed -- by analysis and walkdown is there any effort during the shutdown to see what -- the thing I'm thinking about is at least in some places I've been things like DC can

leak through places you don't expect and if you don't actually go through and open breakers and see what happens, you might get surprised.

MR. EIMAR: We did not go through and open breakers in an operating unit. To do this it was based upon system analysis of the drawings, the plant drawings and things like that. And it's pretty clear when you get on the class side.

And then this is one of the things we talked about: if we got into this event where would there be a problem? Well, if I started down this line and I've got an AO and I send two AOs out and in a half an hour they get this done, and then 20 minutes later I get DC power. I haven't completed the cooldown and I haven't got my FLEX equipment to energize any of the buses so I could start restoring things and get a battery charger back in service, but then I can send AOs out to re-close the breakers that they'd opened. So the only impact on this would initially be that I cool down a little bit and now I've stabilized and I've got some DC loads that are de-energized that I now want to re-energize.

MEMBER STETKAR: Have you looked at what happens if you re-energize those things? Because I've seen plants where stuff locks in --

MR. EIMAR: Locks in, right. Yes.

1 MEMBER STETKAR: -- and when you bring
2 power back --
3 MR. EIMAR: Right.
4 MEMBER STETKAR: -- stuff does stuff that
5 you didn't really expect it to do.
6 MR. EIMAR: Yes.
7 MEMBER STETKAR: It's not a clean --
8 MR. EIMAR: Yes, we know that is a
9 possibility. But again, we did not go out into the real
10 plant and de-energize it to see what that impact would
11 be.
12 MEMBER STETKAR: Well, it isn't even
13 de-energized. It's when you bring power back.
14 MR. EIMAR: When you bring it back, right.
15 MEMBER STETKAR: There's stuff locked in
16 that you didn't recognize that that valve is going to
17 go open because there's something --
18 MR. EIMAR: Well, right. For valves and
19 things like that we do have -- for actuation systems
20 we do have procedures for de-energizing them during
21 outages. So we know the impact from that sort of thing
22 from our outage experience when we de-energize buses.
23 So for component movement. But instruments that may
24 lock in at a certain value we don't necessarily know
25 that.

1 What we did for the simulator, one of our
2 simulator instructors was able to trick our simulator
3 into the load shed. So it was interesting to watch the
4 crews, because as they're responding the plant, this
5 would go away, that would go away. And he did it as
6 an AO going out there to de-energize equipment. Then
7 he also simulated the -- even though the non-class
8 batteries are in a non-seismic building, we left those
9 energized for the event. And then they went away after
10 a certain period of time because our computer is
11 non-class powered. So that computer went away and that
12 shifted them to specifically looking at analog meters
13 that were energized.
14 MR. AMWAY: And I wanted to address that
15 because that point is well taken. Sometimes it's not
16 when you lose the power. It's when you're bringing it
17 back.
18 MR. EIMAR: Bringing it back, yes.
19 MR. AMWAY: And our restoration
20 procedures will generally -- where that DC power
21 impacts instrumentation and control for systems we will
22 generally take manual action to remove that equipment
23 from service, put a pump control switch and pull the
24 lock, de-energize, whatever, to make sure that it won't
25 automatically restart when you re-energize the load.

1 MR. EIMAR: And we learned that the hard
2 way many years ago at Palo Verde when we de-energized
3 things and then re-energized them. And, oh, that comes
4 on. So as I said, now we've got it into our outage so
5 that we control that activity so we don't get auto
6 starts or things failing when we bring power back.
7 Okay?
8 MEMBER BLEY: At least from your
9 experience in outages a lot of this has actually
10 been --
11 MR. EIMAR: Right. Yes.
12 MEMBER BLEY: -- is coming through.
13 MR. EIMAR: These parts. I mean, never
14 have we --
15 MEMBER BLEY: Yes, not the whole thing.
16 MR. EIMAR: Not the whole thing, but bits
17 and pieces --
18 (Simultaneous speaking)
19 MR. EIMAR: -- over the years.
20 MEMBER BLEY: Okay. Yes.
21 MR. WEBSTER: And a lot of these are built
22 on existing procedures that are like maintenance
23 operating procedures where you're taking this thing out
24 of service so that information is used to determine
25 what's going to happen, when the power can move and it's

1 been validated through the outages again.

2 MR. EIMAR: Okay. The next couple of

3 appendices are important because they give us the

4 control room -- the status of the plant. So we send

5 operators out to do walkdowns. The primary walkdown,

6 that's going to look at the spent fuel pool gate seals

7 and ensure there's no issue there. So he goes and

8 verifies it. We've done a modification to our spent

9 fuel pool gates to supply an extra air supply bottle

10 at the 100-foot elevation.

11 MEMBER BLEY: I've lost that slide a

12 little bit.

13 MR. EIMAR: Okay.

14 MEMBER BLEY: What trigger is doing this

15 Appendix B walkdown?

16 MR. EIMAR: Oh, this is when you get into

17 the procedure.

18 MEMBER BLEY: Yes.

19 MR. EIMAR: You've sent a AO or two out to

20 do the DC load shed. Now you've got a couple other AOs,

21 going to send them out to do other things.

22 MEMBER BLEY: This is like the next thing

23 you after that?

24 MR. EIMAR: This is the next step, right.

25 MEMBER BLEY: Okay.

1 MR. EIMAR: So they're going to go out and
2 do this walkdown, the primary guys. We purchased as
3 a response to IER-11-4 some submersible instruments for
4 a spent fuel pool level and temperature. You drop them
5 in the pool and it tells you the temperature where the
6 probe is at.
7 MEMBER BLEY: Yes.
8 MR. EIMAR: It tells the height of water
9 above it. This is not part of FLEX because it doesn't
10 meet the order for spent fuel pool level, but it's the
11 defense-in-depth that we have at Palo Verde. So one
12 of the actions is the guy will put those in the pool.
13 They have a remote indicator on a cable. You run it
14 out and you can tell what the spent fuel pool level and
15 temperature is. We'll probably run it outside the
16 building where our makeup connections are to give the
17 people operating out and indication where the spent
18 fuel pool level is.
19 MEMBER BLEY: Oh, from outside?
20 MR. EIMAR: From outside, right. Yes,
21 because it's on a cable and the temperature probe that
22 goes into the water.
23 MEMBER BLEY: Right.
24 MR. EIMAR: And then it's got wiring that
25 you can run down and, you know, be a couple of hundred

feet away and tell what the level is.

MEMBER BLEY: Is that a common thing? I've never heard of --

MR. EIMAR: It's not. No, it's not common.

MEMBER BLEY: Okay.

MR. EIMAR: They're on the instruments that we purchased in response to INPO's IER-11-4.

MEMBER BLEY: Okay.

MR. EIMAR: Because that was the guidance we had earlier before we had the orders.

We're going to open up our fuel building roll-up door because we're going to -- the strategy in the spent fuel pool is to have it boil, and we want somewhere for that steam to go. So that's going to go out through the full building roll-up door.

He's going to look at the status of equipment that's necessary, like anything in the aux building. He's going to make sure that there's some containment integrity actions he needs to take. We have one valve that does not close. It's a chill water valve. But there is check valve on that line, so it needs containment integrity. But we'll have manual capability of closing that valve to ensure that everything else in the containment is bottled up so we

1 have containment integrity.

2 He's going to look at the spent fuel pool

3 status, get level, temperatures, things like that.

4 Then he's going to go out and look at our reactor makeup

5 water tank, because it is a backup to our condensate

6 storage tank, to ensure that it's available.

7 Then he's also going to look and see if

8 we're doing any dry cask storage operations and make

9 sure that those guys are aware of what's going on and

10 that they can put it in a safe condition. They have

11 procedures to put it in a safe condition with loss of

12 power. So if we're doing dry cask operations --

13 MEMBER BLEY: There's nothing active

14 going on out there, is there, unless you're moving a

15 cask?

16 MR. EIMAR: Well, at Palo Verde we have

17 fuel movements going on in the fuel building almost all

18 the time because we do an outage every six months. And

19 so either you're moving in new fuel --

20 MEMBER BLEY: Yes.

21 MR. EIMAR: -- or moving out old fuel or

22 you're refueling your reactors.

23 MEMBER BLEY: So there's pretty much

24 something going on all --

25 (Simultaneous speaking)

1 MR. EIMAR: So the fuel team stays pretty
2 busy between the three units.
3 MEMBER BLEY: Yes, okay.
4 MR. EIMAR: Secondary operators are going
5 to look at the condensate storage tank. This is where
6 he can go get the local level of the tank to ensure that
7 there's adequate level there.
8 He's going to look at the main turbine
9 generator, if the turbine building survives the event.
10 We're going to vent the hydrogen from the generator
11 because once the seal oil pump goes away on loss of
12 power, it's going to free release hydrogen to the
13 building and we'd rather vent it outside than have it
14 go in the turbine building and cause potential for
15 fires.
16 He's going to break condenser vacuum.
17 Then we're going to isolate our diesel generator -- yes,
18 sir?
19 MEMBER STETKAR: Do you think about a fire
20 starting when you vent the hydrogen? I've seen
21 hydrogen vents open up and you get nice flames out of
22 the vent.
23 MR. EIMAR: Right. Ours vents outside
24 the building, so we're in good shape. But you could
25 have a fire; that's true.

1 MEMBER STETKAR: Yes.
2 MR. EIMAR: But again the rules for
3 NEI-12-06, there's no other event. So at this
4 particular time there is no fire.
5 MEMBER STETKAR: Okay. So according to
6 the rules the hydrogen --
7 MR. EIMAR: Yes.
8 MEMBER STETKAR: -- knows that it's not
9 going to burn.
10 MR. EIMAR: Yes, it does what it's
11 supposed to do.
12 (Laughter)
13 MR. EIMAR: It follows the rules. It
14 knows what they are.
15 MEMBER STETKAR: No, I'm mean, seriously.
16 I've actually vented hydrogen --
17 MR. EIMAR: I know, yes.
18 MEMBER STETKAR: -- and you get -- it's not
19 a big flame, but it is a flame.
20 MR. EIMAR: Oh, it's a flame.
21 MR. AMWAY: If I could add to that just a
22 second, I mean, because boilers have the same hydrogen
23 in the generator.
24 MR. EIMAR: Yes.
25 MR. AMWAY: That process of venting off

the hydrogen initially before you even purge it with Co2 is really no different than you'd do under normal ops. It goes right up the vent pipe. I mean, it's designed for that function, to vent off the hydrogen.

MR. EIMAR: And we do this every outage.

MEMBER STETKAR: I'm just saying about distractions of what's going on. My God, we have a fire going on.

MR. EIMAR: And you're right, that's important, but our fire department -- Palo Verde has our own fire department on site and their priority is the reactor first.

MEMBER STETKAR: Yes.

MR. EIMAR: And if the turbine building burns, the turbine building burns.

MEMBER STETKAR: Okay.

MR. EIMAR: There's no equipment in the turbine building I need to respond to this event. So the priority rests with maintaining core and the spent fuel pool.

MEMBER STETKAR: Okay.

MR. EIMAR: So the next thing we're going to do is we're going to isolate the starting air receivers for the emergency diesel generators. We don't have a leaky air system, but we want to make sure,

so we're going to get as close as we can to the accumulator so that if I do get a diesel back, I'll have starting air for it so I can run it.

We're going to look at the nitrogen system status, instrument air, fire protection, if those survive the event. Then we're going to look at the turbine-driven auxiliary feedwater pump. Make sure that there's no issues down there. He's also going to look at our transformers and our spray ponds and see what their status is.

Then the control room is basically going to keep track of all those actions. They're going to track the status of the information gathered by the auxiliary operators. They're going to keep track of the class battery status. They're going to direct that the main turbine generator hydrogen will be vented, to make sure that it is done. They're going to track the starting air receiver status, coordinate with water rec and fire department for providing water to the units. Because if I don't get to install that piping in, at Palo Verde we have enough fire hose and fire vehicles to pump water over from water rec if I needed to. And they're also going to look at the nitrogen usage for the atmospheric dump valves to ensure that they last for 16 or more hours.

1 So at Palo Verde we rank water so we can
2 determine what is a priority, to let operators know,
3 here, this is the water you want to use. We contracted
4 with Westinghouse to do this. They had a 1 to 10
5 ranking system, 1 being the best. So our condensate
6 storage, demin water, surge rinse tank, those were
7 things that were high on the list. We got down to the
8 cooling water and evap ponds. That's the water don't
9 want to use. So it was lower on their list. So just
10 a way of prioritizing water to help the operators. If
11 you go to an alternate source, here's a place to get
12 water from. But our strategy relies on using the
13 condensate storage tank, reactor makeup water tank.
14 So that that water is all ranked as a one.
15 Then we have a Appendix Kilo. This is
16 where we get into security, because we're going to pop
17 open security doors. So it basically provides a list
18 of doors that will be open to implement the guideline.
19 It notifies security of the doors. And in particular
20 we're going to open up the roll-up door, turbine
21 building aux feedwater pump, which is a vital area that
22 opens that up. Control building doors, if we need to
23 ventilate the control room, and supply the 480-volt
24 load centers, if we have to go an alternate way to do
25 that.

1 So we get into this. Security has to
2 consider implementation of 10 CFR 73.55(p). that you
3 have to declare 10 CFR 50.54(x). So the control room
4 is going to be -- this will be place per the regulations
5 where you would have to get 50.54(x) for them to deviate
6 from the security plan. But initially when you're in
7 the event, up early, when you start de-energizing class
8 batteries and deviating for your station blackout
9 procedure, you'll probably want to consider 50.54(x)
10 at that time.
11 Then Appendix Tango is another one of our
12 appendices that talks about deployment of the
13 equipment. We divided our delivery into three
14 different packages based upon priority. Our first
15 priority is communication vehicles. We want to be able
16 to communicate off site. We did modifications at Palo
17 Verde that allows us -- we put a satellite on Unit 1's
18 control building. It's seismic, so it's a satellite
19 dish that deployable from the control room. We've
20 tested it. We can make outside phone calls with it.
21 And then the three units are connected
22 together with antennas. So Unit 1 has the
23 communication off site, but all three units can
24 communicate at time zero in this event. It's got a UPS
25 backup. But then by the six-hour point we need to

1 install the communication vehicles because they
2 provide a link to areas outside the plant into the
3 protected area for deployment of equipment. So
4 Attachment T-1, Package 1 is communication vehicles and
5 some 10 kW generators to provide light stands and
6 ventilation into the control room, if needed.
7 Attachment T-2, this is where we start
8 moving over the bigger stuff, the 800 kW 480-volt
9 generators. And we move that over and a reactor
10 coolant system makeup pump, because that's the first
11 component we really need to inject water into the
12 reactor coolant system. And then the last one brings
13 over another generator, a spent fuel pool makeup pump,
14 and a steam generator makeup pump.
15 So we have a T-6 schedule that we've laid
16 out for deployment of this. We have the resources set
17 aside. We did this as part of our validation and our
18 staffing study to determine what resources we needed
19 to move equipment. So that's what we did.
20 MEMBER CORRADINI: And this is on site?
21 MR. EIMAR: This is on site. That's
22 correct. This is not the SAFER Response Center
23 equipment.
24 MEMBER CORRADINI: Okay.
25 MR. EIMAR: And that's the end of my

1 presentation. Are there any other questions?
2 CHAIRMAN SCHULTZ: Questions from the
3 Committee?
4 MEMBER RAY: Scott, Arizona still has
5 retrospective rate making, I assume, don't they?
6 MR. BAUER: Retrospective rate --
7 MEMBER RAY: Rate making, yes. Recovery
8 of costs that are prudently incurred?
9 MR. BAUER: Yes.
10 MR. EIMAR: Yes.
11 MEMBER RAY: Okay.
12 MR. BAUER: Fortunately.
13 MEMBER RAY: Yes, we have this discussion
14 sometimes. It's more difficult to recover prudent
15 costs in other places.
16 MEMBER Other questions for Gene?
17 CHAIRMAN SCHULTZ: Was there a video you
18 were going to show?
19 MR. EIMAR: Bill's going to show it
20 after --
21 MEMBER STETKAR: Okay.
22 MR. EIMAR: -- if we have time.
23 MR. BAUER: Yes, so just to check on time
24 here, I know it's break time. We had hoped to get
25 through two presentations by now, so obviously we're

1 running a little behind. But I think if we go through
2 Bill's, it gives the gist of what it took to get to a
3 point of having all this implemented. And then we do
4 have two videos. One is some elevation exercises done
5 at Palo Verde, along with some control room training.
6 And then we have an actual -- the control room video
7 for a control room simulator event that basically shows
8 when this starts, the actions in the control room when
9 they're being taken. And Phil was going to preface
10 that before he started his presentation.
11 CHAIRMAN SCHULTZ: Good. Scott, let us
12 do this: I'm going to call for a break now. I am going
13 to --
14 CONSULTANT SHACK: Well, I'd like to ask
15 a question, Steve, before we --
16 (Simultaneous speaking)
17 CHAIRMAN SCHULTZ: Yes, go ahead, Bill.
18 CONSULTANT SHACK: In 12-06 the only
19 qualification for equipment tells you that portable
20 towable equipment that's designed for over-the-road
21 transport is sufficiently rugged to function following
22 the seismic event. Is there any portable equipment
23 that doesn't meet this requirement that's dependent
24 upon your Phase I and Phase II?
25 MR. EIMAR: No, sir.

1 CONSULTANT SHACK: Communication
2 vehicles, you're not really depending on those?
3 Those are just convenient?
4 MR. EIMAR: Well, they're for
5 communications. They're not to mitigate the event,
6 right? They're to communicate what's going on, but
7 they're also -- they're over-the-road vehicles. I
8 mean, they were built in Idaho. They drove them down
9 from Idaho. Or Montana. Excuse me. Montana.
10 CONSULTANT SHACK: Okay. Thank you.
11 MR. EIMAR: Yes.
12 CHAIRMAN SCHULTZ: Okay. So what the
13 plan will be is I'm going to call for the break. I am
14 going to allow the break to run until 10:20, and that
15 can allow you to organize and make sure that the
16 presentations are ready to go. And we will run those
17 from 10:20 until the time we break for lunch. We are
18 scheduled to break for lunch at 12:00, but I'm expecting
19 we will go into the lunch hour and shorten the lunch
20 hour so we can keep the Committee's schedule relatively
21 in place for the afternoon.
22 I want to thank you, Gene, for your
23 presentation.
24 MR. EIMAR: Thank you.
25 CHAIRMAN SCHULTZ: That was very good this

1 morning to get us started here.

2 I do also want to note since we've been

3 talking about Palo Verde that the Committee is now

4 scheduling a Region IV trip this spring and we are

5 likely to be on site the week of May 18th for a visit

6 to see the equipment we've discussed.

7 MEMBER STETKAR: They may not have heard

8 about this yet.

9 (Laughter)

10 MR. BAUER: It cools off at night in May.

11 CHAIRMAN SCHULTZ: With that, I'm going to

12 recess the meeting for a break.

13 (Whereupon, the above-entitled matter

14 went off the record at 10:07 a.m. and resumed at 10:22

15 a.m.)

16 CHAIRMAN SCHULTZ: I'd like to bring the

17 meeting back into session. I did want to announce for

18 the record that Member Charlie Brown joined us at the

19 beginning of the last session, but was not here for the

20 roll call.

21 And with that, I would like to start the

22 next portion of this morning's meeting. And, Scott,

23 I'll turn it back over to you to tell us where we're

24 headed next.

25 MR. BAUER: I'd like to introduce Bill

1 Webster from Dominion. He's going --- he was in charge
2 of the implementation of FLEX at North Anna 2.
3 MR. WEBSTER: Correct.
4 MR. BAUER: And former STA, so again with
5 an Ops background here. And he's going to walk through,
6 basically, the process of getting this implemented at
7 a site. So, there's a lot of pictures of the
8 installation and stuff like that in his presentation.
9 CHAIRMAN SCHULTZ: Thank you, Bill.
10 MR. WEBSTER: All right. So, again, we're
11 going to talk about the implementation for Dominion and
12 the lessons that we learned. We're going to look at how
13 the strategies and the modifications that we did were
14 developed and installed. We're going to look at we call
15 it the beyond design basis storage facility that houses
16 the FLEX equipment. The site portion of the Phase 3 with
17 the National SAFER Response Center implementation, the
18 programs, the communications that we established, some
19 training, and then finally the validation of the FLEX
20 strategies that we performed at Dominion.
21 So, Dominion fleet, we have two operating
22 units at Millstone. One is a CE PWR and the other one
23 is a Westinghouse 4-loop PWR. There's also a
24 --- Millstone 1 has been shut down and decommissioned
25 now for more than 10 years.

1 At North Anna we have two operating units.
2 They're both Westinghouse 3-loop PWRs, and at Surry
3 it's the same, Westinghouse 3-loop PWR. And Dominion
4 also has Kewaunee unit that was shut down last year,
5 and that's going into decommissioning, so it's not
6 included in discussion of these slides.
7 So, the strategy development, initially,
8 we began the strategy of what to do in an extended loss
9 of AC power following the Fukushima event, basically
10 started with the IER from INPO 11-4. We began at
11 Dominion putting our teams together to look at how to
12 analyze what response we could develop that would
13 prevent core damage with that, and it was a
14 multi-discipline team, including Engineering and
15 Operations in the 11-4 development. So, that went into
16 the Order EA-12-049, and the things that were done for
17 the order was --- the kickoff was from the work that
18 we did prior to the order from 11-4.
19 So, the strategy, we did detailed analysis
20 to determine the timelines and the strategy would be
21 successful, and they included battery analysis
22 following load shedding, and some of Gene's
23 information, he talked about how load shedding allowed
24 batteries to be extended so we maintain DC power for
25 instrumentation.

1 We did secondary auxiliary feedwater
2 source analysis, and determined how much auxiliary
3 feedwater we had, how long it would last, you know, what
4 sources they were to give us a timeline for that.
5 We did the primary calculations,
6 Westinghouse --- the PWROG, the Owner's Group did some
7 work for the Westinghouse sites. And, actually, they
8 did some work for Westinghouse CE & B&W. They gave us
9 some information about how the RCS responded, so
10 Dominion used that information and compared it to
11 applicability to sites, and that determined when we
12 --- when we determined when we needed RCS injection.
13 We also did detailed reactivity analysis
14 to make sure that Keffective less than .99 throughout
15 the event, and some of that analysis that we did was
16 just what is the limiting case, where does it begin the
17 life, end the life, and when exactly we needed a boron
18 addition to maintain criticality after the event.
19 We also did some detail hydraulic analysis
20 to verify that the pumps and equipment that was
21 installed would be successful in delivering the water
22 that was needed. We did some ventilation analysis in
23 various areas to make sure that the equipment would be
24 functional with the loss of power from the normal
25 ventilation equipment, and also those areas would be

accessible for people to get in and do actions in the areas.

And then, finally, was a detailed electrical analysis to make sure that the equipment that we needed to restore the AC power sources would be adequate to meet the loads that were needed to maintain the function that we needed.

So, once we got the analysis done, then we C-the strategies were developed, and then we submitted that to the NRC in response in February 2013. And then after that, we started developing the design changes to implement the modifications and the strategies at the site.

MEMBER BLEY: Bill, before you go to that one.

MR. WEBSTER: Yes. We're going to cover some more details, but ---

MEMBER BLEY: Did you have to do things like open doors, or set up some kind of portable ventilation?

MR. WEBSTER: In some cases we did. In some cases for North Anna, for example, similar to Palo Verde, the turbine-driven aux feedwater pump house temperature was elevated, but if you open the door that temperature was maintained in that room, so that was an example where we had to --- when ventilation now is

closed we had to take an action that would open doors, yes.

MEMBER BLEY: All of that is built into the C-

MR. WEBSTER: All of that is built into the strategies, and the procedures, and the validation that the operators know that that specific door has to be open, and what time frame it has to be opened in. Yes?

MEMBER STETKAR: Bill, one --- I don't care about the details but just sort of general philosophy. I heard one philosophy from Palo Verde about load shedding, where they essentially got you half plant indication. Is that sort of the same philosophy in your fleet, or do you load shed them both down so that you have full indication?

MR. WEBSTER: Generally speaking, that we were load shedding to where you typically had one train ---

MEMBER STETKAR: Okay, thanks. That's all I have was looking for. Thank you.

MR. POWELL: Yes, the concept that we all typically are not --- a lot of us ---

MEMBER STETKAR: That's what I'm trying to get.

MR. POWELL: Rigged for reduced electrical

1 demand, similar to what was done on submarines. And
2 you'd go to a minimum set of instrumentation but to
3 maintain the plant.
4 MEMBER STETKAR: Yes. There's different
5 ways you can get rid of loads. Thanks.
6 MR. WEBSTER: So, we looked at the Palo
7 Verde response and the timeline, and this is just a
8 comparison to similar parameters at our plant. And we
9 talk a little bit about the emergency condensate
10 storage tank, and you can see for North Anna and Surry
11 we basically have about four hours worth of water
12 initially before we have to do some action to add water
13 to the emergency condensate storage tank.
14 And, again, decay heat removal, there's a
15 local manual action to operate the PORVs at North Anna,
16 and again at Surry. For our load shedding it's an 8-hour
17 battery life at North Anna, 14 hours at Surry. Inventory
18 at all of our units we need to make up water prior to
19 17 hours, prior to getting into reflux boiling areas.
20 Actually, the reactivity makeup is many hours later,
21 generally in the 25 to 35-hour range, so the limiting
22 action is generally the RCS makeup.
23 Spent fuel pool, you know, is varying for
24 the pools, about 9 to 12 hours for boiling, and then
25 before the water actually reaches 10-foot above the

1 fuel, you know, between 40 and 60 hours to add water
2 to make sure that we had adequate water in the pool at
3 North Anna and Surry.
4 MEMBER SKILLMAN: Bill, please explain what
5 you mean by local manual operation of the PORVs.
6 MR. WEBSTER: At North Anna, we do actually
7 have capability from doing it in the control room, but
8 after that then it's a handwheel on the PORV and the
9 main steam valve house.
10 MEMBER STETKAR: Well, but do you instruct
11 people to go locally mechanically, manually operate
12 these or what's your strategy?
13 MR. WEBSTER: The procedure we have you
14 start from --- you could do it in the control room as
15 long as --- it's similar to Palo Verde. We have an air
16 accumulator that would maintain ability to do it from
17 control room for a period of time. After that, the
18 operators ---
19 MEMBER STETKAR: And that period ---
20 MR. WEBSTER: --- would relocate and have
21 to operate it manually in the control ---
22 MEMBER STETKAR: And that period is
23 minutes, hours, days, months?
24 MR. WEBSTER: It's several hours for North
25 Anna.

MEMBER STETKAR: Several hours.

MEMBER SKILLMAN: So, those are really atmospheric dump valves on secondary ---

MR. WEBSTER: That's correct. Power operator relief valve on the secondary, that's what we --- that's just another --- ADVs are what they are.

MEMBER SKILLMAN: Oh, it's a manually operated ADV.

MR. WEBSTER: That's correct.

MEMBER SKILLMAN: Copy that. Thank you.

MR. WEBSTER: Okay.

MEMBER SKILLMAN: And then ECST is the condensate storage tank?

MR. WEBSTER: That's correct.

MEMBER SKILLMAN: Okay, so in deference to 34 hours before you do a switch, it's four hours.

MR. WEBSTER: That's correct.

MEMBER SKILLMAN: So, at that point just to do a comparison, I want to make sure I understand, aux feed would then have a different point of water supply, or you would transition to something other than aux feed?

MR. WEBSTER: So, it's different at each site, so ---

MEMBER SKILLMAN: Sure.

1 MR. WEBSTER: --- at North Anna, because
2 we have the ability to use fire protection, our fire
3 protection, diesel-driven fire pump is located inside
4 of a missile protected building, so we're able to use
5 that to have --- to supply suction to the
6 turbine-driven aux feed pump. If that's not available,
7 then we have portable pumps that we would implement and
8 take suction from either the service water reservoir
9 or the North Anna Lake and use that to refill the
10 emergency condensate storage tank for suction to the
11 turbine-driven aux feed pump.
12 At Surry, we have an additional, we call
13 it another condensate storage tank that we can align
14 and provide additional hours to that makeup until we
15 need to supply it from another source. And at Millstone
16 and --- the two Millstone units you can see at Millstone
17 2 that's 8.4 hours before you do something. At Millstone
18 3 actually the tank is bigger so it's 27 hours.
19 MEMBER SKILLMAN: Okay.
20 MR. WEBSTER: Twenty-two hours, excuse me.
21 MEMBER SKILLMAN: Okay. But the strategy in
22 all cases is to provide water supply to the aux feed
23 to continue its operation.
24 MR. WEBSTER: Initially, yes.
25 MEMBER STETKAR: At Millstone 2 you go down

1 to 125?

2 MR. WEBSTER: Millstone 2 is a different

3 --- is a CE plant that has got --- the SIT tanks are

4 ---

5 MEMBER STETKAR: Okay, thanks.

6 MR. WEBSTER: 120 pounds, so you need to get

7 down lower ---

8 MEMBER STETKAR: That's a cool down.

9 MR. WEBSTER: So, anyway, so these are the

10 Millstone 2 and 3. Again, the decay heat removal, you

11 can see the differences there. The ADVs, we call them

12 ADVs at Millstone, so local manual operation. And at

13 Millstone 3 we actually installed air bottles so that

14 can facilitate doing the operation remotely or at least

15 outside of the highest temperature around where the

16 manual operation would have to take place. That was the

17 modification that we actually did for Millstone 3.

18 In the repowering, you can see that at

19 Millstone 2 we have a lot longer battery life. The way

20 we could load shed those and the batteries are a little

21 bit larger, we were able to get more battery life, takes

22 longer before we have to restore that. Millstone 3 it's

23 about 14 hours. The RCS inventory is about --- is,

24 again, 17 hours for those units, and the spent fuel

25 pool, it's similar to the others, 6 hours to boil, then

1 30 hours for the Millstone 2 case before you reach down
2 to 10-foot above the fuel.
3 So, FLEX is an underground basis strategy.
4 I think you're familiar with the term, we call Phase
5 1 the ability to use equipment and onsite resources.
6 Phase 2 is when we transition to some portable, and in
7 some cases they're pre-staged with some portable
8 equipment to facilitate the function. And then Phase
9 3 is when we bring in the equipment from the National
10 Response Center.
11 So, the first strategy that we looked at
12 was the electrical repowering strategy where we needed
13 to get back the key instruments. In Phase 1, again,
14 we would load shed, and we have a time critical, or a
15 time sensitive action to get that done within a certain
16 amount of time to get that extension. At North Anna,
17 it's about 30 minutes after the ELAP is declared. We
18 have about 30 minutes to get load shedding
19 accomplished, and that would get us 8 hours. Surry is
20 14, Millstone 2 is 29, and Millstone 3 is 14.
21 Phase 2 we're bringing in portable
22 equipment. We have a primary strategy and an alternate
23 strategy as required by NEI-12-06. For the Dominion
24 fleet, we --- our primary strategy was to get back a
25 120 source so we were repowering our vital AC buses

1 directly with a 120 source. And then we have an
2 alternate repowering strategy where we bring in a 480
3 generator that would repower MCVs including the battery
4 chargers, and we would restore instrumentation through
5 repowering the DC bus. In Phase 3 we would be bringing
6 in the 4 kV generator from the National Response Center.
7 Here's just an example of the 120
8 connection. You see it's a 120 generator, and then there
9 would be some connections in the plant to repower the
10 vital AC. In the 480 case, again, a 480 generator
11 sitting outside the building, cables that would run
12 into a connection box. And then that would be --- and
13 this is permanently installed cable to a motor control
14 center that repowers the 480 system.
15 And then the 4 kV connection is from the
16 National Response Center equipment coming in through
17 its distribution panel, and we'd have the --- and then
18 the cables would be into --- would be hooked into one
19 of our 4160 breakers, and that would be a bolted
20 connection inside of a spare breaker.
21 And these are some pictures of the actual
22 --- this picture at the top there is a typical 480
23 connection, and you can see that the connections are
24 for a quick-connect. They're color-coded so that we
25 make sure we get on the right phases, and there's a

1 ground connection. And the blue ones at the bottom are
2 actually the 120 connections that we can deploy the 120
3 machines, so that's just a typical panel.
4 There's another example on the right of one
5 of our units. Again, this is the 480 connections. It's
6 actually --- there's two sets of leads there that would
7 go to two separate ---
8 MEMBER BLEY: Not to be overly picky, but
9 I just noticed recently that my badges here have a
10 little W on them now. They were white. That's to tell
11 somebody who's color blind that there is a white stripe
12 there. Have you considered color blindness? I remember
13 the Navy was finding lots of people coming in are color
14 blind, and I don't know the extent of it. These don't
15 have physical different connectors or feel. It's
16 strictly color?
17 MR. WEBSTER: They are. Now, there are
18 labels on them so ---
19 MEMBER BLEY: Okay. So, if you can read you
20 can hook them up.
21 MR. WEBSTER: Right.
22 MEMBER BLEY: Okay. The same thing with the
23 cables?
24 MR. WEBSTER: As far as labels?
25 MEMBER BLEY: Labels.

MR. WEBSTER: I don't think the cables themselves.

MEMBER BLEY: You might think about it.

MR. WEBSTER: But an analogy, you know, as long as you --- yes, we'd have to --- I'd have to go back ---

(Simultaneous speaking.)

MEMBER STETKAR: Just turn backwards, looking at it, I just blew it up. The little labels do say brown, orange, and yellow in writing.

MEMBER BLEY: That's okay, but that doesn't help you with the other end.

MEMBER STETKAR: No, that's true.

MR. WEBSTER: Right, that's true.

MEMBER BLEY: But it's caused problems in other areas.

MR. AMWAY: I mean, I can at least tell you from, you know, licensed operators, color blindness testing is part of the physical ---

MEMBER BLEY: I did not know that. Is that true?

MR. AMWAY: Yes.

MEMBER BLEY: You have to test not to be color blind.

MR. AMWAY: Yes.

1 MEMBER STETKAR: That's licensed
2 operators.
3 MR. AMWAY: That's licensed operators. That
4 may not extend to the plant operators ---
5 MEMBER BLEY: For the guys out here.
6 MR. AMWAY: --- that may be involved in
7 there, but at least a portion of the plant staff has
8 been validated to not have color blindness.
9 MEMBER BLEY: But maybe not the guys who
10 would be hooking this up.
11 MR. AMWAY: Correct.
12 MEMBER BLEY: You really ought to think
13 seriously about it.
14 MR. AMWAY: We can take that back and think
15 about it.
16 MEMBER BLEY: I mean, if stuff turns
17 backwards mostly that's not a tremendous problem, but
18 it's still not the way you designed it to work. And there
19 are --- at least from my experience in bringing people
20 in through the Navy was in ROTC, my last assignment
21 there, surprisingly a number of people are, in fact,
22 color blind. I don't know if these colors are picked
23 so that they help people who are color blind because
24 some are dark and some are light, and that might work,
25 but it's --- you ought to be sure about that.

1 MEMBER BALLINGER: With older people, you
2 know what Daltonism is? It's a special kind of color
3 blindness in people like me, and it has to do with
4 differentiating between I think red and green.
5 (Simultaneous speaking.)
6 MEMBER BALLINGER: But it happens when you
7 age, among other things.
8 MR. WEBSTER: Yes, that's something we'll
9 take back and think about. I mean, clearly they are
10 labeled here.
11 MEMBER STETKAR: Well, this is more generic
12 than just Dominion.
13 MEMBER BLEY: It's more generic and if the
14 cables aren't labeled that doesn't get you out of the
15 woods. But they might have been designed with that in
16 mind. I mean, those three colors on a gray scale might
17 be significantly enough to distinguish that it's not
18 a problem. I just don't know.
19 MR. WEBSTER: These are some pictures of the
20 generators. Here's the connections at the generator.
21 These cables, obviously, run to the --- those boxes we
22 just showed you. This is a picture of the 120 machine,
23 and this is the 480 machine being moved to its location
24 by its tow vehicle.
25 So, for decay heat removal is the next set

1 of strategies that were developed. Primarily, as we
2 have said turbine-driven aux feed pump supplying steam
3 generators from the emergency condensate storage tank.
4 That's your Phase 1.
5 Phase 2 is the transition from the plant
6 equipment to onsite portable equipment. In some cases,
7 for instance, at North Anna we would go to the fire
8 protection system and get that aligned. At Surry we
9 would go to the alternate tank, and that's a gravity
10 feed. And if those didn't work, then we're using the
11 high-capacity pump that we have stored on site to supply
12 at least 300 gallons a minute suction to the aux
13 feedwater systems on both units at each site. And also
14 it would be for supplying water to the spent fuel pool.
15 We also in accordance with 12-06 have a
16 backup to the aux feedwater pump. In our case, it's a
17 backup diesel-driven pump, and there's a primary
18 connection on the aux feedwater pump header that would
19 inject water directly from this pump. And there's an
20 alternate connection, as well, that's generally in the
21 feedwater or blowdown connections. It's another
22 location for injecting water into the steam generators.
23 MEMBER CORRADINI: And this would be used
24 as a backup to the aux feed on site?
25 MR. WEBSTER: That's correct. Initially

MEMBER CORRADINI: Because it's housed where the generators are and everything else.

MR. WEBSTER: This is housed in the protected storage with the generators and everything else. Right.

Now, this is an example of a connection that we installed. This happens to be emergency condensate storage hose connection where we could use this to backfill and fill the emergency condensate storage tank. We could also use it to move water from this suction connection to the portable aux feedwater pump. Here's, again, is a fill, an aux feedwater connection on one of our units, and you can see these connections are storage connections, so they're standard connections that we use in the industry. Here's another example of an installed connection for aux feedwater pump header.

MEMBER BROWN: Are valves periodically checked for operation? Do they always close?

MEMBER BLEY: The two valves that isolate the connection ---

MEMBER STETKAR: If you go back to the previous slide. There you go.

MEMBER BROWN: Any of the slides with valves

in series.

MEMBER BLEY: Are they periodically operated to insure they haven't bound up in some way, or haven't frozen in place, or they have not whatever?

MR. WEBSTER: Well, obviously ---

MEMBER BLEY: There for 5 or 10 years, and happy.

MR. WEBSTER: Yes, we do have --- they would be in a preventive maintenance program to have them inspected or cycled at some frequency. I don't remember off the top of my head exactly what that is.

MEMBER BROWN: That's why I asked.

MEMBER STETKAR: Do you actually have any tests where you really feed the steam generators with this stuff to make sure that you can do ---

MR. WEBSTER: Well, most of these connections as you can see are relatively simple. They're going into a normal connection, then we --- because of just the sources of water and the potential contamination to the aux feedwater system, we did not actually flow and we're not required to flow actual ---

MEMBER STETKAR: Thank you.

MEMBER BLEY: Not even once when they were installed.

1 MEMBER STETKAR: Not even with a big tank
2 of nice clean water that you can take suction from.
3 MR. WEBSTER: No, we didn't actually flow
4 water into the systems for these new connections.
5 MEMBER BROWN: Or backflow out? Nothing
6 passed through them.
7 MR. WEBSTER: That's correct.
8 MEMBER BLEY: Some of you guys must have
9 been on the startup system units I would assume. If not,
10 things --- I haven't had extensive experience, but I
11 have had a couple --- no, actually, I had several years
12 doing that sort of thing, and there were times when
13 newly installed valves wouldn't work, and sometimes
14 you'd find odd things inside that kept them from
15 working, or something left in between the two, and if
16 you never flowed anything through them either
17 direction, or looked through them, maybe had some kind
18 of inspection, look through and see there's a clear path
19 when they were first installed ---
20 MR. WEBSTER: There was validation or
21 post-modification work that was done. In some cases we
22 did some hydro testing on the system after it was
23 installed, so there was some indication that the paths
24 were clear. We did verify that the paths were clear,
25 weren't blocked, that the valves in a position that they

1 were expected to be. On the ECST valves I'm sure, you
2 know, once they installed it they did verify that water
3 would flow out of them. So, there was post-mod testing
4 that was done to validate that the piping was clear to
5 where it was intended to go.
6 MR. POWELL: I think FME practices back from
7 when we started up the units in the '80s are a lot better
8 today than they were then. We did visuals very similar
9 to what Dominion did. We did not energize systems with
10 the portable generators. We did not move water from the
11 CST using a portable pump. Our challenges were what was
12 the right level of design validation testing. We did
13 have to do pressure testing on some sections of the
14 piping connected to the primary. And we --- including
15 the primary, we didn't hook up the ---
16 MEMBER BLEY: You did enough that you're
17 convinced you had clear paths. And the only way I can
18 think you could do that is either --- hydro doesn't do
19 it, but either flowing something through it, or if you
20 can do a clear visual look through to see that the path
21 is open.
22 MR. POWELL: And then after the systems were
23 connected and welded to the primary you do a visual to
24 make sure there's nothing in the pipe, as well.
25 MEMBER BLEY: Yes, okay.

1 MR. WEBSTER: So, here's a picture of the
2 high-capacity pump being towed down to where it's going
3 to take suction off of; in this case to North Anna Lake.
4 And this is the backup aux feedwater pump, and this is
5 located in an alleyway during the validation process.
6 This is a picture of that pump.
7 MEMBER BLEY: Did this stuff have to be
8 designed or was this off-the-shelf stuff that you could
9 find?
10 MR. WEBSTER: Most of the pumps that we
11 bought were commercial ---
12 MEMBER BLEY: And you kind of hook up some
13 things.
14 MR. WEBSTER: Right. These are standard
15 --- a lot of these are standard fire protection ---
16 MEMBER BLEY: That's what I would have
17 thought, yes.
18 MR. WEBSTER: This is actually a Hale fire
19 protection pump ---
20 MEMBER BLEY: Okay.
21 MR. WEBSTER: --- that we're using for an
22 aux feedwater pump.
23 MR. AMWAY: We tried to stay away from as
24 much as practical having plant-specific designs for
25 this type of equipment.

1 MR. POWELL: There were some cases, like
2 we purchased Cummings diesels for our four diesels, and
3 we had to have the diesels modified for the industry
4 standard connectors.
5 MEMBER BLEY: Okay, sure.
6 MR. WEBSTER: There were some specifics,
7 but most of it we attempted, again, to get commercial
8 grade equipment that was readily available.
9 MEMBER BLEY: Okay.
10 MR. WEBSTER: We have the Phase 3 coming in
11 from the National SAFER Response Center. Again, there's
12 the ability to bring in 4 kV. We can repower equipment,
13 and there's water for purification units that are being
14 brought in. And additional aux feedwater pumps, and
15 both the medium-capacity and high-capacity pumps.
16 So, for RCS injection the analysis told us
17 when reflux boiling would begin, and our target was to
18 begin RCS injection prior to that point. The time
19 depends highly on the amount of seal leakage that we
20 get. For Dominion, we're replacing all our OEM
21 Westinghouse seals with Flowserve Seals so, therefore,
22 we did calculations, you know, with both of these seal
23 leakages in mind, because before we implemented all the
24 Westinghouse seals weren't installed, so we had to do
25 a combination of seal leakages, and compare that to the

1 original analysis that was done.

2 In our case, the 17 hours was the point in

3 time, where if we injected prior to that we would be

4 restoring RCS inventory and verifying that we don't get

5 into the reflux boiling region.

6 Phase 2 we have two RCS injection pumps

7 that we take suction from the refueling water storage

8 tank, is a borated water source. And the units on

9 Millstone 2, we actually have the capability of

10 repowering the charging pump using the 480-volt

11 generator, again taking suction from the refueling

12 water storage tank or boric acid storage tanks for that

13 unit.

14 MEMBER STETKAR: They safety-related pumps

15 on Millstone 2?

16 MR. WEBSTER: Millstone 2, yes, I believe

17 they are safety-related pumps. They are the normal

18 makeup pumps. They're not the SI pumps. They're just

19 normal charging pumps.

20 MEMBER STETKAR: The reason I'm asking

21 safety-related, I want to know what they're seismically

22 qualified for, so that's ---

23 MR. WEBSTER: And all the FLEX components

24 and systems that we credit for, we did the seismic

25 evaluation to verify that two times the SSE they would

survive, so if they weren't safety-related and previously evaluated, they'd be evaluated as far as the FLEX equipment was concerned.

MEMBER STETKAR: Two times current SSE, or two times the evaluated --- reevaluated SSE?

MR. WEBSTER: Current SSE is where we went initially.

MEMBER STETKAR: Thank you.

MR. WEBSTER: This is an example of an RCS connection. Again, it's our standard connection point. This is a suction line that comes from --- eventually from the refueling water storage tank, and this is the pump in the alleyway that would --- this pump actually will inject up to 3,000 pounds at 45-50 gallons a minute.

Containment Cooling Strategy, we did an evaluation, an analysis that indicated that the containment integrity is not challenged in a week, and actually the pressure was never challenged. It was --- the temperature went to the limits of the EQ program. So, again, at least within a week the containment integrity is not challenged, and the integrity itself is never challenged.

Dominion went through an extensive procedure development and similar to Gene's

1 presentation, we developed the FLEX strategy
2 procedures. This is the list of the 15 procedures that
3 we developed that would be implemented from our SBO
4 procedure in this case for the Westinghouse units,
5 ECA-0.0. And that would kick out to each of the FSGs
6 as needed. Any questions on that?
7 This is the beyond design basis storage
8 building at the Dominion sites. It's a missile
9 protected building is where we house the portable
10 equipment, and we have a single building at each site
11 that would house the equipment.
12 CHAIRMAN SCHULTZ: What are the other
13 design requirements for the building in terms of
14 seismic or other design features?
15 MR. WEBSTER: Seismic, it was designed for
16 the design basis seismic event. We did do an evaluation
17 for the new seismic hazards, particularly at North Anna
18 to verify that the building would stay intact. It was
19 more of a margins evaluation, and we verified that would
20 be the case.
21 And ventilation-wise, we just maintained
22 temperatures within --- you know, the equipment is not
23 going to freeze and it's not going --- is some
24 ventilation. So, tornado protection, seismic, and
25 ventilation essentially is what we ---

1 CHAIRMAN SCHULTZ: Thank you.

2 MEMBER SKILLMAN: Bill, is that a concrete
3 dome? Is that what we're looking at?

4 MR. WEBSTER: This is a pretty unique
5 design. It is a concrete dome. The way they build it
6 is there's a --- they set it up and they --- there's
7 a Mylar sheet that they actually --- they build the
8 foundation and then this Mylar sheet, they actually
9 blow up, and then they fill --- they do shock crete and
10 rebar inside it, and that's how they build the dome.
11 So, it's kind of built from the inside. It's about
12 two-foot of concrete and rebar inside, but what you're
13 looking at here is actually the cover that was
14 originally blown up to do the construction.

15 MEMBER SKILLMAN: Thank you.

16 MEMBER CORRADINI: And you said it but just
17 to repeat so I get it right. So, this is tornado, missile
18 protection ---

19 MR. WEBSTER: Right. And this is --- you
20 know, you see the doors are pretty heavy duty, again,
21 for missile protection.

22 MEMBER CORRADINI: So, and then just repeat
23 just to make sure I --- so this already included the
24 reevaluation due to external events to get to this
25 design basis? You explained it to Steve and I didn't

1 completely get it, so I want to make sure I understand
2 it. So, that this is already after you've done the
3 reevaluation relative to seismic, and missiles, et
4 cetera? And that's what went into the design?
5 MR. WEBSTER: Well, it was designed to
6 design basis standard. That's what 12-06 requires us
7 to do.
8 MEMBER CORRADINI: Yes.
9 MR. WEBSTER: And what I said was that ---
10 MR. AMWAY: Existing design basis.
11 MR. WEBSTER: Existing design basis, right.
12 So, it's not the reevaluated hazards.
13 MEMBER CORRADINI: Oh, okay. I
14 misunderstood. I thought you had already finished the
15 reevaluation and it was ---
16 MEMBER RICCARDELLA: They did a ---
17 (Simultaneous speaking.)
18 MEMBER RICCARDELLA: --- to show that it
19 ---
20 MEMBER CORRADINI: For seismic?
21 MEMBER RICCARDELLA: For seismic.
22 MEMBER CORRADINI: Okay. I'll ask him.
23 MEMBER RICCARDELLA: Okay.
24 MR. WEBSTER: This is some of our deployment
25 vehicles. Obviously, this tractor, this is, you know,

1 a front-end loader.

2 MEMBER STETKAR: These guys live inside the

3 dome?

4 MR. WEBSTER: Correct.

5 MEMBER STETKAR: Okay.

6 MR. WEBSTER: And then we also have smaller

7 vehicles for handling smaller type equipment, and

8 tools, and supplies that we needed for the event.

9 MEMBER CORRADINI: What's the volume of

10 this thing that was built?

11 MR. WEBSTER: It's 10,000 square feet.

12 MEMBER CORRADINI: Okay, footprint.

13 MR. WEBSTER: Right.

14 MEMBER CORRADINI: Thank you.

15 MR. WEBSTER: So, for our FLEX Phase 3, Dan

16 is going to do a presentation that's going to be a little

17 more detailed, so I'm just going to go at it from a plant

18 perspective.

19 The National SAFER Response Center, here's

20 the general timeline we're going to be making

21 notifications from the control room. They're going to

22 mobilize the SAFER team in approximately two hours,

23 begin to transport equipment to an offsite area. At 20

24 hours it arrives at that area, and then we're beginning

25 to transport it, and if needed to airlift it to our

1 onsite storage area or staging area, rather, and with
2 the goal of having the first piece of equipment on site
3 in 24 hours.
4 And this is an example of a staging area.
5 Here it's at North Anna, it's a parking area here, and
6 the storage building is located up here. So, this is
7 where we would --- helicopters would land on our site,
8 and then deploy down to the plant. Again, this area and
9 the haul routes down to the plant have been evaluated
10 to make sure that they would be --- they would survive
11 after the event, flooding. Obviously, we would be able
12 to use that debris removal equipment from the storage
13 area and clear any debris prior to 24 hours before the
14 equipment actually arrives on site.
15 The sites did a response plan. It's a
16 documented plan that we have at each of our sites, and
17 the control room staff, and the ERO staff has a copy
18 of this that talks about the --- just a step by step
19 procedure on how we respond to the SAFER Response Team,
20 and the logistics of their teams.
21 MEMBER STETKAR: Bill, I just --- you train
22 your operators on how to use front-end loaders and ---
23 MR. WEBSTER: We'd actually had some
24 training. And I'll go over training specifically here
25 in a minute, but yes ---

1 MEMBER STETKAR: The reason I ask, because
2 I went to a site once where they had a fire truck and
3 nobody --- people forgot to train the operators on how
4 to use the fire truck.
5 MR. WEBSTER: Actually, that's ---
6 MEMBER STETKAR: I understand how to drive
7 a golf cart, but front-end loaders are a little
8 different.
9 MEMBER SKILLMAN: Would you go back a slide,
10 please? The logistics in transportation, would you talk
11 a little bit about that? Here's why I ask. Say, North
12 Anna, it's relatively rural. We've got plants down on
13 the ocean that are actually moated. You've actually got
14 to cross a bridge to get to them. Some plants have
15 close-in interstates, other plants don't. So, for the
16 plants that you're talking about please speak a little
17 bit about the logistics, how you've solved the riddle
18 of big equipment, tractor trailers, remote area,
19 crossing bridges, getting to your site within 24 hours.
20 And I would guess Memphis is a starting place for you.
21 MR. WEBSTER: Right, so --- and I think Dan
22 is going to speak to a little more detail when he gets
23 here. But generally speaking, what we all assumed was
24 that areas outside the plant approximately 25 miles was
25 inaccessible, so we would have to --- we would not

1 --- you know, that's one of the things we looked at.
2 And as we get into the response, you know, we will be
3 notifying our local states and the Department --- you
4 know, the Transportation Departments would be
5 involved, and they would actually access areas to the
6 site. And at some point in time they would determine
7 it's inaccessible, you need to airlift equipment in.
8 So, we all had planned on having a local airport or
9 generally it's a local airport that's within the 25 to
10 35-mile range of the site so that we can have the
11 equipment brought to that area. And all the equipment
12 was designed to be airliftable, less than 8,000 pounds.
13 And we would be airlifting it from that site --- from
14 that location to the site. So, when I was pointing out
15 this area here, that's where the helicopter would land
16 the equipment and we would move it to the site. Now,
17 if the bridges were passable, clearly, they would drive
18 it in, and we wouldn't use that. But that's how we
19 designed the plan.
20 MR. POWELL: And either National Response
21 Center can --- either can support any plant in the U.S.
22 They're 100 percent redundant to each other, so if
23 Memphis was unavailable, they would go to the Phoenix
24 Center to ship the equipment.
25 MR. WEBSTER: So, they would fly it into an

1 airport that could support larger airline. They would
2 get it to this local airport for helicopter transport,
3 and then the helicopters would take it to ---
4 MEMBER STETKAR: Do you contract separately
5 with that helicopter transport from that local airport,
6 or is that part of the network?
7 MR. WEBSTER: Again, I think Dan is going
8 to talk a little bit about that, but ---
9 MEMBER STETKAR: Okay.
10 MR. POWELL: John, I can address it.
11 MEMBER STETKAR: We'll hold it.
12 (Simultaneous speaking.)
13 MR. BAUER: The other thing is when the
14 SAFER Team came to the site and worked with them to
15 develop this document you're looking at, they actually
16 traveled the alternate routes to the site to look at
17 and identify what would be the primary route to drive
18 the equipment in, if you could. So, they would do an
19 assessment of --- as the stuff was being shipped from
20 the National SAFER Response Center to the staging area,
21 they would already be planning well, which routes are
22 available into the site.
23 MR. WEBSTER: So, for the sites that we had
24 a single point of contact that would be communicating
25 with the SAFER TEAM, and then we implement our emergency

1 plan through our emergency facilities, contact state
2 and local, contact federal. And this is --- and through
3 the state, and local, and federal you'll see that's
4 where we also get some helicopter support, if needed.
5 For the National SAFER Response equipment
6 for Dominion, we're getting 4 kV generators, 480
7 generators, high and low-pressure pumps, the backup aux
8 feedwater pump, mobile boration units, water
9 treatment, submersibles, portable air compressors, and
10 some suction booster pumps, high flow pumps.
11 So, as part of the response we had to
12 develop the programmatic elements for things like
13 quality attributes, equipment design storage,
14 procedure guidance, maintenance and testing, training,
15 staffing, configuration control, so I'm going to talk
16 a little bit about some of the program elements that
17 we established.
18 So, this is basically just, you know,
19 talking about --- we had the engineering technical
20 evaluation which is part of what I had talked about
21 originally, all the analysis and things that were done,
22 the documentation of the strategies, why they work, how
23 they work. So, that was all part of a body of engineering
24 work. We developed programmatic --- a program,
25 procedures, program documents that would point to these

1 technical evaluations for justifications. We
2 established configuration management so that these
3 FLEX strategies would be maintained. If there was some
4 design change, or some procedure change occurred, there
5 was feedback to verify that the original strategy
6 wasn't affected. And then how to deal with procedures,
7 including how to get the guidelines approved
8 originally, and how to maintain them. And, again, the
9 training.
10 This is in --- the summary of this is what
11 we're going to respond back to the NRC in a final
12 integrated plan, and then from this information, the
13 safety evaluation would be developed.
14 Program interface, at Dominion sites we're
15 going to have a corporate program monitor, and there's
16 going to be a station program monitor. And then these
17 other things are the number of departments that are
18 being touched by this program including the Operations
19 Department. Obviously, the Maintenance Department
20 that's going to be responsible for maintaining the
21 equipment, you know, outage and planning, there's some
22 aspect of this during Modes 5 and 6 that they're
23 involved with. The Air Site Services with their vehicle
24 maintenance program, they have an element for
25 maintaining the equipment. Design engineering and

1 licensing from the station. There's also the emergency
2 planning group, training, supply chain, security. Then
3 the Owners Group is involved, so there's a lot of
4 interface, program interface between all these various
5 groups that are being affected by and implemented
6 through this program.
7 So, communications is one of the important
8 things that was considered during the development of
9 this program. So, for Dominion our offsite
10 communication strategy was originally between zero and
11 one hours that we would be using satellite phones to
12 contact outside response agencies and the NRC. We
13 deploy within one to three hours an additional --- it's
14 a portable satellite antenna that would allow us to use
15 desk phones from the control room rather than an
16 operator having to go outside to make that
17 communication.
18 At about six hours, we have a
19 communications trailer that would be deployed that
20 would include the ability to restore repeaters and some
21 radios for communication onsite, and then the offsite
22 teams as they arrive on site.
23 MEMBER SKILLMAN: For those first two
24 bullets, is that equipment in use now?
25 MR. WEBSTER: We do have satellite phones.

1 We bought special satellite phones, additional ones for
2 this response specifically, so the answer is some of
3 these are. The ComLabs Rapid Response equipment was
4 bought specifically for this.
5 MEMBER SKILLMAN: Okay, thank you.
6 MR. WEBSTER: Initially, some of the
7 communication is going to be through existing
8 sound-powered phones. We also --- actually, we ordered
9 and have installed more sound-powered phones, but
10 that's going to be used. And then we have 450 megahertz
11 radios from a point-to-point that you can communicate
12 point-to-point. And the repeater that's coming later
13 would be --- would facilitate more use of the radios.
14 But, initially, the operators can either be
15 face-to-face or use the sound-powered phones in the
16 areas that are set up, like the aux feedwater pump house
17 and areas like that.
18 MEMBER BLEY: You're already wired for
19 sound-powered phones?
20 MR. WEBSTER: Yes, already wired for
21 sound-powered phones.
22 MEMBER BROWN: Are all plants wired for
23 sound-powered phones?
24 MEMBER BLEY: I do not think so. Are they?
25 MR. WEBSTER: Not all.

1 MR. AMWAY: I could tell you in my
2 particular instance for Nine Mile Point we are, and
3 we ---
4 MEMBER BLEY: A lot of the older ones were.
5 MR. AMWAY: Very similar strategy in terms
6 of point-to-point radio coms, and sound-powered
7 phones. It's almost identical, including the satellite
8 ComLabs is what we're using, as well.
9 MEMBER BLEY: Okay. I kind of like that they
10 do. I mean, they're pretty reliable.
11 MR. AMWAY: Yes.
12 MEMBER STETKAR: I suspect the new ones may
13 not be.
14 MEMBER BLEY: May not be wired. I know I've
15 seen pads that are not, so ---
16 MR. WEBSTER: So, these are some pictures
17 of the --- again, this will be stored in the TSC area.
18 And this can be rolled outside and they bring the cables
19 and hook it up inside. And, again, it keeps the operator
20 in the control room where he needs to be rather than
21 having to communicate from outside the control room.
22 And once this satellite antenna is positioned, then it
23 gives him more capability for satellite and for radios.
24 MEMBER BLEY: I'm sorry to ask, for those
25 of you who do have sound-powered phones, do you use

them, are people used to communicating on them at all? Do you exercise it once in a while?

MR. AMWAY: We actually do, and ours is the --- I mean, because it has both a powered and non-powered mode.

MEMBER BLEY: Oh, okay.

MR. AMWAY: And we have a patch panel that's located right below the control room, and we've used it, you know, to communicate between the control room and the under vessel area during outages, so it is used.

MEMBER BLEY: Okay. The reason I asked, it takes some getting used to to be able to understand anything on the other end.

MR. WEBSTER: Right. And Dominion, at some of our sites we actually have an operator procedure to go and verify that they still work.

MEMBER BLEY: Yes, but my point is if you don't listen to them and practice, you don't hear anything but garbababababa. The frequency response is pretty meager.

MR. WEBSTER: Okay. So, I'm going to talk a little bit about training. So, for all our training we use the systematic approach of training process, various disciplines were trained. There was a phased approach. In our case, since we were implementing

1 --- the way our fleet --- North Anna has actually
2 implemented on one of their units, we had to do some
3 of the training even prior to some of our equipment
4 arriving on site, so we had to use a phased approach
5 to get as much training as we could done when we needed
6 it. Then had to do a gap analysis and follow-on training
7 after that, so it was a phased approach for us,
8 primarily because of early implementation. Anyway, so
9 we'll talk a little bit about that. And then we did
10 multiple discipline training for all the required
11 disciplines that needed to implement strategies.
12 So, analysis that we did was based on,
13 obviously, the orders, what's contained in NEI-12-06.
14 There was an IER-13-10 that came out from INPO, that
15 had some training on it. Those were considered. Design
16 changes and engineering technical evaluation affected
17 the training. Owners Group, you know, changes in the
18 Owners Group, the new FLEX guideline procedure.
19 Obviously, you had to do job task analysis to make sure
20 that the right amount of training was done. And then
21 training on the new portable equipment that wasn't
22 --- that the operators and people that are using
23 weren't accustomed to.
24 So, the disciplines we trained, operators
25 were trained. In our case, some of the security staff

1 is going to be used particularly for debris removal,
2 so they had to get training on their roles. Maintenance
3 staff we're training --- were trained, emergency
4 response organization, and other disciplines including
5 the station leadership teams.
6 So, again we used a phased approach as the
7 design changes came out. There was overview training
8 that was developed. Part of that used some of the NANTeL
9 information coming out of INPO, but we had an overview,
10 including site-specific overview training that was
11 provided to many disciplines. Most everybody got this
12 overview training. And then there was more specific
13 training on the FSGs and FLEX equipment for the
14 operators and the ERO organization.
15 So, we analyzed the common training
16 modules from INPO, as I said. Job task analysis for the
17 Operations, and that was part of their initial and
18 continuing training. And we had to do delta training
19 primarily because of early implementation, some of the
20 equipment and procedures were in development and we had
21 to do training. And then we had to follow-on after we
22 got the training feedback to effect the FSGs, and when
23 they were finally approved. And all of that was
24 successful, fully implemented in North Anna back last
25 month.

1 MEMBER SKILLMAN: Bill, go back to your
2 Slide 54, please. What special training is given to
3 security?
4 MR. WEBSTER: Well, in this --- in our case,
5 we are actually using the training staff to remove
6 debris.
7 MR. AMWAY: Security staff.
8 MR. WEBSTER: I'm sorry, the security staff
9 to remove debris, so we actually had set up, you know,
10 where they would come over, at least a certain number
11 of the security people that were going to be training
12 for it. We have security as part of our fire brigade
13 at our site, so generally it was those people that was
14 also involved. The fire brigade would get this
15 training. And I forget exactly the number of security
16 personnel that were trained, but there was a number that
17 we would have, I'm sure that we have three or four per
18 shift that would be available. And we actually had them
19 trained on debris removal equipment that we had. We
20 actually moved piles around so they were comfortable
21 with the operation of it, how to drive it, you know,
22 what to do with it.
23 MEMBER SKILLMAN: So, security is actually
24 operating that equipment?
25 MR. WEBSTER: That's correct.

1 MEMBER SKILLMAN: Then who's on watch?

2 MR. WEBSTER: Well, in --- most of the time
3 from minimum staffing to admin staffing, there's
4 generally more security people. After this event, you
5 know, in beyond design basis, the security posture
6 might be different than, you know, initially, so that
7 was considered. So, it was considered in our staffing
8 analysis how many security personnel would be available
9 to do it and maintain security requirements.

10 MEMBER SKILLMAN: It was --- I mean,
11 obviously, we can't delve into details here, but that
12 is a real concern because others have talked about
13 opening doors that would normally be security doors,
14 and you need to post people there. You can think about
15 damage to perimeter fences, and things like that that
16 people would need to monitor.

17 MR. WEBSTER: One of the things going into
18 this work, we did not consider that we had a concurrent
19 security event going on. So, in other words, we wouldn't
20 consider --- there was different parts of the security
21 parts that we --- not to get into a lot of detail there,
22 but ---

23 MEMBER STETKAR: You don't. But, I mean,
24 there could be breaches like trees falling down on your
25 security fences ---

1 MR. WEBSTER: Exactly.

2 MEMBER STETKAR: --- and things that will

3 require ---

4 MR. WEBSTER: Right.

5 MEMBER STETKAR: --- a watch, or at least

6 possibly conflicting priorities. And that's ---

7 MR. WEBSTER: As Mike indicated, or Gene in

8 the response, you know, we may have to enter 50.54(x)

9 and deviate and adjust to the condition on the site.

10 The primary concern ---

11 MEMBER STETKAR: But certainly among the

12 security staff, it certainly could introduce priority

13 conflicts. You know, do I go jump in the front end

14 loader, or do I go check the fence that's down?

15 MR. POWELL: You do transition through

16 different levels of your security plan, and I've got

17 to be careful here what we say.

18 MEMBER STETKAR: No, that's ---

19 MR. POWELL: But that's why Gene made the

20 tie from 55.73(p) to 50.54(x). And, you know, if you

21 ---

22 MEMBER STETKAR: But, I mean, he was talking

23 it in the sense of opening doors and things.

24 MR. POWELL: Yes.

25 MEMBER STETKAR: We're now talking about

1 taking those people and having them do non-security
2 functions, debris removal, firefighting, that sort of
3 thing.
4 MEMBER SKILLMAN: I was going in that
5 direction, but I just want to take a minute and make
6 a comment, then you can understand where I'm coming
7 from. I was the emergency support director at TMI when
8 the man got in the plant. We had over 150 Pennsylvania
9 State Police on the site of TMI. We had a major fraction
10 of those in the protected area. All of them were armed.
11 Our security wasn't sure what to do. And I will simply
12 say that when you get into a situation that begins to
13 have its own dynamics, it's easy to lose sight of what
14 the barriers are that you're supposed to protect.
15 If security people are being told to drive
16 front loaders, and the tree goes on the fence, who's
17 on watch? It seems to me that this is an area that really
18 needs very delicate handling, because it's easy to lose
19 sight of the goal. Security has a particular function,
20 and security can really be put to the test as the event
21 begins to unravel. That's as much as I'm going to say.
22 MR. WEBSTER: I'll tell you this, generally
23 speaking, you know, we have enough additional security
24 staff to --- as far as the minimum staffing is concerned
25 to be able to support, but I understand the comment.

1 MEMBER SKILLMAN: Thank you.

2 MR. WEBSTER: Okay. So, anyway, so the
3 Operations personnel, they did job task analysis. They
4 identified eight new tasks that they were trained on.
5 They received the overview training, and then they
6 received specific FLEX strategy guidelines, and the BDB
7 equipment training, so operators as well as the
8 security people understand how to use the equipment.

9 Engineering, the internal population they
10 got continued training, they got the overview training.
11 Those members of the emergency response organization
12 got additional training from the engineering
13 organization. And then we just talked about the
14 security personnel.

15 We did leadership training from
16 --- through SOER-10-2, and then there's a new INPO
17 course for decision makers, and the leadership will
18 --- that'll be included in our leadership training, as
19 well.

20 ERO training, we did training on the
21 specific failure modes for the operators, the shift
22 technical advisors, and the engineering technical
23 staff on what modes particular valves can fail in during
24 this event. That's more or less for to understand how
25 the FLEX --- you know, what makes the FLEX successful,

1 and potentially how to do any troubleshooting that
2 might be needed.
3 They did BDB FLEX training. They had
4 specific training for each position, and then there's
5 two INPO courses, a basic ERO training module that came
6 out for general staff, and there was advanced training.
7 And these courses were assigned to members of the ERO
8 staff.
9 The next thing I'm going to talk about is
10 validation. The validation process was going to just
11 give us the confidence that the FLEX strategy
12 procedures worked, that the time sensitive actions
13 could be performed in the right amount of time with the
14 adequate margin.
15 NEI developed the guideline, and Dominion
16 used that guideline in their validation process. The
17 guideline talks about a graded approach, Level A, B,
18 and C. A is those actions that would be started within
19 the first six hours, and they would be using the minimum
20 staffing on site primarily to use relatively short time
21 frame, minimum staffing would require more rigorous
22 validation than validation after that time in 6 to 24
23 hours when additional augmented staff can arrive on
24 site, and you have more time to accomplish the action.
25 Level C was those actions that require some

1 amount of manual actions that are labor-intensive, but
2 they don't generally have a specific time or their time
3 is in the days after the event where things can be
4 accomplished easily.
5 So, we considered in the validation
6 process for each of the actions that were validated what
7 equipment was required, the complexity of the event,
8 how complex are the actions, are they simple actions
9 or they require some complexity, what cues and
10 indications that would either tell the operators that
11 I need this function. Then if the function is
12 successful, an example of that would be the control room
13 indications or the local tank indicator that say I need
14 water. Then when we validate it, we would indicate how
15 would we know we're successful. You know, what cues did
16 we have on station from the control room or locally that
17 would tell us that we were successful?
18 There are special fitness issues that were
19 considered like if something was heavy, how many
20 operators would it take to move this piece of equipment
21 around? Environmental factors, all the five hazards,
22 seismic, flooding, high winds, temperatures, cold
23 temperatures, hot temperatures, those factors, how it
24 affected the implementation, and those things were
25 considered during the validation.

1 Communication, am I communicating
2 face-to-face, I'm on a sound-powered phone, or do I got
3 a radio was considered in the validation, and then any
4 other special considerations.
5 MEMBER BLEY: Bill?
6 MR. WEBSTER: Yes.
7 MEMBER BLEY: Let me think how to ask this
8 question. When --- in the previous talk we had a point
9 that was all focused on extended loss of offsite power
10 and dealing with that.
11 MR. WEBSTER: AC power.
12 MEMBER BLEY: I'm sorry, AC power. I asked
13 if people were going to have, or were going to update
14 their SAMGs to account for this new equipment. And then
15 in your talk they seem to be almost mixing, and I hadn't
16 noticed until somebody just pointed out to me your logo
17 up there is the Beyond Design Basis Project, so you're
18 really looking at everything kind of at one time, or
19 are you at this point just making sure all this stuff
20 works for extended loss of power, but you're getting
21 in your hip pocket what you need to do to look at things
22 beyond the design basis?
23 MR. WEBSTER: Well, when we say beyond
24 design basis, we're really referring to this whole
25 mitigation strategy order. I mean, it's not --- so,

1 that's what we mean by that. We will eventually use
2 --- these strategies are specifically designed for
3 EA-12-049 mitigating strategies order.
4 MEMBER BLEY: Okay.
5 MR. WEBSTER: And we will eventually get
6 into where these strategies will be used, you know, and
7 developing of our SAMGs that'll be considered for that.
8 And then there's some more talk later even about, you
9 know, reevaluating hazards and things like that. But,
10 generally speaking ---
11 MEMBER BLEY: But you haven't made up your
12 mind that these will cover you for those beyond design
13 basis --- other design basis events at this point in
14 time?
15 MR. WEBSTER: Not completely. I mean, we've
16 got ideas where we would go, but not --- we haven't done
17 --- we don't have the information to do another
18 evaluation to say that.
19 MEMBER BLEY: Okay.
20 MR. AMWAY: The way to look at it, I mean,
21 it's more tools in the toolbox. You know, I execute my
22 ELAP strategies, I have all this portable equipment I
23 can use. It's designed for that particular purpose. If
24 I get in my SAMGs they're still there. There's nothing
25 --- I'm not going to put something in there that says

1 this is only for the ELAP. You can't use it ---
2 MEMBER BLEY: It's designed for what
3 purpose? That's the question.
4 MR. AMWAY: Well, designed for responding
5 to the ELAP as defined in Order 49.
6 MEMBER RAY: Well, yes. And it just --- and
7 it says --- it begins to sound like we're talking about
8 everything that we're going to do for beyond design
9 basis, when we thought we were talking about extended
10 loss of AC power. I mean, if you just look at the slides
11 and listen to what you're saying, there isn't any
12 definitive statement about well, this is what we're
13 going to do for extended loss of AC power, and it's
14 available as we address ourselves to beyond design
15 basis events. That's not the way it comes across.
16 MR. BAUER: Well, we put together the
17 validation document as a way to validate the FLEX
18 strategies for the ELAP condition.
19 MEMBER RAY: Okay.
20 MR. BAUER: So, this is what we said we need
21 to go do to basically show once we get these designed
22 installations in place that we could actually meet the
23 time frames of deploying that. So, that's what he's
24 talking about here, is the validation process we put
25 in place to validate that so the plants could go live

1 and say I'm implemented.

2 MEMBER RAY: But there's a lot of discussion

3 about other stuff than extended loss of AC power.

4 MR. BAUER: Right. And we may very well take

5 and use the same validation process for other

6 mitigating strategies for reevaluated hazards at some

7 point in the future when we ---

8 MEMBER RAY: Okay. Well, that makes it

9 clear, but I'm just pointing out it's not clear if you

10 just listen to what's being presented. You'd think we

11 were talking about everything, I would claim. Just

12 start with the logo up on the top corner there.

13 CHAIRMAN SCHULTZ: Well, you have to give

14 some consideration to what got you to the extended loss

15 of offsite power.

16 MEMBER RAY: Well, that's another

17 discussion. I don't want to get off on that ---

18 CHAIRMAN SCHULTZ: Right.

19 MEMBER RAY: --- sidetrack, Steve. But as

20 long as we know we're talking about extended loss of

21 AC power, fine, no problem.

22 MR. BAUER: I think the point that Steve

23 makes is very good, because one of the things, you know,

24 the FLEX strategies were very consequence-based. We

25 basically said what is the outcome of a beyond design

1 basis external event, and it is an extended loss of AC
2 power with loss of the ultimate heat sync. So, that was
3 the initial conditions we had. We had no specified event
4 that caused that. You know, it could have been seismic,
5 could have been flooding, it could have been tornado,
6 whatever, so we didn't specify what that is. When we
7 actually get reevaluated flooding results, we may go
8 back and say well, now I know the conditions, so now
9 can my mitigating strategies still work under those
10 conditions, or do I have to modify them, or can I modify
11 them to make them work, or do I need to come up with
12 a different mitigating strategy? So, that's C-the next
13 step in this is after we ---
14 MEMBER RAY: But just to reiterate, it's not
15 that clear that we're talking just about the first step
16 here, and you're making it clear now, so that's fine.
17 MR. BAUER: Yes. So, this is only what we
18 put together for FLEX. It's an appendix in Rev 1 of 12-06
19 to say how we would do the validation of FLEX right now.
20 We may morph it to encompass more stuff as we go down
21 the road.
22 MEMBER BLEY: I come to back to where I --- I
23 was asking it more as a question, but I think it's good
24 that if you're putting in thinking of, but if we just
25 design to something fixed and then next year we find

1 out that it isn't going to work at all, that would not
2 be very good. So, I'm glad that there is some more
3 attention ---
4 MR. WEBSTER: Yes. Even in the mention that
5 we did with the seismic evaluation, and we did consider,
6 you know, that beyond design basis, and making sure in
7 your margins analysis that what we were putting in will
8 still survive that. You know, obviously, we put our
9 buildings in places on site, you know, we would put it
10 in the highest possible place so any flooding,
11 additional flooding --- I mean, so there were
12 considerations when we made these strategies for, you
13 know, built in margin. We tried to build in margin. Now,
14 in some places that's not possible, but in places where
15 it could be, that's what we did.
16 MEMBER RAY: That's great and appropriate.
17 I just want to be clear what we're reviewing here now
18 doesn't extend to these other things that are
19 mentioned.
20 MR. BAUER: That's correct. It's just FLEX
21 we're talking about here.
22 MEMBER STETKAR: As an example, if you go
23 up --- well, you haven't gotten it yet, your Slide 67
24 where you actually show the hook-ups. It doesn't look
25 like you're next to a seismically qualified building

1 there, for example, so it's not at all clear in a very
2 big earthquake that you could make the hook-up from that
3 position. Location, for example. That building on the
4 left doesn't look like it's a robust building.
5 MEMBER RAY: But it isn't our intent to get
6 into that discussion, or reach any conclusions now.
7 MEMBER STETKAR: Yes, okay. Right.
8 MR. WEBSTER: I mean, so if something were
9 to happen --- what we did was we did --- in all our
10 strategies we would look at that. So, we would --- we
11 may not be able to park it exactly there. We may have
12 to remove some debris and have it park further out in
13 the alleyway and then bring the cables in. So, we know
14 that after the event there's going to be some amount
15 of work that may have to get done to implement it.
16 Now, what we did do is where these cables
17 run to inside that building, that building is, you know,
18 generally a safety-related --- or at least one of the
19 alternates would be a safety-related structure that you
20 would expect to survive and wouldn't expect to have that
21 stuff. So, we kind of took that in consideration when
22 we designed the strategies to be flexible enough to be
23 able to either remove the debris, or relocate the
24 equipment and run the cables a little bit longer.
25 MEMBER STETKAR: Thanks.

1 MR. WEBSTER: Okay. So, we talked about the
2 time sensitive actions, and Gene had given a pretty good
3 timeline. And for Dominion, this is North Anna
4 specifically, you know, just similar actions. You can
5 see that we're realigning aux feedwater in a specified
6 time, prior to 50 minutes when we get dry out or overfill
7 of one of our generators, and that's a time that was
8 validated. We have to declare the ELAP event in 60
9 minutes. That was validated on a simulator that all the
10 Ops teams would be successful or would follow the
11 procedure and implement prior to 60 minutes. We talked
12 about load stripping that had to occur within 30 minutes
13 to make sure that we had at least 8 hours of battery
14 life. We talked about having to --- prior to 4.2 hours
15 where the ECST was empty, we had to implement some aux
16 feedwater resupply, and in this case that's the
17 diesel-driven fire pump, they're talking about
18 starting that. And we do also have some service water
19 that can gravity drain to give additional time, as well,
20 for that strategy. And then we wanted to make sure that
21 we had our instrumentation repowered within --- prior
22 to the batteries depleting to maintain the
23 instrumentation within the control room.
24 So, this is how we selected which things
25 needed to be validated through a timeline very much like

1 this. So, this is the timeline for the first several
2 hours. All these would be clearly the Type A or Category
3 A validation times because they're less than six hours.
4 So, this is just some of the pictures from their
5 validation, and we actually, you know, again, put hoses
6 into the lake, and there's a strainer there, and there's
7 the pumps. And we actually ran through the whole
8 evolution in a stepwise fashion to make sure that the
9 activities would be done in the right amount of time,
10 and that the connections and equipment actually fit,
11 and would be able to be hooked up.
12 MEMBER BLEY: Did you go to those kind of
13 self-cleaning strainers like the firemen use in case
14 you pick up a bunch of junk, so you can flush it out
15 easily?
16 MR. WEBSTER: Well, we do have several types
17 of strainers that we have. I'm not exactly sure what
18 you're talking about, but we do have strainers that can
19 be cleaned in our system.
20 MEMBER BLEY: Okay. Well, I was talking
21 about the kind that you only interrupt for just a second
22 and you're dumping the stuff right back out. You know,
23 flushes it, changes the flow path through it so it
24 flushes the gunk out on the ground, and then you throw
25 it right back where you're going, because you can pick

1 up anything out of that.

2 MR. WEBSTER: Right. Yes, but this is

3 --- obviously, the strainer here is just to keep the

4 big stuff out. There are inline strainers, and I have

5 to go back and look. I believe that they are --- they

6 do have the ability to be flushed, so I don't know if

7 those are exactly the ones you're referring to, but they

8 do have the ability to ---

9 MEMBER BLEY: You don't have to tear

10 everything apart to get them.

11 MR. WEBSTER: Right. No.

12 MEMBER BLEY: Okay.

13 MR. WEBSTER: This is just a part of the

14 validation, example of the DC load stripping, and we

15 had a success criteria. We wanted to make sure we would

16 get it done within 25 minutes, and all the operators'

17 teams, you know, they were at --- we just validated that

18 we would be successful with some amount of margin. And

19 really for all these validation examples, you know,

20 margin is the key. I mean, we want to make sure that

21 because there is some amount of uncertainty, as you

22 spoke about, as far as how much debris is going to be

23 in the way, so all these strategies we wanted to make

24 sure we had adequate margin that we would be successful

25 even under adverse environmental conditions. Because

clearly when we did our validation, you know, we didn't do it at night, we didn't do it in the rain, you know, so we had to make sure that we had plenty of margin, and that they would be successful.

Here's just the guys in the field doing some of the validation work that we'd already looked at. And that's the end of my presentation.

CHAIRMAN SCHULTZ: Thank you, Bill. Questions from the Committee for Bill before we move on to the next presentation?

MEMBER BLEY: Just a comment from me. I know you have to have some ground rule for doing this work. The ground rule that nothing else is going on and it's just the power went away gives you a place to start from. But it's really unlikely the power is just going to go away unless something else really significant is going on. You know, you're not going to have all the offsite power and all your onsite power fail randomly.

MEMBER STETKAR: Cleanly.

MEMBER BLEY: Cleanly, so it's just --- it's a little worrisome that that was the criteria. I think what you've got probably works well in lots of other cases, but it's just not the most likely way you're going to see --- you know, we don't expect to ever see that. If we see it, there's something strange

1 going to be going on, like in Japan we had a big
2 earthquake and tsunami. Now, something is going to link
3 all these things together and take out our redundancy.
4 MEMBER CORRADINI: I guess I'd ask Dennis'
5 question differently. Given the assumptions of the
6 analysis, what are some of the extraneous things that
7 are covered by the assumptions? In other words ---
8 MEMBER BLEY: I'll give an example then.
9 MEMBER CORRADINI: You know what I'm
10 asking? In other words, I would do ---
11 (Simultaneous speaking.)
12 MEMBER BLEY: Given you designed it to these
13 rules, how confident are you they can survive under
14 other ---
15 MEMBER BALLINGER: That was the root of my
16 question about the box off to the right in the Palo Verde
17 presentation where now you're --- I forget what the
18 title was of the box. Functional Recovery, where
19 something else is happening at the same time.
20 MEMBER RAY: Look, I know Mike wants to ask
21 a question, but this --- like Scott said, this is just
22 the first step. You've got to take one step maybe before
23 you take the second step. I agree completely with ---
24 MEMBER BLEY: Costs a lot of money though.
25 MEMBER RAY: I agree completely with

1 Dennis' point. I think we're getting into a debate that
2 many people have had already about whether it should
3 be two steps or one big leap.
4 MEMBER CORRADINI: Well, no, I wasn't even
5 --- I guess I wasn't going there. I was saying I
6 understand that they're stepping through a logical
7 sequence. That I understand and I accept. I'm asking
8 in developing the first step, somebody must have done
9 an analysis that said what are the encompassed
10 extraneous things does that first set of assumptionsC-
11 MEMBER RAY: That's not my impression. I
12 think it's a challenging job just to deal with what
13 we're dealing with here, which is the extended loss of
14 all AC power. Now, the next step, which is well, what
15 simultaneous or causative factors might we now also be
16 able to deal with using this step, is the second step,
17 like Scott said. And I would expect that the answer
18 would be well, something, but not everything. But, you
19 know, I think we're --- it is a recognized limitation
20 of what we're doing now. That's why I asked the question
21 earlier, are we really limiting ourselves, or are we
22 trying to go further? But I think we're limiting
23 ourselves right now just to the question, what does it
24 take to deal with an extended loss of all AC power? And
25 are we confident that we can do that reliably, but

1 that's not the end of the road by any means.

2 MR. WEBSTER: I would say, you know, and

3 even when we built this thing, there's a primary and

4 an alternate way of doing the strategies. I mean, there

5 is some redundancy, or things that we built into it in

6 case some of the unforeseen things would or might occur.

7 Another example would be we do --- even though it's not,

8 you know --- we talk about the batteries. We do have

9 alternate ways of getting indications that we --- and

10 we have, you know, what exactly do we have to go monitor

11 to get that indication. So, if the DC failed, for

12 example, we would have something in place that the

13 operators could use to instruct somebody to go get an

14 instrument reading locally, or from the containment

15 ---

16 MEMBER RAY: But at the end of the day we

17 are going to look at flooding, for example. So, it might

18 well be that what you've done could have been done

19 differently in a way that would be better for flooding,

20 but that's the path we're on ---

21 MR. WEBSTER: We may have to modify it in

22 order to encompass ---

23 MEMBER RAY: The path we're on doesn't take

24 that into account, and that's the reality.

25 MR. BAUER: So, clearly up front we said,

1 you know, it's important to the industry that we
2 implement mitigating strategies, so we can wait for the
3 reevaluations to happen and do that, and still be
4 waiting, or we could go ahead and put something in place
5 that gives us a flexible and diverse capability to deal
6 with an out of the normal event that has got some
7 flexibility to it. I know we highly stylized it to ELAP
8 and loss of ultimate heat sync, but it really gives us
9 tools to deal with probably a variety of things that
10 could happen because, you know, the chance of that exact
11 event happening is probably zero. I mean, so something
12 like it, or some subset of it could be there, but it
13 gives us the ability to put power in place, to put water
14 in to cool the core. You know, it gives us a lot of
15 capabilities that we now could use to --- now we have
16 to go back and now we're going to get the reevaluations.
17 We did it somewhat with the ESEP for seismic. We
18 basically went back and looked at the ---
19 MEMBER STETKAR: ESEP is?
20 MR. WEBSTER: Expedited Seismic Evaluation
21 ---
22 MEMBER STETKAR: Okay, thanks.
23 MR. BAUER: So, we basically looked at the
24 GMRS results and said hey, what can we use from that
25 to basically give us a greater seismic capability? So,

we went back to those plants that I screened in, and we looked at the stuff that is needed for FLEX to work, and we said let's look at it for a higher seismic capability.

Now when the flooding results come back we're going to say what does that tell us, and what do we do with that? Can we still make FLEX strategies work, do we need to modify them, or do we need to come up with some other strategy?

MEMBER RAY: Here just today we're not even dealing with the seismic.

MR. BAUER: Well, we are. The seismic --- for those of you having to do it, it has to be done by the end of this year.

MR. AMWAY: By the end of this year we have to have ---

MEMBER RAY: I understand, but we're not at the end of this year, and we're just here now looking at extended loss of all AC power.

MEMBER RICCARDELLA: You know, but in the seismic area I think I heard you say that you designed your equipment to two times the current SSE. That's an example, right, of building in some margin. You designed this new FLEX equipment to not just SSE, but two times SSE. So, I went back and I looked at the CS

1 study, and most of the plants, the new GRMS is less than
2 two times the current SSE ---
3 MR. AMWAY: And if you look at the guidance
4 for doing the ESEP, the maximum you would have to design
5 to regardless of whether you're reevaluated hazard is,
6 is two times SSE.
7 MEMBER RICCARDELLA: But there are some
8 plants, North Anna is one of them, that it's more than
9 two times SSE.
10 MR. WEBSTER: We looked at --- you know, in
11 the buildings it isn't that, but we did a margin
12 evaluation using it, and we verified them, because you
13 had movement but there's no --- there's nothing around
14 it that would interfere with it.
15 MEMBER RICCARDELLA: I understand that.
16 MR. WEBSTER: So, we got some confidence
17 ---
18 MEMBER RICCARDELLA: Yes, that wasn't
19 really the question. I assume you're ultimately going
20 to do a seismic margins analysis of all this equipment.
21 MR. WEBSTER: Right.
22 MEMBER RICCARDELLA: So, it wasn't
23 necessarily designed to the new GMRS.
24 MR. WEBSTER: And I think to be clear, I
25 think we more --- we didn't actually put the two times

1 SSE in the design inputs and using all the codes and
2 standards with that. It was more of a margins
3 --- everything we did was more of a margin than actually
4 saying I designed it for two times the SSE.
5 MR. POWELL: And in the case of Palo Verde,
6 we're designed at .25 G, so two times SSE would be
7 difficult for us. We're also a Western plant, so we're
8 heavy in the middle of the SSHAC, our Senior Seismic
9 Hazards Advisory Committee, so we included some margin
10 for seismic. We had some preliminary information
11 knowing from a Level 2 seismic PRA that where we had
12 some exceedances at lower frequencies. Well, we're
13 really working hard with our SSHAC and our
14 Participatory Peer Review Panel to reduce those
15 uncertainties, but we won't have our results until
16 after the first of the year; yet, we had to be fully
17 implemented in Unit 1 this fall.
18 (Simultaneous speaking.)
19 MEMBER RICCARDELLA: You can either do them
20 in parallel or do them in series.
21 MR. AMWAY: And if I could go back to the
22 comment, because I'm still not sure we really nailed
23 this down with FLEX equipment and its relation to the
24 SAGs, because ideally if you implement FLEX and you do
25 it the way it's all supposed to be out and planned, you

1 never get to a point where you should enter our SAGs.
2 You should always stay in your EOP levels. But at the
3 same time, I don't want my operators to think everything
4 this building is only for an ELAP. You know, if I get
5 into a condition where things are worse, they don't go
6 according to plan, I want to give my operators the
7 freedom to know that hey, if you're in some other event
8 and it would really be good to have this portable pump
9 to do something with, or the portable generator, or
10 anything else they have in there, that they at least
11 have that freedom that when they're implementing the
12 SAG strategies they know it's there, they can go get
13 it and use it. It's not like they can tell you I'm going
14 to specifically use this portable pump for this SAG
15 strategy. That's not the way they're even written, or
16 symptom-based. But, you know, putting water on the fuel
17 is going to be a priority in the SAGs just as it is in
18 EOP. It's just later in the event sequence, and if that
19 portable pump can do the job, I want him to be able to
20 use it.
21 CHAIRMAN SCHULTZ: Other questions related
22 to Bill's presentation? Okay, Scott, we'll move
23 forward.
24 MR. BAUER: Okay. So, we have several things
25 we haven't done here, so my intent was at this point

1 to skip forward to the National SAFER Response Center
2 presentation, and not go through a similar presentation
3 what Bill just did for BWR. And then we also have two
4 short videos, one that shows a kind of a validation
5 --- the one that shows an ELAP event from a control room
6 response standpoint.
7 MEMBER CORRADINI: So, can I ask a question
8 about the skipping of the BWR part? So, what sorts of
9 things are obviously different that we should be aware
10 of in the BWR? The one that I guess I think I'm correct
11 about is the condensate storage tank and whether it's
12 seismically qualified as a source of water for RCIC.
13 Is that a true statement, or am I wrong?
14 MR. AMWAY: I think in general that's true.
15 There are some boilers that have seismically qualified
16 CSTs and if they're powerable they'll use them for RCIC.
17 In most cases you'll find that they're probably not.
18 In my specific example with Nine Mile 2 it's not, so
19 RCIC will --- I mean, our procedures are flexible
20 enough that if the CST survives the event, it's
21 non-seismic, it was caused by something else and the
22 CSTs are still there, I would use it.
23 MEMBER CORRADINI: Right.
24 MR. AMWAY: But for my FLEX strategies I'm
25 not counting on it, and I will take suction from the

suppression pool, and I'll do the anticipatory venting to preserve RCIC operation as long as possible.

MEMBER CORRADINI: The reason I asked that specific one is that that changes the timeline based on essentially what's happening in the plant heat up internal to the drywell, or into the wetwell.

MR. AMWAY: Right.

MEMBER CORRADINI: And so the timing would be qualitatively --- or the timing might be the same. I don't even know what the timing would be, but ---

(Simultaneous speaking.)

MEMBER CORRADINI: --- qualitatively different. It's driven by different events, or behaviors, I should say.

MR. AMWAY: Yes. To actually implement our FLEX strategies, I mean, we just did the analysis assuming CST is not available because it's not qualified for all hazards.

MEMBER CORRADINI: Right. Right.

MR. AMWAY: Now, we've done some sensitivities in terms of if it was available and we used it, and we injected, you know, does it buy us more time, less time? And when you really get to the end of it, it's really not that much different in terms of the overall containment heat up.

1 MEMBER CORRADINI: So, is that just
2 --- that's the one that I'm focused on. Are there are
3 others that are significant to at least let the Members
4 know about?
5 MR. AMWAY: I would say yes, another good
6 example, and that's the good thing about doing Nine Mile
7 Point because Nine Mile 2 is a BWR-5 with a Mark-II
8 hazard RCIC system. Nine Mile 1 doesn't have RCIC or
9 HPCI, and they use the isolation condensers, so there
10 is no --- unless we hook it up in FLEX, there is no
11 injection. And we are relying on a strategy where the
12 ECs remove containment heat. It's actually discharged
13 directly out to the atmosphere so as long as the ECs
14 remain available and we take actions in FLEX to maintain
15 those available, that we don't have --- you know, we're
16 not approaching any limits inside our primary
17 containment. To do that, you're relying on your seal
18 leakage analysis and the rate at which level is going
19 to go, and to the time that you have to hook up a FLEX
20 pump. And we've done that analysis based on --- we've
21 actually done testing for the recirc seals, and there's
22 five of them in Nine Mile 1. They have five recirc loops,
23 so five sets of seals. The maximum leakage as tested
24 is 4 gallons a minute, so you're looking at 20 gallons
25 a minute there, plus our maximum tech spec allowable

leakage of 25, so we assume very conservatively 45 gallons per minute leakage is the loss term now at the reactor pressure vessel which gives us 5.7 hours until we approach top of active fuel. So, our FLEX timelines are a little bit different in terms of it's of priority importance to get the FLEX pump hooked up, put it in place, get it ready to inject so that when we do get near top of active fuel that we're actually ready to inject with that pump. So, that's a pretty significant difference in that strategy there.

MEMBER RAY: And what pressure will you be injecting at then?

MR. AMWAY: For the ECs in service, our plan is to put the EC in service which brings pressure down fairly rapidly, such that by the time that we need to inject it should be well within the shut off head of the FLEX pump, because the way the EC works, the pressure is going to come down rapidly and then tail off. And then it will maintain the reactor coolant system somewhere between about 230 and 250 degrees, and it will --- you know, it works on the driving head from the RCS back to the RCS loop, so once you get down to like 20-30 pounds, you don't have that driving head and it will, essentially, stall. But if it stalls you're no longer removing heat, pressure comes back up, and

1 the flow will reinitiate, so it'll sit there and it will
2 cycle at about a 20-30 pound band that's somewhere below
3 50 pounds in the RCS.
4 MEMBER RAY: Okay, thank you.
5 MR. AMWAY: You're welcome.
6 CHAIRMAN SCHULTZ: Scott, how many
7 presentations do we have left? We have --- if we wanted
8 to do them all, we have Phil's presentation, and the
9 presentation associated with SAFER?
10 MR. BAUER: SAFER, that's it. We've talked
11 about the reevaluated hazard and I think that --- that
12 was a slide presentation again.
13 CHAIRMAN SCHULTZ: I'd like to do Phil's
14 presentation. I know he's --- I went through it and I
15 didn't see a lot of repetitive information. And I know
16 that ---
17 MR. BAUER: We just going to eliminate the
18 repetitive stuff.
19 CHAIRMAN SCHULTZ: I know you have, and
20 that's why I wanted to have Phil present it. Boldly step
21 forward with it, Phil, please. We're going to break
22 for lunch and we're going to figure out how we're going
23 to coordinate the SAFER Response. I think we're going
24 to break for lunch, depends how fast Phil goes.
25 MR. AMWAY: It depends on how many questions

1 I get. Okay. So, as far as presentation topics we've
2 got today, I'll just give you an update where we're at
3 with the BWR at Nine Mile Point. I do have a short video
4 on the control room station blackout response that was
5 actually done by Southern Company for me. It's not Nine
6 Mile Point, but if you look at the standard response
7 across the BWR fleet it's very similar.
8 The FLEX mitigation strategies overview
9 for each unit, the FLEX storage and deployment. I do
10 have a few slides on our spent fuel pool level
11 instrumentation installation, and then just one
12 summary slide which goes into our NRC audit summary
13 results. I know that's a topic for this afternoon.
14 Our project status right now, we implement
15 Nine Mile 1 in April of 2015, that's spring of next year.
16 Nine Mile 2 isn't until 2016. And because they are very
17 dissimilar units, the strategies are really quite
18 different. So, we are certainly much closer, we've done
19 all the design work for Nine Mile 1. The design work
20 for Nine Mile 2 is still in progress. There are still
21 some evaluations and calculations not complete for that
22 unit.
23 For the spent fuel pool level indication,
24 we are installing that now. We should complete Nine Mile
25 1, Nine Mile 2 installations before the end of the year.

1 And we will do our communications enhancements under
2 the 50.54(f) letter by spring of next year.
3 Procedures that support that
4 implementation of FLEX for Nine Mile 1 are about 70
5 percent complete. And the training for FLEX for Nine
6 Mile 1 should be completed by early next year. It's in
7 progress right now.
8 Operations training for spent fuel pool
9 level instrumentation has already been complete. We'll
10 have that done ahead of schedule, and our robust
11 structure will be completed by February of this year.
12 You'll see some slides on where we're at with that.
13 I just wanted to go in this slide before
14 I go into some of the details, just a high level --- this
15 is our initial event response to a station blackout.
16 I think as we've had discussions with the PWR side, that
17 initially when you get --- I mean, you don't know an
18 ELAP is going to be an ELAP until you're in it for a
19 little while, but we're structured our procedures so
20 that it's transparent in terms of whether this is going
21 to be an SBO under 50.63, the current 4-hour coping that
22 both of our plants are in, or the extended loss of AC
23 power. Those initial set of actions you want to be at
24 the same as either condition so you're not trying to
25 have to back up and then re-go down another path. So,

1 the initiation of the event is going to be triggered.
2 There's going to be multiple annunciators in the
3 control room. You're going to see that the control room
4 lighting shuts from its normal power source to
5 emergency power lighting. The SRL in the control room
6 is going to recognize the event. He's going to update
7 the crew, let them know of the station blackout
8 condition. And the way we generally do that is a loss
9 of power to all 4160 buses, and none of the emergency
10 diesel generators start and load their respective
11 buses. That's the entry conditions that say you're in
12 the SBO condition.
13 Then the SRO is going to enter the
14 emergency operating procedures, first going to confirm
15 that the reactor is shut down with all control rods
16 inserted, actions to stabilize reactor pressure that's
17 going to be on the SRVs in this particular event. And
18 then RCIC will help out with pressure control once it's
19 started and injecting.
20 Then reactor water level stabilization
21 will be initial void collapse in the BWR. It'll trigger
22 RCIC to start on double low level, and then RCIC will
23 recover level back to the normal operating band.
24 The same operator that initially does the
25 power control actions confirms reactor shutdown,

1 reports that out, will then be assigned to perform the
2 steps of the station blackout procedure which will
3 branch out and do all the things to preserve RCIC,
4 enhanced ventilation in the control room, the RCIC
5 room, you know, look at power restoration. It has steps
6 in there to direct operators out to do some initial
7 checks with the diesel generator. Maybe this is
8 something that they can rapidly turn around, repower
9 the respective buses, and exit the station blackout.
10 So, I want to go through this first with
11 you before I showed you the video, because the first
12 time you see it, you know, it's helpful to have the
13 sequence of events. This is exactly the way that you'll
14 see it play out on the video.
15 (Video played)
16 MR. AMWAY: Okay. So, I mean, in that video
17 you saw this whole scripted exercise play out. You know,
18 what's really critical is you're looking at that from
19 the perspective of that's the minimum staffing you
20 would normally have in the control room, two reactor
21 operators to respond to the event, one SRO having the
22 oversight function in the control room. And that's the
23 initial actions that they would take. Now, the
24 additional actions will broaden out once --- you saw
25 the transition between when the SRO gave the operator

1 the direction to confirm reactor shutdown. That's a
2 fairly short-term action. There's checks he does, makes
3 that confirmation, and then he was assigned the action
4 to enter the station blackout procedure. That's where
5 you start getting into the differences between, you
6 know, the longer term. We've stabilized the plant,
7 level and pressure are under control, and then we branch
8 out into the actions where we're going to preserve the
9 RCIC operation. We're going to do things like load
10 shedding to preserve DC power, and look at power
11 restoration.
12 We'll go through Nine Mile 1 first. Nine
13 Mile 1 is a boiling water reactor 2 with a Mark-I
14 containment, 1850 megawatts thermal. It's been in
15 commercial operation since 1970, and it does have
16 license renewal in effect so its license expires in
17 2069.
18 The picture that I showed here, this is a
19 piping instrumentation diagram, the emergency
20 condensers. I'll describe them a little bit more in
21 subsequent slides, but that's a --- you know, most of
22 the BWRs have RCIC and there are strategies involved
23 using RCIC. This is where Nine Mile 1 is different. They
24 do not have a RCIC system. And then we put the ECs in
25 service, the emergency condensers in service right

1 away.

2 I used the term "emergency condenser",

3 "isolation condenser" interchangeably. They are the

4 same thing. At Nine Mile Point for whatever reason it's

5 always been called an emergency condenser.

6 This is a picture of what it looks like when

7 the emergency condenser is in service. We do test these

8 on a periodic basis to confirm their functionality and

9 heat removal capability. You can see just the one in

10 service. There's a set of vents out the side of the

11 building. You can see the steam discharge from boil off

12 in the tube as the heat is exchanged. It's also quite

13 noisy when it's in service. You can definitely tell when

14 it is in service.

15 MEMBER SKILLMAN: Hey, Phil, previous

16 slide. You said 2069.

17 MR. AMWAY: 2029, sorry.

18 MEMBER SKILLMAN: Sixty years.

19 MR. AMWAY: Yes, it's a 60-year, but it's

20 29, not 69.

21 MEMBER SKILLMAN: Thank you. All right.

22 (Off the record comment)

23 MEMBER BLEY: I think you told us one of the

24 last times you were here that you made sure you don't

25 have any of the logic glitches in the emergency

1 condenser that showed up in the Fukushima report
2 described in there. That's true, right?
3 MR. AMWAY: That is true. Our emergency
4 condensers are a little bit forgiving in terms of that
5 they fail, you know, with the loss of power, loss of
6 air, it fails in a condition that you'd want it to be
7 in, which is essentially in service. We do have to send
8 an operator out locally to control -- our ECs makeup
9 tanks. Not every plant that has ECs have makeup tanks,
10 as well, but that valve for the makeup tank fails open,
11 so to conserve those we want to send an operator back
12 to manually throttle that back and control the level;
13 otherwise, you're just wasting it, and instead of the
14 eight hours, you're going to be significantly shorter.
15 As far as the Phase 1 core cooling
16 strategies at Nine Mile 1 using the emergency
17 condensers, they go into service automatically on loss
18 of power. We are planning to take actions manually to
19 put those in service even sooner because until we do,
20 we could be cycling on the ERVs and that's just wasting
21 inventory. So, we want to get these isolation
22 condensers in service as soon as possible and minimize
23 that inventory loss.
24 Pressure lowers quite rapidly with the ECs
25 in service, and as I stated earlier, we expect that to

1 come down and actually stabilize at somewhere around
2 50 pounds reactor coolant system pressure. It will
3 cycle because they'll stall and come back in service
4 as the driving head is reduced and then regained.
5 Our analysis shows that with their maximum
6 reactor coolant pump seal leakage and maximum tech spec
7 leakage that we have 5.7 hours before we reach the top
8 of active fuel. And with our load shedding strategies
9 in place, our DC batteries are good for at least eight
10 hours.
11 MEMBER BLEY: Something in your training
12 make sure people don't get overly concerned about
13 over-cooling and turn the darned things off.
14 MR. AMWAY: Yes. We have intentionally made
15 our strategy to put the EC in service and leave it in.
16 MEMBER BLEY: Let it run.
17 MR. AMWAY: We know that it will exceed 100
18 degrees and hour, and we are stressing that in training,
19 but when we looked at the tradeoffs between --- you
20 know, the EC is either in service or it's not, so your
21 only option is you put it in and you leave it in, or
22 you're going to try to control 100 degrees an hour by
23 putting it in service and taking it back out. For a
24 variety of reasons it's much better to put it in and
25 leave it in.

1 MEMBER REMPE: Is that a change or it was
2 always that way?
3 MR. AMWAY: That's a change. I mean, in tech
4 spec land you maintain less than 100 degrees an hour,
5 so under normal situation design basis events you
6 wouldn't do that. But in the ELAP condition, the way
7 we're structuring it, we're going to put it in, leaving
8 it.
9 MEMBER REMPE: Okay.
10 MR. AMWAY: In terms of containment
11 cooling, Phase 2, we provide that to the RPV using a
12 diesel-driven portable pump. There are a number of
13 modifications listed here which I'll describe on the
14 next slide which shows it pictorially.
15 We are actually tying into the CRD return
16 line as a method of RPV makeup. And you'll see, you know,
17 these pumps here will be without power. The normal flow
18 path, you see these two valves closed, and that
19 separates the system, CRD systems have a charging
20 header, and to be able to move the rods, and the exhaust
21 header comes back and returns to the reactor pressure
22 vessel this way. So, these valves will already be open,
23 and the only one that the operator would have to do
24 inside the reactor building is this one right here,
25 which is this first isolation of the system.

To connect the portable pump, you know, we'll have a suction hose that goes into the intake structure. We run it inside this reactor building vestibule. This is protected from all hazards, and they'll be able to connect up to a valve manifold. One of those tie-off, tap-offs will be to this injection point.

In terms of distance, what you're looking at is if I stand in this entryway and look over, I can actually see that connection point from this point right here, so it's not that great a distance. It's on the same grade level elevation.

That same pump and manifold is used to also supply the EC shells. As I said, this makeup tank here provides up to 8 hours of makeup capability. This is the valve we'd have to take manual control of so we don't flood out the EC. If you did flood out the EC, it's not going to stop it from working, but you're just essentially wasting the water, wasting the inventory here so that is a manual operator action to go out and do that.

For spent fuel pool cooling, we have 8 hours to go from 140 degrees which is maximum design temperature up to 212 degrees.

MEMBER BLEY: That's the calculation if

1 your pool were completely filling. You just ---

2 MR. AMWAY: That is for our design base heat

3 load full core offload. We have significantly more time

4 than that under other conditions. I will note that we

5 don't normally maintain our pool anywhere near 140

6 degrees. It normally ranges between 90 and 100, so

7 there's additional margin there.

8 Once we get to boiling we have 45 hours to

9 reach level 2, which is 10 feet above the fuel. And our

10 makeup needs, assuming worst case heat load in the pool

11 is about 43 gallons a minute.

12 For the strategy in Phase 2, the

13 diesel-driven pump into that manifold is able to make

14 up to the spent fuel pool, run a hose up to the level

15 below the refuel floor ---

16 MEMBER BLEY: Just a question on that last

17 one.

18 MR. AMWAY: Yes?

19 MEMBER BLEY: It was a surprise for me, I'm

20 not sure if it was for everybody in the NRC's spent fuel

21 pool study that was recently done, that changing your

22 fuel pool loading such that you load --- where you have

23 empty spaces and where you have old fuel and new fuel

24 could really make a big difference in heat up times and

25 the like, because of using effectively, because the

1 older fuel could act as a heat sync for the newer fuel,
2 and you didn't get local areas where you could get steam
3 and other things going on.
4 MR. AMWAY: Yes.
5 MEMBER BLEY: Did you look at that at all?
6 MR. AMWAY: We didn't do that as a method
7 to try to ---
8 MEMBER BLEY: You have plenty of time.
9 MR. AMWAY: We have more time. We just said
10 C-we just looked at it from the total if you discharge
11 this whole pod of fuel into the vessel it's this amount
12 of heat.
13 MEMBER BLEY: Okay.
14 MR. AMWAY: We also didn't credit anything
15 in that analysis for conduction through the walls or
16 evaporative cooling, or anything else like that either.
17 MEMBER BLEY: Okay.
18 MR. AMWAY: So, the hose actually runs from
19 the manifold on the reactor building grade elevation
20 up to Reactor Building 318. Like I said, that's one
21 level below the refuel floor, and then it's hard-piped
22 over up to the next level into the spent fuel pool.
23 For alternate makeup capabilities for RPV
24 makeup, this shows a picture, and we've actually tied
25 this in with NFPA-805 modifications. This is our

firewater header. This is the feedwater header. We used to have a spool piece in here an operator would have to put into place. Under NFPA-805, we removed the spool piece, made it hard pipe, and we also put in this tie-in for the FLEX. So, the FLEX portable pump can be hooked directly into this connection, open the isolation valve directly into the feedwater system and there's no spool piece any more to have to put in place.

MEMBER BLEY: Are you one --- no, you're two valves away from the fire main. Okay.

MR. AMWAY: Actually, yes, two valves, right here.

MEMBER BLEY: And then one more in the feed line. Yes, okay.

MEMBER BALLINGER: Can we back up one slide?

MR. AMWAY: Sure.

MEMBER BALLINGER: I know that's a schematic, but that room appeared in three different slides for three different operations. That room you say is built first out. I mean, it's ---

MR. AMWAY: Oh, yes.

MEMBER BALLINGER: I mean, that's a single point of ---

MR. AMWAY: Yes. It's fully robust inside this area. And if the manifold is in there, like I said,

1 I mean this part here from each of the pictures is the
2 same. What's different is the manifolds that you tie
3 off of to run to the different areas. So, you know, most
4 places you just have an RPV and a spent fuel pool makeup.
5 Because we have the emergency condensers, you know, the
6 boil off is really coming to the emergency condensers,
7 the seal leakage is going to the RPV, so it's just split.
8 MEMBER BLEY: On the previous slide, you
9 don't have to get it for me. Not the sky is falling or
10 anything, but once --- if we get everybody hooked up,
11 are piped into the fire main while it was in place what
12 do you think the chance is somebody is going to get
13 chlorides into their primary system one of these days?
14 That's why the spool piece was there.
15 MR. AMWAY: That's why the spool piece was
16 there. I agree, and it's tradeoffs. I mean, we have the
17 administrative control, we have the multiple valve
18 isolations, the fire --- the only way it could get there
19 is if your RCS is at reduced pressure because the fire
20 main is only good for 150 pounds. So, you know, we think
21 we've taken a look at the appropriate level of risk and
22 ---
23 MEMBER BLEY: When you shut down for
24 maintenance and depressurize, you don't have a drain
25 valve or something to drain out between the valves?

1 MR. AMWAY: No, I don't --- I didn't look
2 at the picture, but I don't ---
3 MEMBER BLEY: There might be one down there.
4 MR. AMWAY: Yes, it might be a drain valve
5 down there. I don't know. I can't tell. But as far as
6 I know, I mean ---
7 (Simultaneous speaking.)
8 MEMBER BLEY: Still it's something to think
9 about.
10 MR. AMWAY: Right. Let's see, alternative
11 to EC makeup. Again, this goes instead of going directly
12 into the EC shell, there's an alternate location that
13 we connect to with a hose. And with the spent fuel pool
14 makeup we can run the hose up an alternate path and
15 directly onto the refuel floor into the pool.
16 As far as electrical power, safety-related
17 batteries are calculated to last at least 8 hours. That
18 does count on us doing a load shedding occurring within
19 30 minutes. The load shedding procedure for Nine Mile
20 1 is a very simple --- it's, you know, a couple of pages,
21 and it's in a localized area. And we actually did this
22 in a walk down, validated it works, and when the NRC
23 audit came to Nine Mile Point we actually demonstrated
24 that for the auditors that we could do it successfully
25 in that time frame.

1 Phase 2 electrical power, we have a
2 portable diesel generator. It'll connect to the AC side
3 of installed battery chargers. We do have a backup plan
4 that if we can't use the installed battery chargers,
5 we have portable static battery chargers that can go
6 directly into the battery boards 11 or 12.
7 Schematic layout of what this looks like.
8 These are the battery chargers, our portable diesel
9 generator here, and we have a tie-in connection point
10 that goes right through the battery chargers and
11 supplies all DC loads. This is the alternative strategy
12 where we have portable static battery chargers brought
13 in and connect directly into the battery board.
14 In either case, you're supplying the same
15 set of loads. It's just whether you're using the
16 installed equipment or portable equipment to do it. We
17 preferentially choose the 12 side, what's in yellow
18 here. If we re-energize this side, we also regain a
19 substantial portion of our emergency lighting, but
20 alternatively we can make the strategy work if we go
21 to the 11 side.
22 In terms of Phase 3 at Nine Mile Point, we
23 have our strategies in place where our Phase 2 equipment
24 provides the indefinite coping, and we can demonstrate
25 that we can maintain the key safety functions for at

1 least 72 hours. Anything that we receive from the
2 National Response Center would be as a backup to the
3 Phase 2 equipment, and we made sure that our connection
4 points are compatible with that supplied by the
5 Regional Response Center. So, anything we get for the
6 National SAFER Response Center is a backup and a spare
7 to our Phase 2 strategy that we continue to implement.
8 And that's really the same philosophy that we have both
9 at Nine Mile 1 and 2.
10 Nine Mile 2 is a little bit different. It's
11 a BWR 5 with a Mark II containment, much higher power
12 rating. It is an uprated core at 3988 megawatts thermal.
13 Initial operation 1988, and we have license renewal in
14 place at 2046, and not 2066.
15 Our Phase 1 strategy is accomplished by
16 using reactor core isolation cooling, safety relief
17 valves for pressure control, so this is much different
18 for Nine Mile 1. Nine Mile 1 you're ejecting decay heat
19 directly to atmosphere. Nine Mile 2 it's going into the
20 containment like most BWRs.
21 Our initial analysis says that the
22 containment parameters will remain sufficient to
23 maintain RCIC operation for at least six hours. I don't
24 want to confuse this with the containment design
25 parameters. At the end of six hours, we still have

1 plenty of margin in terms of pressure and temperature
2 in the containment. This is particularly for RCIC, and
3 I'll describe that in the slide coming up.
4 Deployment of the portable pump is planned
5 for four hours. We'll be doing validation to make sure
6 we can meet that time frame. And the electrical power
7 for critical instrumentation and control is calculated
8 to last at least 12 hours at Nine Mile 2. That's using
9 safety-related batteries.
10 So, our Phase 1 strategy, we'll cycle SRVs
11 to maintain pressure under control, and to maintain
12 pressure sufficiently high that we can keep reactor
13 core isolation cooling in service. We do plan to
14 implement the hardened containment vent order Phase 1
15 concurrent with the FLEX implementation outage, so we
16 will use that vent path to extend RCIC operation beyond
17 six hours. So, the six hours assumes no venting. If we
18 do the anticipatory venting, we will be able to extend
19 RCIC out for an extended period beyond that as we
20 maintain pool temperature below 240 degrees
21 Fahrenheit. Reduces the challenge to the primary
22 containment by being able to use that vent path. And
23 as I stated, we'll install that spring of '16 concurrent
24 with FLEX.
25 This is a picture of what our hardened

1 containment vent will look like. The reason why I show
2 this valve in red is currently we are in conformance
3 with general design criteria in 56 where the inboard
4 valve is inside containment, the outboard valve is
5 located right off the penetration outside. For the
6 hardened vent order we do plan to relocate the valve
7 from inside containment to outside. To do that, we have
8 already filed a GDC-56 exemption. It's already been
9 through the acceptance review with the Staff, and they
10 are now in with the detailed technical review of that
11 exemption.
12 It does tie in and share the same flow path
13 that our gas treatment train would take, but before the
14 gas treatment train we tie off and go to a separate
15 chimney to vent from the containment. All of these
16 valves here at the GTS system, are normally closed, fail
17 closed so that if we did have an ELAP condition the GTS
18 system is isolated from the containment vent path.
19 Core Cooling Phase 2, once we transition
20 off of RCIC, we'll utilize the diesel-driven pump. The
21 modifications include a dry hydrant that will be
22 installed in the service water tempering line. The
23 tempering line has --- you know, it's a long section
24 of pipe that's underneath the water level in the intake
25 structure, and it has a series of one-inch holes which

1 would help with making sure we don't suck up large
2 debris, but it is of sufficient length that even if some
3 of the holes became clogged that we would still be able
4 to draw water from that side. And then we'll connect
5 from the discharge of the portable pump to the RHR
6 system.
7 This shows it pictorially. This is the pump
8 taking suction, discharging into a valve manifold
9 that's very similar to what we have with Nine Mile 1.
10 It's just larger capacity. And then we'll connect off
11 of that manifold directly into RHR.
12 We have three --- actually, three loops of
13 RHR, our primary and alternate strategies, one goes
14 into RHR A, the other goes into RHR B, but the systems
15 are functionally equivalent.
16 In terms of spent fuel pool for Phase 1,
17 we use the initial inventory that's in the pool. We have
18 5.4 hours to go from 140 to 212 degrees. And once we
19 start boiling, we have 32 hours to reach Level 2, which
20 is 10 feet above the fuel. And then our makeup
21 requirements for spent fuel pool at Nine Mile 2 is 73
22 gallons a minute.
23 Spent fuel pool cooling Phase 2, we will
24 make up with the portable diesel-driven pump. It uses
25 the same pump because it's going to the manifold, and

1 then the --- we will tie into RHR. RHR has the
2 distinction of being able to go to many different
3 places, one of those is alternate spent fuel pool
4 cooling, and it provides a path that we could provide
5 makeup, as well.
6 Our alternative makeup strategies, our
7 normal path connection paths through RHR A, the backup
8 is through B, it's very similar but it's an alternate
9 injection path. And for the spent fuel pool, if we're
10 not able to do it with RHR, we can run hoses up to the
11 refuel floor directly into the pool.
12 In terms of our safety-related batteries,
13 as I said, the batteries will last, assuming we do the
14 appropriate load shedding in 12 hours. The Nine Mile
15 2 load shedding procedure is a little bit more
16 complicated than Nine Mile 1, but it's structured so
17 that you don't have to do it, you know, all by one given
18 time. There are certain portions of it you do by 30
19 minutes, certain portions of it that you do in 60
20 minutes, and other portions that you can go out to 2
21 hours before you do it. Those time frames are spelled
22 out specifically on our station blackout procedure as
23 far as when you have to do these time sensitive actions,
24 and the procedures are set up to be able to dot hem in
25 a stepwise fashion to be able to meet all the time

1 frames.

2 The analysis works out to be the same for

3 both divisional batteries. Div 1 is a little bit more

4 important to us because Div 1 also supplies the DC logic

5 for reactor core isolation cooling. So, as a priority

6 we would want to protect Div 1 and restore Div 1.

7 In terms of Phase 2 for electrical power,

8 we'll use a diesel generator connected to the Division

9 1 600-volt switchgear with a breaker connection device.

10 I'll show you what that looks like in a minute. As I

11 said, Division 1 is preferred because of the RCIC system

12 DC power is powered off of Division 1. If we're unable

13 to connect it to Division 1, we have similar connection

14 points in Division 2.

15 This is a representation of what the

16 Divisional switchgear looks like. You'll see that we

17 tie in priority is Division 1, and then their alternate

18 strategy is to go in Division 2. This will go directly

19 into the switch gear so we would have the ability to

20 regain all 600-volt loads which steps down and supplies

21 our battery chargers and our DC supply, which is where

22 all of our instrumentation and control comes from.

23 This is a picture, and this isn't ours

24 because we don't have ours yet, but it's going to look

25 very similar. This is a bus connection device. It's

1 essentially a 600-volt breaker that has all the
2 internals removed, and it's just a means to get your
3 connection point which is the bus at the back out to
4 these connectors. They have the same color codes, the
5 same sizes that you saw in the earlier presentations,
6 and it's also very consistent. It's the same as what
7 we would get from the Regional Response Center. So, the
8 covers you see on here, if you take these covers off
9 you actually have --- you could actually see the
10 conductor is right there. When you slide over the other
11 connection and turn it then it's locked in place and
12 that provides the power to the switch gear.
13 We have yet to decide whether we're going
14 to actually put these in erectile position actually in
15 the switch gear, or have them staged, pre-staged
16 locally at the switch gear. Either way we do it it's
17 going to be acceptable. It's really --- you know, we're
18 working between Ops and Engineering because if you
19 actually put it in the switch gear, it impacts the
20 seismic analysis and the safety-related function. If
21 you put on the floor, put it in after the event, it's
22 a reasonable action to take. They don't weigh that much
23 because the internals have been all removed, so that's
24 something we're working out, whether it will actually
25 be in there, or just rack in, or if you pick it up off

1 the floor and put it in the switch gear.

2 We'll be using 4/0 cable. It's

3 sufficiently sized for the amp carrying capability

4 through the breaker into the switch gear to supply our

5 needs. The size that we have is a 480-volt --- 450 kW

6 600-volt generator. Nine Mile 1 and Nine Mile 2 are a

7 little bit different from the rest of the industry. Our

8 low-voltage switch gear is 600-volt as opposed to 480.

9 Our Phase 3 strategies are a continuation

10 of Phase 2. Similarly to Nine Mile 1, we'll use SAFER

11 Response Center equipment as a backup to our Phase 2

12 equipment.

13 MEMBER SKILLMAN: Does that suggest that

14 SAFER has unique 600-volt equipment for Nine Mile, and

15 independent from that 480-volt for the bulk of the rest

16 of the industry?

17 MR. AMWAY: What we'll get is the same

18 480-volt generator that everybody else gets, but we are

19 also in a Site-Specific Equipment Committee that will

20 deliver a 480 to 600-volt step-up transformer so that

21 we'll be able to use it in our plant.

22 MEMBER SKILLMAN: Thank you.

23 MR. AMWAY: You're welcome. We have

24 evaluated our strategies for all modes and verified

25 they're workable. But keeping in mind that refueling

1 outages present many unique challenges and
2 opportunities for different configurations, we are
3 taking that into consideration in our Outage Risk
4 Management Procedures to make sure we address the FLEX
5 capabilities during refueling outages. And for those
6 activities that are determined to be high-risk, that
7 we have appropriate contingency plans in place for
8 those conditions.
9 Our deployment paths and equipment
10 locations will be marked with signs and postings
11 similar to how we've done with past experience with SBO,
12 and also for the EOPs. That's purely from a human
13 performance perspective.
14 In terms of our relation to the National
15 SAFER Response Center, we do have the necessary
16 Memorandums of Understanding in place to take care of
17 our Staging Areas A, B, and C. We will be doing a
18 site-specific response plan. That's currently ongoing,
19 to make sure that our engineers understand the
20 equipment that's being received from the National SAFER
21 Response Center, and that's factored into our
22 plant-specific designs to make sure there's
23 compatibility between the equipment we're going to use
24 in connection points, and what we'll be provided from
25 the National SAFER Response Center.

1 Even though the National SAFER Response
2 Center is contractually obligated to have our first
3 equipment on site in 24 hours, we have validated that
4 we could cope indefinitely and beyond without the
5 equipment. It's purely as a backup to our onsite Phase
6 2, so if we fail the pump, or we fail the generator,
7 we'd be able to have a backup and put it in place.
8 For the specific equipment we're looking
9 at getting, this is where I talked about in that
10 specific instance where a 600-volt plant, and to be able
11 to use the 480-volt generator, we have the
12 site-specific equipment of the step up transformer.
13 That's actually kept at the Regional Response Center,
14 would be delivered with the generator so we could hook
15 it up and use it.
16 In terms of FLEX storage and deployment,
17 we have our primary and alternate paths established.
18 This is an overview of the Nine Mile site. This is our
19 robust building. It's protected for all the hazards
20 applicable to the site per NEI-12-06. This is --- we
21 will store all N equipment for both units in this, as
22 well as our debris removal equipment. This building
23 over here will be constructed to ASCE-7-10 standards.
24 This is where we'll keep +1 equipment.
25 The primary path was selected to go along

1 the lakeside to avoid the potential for downed power
2 lines. You'll note that our alternate path does run
3 underneath power lines. For Nine Mile 1 we have the
4 advantage that our switch yard is accessible to us. We
5 can easily see whether the breaker sticks are up or down
6 to know whether the lines that we're going to pass over
7 are energized or de-energized. If we do have to manually
8 operate disconnect switches, that capability is
9 available in our switch yard.
10 These are some shots, you saw a completed
11 view of what it looks like at Dominion. We are building
12 a fully robust structure, it's 60 X 140 dimensions. It's
13 rectangular. This show what it looks like in the state
14 it was about a month ago with the foundation poured,
15 and getting ready to pour the floating slab.
16 You'll note these items in here. These are
17 our seismic tie-downs. They look raised simply because
18 we've got them covered over with duct tape filled with
19 sand to make sure that when we pour the concrete they
20 don't fill up with concrete.
21 Just a couple of pictures of what it looks
22 like. This is the later slide showing the foundation,
23 or the slab being poured. And I only included this
24 picture to show that clear days at Nine Mile Point are
25 in our design basis for the plant.

1 As I said, fully protected FLEX storage
2 building sufficient to store N. And we have completed
3 the onsite staffing study Phase 2 for Nine Mile 1. It's
4 yet to be completed for Nine Mile 2 because of the later
5 implementation date. We have allotted a three-hour time
6 frame with operators specifically dedicated to start
7 debris removal actions, and we are providing training
8 to qualify all of our operators to be able to operate
9 the pay loader. That's our largest piece of debris
10 removal equipment. The other pieces that we have, we
11 do have multiple trucks that will also be stored in the
12 N building that's fully protected. At least one of those
13 will have a snow plow attached to the front end for snow
14 removal. If we had to, we can also use the pay loader
15 for snow removal. It's certainly robust and capable.
16 The tractor that we have, generators are
17 very heavy, so a normal pickup truck wouldn't pull it,
18 but the tractor certainly has the capability to be able
19 to hook up and attach to the portable generator and move
20 it into location.
21 This is a picture of one piece of debris
22 removal equipment, our pay loader that we'll have
23 stored in the fully protected building. And as I said,
24 at least one of the other vehicles will be snow removal
25 capable.

1 In terms of refueling, we have to be able
2 to refuel all of our equipment. Both of our trucks will
3 be equipped with 500-gallon storage tanks. Those tanks
4 will have integral DC powered fuel transfer pumps
5 capable of 20 gallons per minute. We have onsite storage
6 capability of 140,000 gallons of diesel fuel that
7 normally supplies our safety-related diesels which
8 will not be operable during this event, so we would go
9 ahead and use that fuel to power onsite equipment. Our
10 fuel usage calculations show that we have enough for
11 at least 20-days supply. We have sufficient time to be
12 able to arrange with our local fuel suppliers to provide
13 us additional capability out beyond the 20 days.
14 We did actually validate. The way this
15 works is we hook up a transfer pump to our sounding tube
16 of the underground fuel storage tanks to make sure that
17 that was sufficient, capable of working in terms of the
18 fit-up and the delivery. We actually did a test and
19 confirmed that those transfer pumps in that
20 configuration will pump up to 30 gallons per minute of
21 diesel fuel.
22 All of our onsite portable equipment is the
23 Tier 3 engines. There's a --- I don't know if you're
24 aware of it, but there's diesel engines that are
25 designed on ultra low sulfur versus low sulfur,

1 difference being 15 ppm compared to 500. Some of our
2 storage tanks on site are below the 15 ppm threshold,
3 others are not, so we have --- you know, the Tier 4
4 engine you're pretty much limited to ultra low sulfur.
5 We have Tier 2 or Tier 3 that can burn either. All the
6 National SAFER Response Center equipment is the same
7 in terms of it's designed to run on either low or ultra
8 low sulfur fuel.
9 Spent fuel pool, I know this isn't really
10 a specific topic to hear. This is Order 51, but we do
11 monitor the level indication to know when it's time
12 under the FLEX strategies to be able to make up to the
13 spent fuel pool. Level 1 supports normal cooling system
14 operation, Level 2 makes sure that you have substantial
15 shielding so that you can get to the refuel floor. We
16 are the default value of 10 feet above irradiated fuel.
17 There were two choices. You could do 10 feet without
18 analysis, or you could select a lower level with
19 analysis. We went with the default value. And then Level
20 3 is the level at which the fuel just remains covered
21 with water, so essentially doesn't provide much
22 radiation shielding.
23 We chose the through-air technology. It's
24 fairly simple in terms of there's a radar horn. This
25 is actually installed right over the spent fuel pool.

1 There's a wave guide which is essentially one-inch
2 Schedule 40 pipe. This is the only portion that is on
3 the refuel floor. Our wave guide pipe as soon as
4 possible goes off the refuel floor to the next level
5 down so there's no electronic equipment that will be
6 on the refuel floor.
7 The sensor is actually what directs the
8 wave guide, or the radar pulse to measure the level.
9 That's on our next level down, and then it's electrical
10 connections to get into the location where the operator
11 actually reads it.
12 This display here has an internal battery
13 that should the normal AC power be lost, it
14 automatically converts over to DC internal. You see the
15 power usage for each channel is very low, it's a half
16 a watt. The advertised design of these internal
17 batteries, it'll supply seven days worth of power.
18 The backup, when we put in our FLEX
19 generator, the normal AC power that was lost would be
20 regained when we hook up the FLEX generator so we would
21 have ongoing capability to monitor level.
22 There's two per spent fuel pool. Nine Mile
23 1 and 2 have completely separate pools so they have to
24 have their own separate level indicators. Each one has
25 two channels per the FLEX order --- per the spent fuel

1 pool level instrumentation order. The required
2 accuracy is plus or minus a foot. Our actual
3 installation, the specification is plus or minus
4 3-inches in a steam environment. As I said, normal AC
5 power, once that's lost it has the battery backup and
6 will repower the FLEX generator as part of our FLEX
7 strategy.
8 Temperature limitations, the sensor
9 qualification is 176 degrees. To stay within that,
10 that's why we took it off the refueling floor and put
11 it the next level down. We have similar strategies to
12 everybody else where we open reactor building doors low
13 and high, sets up the chimney effect. Our analysis show
14 that we maintain below the qualification temperature
15 of 176 degrees.
16 Power availability, the AC power that
17 normally feeds both channels is independent power
18 supplies, and the rest of this is pretty redundant to
19 what I covered already. The FLEX generator provides the
20 backup power and the internal batteries.
21 To maintain separation on the refuel
22 floor, we install these in the corners which provides
23 some inherent protection. And then we install them with
24 a maximum length between separation that we could get.
25 Instead we connected to the spent fuel pool, and the

1 wave guide portion that's actually on the refuel floor,
2 that separation is maintained until it goes down to the
3 next level down.
4 My final slide here is just a summary of
5 the NRC audit results. We recently had our Staff audit
6 of our FLEX strategies. We started with 55 open items
7 at Nine Mile 1. During the audit we got three more
8 questions, and we've closed 50 of the original, and two
9 of the new, leaving us with six remaining open items.
10 Two of those responses have been supplied, we're just
11 waiting for closure of those, leaving us with four. The
12 way we plan to close those is as the analysis or whatever
13 information it was that we need to close those will
14 initially post that to the ePortal and it will
15 eventually be docketed to close out the open items as
16 part of the audit.
17 For spent fuel pool level, we successfully
18 closed all 18 items so there are no open items for spent
19 fuel pool level instrumentation. Nine Mile 2 it's a
20 little bit different. We started off with 56, we added
21 three, closed 36 of the original, plus two of the new,
22 leaving 21 open. The reason for the high number is
23 because, as I said, our strategies for both units are
24 very different. The implementation time for Nine Mile
25 2 isn't for another year, so some of the analysis and

1 calculations aren't yet complete, so you can't really
2 close the open item until that's done. So if you look
3 at the majority of the open items, if it wasn't for that
4 we'd be down closer to the number of Nine Mile 1.
5 Nothing in there rose to the level of
6 significant open items. They are just open, and I didn't
7 see any of those open items that are going to be a
8 significant challenge to any of our strategies.
9 That's the end of my presentation pending
10 any questions.
11 MEMBER BLEY: Yes, one. You may have told
12 us this, and it might have slipped by. You told us back
13 in the beginning when you were talking about the
14 emergency condenser, do you have alternative or backup
15 sources of water for that, or do you use any of the FLEX
16 equipment to pour water into that if you need it?
17 MR. AMWAY: Yes, our FLEX --- we have the
18 40,000 gallon makeup tanks which provide the initial
19 eight hours.
20 MEMBER BLEY: Right.
21 MR. AMWAY: We do use our pump to make up
22 to those makeup tanks.
23 MEMBER BLEY: To the tanks. Okay.
24 MR. AMWAY: Yes. And we have primary and
25 alternate strategies of getting that water to the

1 makeup tanks.

2 MEMBER BLEY: Thank you. I missed that, if

3 you told us before.

4 MR. AMWAY: Yes.

5 CHAIRMAN SCHULTZ: Other questions,

6 comments by the Committee? Phil, thank you for your

7 presentation. Since you talked about spent fuel pool,

8 I just want to come back to Dennis' comment earlier

9 about loading of the spent fuel pool. I know you focused

10 on loading for this purpose to develop a conservative

11 evaluation of the decay heat load and impact were you

12 to lose level. But if your reactor engineering team

13 hasn't looked at alternative loadings of the spent fuel

14 pool, they certainly may have, it would be worth their

15 while. Other licensees have found beneficial loadings

16 to provide additional margin in the spent fuel pool.

17 MEMBER CORRADINI: In fact, wasn't there a

18 recent --- there was a recent notice that just came out

19 on that.

20 CHAIRMAN SCHULTZ: That's right.

21 MR. AMWAY: There is, and we will certainly

22 take that back and look at it. I will say that there's

23 already some restrictions on what we can do for the B5B

24 strategy, and also because the pools are so full and

25 we offload campaigns, so that limits our ability to do

1 that. We'll certainly take a look at it.

2 CHAIRMAN SCHULTZ: You can look at it. Some

3 of that is complimentary.

4 MR. AMWAY: Yes.

5 CHAIRMAN SCHULTZ: Any other questions,

6 comments? All right, I'm going to break for lunch now

7 and ask people to return at 1:15. I know that's a short

8 lunch break but I do want to come back with this panel

9 and have the presentation related to the SAFER, and then

10 move into the NRC's presentation just after that. So,

11 short lunch period, but that will get us out of here

12 earlier this evening, I believe. Recess now until 1:15.

13 (Whereupon, the above-entitled matter

14 went off the record at 12:46 p.m., and resumed at 1:18

15 p.m.)

16 CHAIRMAN SCHULTZ: We're coming back on

17 the record after the lunch recess and we're going to

18 come back to the industry presentations. Scott Bauer

19 will introduce the next speaker and we're going to talk

20 about the National SAFER Response Center and the U.S.

21 nuclear industry.

22 MR. BAUER: The National SAFER Response

23 Centers, obviously we're enlisted to basically support

24 the Phase III of the FLEX strategies. I'm going to have

25 Dan -- Dan Brush is from Exelon. He's going to speak

1 to this topic. He is currently the chairman of the
2 SAFER Steering Committee and the Management Committee.
3 It's highly industry-run even though we selected SAFER
4 organization as the contractor. So Dan will explain
5 a little bit about that and then how we got to the point
6 of going live with these response centers.
7 So, Dan?
8 MR. BRUSH: So, good afternoon. Welcome
9 back from lunch. I'm Dan Brush. As Scott mentioned,
10 I do work for Exelon. Have for the last nine year. I
11 was fortunate enough to do 28 years in the Marine Corps
12 prior to that, both as a combat engineer and as a
13 logistician, so some of this ties in pretty well to
14 that.
15 As Scott mentioned, when the requirement
16 for the Phase II was initiated we did a competitive bid
17 and selected a new company, SAFER, to put these response
18 centers together for us, purchased the equipment,
19 established the specs for the equipment and then
20 maintain them throughout the life of the nuclear
21 industry.
22 We did in the beginning elect a steering
23 committee and then the rest of the industry
24 participated in a larger committee, a larger Equipment
25 Committee. When we elected the steering committee, we

1 asked for volunteers. Everybody took a step back and
2 Mike and I were left standing out front. So we led the
3 steering committee.
4 MEMBER BROWN: You didn't learn much in
5 the Marines then, did you?
6 (Laughter)
7 MR. BRUSH: -- charge forward and --
8 MEMBER BROWN: As a Navy guy, I knew how
9 to step back.
10 (Laughter)
11 MR. BRUSH: I should have spent more time
12 on boats.
13 (Laughter)
14 MR. BRUSH: Absolutely.
15 MR. BAUER: There's actually a little bit
16 more to the story because Mike Pacilio is the chief
17 nuclear officer and was overseeing this, so it made it
18 natural to have somebody from Exelon be the person in
19 the trenches making it happen.
20 MEMBER BROWN: There's no humor in that
21 statement.
22 (Laughter)
23 MR. BRUSH: So again, we were fortunate.
24 This was a very good effort. We've done a lot in a very
25 short amount of time as far as getting the industry

1 together, and we'll talk through some of those points
2 as we go through the slides.
3 So this is a depiction of where the two
4 response centers are, one in Phoenix and one in Memphis,
5 and the range that we can get by truck, by 18-wheeler
6 in 20 hours, roughly 50 miles an hour average speed.
7 Why Phoenix? Phoenix is kind of out by
8 itself in the West with not a whole lot of nuclear sites
9 near it, but does become a great all-weather hub or
10 good-weather hub for FedEx for moving equipment and it
11 made sense. Not lot of issues with
12 beyond-design-basis events typically in Phoenix.
13 Memphis happened to be the home of PECO.
14 PECO was one of the members of the SAFER company. The
15 other is AREVA. PECO for the last 30 years has done
16 maintenance of capital spares, large capital spares for
17 the nuclear industry. Warehouse them, maintain them,
18 store them, test them, make sure that they're up to
19 speed. And then if anybody needs something, get them
20 to the site that needs that piece of equipment rapidly
21 so we can get it in place and get back online, go back
22 to producing electricity.
23 Okay. So this is a timeline. I think you
24 all have hard copies, right?
25 PARTICIPANT: We do.

1 MR. BRUSH: Okay. So this is a timeline.
2 You saw this in one of the presentations earlier. It's
3 a 24-hour timeline. T-0 notification is not
4 necessarily T-0 of the event occurring. Rather, it's
5 when the site decides they need to make a call for the
6 equipment. That begins T-0 for the SAFER team to begin
7 to get their organization together, call FedEx and
8 start moving equipment. So we could be at T-1, T-2 for
9 the actual event, but T-0 for the SAFER team and this
10 24-hour clock.
11 So as was talked before, we begin
12 mobilization. We get trucks to the response centers
13 and begin to move equipment. First piece of equipment
14 as identified by the site could be any of the equipment
15 in the response center. Is on site in 24 hours. And
16 the remaining equipment closes on the off-site staging
17 area typically in 24 hours.
18 As you heard, the industry looked hard at
19 can we go longer than 24 hours before we actually need
20 to put this equipment in? This is redundant equipment.
21 We don't look at it as recovery. We don't look at it
22 as primary in almost every case, but it is redundant
23 equipment to replace the Phase II equipment that's
24 on-site portable equipment. And it's typically plug
25 and play. You unplug the Phase II equipment. You plug

1 in the Phase III equipment and you continue down that
2 path.
3 MEMBER SKILLMAN: Dan, let me ask this
4 question.
5 MR. BRUSH: Yes, sir.
6 MEMBER SKILLMAN: Just a curiosity
7 question. When a call comes for help for this
8 equipment, that's a serious event. People aren't
9 doing this frivolously. But what I experienced is,
10 particularly after TMI we would ask for help, and we
11 had truckers come and bring stuff that were inebriated.
12 Others were fitness for duty. Some of the equipment
13 was shabby. on an 18-wheeler 6 of the tires were
14 falling apart, rims were bent. Other equipment was
15 brand spanking new. Sometimes the tractor was
16 pristine and the trailer was -- looked like it had been
17 pulled out of the ocean.
18 So my question is when you make the call
19 and get the truck, how do you know the truck, the vehicle
20 and the driver, or drivers are fitness for duty?
21 MR. BRUSH: That's a great, great
22 question, and one of the reasons that we teamed with
23 FedEx. The response centers, the SAFER team has
24 procured new trailers for all the equipment. So each
25 equipment is trailered so it can move around a site,

1 but we also have them pre-loaded on 18-wheeler
2 trailers. So all FedEx has to give us is the tractor
3 to hook up to a trailer and drive it off. FedEx
4 maintains very strict, very high standards for their
5 drivers and their equipment. They are very quick. If
6 a driver team or a driver does not continue to meet their
7 standards, they will fire that driver and take on other
8 drivers.
9 MEMBER SKILLMAN: Thank you.
10 MR. BRUSH: Okay. This is a depiction
11 of -- a pictorial, if you will, on how we get equipment
12 from the response centers to the sites. So we get a
13 call. We activate the SAFER Control Center and they
14 in turn activate the people responsible to run the
15 response center. We call FedEx at the same time.
16 FedEx begins to move tractors into the response center
17 to hook up to trailers. And depending on the
18 conditions at the site -- if a site is physically
19 isolated or weather conditions or conditions from the
20 event would preclude us from getting to the off-site
21 staging area in the timelines that we need to, we may
22 move equipment by fixed air to a FedEx hub close to the
23 nuclear site. Otherwise, we're going to try and drive
24 it to the greatest extent possible just to get it to
25 that off-site staging area.

1 So across the top, you hook up to a tractor,
2 you go to the local. In Memphis there's a large FedEx
3 hub and in Phoenix there's a large FedEx hub. Load
4 aboard the FedEx planes. We are pre-loading the
5 majority of the equipment not only onto trailers, but
6 also onto pallets, heavy-duty pallets that can be
7 pulled off of the trailers and loaded right onto the
8 planes. We do have load plans for all of the equipment
9 for the planes to facilitate a rapid ingress and egress
10 getting onto the plane and coming off as we're loading
11 and off-loading.
12 CHAIRMAN SCHULTZ: Dan, who makes the
13 decision and what is the process for making the decision
14 about whether you're going to move by truck or through
15 the air? I mean, obviously there's some request that
16 comes, but who's responsible for making the decision
17 on --
18 (Simultaneous speaking)
19 MR. BRUSH: So the site in conjunction
20 with the local law enforcement would give us some
21 indication if they're isolated. So if in the case of
22 a bridge being down and we couldn't get to the plant,
23 or the primary and secondary routes were washed out,
24 or something like that.
25 CHAIRMAN SCHULTZ: Who makes the decision

about the route in between the response center and the site?

MR. BRUSH: The SAFER Control Center, their folks running that in addition to FedEx. So FedEx is getting reports all the time from their drivers. And again, we're working with the state and local folks to get updates. We've got about four hours getting the tractors to the response center, briefing the drivers on the routes they're going to drive or if we make a decision to fly. Again, because of weather conditions in between the response center and the site, we may go right to the airport and just go ahead and fly.

MEMBER STETKAR: But FedEx makes the call on the long haul, or you guys make the call on the long haul?

MR. BRUSH: We make the call.

MEMBER STETKAR: Okay.

MEMBER REMPE: Could you talk a little bit about what happens when the equipment gets to the site? In some of the background information we were given to review apparently that was a bit of an issue on how the equipment is turned over to the site personnel and the division of duties in that turnover.

MR. BRUSH: Sure. All the equipment goes

1 to normally an off-site staging area. And that was
2 described as an area about 25 miles from the site.
3 MEMBER REMPE: Yes.
4 MR. BRUSH: Some place that has the
5 capability to not only harbor all that equipment for
6 some length of time, but also to facilitate helicopter
7 operations if required so we can get the equipment onto
8 the site, not via road networks, but through the air.
9 The SAFER team provides equipment
10 operators to the staging area. The equipment
11 operators accompany the equipment to the site. When
12 the equipment and the operator get to the on-site
13 staging area, there is a training session, if you will,
14 just-in-time training, between the SAFER operator and
15 the site operator. And we go through an operator aid
16 card that comes with a piece of equipment. And then
17 the SAFER operator stays with that equipment until it
18 is hooked up to the plant and running hot and normal.
19 And then the site at their discretion lets the SAFER
20 operator go back to the off-site staging area to
21 accompany the next piece of equipment.
22 MEMBER REMPE: Okay. Thanks.
23 MR. BRUSH: Yes, sir?
24 MEMBER BROWN: I'm talking about driving
25 versus flying. And looking back at your chart, the

map, 20 hours by truck to a 30,000 mile radius, 50 miles an hour.

MR. BRUSH: Aggressive.

MEMBER BROWN: Aggressive? And there are rules in terms of how -- how many drivers does FedEx have on one of these long hauls? At least two?

MR. BRUSH: Yes.

MEMBER BROWN: Maybe three? Because there are limits on how long they can drive.

MR. BRUSH: Yes, there will be a pair of drivers coming with each tractor.

MEMBER BROWN: Still 50 miles an hour, 1,000 miles. Just looking from Phoenix up to Washington, and saying that's averaging 50, that's --

MEMBER BLEY: It's humping.

MEMBER BROWN: That's more than humping.

(Laughter)

MR. BRUSH: It is. It is. It's very aggressive. And for the Northeast in all likelihood we would probably just immediately go to fly.

MEMBER BALLINGER: It's like they've written it off, yes. Seabrook and Pilgrim.

MEMBER BROWN: Yes, I don't know what it's like on the western side. I would imagine it's a little bit easier to boogie on the western side than it is on

1 the northeastern side.

2 MR. BRUSH: But even there trying to cross

3 the Rockies with all the --

4 MEMBER BROWN: Exactly.

5 MR. BRUSH: -- trucks and traffic.

6 MEMBER BROWN: Okay. That was just

7 information. Thank you.

8 MEMBER BLEY: Before you go on, you didn't

9 talk about the helos. And I remember -- I don't know

10 if it was you or somebody else who was here; maybe it

11 was INPO, talking about during Fukushima heavy

12 equipment got shipped from around the world to Tokyo,

13 and they didn't have any capability of large enough

14 helos to move it out to the site. Where are the helos

15 coming from?

16 MR. BRUSH: Helos can come from basically

17 three different places. The SAFER team has contracted

18 with commercial helicopter companies, commercial

19 helicopter companies who typically do logging

20 operations, do fire fighting, do construction with

21 helicopter support offshore, drilling rigs.

22 MEMBER BLEY: The heavy stuff?

23 MR. BRUSH: So heavier helicopters that

24 have about an 85 to 9,000-pound external load

25 capability. And I believe I mentioned earlier, all of

1 our equipment has been spec'd out to be 8,500 pounds
2 or less.
3 MEMBER BLEY: Okay.
4 MR. BRUSH: So the large generators, the
5 large pumps. In some cases we have to pull them apart,
6 separate them from the trailer and get two loads going
7 in. Or we'll get a fuel tank in as a separate load.
8 But we can get everything under a helicopter and to the
9 site.
10 The secondary helicopter source would be
11 the Air National Guard in a certain state or in an
12 adjoining state. We already have -- the industry has
13 agreements with the states and their emergency response
14 folks to support moving people around, moving small
15 amounts of equipment around with light helicopters.
16 In Illinois for Exelon, when I talked to those guys,
17 they said we'll give you one of the governor's
18 helicopters if you need it. Now, he doesn't have any
19 capability other than personnel or some boxes of stuff,
20 but they're very serious about supporting us.
21 And then the third leg of the helicopter
22 support would be to turn to the NRC rep in the EOF. And
23 at the same time we're looking for commercial or state
24 assets. Ask them to contact DoD and begin to mobilize
25 DoD assets.

1 MEMBER BLEY: You're not the one to speak
2 to that, but do they have some agreements with DoD, or
3 is that just something that would be handled through
4 the higher levels of government?
5 MR. BRUSH: We have actually gone out and
6 we have briefed FEMA, the FAA and OSD just a couple
7 months ago on the potential for us coming to them for
8 support. And like the military always says, if they're
9 not out fighting a war, they're all over wanting to
10 help.
11 (Laughter)
12 MR. BRUSH: So I mean, when Fukushima went
13 down, we had Marines off shore on boats offering to
14 help. We had --
15 MEMBER BLEY: Had an aircraft carrier
16 out --
17 (Simultaneous speaking)
18 MR. BRUSH: -- the Air Force. Yes, the
19 Navy was there. The Air Force just off the coast was
20 offering to fly down and help support operations.
21 Military gets engaged quickly typically.
22 MR. POWELL: We have found that the
23 agencies are very easy to work with. In fact, the Air
24 National Guard went to the Phoenix facility and looked
25 at the slings and gave us feedback on the quality of

1 the slings saying we had purchased very high-quality
2 slings to lift. In one case they recommended how to
3 change the lift points on a piece of equipment and
4 they've even started bringing some of their personnel
5 in to start developing load lift plans.
6 MEMBER BLEY: Ah, okay.
7 MR. POWELL: So it's working a lot better
8 than any of us I think would have imagined. And when
9 we've had the meetings with DoD, DoE, FEMA and the FAA,
10 they've been, you know, hey, there's ways we can work
11 this and we need to put these things into play.
12 MR. BRUSH: Does that answer the question?
13 MEMBER BLEY: Yes.
14 MR. BRUSH: Okay. So we mentioned the
15 SAFER Control Center. The SAFER team works out of the
16 control center. And the primary is in Lynchburg and
17 orchestrates the entire response to the site similar
18 to an outage control center. The alternate is in
19 Birmingham.
20 And then we have the response centers.
21 Response centers store and maintain five sets of
22 generic equipment and then a number of sets of
23 site-specific equipment, some of which was mentioned
24 today. The 600-volt transformer would be a piece of
25 site-specific equipment, or an extra lift pump.

1 All of it again is loaded on commercial
2 trailers. Some of it is pre-palletized for fixed-wing
3 movement to facilitate loading an aircraft. And the
4 response centers do the testing and certification of
5 equipment as they're doing the maintenance. We do use
6 the SAFER operators to go to the staging areas to assist
7 us with maintenance and some of that testing as they're
8 training for making sure they're familiar with the
9 equipment. So that will be an ongoing process over the
10 next four years.
11 CHAIRMAN SCHULTZ: What is the expected
12 staffing for those operators?
13 MR. BRUSH: At a staging area?
14 CHAIRMAN SCHULTZ: Yes.
15 MR. BRUSH: Yes, we'll typically have four
16 or five operators and then a staging area lead.
17 CHAIRMAN SCHULTZ: Okay.
18 MEMBER CORRADINI: So let me ask a
19 different question.
20 MR. BRUSH: Yes, sir.
21 MEMBER CORRADINI: These are in operation
22 now or soon to be?
23 MR. BRUSH: The response centers are in
24 operation. We went in operation at the end of
25 September in support of those sites coming out of their

1 outages this fall.

2 MEMBER CORRADINI: So has there been, for

3 lack of a better word, a training exercise that actually

4 brought a piece of equipment to a plant?

5 MR. BRUSH: There have been a couple of

6 demonstrations, yes, sir.

7 MEMBER CORRADINI: Okay.

8 MR. BRUSH: One at Three Mile Island and

9 one at Surry.

10 MEMBER CORRADINI: Okay. Thank you.

11 MR. BRUSH: So this again is just a

12 pictorial that talks to the initial request. The

13 initial request goes to a 24/7 contact at AREVA. AREVA

14 does the dialogics call out of the entire SAFER

15 organization. They get redundant response then both

16 for the command center as well as for the response

17 centers. And we call out both response centers until

18 we make a determination which one we're going to utilize

19 to respond to this event. And you can see the people

20 in the control center there. A coordinator, a staging

21 area coordinator, a logistics guy, an equipment

22 coordinator, and then a response center coordinator.

23 MEMBER BLEY: The management and

24 operating groups are all from the contracting

25 organizations, or are there some of you folks from the

licensees or --

MR. BRUSH: They're all from AREVA.

MEMBER BLEY: All from AREVA?

MR. BRUSH: AREVA and PECO.

MEMBER BLEY: Okay.

MR. BRUSH: Correct. So here's the staging area organization. Again, we have a staging area lead. We have a number of operators that go into the staging area and they're working with the command center to get updates on equipment as they're coming in. AREVA does have access to short-haul planes, jets, that they can move their people around in response to this event to get them to an organization or to an area quickly. And then we'll rent vehicles from that area to support them while they're supporting the site.

MR. BAUER: So to answer the question about the technicians that go with the equipment, since AREVA does a lot of site support throughout the nation, they have people all over the country that they will be training. So when an event occurs, they'll contact the people and those people will arrive at the staging area simultaneously with the equipment arriving there.

CHAIRMAN SCHULTZ: They won't have far to go because they're associated with their site support team already?

1 MR. BAUER: Right, they could come from
2 any place in the country.
3 CHAIRMAN SCHULTZ: Right.
4 MR. BAUER: Whoever they have available.
5 MR. BRUSH: Which is another great point.
6 All these people are instrumental in supporting nuclear
7 outages every year, so they're familiar with our sites.
8 Maybe not all the sites, but they're familiar with how
9 we operate in the nuclear industry. They're
10 comfortable with going to a site and supporting sites.
11 This is the SAFER play book. I think you
12 saw a picture of this earlier. It does have a number
13 of chapters. And the play book is established to make
14 sure that everybody is working from the same plan. So
15 it's developed by the site in conjunction with the SAFER
16 team. The SAFER team holds a copy. INPO will hold a
17 copy. NRC will hold a copy. The EOFs at the nuclear
18 utilities will hold copies. The 1-800 number is in
19 this book, so when the site determines that they need
20 to make a call, they'll look in the book. The number
21 will be right there. There will be a sheet that they'll
22 walk down to talk to that provides specific
23 information. So it comes across the same way every
24 time.
25 MEMBER SKILLMAN: What is the

1 administrative link that gives a shift manager or a
2 shift foreman or the emergency director the confidence
3 that his senior nuclear executives bought into this so
4 that that person who's --
5 MR. BRUSH: So when he makes the call to
6 move all this equipment --
7 MEMBER SKILLMAN: He knows he's on solid
8 ground with his chief nuclear officer?
9 MR. BRUSH: We have built that requirement
10 into the EP plans for each utility, or for each site.
11 We do train down that path. As Scott mentioned, Mike
12 Pacilio was the industry lead for this effort, the Phase
13 III effort for off-site equipment. We did brief the
14 CNOs at every stage of development of the response
15 centers and their capabilities.
16 MR. BAUER: Early on we also -- there was
17 an NEI initiative that the CNOs voted on to say we would
18 all contract with SAFER. So we've all signed an
19 individual contract with SAFER to be a part of
20 their --
21 MEMBER SKILLMAN: Okay. Thank you.
22 Thanks.
23 CHAIRMAN SCHULTZ: Was your question,
24 Dick, who is the utility authority? Is that a
25 designated individual --

1 (Simultaneous speaking)

2 MR. BRUSH: It's different for each

3 utility. Some go right to the NDO and have the NDO make

4 the call, but the site truly holds the responsibility

5 for saying I'm in a world of hurt and I need extra

6 equipment.

7 MR. POWELL: In the case of Palo Verde the

8 shift manager will be in communication with the EC early

9 on in the event. He makes the call. And in fact, he

10 or she wants to make the call early enough in the event

11 to get the logistics moving. That's when T-0 starts.

12 And we're keeping that communications -- launch my play

13 book. Hang up the phone. So he goes back to focusing

14 on classification and assisting the CRS managing the

15 event.

16 MEMBER SKILLMAN: That's why I asked the

17 question, because it's command and control at the point

18 at which the individuals in the control room determine

19 I need help and I need it now. And I was really

20 processing in my mind what does it look like if that

21 person is saying, gee, I don't know if I've got to call

22 the CNO right now to get permission to do this. I

23 presume through all of the agreements that have been

24 signed that link has already been closed, but you've

25 confirmed it on the record. So that's what I wanted --

1 MR. BRUSH: Yes, exactly.

2 MEMBER STETKAR: But I was going to ask is

3 that -- Mike said that's the way it is at Palo Verde.

4 Is that uniform across the industry that the shift

5 supervisor, whatever his title is, in the control room

6 makes the call? Because Dan said EP, which tends to

7 be corporate executives and those folks who live

8 distant and --

9 MR. BRUSH: Well, it's in the EP procedure

10 for the site.

11 MEMBER STETKAR: Well, that's not -- you

12 have to be a little bit careful because that's not the

13 procedure that Mike was alluding to.

14 MR. LLEWELLYN: This is David Llewellyn

15 from Duke. At Duke the contract is already signed, so

16 it's up to the duty engineer to make that call in the

17 control room. So we don't have to get any executive

18 approval to do that.

19 MR. BRUSH: So I think it's similar across

20 the entire industry, but Bill can speak for Dominion.

21 MR. WEBSTER: At Dominion the control room

22 has the authority to make that call as well.

23 MEMBER STETKAR: Okay.

24 MR. WEBSTER: It's already been

25 pre-established.

1 MR. AMWAY: The same for Nine Mile Point.
2 MEMBER STETKAR: Thank you.
3 MR. GIDDENS: The same for Southern
4 Nuclear.
5 MEMBER STETKAR: Could you give your name,
6 please.
7 MR. GIDDENS: Yes, John Giddens, Southern
8 Nuclear.
9 MEMBER STETKAR: Thanks, John. Thank
10 you.
11 MR. BRUSH: So again, you see that we have
12 willed that responsibility down to make that call.
13 MEMBER STETKAR: That's encouraging
14 because we've heard alternating things about who makes
15 the judgment call in these situations. And at times
16 we've heard, well, that would be a corporate
17 responsibility at the emergency response center or --
18 MR. BAUER: Now, once the shift manager
19 makes the call, they'll probably turn the logistics
20 over to the logistics coordinator in the EOF to
21 basically say now you follow up with SAFER and make sure
22 they get here where you need them.
23 MR. BRUSH: But as Mike said, then the site
24 can go back to focusing on responding to their issues
25 and everything else is happening independent of them.

1 MR. POWELL: And that's exactly what will
2 happen. Once the EOF is mobilized, the logistics
3 coordinator and the EOF will take over that interface
4 with SAFER.
5 CHAIRMAN SCHULTZ: They don't get a chance
6 to intervene and negate the call, do they?
7 MR. POWELL: No.
8 MEMBER STETKAR: Okay.
9 MR. BRUSH: But they do have an
10 opportunity to interface and re-prioritize equipment.
11 They're deploying their Phase II equipment. If
12 something rolls down a hill and they lose a pump, they
13 can re-prioritize the first piece of equipment to the
14 site as that replacement pump. Or if a generator goes
15 back, they can call and get that re-prioritized. So
16 they're getting what they need up front in the delivery.
17 MR. POWELL: Or, using the example
18 presentation from Gene this morning, if they were to
19 recover off-site power and get some diesels back, they
20 would say, all right, hey, tell SAFER to hold off on
21 the equipment. I've recovered off-site power. Right
22 now maybe get it half way here and we'll talk about it,
23 or you can turn the shipment around. I mean, it depends
24 on the extent of the event and what they're dealing
25 with, but once that phone call is made, every plant

1 wants that equipment rolling whether it's on a plane
2 or on a truck.
3 MEMBER RYAN: Just a quick question about
4 your work force. Do you draw on European countries for
5 workers on any of these projects, or is it strictly a
6 U.S.-based work force?
7 MR. BRUSH: It's typically a U.S.-based
8 work force.
9 MEMBER RYAN: The reason I ask is because
10 they have different dose limits and it would be kind
11 of a harder thing to integrate. Two versus five rem
12 is the limit. So just curious.
13 MR. BAUER: Sure. On the issue of sharing
14 personnel, the reason INPO has a copy of this book; and
15 INPO would be contacted initially, they're going to
16 help with logistics of people. So if a plant needs
17 extra RP techs or certain skill sets, INPO is going to
18 go and find those folks for us and direct them to the
19 site.
20 MR. BRUSH: Okay. Just one last thing on
21 the play book here, this is accomplished with a site
22 visit from the SAFER team. They sit down with the
23 leadership team at the site and talk through what the
24 impacts of calling equipment out and delivering
25 equipment, what Phase III really means. They do

1 walkdowns of the site. They drive primary and
2 alternate routes into the site. They look at bridges.
3 And then they go and walk down the staging areas and
4 make sure the staging areas are adequate to support what
5 we need, the lay-down areas. And as was mentioned this
6 morning, typically it's a local air field that has
7 enough tarmac to support parking trucks and equipment
8 and also good enough to support helicopter operations,
9 if in fact we have to do that. Okay.
10 Response center equipment. I already talked about
11 five sets of generic equipment. Four sets
12 are always available at each response center to be
13 deployed.
14 One set nominally is in maintenance at any
15 given time and we rotate equipment through.
16 The sites have identified beyond the
17 generic equipment -- and "generic" is defined as more
18 than 70-percent of the sites needed a specific piece
19 of equipment. So all the pumps are for the most part
20 generic. The two generators are generic. We have
21 extra generators that are site-specific, since the site
22 called for more than a couple generators that would
23 normally come as part of the generic site.
24 The equipment is maintained by the
25 response center staff, the staging area operators and

1 contractors as necessary.

2 We talked about the weight limit.

3 The helicopters, commercial helicopters

4 have about a 70-mile round trip capability with this

5 8,000 to 8,500 load underneath it. The military

6 helicopters have a lot more robust capability.

7 Obviously depending on the helicopters you get it's a

8 much better lift capability with much longer legs. The

9 military comes with night vision capability and

10 all-weather flying capability. So that's a very

11 attractive alternative for what could be a bad weather

12 situation.

13 All the equipment will run on diesel. And

14 as was mentioned, it's all tier 2 or tier 3 diesel

15 engines, so we're not having to deal with ultra-low

16 sulfur fuel.

17 And as you've seen, we do have industry

18 standard electrical and mechanical connections to

19 ensure that when a piece of equipment shows up it truly

20 is a plug and play to replace the Phase II equipment.

21 This is the current list of equipment, both

22 generic and site-specific. We tried to do as much

23 commercial off-the-shelf equipment as we could, and we

24 were pretty successful with that. We had to do some

25 tweaking to get under the 8,500-pound weight limit with

1 the equipment. We did three industry surveys to
2 determine what equipment was going to be required. One
3 at the very beginning before the sites had produced
4 their integrated plan for the FLEX response, one survey
5 in March after they had produced their integrated plan,
6 and then one in July of '13 to verify the equipment that
7 we had selected, the types of equipment we had selected
8 were in fact going to satisfy everybody's plan.
9 MEMBER STETKAR: I look at that stuff and
10 the only thing that strikes me is that's a pretty wimpy
11 high-pressure pump. I mean, I look at the other
12 low-pressure pumps -- and I'm assuming that came out
13 of the industry specifications. I'm curious. Why?
14 I mean, why not 300, 400, 500 gpm at high pressure?
15 MR. BRUSH: It met the requirements of the
16 industry for their coping requirements.
17 MEMBER STETKAR: Under whatever
18 presumptions they --
19 (Simultaneous speaking)
20 MR. BRUSH: It didn't make sense to
21 over-buy. It made -- go ahead, Phil.
22 MR. AMWAY: This is Phil Amway. Just to
23 talk to that, the high-pressure pump with a
24 60-gallon- per-minute flow is primarily for the
25 pressurized water reactors that are just dealing with

1 the seal leakage. And it's not accounting for boil
2 off. It's just leakage from the RCS while they're at
3 high pressure. And that's all they should need is up
4 to 60 gpm.
5 MEMBER STETKAR: I understand that
6 assumed event trajectory. What I'm asking is that if
7 I look at the other makeup requirements and think of
8 reactors and the amount to refill reactors and the
9 amount to take away heat, 60 gpm at high pressure
10 doesn't do much except make up for seal leakage, which
11 is fine if that's the event scenario. You're on a
12 trajectory. If you're at a larger leakage rate at high
13 pressure, you're not going to make it. In other words,
14 I see a lot of margin in all of those low, medium steam
15 generator makeup pumps compared to the way plants
16 really work. I don't see a lot of margin in the high
17 pressure.
18 MR. FORD: Bryan Ford with Entergy. I
19 actually had asked a similar question when I saw it.
20 What I was told was that as you go to the higher flow
21 rates, it just becomes so hard to deploy. For the
22 high-pressure hoses and stuff you have to deploy, the
23 weight gets so much. They were trying to optimize
24 deployment also.
25 MEMBER STETKAR: Okay. So there are

1 things we can mitigate and things maybe we can't
2 mitigate.
3 MEMBER BALLINGER: Now when you say
4 "turbine generator," you mean that?
5 MR. BRUSH: Yes, it actually has a turbine
6 engine that drives the generator.
7 MR. POWELL: It runs on diesel.
8 MR. BRUSH: I'm sorry?
9 MR. POWELL: It runs on any type of fuel.
10 MR. BRUSH: It runs on any fuel. It's a
11 multi-fuel turbine.
12 MEMBER BALLINGER: Okay.
13 MR. POWELL: Kerosene, mineral oil,
14 vegetable oil. If it burns, it will run it.
15 MR. BRUSH: And the turbines we're using
16 are all rebuilt. They've been in the industry for
17 years. Have, I don't know, 15 to 17 million hours of
18 operating time.
19 MR. POWELL: It's a T-53 helicopter
20 turbine.
21 MEMBER SKILLMAN: I have a curiosity
22 question. I understand the equipment. in my
23 experience one thing that took everybody by surprise
24 was the need for more shielding. And I guess the
25 presumption is this is simply equipment to take care

of an extended loss of AC power, but I'm sure --

MR. BRUSH: And/or the loss of the ultimate heat sink, yes, sir.

MEMBER SKILLMAN: And the loss of the ultimate heat sink. But more shielding is better than less shielding. And I know at TMI we got our shielding from Admiral Rickover. He sent a C-5A filled with it -- is how we took care of it. Different issue, but there will be times when to get to where you want to get to you probably need to build yourself protection. Was there any consideration given to needing shielding?

MR. POWELL: Our philosophy going in we're preventing core damage, not mitigating core damage. We're preventing core damage. So shielding was something that would be needed if we failed in that mission.

MEMBER SKILLMAN: So the presumption is you really don't need any because you have prevented a radiological event?

MR. POWELL: That's right.

MEMBER SKILLMAN: Fair enough.

MR. BRUSH: And most of this equipment is hooked up outside the plant proper --

MEMBER SKILLMAN: Yes, fair enough.

MR. BRUSH: -- and it doesn't have to go

1 inside the plant.

2 MEMBER SKILLMAN: Okay. Thanks.

3 MR. POWELL: Now if additional shielding

4 was needed, we would rely on going to INPO to contact

5 other utilities to get those resources for us.

6 MR. BRUSH: And there is an agreement

7 between all the CNOs that say if you're in a bad

8 situation, we will support you.

9 MEMBER RYAN: Have you defined that break

10 point technically in terms of these issues of how much

11 of a release is more than you can handle? I would want

12 to know where that bar is before I start saying I'm going

13 to cover that. How do you --

14 (Simultaneous speaking)

15 MR. BRUSH: As far as --

16 MEMBER RYAN: Well, you said you can

17 handle events up to certain sizes or certain release

18 rates or certain parameters of some kind. How do you

19 know when you get to that point what's above that? I

20 mean, how do you decide, no, we can't handle this one?

21 It's not within our wheel house or it is.

22 MR. POWELL: I think from our perspective

23 we're deploying the equipment and connecting it to a

24 plant long before a release rate happens.

25 MEMBER RYAN: So the amount of

1 radiological release that you would tolerate in order
2 to have you deploy would be fairly low? Is that what
3 you're saying?
4 MR. POWELL: Yes, we're keeping
5 sufficient water inventories in the core to prevent
6 core damage, and the timelines are based on that.
7 MEMBER STETKAR: This is not severe
8 accident mitigation. It's core damage prevention.
9 MR. POWELL: It'd core damage prevention,
10 yes, sir.
11 MEMBER RYAN: Okay. Fair enough.
12 MEMBER SKILLMAN: It's EA-12-049, which
13 is really --
14 MR. BAUER: So the one thing I would say
15 to that is all the U.S. CNOs went over to Japan and then
16 they just recently had all the Japanese CNOs in Phoenix
17 for a week And basically one of the messages that our
18 CNOs are trying to send is we meet four times a year,
19 we're a tight-knit group, we basically -- if a problems
20 happens at one of our plants, it's at all of our plants,
21 and therefore we're all in line to help you. So I think
22 we would have plenty of help offered up at a --
23 (Simultaneous speaking)
24 MEMBER RYAN: Oh, help is not the problem.
25 What I'm trying to understand a little bit is where are

1 the go and no-go criteria of what you're going to do
2 and how you're going to do it, and when do you ask?
3 MR. BAUER: I think the sequence is you're
4 going to move from your FLEX Support Guidelines, like
5 Gene was talking about, and if things start going worse,
6 you move to your SAMGs and you're going to activate
7 other levels of --
8 MEMBER RYAN: All right. Fair enough.
9 I've got a better picture. Thank you. That's
10 helpful.
11 MR. BRUSH: So just the last comment on
12 this slide. This isn't necessarily the end-all for the
13 equipment. If a site decides three years from now they
14 need to modify their coping strategy and need a
15 different piece of equipment, then we'll form an
16 Equipment Committee and go out and purchase that piece
17 of equipment. Or if a technology changes and there's
18 a better technology to satisfy a requirement we'll go
19 after a different technology.
20 MEMBER STETKAR: On the site-specific
21 stuff they just pay the rent and maintenance costs for
22 their own --
23 MR. BRUSH: They do buy a certain amount
24 of pieces of the equipment to satisfy their
25 requirement. And whoever else joins that Equipment

1 Committee --

2 MEMBER STETKAR: Yes, okay.

3 MR. BRUSH: And then, yes, they pay an

4 annual cost for maintenance and storage.

5 Okay. Talk briefly about transportation.

6 We have teamed with FedEx Custom Critical for the ground

7 and the fixed-wing movement of the equipment. Custom

8 Critical already delivers to nuclear sites. FedEx

9 does deliveries every day just about in some way, shape

10 or form to a nuclear site. They also had airplanes in

11 the air within hours after 9/11 flying. So they are

12 used to flying in extremis and used to driving onto

13 nuclear sites. So pushback from drivers would be

14 minimal in this situation.

15 We talked about the three-tiered

16 helicopter availability. Again, the first level is to

17 contract out or call commercial helicopters and

18 determine their availability to support a requirement.

19 And that's driven by a couple of things: They're

20 obviously in the business to employ their helicopters

21 full time, make as much money as they can and probably

22 not going to stop a money-paying contract to support

23 us unless there's some national declaration.

24 The other thing is the legs. Typically

25 commercial helicopters don't fly at night and they

1 don't fly in all weather, so they're fair weather
2 daylight operations. And most of them are located in
3 the northwest, so getting a commercial helicopter from
4 the northwest to Florida doesn't happen inside of 24
5 hours. Rather, it's 48 or 72 hours to get that
6 helicopter to self-deploy. So again, going out to the
7 states and getting Air National Guard assets or turning
8 to DoD to mobilize their assets becomes a very
9 attractive proposition for us.
10 MR. POWELL: And he one thing I forgot to
11 mention earlier when I talked about this, I left out
12 the Nuclear Regulatory Commission has been involved in
13 all these meetings as well when we've met with the FAA.
14 So it's been a total integrated approach.
15 MR. BRUSH: So for the helicopters it's a
16 simultaneous call out: commercial, Air National Guard
17 and DoD through the NRC and FEMA. We are preparing
18 congested area flight plans for all the sites.
19 Typically when you do external loads you don't like
20 flying over houses or other areas where people
21 congregate, so we look for roads where there won't be
22 a lot of traffic or rivers to fly down in case something
23 happens and we have to drop a load.
24 MEMBER STETKAR: Dan, just something I
25 thought. As Dennis mentioned earlier this morning,

1 these events in practice that are going to mobilize
2 these things are not your plain vanilla clean losses
3 of electric power. It's going to be a mess around the
4 site and most of the folks are going to be headed away
5 from the site and trying to get away from the mess.
6 Have you coordinated the fact that you're going
7 opposite perhaps a large flow of traffic coming at you
8 for -- the populace trying to get away from where the
9 mess occurred?
10 MR. BRUSH: Sure.
11 MEMBER STETKAR: And it isn't necessarily
12 just the nuclear mess. It's perhaps seismic
13 destruction. It could be very, very heavy
14 storm-related destruction. It could be -- you know,
15 you name it.
16 MR. BRUSH: We'll have to work with the
17 state police and the local support agencies to clear
18 paths or hold paths open for us so that we --
19 MEMBER STETKAR: I mean, this does get
20 involved with not only the site emergency plans but the
21 general --
22 MR. BRUSH: Correct.
23 MEMBER STETKAR: -- emergency plans with
24 those agencies. You haven't done that yet?
25 MR. BRUSH: We have MOUs with the local

1 facilities and authorities, and we have MOUs with the
2 states.
3 MR. BAUER: Yes, the plants have met with
4 their state and county officials to basically talk this
5 through and talk through what assistance they would
6 need.
7 MR. BRUSH: They ask for escorts and for
8 clearing paths into the site --
9 (Simultaneous speaking)
10 MEMBER STETKAR: No, I understand. I'm
11 thinking of that last; pick a number, 20, 25 miles from
12 the staging area --
13 MR. BRUSH: Exactly.
14 MEMBER STETKAR: -- until the time you put
15 it in a place where it can get connected. And I guess
16 I'm having a little less confidence in the helicopters
17 because I don't hear really strong-knit agreements for
18 availability necessarily, so now I'm starting to think
19 about trucks and roads and that sort of thing.
20 MR. BRUSH: Well, we've got 24 hours --
21 MEMBER STETKAR: Yes.
22 MR. BRUSH: -- to coordinate with the
23 state officials to isolate routes so that -- and again,
24 we've already pre-identified primary and secondary
25 routes into the sites and those are coordinated with

1 the state and local agencies to make sure that they know
2 that the paths we want to take to get equipment in.
3 MEMBER RYAN: Dan, have you all done a live
4 drill of any of that?
5 MR. BRUSH: We --
6 MEMBER RYAN: A real-life drill where you
7 shut the roads off and the crews come through with the
8 equipment and all that and everybody else can't go on
9 those roads?
10 MR. BRUSH: We have not.
11 MEMBER RYAN: What?
12 MR. BRUSH: We have not.
13 MEMBER RYAN: Because I think those
14 exercises, in my experience, if you actually do the real
15 thing, or as close to it as you can get, they're are
16 very instructive on whether it will work or -- I think
17 that's kind of what --
18 (Simultaneous speaking)
19 MR. BRUSH: Well, we did a couple of
20 demonstrations and we did have state and local --
21 MEMBER RYAN: A demonstration is not a
22 drill.
23 MR. BRUSH: Correct.
24 MEMBER RYAN: Big difference. A
25 demonstration is you take the shiny one and show it off

1 and it's working good and everything is great. A drill
2 is everybody is doing what they normally would do and
3 nobody's watching. So it's a big difference.
4 MR. BRUSH: Understand.
5 MEMBER RYAN: Okay.
6 MEMBER BALLINGER: It seems to me that the
7 most likely bad path would be the roads because of all
8 the things that John was talking about and that the sure
9 path is with the helicopters, but it also --
10 MEMBER STETKAR: Why?
11 MEMBER BALLINGER: -- seems to me that
12 the -- well, because that sidesteps everything, right?
13 In other words --
14 (Simultaneous speaking)
15 MEMBER STETKAR: It depends on the
16 weather.
17 MEMBER BALLINGER: Okay. All right.
18 Okay.
19 MR. BRUSH: So it really is
20 situation-dependent.
21 MEMBER BLEY: Since you brought this up,
22 I haven't thought much about it, but as far as I know
23 all the counties and states around the plants have
24 emergency plans. And is this getting worked into their
25 plans or is --

1 MR. BRUSH: Yes, we're doing that now. In
2 fact, we have standing Memorandums of Understanding and
3 Agreement with the state and locals already.
4 MEMBER BLEY: Right.
5 MR. BRUSH: So all we're doing is building
6 on those existing plans and making sure that --
7 MEMBER STETKAR: The only key is though if
8 you tell the state organizations that I have a problem
9 in isolation at the nuclear facility and I want a plan
10 to get equipment there, that's one way that they think.
11 If you say that I've had the biggest earthquake that's
12 ever occurred in this area, or a line of the worst
13 tornadoes that have come through and devastated a city,
14 and now how do I coordinate getting things to the
15 nuclear plant, you might get a different answer.
16 Follow me? When you say I've coordinated it with the
17 local emergency response organizations, have you done
18 a clean coordination? In other words, this is the only
19 concern that we have today.
20 MR. BRUSH: It's a primary concern that
21 the state and local organizations understand that they
22 could be in a massive response to an event. The last
23 thing they want is for a nuclear site to have a bad day
24 on top of that massive event. And everybody I've
25 talked to anyway has voiced a very high concern about

1 we're not going to be the only people holding our hand
2 up asking for help, but they understand that if they
3 don't support us, it could go into a bad situation very
4 quickly.
5 MR. POWELL: I can tell you for the State
6 of Arizona; and I think you'll hear similar stories from
7 the fall '14 implementing plants, we've met with the
8 state agencies, the local police and then cascading out
9 with the state police, all the emergency response
10 areas. We've talked through the response planner.
11 Dan referred to it as the play book. We talked about
12 the three-tiered approach to helicopters.
13 In the case of Arizona it was all very positive.
14 And we talked about how we would reroute traffic and
15 whose responsibility? And there's an incident command
16 structure that the states will implement. And there's
17 a clear hierarchy. And then that person is in charge
18 of routing traffic through the state and getting the
19 equipment around. So that group would determine
20 whether a truck comes in on Interstate 10 or through
21 Interstate 40, or maybe it has to go around and come
22 in a different direction.
23 They've reviewed all their emergency
24 response plans in the State of Arizona and in fact the
25 state found that in one case they needed to add two words

1 to the plan to clarify use of helicopters for people
2 and equipment. They identified the change on a
3 Thursday -- or a Friday afternoon and the change was
4 effective on Tuesday morning. And I think you'll hear
5 similar stories from the other states that have
6 implemented.
7 Going back, we haven't drilled this on this
8 level, particularly in the states, but they're all
9 aware of what their roles are and their need to support.
10 In fact, we are scheduled to have another series of
11 meetings to go through this, through the response plan
12 again. And it's all been very positive. We've had all
13 members of horizontal local law enforcement, the
14 National Guard, the governor's office all involved, the
15 site emergency, the -- I mean, the state, the county
16 emergency directors. And I think Dan's got similar
17 stories for the meetings he's had with his states.
18 MR. BRUSH: So in fact, the states want to
19 start incorporating some of these into their exercises
20 voiced by Illinois, Tennessee, Arizona, those meetings
21 that I've sat in. We've got language in Pennsylvania
22 and Maryland. We missed the opportunity in New Jersey.
23 They've got our requirements. They'll change the
24 language in their emergency plans next year when it
25 comes around. So we are working through just about all

1 the states.

2 MEMBER BLEY: I think we've crossed a

3 little threshold here as we're talking about this, from

4 what we talked about earlier. What we, at least a

5 couple of us over here, were worried about this morning

6 is the most likely thing to get you into this ELAP is

7 some severe common cause event, some big storm, some

8 big earthquake. But the things that might activate the

9 center are much more broad than that. TMI would have

10 probably gone to this place. And so there's a whole

11 range of situations beyond the ELAP kind of thing where

12 this will be very helpful where you don't have that

13 confounding problem of the local damage.

14 MR. POWELL: You know, hypothetically a

15 company, or a coastal, if they know a hurricane is

16 coming, might elect to say I'm not happy with the

17 equipment being this far away. Move it half way

18 here --

19 MEMBER BLEY: Half way here, yes.

20 MR. POWELL: -- and find a safe place.

21 And they might have that dialogue and do that and reduce

22 that risk to their plant.

23 MR. BAUER: One of the other things is that

24 every plant has least 100 percent margin on the

25 24-hours. So they don't need it for 48. So we have

1 quite a bit of margin to work with on the delivery time
2 frame.
3 MEMBER SKILLMAN: So we've talked about
4 tractor-trailer. We've talked about helicopter.
5 Soon we're going to be talking about flooding, maybe
6 subsequently dam failure. Some plants are fairly
7 close to their design-basis in terms of flooding. Is
8 there any consideration to having to bring equipment
9 in by barge? I think folks from Fort Calhoun might have
10 said, gee, it really would have been nice if somebody
11 brought a medium-sized barge with a couple of backup
12 pumps or something just in case we needed them.
13 MR. BRUSH: Yes, when we met with DoD we talked
14 about using air-cushioned landing craft --
15 MEMBER SKILLMAN: Oh, yes. Watercraft?
16 MR. BRUSH: -- where they're available.
17 They're not available all over, but there are
18 situations where that would be very attractive. We
19 have talked about using barges for a site that was
20 isolated at Salem-Hope Creek. It was isolated by
21 water. And we would like to do it by helicopter. It
22 seems to be the fastest approach. There's a lot of
23 things you have to do with barges to make sure that
24 you've got a place where you can land the barge and
25 safely off-load the equipment.

1 MEMBER SKILLMAN: And you need a tow boat
2 or something, a pusher to get it there.
3 MR. BRUSH: Or use a ferry or something.
4 Yes, sir.
5 MEMBER SKILLMAN: So is it fair to
6 communicate that when and if necessary access by
7 watercraft will be considered, or is that a stretch at
8 this point?
9 MR. BRUSH: I don't think that's in our
10 plans right now. I think we have discussed that,
11 discussed the requirement for a water-born isolation.
12 And if we couldn't get in by helicopter what we would
13 have to do.
14 MEMBER SKILLMAN: Fair enough. Thank
15 you.
16 MR. POWELL: I'd like to real quickly
17 build on something Scott said going back to Gene's
18 presentation of Palo Verde this morning. The need for
19 a piece of Phase III equipment, what would have to
20 happen is if he powered up the 480-volt bus, the Alpha
21 bus, that gives us access to the Alpha or Echo charging
22 pump. I would have to have both pieces of permanent
23 plant equipment fail, then the end pump and the plus
24 one pump before I even needed the first piece of Phase
25 III equipment. So it truly is the Phase III

1 defense-in-depth equipment.

2 MR. BAUER: There are a few plants however

3 that do have equipment coming from the National SAFER

4 Response Center that is required for them to cope.

5 There are a few.

6 MR. BRUSH: Okay. This is a depiction of

7 a checklist that is done to declare a site operational

8 and be able to be supported by the response center.

9 This checklist is done trading documents between the

10 site and the response center personnel. So you run

11 down the list here of we have a lot of generic equipment

12 required. It's all under into maintenance. And we've

13 got non-generic or site-specific equipment. What's

14 required. We've got a team that's trained up. We have

15 the response plan or the play book developed.

16 Congested area flight plan is completed. Training in

17 place. All those have to be accepted by both entities

18 to declare it operational. This checklist is held at

19 the SAFER centers and reviewed every year.

20 Okay. That's all the primary stuff.

21 CHAIRMAN SCHULTZ: Any questions that

22 might get us into the additional materials from the

23 Committee?

24 (No audible response)

25 CHAIRMAN SCHULTZ: Okay. Scott, that

1 completes your set of presentations.

2 MEMBER BLEY: Yes, I guess I do have one.

3 CHAIRMAN SCHULTZ: Go ahead, Dennis,

4 then.

5 MEMBER BLEY: I think what you said, Dan,

6 was you went operational in September for the plants

7 who have just come out of outages.

8 MR. BRUSH: And the plants that were going

9 into outages in the fall and needed to have the response

10 center to support the Phase III portion of their FLEX

11 strategy, their coping strategy. Yes, sir.

12 MEMBER BLEY: When will it be operational

13 for everybody?

14 MR. BRUSH: At the end of 2016.

15 MEMBER BLEY: '16?

16 MR. BRUSH: Yes, so we're working right

17 now on spring of '15 plants --

18 MEMBER BLEY: Okay.

19 MR. BRUSH: -- to make sure that their play

20 books are completed and signed off. We already know

21 the equipment is in place. We know we have the training

22 completed. We'll have congested area flight plans by

23 the end of this year for all sites. So we're out ahead

24 of that game, but the play book development is really

25 the thing that takes the time, to visit the site, to

walk down all the areas, drive all the roads.

MEMBER BLEY: Rather than me make an assumption, I will ask you what if a plant who doesn't have their play book yet has the bad event tomorrow and says, hey, I need help? Is there a way to handle that?

MR. BRUSH: It would be a generic deployment, yes. They'd call up the 1-800 number and --

(Simultaneous speaking)

MEMBER BLEY: -- everybody now in some fashion?

MR. BRUSH: Yes, almost every site has identified at least one staging area off site, and in most cases two.

MEMBER BLEY: Is all the equipment at the --

(Simultaneous speaking)

MR. BRUSH: All the equipment is at the response centers now. We have slings for the equipment. Again, it's mobile loaded on trailers. So we're able to go if a site, a 2016 site were to have an incident, we could deploy to support that site.

MEMBER BLEY: It might take a little bit longer, but it would still be --

MR. BRUSH: Well, it would just --

1 MR. BAUER: Whether they have the
2 connections to put the equipment --
3 (Simultaneous speaking)
4 MEMBER BLEY: Yes, that's right.
5 MR. BAUER: I mean, they not even have
6 their Phase II equipment on site yet, but they
7 personally are buying for their site. So we could get
8 there with a set of equipment.
9 MEMBER BLEY: Stuff they couldn't use.
10 (Laughter)
11 CHAIRMAN SCHULTZ: It would be
12 coordinated appropriately, for sure.
13 MR. BAUER: Right. Yes. When we opened
14 those Phoenix response center, FEMA came and was part
15 of the opening ceremonies and they were very interested
16 in the capability that was demonstrated there.
17 CHAIRMAN SCHULTZ: Bill Shack, do you have
18 any questions of this group at this point?
19 (No audible response)
20 CHAIRMAN SCHULTZ: Hearing none --
21 CONSULTANT SHACK: No, I don't.
22 CHAIRMAN SCHULTZ: Okay, Bill. Thank
23 you.
24 (Simultaneous speaking)
25 CONSULTANT SHACK: -- presentation

1 though.

2 CHAIRMAN SCHULTZ: Thank you.

3 MR. BRUSH: Thank you.

4 CHAIRMAN SCHULTZ: Any other comments or

5 questions by the Committee at this point?

6 (No audible response)

7 CHAIRMAN SCHULTZ: All right. We're

8 going to change out the industry presenters with the

9 NRC staff.

10 PARTICIPANT: Does the gentleman have --

11 (Simultaneous speaking)

12 CHAIRMAN SCHULTZ: Oh, excuse me. A

13 comment.

14 MR. GIDDENS: That's okay. This is John

15 Giddens with Southern Nuclear.

16 Dan, I was going to tell you that since the

17 ACRS has already said they're going to be in Phoenix

18 in May, that you might extend an invitation to them

19 where we could facilitate a -- if they'd like to go to

20 the --

21 MR. BRUSH: Response center?

22 MR. GIDDENS: -- response center.

23 MEMBER STETKAR: I told you they hadn't

24 heard of it.

25 MR. BRUSH: I think we already have that

in the works.

MR. GIDDENS: Okay. Thank you.

MR. POWELL: Actually, the staff through Jeremy Bowen has been in contact with APS and we've got dates. And we've already contacted the response center to make those arrangements. So great idea, John.

(Laughter)

CHAIRMAN SCHULTZ: To expand that, our visit will be to the site, to the center and also to the region.

So thank you very much. We appreciate it. Very good presentations.

While the NRC staff is coming to the front of the room, I'm going to ask if there are any public comments. And we have a short time here just while we make the transition. If there are any members of the public in the room who would like to make a comment based on what we've heard so far, now would be the time to do so. If we can get the phone line open, we'll also ask on the bridge line.

(No audible response)

CHAIRMAN SCHULTZ: I'm not seeing anyone coming to the microphone in the room here. We'll have another opportunity later on today.

1 I believe the phone line is open. And for
2 our purposes we need to identify that someone is out
3 on the phone line. Could someone please indicate that
4 they are there just by saying words, and then we'll know
5 the phone line is open.
6 MR. JACKSON: Yes, Tom Jackson with Rizzo
7 Associates.
8 CHAIRMAN SCHULTZ: Tom, thank you.
9 Now, if anyone would like to make a
10 comment, please state your name and provide the comment
11 to us.
12 (No audible response)
13 CHAIRMAN SCHULTZ: I'm not hearing any at
14 this time, so we'll go ahead and close the phone line
15 on public comments and it will, as I mentioned, be
16 opened later today.
17 And as that is closing, Jack, I believe
18 you've got to coordinate the presentation here.
19 MR. DAVIS: I am.
20 CHAIRMAN SCHULTZ: Is that correct?
21 MR. DAVIS: Yes, I am.
22 CHAIRMAN SCHULTZ: So welcome and we look
23 forward to your presentation. You're going to be
24 telling us what you've learned from the industry's
25 overall program and the reviews that you have done.

1 MR. DAVIS: Yes, correct. So I'm Jack
2 Davis. I'm director of the Division of Japan Lessons
3 Learned, just doing this for NRR and a lot of it for
4 the Agency. I apologize I wasn't here this morning's
5 session because I had a couple of conflicting meetings,
6 but I heard it was a very fruitful discussion.
7 So for this afternoon's discussion we're
8 going to spend a good amount of time talking about NRC's
9 review of the order and our methodology, how we're going
10 through that. And then we also have some staff here
11 that's going to talk to you about specific issues that
12 the Committee had told us they were interested in
13 related to this area.
14 Following the previous discussion, I think
15 it's important to reemphasize that the mitigation
16 strategy order is on the prevention of core damage.
17 It's not about post-core-damage-type of issues, and
18 it's for beyond-design-basis-type of natural
19 phenomenon. And you're going to see that theme
20 throughout all of our discussions and out methodologies
21 that we're talking about here today.
22 If I can have the next slide? Thanks,
23 Jeremy.
24 This slide demonstrates the Tier 1. I
25 know it's very busy and it's not meant to be looked at

1 in great detail. It displays the activities that are
2 going on in Tier 1 for Fukushima. There are a number
3 of parallel activities. The real point of this is that
4 we got that it's an integrated-type of an approach and
5 that all of these pieces have to fit together so that
6 you have at the end of the day a logical consistent and
7 robust regulatory framework. And we're trying to
8 achieve that in a lot of the things particularly related
9 to flooding and some of the other activities. We're
10 doing a parallel activity and then they're going to fit
11 into the mitigation strategies.
12 One last item I'm going to mention before
13 I turn it over to Jeremy to go through the presentation
14 is that we're here today to talk about operating
15 reactors, but we recognize that in NRO they're also
16 looking at new reactors and what goes on there. So we
17 maintain very close coordination with them. There are
18 some differences between what they do and what we do,
19 but we understand why there are differences or in some
20 cases similarities. And there are reps here from NRO
21 that can help us answer any of the questions you have
22 that might cross over those boundaries.
23 So with that, I'm going to turn it over to
24 Jeremy who's going to walk us through it in more detail.
25 MR. BOWEN: Okay. Good afternoon. Like

1 Jack said, I'm Jeremy Bowen. So I'm currently one of
2 the associate directors in the Japan Lessons Learned
3 Division. I've been involved with this for about a
4 year-and-a-half. I got involved as the branch chief
5 for the management of the overall project for how we
6 were conducting the reviews. So I'm going to start
7 with this kind of walk-through at a high level, how
8 we've reviewed once the licensee has submitted their
9 integrated plans how we conducted their reviews and how
10 we got to where we are today, and our plans for final
11 close-out of the order.
12 So to start with, again, just a quick
13 overview of the order. We've talked about this on the
14 edges so far today, but the order is a performance-based
15 order. It's trying to prevent core damage for
16 undefined beyond-design-basis external events. The
17 order talks about -- you see the terminology that's used
18 there: initial, transition and final. And what that
19 basically means is the licensee is using installed
20 plant equipment, portable on-site equipment and then
21 resources from off site.
22 And this is a cartoon diagram that we've
23 put on our public Web site to kind of communicate to
24 all of our external stakeholders exactly that sort of
25 wording in a pictorial format, if you will.

1 So some milestones. The first responses
2 were due in February of 2013. Licensees submitted
3 their integrated plans, and it basically laid out how
4 they were going to comply with the order. The
5 compliance for the order is two refueling cycle outages
6 after the submittal of that integrated plan with a final
7 compliance date no later than December 31st, 2016.
8 I will note here that some licensees have
9 requested some schedule relaxation, and the Agency has
10 granted some relaxations. Those have varied for one
11 reason or another. For the most part it's to make some
12 modifications to the plants to enhance their capability
13 to respond to any such event. And the relaxations kind
14 of fall into three different categories: One is for
15 an additional outage prior to December 2016. That
16 grants them three refueling cycles instead of two.
17 The second category has been the plants
18 that are decommissioning. There obviously wouldn't
19 have to be concern about the core cooling since they
20 would have no fuel in the core.
21 And then third has been an alignment with
22 the Severe Accident and Capable Hardened Vent Order.
23 And the reason for that is that certain plants need the
24 venting capability that that order requires in order
25 to implement the strategies to comply with this order,

1 Order 049. However, in all of those cases the plants
2 that have been granted that extension, the additional
3 modifications minus the vent modification, additional
4 modifications and the portable on-site equipment will
5 all be available and completed on our normal timeline,
6 the original timeline identified for the Mitigating
7 Strategies Order.
8 CHAIRMAN SCHULTZ: Jeremy, can you give a
9 rough number of plants that are affected in that way
10 besides the decommissioning facilities?
11 MR. BOWEN: Sure. For the additional
12 outage prior to 2016 there are 10 units that were
13 granted a third outage. And to align with the Hardened
14 Vents Order it was six sites, so in that case 10 units
15 as well.
16 CHAIRMAN SCHULTZ: All right. Thank you.
17 MR. BOWEN: Okay. So as I mentioned, the
18 goal of the order is prevention of core damage, and it's
19 to prevent that in a beyond-design-basis external
20 event. And it's an undefined event. It's a very
21 performance-based order. And so to try and; for lack
22 of a better way of saying it, define the undefinable,
23 industry proposed to use what they call their
24 flexible -- FLEX as we now refer to it, the Diverse and
25 Flexible Coping Strategies. And they provided an

1 Industry Guidance document, NEI-12-06. That defined
2 the undefinable by establishing the initial parameters
3 that were discussed this morning, the extended loss of
4 AC power and the loss of access to the ultimate heat
5 sink.
6 To be honest, that has been a challenge for
7 the staff's review. How far down do we go with this
8 review? How do we try and bound this undefinable
9 event? How do we bound our review? As you all have
10 noted, there's been many of the questions that this
11 Committee has asked that we were asking ourselves
12 during the review. And there was lots of questions
13 about, well, there's recognition that some event
14 happened that got you into these initial conditions,
15 so you have to consider, well, what equipment would be
16 available? What equipment would be impacted if you had
17 this sort of event vice this sort of event? And every
18 time we asked the question, there was a lot of because
19 of the performance-based nature of the order, we had
20 to define or try and figure out what's the right
21 threshold for how many times to ask a question to get
22 to a level of comfort?
23 To do our review we've had staff that are
24 experts in many different technical areas specific to
25 containment and ventilation, electrical,

1 instrumentation and controls, but at the same time we
2 also focused on having a lot of staff with a lot of
3 operational background and a lot of operational
4 experience. We really focused our review on paying
5 significant attention to the integrative plant
6 response, trying to figure out from the broad sense of
7 this undefined external event. Is a strategy feasible
8 and can it logically be executed given the unknowns that
9 are likely to be facing the plant.
10 And in the case, if I will, the flexibility
11 and the diversity that industry proposed, as we've gone
12 through our review over the past year-and-a-half I
13 think we've come to see that that really is the key to
14 success.
15 Jim Wiggins, the director of NSIR, has
16 mentioned a couple of times that after TMI we went to
17 a symptom-based approach for the emergency operating
18 procedures and that he views this as the equivalent
19 symptom-based approach from a mechanical standpoint
20 post-Fukushima. That really is the case that we're
21 seeing is there isn't one specific you're going to do
22 this strategy because you have an extended loss of AC
23 power and loss of access to the ultimate heat sink.
24 It's there are multiple different ways to
25 inject water into the core now. There are multiple

1 different pathways to cool down the core now. There
2 are multiple different ways to get fuel and additional
3 equipment on site. So there's a strategy that's
4 developed from some initial basis conditions, the ELAP
5 and the loss of access to the ultimate heat sink, but
6 it really is more than that. It's a more collective
7 review that the staff has been doing as well.
8 CHAIRMAN SCHULTZ: Jeremy, if I could just
9 ask at this point, you talk about this in terms of
10 review, and that's where we are in the process, but
11 could you talk a bit about the process that was used
12 to come to the formulation of the approach?
13 And what I'm getting to is that you had a
14 number of experts that were participating in this from
15 the beginning, as did the industry. And then in
16 addition there were public meetings that were held in
17 order to thrash out or discuss, or whatever words you
18 want to use to begin to identify the concept and then
19 move forward to the solution that we're seeing today.
20 MR. BOWEN: Right, so if --
21 CHAIRMAN SCHULTZ: I'm sorry, I don't want
22 to move forward in your slides, but --
23 MR. BOWEN: No, I was going to say if I go
24 back to this --
25 CHAIRMAN SCHULTZ: Okay. Good.

1 MR. BOWEN: -- slide, the development of
2 the industry guidance, the -- so as the Committee is
3 well aware, the Near-Term Task Force proposed some
4 recommendations. The staff took those
5 recommendations, kind of prioritized them and sent a
6 proposal to the Commission. The Commission came back
7 with direction to the staff and to issue the three
8 orders and the 50.54(f) letter.
9 Once the orders were issued, there were
10 multiple public interactions with industry. Industry
11 actually came in proposing the FLEX strategy. There
12 was some dialogue back and forth as to whether the
13 Agency would find that acceptable at a high level first.
14 Eric Bowman down here to right was actually intimately
15 involved in those discussions from the beginning.
16 In the end the guidance that industry
17 provided was -- I don't know remember the exact date.
18 I think it was sometime early 2012.
19 MR. BOWMAN: August 2012 was when they got
20 the final version.
21 MR. BOWEN: Yes. But before that final
22 version was sent in and approved -- endorsed by the
23 staff, there was several interactions on what's
24 appropriate. There was an Interim Staff Guidance
25 document that was developed. It was published in the

1 Federal Register for public comment. It was actually
2 brought before the Committee in July of 2012 for
3 discussion with all for review. And like Eric said,
4 that was finally endorsed by the Agency in August 2012.
5 From that document the industry went off
6 and developed their plans and then submitted their
7 plans in February of 2013. And then from that point
8 I like to say we moved from the lessons learned phase
9 into the implementation phase. And once the industry
10 sent in their proposals, we got a look at it and started
11 to review it against the industry guidance and found
12 that it was much more challenging that just kind of
13 picking up two pieces of paper and comparing them back
14 and forth.
15 And that's actually what I was going to
16 cover in the next few slides is how do we move from
17 reviewing a for the most part 70-page industry
18 submittal against a 100-page guidance document and a
19 15-page NRC endorsement?
20 MR. DAVIS: I think what you're getting to
21 though really is a lot of -- it's beyond-design-basis.
22 The staff is very used to doing design-basis review.
23 It's well thought out. This was a lot harder to do,
24 right? So you're really getting to how do we know this
25 is the right thing? And you're right, even as we move

1 along now we have meetings with the industry. We call
2 it the Fukushima Leads Meeting where we talk about
3 different interpretations or what is the right level
4 for something? How much additional pieces of the hoses
5 do you need, right? Do you need double the hoses, for
6 instance? Where we say n plus 1 on the equipment. So
7 it's those types of things.
8 I don't think there's any good answer other
9 than we keep having an open dialogue. Committees like
10 yourselves give good insights and say, yes, that makes
11 sense to do something like that or it doesn't. So it's
12 been difficult and it's been challenging.
13 MEMBER RAY: Well, let me suggest
14 something though that is related to what Jeremy said
15 before the last question was asked. He said rightly;
16 and I think we all should be very glad of this, that
17 now we have multiple ways of doing things. But they're
18 not all equal. And the question then is, well, how do
19 you retain that reality in what you say about them
20 instead of just saying, well, now we've got three ways
21 to do something when we only had one way before? Well,
22 but they're not all three the same.
23 MR. BOWEN: True.
24 MR. DAVIS: I think what he was talking
25 about before plants are going to go down their EOPs.

They're going to go symptom-based and they're going to try to recover like they normally would. Once they finally realize, no, this is way worse than it is, then they're going to enter their FSGs. They're always trying to get back though to a recovery mode, so they're going to go down their own prioritized list. For instance, water sources on site. They have their own prioritized list. They'll say if that tank, if the CST is available, I'm going there first and I'm going to do the following things to get myself back. If that's not available, I go to the next priority water source.

MEMBER RAY: I think that's understood. I just mean when you're communicating about what we've done it's not as simple as saying, well, now we've got multiple ways to do --

MR. DAVIS: Sure.

MEMBER RAY: -- what we used to only have one way to do.

MR. DAVIS: Yes.

MEMBER RAY: There's still only one way that meets the design-basis.

MR. DAVIS: Yes. Very true.

MEMBER RAY: Okay.

MR. DAVIS: I appreciate the comment because that's actually why we ended up taking the

1 review path that we did, because it was such a challenge
2 to figure out what is -- they are all different. What's
3 good enough? What's better? What's not slightly good
4 enough?
5 MEMBER RAY: Yes, it's very hard to decide
6 is it better, better enough and so on? I mean, we're
7 all struggling with that here. Okay.
8 MR. BOWMAN: Jeremy, if there's one thing
9 I could add, you had asked how we came about to what
10 we thought was good enough to accept for the guidance.
11 One major input to that is the recognition that we had
12 the other areas of work going on.
13 For example, one significant one, the
14 direction to proceed with the rulemaking that includes
15 the Severe Accident Management Guidelines. That drove
16 us to look at the mitigating strategies as being
17 intended to prevent core damage rather than -- we could
18 have looked at the wording of the order and said it
19 doesn't say stop at core damage. But recognizing that
20 we've got the Severe Accident Management Guidelines as
21 a specific directed activity by the Commission to look
22 at and consider whether they should be actually
23 required led us to not include those in the guidance
24 for this order or in the review process for this order.
25 And similarly, with the initial set of

1 directions from the Commission on pursuing
2 Recommendation 1 and the potential for an extended
3 beyond-design-basis limit separately from the
4 remainder of the activities, that's where you get the
5 limitation of what we're looking at for the protection
6 area in the external events as being essentially
7 equivalent to the design-basis because we were told
8 pursue the idea of an extended beyond-design-basis
9 limit outside of this process.
10 MR. DAVIS: The other thing that adds to
11 this -- and again, you're right, at the end of the day
12 it still comes down to a judgment call. But there's
13 a monthly JSC, Joint Steering Committee meeting that's
14 done at the CNO level to EDO level. And we're there
15 usually and we bring up certain issues that we're
16 struggling with to say what's the right level that the
17 Agency should feel comfortable with? And so you get
18 a lot of those types of discussions. And sometimes
19 they go on for -- it's on the agenda each time because
20 they can't make a decision because there are so many
21 different things that you're talking about that play
22 into making the right call. So these are hard
23 decisions.
24 CHAIRMAN SCHULTZ: I appreciate the
25 perspective. Thank you. That's been very helpful.

1 MR. BOWEN: So along those lines and about
2 the performance-based and complicated order, the other
3 aspect is there was a lot of interest in what was going
4 on agency action-wise, industry actions after the
5 orders were issued. So typically when the Agency
6 issues an order, it issues the order. It's a licensing
7 action. And then it follows up on that licensing
8 action in inspection space. We recognized that that
9 was not sufficient agency engagement for what we were
10 doing. It wasn't going to be enough to issue the order,
11 wait five years and then inspect to make sure everything
12 was done.
13 So in order to provide some regulatory
14 certainty for the industry moving forward, they're
15 spending a lot of money making these changes. We want
16 to make sure that they're done in the right manner, make
17 sure that what was being done when -- in five years there
18 was a legitimate improvement in safety to the plants.
19 And so to provide that regulatory
20 certainty and public confidence we implemented a review
21 process that we've tried to outline here in this
22 diagram. And I recognize it's a bit confusing at
23 first, but if I could step through it.
24 Along the top there are the licensee
25 products in blue. IN the middle how we conducted our

1 review in the yellow or orange. And then the NRC
2 product is down at the bottom in the green. As you can
3 see, as you move from left to right there are some dotted
4 lines and move into the more solid lines to the right.
5 The reason for that is as we started some of this was
6 again industry proposing some plans for what they were
7 going to do, but as you heard earlier, depending on the
8 time that they had to comply there was a lot of
9 calculations that needed to be done, a lot of strategies
10 yet to be fully developed.
11 So in some cases the initial integrated
12 plans that were submitted were, for lack of a better
13 way of putting it, plans for plans. So we needed to
14 review that and provide some feedback to the industry
15 and have some certainty that they were heading in the
16 right path. So we decided to develop what we called
17 an Interim Staff Evaluation, that document you see down
18 there on the bottom left. And we developed some
19 additional guidance to go along with the NEI-12-06
20 guidance and the NRC endorsement through the Interim
21 Staff Guidance.
22 That ISE guidance was an internal memo that
23 was made publically available of guidance basically
24 that Jack directed the technical staff and the project
25 managers to use to kind of evaluate to figure out just

1 what we were talking about a few minutes ago. What's
2 right? What's the threshold? Where do you adjust
3 that bar?
4 That initial review was done through some
5 electronic audits. We had an electronic reading room
6 where licensees were putting literally hundreds of
7 documents on these electronic reading rooms. We had
8 dozens to in some cases hundreds of questions that we
9 provided to the licensee. Then we had telephone calls
10 with them, three to four-hour phone calls where we asked
11 the licensee just to go through their strategy with us,
12 provide us an overview.
13 And then we would engage in a two-way
14 discussion about, okay, help us understand this. Your
15 strategy says X. Why did you make that decision? And
16 it was a lot of really -- it was helping us understand
17 what their strategy was and our feedback helping them
18 refine and understand, oh, this is what the regulator
19 is concerned about. So that first piece, the Interim
20 Staff Evaluation, those were all issued between
21 November 2013 and February this past year. And I'll
22 come back to this slide in a minute. But again, that
23 was the purpose of those.
24 In those Interim Staff Evaluations we
25 identified a couple categories of issues. One was an

1 open item. This is for something where the
2 staff -- where significant action needed to be taken
3 by the licensee in order to develop their strategy or
4 where the regulator decided that what was being
5 proposed by the licensee was not going to be sufficient
6 in our mind to meet compliance with the order.
7 The second category, if you will, was a
8 confirmatory item. This was where we conceptually
9 agreed with what the licensee was proposing in their
10 plan, but there was more work to be done; i.e., they
11 had run a calculation and said that we need a pump with
12 this capacity. We just haven't decided which level
13 capacity we're going to have and which pump it's going
14 to be. We just need to pick that pump and purchase it.
15 So we said, okay, conceptually we agree with that, but
16 we're going to leave it open. Once the licensee is done
17 with it, report back to us, let us know and we'll find
18 that acceptable.
19 And then the third one there you see is
20 acceptable or complete. That was where enough work had
21 been done, what the licensee was proposing, that if they
22 implemented it as they described the Agency would find
23 it acceptable and sufficient for meeting the
24 requirements of the order.
25 So again, those were all issued by February

1 this past year. And then what would happen is went into
2 that second phase and the electronic audits continued.
3 We continued to have phone calls with the licensees.
4 But in addition to that we decided that we would go out
5 to each plant and physically visit the site, walk down
6 the strategies that they had on site and evaluate the
7 progress the licensees had been making.
8 After that on-site audit -- that on-site
9 audit is done between issuance of the ISEs this past
10 February and prior to the first unit at a site being
11 in compliance. So all the sites that came into
12 compliance in the past couple months this fall have all
13 had an on-site audit.
14 CHAIRMAN SCHULTZ: How did you determine
15 when you were ready or when the site was ready for the
16 on-site audit?
17 MR. BOWEN: It was really based on, as I
18 mentioned, the time that the licensee had to be in
19 compliance. And then so if they were a fall of '14
20 plant, we needed to do an audit between February and
21 September.
22 CHAIRMAN SCHULTZ: Okay. That's
23 relative to the schedule, but then there was a decision
24 point somewhere along the lines in terms of readiness?
25 MR. BOWEN: Right. And the challenges

1 have been -- and you'll see it in the next couple slides,
2 the challenges is that every licensee would have liked
3 us to come as late as possible so that they could close
4 as many items as possible. But the vast majority of
5 plants have a spring of 2015 compliance or a fall of
6 2015 compliance. It was physically impossible for the
7 staff to out to that many sites in a one or two-month
8 period, so we had to work with the licensees to
9 identify.
10 There were some that felt they were further
11 along than others and it was a lot of working with the
12 licensees, the regions and our own personal staff
13 within NRR to identify when do we have the resources?
14 When is the licensee ready for us to come to the site?
15 And what's the appropriate time?
16 I will say that despite all those
17 challenges we have managed to schedule over 40 audits
18 in less than a 12-month period. Seventeen have been
19 completed to date. There has been a lot of positive
20 feedback from licensees, from the regions, from senior
21 NRC leadership about the information that's contained
22 and reviewed during those audits. We feel like we have
23 confidence that the licensees are implementing the
24 order as we intended, that they will be in compliance
25 by the time they come to their compliance outage. So

there's been very positive feedback and we think it was a good choice to go down this route despite all the challenges that were associated with it.

MR. DAVIS: Let me just add one point there, too. We identified if there were any sites that had concern on one of those open items that they wanted earlier. If they wanted NRC involvement in that, they should identify that to us and then we would schedule that appropriately. And we've done that in a few cases.

CHAIRMAN SCHULTZ: That's a good plan because this morning we've heard of the site-specific, the unit-specific --

MR. DAVIS: Yes.

CHAIRMAN SCHULTZ: -- evaluations or presentations and implementation that needs to be done here. And of course you needed to focus on that. It wasn't as simple as an owner's group activity that was going to address several different items on behalf of a number of plants.

MR. BOWEN: The other value we found is that, as I mentioned at the very beginning, licensees develop these plans in some cases three years in advance of when they needed to be in compliance. And then as they went back and started to refine the plans and

1 develop the more specifics, they realized, well, what
2 we had planned on doing won't work, so we need to revise
3 the plan.
4 So by us waiting -- we issued the Interim
5 Staff Evaluation, but if we do these additional audits
6 as they get closer to compliance; they've changed their
7 strategy, it provides us another opportunity to review
8 them. It's kind of following the licensees along the
9 way. It provides them some regulatory certainty
10 before they come into compliance. It provides us
11 regulatory certainty that the licensees will be in
12 compliance and the confidence to the public that the
13 decisions the regulator made and that the industry is
14 having to implement are the right decisions.
15 CHAIRMAN SCHULTZ: Thank you.
16 MR. BOWEN: Then the last piece of this,
17 again, as I mentioned, we don't typically do this for
18 an order, but we felt that it was appropriate to at the
19 very end when the licensees got full compliance that
20 they issue this final integrated plan that completely
21 documents what they're going to do for these
22 beyond-design-basis events, how they're going to
23 implement their FLEX strategies. We're going to
24 review that document and then issue a safety
25 evaluation.

1 That safety evaluation is going to be our
2 paperwork review of the licensee's strategies to say,
3 okay, if the licensee implements this plan as it's
4 described here on paper, based on our collective review
5 over the past however many years, it meets the
6 requirements of the order. Taking that safety
7 evaluation, we will then go into a post-compliance
8 inspection and then go out and verify -- as we would
9 with any other order, verify that the licensee has
10 implemented the order as they were required to using
11 the safety evaluation in the final integrated plan as
12 guidance to make sure that the licensee is in compliance
13 with the order.
14 MEMBER SKILLMAN: Jeremy, if in the year
15 or two or five years that follow that activity the
16 licensee finds it's necessary to change the plan;
17 perhaps they've had a hardware change, they've had
18 construction changes on site, whatever it might be, are
19 they able then to change that through their 50.59
20 process, or will they have to come back to the Agency?
21 MR. BOWEN: So it depends on the timing of
22 when the change is. It's prior to compliance, they're
23 just changing their plan and informing us prior to our
24 audits and everything. If it's after compliance,
25 there is actually change process that's currently

1 outlined in the Industry Guidance, NEI-12-06, that
2 talks about how they would evaluate the change in their
3 strategy and whether they should come into the Agency
4 for prior approval or whether they can self-implement
5 that change. It's very similar to a 50.59 process.
6 50.59 in this case doesn't apply because
7 of the beyond-design-basis nature of the event.
8 However, it's a very similar process. The draft
9 rulemaking language that you'll hear tomorrow actually
10 takes that language and incorporates it directly into
11 the regulation itself.
12 MEMBER SKILLMAN: Okay. Thank you.
13 Thanks.
14 MEMBER RYAN: Jeremy, just a follow-up
15 question. I noticed on slide 11 it says to be performed
16 within one year of the safety evaluation being issued.
17 MR. BOWEN: Yes.
18 MEMBER RYAN: That's a lot of work in one
19 year.
20 MR. BOWEN: Yes, it is.
21 MEMBER RYAN: No, I mean, is that a doable
22 schedule?
23 MR. BOWEN: Yes, this is something that
24 we've been working with the regions closely on. We
25 have a draft temporary instruction. In fact, it's on

1 the very next slide.

2 MEMBER RYAN: Okay. There we go.

3 MR. BOWEN: So we have a draft temporary

4 instruction. And as I said, it will verify compliance

5 with the orders. It covers mitigating strategies, the

6 spent fuel pool instrumentation. And as you heard

7 referenced this morning, as part of the 50.54(f) letter

8 licensees had to do a staffing and communications

9 assessment to make sure that they actually had adequate

10 staff and adequate communications on site to implement

11 these strategies. They provided a response to that

12 letter this past spring. We issue staff assessments

13 on those and then they provide an update on that. That

14 has to be done prior to compliance with the order.

15 MEMBER RYAN: So it sounds like some of the

16 heavy lifting has already been done.

17 MR. BOWEN: Yes.

18 MEMBER RYAN: Yes, okay.

19 MR. BOWEN: So this inspection itself is

20 going to go out and look at -- the safety evaluation

21 is going to document again on paper what should the site

22 be doing. And the regions are going to out, implement

23 this temporary instruction to verify that the licensees

24 really have done what they've committed to do.

25 MEMBER RYAN: Thanks. That's helpful.

1 MR. BOWEN: So the TI, we did have a public
2 meeting on this this past July. We don't typically do
3 that when we develop new inspection procedures, but in
4 this case we thought that it was appropriate
5 considering this was a new thing, a completely
6 different process. So we had the public meeting. It
7 was very well attended by members of the industry and
8 members of the public.
9 The TI, to give you a little bit more
10 information, it'll be about a three-person team on site
11 for a week. Again, it will be conducted by the regions.
12 And the pilot for that, the first plant that will be
13 inspected is Watts Bar. They're the first unit to send
14 us their -- or first plant to send us their final
15 integrated plan. That just occurred at the end of
16 October. We're writing the safety evaluation of that
17 for now to be issued by the middle of December. We'll
18 be conducting training on the temporary instruction and
19 then the pilot will be conducted in January,
20 mid-January.
21 MEMBER RAY: And that will be for a
22 dual-unit plant?
23 MR. BOWEN: Yes. So based on that pilot
24 at Watts Bar we're going to go back and take any lessons
25 learned from that, revise the TI as necessary and as

1 appropriate. And then the temporary instruction will
2 be ready to go once the remaining sites, if you will,
3 start coming into compliance, and that will be late
4 summer to early fall of next year.
5 So this slide kind of lays out everything
6 I just told you in graphical form as far as the schedule.
7 We've used this to communicate many times in the Joint
8 Steering Committee meetings that Jack mentioned. It
9 talks about all the key different activities we're
10 doing, the Interim Staff Evaluations, the audits, when
11 plants come into compliance and when the inspections
12 will be done. The color coding was there to kind of
13 reference workload balancing. As you can see, there
14 are some peaks and valleys. And like I said, we've got
15 over 40 audits scheduled in less than a 12-month period.
16 So there are 17 completed so far and we're on track.
17 MEMBER BLEY: These are being done by the
18 normal inspection teams in the regions?
19 MR. BOWEN: No, these are actually being
20 done out of headquarters. The same NRR staff that
21 completed the Interim Staff Evaluations is the same
22 staff that are doing the on-site audits.
23 That being said, we do have members of the
24 regions participating in the audits as well. That's
25 one to gain some fresh perspective. The folks in the

1 regions have the most direct interactions with the
2 sites, the most understanding of the plants themselves
3 when it comes to where equipment is and stuff like that.
4 But it's also to kind of help transition the whole work
5 product, if you will, from an NRR licensing type of
6 product into a post-compliance inspection type of
7 product.
8 And as we talked about multiple times
9 already, this is a different mind set. This is a
10 different way of thinking about how do we evaluate
11 beyond-design-basis? What's good? Where is that
12 threshold? What's good enough? When do you push an
13 issue? When do you say, okay, that makes sense? So
14 that's part of the regional involvement, too, is to help
15 with that education and understanding.
16 MEMBER CORRADINI: So in post-compliance
17 inspections does that include determining some sort of
18 maintenance of check schedule for the on-site equipment
19 and drills for the off-site regional?
20 MR. BOWEN: Yes, so as part of the
21 licensees' submittals there was a couple of generic
22 issues, if you will, that were discussed. Maintenance
23 and testing was one of those. And so industry
24 collectively got together and presented a white paper
25 of how they plan to develop their maintenance and

1 testing schedule in coordination with EPRI guidelines.
2 That proposal supplemented the NEI-12-06 guidance and
3 the staff basically endorsed that.
4 That plan is being rolled into the next
5 revision to NEI-12-06 and all licensees are planning
6 to do that. It's actually going to be written into our
7 safety evaluation. It's going to be written into all
8 the licensees' plans and it will be written in our
9 safety evaluation that that's the expectation. As
10 part of the post-compliance inspection the TI has a
11 section that checks to verify that that maintenance and
12 testing program is in place.
13 Now to the second piece of your question
14 about the drills and exercises, that's actually part
15 of the ongoing -- the rulemaking discussion. What's
16 the appropriate time frame for the drills and
17 exercises? And that's still being debated amongst the
18 staff. The last interaction I understand was --
19 MR. BOWMAN: This Eric Bowman. At
20 present in NEI-12-06 in Section 11 it has discussions
21 of training including the use of drills and exercises,
22 and it sets it at an eight-year cycle. An eight-year
23 cycle is what's currently in the preliminary proposed
24 rule language for the rulemaking that we'll be
25 discussing tomorrow.

1 MEMBER CORRADINI: Okay. Thank you.
2 CHAIRMAN SCHULTZ: Jeremy, on the
3 previous slide, on the scope of the inspection you've
4 got emergency preparedness, staffing and
5 communication. Is that fairly narrowly defined? Are
6 you going to for example be looking at -- when you say
7 "staffing," is that going to be qualifications of staff
8 as it relates to the mitigating strategies?
9 MR. BOWEN: Yes, it's the staffing and
10 everything that's necessary to implement the FLEX
11 strategies.
12 CHAIRMAN SCHULTZ: Okay.
13 MR. BOWEN: So it's all the aspects of
14 that, but it's narrowly focused on just that.
15 CHAIRMAN SCHULTZ: A subset of mitigating
16 strategies. And then spent fuel pool instrumentation,
17 is that just, well, we're going to be there anyway and
18 the timing is about right, so we'll look at spent fuel
19 pool also?
20 MR. BOWEN: Yes. Without going into all
21 the details to why, the decision was made to write one
22 safety evaluation encompassing both the Mitigating
23 Strategies Order and the Spent Fuel Pool
24 instrumentation Order. So because we're going to
25 write one safety evaluation, we're going to do one

1 inspection to cover both orders.

2 CHAIRMAN SCHULTZ: And in that area the

3 inspection will be --

4 MR. BOWEN: That portion of the inspection

5 is very limited.

6 CHAIRMAN SCHULTZ: It's a validation that

7 what was said would be done is complete?

8 MR. BOWEN: The instrument is in place and

9 you can read it.

10 CHAIRMAN SCHULTZ: Yes.

11 MR. BOWEN: It's literally -- I think it's

12 a two-hour, three-hour portion of the inspection so

13 it's not much.

14 CHAIRMAN SCHULTZ: That's good. Well,

15 you've got plenty to do in that time frame, so that's

16 fine.

17 MR. BOWEN: Yes.

18 CHAIRMAN SCHULTZ: That's good.

19 MR. BOWEN: The inspection is in no way

20 intended to reopening the engineering evaluation that

21 was done here at headquarters. It is simply to verify

22 that what is on paper is in place at the plant and that

23 it can be --

24 CHAIRMAN SCHULTZ: Now it's making sense?

25 MR. BOWEN: Right.

1 CHAIRMAN SCHULTZ: Yes.
2 MR. BOWEN: Please show me that you have
3 this building and that you have this pump.
4 MEMBER RYAN: So it really boils down to
5 an implementation inspection rather than a activities
6 you're going to do inspection, or that the licensee is
7 going to do?
8 MR. BOWEN: Yes.
9 MEMBER RYAN: Okay. That's fair enough.
10 CHAIRMAN SCHULTZ: It's done and it's in
11 place.
12 MR. BOWEN: Yes. So that kind of outlines
13 the review strategy as a whole at a high level. Now
14 what we want to do is go into a couple select topics
15 that we know that the Committee is interested in hearing
16 about. So the first one we're going to cover is the
17 response centers, and then we'll go into the others.
18 I'm not going to go into a lot of detail
19 on the background. Dan Brush covered this already. I
20 do want to draw your attention to --
21 CHAIRMAN SCHULTZ: Jeremy before you do
22 that, I'm looking at the schedule for the remainder of
23 the day, and although we took a late lunch, it was a
24 short lunch. And this is a good break point for us and
25 I'm going to go ahead and call a recess and ask everyone

1 to be back at 3:15.

2 (Whereupon, the above-entitled matter

3 went off the record at 3:02 p.m. and resumed at 3:19

4 p.m.)

5 CHAIRMAN SCHULTZ: All right, we've come

6 out of recess and back in session. And Jeremy, I'll

7 turn this back over to you.

8 MR. BOWEN: So as I was mentioning before

9 the break, since Dan Brush went through a lot of this,

10 I wasn't going to go through it in depth.

11 So I'm going to talk about how we reviewed

12 the response centers and everything, but I do want to

13 just show on this one, I didn't see a picture in Dan's

14 presentation. Sorry to call you out, Dan.

15 This is a typical load for one site. It's

16 not everything on there, but you can see the four pumps,

17 the turbine generator there in red. The blue one to

18 the right of the picture is the 4160 generator. The

19 red one is the 480. So that's basically six tractor

20 trailers for one site is the generic equipment.

21 So the way we conducted our review, again

22 many of the questions the committee members were asking

23 during the presentation or earlier several questions

24 we asked, we did observe --

25 CHAIRMAN SCHULTZ: We want to know what

1 you heard when you asked your questions.

2 MR. BOWEN: The response centers we

3 visited, several times the ribbon cuttings were this

4 past May and June. We started probably in February

5 starting, getting much more in depth in our review. We

6 went to a couple of sites and observed the SAFER team

7 come out to the site, visit the site to develop the play

8 books, watch them interact with the site for the day

9 and how they determined well, what's the equipment

10 that's needed? How do you plan on contacting SAFER?

11 What's your off-site staging areas? What are your

12 deployment routes? That sort of stuff. Like I said,

13 at a couple of the sites, went to the response centers

14 themselves. We've taken all the regional

15 administrators out to the response centers and look

16 forward to being able to go with the committee to the

17 Phoenix response center in May.

18 The two proof of concept exercises that

19 were conducted at Three Mile Island and Surry, we

20 observed those and we had staff members at each of the

21 locations taking notes, observing both the response of

22 the industry and SAFER, but also as we would any other

23 activity, seen how the licensees and SAFER were

24 observing their own folks and identifying issues to

25 make sure that they had a robust program that they were

1 identifying issues and correcting those issues. So we
2 had some observations from those proof of concepts.
3 One of the biggest things that we came away
4 with, and I think it was mentioned earlier, was the
5 distinction between which organization was responsible
6 for which activity at the time. The proof of concept
7 observations were really, I think, eye opening to
8 industry as well to see just -- on paper, it sounded
9 real straight forward, real clear that this is how we
10 go down, but once they actually went through it there
11 was some points that just wouldn't have revealed
12 themselves had they not gone through the exercise.
13 So they clarified a lot of those
14 responsibilities. The documentation -- the training
15 plan, the documentation wasn't all complete at the
16 time. Since that time all that was complete. We
17 reviewed all that information.
18 The helicopter resources was some
19 extensive discussions we had. That probably started
20 in earnest around the July time frame. As Dan and Mile
21 Powell mentioned, there was some interactions with
22 SAFER, NEI, FEMA, Department of Homeland Security, and
23 DoD. We participated in all of those discussions. We
24 brought Office of Nuclear Security and its response
25 into the discussions. They participated in their

1 reviews as well from an emergency planning perspective,
2 that background. We made sure that we had the right
3 staff from our side to kind of make sure that this was
4 a viable option.
5 But long story short, we're
6 confident -- well, one other thing I'd like to mention.
7 We visited the Custom Critical facility, the FedEx
8 Custom Critical facility in Akron, Ohio, as well, to
9 understand exactly how does that leg of FedEx work.
10 When we heard FedEx was delivering all the equipment,
11 everybody thinks of the driver pulling up to your
12 driveway and dropping off a box.
13 MEMBER REMPE: I wanted to ask that
14 question.
15 MR. BOWEN: So we went out there and we got
16 a full run down of exactly what FedEx Custom Critical
17 is and they started the presentation with "We deliver
18 the big, the ugly, and the unwanted." They gave us a
19 lot of examples of previous activities that they had
20 done, anything from flying immediately after 9/11 to
21 delivering vaccinations for an entire country's
22 population and they gave us a lot of confidence that
23 despite the fact that 24 hours is identified that there
24 is some margin inherently built into that 24 hours.
25 Couple that with the fact that as you heard Scott Bauer

1 mention, there are a few sites that actually don't
2 need -- that need equipment within 48, but the vast
3 majority don't even need that for 72. And then most
4 of the equipment in that case becomes a backup to a
5 backup on site.
6 So all that combined with the multiple
7 tiered assets, the response centers became another
8 version, a microscopic version of the whole FLEX
9 concept in and of itself. It's not one specific way
10 of doing something. It's multiple different
11 mechanisms and that tiered and flexible, diverse
12 strategy gave us the confidence that what industry
13 proposed with these response center really does meet
14 the third phase of the order requirements.
15 We issued our staff assessment at the end
16 of September on those response centers. And we
17 think -- we declared they are operational. So
18 licensees when they're coming in and sending their
19 final integrative plans, what we expect them to do is
20 to reference the industry letter that provided all of
21 the information to us on the response centers and in
22 turn, in our safety evaluation back to the licensees
23 we plan to issue, to reference our endorsement as well.
24 MR. DAVIS: I would just add that the
25 Custom Care, Custom Critical facility is quite

1 impressive. And we got a full demonstration of how
2 they can track real time. Any of their drivers, they
3 can tell you if they've stopped. They can tell you what
4 kind of training they have, if they have HAZMAT, if they
5 have nuclear training and so on. They can tell you who
6 the drivers are, a whole bunch of information and can
7 contact them at any point during that transit.
8 MEMBER REMPE: But since you're depending
9 on a commercial company, are you going to continue doing
10 some sort of audit, sort of inspections to continue
11 having confidence that they're going to maintain it if
12 something happens with their company? How do we ensure
13 that confidence?
14 MR. BOWEN: So as we've gotten through
15 this process, this initial review, and like I said,
16 we've set up the next post-compliance, the
17 implementation inspections, if you will, the next piece
18 that we've just started looking at now is the long-term
19 oversight, how do we continually make sure that the
20 licensees and the response centers are continually
21 viable. We've just started that process, but short
22 answer to your question is yes. We do plan on a
23 long-term oversight of this in some fashion. The
24 details have yet to be worked out.
25 MEMBER BALLINGER: A number of times

1 people have mentioned what happens if -- usually these
2 events occur in parallel to other events. What happens
3 if Custom Critical is not so Custom Critical? Is there
4 another backup?
5 MR. BOWEN: There is no -- as far as air
6 and fixed wing and ground transportation, Custom
7 Critical is it. But the information that we receive
8 from them is sufficient. They gave us confidence that
9 a backup in that respect wasn't necessary.
10 MR. DAVIS: I think industry is probably
11 the better one to answer this question, but I can tell
12 you from our visit up there they work around the clock
13 to figure out if they don't have a piece of equipment
14 available, they find a piece of equipment available,
15 even if it's another carrier or if they have to start
16 shipping the stuff first and to get to the next airport
17 so they can get it on an aircraft, they will. They will
18 unload other people's products and put this one on if
19 they need to. But Dan, you're probably best to answer
20 that.
21 MR. BRUSH: Dan Brush, Exelon. Just a
22 thought, PECO who manages the industry capital assets
23 is very experienced at going into trucking companies
24 and picking a truck out, a method of delivering a large
25 piece of equipment roughly overnight. So within a

1 matter of hours they have contracts with other
2 companies. So if FedEx were to fail, we do have
3 experience in going out and getting other trucking
4 companies. The fixed wing portion might be a little
5 tougher, but if we had an idea that FedEx was going to
6 fail, we certainly would start looking at that.
7 MR. BOWMAN: This is Eric Bowman. One of
8 the things that FedEx Custom Critical does, it's a
9 subdivision of FedEx and they were implemented as an
10 expediter for freight, not necessarily using their own
11 trucks or the FedEx fleet of aircraft. They also go
12 out and survey the industry, the freight industry and
13 contract for additional airline or airframe assets or
14 trucks on the open market.
15 MR. BOWEN: That's a good point. The
16 example that came up earlier about having a plane in
17 the air after 9/11, they told us that that was actually
18 a private contracted plane out of California that they
19 had flown to Detroit. It wasn't a FedEx plane, but they
20 had contracted the plane, had gotten approval through
21 the FAA and had it in the air within hours.
22 MEMBER BROWN: Were they subject to
23 strikes, worker walkouts?
24 CHAIRMAN SCHULTZ: Charlie, microphone,
25 Charlie.

1 MEMBER BROWN: Were they subject to
2 strikes?
3 MR. BOWEN: That was a question we asked
4 as well and again, because they have the ability to
5 contract with multiple different entities, they're not
6 relying just on, if something were to happen with the
7 FedEx workforce, they're not relying on just them.
8 They have multiple areas that they can touch.
9 MR. BOWMAN: The other piece of it is that
10 FedEx Custom Critical does have about 1400 directly
11 contracted tractor trucks available. They are not
12 direct employees of FedEx Custom Critical. They're
13 independent contractors. So there isn't really a
14 mechanism for the independent contractors to go on
15 strike.
16 MEMBER BROWN: I knew that some of them
17 were, the local ones, but I didn't know about this
18 larger entity. That's why I asked the question.
19 MR. BOWMAN: Right.
20 MR. DAVIS: And there was a comment that
21 was made in the previous discussion about trucks not
22 being up to par and so on. That was one of the things
23 that we also asked the Custom Critical facility. And
24 there's like a minimum standard that they have for the
25 people that they're going to contract with because they

1 put FedEx name on the side and so. When those people
2 are no longer meeting that standard and they're going
3 to cut their ties with them, they go out and verify that
4 the truck has been basically, you know, you take all
5 of their equipment back off of it and they want to ensure
6 that you're not representing FedEx any more. There's
7 a standard of quality by their own corporation above
8 what we're asking.
9 MR. BOWEN: Maybe a level of detail
10 that -- just to give you some -- a bit of example, when
11 Jack and I were out and observed, we happened to be in
12 Phoenix for the response center proof of concept that
13 was out there. And they had a guy come up, a FedEx
14 truck, Custom Critical truck, drove out, picked up a
15 single box to represent the deployment of equipment.
16 We followed him to the airport. He got to the area
17 where he was supposed to go, walked up to the door and
18 it was locked. So he went over to the 24 hour security
19 section. He walked in, before he could even say who
20 he was, the person saw the FedEx Custom Critical on his
21 shirt and he said, "Oh, we're expecting you. Go to Bay
22 24."
23 So the communications capacity and the
24 interactions at the facilities that they have, it was
25 impressive to see how far in advance they can plan and

they can interact and make sure that they've got the right people in the right places where they need to go. And they've set up their organization to be successful, recognizing that there's going to be road blocks.

MEMBER BROWN: I hope they checked who he really was as opposed to the patch on his shirt.

MR. BOWEN: I think with that, we're going to move on to some of the other conflicts.

MR. BAILEY: So the next topic we were asked to talk about really is alternative approaches. I'm Stewart Bailey. I'm one of the branch chiefs in the JLD. I have the containment and balance of plant. And previously, I also had the electrical reviewers.

In terms of the alternate approaches, what we're talking about here is we went through a little bit the development of NEI-12-06 and its history. That was basically developed as the ground rules before anyone started developing their integrated plans. And that does represent one approach for meeting the order that is acceptable to the NRC. But of course, as licensees started developing their plans and optimizing it for any unique features on their plant, they came up with either better ways to do it or the need to do something a little bit different than what was being presented in NEI-12-06. And so

1 that's what we mean when we're talking about the
2 alternative approaches. We end up reviewing those on
3 a case-by-case basis based on the plant itself. We're
4 looking for the level of redundancy, the level of
5 diversity that it needs, the capacity of the
6 alternatives that they have.
7 We've talked about some things earlier
8 today that probably could have been considered an
9 alternative. If you think back to the Palo Verde
10 presentation, they talked about the use of installed
11 charging pumps whereas NEI-12-06 talks really about the
12 use of portables. They're doing this, of course,
13 because they're installed. They meet the definition
14 of robust and it allows them to get to the best water
15 sources in a short period of time.
16 Thinking back, I'm not sure whether we
17 identified that as an alternative. They do have the
18 backup capability to install a portable pump, so we
19 might not have called that one out, but it's these
20 backups and it's the overall redundancy of the systems
21 that we would look at when we went into reviewing
22 something like that.
23 MR. SNODDERLY: Excuse me, Stu.
24 MR. BAILEY: Sure.
25 MR. SNODDERLY: This is Mike Snodderly.

1 You provided Rev. 0 of 12-06 to the committee to review.
2 I understand there's a Rev. 1, they're working on Rev.
3 1.
4 MR. BAILEY: Sure, so that was at the end
5 of mine. I'll jump to that -- that's okay, that's okay.
6 They're all revising NEI-12-06, just like what led them
7 to have alternatives in the first place. We're
8 learning as we're going through this process and
9 they're looking to incorporate the lessons learned into
10 NEI-12-06. Part of that is if there are widespread,
11 if you will, or generically acceptable alternative
12 approaches, the attempt is to write those into the next
13 revision of 12-06. And that would become some of the
14 guidance document that would support the rulemaking
15 that we'll be discussing tomorrow.
16 MR. SNODDERLY: And what's your plan for
17 revising then your interim staff guidance?
18 MR. BOWMAN: It will be a topic of
19 conversation tomorrow, but briefly, we had our first
20 public meeting on the draft version of Revision 1 to
21 NEI-12-06 yesterday. The document, it's premature to
22 provide it to the committee to take a look at it. It
23 still needs some editorial changes and there are some
24 items that we need to discuss further with industry and
25 with other stakeholders to come to alignment on whether

1 or not it should be included in the way it's written
2 in there.
3 I anticipate that we'll have interactions
4 with the committee in the not too distant term. The
5 intention is we're developing a draft guide to be
6 available at about the same time as the proposed rule
7 package goes up to the Commission and we will, of
8 course, interact with the committee on the draft guide
9 and ultimately on the regulatory guide when the time
10 comes.
11 MR. BAILEY: So that's essentially what
12 we're talking about and they get reviewed in the
13 plant-specific basis. So another item we were asked
14 to talk about was reactor coolant pumps seal leakage.
15 Obviously, this has been a significant focus area and
16 mitigating strategies for reasons that were already
17 discussed today. This is one of the primary drivers
18 in terms of the sequence of events on the RCS protection
19 aspect of the rule.
20 The licensees with low leakage seals,
21 qualified low leakage seals, you could essentially just
22 sit there, stay hot and not depressurize. It allows
23 you a lot of time. But if that is not the case, like
24 you see licensees cooling down in order to reduce the
25 seal leakage and prevent further damage to the seals,

1 this introduces all the considerations that we talked
2 about earlier today. Not only the loss of inventory,
3 but if you've got a cooldown, you're shrinking, you're
4 cooling down and worrying about criticality concerns
5 and it basically drives the overall RCS response.
6 Really, what we're looking at is the ELAP
7 causes a destruction of the coolant, the reactor
8 coolant pump seals which generally increases their
9 leakage.
10 Actually, this continues to be a point of
11 interest. If you look at the seals that are there,
12 they're in various conditions right now in terms of the
13 stage of review. For the Westinghouse shield seal,
14 that is their low leakage seal. They have provided a
15 white paper and we have accepted the use of that seal
16 for the purposes of ELAP. They have a little bit more
17 work to do to qualify that to the extent that they would
18 like under NFPA-805 and get the risk reduction that
19 they're looking for, but we've already approved that
20 for the ELAP.
21 The other seal that was discussed earlier
22 today is the N-9000, the Flowserve N-9000. That one
23 is still under review. AREVA has a seal model that
24 we're still waiting for information, so I would call
25 that one under review, but I would say that the biggest

1 time consumer right now deals with the Westinghouse
2 standard seal, so if we go to the next slide.
3 CHAIRMAN SCHULTZ: Stu, before you go
4 there, I wanted to understand. You said the
5 Westinghouse improved seal was acceptable for ELAP, but
6 not still under review for other purposes. Did I get
7 that right and if so, what's the differentiation
8 between what you would find acceptable for this purpose
9 and not for others? They're still under review for
10 others.
11 MR. BAILEY: Okay, well, I can point to
12 some differences. As part of the overall review of
13 that seal, Westinghouse came up with an integrated test
14 plan that we find acceptable to show that there is
15 beyond a preponderance of evidence that these seals
16 will operate as required for us.
17 For the purpose of NFPA-805, there is a
18 little bit more work that they would need to do. One,
19 to demonstrate that the testing supports the risk
20 values that they would like to use. Also, they have
21 an additional focus there on issues such as failure of
22 seal cooling without tripping the reactor coolant
23 pumps, something that we don't really have to deal with
24 in the ELAP realm.
25 There are a few considerations there, a few

1 differences.

2 CHAIRMAN SCHULTZ: I got it. Thank you.

3 MR. BAILEY: Okay. So in the

4 Westinghouse standard seal, initially, the plants for

5 the generic, I'll call it the generic analysis that was

6 performed by Westinghouse for the different

7 configurations of the Westinghouse reactors. That

8 assumed a 21 gpm leak rate. Earlier this year, they

9 put out a Nuclear Safety Advisory Letter, NSAL-14-1

10 which indicated that there were some errors associated

11 with that 21 gpm or potentially some errors. That 21

12 gpm was based on a configuration of the leakoff line

13 and as it turned out that leakoff line was not as they

14 assumed for all of the plants. And so what they're

15 doing now is they're going back -- I guess they've

16 already developed new models for the leakage from that

17 seal and we are looking at benchmarking that against

18 some EDF data to make sure that that is clear.

19 Some licensees currently have higher or

20 are projected to have higher than 21 gpm leakoff. They

21 can either reflect that in their analysis or a lot of

22 them are doing modifications to restore the 21 gpm to

23 putting in an orifice in the leakoff line and as this

24 notes and at that point if it had not been looked at

25 before, we're looking at what's the effect of

1 pressurization of that leakoff line at that time.
2 So this ends up, once again being a
3 plant-specific evaluation. For some plants, they are
4 taking conservative action times, if you will, to
5 restore makeup to the reactor plant system to borate
6 early as necessary or stay out of the reflux cooling
7 mode.
8 So on equipment functionality post event,
9 I think we've had a little bit of discussion about this
10 already, too. In general, we're looking to prevent
11 fuel damage. The going in assumption is that we are
12 going to prevent a fuel damage. The stylized event,
13 if you will, is ELAP and a loss of ultimate heat sink
14 and then what we do essentially is superimpose upon that
15 the various external events that the plant is
16 determined to be susceptible to. And the guidance for
17 that, of course, is all in NEI-12-06.
18 MEMBER RAY: You know, you say terminology
19 thing. The slide I thought was quite good earlier they
20 called minimal access to element heat sink. We keep
21 calling it loss of the element heat sink. That's not --
22 MR. BAILEY: You are correct. And it
23 is --
24 MEMBER RAY: The air, the atmosphere is
25 the element heat sink regardless of how you get there.

1 But minimal access to element heat sink just sounds
2 better.
3 MR. BAILEY: And typically what we're
4 talking about here is normal access to what the plant
5 defines as ultimate heat sink which is usually their
6 water source.
7 MEMBER RAY: Yes, right.
8 MR. BAILEY: It's a protected water
9 source.
10 MEMBER RAY: We're talking sometimes to
11 broader audiences. Normal access I think is the right
12 way to say it.
13 MR. BAILEY: It's the motive force. It's
14 the power to the pumps. Water is still available.
15 MR. BOWMAN: The requirement is subtly
16 different for new reactors with the AP1000 design. For
17 them, it was the loss of normal access to the normal
18 heat sink because as you mentioned, the atmosphere is
19 the ultimate heat sink.
20 MEMBER RAY: I always thought atmospheric
21 steam dumps from the PWR and went to the ultimate heat
22 sink, just a different way than normal.
23 MR. BAILEY: I think in the purest
24 engineering definition, you're absolutely right. I
25 think for plants we've called it the water source,

1 although the heat is actually bound up --

2 MEMBER RAY: I just want to note the slide

3 earlier, I think, gives the right terminology.

4 MR. BOWMAN: The vacuum is the ultimately

5 heat sink because the atmosphere radiates.

6 MR. BAILEY: We'll stop a couple short of

7 that one if we can though. So --

8 CONSULTANT SHACK: I'd like to make a

9 comment.

10 CHAIRMAN SCHULTZ: Yes, Bill.

11 CONSULTANT SHACK: NEI-12-06 always

12 seemed to me a little bizarre that it's in response to

13 an order that discusses beyond design basis external

14 events. Now I'll agree certainly that all

15 those -- besides the design -- beyond a design basis

16 event. It really doesn't have very much to do with

17 beyond design basis external events. The equipment is

18 required to be robust, but robust in 12-06, it says it

19 meets design basis.

20 All the requirements for storage are

21 design basis. That's actually fine, you know, it's a

22 useful beyond defense-in-depth measure. I think it

23 does point to the need to go through the 2.1 assessment,

24 as Harold points out, to make sure that we can at least

25 meet the design basis with the design basis. So that's

1 your comment on robustness.

2 MR. BOWEN: This is Jeremy Bowen and I

3 think to start with it goes back to what we originally

4 mentioned at the beginning of the presentation is it

5 was trying to NEI-12-06 tries to define the undefinable

6 event and sets some parameters at which to start with.

7 Everyone recognizes that the orders for

8 beyond design basis events, the question is what is

9 that? How far does that go? How do you try and say

10 whether something is acceptable or not when you don't

11 know what you're comparing it against?

12 CONSULTANT SHACK: Well, we do that with

13 seismic when we talk about seismic origin. I admit

14 it's harder to do for flooding because we don't really

15 have as good a characterization of design basis floods

16 as we do with design basis seismic event. For seismic,

17 we do it for Part 52.

18 MR. DAVIS: This is Jack Davis. Yes, it's

19 a good point you're making. In fact, you're probably

20 aware that we've been working on a paper that's going

21 to go up to the Commission to talk about the reevaluated

22 flood hazard from 2.1 and how that integrates with

23 mitigation strategies approach and that the idea would

24 be that licensees would need to be able to demonstrate

25 that they have a viable strategy even given those higher

1 elevated floods.

2 MR. BOWMAN: This is Eric Bowman, if I

3 could just add one other thing. Bill, in the process

4 of putting together EA-12-049, we did have a great deal

5 of interaction with internal and external stakeholders

6 and one of the things that we took into account and the

7 reason why you see the phrase beyond design basis

8 external events is because we were not seeking to

9 address things like random failures that result in

10 internal flooding or events like that, but the idea

11 being that we were looking to the consequences of events

12 that were external to the plant due to natural

13 phenomena.

14 MR. BAILEY: So that probably took a lot

15 of the last bullet on this slide which talked about

16 what's going on for the reevaluated hazards. The

17 thought at this point is that when there's further

18 information on the reevaluated hazard that the

19 mitigating strategies would be revisited, if you will,

20 for their ability to address the new hazard

21 information.

22 MR. BOWEN: I'd also note that earlier

23 this morning there was some discussion about the

24 building configuration, the storage buildings for the

25 portable on-site equipment and the reevaluated seismic

1 hazards and how that was being factored in. I'll note
2 that if the buildings are new construction and they're
3 built to ASCE-7-10 standards, the version of ASCE-7-10
4 that's used to construct those buildings includes the
5 2008 catalog of data that was used with the same catalog
6 of data that was used to develop the Central and Eastern
7 U.S., the latest GMRS curve. In that respect, the
8 building itself has already accounted for that
9 reevaluated hazard information from a seismic
10 standpoint.
11 MR. BAILEY: So I don't want to spend too
12 much more time on robust here, but the equipment that
13 is being -- going up a couple of bullets, the equipment
14 that is being relied upon is required to be robust.
15 What you'll see in a lot of plants is they end up with
16 multiple strategies depending on what equipment is
17 robust at their plant, that typically, it will end up
18 being a separate strategy for the flooding events if
19 something is not available or in some cases even for
20 the seismic if the water sources are not seismically
21 qualified.
22 CHAIRMAN SCHULTZ: Stu, here when you say
23 the equipment, we're talking about equipment that's on
24 site that's going to be brought in to be used? We're
25 not talking about the installed equipment that is

1 already there in combination with? In other words,
2 we're talking about the system is required to be robust.
3 MR. BAILEY: Well, I guess it falls into
4 three categories here. The category that I was just
5 referring to there, or the examples that I was given
6 right there, deals with the water sources, the sources
7 of the consummables, okay? So there are a few things
8 that you need to look at. Am I looking at the Phase
9 1 equipment, the Phase 2 equipment, or where am I
10 getting my consummables such as water and fuel.
11 The Phase 1 equipment, of course, is
12 installed, so it is designed to address the design basis
13 event. But of course, during the ELAP, it has
14 generally lost all of its support equipment. So we go
15 and look at the ability to operate that equipment or
16 the survivability of that equipment with the loss of
17 support equipment that can include sealed cooling,
18 direct sealed cooling, overall room ventilation,
19 things of that nature that we go through.
20 Now most of your heat losses or heat
21 sources are gone if they are electrically-driven heat
22 sources like the large pumps in a room. We end up
23 focusing on the main control room and the switch gear
24 room where I still have loads driven off the batteries.
25 We look at the conditions that house the steam-driven

1 pumps, the RCIC pump rooms, the turbine aux. feedwater
2 pump rooms. So usually the main steam penetration
3 rooms where if there are operations there for the
4 atmosphere dump valves, etcetera. So we have the focus
5 areas that we zoom in on, but the licensees have
6 generally done a full evaluation and they've taken
7 actions that are built into their procedures in order
8 to maintain the equipment in a habitable condition.
9 Some of those were discussed earlier where they prop
10 open doors. And for many of the plants in the control
11 rooms they go and they open the back of the panels, the
12 control panels in order to keep the instrumentation
13 cool.
14 So we go through on a plant-specific basis
15 and look at the survivability of the Phase 1 equipment.
16 The Phase 2 equipment and even the Phase 3 equipment,
17 this is where the order requires reasonable protection.
18 I think we just talked a little bit about the buildings.
19 We also go through the deployment routes and the
20 deployment locations. I guess there were discussions
21 on that earlier this morning also about what happens
22 if it's next to a non-seismic building. We do look at
23 those considerations and where they're going to store
24 them and their ability to deploy that equipment in a
25 different location if that should become necessary.

1 MR. BOWMAN: One good example for the
2 Phase 1 equipment would be the discussion that Mr. Amway
3 had with you this morning about the condensate storage
4 tanks at Nine Mile Point. They are not seismic tanks,
5 but if they're there they're going to use them. What
6 we've seen at some licensees, they'll have specific
7 strategies to address specific hazards and if it was
8 a flooding hazard for which the condensate storage tank
9 that had the fault of being non-seismic, but was above
10 the flood level, they rely on the water in there,
11 whereas for a seismic hazard, they may rely on water
12 from a different tank.
13 CHAIRMAN SCHULTZ: Going through the
14 preference of water source listed --
15 MR. BOWMAN: Yes, typically, what we've
16 seen is going down the priority list and with the
17 response not obtained that day and the condensate
18 storage tank is no longer existent, then they switch
19 to a different water source or whatever the structure
20 system or component in question is.
21 CHAIRMAN SCHULTZ: The title of the slide
22 is the functionality post event and what we don't hear
23 a lot about is putting the equipment in service. In
24 other words, the equipment is in the shed and it's going
25 to connect here, but demonstrates that when you get to

1 that point with everything else that's going on, and
2 it's installed, that it will function for the time frame
3 that is required in order to do what we've asked this
4 project to do.
5 MR. BAILEY: That's fair. I guess we just
6 haven't shared that level of detail. We do look at the
7 hydraulic calcs --
8 CHAIRMAN SCHULTZ: Not the calcs. The
9 calcs are important. I'm talking about the ability to
10 set up that equipment on the one time event and it works.
11 MR. BOWEN: I think what you're getting
12 to -- some of this discussion goes to what we started
13 with is yes, there's the entry conditions, if you will,
14 of the standard loss of A/C power and loss of access
15 to the ultimate heat sink. But we're looking at it more
16 broadly of something caused that. What are the things
17 that could have potentially caused that and how long
18 could that something last? Could you still be in a
19 high-wind event six hours into this ELAP and you're
20 having to hook up equipment? Would you be able to do
21 that in those conditions? How long do you have margin
22 available such that if you didn't hook -- first of all,
23 is the equipment protected from the initial event
24 itself? Then to what degree is it protected and that
25 gets into the what's good enough?

1 Again 12-06 talks about the design basis
2 of the initial conditions, but we do ask a lot of
3 questions, oh, well, have you built in some margin
4 there, like I mentioned with the building? Yes, the
5 buildings are built to design basis, but there's some
6 margin already established in that.
7 Same sort of thing with the protection of
8 the equipment and the ability to put it in place where
9 it's needed to go, when it's needed to be there. Okay,
10 the strategy might say have that pump in place in six
11 hours, but when we look at what we're getting to with
12 the calcs, we look at the calcs as well to see well,
13 there may be some margin. It says, the strategy says
14 put it in place in six hours, but it may be that they
15 don't need it for 12 hours. So based on the kind of
16 a conglomeration of all these different factors, we may
17 look at and say okay, you can have less protection of
18 the deployment pathway and a longer deployment strategy
19 if you have longer margin. If you have a shorter
20 margin, we're going to ask a lot more questions about
21 well, how long does it take to get that equipment there?
22 What's the protection for that equipment? How do you
23 validate that you've actually put it in the conditions
24 it may exist, i.e., a high wind?
25 The main concern we're seeing with plants

1 for flooding is not necessarily river or ocean
2 flooding. It's local, intense precipitation. So
3 there's ponding at the site. You're protecting the
4 equipment. It's above the flood level. Where you're
5 deploying it is above the flood level, but how long does
6 the ponding last? And is it in your deployment route
7 and can you actually get it from Point A to Point B?
8 Or does the water recede in enough time such that you
9 can get it there when you need to get it there.
10 I hope that's getting to some of your
11 questions. We are looking into that, but it's very
12 much a site specific, situational based sort of line
13 of questioning. It very much depends on how
14 much -- what's the strategy being proposed? How much
15 margin is available? How time sensitive and how
16 critical is that piece of equipment or that action?
17 MR. DAVIS: The n+1 takes into account the
18 failure to operate kind of mentality that you're
19 talking about. I get it there and I go to turn it on
20 and something happens, it doesn't work.
21 MR. BOWMAN: The other thing and I'll
22 cover this in a few slides once Stu is done discussing
23 his portions, but the validation process that Mr.
24 Webster brought up, it addresses some of your concerns,
25 you know, can you actually bolt the discharge of the

1 pump to the hose to a place where it's supposed to be
2 delivering the flow? That's a validation process that
3 industry has put together and that they've embedded in
4 NEI-12-06 Revision 1. And a draft form currently has
5 them go through and do a physical check to see and also
6 walk down the paths, dragging the equipment with them
7 to ensure that yes, indeed, the trailer will fit between
8 those two buildings and that kind of thing.
9 What we were talking to here about --
10 CHAIRMAN SCHULTZ: Like personnel at 2 in
11 the morning.
12 MR. BOWMAN: It's the personnel that are
13 intended to be performing --
14 CHAIRMAN SCHULTZ: But there's 24 hours
15 there, so I guess there's an opportunity to do it during
16 the day.
17 MR. BOWEN: We also look at as we're going
18 out to the sites and we're actually seeing, interacting
19 more closely with the licensees and understanding a
20 little bit more the nuances that aren't written in the
21 guidance and in their plans, there's a lot more
22 of -- there is consideration for okay, the operator
23 aids, they have stuff that glows in the dark. They
24 thought about lighting. They thought about protection
25 of the operator while they're in the situation they'd

be in. What's the most optimal pathway of getting them there safely? What's the simplest operator action we can give them to do? So those sort of things I think Eric is going to get into it in a few minutes.

CHAIRMAN SCHULTZ: That will be good to hear. Thank you, Jeremy. I appreciate that.

MR. BAILEY: Let's go on to instrumentation, I guess. Instrumentation of this focus area -- instrumentation we treat very similarly, by and large, to the rest of the equipment in terms of the environmental conditions that it sees, so I don't want to spend much time on that. The guidance has them determine the minimum amount of instrumentation that is required for them to really control the systems and conduct their strategies. The reason that focuses on the minimum, of course, is so that they can do the greatest extent of battery shed that makes sense, load sense that makes sense to preserve that battery. That is one of the primary resources that they have available.

The qualification guidance that is put out there, the NEI-12-06 essentially points to the SBO guidance. When you look at what's actually being implemented at the plants, by and large, this is the post-accident monitoring instrumentation which is

1 governed by Reg. Guide 1.974 which meets the Reg. Guide
2 1.97.
3 When we're talking about the backup, the
4 backup is usually if there's some failure along the
5 circuit and they're typically identifying multiple
6 locations where they can get an indication of, for
7 example, a fluke meter and then having a table of
8 conversions that they can determine what is the actual
9 parameter in the plant. And the final backup for that
10 usually is they've done analysis of the timelines and
11 the sequence of events. That analysis includes what
12 are the required flow rates versus time, often with
13 corrections for different time power if there's a
14 concern about overfill. So the ultimate backup is
15 controlling the portable equipment and getting a flow
16 rate based on the analysis.
17 So the spent fuel pool instrumentation
18 qualification, without going into much detail due to
19 the lack of time here, I would just summarize all of
20 this to say that the order directs that the
21 instrumentation is designed to withstand the
22 conditions that are likely to be seen if you have the
23 loss of all spent fuel pool cooling and boil down. It's
24 looking at the environmental conditions of temperature
25 and humidity from a boiling pool and typically they're

1 doing a seven day integrated dose assuming that the pool
2 water level is that the top of the racks, that is the
3 Level 3. And all the licensees, all the vendors have
4 tested the sender and the associated electronics to
5 that dose rate, actually probably conservatively
6 determined dose rate and determined that
7 instrumentation to be okay.
8 The bottom line here you'll say it says to
9 look at the impact of the FLEX implementation
10 strategies. That is part of the guidance. If you look
11 at what's going on in the FLEX implementation
12 strategies, there really is not anything I've seen yet
13 that is going to impact this instrumentation.
14 Regarding the spent fuel pool, the presentation earlier
15 showed a plant with hard pipe. Generally speaking
16 though, what plants are doing early in the ELP sequence,
17 they're going out and they are pre-staging hoses over
18 the side of the pool. They are pre-staging spray
19 nozzles to protect the fuel assembly should the water
20 get that low. And they're setting themselves up so
21 that any actions that need to be taken long term can
22 be done from a habitable location usually further
23 below. They're opening doors. They're opening
24 louvers, things of that nature to support ventilation
25 in that area in anticipation of the boiling.

1 MEMBER REMPE: Stu, if you go back to 21.
2 I'm not fast enough sometimes.
3 MR. BAILEY: Okay.
4 MEMBER REMPE: But I see a lot of
5 differences in the different submittals from the
6 licensees on what they identify as critical
7 instrumentation. And do you attribute it to just the
8 way the plants are configured or how do you deal with
9 some of those things? Because like McGuire did
10 identify water level in the RWST and different sources
11 of water where other plants didn't. How do you deal
12 with that? And are all methods of submittals
13 acceptable?
14 MR. BAILEY: Well, by the time we're
15 finished, they're all acceptable. I'll put it that
16 way.
17 MEMBER REMPE: By definition, yes. How
18 are you dealing with that?
19 MR. BAILEY: Well, what we're doing is
20 we're bouncing that against the strategy that they're
21 implementing and what kind of controls are they trying
22 to take? What are the really sensitive -- what are the
23 critical parameters that they need to think about?
24 For the example that you heard this
25 morning, it's important for them to understand the

1 safety injection tank level and to monitor how that
2 trends, so that they can take actions to prevent
3 nitrogen injection into the reactor coolant system. A
4 plant with low leakage seals that doesn't drain down
5 similarly may not have that same limitation.
6 You're right. For some plants, they're
7 looking at RWST indications or condensate storage tank
8 indications. There are plants that leave that to a
9 local indication. Given the slim nature, given the
10 volumes associated with that and the slow drain down,
11 we would probably take a local indication of that to
12 be acceptable. We would bounce that against the
13 procedures to see whether they're getting out there as
14 necessary to monitor the levels and take appropriate
15 actions.
16 We look at the survivability of the
17 instruments. I didn't go into it in detail. We look
18 at the survivability of them for the events also in
19 terms of the tanks and the level indication. Is it
20 reliant upon a reference leg, a filled reference leg
21 that could be damaged by say a tornado missile. So we
22 view a wide range to see that the instrumentation that's
23 necessary to support their action is going to be usable
24 during the event.
25 MEMBER REMPE: What do you do for water

levels that rely on a reference leg? What do you use as a backup?

MR. BAILEY: So this has been a focus area and for the important water levels, I haven't seen it. It is typically a pressure sensor instead down in the vault under the tank. So I was looking for reference levels assuming that's what it was, but if there is one, there's at least always a backup that's just off pure pressure.

MEMBER REMPE: Okay.

MR. BOWEN: I think in some respects this also goes to the discussion we had a few minutes ago and that air is going to get through it. This is another one of those where we may ask a level of detailed questions depending on the strategy, depending on the equipment that's being used. If it's more, for lack of a better way of saying it, if it's more critical, we're going to ask a lot more about that piece of equipment and the instrumentation to make sure that that equipment is functional. If it's less critical, larger volume, larger time frame, redundancy, the level of review, the level -- not the level of review, but the amount of questions and the amount of in-depth discussion we may have might be a little bit less.

MR. BAILEY: For an example of that, I'm

1 looking at a plant, a plant out there had some critical
2 action, short-term actions in the main steam
3 penetration room. And so like many plants, if they
4 have to do operations in those rooms, their procedures
5 are to get out there early, open doors, open louvers,
6 provide some ventilation for this room.
7 So again, this is a critical area, so we
8 walked that down in some detail and essentially
9 identified that there were issues with the GOTHIC
10 analysis that had been done. We talked about the
11 chimney effect in this particular room. The steam
12 pipes are at a relatively high elevation and they were
13 relying on an open door about a story up and -- but if
14 you walk down the outside of the building, there's a
15 missile shield there that comes down to just about that
16 same elevation. So the chimney effect would be much
17 less than assumed. So that one is still under revision
18 and review, I think. This is just an example of where
19 things are important when we're on site, we're getting
20 into that level of detail.
21 MR. BOWMAN: Okay, this is Eric Bowman,
22 special advisor in the Japan Lessons Learned Division.
23 I had been before the committee a few times in 2012 and
24 2013 discussing the rulemaking, the then station
25 blackout mitigating strategies rulemaking, as well as

1 the guidance that we put together for the EA 12-049.
2 In June of 2013, the committee provided us
3 with a number of recommendations including the one on
4 this slide regarding our need to provide more guidance
5 on evaluating the feasibility and reliability of manual
6 actions. I believe that the committee reiterated this
7 recommendation in a subsequent letter, so we realized
8 you were really kind of serious about this.
9 CHAIRMAN SCHULTZ: And it's been repeated
10 today. So go ahead.
11 MR. BOWMAN: I'm starting to get the
12 message. What we have in NEI-12-06 currently, there's
13 the quote right here from Section 3.2.1.7, that's item
14 6 in that section. The licensees were supposed to
15 identify time constraints for which an action has to
16 be taken in order for those strategies to be successful
17 and provide a basis that they can reasonably meet that.
18 The way that was addressed in 12-06 and Section 11.4,
19 I believe it was, it was pointing to licensees would
20 validate that the strategies and the procedures that
21 they have developed to support the strategies can meet
22 what they needed to meet.
23 The time constraints were all identified
24 following the thermohydraulic analyses that the
25 licensees did to put together their integrated plans.

1 And they're all listed in the integrated plans in the
2 sequence of events.
3 You heard this morning discussion from Mr.
4 Webster from Dominion regarding validation that they
5 did at North Anna of using a process that NEI had put
6 together in conjunction with a number of
7 representatives from the industry. I had the
8 opportunity to take a look at the procedure they had
9 put together for that and observed the piloting of it
10 at North Anna in order to get a sense of what they were
11 looking at for that.
12 The validation process which has now been
13 included as Appendix E to the draft revision for
14 NEI-12-06, it's a supplement to a licensee's normal
15 procedure for verification of procedures and the
16 development of procedures. What it's looking at is
17 figuring out the time that's necessary to accomplish
18 an action so they can compare it to the time that it
19 has to be done within and determine whether or not
20 there's sufficient time margin to believe that they can
21 actually accomplish the action in the time that's
22 available.
23 After discussions with the working group
24 that was putting together the process, and their own
25 look at what was put together for the integrated

1 assessments for the flooding hazard reevaluation, and
2 your recommendations in the prior letters that we
3 discussed earlier, they've incorporated a number of the
4 performance-shaping factors from NUREG-1852 on the
5 determination and feasibility of actions for fire
6 protection as well as those that are in the interim
7 staff guidance for the flooding integrated assessment.
8 They're being looked at at a fairly
9 qualitative level, not a strict identification that
10 individual performance shaping factors are either
11 nominal or degraded. And that is really a result of
12 the situation we're in with we don't have an identified
13 hazard that leads to the loss of all alternating current
14 power and the loss of normal access to the ultimate heat
15 sink.
16 Walking through the procedures with the
17 operators at North Anna, however, they were conducting
18 pre-job briefs regarding what are the external hazards
19 that are applicable to the site, what kinds of things
20 should the operators be looking for to see. I think
21 it was either Stewart or Jeremy mentioned local intense
22 precipitation can lead to water levels so high and they
23 have determined, they have a sense of how high the
24 flooding hazard reevaluation is going to show a
25 potential for local intense precipitation. And they

1 can get a qualitative estimate of would it be possible
2 to actually drag this pump across this particular
3 towpath if there were to have been a local intense
4 precipitation event there.
5 MR. BOWEN: I'll give you a perfect
6 example. We were just down at St. Lucie late last week.
7 That is their flooding of concern is from local intense
8 precipitation. They have ponding on the site, storm
9 surges and everything else from hurricanes. It
10 actually dissipates rather quickly. The local intense
11 precipitation, they get ponding. Where they put their
12 FLEX storage building, they put in some margin about
13 a foot and a half above their flood level, if you will.
14 And we asked questions about getting that
15 equipment from the storage building to the location
16 that would be used on site and going through any ponding
17 and everything. And the fact that it's on trailer,
18 they've already validated or done some analysis and
19 they're going to validate that the trailer provides
20 another two feet of pipe, if you will, to get through
21 and they're only expecting a couple of inches of
22 ponding. So they could get through that local ponding
23 that would occur because of the local intense
24 precipitation.
25 So it's one of those -- there's multiple

1 ways to deal with it. It's going to be site specific.
2 In some cases, it may be time based. In some cases,
3 it may be okay, there's other ways to deal with that.
4 MR. BOWMAN: The other types of hazards
5 that they looked at, the high wind hazard and the
6 potential --
7 CHAIRMAN SCHULTZ: How is all this
8 captured? You talked about where we went and we talked
9 and you said qualitative and there's some sort of
10 guidance --
11 MEMBER STETKAR: Right, is that captured
12 in the audit report or the licensee document what
13 they've determined?
14 MR. BAILEY: The licensees are
15 documenting it typically in a technical report that
16 provides the basis for them submitting to us the letter
17 saying that I'm in compliance now.
18 MEMBER STETKAR: But I mean do they
19 perform what I would call a feasibility assessment,
20 document it, and then document the margins that are
21 available? Will they have to submit that it's
22 available for audit?
23 MR. BOWMAN: Yes, that's the result. I
24 believe that Bill had in his presentation -- one
25 example, a page that was excerpted from it. I've taken

1 a look at it. The technical document is 150 some odd
2 pages and it's got the time margins as well as
3 allowances that they added for things like clearing
4 debris, walking through the procedures with the
5 operators and maintenance personnel that were
6 accomplishing them. They thought of things such as a
7 high wind event could have blown the concertina wire
8 off of the fence that's nearby and they would have
9 needed to bring over debris-clearance equipment and
10 move it out of the way in order to move a pump in place.
11 Things like that. And identified non-seismic walls
12 that they were then considering would it be better to
13 just have that non-seismic wall that's no longer really
14 necessary removed so that it could not cause a debris
15 hazard in a seismic event.
16 MR. BOWEN: I think to get to your
17 question, almost universally, in every interim staff
18 evaluation we did, there was a confirmatory item about
19 licensees' validation activities. And as they're
20 being completed, depending on the timing of the audit,
21 and whether you're looking at it on site or licensees
22 are putting that sort of information on the e-portal
23 and we're looking at it as it is available there. So
24 it's being captured in the audit reports and if it's
25 still not 100 percent complete by the time of the audit

1 report, then it's carried as an item through to their
2 safety evaluation.
3 MR. BOWMAN: And it may be -- it will be
4 available for us to look at during the confirmatory
5 inspections, as well as compliance.
6 The final portion of the validation
7 process is a rollup of the resources and personnel to
8 ensure that they've got -- they haven't double counted
9 the availability of the tow vehicle or the number of
10 staff that are available to accomplish the tasks.
11 As Mr. Webster mentioned, they have it set
12 up for Level A, Level B, Level C type of approach with
13 Level A being time-sensitive actions in the first six
14 hours before additional staffing gets on site. And
15 after that, there's a slightly less rigorous Level B
16 validations that have a variety of different methods
17 that are available for accomplishment.
18 MEMBER STETKAR: At the moment, are they
19 doing that on a per unit or a per site basis?
20 MR. BOWMAN: They're doing it on a per unit
21 basis because it's including dragging the hoses out,
22 seeing how many links of hose it takes to go from where
23 the pump is going to be put to where it's supposed to
24 be connected, and actually ensuring that the hoses, the
25 connectors will meet up.

1 MEMBER STETKAR: I was asking more in
2 terms of the staffing availability.
3 MR. BOWMAN: I've discussed with some
4 licensees. They're actually doing resource load time
5 schedule site wide and some of them are using
6 spreadsheets, but it's all on a site-wide basis. It
7 may be done, for example, at North Anna, only one of
8 the units is in compliance now. They don't necessarily
9 have to have the staffing available for both units until
10 the second unit comes into compliance. So --
11 MEMBER STETKAR: The only concern is
12 double counting for people.
13 MR. BOWMAN: No double counting.
14 MR. BAILEY: No, we're not seeing a double
15 counting. The staffing associate -- it looks at the
16 entire site and the actions on each unit. And then
17 shared which would be things like debris removal.
18 MR. BOWEN: The only unique aspects where
19 that might go to a unit is the units are two different
20 technologies and they need different staffing
21 requirements.
22 MR. BOWMAN: But then it would be with
23 staffing they're drawing from and they would also be
24 needing to point to site-wide staffing similar to, as
25 Mr. Eimar discussed, the Area 9 operator.

1 MEMBER STETKAR: Area 9 is one, but I've
2 seen staffing plans and we've questioned on some new
3 plant applications where you might have two units at
4 the site and you're allowed, by the rules, to share a
5 technical advisor between the two of them. So you have
6 one for two units, for example. And if you're relying
7 on that shift technical advisor for active involvement,
8 as we heard this morning, you can't take a chain saw
9 to them. I was just curious whether they were looking
10 at that.
11 MR. BOWMAN: They are.
12 MEMBER STETKAR: Okay.
13 MR. BOWMAN: They have made a lot of good
14 observations. North Anna identified incompatible
15 fittings that they hadn't expected to come up with as
16 well as they had some gasket issues. They corrected
17 them. The nice thing about the validation process is
18 there's a natural feedback loop. If they're talking
19 about a procedure and they come across a problem like
20 this, they have to fix it before they can actually
21 finish implementing the procedure. And as I
22 discussed, the potential source of debris.
23 Right now, as I mentioned, it's a
24 qualitative look at the performance-shaping factors.
25 Depending on the outcome of the draft COMSECY and the

way we address the reevaluated flooding hazards or any other hazards for that sake, we may need to go to look more towards feasibility and reliability rather than merely feasibility. And we'll have further discussions with industry and no doubt come back and interact with the committee on how we do that.

MEMBER STETKAR: Some guidance in terms of assessing, you know, available time margin is a surrogate for reliability.

MR. BOWMAN: Right, and there is a feedback in the process as it's written right now when they are short of available time margins, they look at doing a more rigorous look to be sure that that time margin actually exists by doing repeated performance or performance with other individuals.

MR. BOWEN: If I could tie this back to the discussion we were having about 15 minutes ago, I think a key aspect is that the validation activities, licensees are going as far as possible with actually implementing the processes or strategies, hooking up, making connections as far as possible without actually introducing an unsafe condition for the plant; physically hooking up hoses, running hoses, physically making the connections, obviously not running the water, that sort of stuff. Same thing for the perfect

1 concepts -- that was done at the response centers.
2 They put a pump on a trailer. They physically drove
3 it from Memphis to Three Mile Island at Surrey. They
4 took it off. They actually opened it up, went through
5 the process of how they would start up the pump, that
6 sort of stuff. There's a recognition in all of that.
7 You gain some insights. You gain some understanding
8 and then also tying that into well, it's a sunny day,
9 ideal conditions operating. So you factor that in with
10 how much margin was there, what other factors do we need
11 to consider that first stuff.
12 So back to the discussion from a few
13 minutes ago, it's all a part of a larger evaluation the
14 staff is doing. It's not -- I can't say we point to
15 one thing and that's how we make our determination on
16 that one thing. It's a collective review of the whole
17 strategy.
18 MR. BAILEY: I think you can say also it's
19 understood that it's an undefined event and it could
20 be a very stressful event. There really is an effort
21 out there to make the actions that need to be taken as
22 simple as possible to make operation of the equipment
23 as simple as possible. When you saw Mr. Webster's
24 presentation, they've got the glow in the dark beyond
25 design basis, little reflectors, I guess. It reflects

1 and glows in the dark on all the equipment locations
2 so that it will be easier to find at the time. Most
3 plants are putting basically highlighting what needs
4 to be tripped on a load shed. So they're not actually
5 going through and doing the load shed, but they're
6 putting in all the operator aids to make this as -- to
7 make this as easy as possible, understanding that the
8 event will be stressful.
9 MR. BOWMAN: And Dominion went as far as
10 to -- for the flexible hoses they chose to use the
11 storage connectors which are the standard industry
12 connectors, but they specifically sought the ones with
13 the latches which is not necessarily a feature of a
14 typical storage connector below five inches because
15 that gives the operators a positive feedback for the
16 cues and indications that they've successfully made up
17 the connector because it quakes and it can't be backed
18 off. And that's the kind of thing that they're
19 documenting in their validation. They've also
20 in addition to the external hazards that's screened in
21 for this site, they looked at how they could accomplish
22 the actions in a low-light environment, testing the
23 light packages that were installed on the tractors,
24 they're using for towing the equipment around, and
25 things like that, just to show -- to provide a greater

1 degree of confidence in the feasibility, if not the
2 reliability, of the action. And the only reason I
3 can't call it reliable is because I don't have defined
4 hazard and they can't go through and say with certainty,
5 yes, this is a nominal capability as opposed to a
6 degraded capability.
7 CHAIRMAN SCHULTZ: Eric, the phrase "this
8 is an expected part of the process" leads me to think
9 that one usually gets what you expect to get or where
10 you set your expectations. Therefore, there's a piece
11 of that that's a disappointment, given what one would
12 think this would be in terms of importance and in terms
13 of investment in compatible fitness. You know, you
14 hope in the industry that you had that covered if you
15 were going to buy one thing to fit another. And that's
16 what I was getting to before in terms of making sure,
17 making sure, that what we're setting out to do is going
18 to be effective when it's implemented.
19 One would expect this is not going to
20 happen very many times. And if it happens one time and
21 it's not successful, you have to start all over. It's
22 a bad, bad day.
23 (Simultaneous Speaking.)
24 MR. BOWMAN: -- but bear in mind there's
25 also the phrase that you can expect what you inspect

1 and we've got confirmatory inspections coming up at the
2 end of this when we can take a look at how thorough a
3 job did they do with the validations.
4 MEMBER CORRADINI: But you had said, I
5 think, that you had said that currently the thinking
6 process was about every eight years to exercises in the
7 drill mode. Maybe I misheard you.
8 MR. BOWMAN: Right now, the guidance in
9 NEI-12-06 says they'll do a driller exercise every
10 eight years. It lines up well with the emergency
11 preparedness exercises although they aren't required
12 to be done as part of the emergency preparedness
13 exercises.
14 MEMBER CORRADINI: Is that the frequency
15 for regional emergency preparedness or national?
16 MR. BOWMAN: That's the frequency in which
17 the EP exercises require licensees to go through and
18 demonstrate individual elements of the emergency
19 preparedness plan that includes -- currently, it
20 includes the B5B strategies.
21 With the mitigation of beyond design basis
22 external event, rulemaking, we're looking at is that
23 still the appropriate place to put it. We're
24 considering moving it to a different section but
25 retaining the eight-year period as a demonstration of

1 the capabilities.

2 MEMBER CORRADINI: I guess I'm not

3 familiar with all the details, but I guess given that

4 kind of where Steve was going if it really is in a really

5 bad day, that means other agencies will be involved and

6 this other governmental -- so I think you've rolled it

7 into some sort of drill which involves other agencies.

8 So what is the frequency of those emergency planning

9 exercises?

10 MR. BOWMAN: I'm not sure exactly what it

11 is for the EP exercises. I don't anticipate that -- I

12 believe he had discussed actually going through an

13 actual evacuation to see if it would work during an

14 evacuation. We aren't going to go that deep. But we

15 will do some of the command and control aspects of it.

16 The mitigating strategies and the delivery of equipment

17 from the National Safety Response Centers, I believe,

18 is going to be a portion of the exercise Southern

19 Exposure next year. So it's not going to be every

20 licensee is going to go through and --

21 MEMBER CORRADINI: I understand that. I

22 understand that.

23 MR. BOWMAN: Some of them, it's on the

24 horizon it's something that we're doing. It's being

25 included in the nuclear sector, national response

capability.

MR. BOWEN: And although we may not do a soup to nuts exercise of the frequency that's being determined, there may be a different frequency that's shorter which we're going to inspect and certain aspects of this will be -- licensees will have to demonstrate that as part of the inspection process, actually, show me the pump, show me that -- show me -- walk down the battery of load shift procedures, that sort of stuff. That's part of the temporary instruction now that's likely part of the on-going inspection procedure that we will develop.

MR. BOWMAN: Yes, I'm not sure if you're familiar with it, but the way the B5B mitigating strategies are being inspected is they've been incorporated in one of the triennial inspections and inspectors typically go out, select an auxiliary operator, hand them the procedure and say okay, show me you can do this. And that gives us a level of confidence that the random individual who is on shift when the event happens is capable of following the procedure and doing the actions that he's supposed to be able to do.

MEMBER BLEY: How long have we been doing that?

1 MR. BOWMAN: Since 2009.

2 MEMBER BALLINGER: This type of event

3 would be a site-wide event, obviously. How does the

4 frequency of doing the drill or whatever you're doing

5 square with the refresh rate of the staff? Is it likely

6 that eight years from X, there ain't nobody that worked

7 there?

8 MR. BOWMAN: I'd point to the individuals

9 that were here from industry --

10 CHAIRMAN SCHULTZ: They're coming back

11 up, so we'll put that on their punch list.

12 MR. BOWMAN: Gene Eimar was at Palo Verde

13 since 1985.

14 MEMBER BALLINGER: I've been at MIT since

15 1982, but that doesn't mean that everybody else has been

16 there, all right?

17 MR. BOWMAN: I understand.

18 MEMBER CORRADINI: Do you remember what

19 you're supposed to do?

20 MEMBER BALLINGER: Correct --

21 (Laughter.)

22 MR. BOWMAN: Part of it is that there's

23 supposed to be, in fact, the NEI-12-06 sequence to the

24 systematic approach to training and the use of the

25 systematic approach to training for the personnel that

1 are assigned to implement the strategies. Similarly,
2 where it is pointing to the systems approach training
3 as defined in 55.4 are in the preliminary proposed rule
4 language.
5 MR. BOWEN: In some respects that gets a
6 little bit into the normal regulatory processes of how
7 the NRC oversees the licensees' continual training,
8 learning program and yes, Eric mentioned we're trying
9 to figure out the appropriate time for the regulatory
10 required drills and exercise, but if we go do an
11 inspection and find that if the licensee can't
12 demonstrate a strategy, then that's an issue with their
13 training program that that may identify a larger issue.
14 That's part of our normal oversight process. We start
15 to kind of -- we're talking a little bit apples and
16 oranges here, two different topics. but I think there's
17 aspects to both that need to be worked out, but --
18 MR. BOWMAN: And the other thing that we
19 do recognize that there has to be a balance between the
20 periodicity at which licensees do these drills and
21 exercises and beyond design basis nature of the events
22 that we're talking about we don't want to displace to
23 too great an extent the amount of time that licensees
24 have available to train on the use of emergency
25 operating procedures and so forth for things that we

actually expect to happen a lot more frequently than this.

CHAIRMAN SCHULTZ: Those are both good points, but as I said the licensees are going to come back up and one of the things that I would like them to address is what I would consider to be the expectation that since the review process on a site-specific basis might be every eight years, well, how -- and I know the industry has practices like this, so how the findings from Site A are translated to the rest of the industry. I think this is, of course, an opportunity to be sure that the communication about what was the experience, what are the lessons learned and how are they applied throughout all this as a result of one site's experience would be very important.

I saw that you've gotten to the final slide, the thank you slide. The acronyms are less, so you don't have any additional slides.

I'll ask members of the committee, any other questions of the staff?

MEMBER STETKAR: I actually have one off-the-wall one. I was trying to do some homework in real time. Have you seen, and I know you haven't looked at all of them, have you seen any plants where the time constants and I'll just characterize it that way

are -- depend on things other than reactor coolant pump seal leakage. I'm talking about pressurized water reactors. You flash a slide up there saying everybody knows the reactor coolant pump seal leakage is the big issue. It may or it may not depending on a particular plant design.

MR. BAILEY: For reactor coolant make up, no, that's been the primary driver. Now obviously, that's a little bit different for each type of plant and the plants with the shortest time are the B&Ws, trying to make sure that they do not get any voids in the U bend.

MEMBER STETKAR: Have you seen any plants with only motor operated isolation valves on their normal let-down lines with relief valves that go back to other places upstream of the next available isolation valve in the auxiliary building and have you looked for that to be specific?

MEMBER CORRADINI: To be specific.

MR. BAILEY: I have not seen that.

MEMBER STETKAR: I mean it can go to a drain tank some place. Some of them put them back in the containment, you know. They don't put them on the floor.

MR. BAILEY: Well, I haven't seen all

1 that. Now usually this relief valve is going to
2 relieve that RCS pressure or greater, but generally,
3 we're looking at a depressurizing trend.
4 MEMBER STETKAR: You are, but the rate at
5 which you depressurize and the amount of time you have
6 available to depressurize before you get steam out into
7 the hot legs depends on how much water is going out.
8 MR. BOWEN: That is true. So there could
9 be a relief path there.
10 MEMBER STETKAR: That's why I asked you
11 the time line. I was just curious, whether anybody is
12 coming in and said if we don't isolate -- we have to
13 manually isolate the let-down line out here some place.
14 MR. BAILEY: I have not seen anybody have
15 to take an action to isolate.
16 MEMBER STETKAR: Because I have seen
17 plants in my life that have only motor-operated valves
18 only located inside the containment.
19 MR. BAILEY: Now whether that's because
20 under the guidance that would be an additional failure
21 that is not typically looked at.
22 MEMBER STETKAR: It is not an additional
23 failure. Remember, I said motor-operated valves that
24 would require AC power. Now under normal station
25 blackout, your standard regulatory station blackout,

1 that's not an issue because they get the station
2 blackout diesel running and they get power to one of
3 those two valves.
4 MR. BAILEY: I have not seen --
5 MEMBER STETKAR: -- under an extended --
6 MR. BAILEY: -- I have not seen --
7 (Simultaneous Speaking.)
8 MEMBER STETKAR: -- that's why I was
9 asking whether anybody --
10 MR. BAILEY: I've seen people take actions
11 to go and isolate. I've not seen anybody that has --
12 MEMBER STETKAR: It depends where the
13 relief valves are. I've seen different designs. This
14 is not necessarily, by the way, in the U.S. I'm asking
15 this as an honest question, but raise it -- I haven't
16 seen every one.
17 MEMBER CORRADINI: I thought you were
18 setting it up.
19 MEMBER STETKAR: No, no.
20 MR. BOWEN: I can't say for certainty
21 where no plants have that situation, but it's such an
22 unusual circumstance that there's been a lot of
23 different strategies that have been presented. I feel
24 that that's -- something like that would have
25 --

1 MEMBER STETKAR: You would hope, wouldn't
2 you, that somebody --
3 (Simultaneous Speaking.)
4 MR. BOWEN: -- by now.
5 MEMBER STETKAR: I was just curious. I
6 was kind of trying poll you all, because the folks
7 coming back up, I'm going to ask them the same question.
8 MEMBER RAY: Are we done?
9 CHAIRMAN SCHULTZ: No, John is done. I
10 think.
11 MEMBER RAY: I just think Eric made an
12 important point that I wanted to underscore which is
13 all of this in most cases, I won't say all, is competing
14 with for time and attention, training. The stuff that
15 we count on to avoid getting into this situation that
16 we're talking about often, at least with regard to
17 internally. And that has to be something we're
18 cognizant of because the emphasis that you can -- and
19 Jerry put in this area, is almost without limit by
20 definition. And it has to be constrained somehow by
21 some notion of how much is enough because we could sit
22 here and do this forever. And yet, on the other hand,
23 you can't underplay or fail to provide enough emphasis
24 to it. So one of the things -- at least I'm trying to
25 get a feel for is how that balance should be struck

1 between making sure you operate the plant properly in
2 accordance with normal and emergency operating
3 procedures and how skillful you are in connecting up
4 these FLEX devices under circumstances that we hope
5 will never exist. That's all. I appreciate it.
6 Because he made that comment and I thought it was a good
7 one.
8 CHAIRMAN SCHULTZ: And certainly worthy
9 of emphasis. Others for the staff? I'm going to have
10 a -- I'm going to suggest we have a five-minute recess
11 just to stand up as the industry changes out there.
12 We'll be off the record for five minutes and we'll come
13 back at quarter of.
14 (Whereupon, the above-entitled matter
15 went off the record at 4:40 p.m. and resumed at 4:46
16 p.m.)
17 CHAIRMAN SCHULTZ: We'll bring the
18 meeting back in from recess and this is the opportunity
19 as we've provided on the agenda for industry to respond
20 to what we heard from the staff and provide any added
21 comments that you'd like to bring forward.
22 There were a couple of issues that came up
23 during our discussion with the staff that we kind of
24 put in a reserve box for you to respond to and so, we
25 might just start with those and I'm sure members of the

1 committee will have a few other questions.
2 But, do you have comments first that you'd
3 like to present based on what the staff has been doing
4 with regard to the inspections and reviews?
5 MR. BAUER: Well, I asked these guys to
6 come back up here because they've all
7 experienced -- they've been, you know, through this
8 audit process, obviously, to the culmination point of
9 it. So, I was just going to ask them to share their
10 remarks in that regard.
11 Now, what I would start with is, you know,
12 originally, we were going down the process of RAI
13 questions coming out and formally on the docket going
14 back and forth and responding to all this stuff.
15 And my personal feeling is, have you stayed
16 that course? We would have been hard pressed to
17 implement the full 14 plants this year.
18 So, the audit process is significantly
19 benefitted the speed with which we had to do all the
20 work we had to do. But, I also -- and to its credit,
21 I believe there's been a very effective process for,
22 you know, airing all the issues. The licensees
23 originally sent in their integrated plans, overall
24 integrated plans.
25 They got back this huge, as you know, they

1 were alluding to this, huge matrix of how do I compare
2 what the licensee said with what the requirement is?
3 And so, we spent marathon phone calls
4 basically going through those lists to try to parse out
5 each of the issues.
6 A lot of issues got resolved that way
7 because there was, you know, just more clarity was
8 needed to be provided by what the licensee was doing.
9 So then that weeded -- then the ISE came out, the Interim
10 Staff Evaluation, which basically gave them the first
11 docketed set of opening confirmatory items.
12 So, then the plants began to post answers
13 to those to the e-portal and basically worked
14 systematically through resolving those issues leading
15 up to the audit and then they tried to, you know, clearly
16 close the issues in the audit. And then subsequently,
17 the audit moving toward implementation they were
18 working at closing their remaining items.
19 So, it was a very effective process. It
20 clearly put out on the table what the issues were. It
21 was quite clear what needed to be done.
22 So, I think overall, it was very effective.
23 A lot of people trying to do a lot of work, so trying
24 to get resources sometimes, you know, get attention of
25 resources was challenging but we worked through that

1 pretty much.

2 And so, again, I would just say that, you

3 know, had we not used that process, I don't think we'd

4 have six plants right now that have basically been

5 implemented.

6 MR. AMWAY: I guess I'll start off. I

7 think I'm probably one of the most recent ones to go

8 through an audit and I was a little skeptical at first

9 because, you know, most of the time when they come to

10 a site, they're looking at, even though it's a dual unit

11 site, it's similar technologies. And so, what they

12 look at for one unit pretty much applies to the other

13 unit even though the implementation time frame's

14 different.

15 For us, it was different technologies, so

16 it was almost like two separate audits in terms of the

17 questions that were asked. Obviously, there's some

18 generic ones that fit across units but there was

19 definitely a lot of plant specific.

20 And the process that we were able to get

21 the audit questions two to three weeks ahead of the

22 audit, gave us time as licensee's to prepare responses

23 to those questions, gather together the necessary

24 documentation. So, it gave it us time to get

25 everything together in both hard copy format and

electronically. The staff certainly did their homework ensuring that they had they questions outlined before they came.

You know, the slide I showed at the end of my presentation, they came with somewhere in the mid-50s throughout the whole audit week, there was only three additional ones that were asked.

And we can see it through the Exelon fleet, our first one was a Byron and we developed a process and we've been able to make consistent improvements because of the consistency of the audits from site to site. So, we know what to expect before they come, we can get everything ready and I was certainly pleasantly pleased to get at the end of the audit that we had covered everything that they wanted to see, that we got as far as we could with the existing open items to get as many closed as possible before they left then we had a clear picture of what we had to do between the end of the audit and implementation.

CHAIRMAN SCHULTZ: Is the documentation process that the electronic bulletin board and all of this, not only with the audits, but also in the processes, is that capturing enough information so that other licensees are learning what they need to do? Those that haven't been through the process yet?

1 You mentioned RAIs and that was
2 cumbersome, but it also, in other cases, provides
3 licensees with, oh, that's what I need to do, I see what
4 the RAIs and the responses are and that's what I'm going
5 to do. I'm going to make sure I've got those covered.
6 MR. AMWAY: I think in terms of two ways,
7 you know, being within a large fleet where we have 20
8 some --
9 CHAIRMAN SCHULTZ: Well, the fleet, I
10 understand, but you're going to be communicating,
11 but --
12 MR. AMWAY: But also within the industry,
13 we have routine forums where we can share with each
14 other, you know, what we got on our audit, we share with
15 other plants.
16 CHAIRMAN SCHULTZ: Good.
17 MR. AMWAY: Scott, you may have some
18 more --
19 MR. BAUER: Yes, there's --
20 MR. AMWAY: -- from your end there.
21 MR. BAUER: -- two weekly industry calls
22 where, you know 80 to 100 people are on the phone and
23 so people share what's going on. Typically, we'll
24 share the things that were unexpected. So, a lot of
25 times they'll say, well, they raised this issue, we

1 don't understand the issue or we don't think it's a
2 right issue.
3 So, they'll raise it at the forum.
4 Typically, we all see those emails and then if I see
5 something that I think is a generic issue that warrants
6 a generic response, I'll pull our taskforce together,
7 we'll talk about the issue and then we'll give feedback
8 to the staff.
9 So, there's been a couple, we're working
10 on one right now. But there's been a couple of issues
11 where we're working through those audit issues and I'm
12 not sure where we've been as good at sharing all of the
13 audit information within the industry as we might be.
14 But I think plants, you know, and Mike and Bill can speak
15 to this too, I think the plants are getting enough
16 information that they are well prepared for the audits
17 when they come to their site.
18 MR. POWELL: There is, on these industry
19 phone calls, there's quite a bit of sharing of
20 information. In fact, I was asked to participate in
21 a call with the USA Alliance on the audit both on our
22 preparation for the audit and how they -- what were the
23 findings from the audit -- the preliminary findings
24 because I had this call before we got our formal audit
25 report.

1 People are wanting to learn, they're
2 wanting to, hey, what can I do different? How can I
3 prepare? How many man hours did it take you to prepare
4 for the audit? What size teams did you have? What
5 kind of questions did the NRC go into?
6 And a lot of strong dialogue, in fact,
7 there's actually a third phone call that's hosted by
8 Chuck Behrend from Exelon at the director level where
9 we share this kind of information and we talk about what
10 we can do to prepare.
11 MR. BOWEN: If I could, this is Jeremy
12 Bowen from the staff.
13 We actually just got a request from one of
14 the licensees not represented here earlier this week
15 and they actually asked us if we could start putting
16 the audit reports in a centrally located public
17 website.
18 So, that's actually something I hadn't
19 shared with these folks yet, but we're taking that back
20 and we're working on doing that as well. So, the audit
21 reports, ISEs and all of that information will be in
22 a central location going forward as well. So,
23 hopefully also provides some information as well.
24 CHAIRMAN SCHULTZ: Good, thank you.
25 MR. POWELL: There's also a biweekly phone

1 call hosted by a gentleman from Southern Nuclear, David
2 Hall. And we started out only discussing the fall '14
3 plants and that call has now transitioned to the spring
4 of 2015 and the fall of 2015, not only talking about
5 the audits, but lessons learned from implementation,
6 what level of training did we do.
7 And he's actually started a SharePoint
8 website as well where public information and audit
9 reports and presentations that the utilities have given
10 and providing that information or making it available
11 to everyone who has access to that SharePoint site.
12 And if people don't have access, he will
13 get them access and get them a pass code to get there.
14 MR. WEBSTER: The only thing I would add
15 to that is even, you know, like I went to the Palo Verde
16 audit before the North Anna audit and people came to
17 North Anna. So we also, in addition to that, actually
18 visited the audit and watched the audit and collect
19 things during that process so we share information in
20 the industry that was as well.
21 MR. POWELL: One of the things we did at
22 Palo Verde is we invited the NEI taskforce from FLEX
23 and a lot of the core team members to come observe the
24 audit but also give us feedback. Give us feedback on
25 if they thought our strategies were in the wrong

1 direction, if they saw some gaps and we wanted to get
2 feedback not only from the staff but also from the
3 industry, we're one of the -- we are the second audit
4 to be conducted.
5 I thought the audits were very
6 challenging, very rigorous. We spent about a thousand
7 man hours preparing. We walked down our strategies.
8 One of the goals of our audit was we wanted
9 to minimize the number of open items and confirmatory
10 items when the team left. But we also wanted to
11 demonstrate that we were horizontally and vertically
12 integrated, that it wasn't just the Fukushima response
13 team that understood the strategies, it was the fire
14 department, it was the auxiliary operators as well as
15 the SROs like Gene Eimar who gave the presentation
16 today.
17 MEMBER RAY: This is taking place in
18 regulatory space, so it's appropriate for NEI to be the
19 industry facilitator.
20 Can anybody comment on what INPO's rule
21 long term is? In other words, will they see this as
22 just an extension of the operating domain that they are
23 interested in following on behalf of the industry or
24 do they have any different view? Does anybody know?
25 I realize they're not here, you can't speak

1 for them, but I'm --

2 MR. POWELL: I don't think they have a

3 different view, but they have been helpful in other ways

4 by forming industry teams. And I'll use an example,

5 there was a team called the Emergency Response Training

6 Development Working Group and it's made up of industry

7 people. Both the owners groups have reps and there's

8 a mixture of FLEX professionals, training managers, EP

9 personnel and then an INPO team manager from the

10 training area on there.

11 That team was developed, the writer's

12 guide for how to write the operating aids, we even used

13 a pilot plant and picked -- and went through several

14 different types of color pages and font sizes to pick

15 the right color and font size to use.

16 That team was developed, the NANTel

17 training, open basic FLEX and advanced FLEX and they're

18 currently working on a training module called Decision

19 Making Under Stress to add to the toolbox.

20 And that training is -- I sat through a

21 pilot at INPO and they're piloting through one of the

22 senior nuclear plant manager classes this month.

23 MEMBER RAY: Will it be part of

24 accreditation? Do you have any idea?

25 MR. POWELL: I don't have any idea on that.

1 MR. BAUER: The other thing that INPO's
2 been doing is they're doing emergency response review
3 visits at the sites basically to check their
4 implementation of one of the IERs and it's highly
5 congruous with what the audit does. They're really
6 looking at a lot of the FLEX stuff.
7 So, we've been trying to populate their
8 ERRV teams with people from our core taskforce to
9 basically make sure that we're asking the right
10 questions and we're not diverging in what we're trying
11 to do there.
12 So, I went to the -- I was on the team for
13 the Robinson ERRV visit and I was able to look at the
14 Robinson strategies and give them some direction as to
15 how to --
16 MEMBER RAY: So, it's basically from what
17 you're saying, I would infer it's just an extension of
18 emergency response from an operational standpoint,
19 from INPO's standpoint? It's larger.
20 MR. BAUER: Yes, INPO, I mean they
21 modified their emergency response center down there at
22 INPO, so they're more aligned and ready to be an
23 assistant to the industry during an emergency response
24 event.
25 There's also now a requirement in

1 the -- that INPO be notified within the first hour of
2 an event.
3 MEMBER RAY: Okay, that answers the
4 question.
5 MR. BAUER: Actually, hold on. They have
6 people on shift with pagers similar to utility
7 personnel at any plant. So, there's a call out roster
8 assigned and a duty week so that they can man that
9 center.
10 MEMBER RAY: Yes, but that may or may not
11 include the kind of things we've been talking about
12 today.
13 MR. BAUER: Well, let me give you one FLEX
14 example that's very, very specific to FLEX. So, one
15 of the comments we got on the two National SAFER
16 Response Centers was, well can two really, you know,
17 meet the needs of the United States in total?
18 So, one of the things that the chief
19 nuclear officers decided to do was say, well, we really
20 have 64 sites that can all serve as, you know, response
21 centers. So, what INPO has done is they've inventoried
22 all of the equipment that the plants have bought and
23 they have that in their system and the plants are
24 required to keep that up to date.
25 And in an event, they're going to call, you

1 know, if Palo Verde has a problem, they're going to call
2 Diablo Canyon and say, hey, shut two pumps over while
3 the response centers are also doing their thing.
4 So, they're going to basically activate
5 the other response centers over to the other sites so
6 they can help.
7 MR. WEBSTER: Yes, I think INPO was also
8 involved early on because I mentioned in my response
9 that when we were responding to 11-4 even before the
10 order was, it gave us the -- some of the background work
11 that was done prior to the order and, you know, the
12 mitigating strategies that we developed.
13 So, they've been kind of working sometimes
14 in advance, you know, in conjunction with the process.
15 CHAIRMAN SCHULTZ: I was expecting that
16 INPO would be the response organization that would help
17 with those lessons learned from the emergency
18 preparedness exercise and drills and so forth that
19 could incorporate this. The lessons learned would be
20 shared going forward long term within that program.
21 MR. BAUER: You know, there is a
22 subcommittee of the Fukushima Response Steering
23 Committee which are the chief nuclear officers called
24 the Emergency Response Steering Committee and
25 basically, that involves INPO, chief nuclear officers

1 and NEI to basically say, hey, let's make sure we're
2 consistent with what we're doing in the emergency
3 response arena.
4 So, they're trying to, you know, make sure
5 everything there is done, nothing is done in conflict
6 with something somebody else is doing.
7 MR. POWELL: Yes, the other thing we've
8 done is we've had workshops. So as we started out with
9 FLEX in its infancy and as we took conceptual ideas and
10 finalized them, we've shared that with the industry
11 through NEI industry workshops.
12 We're scheduling another workshop the
13 first week of February which will be our fourth one to
14 talk about lessons learned from the fall plants and
15 we're going to be talking about ERRV visits, audits,
16 how to prepare for the audits and we're even
17 contemplating right now in the planning, having some
18 breakout sessions.
19 CHAIRMAN SCHULTZ: I guess we're in
20 questions now.
21 Bill, I don't know if this came in through
22 your presentation but I wanted to ask someone on the
23 panel, what's the -- we talked about calculations that
24 are done to support the timing and so forth, GOTHIC
25 evaluations were mentioned in terms of environmental

1 conditions within spaces and so forth.

2 What's the -- are the pedigree of those

3 calculations the same as one would expect for licensing

4 calculations?

5 MR. WEBSTER: Well, they -- I can speak for

6 Dominion. The requirements of --

7 CHAIRMAN SCHULTZ: That's what I wanted

8 you to do.

9 MR. WEBSTER: Okay. 12-06 for the

10 calculations they are required to be engineered in

11 evaluations. It didn't specifically require them to

12 be Appendix B calculations and evaluations. But at the

13 level it would at least have, you know, an independent

14 review and that type of thing was an expectation of the

15 type of calculations.

16 At Dominion, by and large, you know, if we

17 don't do -- if it's an engineering typical evaluation

18 it's a little different. But if it's a calculation,

19 we've used similar -- it's non-safety related but we

20 used the calculation process that we would use for any

21 other calculation that we did.

22 Now, we do distinguish between non-safety

23 and safety but as far as the peer review, independent

24 review, some of the differences, and I think Mike

25 alluded to this, is, you know, we're not talking about

1 design bases. Then a lot of times we were in the best
2 estimate trying to get a clear picture of what that time
3 line really looks like.
4 Not -- you're not, you know, if you have
5 this time line and if it's overly conservative it might
6 be in conflict with our real priority in another area.
7 So, we tried to use best estimate inputs through those
8 calculations and the K heat calculations, we tried not
9 to use. You know, our design basis type of
10 information.
11 But the way we did the calculation at
12 Dominion was following a non-safety calculation route.
13 CHAIRMAN SCHULTZ: Right. I think the
14 staff -- I mean your staff would be encouraged to do
15 it both best estimate as well as conservative
16 evaluation. We heard conservative evaluations were
17 done in his, that was appropriate for the application
18 but also you kind of like to know what the real answer
19 is.
20 MR. POWELL: We're very similar. In some
21 cases we have done safety related calculations
22 particularly when we used our NSSS vendor from a
23 documentation standpoint. When we've asked to
24 finalize their results like you heard Mr. Eimar talk
25 about use of the CENTS code, C-E-N-T-S.

1 CHAIRMAN SCHULTZ: Yes.

2 MR. POWELL: That's a thermal hydraulic
3 code that's used for combustion engineering system 80
4 plants or combustion engineering plants. So, we've
5 had Westinghouse document those as safety related or
6 QA calcs.

7 But we've done engineering studies.
8 We've done nonlinear analysis to look at the
9 non-seismic pieces of equipment to show whether or not
10 they'd be available. We've done high competence and
11 low probability of failure analysis on some of our
12 non-safety tanks to see if they'd be available
13 post-seismic event. So, there's a spectrum of how we
14 document it.

15 I will say that our biggest challenge is
16 that our staff is preconditioned for traditional design
17 basis waves and you have to think differently when we
18 start talking about the ground rules for a beyond design
19 basis event, the ground rules in NEI-12-06 and people
20 struggle with that. It takes some time to work through
21 that process.

22 Some of our vendors have had the same
23 struggle because they've been supplying products for
24 years traditionally at design basis approach. So,
25 when you start talking to them about using best estimate

methods, they're outside their comfort zone.

CHAIRMAN SCHULTZ: That's a very interesting comment.

MEMBER RAY: A nonlinear analysis can comply with Appendix B but we'll leave it.

MR. POWELL: Oh, it can.

MEMBER RAY: I'm just kidding you.

MR. POWELL: Well, I think it's more about the inputs than, you know, the way you have to assume the inputs going into it.

MR. AMWAY: And I agree, I mean the example slide that I had, I mean we did our spent fuel pool counts based on the maximum design of a 140 degrees, but know 90 to 100 is our normal.

But, in that particular example, we're not overly challenged by the makeup strategy. Whereas, in my containment heat up analysis for RCIC preservation, six hours, I start to get concerned of whether I'm going to be able to take action in time and that's where it might be appropriate to say, yes, my tech spec limit for suppression pool temperature is 90 degrees, but I never operate there. I'm always, you know, 75 to 80 degrees. So, how much margin is there between 75 to 80 degrees versus starting at 90 degrees?

MR. POWELL: Yes, some of the challenges

1 we've had is particularly when you take and you want
2 to modify and create and RCS injection point and now
3 you are having to design hangers for that section of
4 pipe where you have to add some amount of margin to
5 account for seismic when you're not through with your
6 seismic.
7 So, we had to create boundaries
8 essentially beyond design basis boundary flags on our
9 drawings that says from this point to the left is
10 traditional design basis and this point to the right
11 is beyond design basis just to say the rules are
12 different.
13 CHAIRMAN SCHULTZ: The other question I
14 have on -- maybe comment or asking you to comment upon
15 it, the staff indicated that, well, it's very difficult
16 to run through this is a formal way because we don't
17 have the reevaluated flood hazards and we haven't
18 finished some of the external event evaluations.
19 But then they also said that when they came
20 to the sites and were involved in the discussions of
21 how the challenges of implementing the equipment
22 insulation process and so forth, there was a lot of
23 discussion or had been a lot of discussion as to well,
24 what are we really going to be faced with in terms of
25 what could have caused the loss of off site power?

1 MR. POWELL: ELAP.

2 CHAIRMAN SCHULTZ: The ELAP.

3 MEMBER RAY: Not loss of off site, but loss

4 of AC.

5 CHAIRMAN SCHULTZ: Yes, the ELAP. And so

6 my question was just to get the industry perspective

7 on that discussion. That is, I would have expected

8 that within the site environment, there must have been

9 a lot of discussion about different opinions, different

10 views, different expectations as to what that challenge

11 might be.

12 Are we going to move the equipment? What

13 are we going to be faced with? What are we going to

14 have to move to get the equipment from point A to point

15 B? Will it be snow? Will it be missiles? Debris?

16 And so forth.

17 So I guess my impression is there ought to

18 have been a lot of work done independent of what we're

19 doing formally in terms of reevaluation of hazards. A

20 lot of work done at least in terms of developing the

21 challenges that are going to be faced in any event.

22 MR. POWELL: There was. If we take

23 deployment, for example, you know, you walk around the

24 site and say what kind of event would I have? If I had

25 a tornado, what's my possible debris field and how would

1 I prevent it from getting to the units to deploy the
2 equipment?
3 If I had a seismic event, do I have
4 non-seismic tanks that may create an issue with
5 flooding out an area so I can't deploy through that
6 area?
7 So, so much of this is visualization.
8 We're walking around and coming up with not only a
9 primary deployment path, but maybe a secondary or
10 tertiary. And you can't do that sitting at a desk and
11 you can't really explain to somebody to give them an
12 appreciation until you go on a walk down and walk them
13 through that whole process and say, you know, we're
14 taught in design basis space that the turbine building
15 doesn't exist after a seismic event. But what if it's
16 still there? Or how would it fail? Would it fail to
17 the north or the south, you know?
18 You know, if we have to transverse under
19 power lines that may be down, how would we deal with
20 that situation?
21 And you know, the staff was so much
22 interested in that as well because it's one thing to
23 say, yes, I can deploy the equipment, but can you
24 really? And the staff in the audits would actually go
25 to the -- where your proposed FLEX building was or is

1 and they'd walk the deployment routes down to gain a
2 degree of confidence. Are you going to be able to
3 accomplish what you said?
4 You know, if you routing hose up six
5 flights of stairs, are you using devices to keep the
6 bend radiuses right? Do you have the right
7 amount -- length of hose? What, you know, is it really
8 feasible and then do you have another 1,000 foot run
9 of hose to get to make your connection? Is it really
10 feasible?
11 Because FLEX is -- there's a lot of
12 different ways to accomplish the mission in the end.
13 MR. WEBSTER: And we, too, would -- looked
14 at and would agree that, you know, if you go to a haul
15 route evaluation and, again, I think Bill talked about
16 it this morning, you'd run in to a power line situation,
17 we would certainly say, okay, if that line was down,
18 you know, let me find another way around it so I don't
19 have to deal with it. And if I did have to deal with
20 it, what would it look like?
21 So, I think we did, you know, because of
22 making sure we had alternate paths, you know, if it
23 bridges or whatever, you know, if that were to happen,
24 what actually would I do? And actually think through
25 that process and, you know, what I would do.

1 Now, sometimes it was a little bit, you
2 know, if I got a front end loader and I said, you know,
3 I'll, you know, I'll make my path in essence. And we
4 would look at our time line and say, well, do I really
5 have time to do that? Is there enough margin here if
6 something were to happen that I could really do it? And
7 in large cases, you know, most of the time, the time
8 lines were very, you know, they were hours with margins,
9 so you get a comfortable feeling that that could be
10 accomplished even with some of the uncertainties that
11 you might face.
12 MR. AMWAY: And we took a very similar
13 strategy and approach. We did our flooding hazard
14 reevaluation in March 2012 and so when we built our FLEX
15 building, our robust building, we put that at a grade
16 elevation that's not below the flood level of the
17 reevaluated hazard.
18 And similarly, it was pointed out, okay,
19 what about the transport path from that building to the
20 site location? And we're doing the same thing where
21 that's trailer mounted and they're, you know, they're
22 relatively high vehicles and trailers. It's a ponding
23 issue, we're not talking about four feet of water, we're
24 talking about somewhere between a flood of 18 inches,
25 you know, wet event and we'll be able to get to that.

1 Now, having said that, you know, one of
2 things that was pointed out on our audit is our strategy
3 for taking fuel out of the storage tanks as a sounding
4 tube.
5 Well, you look at it and you're thinking,
6 okay, the sounding tube is, you know, this high off the
7 ground but it's in a recessed because of the, you know,
8 it's also a fuel offload so you recess it down in there
9 so if you spill fuel, it doesn't run into the
10 environment.
11 So, if you account for the drop plus the
12 height of the sounding tube, is it still below the lip
13 level? And you find it it's not. So, I mean we're
14 going to look at one of two ways is you look at your
15 flooding hazard reevaluation and it has a rise and a
16 peak and then an ebb and do you really need a fuel
17 connection at that point? Or can you use what you have
18 in your 500 gallon tanks in the vehicles or do I have
19 to add 18 inches or a foot on to the sounding tube to
20 make it work?
21 So that's one of the things, you know, it's
22 a practical application of things you might run into
23 that you look at an you evaluate ahead of time.
24 CHAIRMAN SCHULTZ: Other questions by
25 members of the committee?

1 MEMBER SKILLMAN: I would just observe on
2 when I think of maybe a two year fuel cycle, how
3 many -- you have an E&A, you have a mid-cycle review,
4 you've got your NSRB meetings, you have your Board
5 meetings or your on site meetings. You have your
6 biannual exercise, you're probably drilling four times
7 a year. You're doing call-outs.
8 When do you say -- when's enough, the
9 things that you're talking about are complex, they take
10 your very best people, your very precious limited
11 resources, get them focused. What isn't getting done?
12 This is a tremendous amount of work.
13 Normally, this is a zero sum game in this
14 environment, this economic environment for these
15 plants. Something's got to give. What's not getting
16 done? Excuse me, go ahead.
17 MR. BAUER: I don't want these guys to
18 start up.
19 MR. WEBSTER: I think we've just got to be
20 cautious --
21 MEMBER SKILLMAN: I'm raising the flag
22 because I can understand this.
23 MR. WEBSTER: -- to look at that to make
24 sure that we don't affect, you know, the --
25 MEMBER SKILLMAN: What's important?

1 MR. WEBSTER: Right. And we do focus on
2 what's important. So, for, you know, operator
3 training, for example. We just want to make sure that
4 we don't envelop so much training into the operator
5 staff that, you know, things they really need to get
6 trained on or even the things that may be more frequent
7 or more important or a design basis type things don't
8 get watered down with type of training.
9 So, it's really a balancing act and the
10 stations are challenged, I'd say, to find that balance
11 and implement it because one of the things that we found
12 was that -- I mean there's, you know, there's even the
13 maintenance and testing of this equipment, it's a lot
14 of equipment.
15 If you look at the buildings, the size of
16 the buildings and equipment and things inside, there's
17 not a small amount of equipment here. There's a lot
18 of equipment. So the maintenance and testing that has
19 to be done and all that, it has to be -- we do have to
20 be cautious that we're not -- because there's a limited
21 amount of resources, as you said.
22 MR. POWELL: I will tell you for Palo
23 Verde, we had to make choices on reliability
24 improvement mods. In some cases, there were some
25 systems that were yellow windows that ideally we had

1 mods and deferred them a cycle.

2 We were challenged with -- we submitted

3 overall integrated plan. This isn't a complaint. We

4 submitted our overall integrated plan in February of

5 2013 and our Unit 1 outage was a month later and that

6 outage counted. So, that meant everything became a

7 fast track. And, you know, when you have fast track

8 mods, you're susceptible there and so we had to put a

9 lot of energy into making sure we didn't have a lot of

10 errors in implementation.

11 It also meant we had to go into an outage

12 and do both electrical trains and both mechanical

13 trains whereas, in one of the other units we had the

14 luxury of doing one train each outage.

15 But we had deferred some plant

16 improvements and some reliability improvements until

17 later on in 2017, 2018, 2019 because there isn't an

18 endless supply of money and, in fact, we had to go to

19 our owners and our owners had been very gracious and

20 we've gotten some additional funding to support the

21 budget.

22 So, I will tell you, at least to my plant,

23 that's been our challenge, trying to balance that.

24 MR. BAUER: But it's not just a money

25 issue. You can only push so much stuff out into outages

1 and into the plant. There's only so much they can take
2 on at one time and still do it successful.
3 MEMBER SKILLMAN: You can change the risk
4 profile pretty significantly when you start doing
5 electrical and mechanical and different trains. You
6 can create a problem that you really don't want to
7 create.
8 MR. BAUER: Yes. An important question
9 that is a continuous agenda item for the -- in sIEC
10 meetings when they meet with the NRC, the cumulative
11 effects of what we're doing to ourselves.
12 MEMBER SKILLMAN: Mr. Chairman, thank
13 you.
14 MR. AMWAY: If I can just go back and talk
15 to the training a little bit, too. Because, you know,
16 we talked about eight year frequencies for doing drills
17 and exercises. But the advantage of the SAT process,
18 it could look at portions of our strategies and let's
19 take the load shed, for instance.
20 It's a time sensitive action, it supports
21 not only ELAP but, you know, station black out. It
22 supports some other things. So that particular aspect
23 would be in the operator training evaluation or in the
24 operator training program, most likely as a job
25 performance measure where they'll actually have to go

1 out and do that on a periodic frequency to validate that
2 they could actually do it and do it in the time that
3 we need it done.
4 So, even though we're not doing an
5 integrated drill or exercise for FLEX, there's bits and
6 pieces that get trained along the way in between that
7 eight year frequency to make sure that operators can
8 do specific tasks.
9 MR. WEBSTER: On a win-win.
10 MR. AMWAY: Yes, and it is an important
11 balance. I mean we have, you know, we're talking about
12 design basis events and beyond design basis events. We
13 need our operators to perform day to day, you know,
14 respond to a feedwater pump threat, but they need to
15 do it 40 and, you know, we need -- those things are going
16 to get trained on a lot more frequently.
17 MR. POWELL: I would propose that we need
18 to start thinking in terms of proficiency versus
19 training, maintaining some level of proficiency versus
20 formal classroom training, more simulator time on these
21 type of events because the operators only have so much
22 time to spend in the classroom. They have to maintain
23 so many hours on shift to maintain their proficiency
24 in the control room.
25 And what we don't want to do, and this is

1 where the balance becomes very tough, is take away the
2 good training they get and the mandatory training and
3 give them some other training maybe that isn't as high
4 of value.
5 MR. AMWAY: I think we've offset that to
6 some degree by having strategies and equipment
7 connection points that are relatively simple and it's
8 a balance between, okay, how much can I put in a
9 procedure and expect an operator to go out and do and
10 what's it look like when he gets out there? Is it
11 simple things to do or is he unbolting things, lifting
12 leads, things like that?
13 Well, in the majority of cases for the FLEX
14 equipment, you've heard the term plug-n-play, it's, you
15 know, it's standard connections, things that, you know,
16 okay, maybe it's not for a design basis event he's doing
17 but maybe it's the same type of threat it can actually
18 be used in the fire work, you know, just typical fire
19 hose type connections.
20 So, it's that type of thing, it's a
21 balance. It's not going to be all training, it's not
22 going to be all procedures and it's not all going to
23 be in the design. It's a combination of those things.
24 CHAIRMAN SCHULTZ: Other comments?
25 Questions? All right.

1 MEMBER STETKAR: I promised I'd, you know,
2 come off the wall. I promised you guys I'd ask the same
3 thing.
4 Any of you PWR guys have only motor
5 operated isolation valves in your let down line inside
6 the containment and have you looked at those?
7 MR. POWELL: Error operated and check
8 valves.
9 MEMBER STETKAR: Okay.
10 MR. WEBSTER: And we have error operated
11 as well.
12 MEMBER STETKAR: You're not this one then?
13 MR. POWELL: I'm afraid to ask who that
14 was?
15 MEMBER STETKAR: No, no, I've got a
16 diagram.
17 CHAIRMAN SCHULTZ: All right, at this
18 point, I would like to ask and provide an opportunity
19 for public comments and first, as the phone line is
20 open, I'll ask if there's any members of the public or
21 personnel in the room who would like to make a comment
22 for the record.
23 Okay, state your name for the record and --
24 MR. FLAIG: Kurt Flaig from Dominion.
25 I'm also the Chairman of the Analysis Subcommittee of

1 the PWR OG.

2 And I guess what I wanted to say was, it's

3 been a real challenge going through the process, doing

4 the analysis work, trying to meet the needs of the NRC

5 staff and their review of the information that we've

6 provided to our members.

7 I do think that one of the concerns that

8 I'd like to hear is -- and I think the NRC staff feels

9 it too, is that we started out with not knowing where

10 the sweet spot was with regards to coming to a

11 conclusion on what was good enough. And I think we

12 still struggle with that to some extent.

13 You mentioned the RCP seal issue that is

14 still ongoing and that's part of the struggle with

15 trying to find the sweet spot with how much is enough.

16 And that's just like the -- it is a

17 struggle, we'll get through this process, but that has

18 been an extreme challenge for us.

19 CHAIRMAN SCHULTZ: Thank you. Other

20 comments from the room?

21 At this point, I'd like to ask for comments

22 from the phone lines. So, if people are out there

23 listening in, could someone please make some noise so

24 we can know the phone line is open?

25 MR. JACKSON: Yes, Tom Jackson from Rizzo

1 Associates. It's been very interesting. I don't have
2 any specific comments.
3 CHAIRMAN SCHULTZ: All right. I'll ask
4 if anyone would like to make a comment for the benefit
5 of the committee to state your name and make your
6 comment.
7 Hearing none at this time, then we'll close
8 the bridge line and close the public comment period.
9 At this point, I'd like to -- we do have
10 this meeting continuing tomorrow morning. I certainly
11 want to take the opportunity to thank the panel from
12 industry who has made their presentations today.
13 We've learned a lot and discussed a lot of information
14 about the process.
15 And also thank the staff for their
16 presentations as well.
17 I'd like to go around the room just to
18 provide the members of the committee an opportunity to
19 make comments if they would like to at this time,
20 knowing that we also have tomorrow to have that
21 opportunity as well.
22 MEMBER RICCARDELLA: I have no additional
23 comments at this time.
24 CHAIRMAN SCHULTZ: Ron?
25 MEMBER BALLINGER: I have no additional

comments.

CHAIRMAN SCHULTZ: Dick?

MEMBER SKILLMAN: No additional.

CHAIRMAN SCHULTZ: Thank you. Harold?

MEMBER RAY: No.

CHAIRMAN SCHULTZ: Dennis?

MEMBER BLEY: Yes, I may as well do it now instead of tomorrow.

I really appreciate today's presentations and see a lot of benefit in what we've heard about.

One part of it nags at me a little so I'll just put that on the table. Thirty years ago a mid-80s client, we're just doing a PRA for asked should I fix anything? You know, I said well, things look pretty good. He said, well, if I were going to put more money in, what should we do? What's the next big thing?

And what he decided was if you run after one specific thing, you can make it really reliable and really solid.

But what's going to get is something somehow that we didn't of and something like this system, something you can put water and you can put electricity anywhere would be really nice. And he actually went ahead and designed something like that.

The one thing it did that was quite

1 different than the current version is they found some
2 quick coupling devices, so instead of having these nice
3 connections that are going to be real easy and you'll
4 do much better if you need water where you thought,
5 it'll be real easy to hook up.
6 They found stuff you can cut out a few feet
7 of pipe and you could hook up these couplings on to the
8 butt end of the pipe and they could hold fairly high
9 pressure. So, that gave you flexibility, essentially,
10 to put water anywhere through the six inch pipe,
11 something like that.
12 And John raised this earlier, if what the
13 real world gives us is something we just haven't thought
14 of and it wants water somewhere we haven't put those
15 connections or it wants water at high pressure at a
16 little higher flow rate than we've got, you kind of put
17 off some of the flexibility in FLEX.
18 On the other hand, you've made it much more
19 reliable for where we're most likely going to need it
20 and a little loss of flexibility is something I wonder
21 about that trade off. But we've got something that's
22 taken us along way now for most things that are outside
23 of the realm of what we thought and so you've got water
24 to the key places and you've got power to the key places
25 and that'll do us well in the long run, I think.

1 CHAIRMAN SCHULTZ: John?

2 MEMBER STETKAR: No, I don't have anything

3 more after Dennis.

4 CHAIRMAN SCHULTZ: Thank you. Joy?

5 MEMBER REMPE: No comments.

6 CHAIRMAN SCHULTZ: Mike?

7 MEMBER CORRADINI: Nothing. I just

8 wanted to thank particularly the utility panel. I

9 learned a lot in terms of how they implement. I think

10 to me that's important. I'm not as familiar with that

11 and that was quite helpful.

12 CHAIRMAN SCHULTZ: All right. I'm going

13 to recess the meeting then until tomorrow morning and

14 certainly invite everyone back to be with us tomorrow.

15 (Whereupon, the above-entitled matter

16 went off the record at 5:29 p.m.)

17

18

19

20

21

22

23

24

25

1
2
3
4
5
6
7
8
9
10
11

Palo Verde FLEX Strategies

Gene Eimar, Shift Manager
Palo Verde Fukushima Initiative
November 20, 2014

Presentation Topics:

- FLEX Support Guideline Implementation
- Extended Loss of All Site AC Guideline
- Extended Loss of All Site AC Guideline Appendices

Palo Verde FLEX Support Guideline Implementation

The Event

- Undefined external event occurs
- Loss of Off-Site power
- Reactor trip
  - o All Control Element Assemblies insert
- Failure of all on-site AC sources to function
  - o Diesel Generators
  - o Station Blackout Generators
- No other equipment failures
- No other event in progress
- No security event

Standard Post Trip Action Diagnostic Flowchart

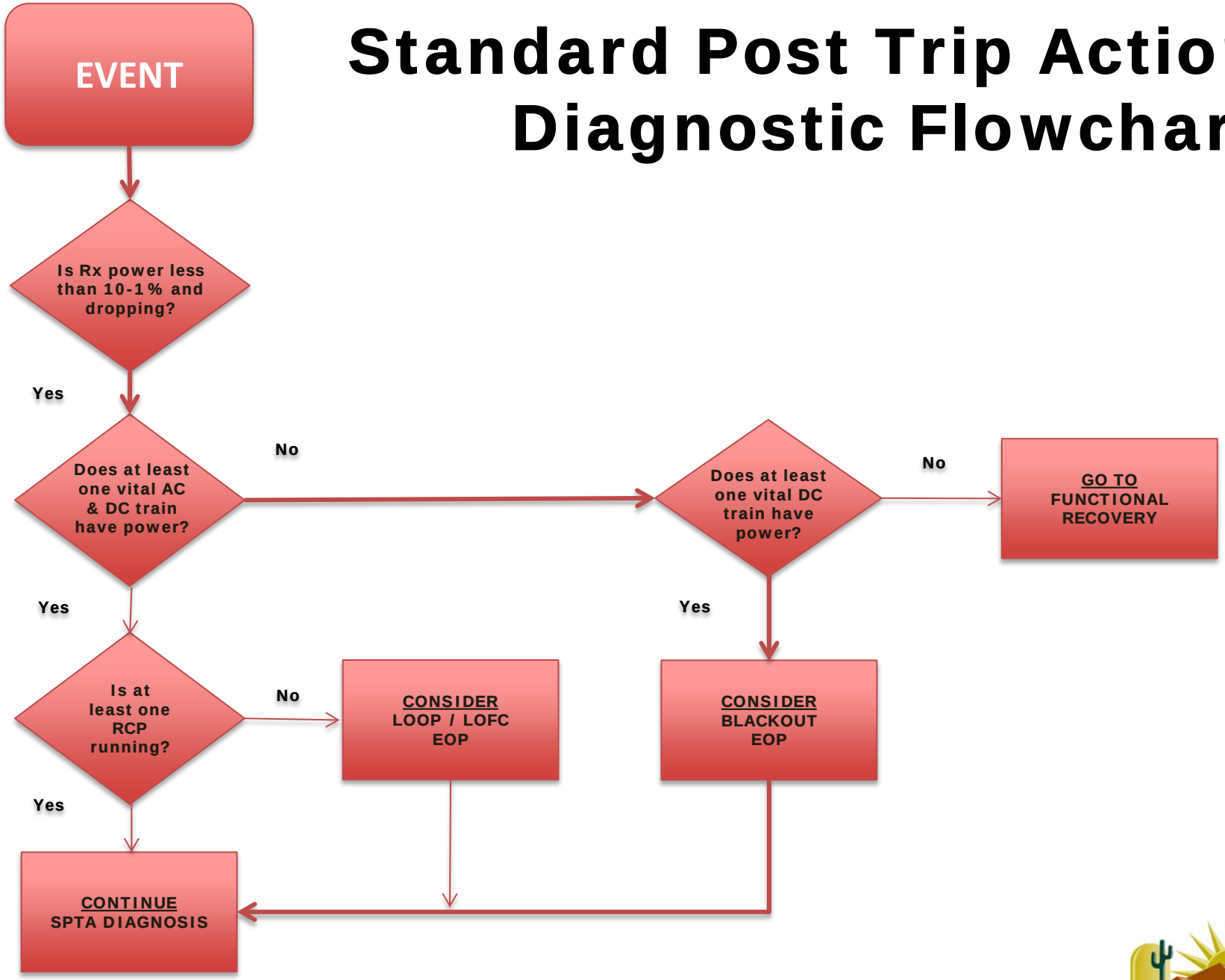

Standard Post Trip Action Diagnostic Flowchart

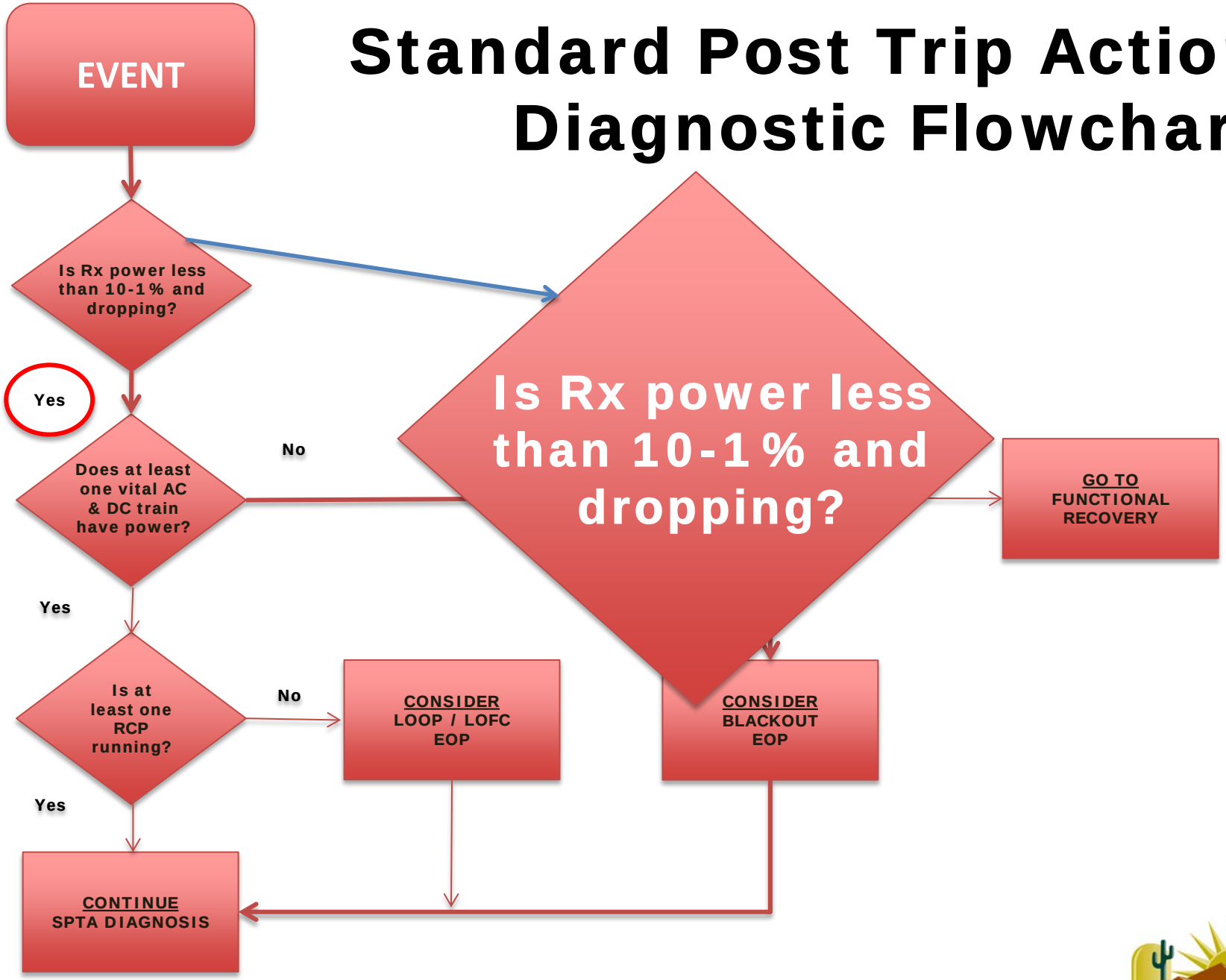

Standard Post Trip Action Diagnostic Flowchart

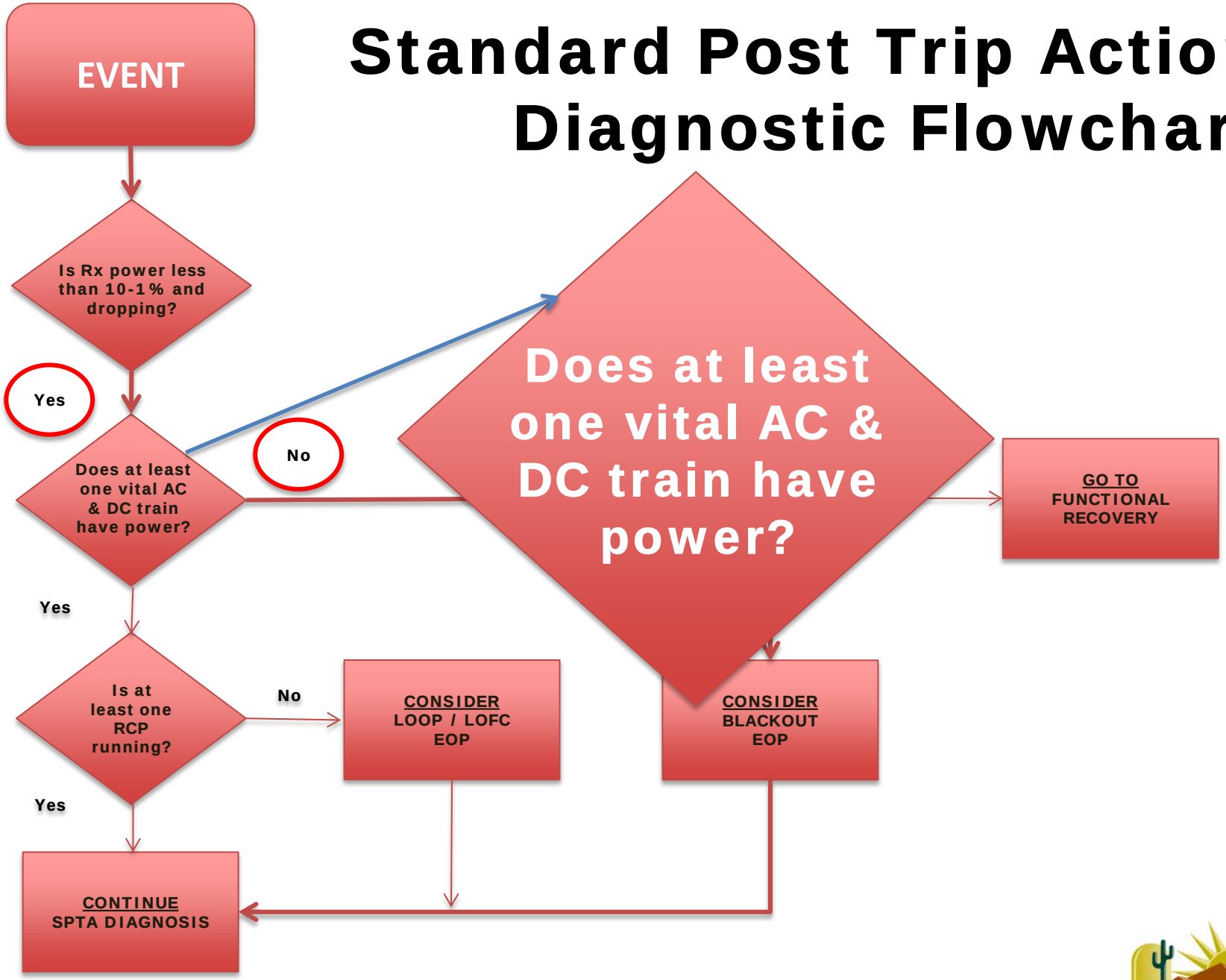

Standard Post Trip Action Diagnostic Flowchart

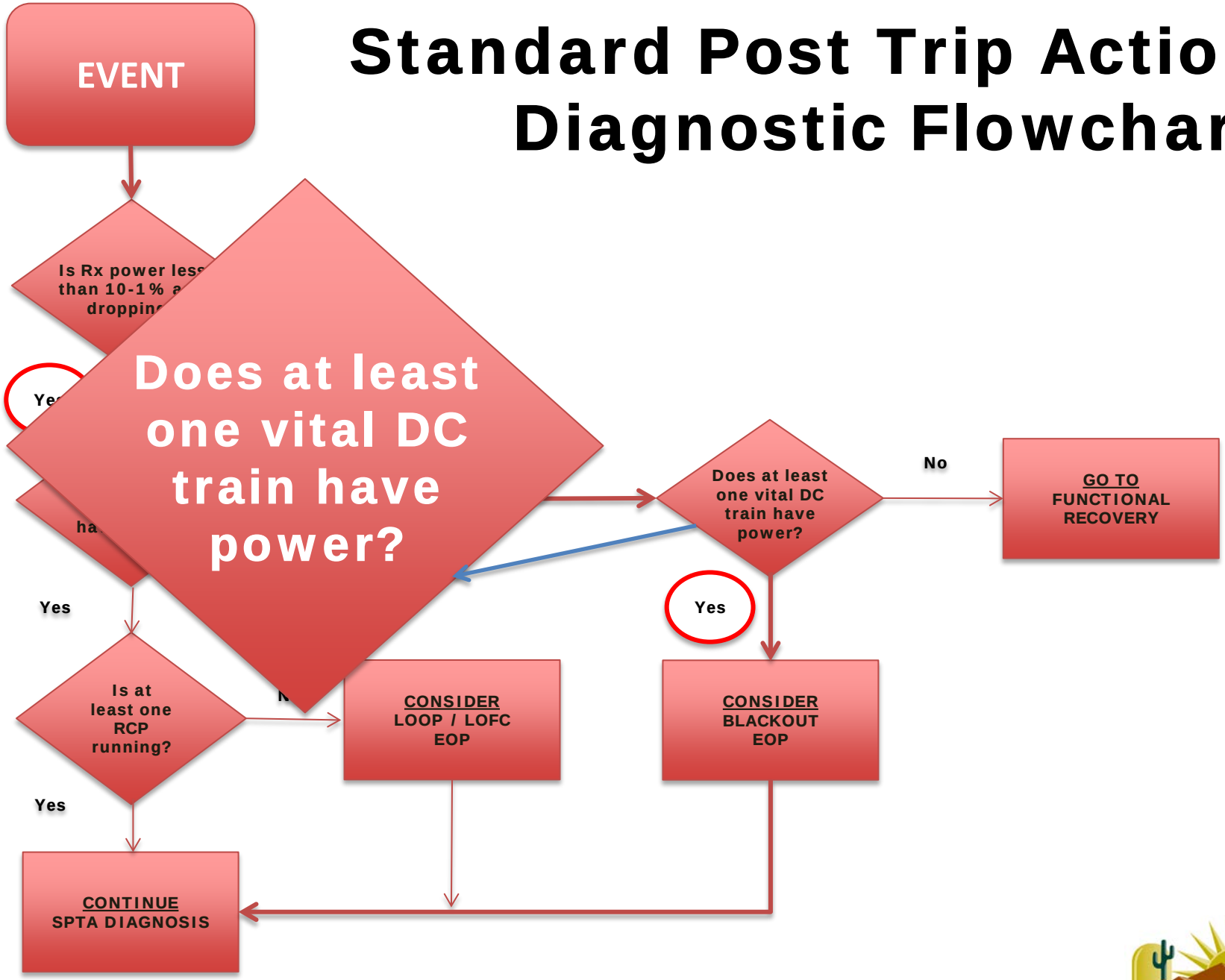

Standard Post Trip Action Diagnostic Flowchart

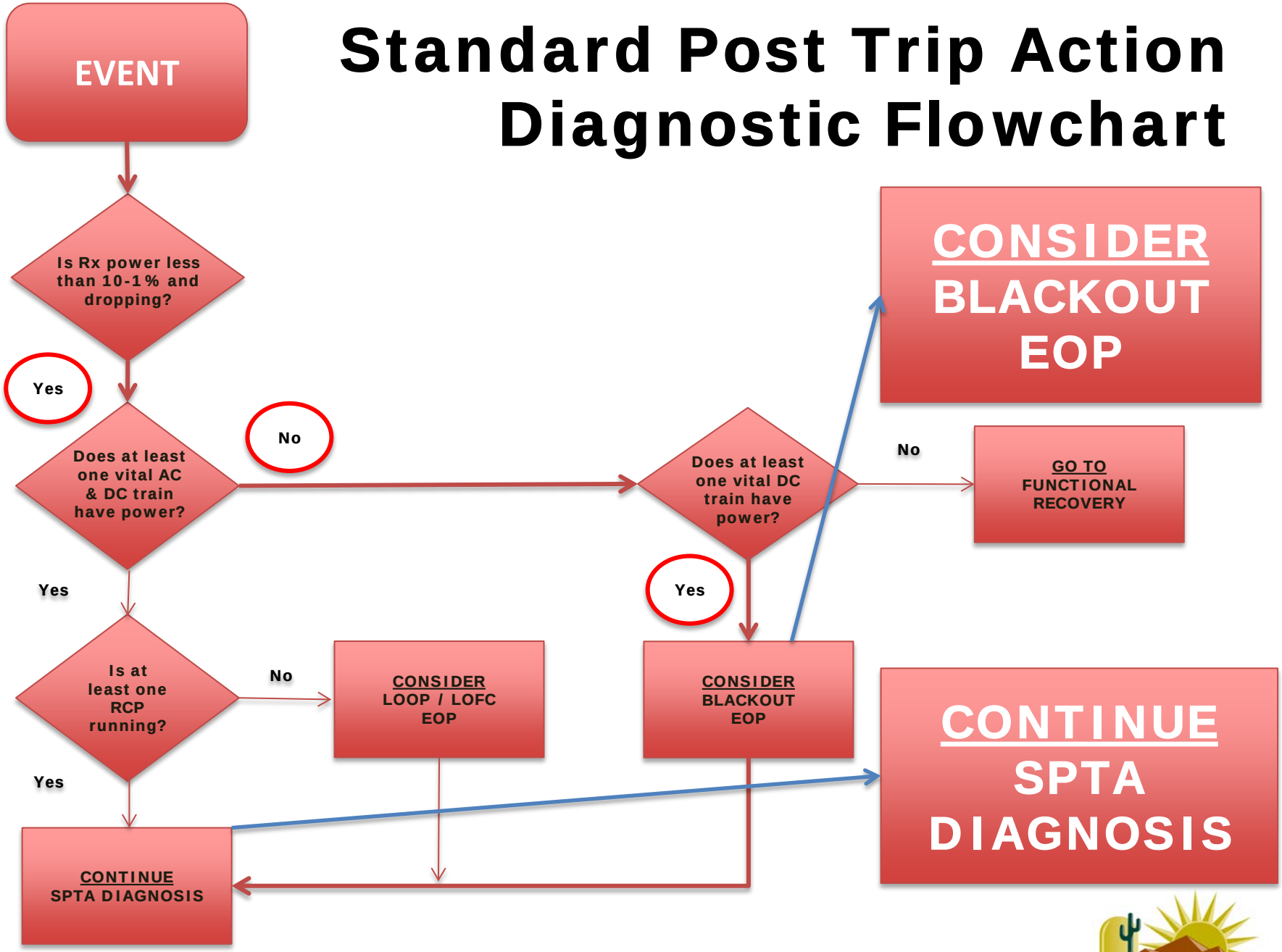

FLEX Flowpath From Blackout EOP

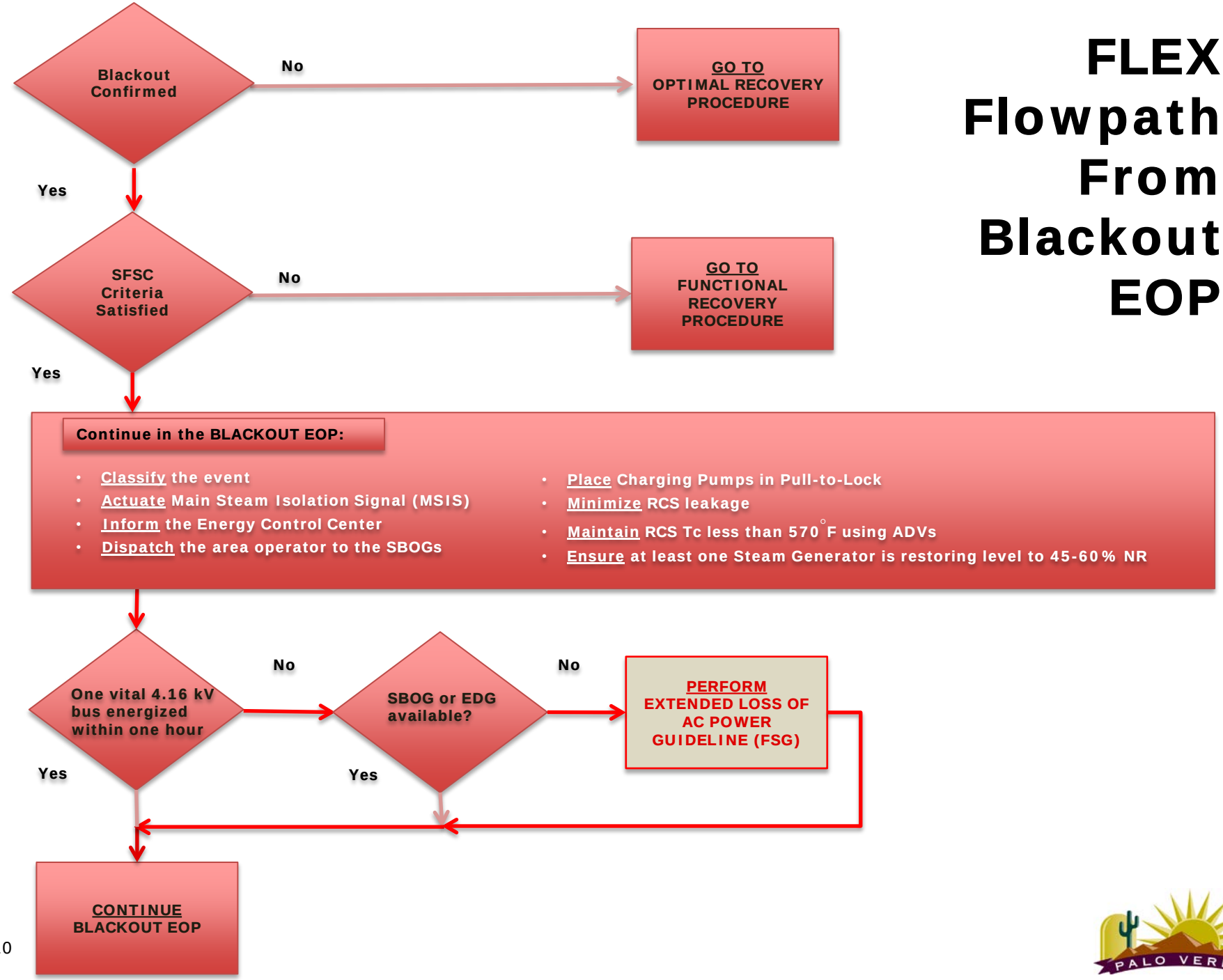

FLEX Flowpath From Blackout EOP

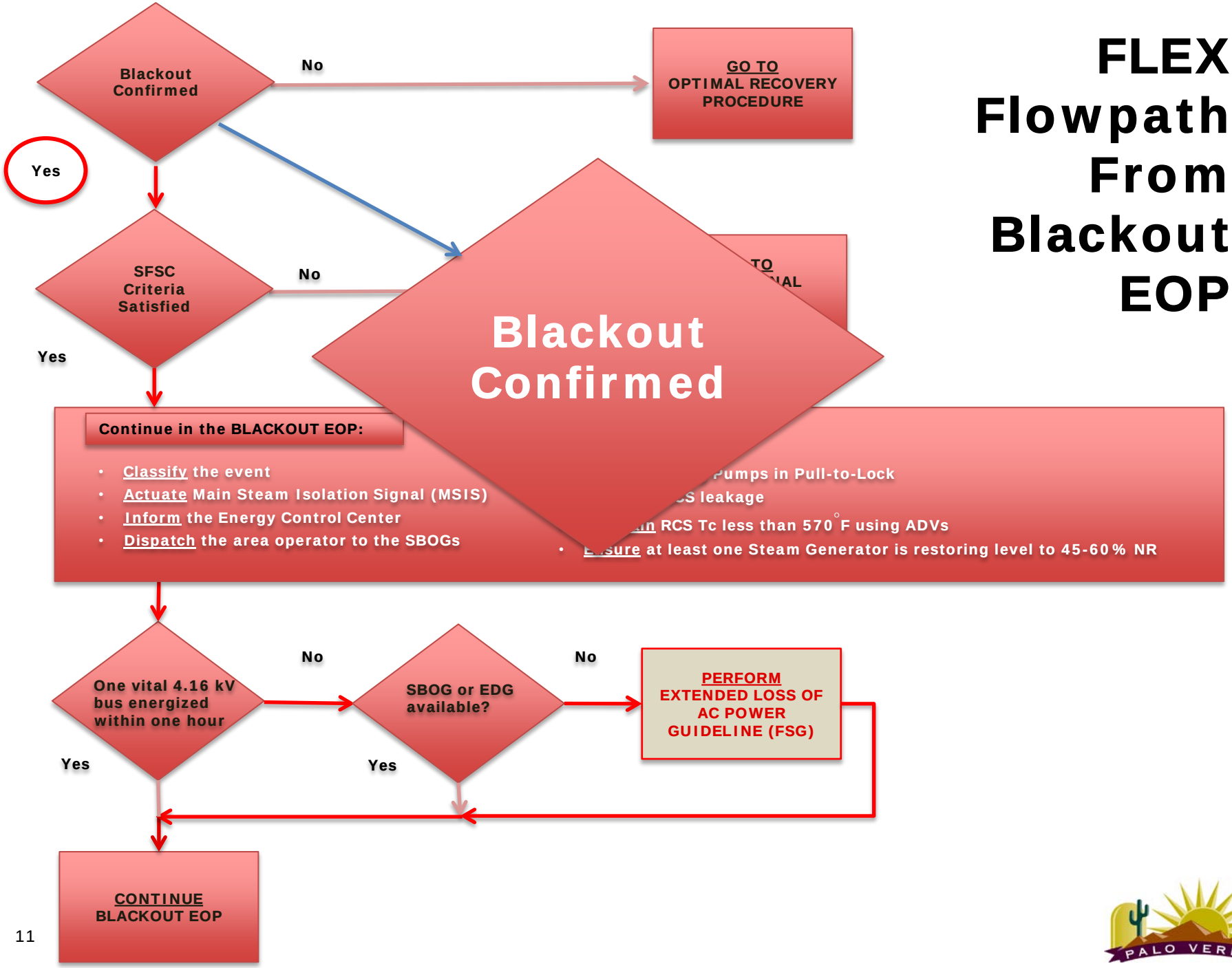

FLEX Flowpath From Blackout EOP

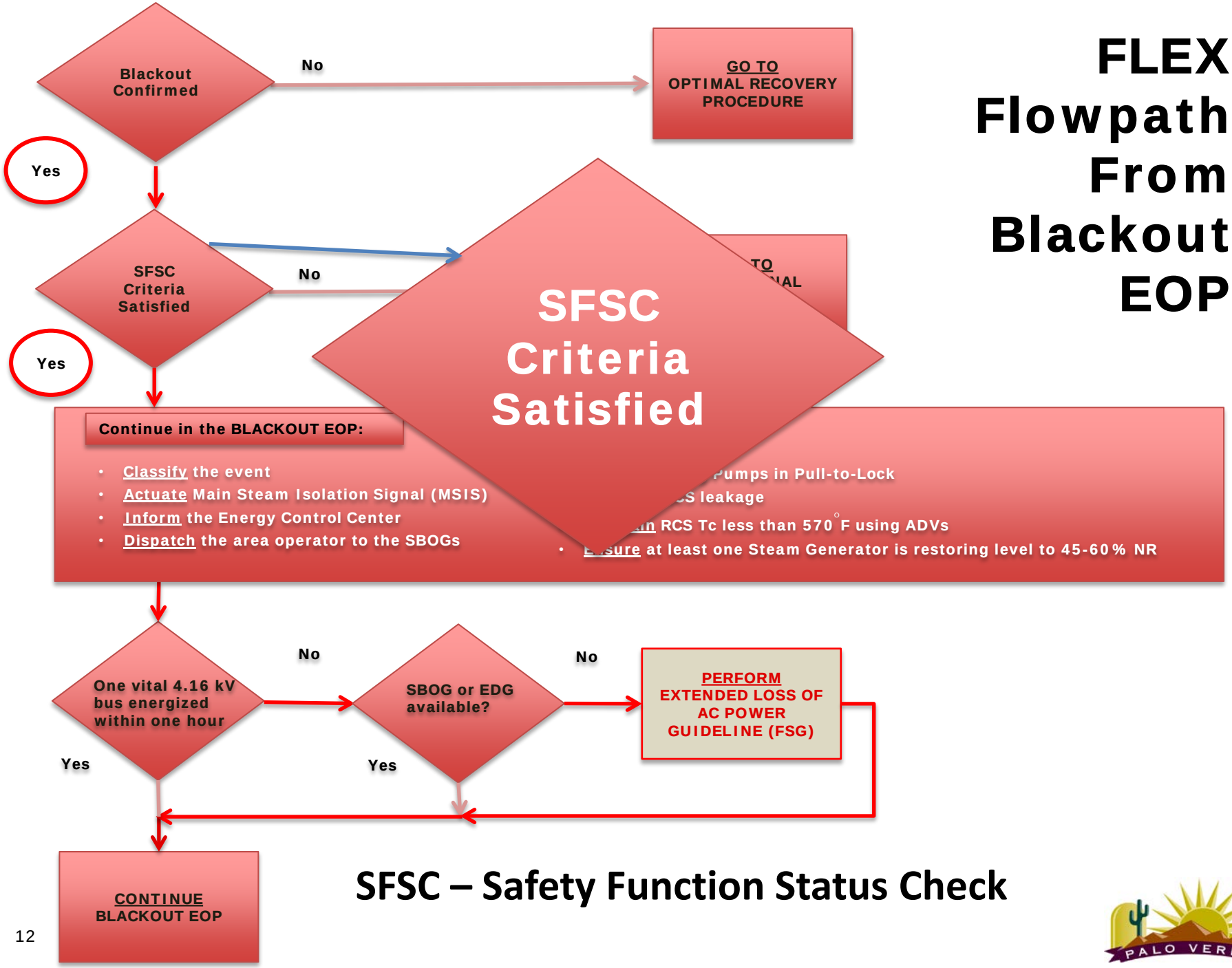

SFSC – Safety Function Status Check

FLEX Flowpath From Blackout EOP

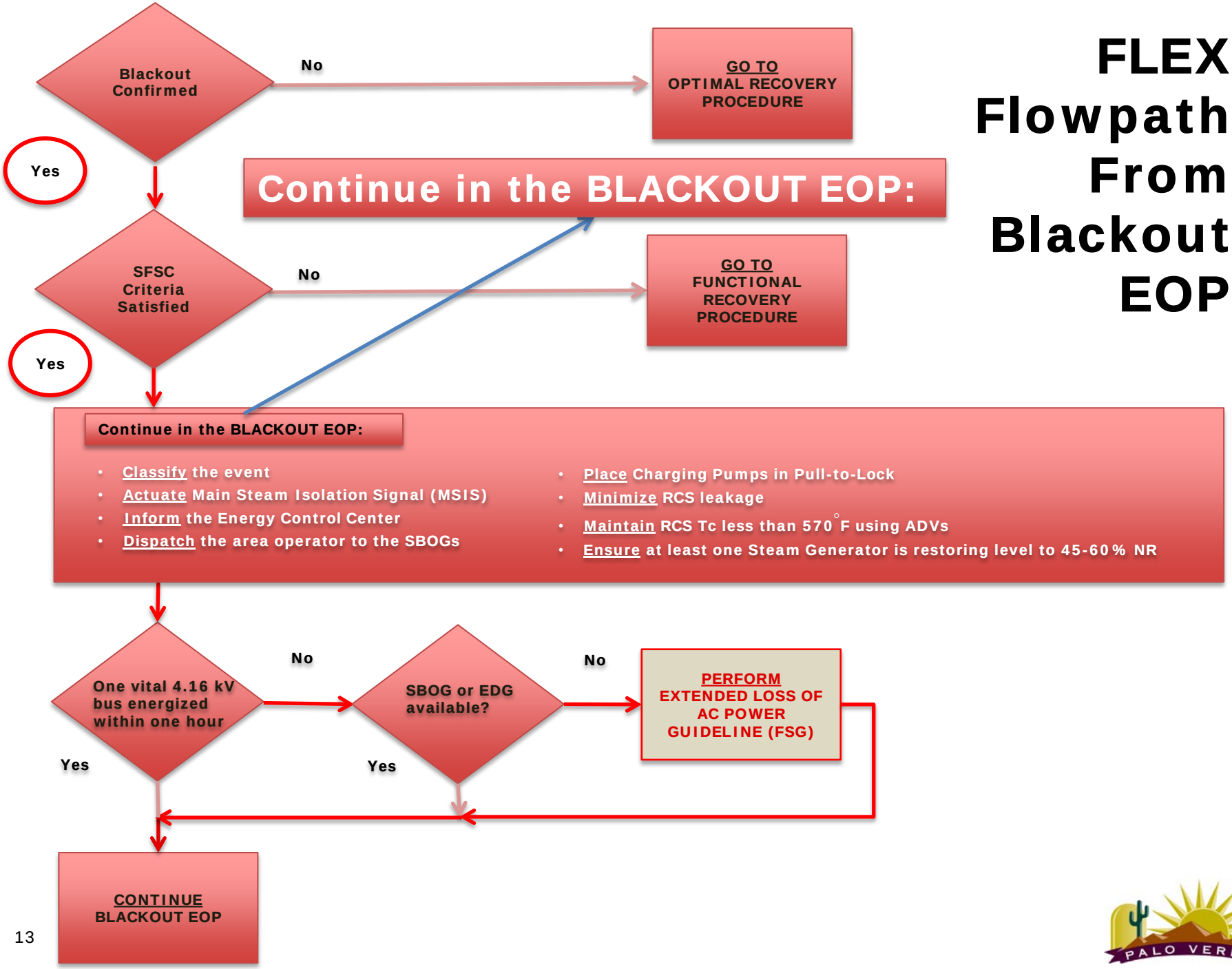

Emergency Plan Impact

- Event initiation:
  - o Loss of offsite and onsite AC power for > 15 minutes

Site Area Emergency (SAE)

- Upon determination of prolonged or extended loss of AC power (ELAP):
  - o Loss of offsite and onsite AC power for > 15 minutes

  And
  - o Restoration of at least one emergency bus in less than 4 hours is not likely

General Emergency (GE)

FLEX Flowpath From Blackout EOP

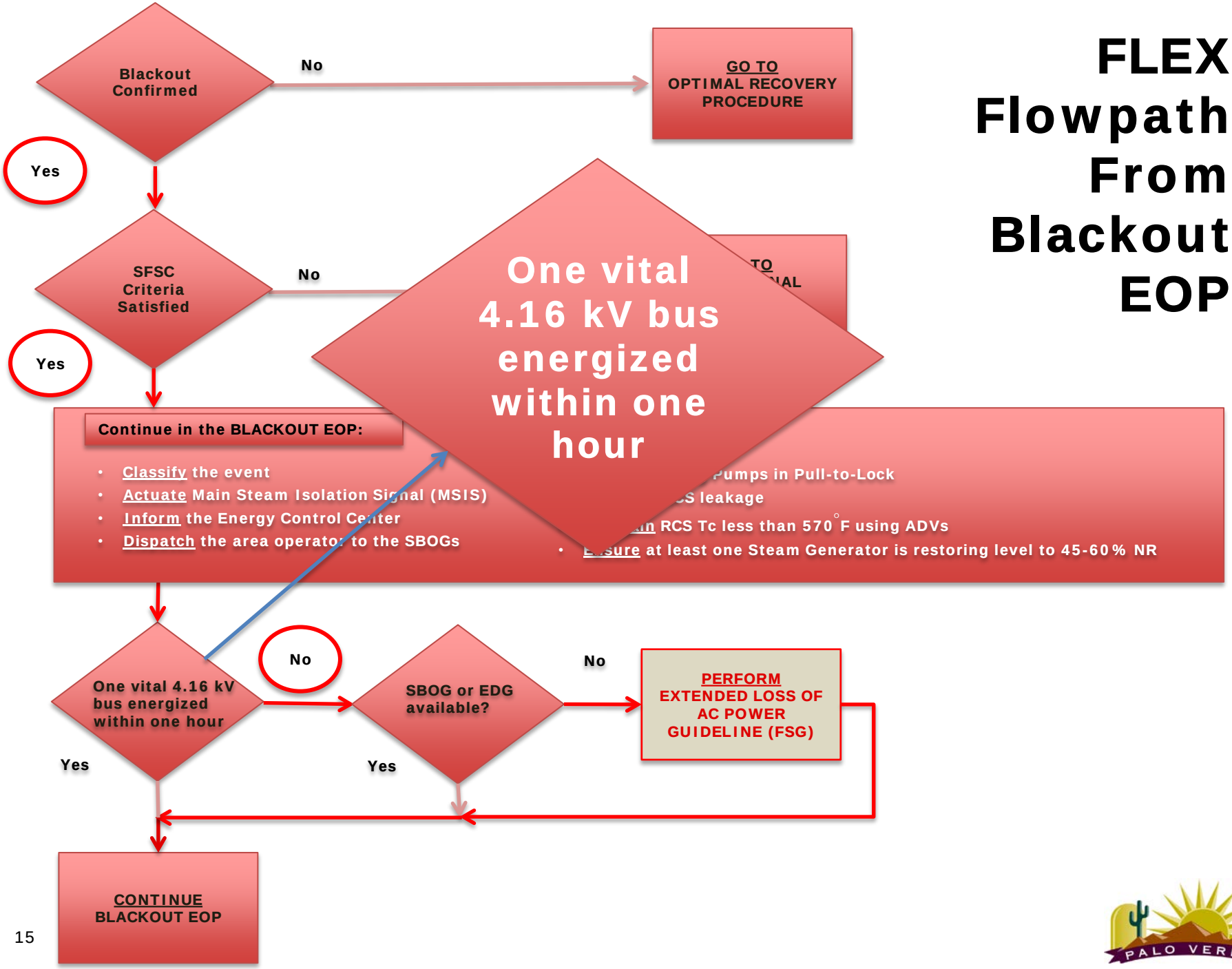

FLEX Flowpath From Blackout EOP

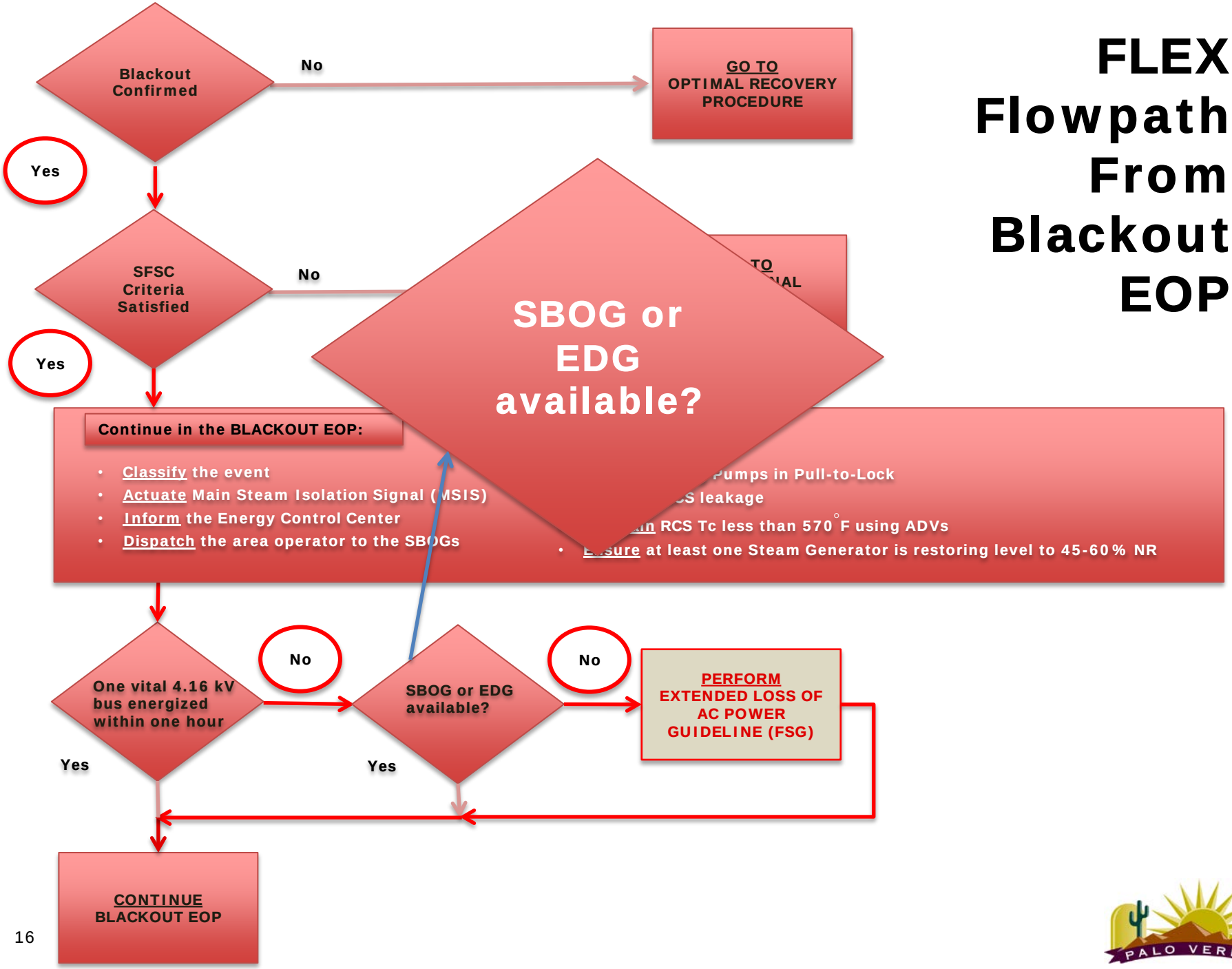

Blackout EOP Interface with the FLEX Support Guideline (FSG)

- **IF** at least one vital 4.16 kV AC bus is **NOT** expected to be energized within one hour, **THEN** align SBOG to the "A" Train bus

- Use contingency step if SBOGs are not available

- Contingency step would direct the Control Room to **perform** the FSG and go the SBO procedure

COMMAND AND CONTROL REMAINS WITH THE EOP IN USE

FLEX Flowpath From Blackout EOP

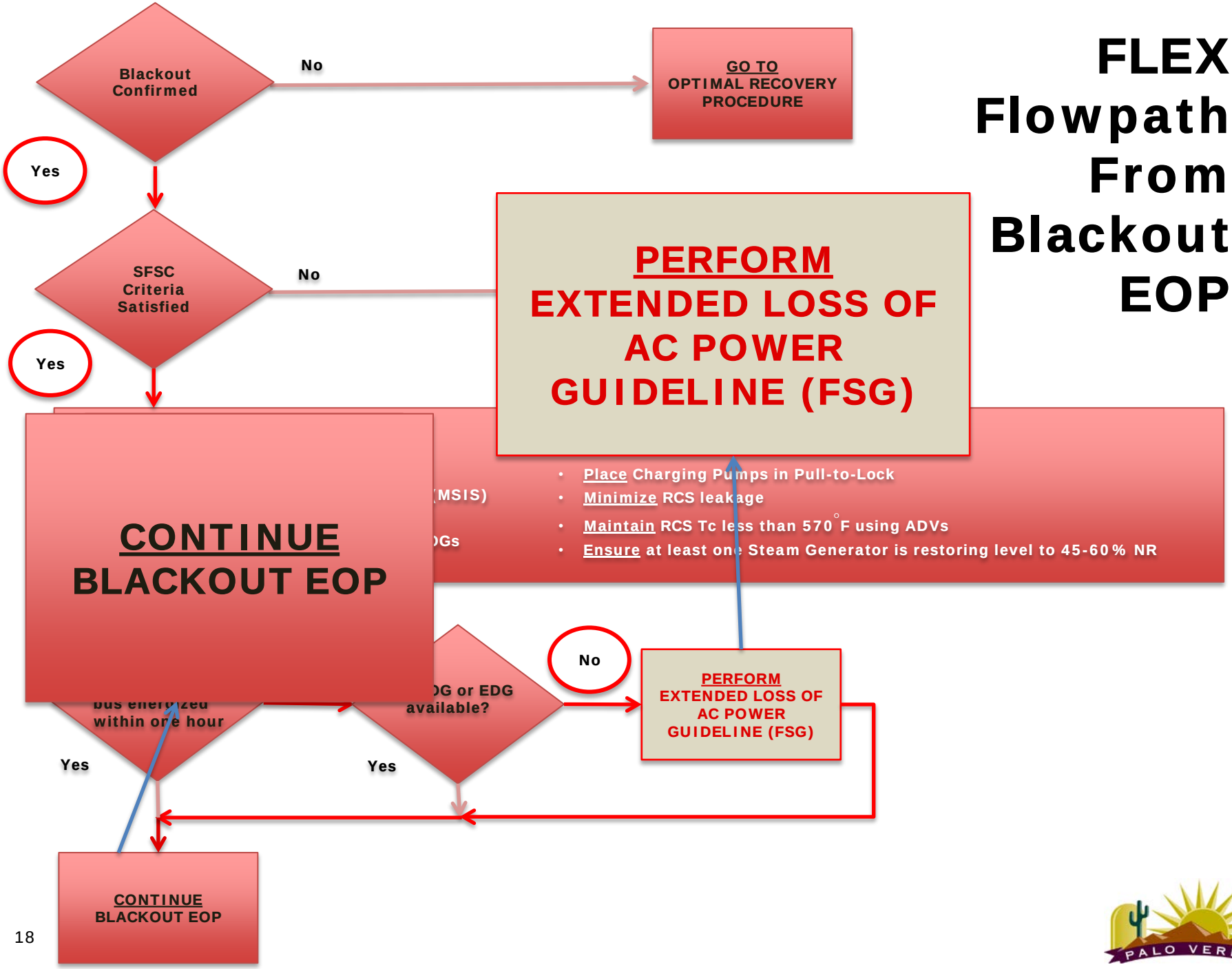

Palo Verde Extended Loss of All Site AC Guideline

FSG/ELAP Purpose

This guideline provides strategies to cope with an extended loss of all site AC power.

The initial focus is to cool the Reactor Coolant System and maintain Spent Fuel Pool inventory/cooling.

RCS Cooldown Logic

Cooling down and depressurizing the Reactor Coolant System reduces the inventory loss.

- Allows Safety Injection Tank (SIT) injection
- RCP seal leakage decreases

Stable T_{cold} Logic

An elevated stable T_{cold} temperature:

- high enough – to allow the Steam Generators (SGs) to supply sufficient steam to the Turbine Driven Auxiliary Feed Water (TDAFW) Pump

- low enough – such that one charging pump capacity is greater than Reactor Coolant Pump (RCP) seal leakage

FLEX Support Guideline (FSG) Entry Conditions

The Emergency Coordinator or Shift Manager may direct entering the FSG when all the following conditions exist in a unit:

- Loss of off-site power
- Loss of emergency diesel generators
- Loss of both station blackout generators
- Any doubt exists that 4160 VAC power can be restored in a timely manner

Event Initiation Timeline

T+0	• Event occurs
T+0 + <5 minutes	• Turbine driven auxiliary feedwater pump starts
T+0 + 15 minutes	• Completion of standard post trip actions
T+0 + 15 minutes	• Enter blackout EOP
< T+1	• Determine if station blackout generators have failed
T+1 (or sooner)	• Enter FSG – Extended Loss of AC Guideline (ELAP)
T+1	• Start battery load shed to extend battery life • Start reactor coolant system cooldown

Battery Load Shed

- Load shed activity takes < 1 hour (using 1 AO)
  - Walk downs performed by Auxiliary Operators
- Selected loads are de-energized
- RCS cooldown accomplished with:
  - “A” Train Auxiliary Feedwater Pump
  - “B” Train Atmospheric Dump Valves (ADVs)
- Selected instrumentation remains energized to monitor the plant
- Load shed lists provide equipment name and breaker number
  - Allows Control Room Supervisor and/or Shift Manager to energize selected loads, as needed

Selected Instruments

- Core Exit Thermocouples (CET)
- Reactor Vessel Water Level
- Steam Generator (SG) Level (Wide Range - WR) and Pressure
- Reactor Coolant System (RCS) T_{hot} , T_{cold} and Pressure
- Subcooling and Saturation Margin – RCS and CET
- Pressurizer Level
- Safety Injection Tanks (SITs) 2A and 2B Level (WR) and Pressure
- Containment Pressure
- Atmospheric Dump Valve (ADV) Position
- Auxiliary Feedwater flow to each SG

Cooldown

- Commence a symmetrical cooldown of the Reactor Coolant System (RCS) at $\geq 70^{\circ}$F per hour – do not exceed 100°F per hour
  - Stabilize RCS temperature at 360°F T_{cold}
  - Steam Generator (SG) pressure of 155 psia

- Feed the SGs using TDAFW pump to maintain 80 – 85% narrow range (NR) level

Event Timeline

T+2	• Complete battery load shed • Open doors to the Turbine-Driven Auxiliary Feedwater Pump (TDAFW) room to provide additional cooling
T+3	• Safety injection tanks begin to inject
T+4	• Cooldown complete
T+16	• Nitrogen to atmospheric dump valves depleted - manual operation, as required
T+34	• 800kW / 480 volts alternating current (VAC) generators installed to supply: o Battery exhaust fans o Battery charger o Charging pump o Control room fans o Pressurizer heaters • Establish SFP makeup

Event Timeline (continued)

T+36	• Install alternate RCS makeup pump
T+38	• Safety Injection Tanks (SIT) empty (10% WR) • Vent SITs • Alternate secondary makeup pump installed
T+42	• Condensate Storage Tank empty • Swap to Reactor Makeup Water Tank or makeup from the Refueling Water Tank
T+72	• Portable 4.16 KV generator (from National SAFER Response Center) installed • Lowest shutdown margin condition reached o Keff = 0.93 • Water from Water Reclamation Facility (WRF) available at the units
T+75	• FLEX alternate secondary makeup pump placed in service and auxiliary feed pump secured

Safety Injection Tank (SIT) Control

<u>WHEN</u> RCS T_{hot} reaches 500°F,

<u>THEN</u> monitor Safety Injection Tank Wide Range Levels for nitrogen injection

<u>IF</u> Safety Injection Tank(s) level lowers to 10% Wide Range Level,

<u>THEN</u> vent the Safety Injection Tanks to the Containment atmosphere

FLEX Support Guideline (FSG) Exit Conditions

The Unit has restored at least one class 4.16 KV bus and is able to return to the appropriate Emergency Operating Procedure

<u>OR</u>

The Emergency Coordinator directs the Unit to enter a procedure determined or developed by the Technical Support Center.

<u>OR</u>

Plant conditions have degraded to a point that entry into the SAMG/EDMG is necessary

Palo Verde Extended Loss of All Site AC Guideline

APPENDICES

Appendix "A" – DC Load Shed

- Extend the life of the class batteries, as long a possible
  - Use "A" Auxiliary Feedwater Pump
  - Use "B" Train ADVs
- Allows for continued operation of the ADVs and TDAFW Pump from the Control Room
- Accomplished as soon as possible (≤ 2 hours after the event)
  - For every minute after required time – battery life is shortened
- Appendix lists breaker number and equipment being supplied

Appendix "B" – Primary Side Walkdown

- Align Spent Fuel Pool (SFP) gate seals
- Deploy portable SFP level and temperature instruments
- Open the Fuel Building roll-up door
- Record the status of primary side equipment
  - Auxiliary Building
  - Containment integrity actions
  - Fuel Building
    - SFP status
  - Outside areas
    - Reactor Makeup Water Tank (RMWT) status
- Verify Dry Cask Storage operations are in a safe condition

Appendix "C" – Secondary Side Walkdown

- Condensate Storage Tank (CST) status
  - isolate CST (lines to condenser) to preserve available water
- Main Turbine Generator actions
  - vent hydrogen from the generator
  - break condenser vacuum
- Isolate the EDG starting air receivers
  - maintain starting air available for recovery of EDGs

Appendix "C" – Secondary Side Walkdown (continued)

Record the status of secondary side equipment

- Turbine Building
  - Nitrogen system
  - Instrument Air system
  - Fire Protection systems
- Main Steam Support Structure
  - TDAFW Pump status
- Outside areas
  - Transformers
  - Spray Ponds

Appendix "D" – Control Room Status of Walkdowns

- Track the information gathered by the Area Operators performing the Primary (Appendix "B") and Secondary Side (Appendix "C") Walkdowns
- Track the status of the station class batteries
- Direct Main Turbine Generator Hydrogen venting
- Track the status of the Diesel Generator Air Start Receivers
- Coordinate with Water Reclamation Facility and Fire Department for providing water to the units
- Track nitrogen usage at the ADVs

Ranking of Makeup Water

COOLANT SOURCE	RANKING
Condensate Storage Tank	1
Demineralizer Water Tank	1
Surge Rinse Tank	1
Reactor Makeup Water Tank	1
Refueling Water Tank	3.7
Raw Well	4
Palo Verde Deep Well	4
Fire Protection Water	4
Domestic Water	5.2
45 – Acre Makeup	6.1
85 – Acre Makeup	6.1
First Stage Clarifier	6.1
Second Stage Clarifier	6.1
Cooling Water Canal	9.1
Evaporator Ponds	9.1

Appendix "K" – Open Door List

- Provide a list of doors which will be opened to implement this guideline
- Notifies Security of which doors are planned to be open
- Doors to be opened:
  - Fuel Building roll-up door
  - TDAFW Pump room doors
  - Control Building doors for:
    - CR ventilation
    - Supply 480 VAC power to the class load centers

Consider implementation of 10CFR 73.55(p) which would result in declaration of 10CFR 50.54(x)

Appendix "T" – FLEX Deployment

- This appendix consists of 3 major attachments:
  - Attachment T-1 – Package 1
    - Communication vehicles
    - 10kW generators
  - Attachment T-2 – Package 2
    - 480 VAC generator
    - RCS makeup pump
  - Attachment T-3 – Package 3
    - 480 VAC generator
    - SFP makeup pump
    - SG makeup pump

Questions?

PALO VERDE

ACRS Presentation Dominion Implementation

Bill Webster

November 19, 2014

Agenda

- FLEX Strategies and Modifications
- BDB Storage Facility
- Phase 3
- FLEX Program
- Communications
- Training
- Validation

FLEX STRATEGIES AND MODIFICATIONS

Dominion Fleet

- Millstone Station 2 Operating Units
  - MP2 – CE PWR
  - MP3 – Westinghouse 4 loop PWR
- North Anna – 2 Units
  - Westinghouse 3 loop PWR
- Surry – 2 Units
  - Westinghouse 3 loop PWR

Strategy Development

- IER 11-4 development provided initial inputs for strategy development
- Strategy developed by multi-discipline team including engineering and operations

Strategy Development cont.

- Strategy included detailed analysis including
  - Battery analysis following load shedding
  - Secondary Auxiliary Feedwater sources analysis
  - Primary calculations in conjunction with Westinghouse PWROG
  - Reactivity analysis to ensure Keff<.99
  - Hydraulic Analysis
  - Ventilation Analysis
  - Electrical Analysis
- Strategies (proposed) documented in Overall Integrated Plan response Feb 2013

Strategy Differences

	North Anna	Surry
STRATEGY	PARAMETERS	
Decay Heat Removal	4 Hours to ECST Depletion Cooldown to 290 psig	4 Hrs to ECST Depletion Cooldown to 300 psig
Decay Heat Removal	Local Manual Operation of PORVs	Local Air Bottle Operation of PORVs
Repowering Instrumentation	8 Hour Battery Life	14 Hour Battery Life
RCS Inventory	17 Hrs Before Make-up Required	17 Hrs Before Make-Up Required
Spent Fuel Pool Make-Up	9 Hrs to Boil 43 Hrs to 10 Ft Above Fuel	12 Hrs to Boil 57 Hrs to 10 Ft Above Fuel

Strategy Differences

	MPS2	MPS3
STRATEGY	PARAMETERS	
Decay Heat Removal	8.4 Hours to CST Depletion Cooldown to 125 psig	22.7 Hrs to DWST Depletion Cooldown to 290 psig
Decay Heat Removal	Local Manual Operation of ADVs	Local Air Bottle Operation of ADVs
Repowering Instrumentation	29 Hour Battery Life	14 Hour Battery Life
RCS Inventory	17 Hrs Before Make-up Required	17 Hrs Before Make-Up Required
Spent Fuel Pool Make-Up	6 Hrs to Boil 30 Hrs to 10 Ft Above Fuel	10 Hrs to Boil 50 Hrs to 10 Ft Above Fuel

BDB Phases

- Strategies used for a BDB Event are divided into 3 Phases
  - **Phase 1** – Cope using installed plant equipment and on-site resources
  - **Phase 2** – Transition from installed plant equipment to on-site portable FLEX equipment
  - **Phase 3** – Additional capability from off-site equipment and resources

Electrical Re-powering Strategy

- Focus on minimum set of key instruments
  - **Phase 1**: Cope using installed plant equipment and on-site resources
    - Operators identify ELAP condition within first 45 minutes
    - Operators shed non-essential loads from battery in next 30 minutes (breakers/fuses in 125V DC distribution cabinets)

	NAPS	SPS	MPS2	MPS3
Battery Extension	8	14	29	14

Electrical Re-powering Strategy

- **Phase 2:** Transition from installed plant equipment to on-site portable FLEX equipment
  - Primary - Re-power essential vital AC loads (Instrumentation) from 120 VAC portable EDGs
  - Alternate - Re-power essential vital AC loads (Instrumentation) from 480 VAC portable EDGs

Electrical Re-powering Strategy

- **Phase 3:** Additional capability from off-site equipment and resources
  - 4160 VAC generator from off-site Regional Response Center
    - Includes cabling, connectors and necessary distribution panels

120 VAC Connection

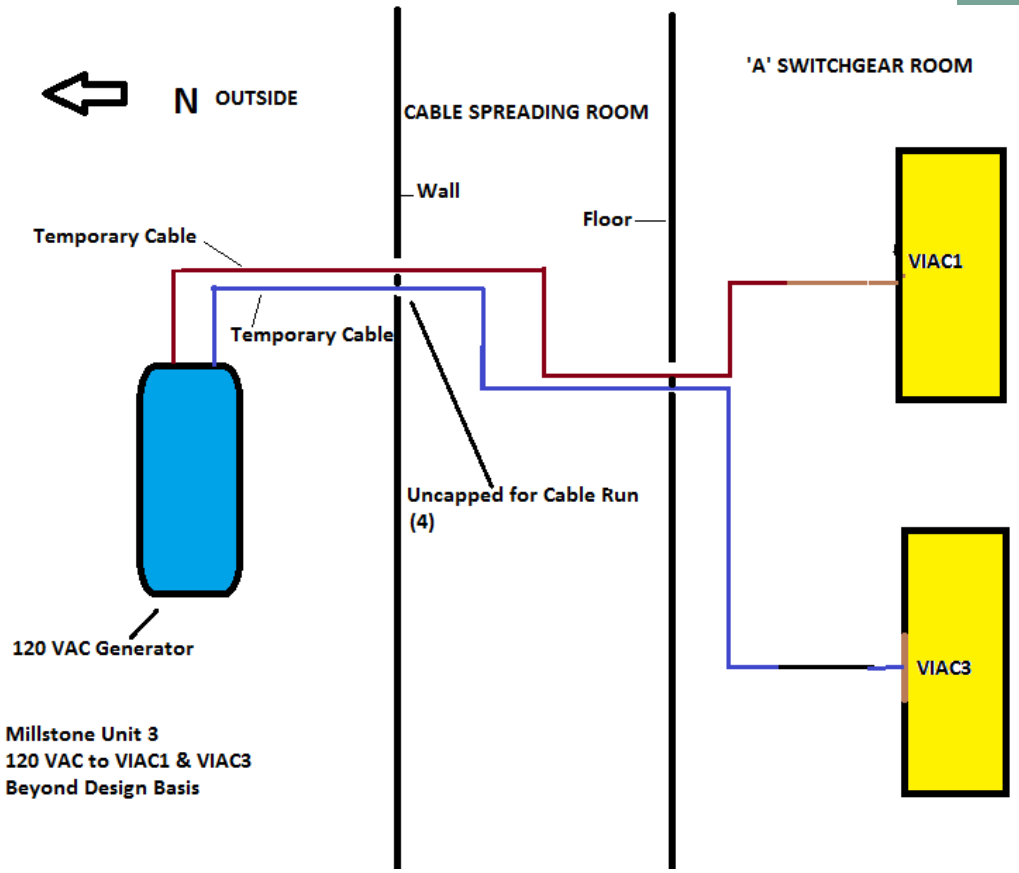

480 VAC Connection

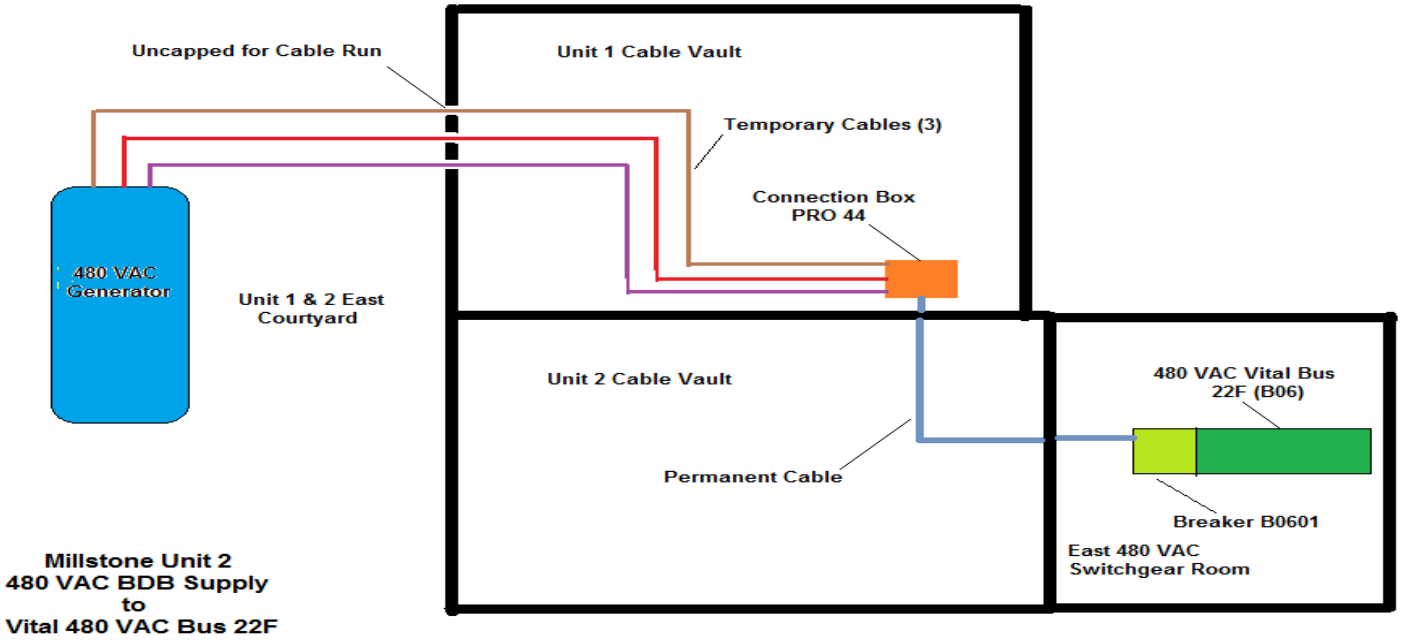

4160 VAC Connection

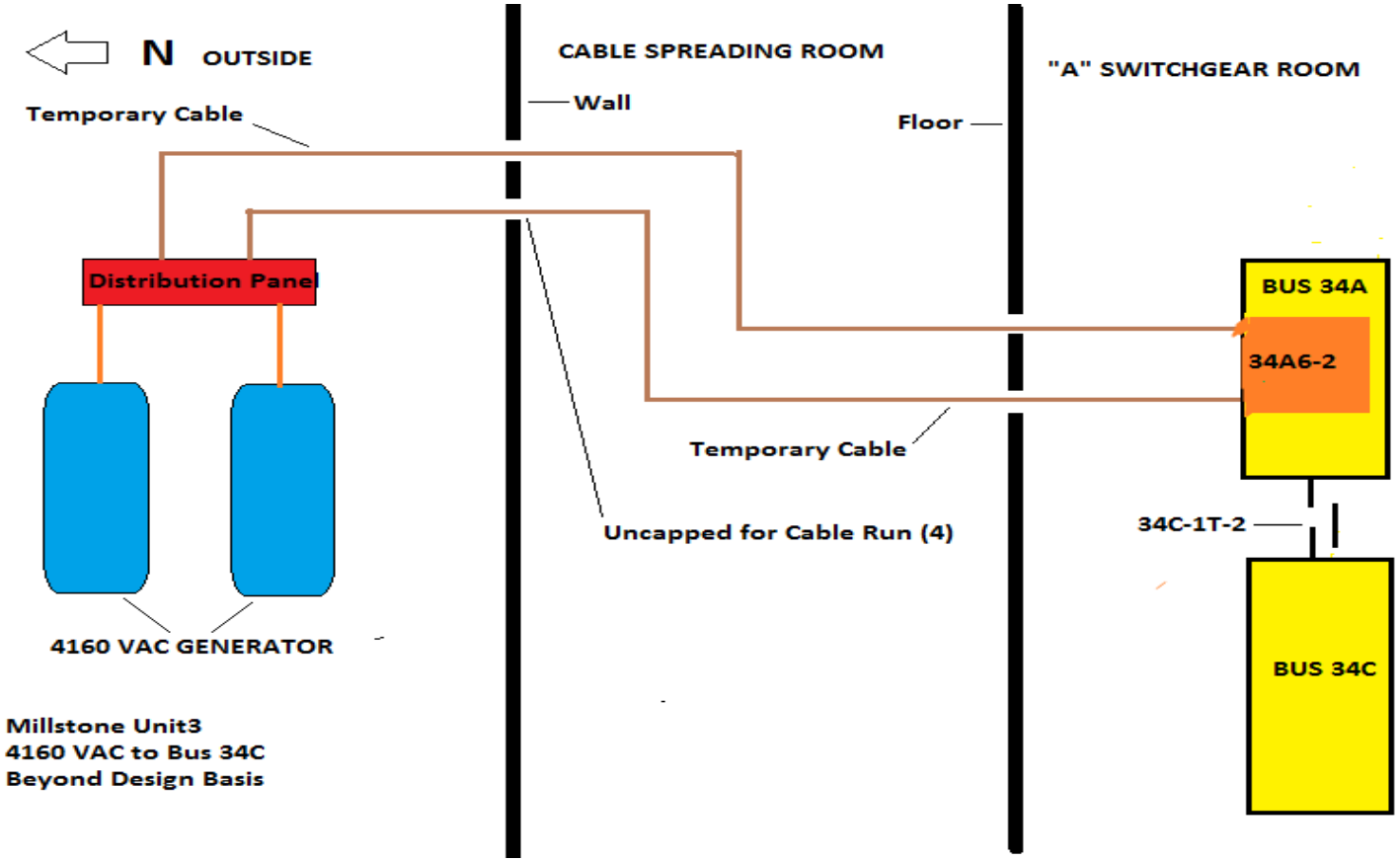

480 & 120 VAC Connections

Diesel Generators

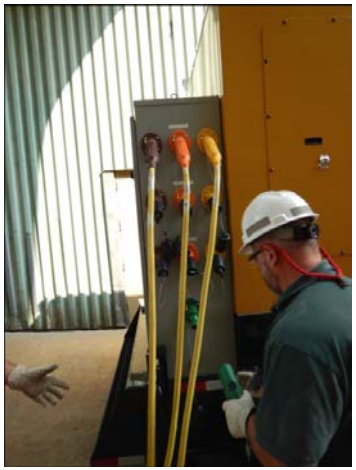

Decay Heat Removal Strategy

- **Phase 1:** Cope using installed plant equipment and on-site resources
  - TDAFW supplying SGs from Emergency Condensate Storage Tank

Decay Heat Removal Strategy

- **Phase 2:** Transition from installed plant equipment to on-site portable FLEX equipment
  - Portable BDB High Capacity pump from long term water supply to AFW supply
    - ECST re-fill connection
    - 300 gpm for suction supply for AFW (each unit) to 300 psig SG
  - Also provides capability to supply SFP

Decay Heat Removal Strategy

- **Phase 2:** (Continued)
  - Portable BDB AFW Pump
    - Primary Connection: Transition from TDAFW pump to portable BDB AFW pump injecting into AFW header
    - Alternate Connection: Transition from TDAFW pump to portable BDB AFW pump into Feedwater or Blowdown connections

AFW ECST Hose Connection

ECST Fill & AFW PP Supply

BDB AFW Pump Discharge to AFW Header

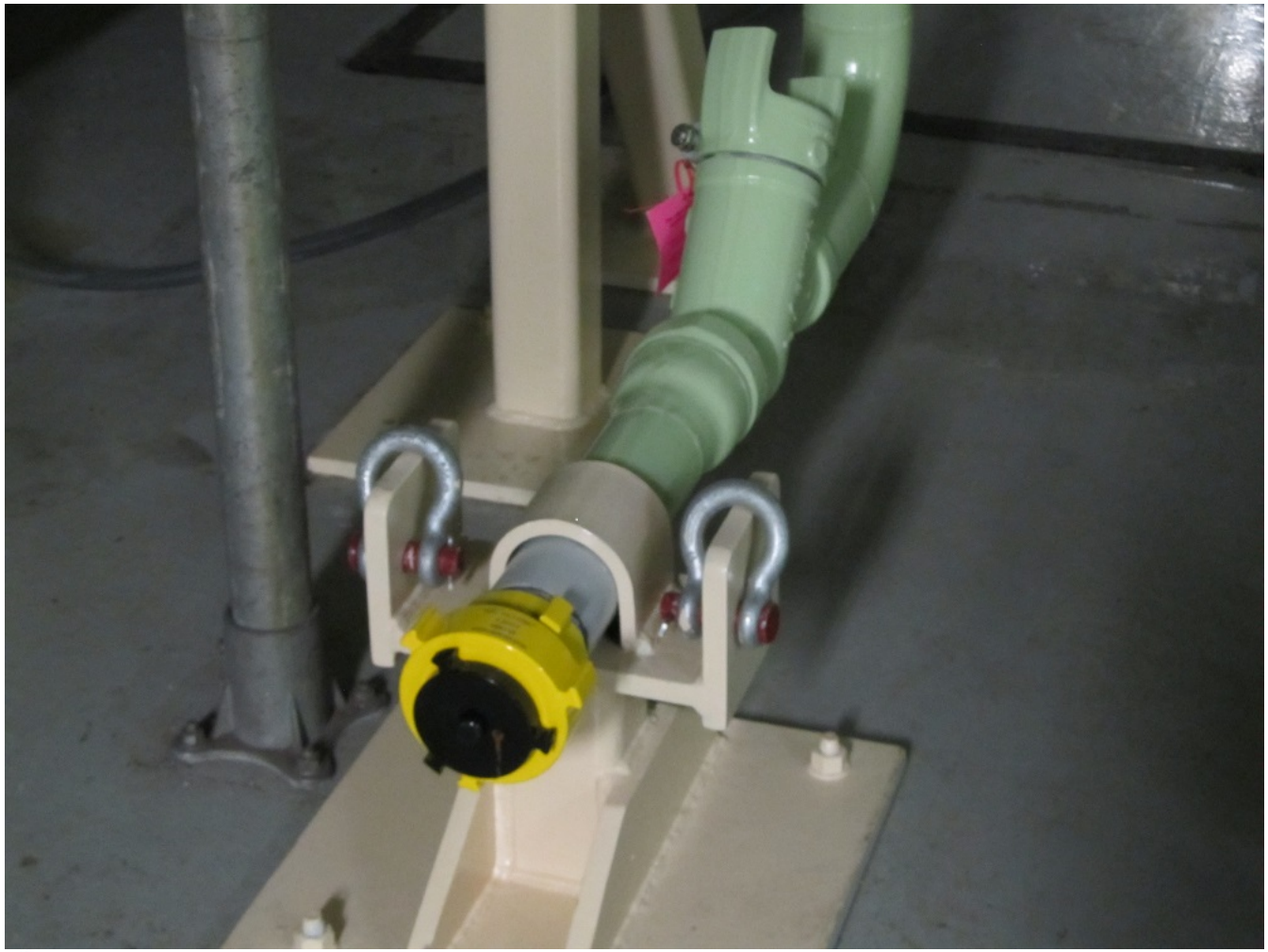

BDB High Capacity Pump

BDB AFW Pump

Decay Heat Removal Strategy

- **Phase 3:** Additional capability from off-site equipment and resources
  - 4160 VAC and additional 480 VAC generators brought on-site beginning at 26+ hours to provide additional support
  - Access to additional diesel-powered AFW pumps, hoses, fittings etc.
  - Water Purification Units

RCS Injection Strategy

- **Phase 1:** Cope using installed plant equipment and on-site resources
  - RCS cooldown to target Steam Generator Pressure (beginning at 2 hours)
  - Times dependant upon integrated seal leakage following loss of seal cooling
    - Dominion is replacing all Westinghouse seals with Flowserve Seals. Calculations include partial replacements at time of compliance

Time to Inject prior to Reflux Boiling and to ensure Keff<.99	**17 hours**

RCS Injection Strategy

- **<u>Phase 2:</u>** Transition from installed plant equipment to on-site portable FLEX equipment
  - Two BDB RCS Injection pumps on each site taking suction from RWST
  - Primary MP2: Repower Charging Pump from BDB 480 VAC Generator with suction from RWST or Boric Acid Storage Tanks

BDB RCS Injection Pump Discharge to SI/RCS

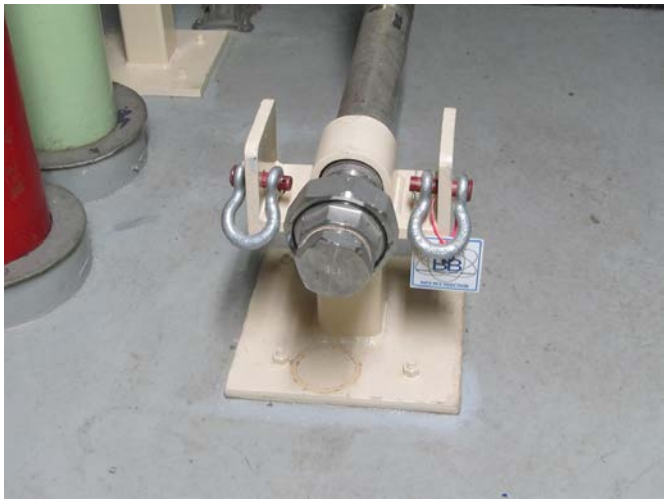

Containment Cooling Strategy

- **<u>Phase 1:</u>** Cope using installed plant equipment and on-site resources
  - Verification of containment integrity during ECA-0.0 (EOP2530)
  - Analysis indicates containment integrity is not challenged at 1 week

Procedure Development

FSG-1: Long Term RCS Inventory Control	FSG-9: Low Decay Heat Temperature Cont.
FSG-2: Alternate AFW Source	FSG-10: SI Accumulator(SIT) Isolation
FSG-3: Alternate Low Pressure Feedwater	FSG-11: Alternate SFP Makeup and Cooling
FSG-4: ELAP DC Bus Load Shed/Mgmt	FSG-12: Alternate Containment Cooling
FSG-5: Initial Assessment & Equip Staging	FSG-13: Transition from FLEX Equipment
FSG-6: Alternate DWST (CST) Makeup	FSG-14: Modes 5/6 Response
FSG-7: Loss of Vital Inst or Control Power	FSG-15: 4160 VAC Repowering
FSG-8: Alternate RCS Boration	

BDB Storage Building

BDB Storage Building

Deployment Vehicles

Deployment Vehicles

Deployment Vehicles

FLEX PHASE 3

National Safer Response Center

- T-0 – Notification by Main Control Room
- T-2 – Mobilization (SAFER Team)
- T-4 – Begin transportation to off-site staging area (SA)
- T-20 – Equipment arrives at SA; begin preparation
- T-22 – Transportation to on-site staging area
- T-24 – First equipment on-site

RRC Staging Area B

SAFER Response Plan

1. Introduction
2. SAFER Control Center
3. Regional Response Center
4. Logistics & Transportation
5. Staging Area
6. Site Interface
7. Equipment Listing

Each site has an individualized, specific Response Plan used by all organizations during the response

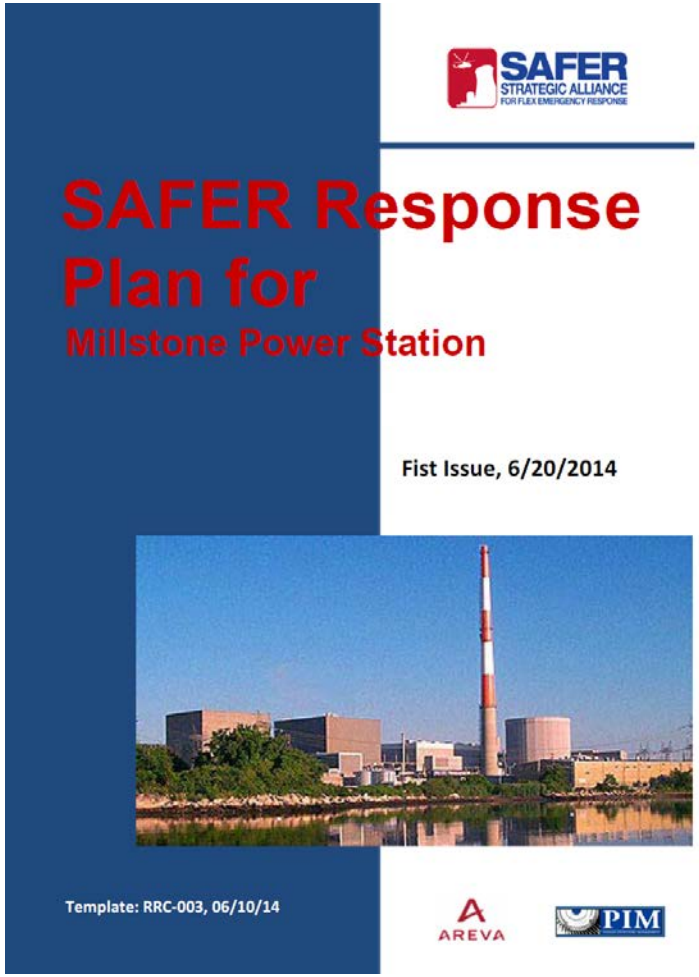

Site Single Point of Contact

- Coordinate and Communicate with SAFER Team
- Emergency Plan Integration
  - Contact with State and Local
  - Contact with Federal through NRC
  - Includes request for helicopter assets if required

NSRC Equipment For Dominion

- 4kV turbine generators
- 480VAC turbine generators
- High Pressure Pump (60 GPM)
- Low Press/Med Flow Pump (2500 GPM)
- Low Pressure/High Flow (5000 GPM)
- SG/RPV Makeup Pump (500 GPM)

- Mobile Boration Unit (9000 GAL)
- Water Treatment
- Submersible Pump(s) (75 PSI / 1000 GPM)
- Portable Air Compressors (600 SCFM / 150 PSI)
- Suction Booster Lift Pumps for High Flow Pumps

BDB Program Elements

- Quality attributes
- Equipment design
- Equipment storage
- Procedure guidance
- Maintenance and testing
- Training
- Staffing
- Configuration control

Program Basis Interface

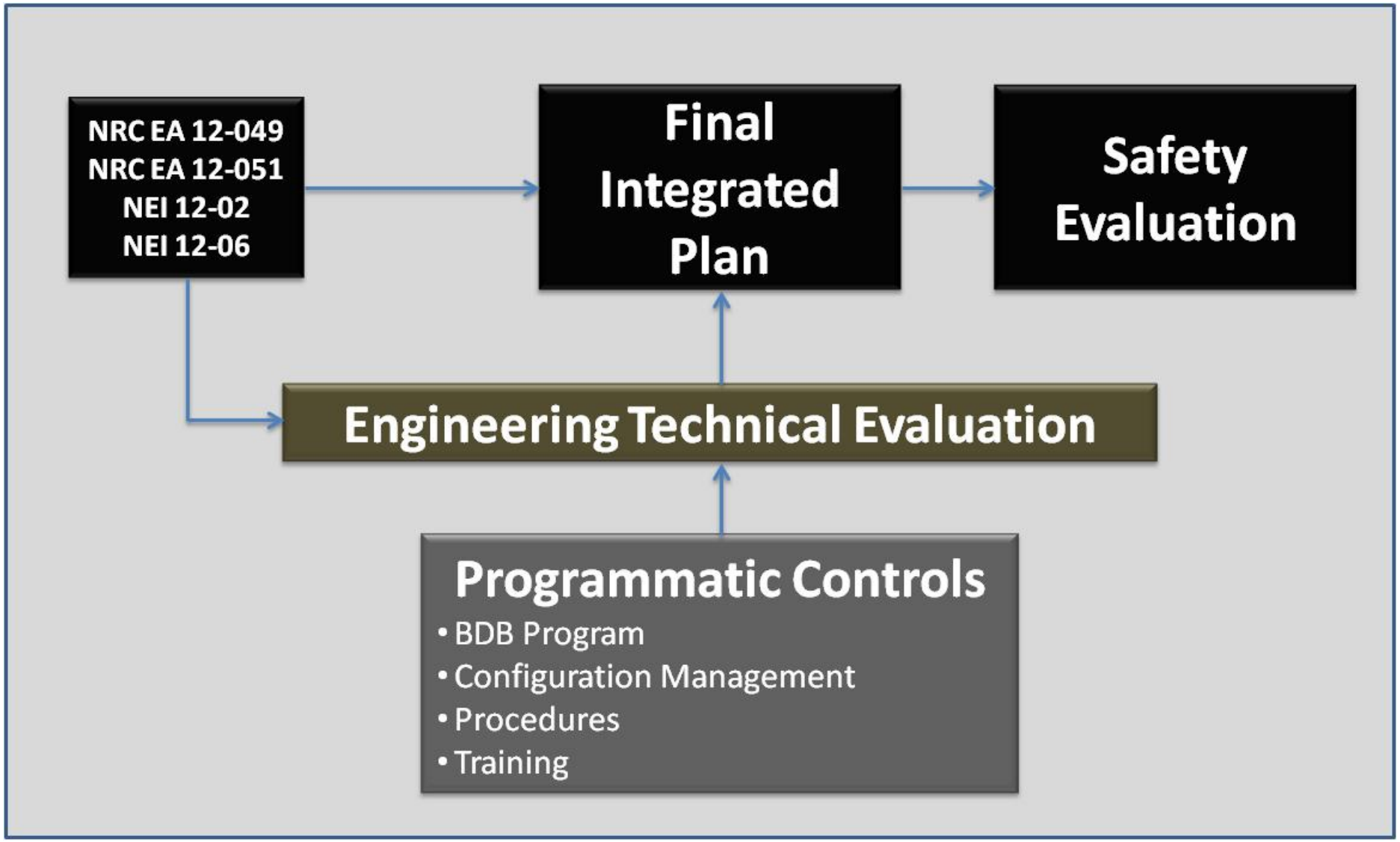

Program Interface

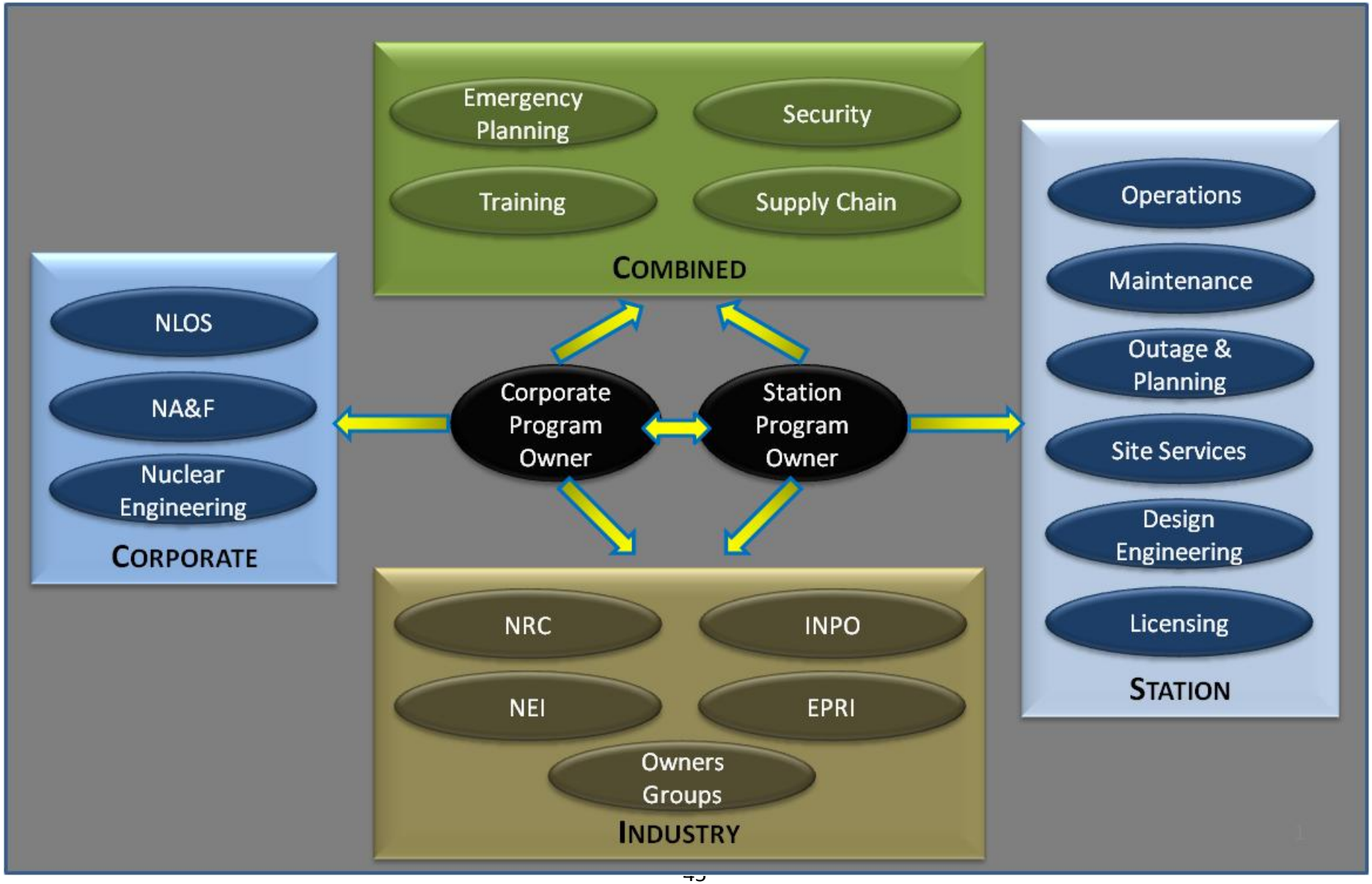

COMMUNICATIONS

Off-site Communication Strategy

- At T= 0 – 1 hrs, portable Iridium satellite phones used for initial emergency notification of Offsite Response Organization (OROs), NRC, and internal emergency response facilities
- At T=1 – 3 hrs, ComLabs Rapidcase and Satellite Antenna deployed and connected to switch in U3 Control Room Computer Room. Desk set phones will be used in Control Room
- At T > 6 hrs, ComLabs RapidCom portable communications trailer will be deployed – long term off-site communications

Onsite Communication Strategy

- Sound Powered phones or point to point 450 MHz portable radios
- Intra-Control Room Communications – No communications between control rooms initially. Military sound-powered phones will be deployed by two individuals < 1 hr from T = 0

BDB Communications Components

- Commlabs Rapid-case and satellite antenna dish will be stored in the TSC Ventilation Equipment Room

Satellite antenna and positioner:

Rapidcase:

BDB Communications Components (Cont.)

- ComLabs RapidCom portable communications trailer will be stored in the FLEX Storage Building
- Long-term communications strategy

TRAINING

Introduction

- SAT Process
- Training Disciplines
- Phased Approach
- Multiple Discipline Training

SAT Process

- Analysis based on:
  - NRC Orders
  - NEI 12-06 – Diverse and Flexible Coping Strategies (FLEX) Implementation Guide
  - IER 13-10 – Nuclear Accident at the Fukushima Daiichi Nuclear Power Station
  - Design changes & engineering technical evaluations
  - PWR Owner Group documents, new FLEX support guidelines, & ECA-0.0 changes
  - New BDB portable equipment

Training Disciplines

- Operations
- Security
- Maintenance
- Emergency Response Organization
- Other Disciplines

Phased Approach

- Design changes for mechanical & electrical connections
- BDB Overview Training across program disciplines
- FSGs & FLEX equipment based on training analysis results for each training discipline and the ERO

Phased Approach

- Analyze the common training modules developed by INPO Emergency Response Training & Development (ERTD) industry working group for implementation
- JTA results integrated into Operations initial and continuing training task lists
- Evaluate any delta training needs based on the approved FSGs & equipment

Operations Training

- Operations
  - JTA completed with the additional of 8 new BDB tasks
  - BDB Overview Training
  - FSG & BDB Equipment Training

Engineering and Security Training

- Engineering
  - BDB Overview Training
- Security
  - BDB Overview Training
  - Training analysis for debris removal and equipment hauling

Leadership Training

- Station Leadership
  - SOER 10-2 Engaged Thinking Organization-IER 13-10 Fukushima case study
  - Evaluation of new INPO course for decision makers in Leadership Training

ERO Training

- ERO Training
  - Failure Mode Training for operators, STAs, and ERO (engineering/technical) staff
  - BDB/FLEX Training position specific training
  - INPO course for Basic ERO Training module or equivalent for general plant staff
  - INPO course for Advanced ERO Training module for ERO decision makers

VALIDATION

Validation Process

- Guideline developed by NEI
- A graded approach for validation is used in order to apply a higher level of detail and rigor to validations for TSAs that occur shortly after the event.
  - Level A: Used for TSAs started within the first 6 hours
  - Level B: Used for TSAs started between 6 and 24 hours after the event
  - Level C: Other tasks or manual actions in the OIP/FIP that are labor intensive or

Validation Process

- Consideration of the following Performance Attributes
  - Special Equipment
  - Complexity
  - Cues and Indications
  - Special Fitness Issues
  - Environmental Factors and Accessibility
  - Communications
  - Special Considerations

Validation Time Sensitive Actions

	Activity	*Start*	*Duration*	Time Constraint	*Requirement*
	Event Starts				*Plant @ 100% power*
	TDAFW pump starts. Verify flow to "A" SG.			N	*Original design basis for SBO event. 50 min to "A" SG dryout.*
	Loss of All Power Procedure is entered			N	*SBO event required response* [1]
	Verify RCS Isolation	*15 min*		N	*Establishes long term inventory in the RCS*
	Re-Align AFW to all SGs	20 min	10 min	Y	50 min (to "B" and "C" SG dryout, 1 hr to "A" SG overfill)
	ELAP declared	60 min		Y	
	Initiate Load Stripping	60 min	30 min	Y	90 min (will give you an 8 hour battery life)
	Start DDFP and/or align SW	90 min	60 min	Y	4.2 hrs (prior to min. ECST level)
	Re-power 120 VAC Vital Buses	60 min	4 hr	Y	8 hrs (battery depleted)

Validation

Example Battery Load Stripping

FLEX (BEYOND DESIGN BASIS)
NORTH ANNA POWER STATION VALIDATION PROCESS

Validation Plan # N1-8B

A. Validated Item Results					
Item: Unit 1 Vital 120 VAC Bus load stripping. (TSA)		Level: ☒A☐B☐C		Time Constraint: ≤ 90 minutes from the start of the event	
ACTION ITEM # FROM OIP ATTACHMENT 1A	TASK	START TIME	TIME CONSTRAINT	SUCCESS CRITERIA (TIME CONSTRAINT MINUS START TIME)	RESULTS (SUM OF TIMES MEASURED DURING VALIDATION PROCESS)
8	Unit 1 DC load stripping completed (TSA)	65 MINUTES	90 MINUTES	25 MINUTES	17 MINUTES
Margin = 25 minutes – 17 minutes = 8 minutes					

Validation

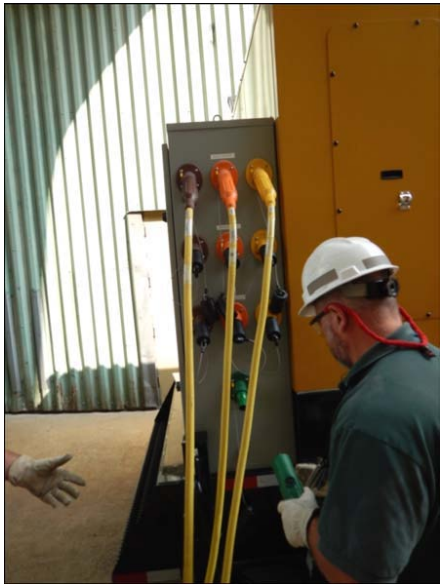

Validation

UNIT 1 AFW PUMP DISCHARGE HEADER
BEYOND DESIGN BASIS
2.5" NH ROCKER LUG – YELLOW

Nine Mile Point Nuclear Station
FLEX Implementation
November 20, 2014

Presentation Topics

- Overall Project Status
- Initial Control Room Response to Station Blackout (DVD)
- FLEX Mitigation Strategies Overview
- FLEX Storage and Deployment
- Reliable Spent Fuel Level Instrumentation
- NRC Audit Summary of FLEX/SFPLI Implementation Plan

Overall Project Status

- NMP1 implements FLEX – April 2015
- NMP2 implements FLEX – April/May 2016
- NMP1 and NMP2 implements SFPLI – April 2015
- Communications improvements – April 2015
- FLEX Support Guideline development is approximately 70% complete
- Operations Training for FLEX has started and is scheduled to complete by 1/2/15
- Operations Training for SFPLI has been completed
- Robust Structure construction will complete in February 2015

Initial Control Room Response to Station Blackout

- Event Initiation
  - Multiple annunciators and indications for loss of power
  - Control Room lighting shifts from normal to emergency power
- Event Recognition
  - SRO updates crew on plant status, loss of offsite power and no diesel start
  - SRO enters Emergency Operating Procedures (EOPs)
- Plant Stabilization
  - Reactor power control – confirm reactor shutdown
  - Reactor pressure control – stabilize pressure on SRVs, 900 PSIG
  - Reactor level control – Reactor Core Isolation Cooling (RCIC) auto start, monitor level response. Initially out of desired band due to plant automatic shutdown, void collapse and RCIC start time. Water level recovers to band directed by EOPs with continued RCIC operation
- Enter Station Blackout procedure
  - Load shedding to preserve DC power
  - Power restoration
  - FLEX portable equipment deployment / notify National SAFER Response Center
  - Plant environmental condition actions/RCIC preservation actions

FLEX Mitigation Strategies Overview – NMP1

NMP1 Design

BWR 2 – Mark I Containment
1850 MWth
Commercial operation in 1970
Licensed to operate until 2029

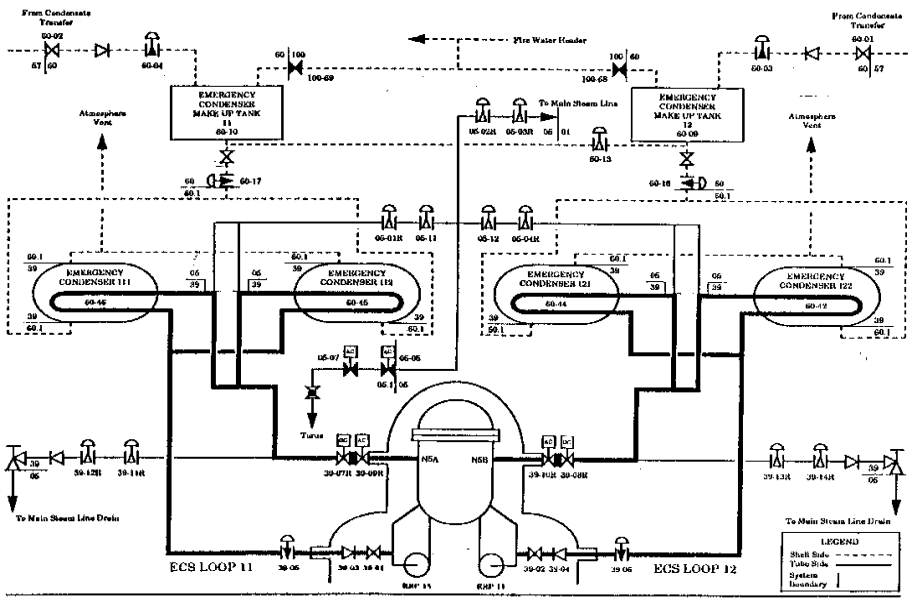

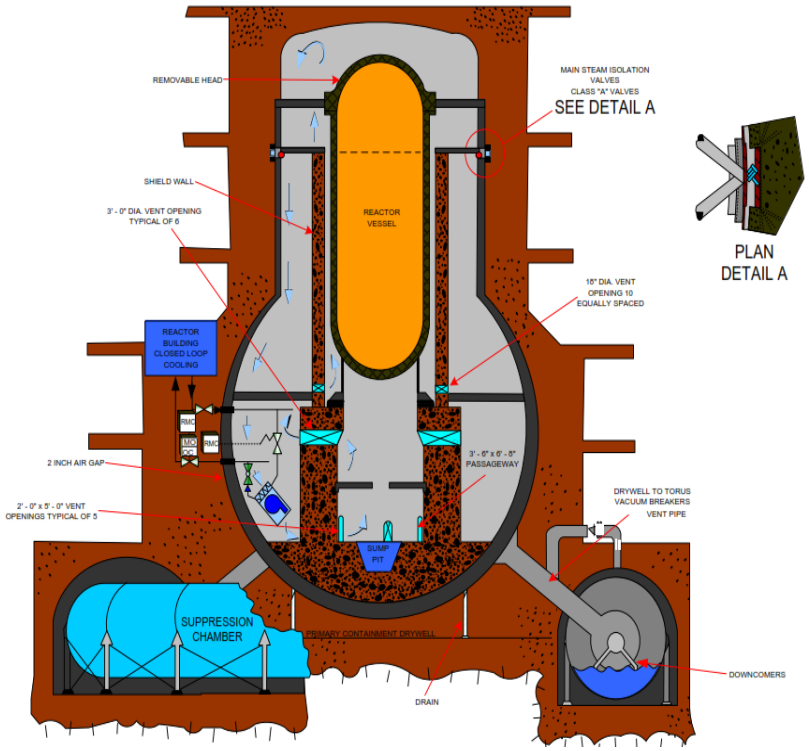

Emergency Condenser Testing

NMP1 Core and Containment Cooling – Phase 1

Phase 1 Core Cooling at NMP1 is accomplished utilizing the Emergency Condensers (EC) (i.e. Isolation Condensers) to remove heat and discharge the heat directly to the atmosphere (versus into the containment)

- ECs will go into service automatically on loss of power
- Planned manual action will further reduce RPV inventory loss
- RPV pressure lowers as a result of the ECs in service
- RPV level will remain above TAF for 5.7 hours after event initiation
  - Deployment of portable pump for RPV injection in 4 hours
- Electrical power for critical parameter monitoring is maintained for at least 8 hours on the station battery
  - Deployment of portable generator for DC power in 6 hours

NMP1 Core and Containment Cooling – Phase 2

- Provide RPV and EC makeup capability utilizing a diesel driven portable pump
- Modifications
  - Screen House wall openings and hinged intake covers in order to provide access for suction hoses
  - Connection and valve for portable pump hose to RPV injection point (RB EL. 261’)
  - Connection and valve for portable pump hose to EC #12 shell side (RB EL. 318’)

NMP1 Core and Containment Cooling – Phase 2 (cont'd)

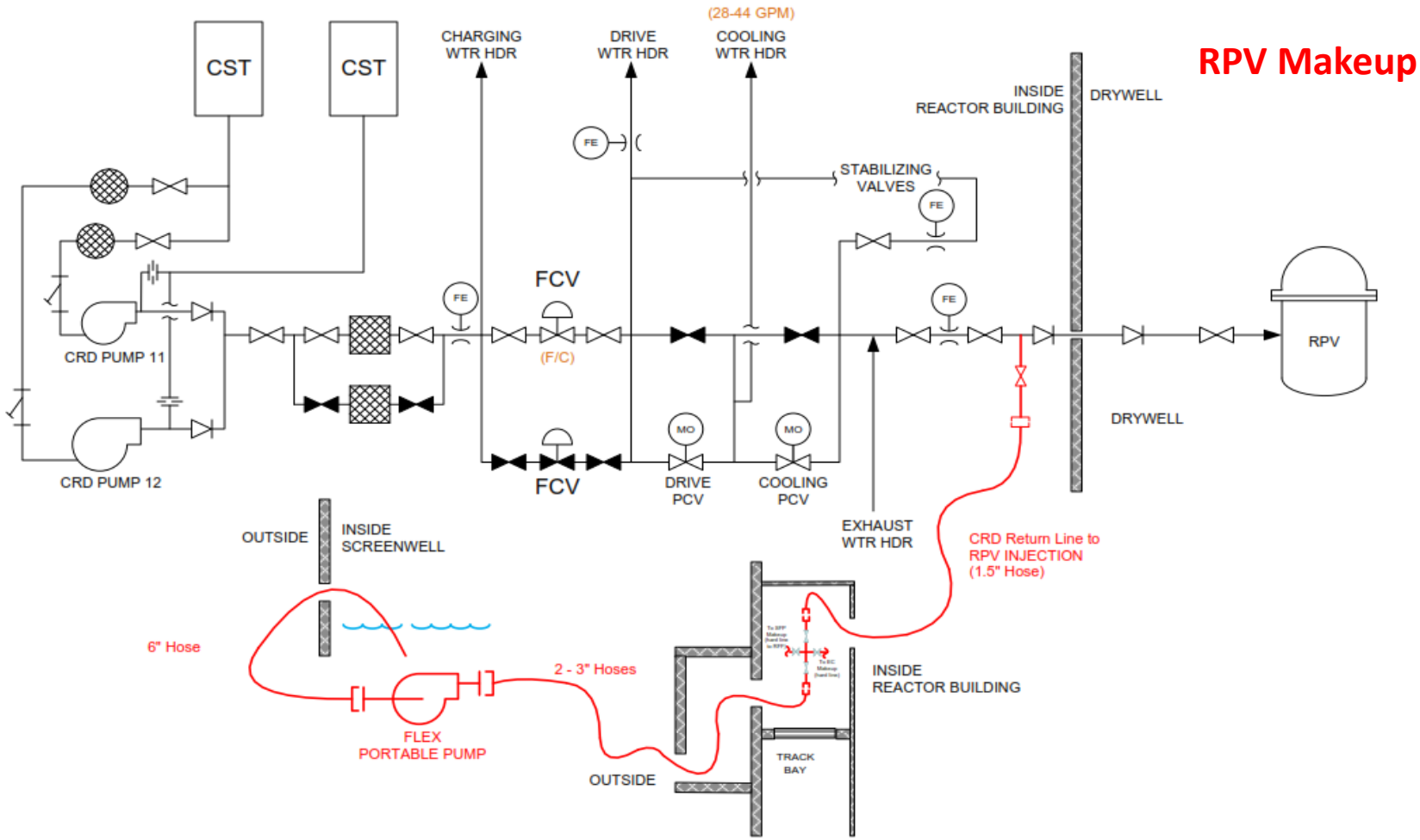

NMP1 Core and Containment Cooling – Phase 2 (cont'd)

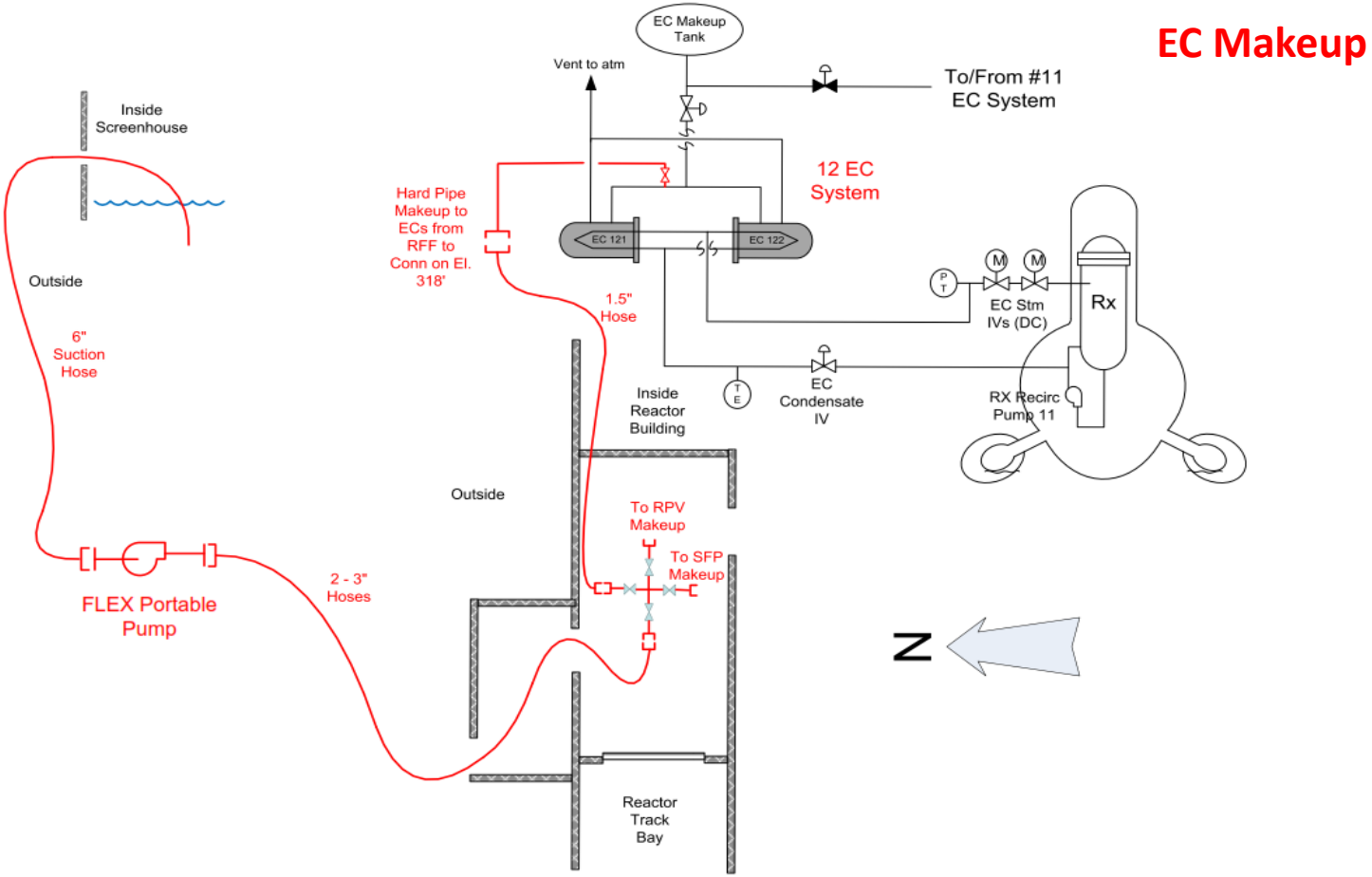

NMP1 Spent Fuel Cooling – Phase 1

- Phase 1 Spent Fuel Cooling at NMP1 is accomplished by utilizing the initial Spent Fuel Pool level and water inventory
  - Design basis heat load analysis
    - 8 hour heatup from 140°F to 212°F (note that normal SFP water temperature is <100°F)
    - 45 hours to reach level 2 (10 feet above fuel)
    - 42.8 gpm makeup rate for decay heat boil off

NMP1 Spent Fuel Cooling – Phase 2

- Provide SFP makeup capability utilizing a diesel driven portable pump
- Modifications
  - Screen House wall openings and hinged intake covers in order to provide access for suction hoses – same as RPV/EC makeup
  - Installation of a SFP makeup line from the Refuel Floor to the next elevation down (RB EL. 318’) to provide for connection of portable pump discharge hose

NMP1 Spent Fuel Cooling – Phase 2 (cont'd)

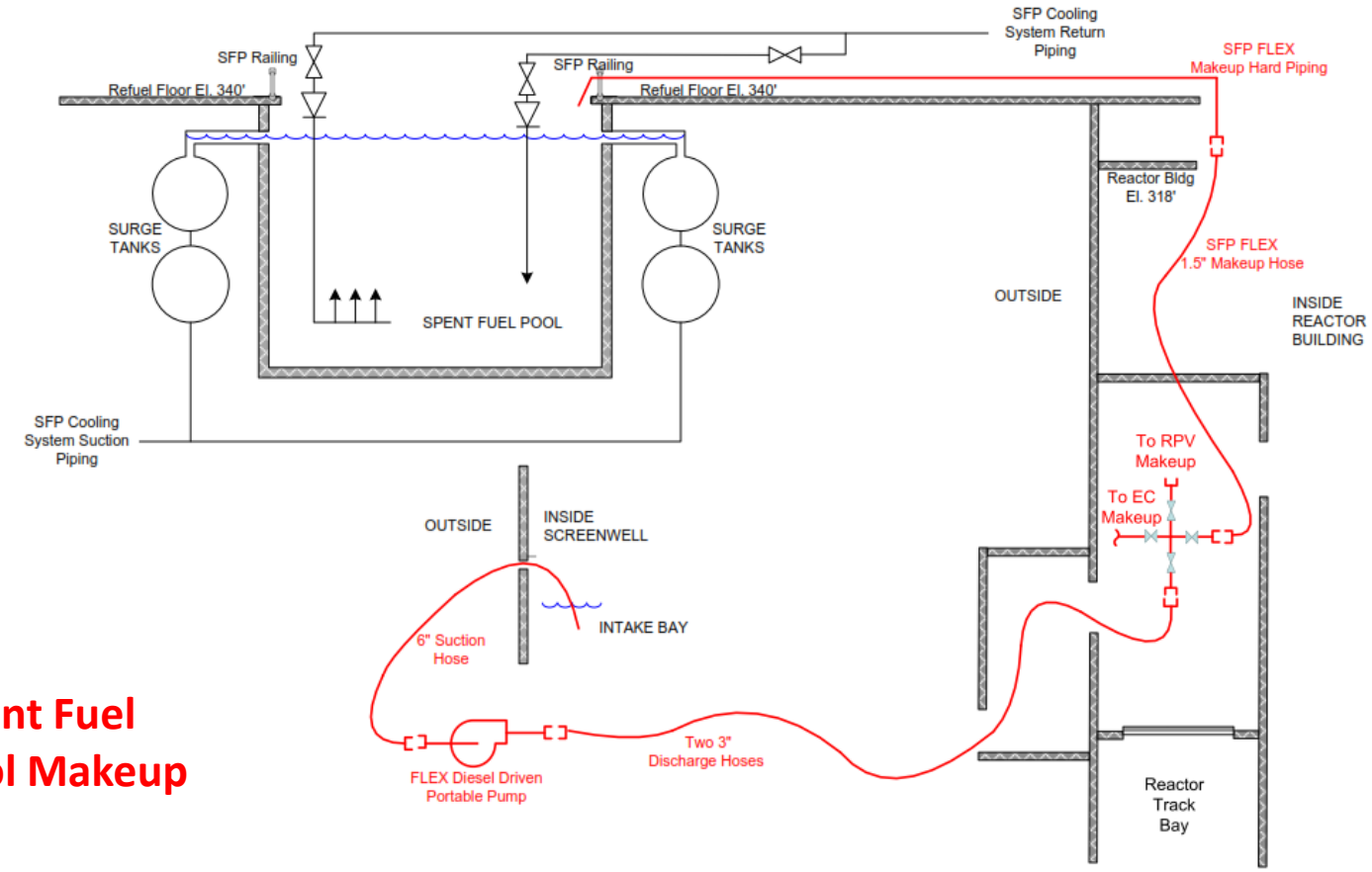

Spent Fuel Pool Makeup

NMP1 Alternative Makeup Capabilities

- Alternative for RPV makeup
  - Hose to the fire water to feed water cross-tie connection in the Turbine Building (shown)
- Alternative for EC makeup
  - Hose to the fire water system that can cross connect and feed the EC makeup tanks in the Turbine Building
- Alternative for SFP makeup
  - Hose up the Reactor Building north stairwell to the Refuel Floor

NMP1 Electrical Power – Phase 1

- Safety Related batteries will provide sufficient power such that all critical parameters will be available for at least 8 hours
  - This analysis is dependent upon load shedding occurring within 30 minutes following an event

NMP1 Electrical Power – Phase 2

- Portable diesel generator to be deployed to connect to the AC power side of an installed station battery charger
- Alternatively, a portable Static Battery Charger (SBC) is available to provide power with the portable diesel generator and connect to either Battery Board 12 or Battery Board 11
  - This is a combined modification that utilizes the NFPA 805 electrical restoration requirements for mitigation strategies
  - NFPA 805 related equipment will be stored in the protected (FLEX Building) location to support this

NMP1 Electrical Power – Phase 2 (cont'd)

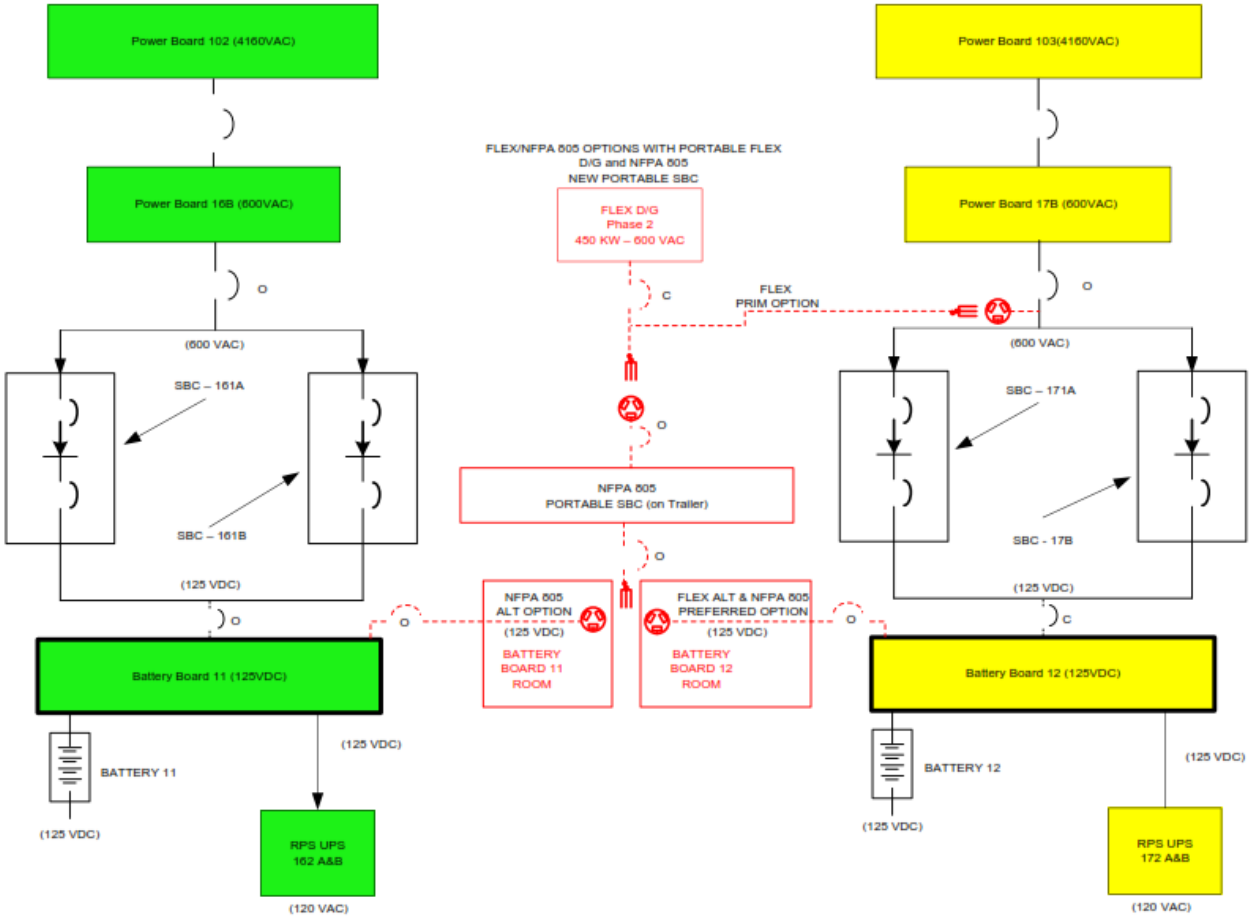

NMP1 – Phase 3

- Mitigation strategies identified and put in place in Phase 2 can provide for indefinite coping of key safety functions
- Analysis performed supports that the strategies directly intended to satisfy key safety functions will restore or maintain those key safety functions for at least 72 hours
- Other equipment supplied from the National SAFER Response Center (NSRC) will utilize Phase 2 connections and act as spares to the existing Phase 2 equipment

FLEX Mitigation Strategies Overview – NMP2

NMP2 Design

BWR 5 Mark II Containment

3988 MWth

Commercial operation in 1988

Licensed to operate until 2046

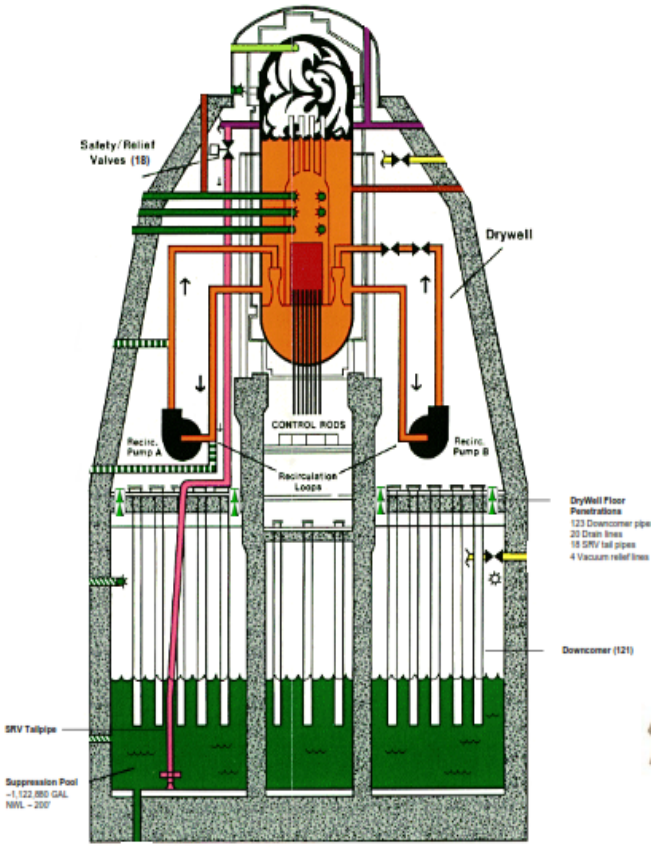

NMP2 Core and Containment Cooling – Phase 1

- Phase 1 Core Cooling at NMP2 is accomplished utilizing Reactor Core Isolation Cooling (RCIC) and the Safety Relief Valves (SRV's) to remove heat and discharge the heat to the Suppression Pool
  - Preliminary analysis indicates acceptable containment temperature and pressure for at least 6 hours to support RCIC operation with no containment venting
  - Deployment of portable pump for RPV injection in 4 hours
  - Electrical power for critical parameter monitoring is maintained for at least 12 hours on the station battery

NMP2 Core and Containment Cooling Phase 1 (cont'd)

- SRV's will be cycled to maintain adequate pressure to run the RCIC system
- Site specific analysis is planned to determine the length of time that RCIC may be functional beyond 6 hours with containment venting
- Containment vent (EA-13-109 wetwell vent) will be opened to maintain the Suppression Pool temperature at or below 240°F
  - Prolong RCIC operation beyond 6 hours
  - Reduce the challenge to the Primary Containment
  - Installation in Spring 2016

NMP2 EA-13-109 Wetwell Vent Design

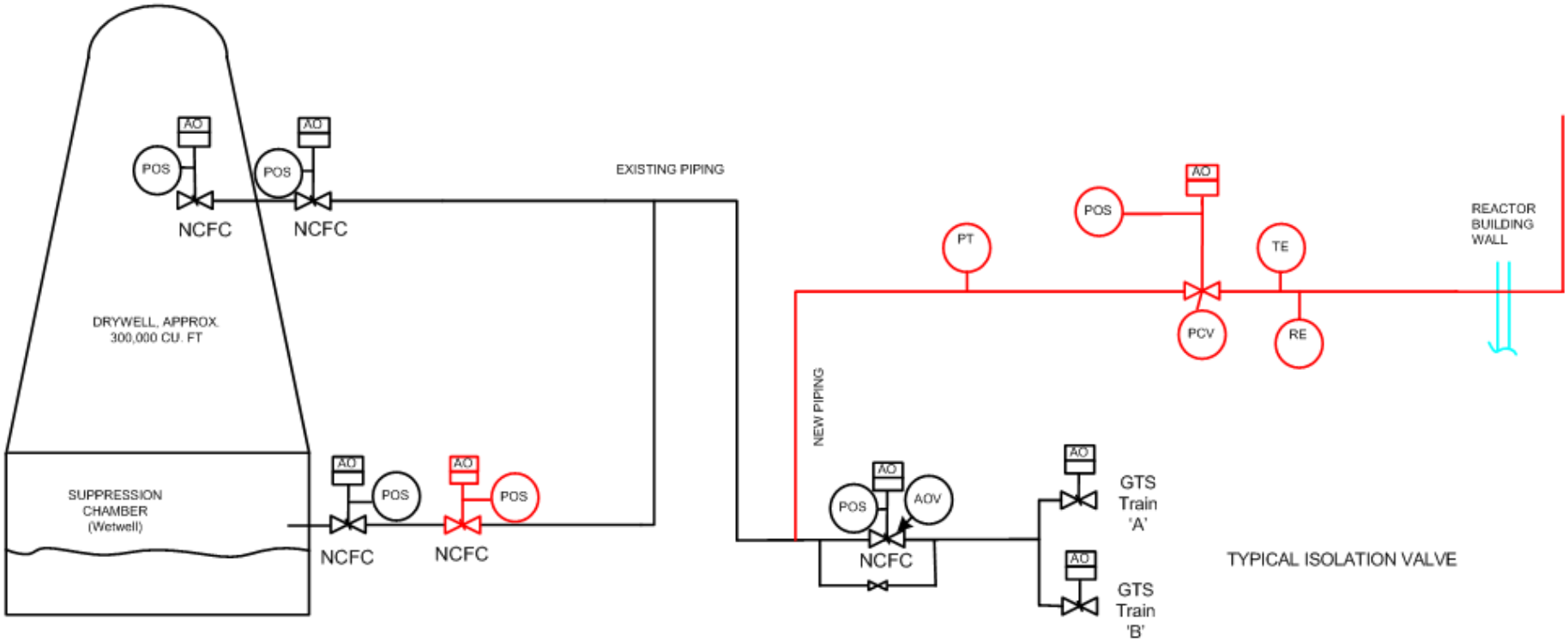

NMP2 Core and Containment Cooling – Phase 2

- Provide RPV makeup capability utilizing a diesel driven portable pump
- Modifications
  - Dry hydrants to be installed in the Service Water tempering line thereby creating a suction path from the intake and/or discharge structure
  - Connection and valve for connecting the portable pump hose to RHR (RB EL. 289’)

NMP2 Core and Containment Cooling Phase 2 (cont'd)

RPV and SFP Makeup

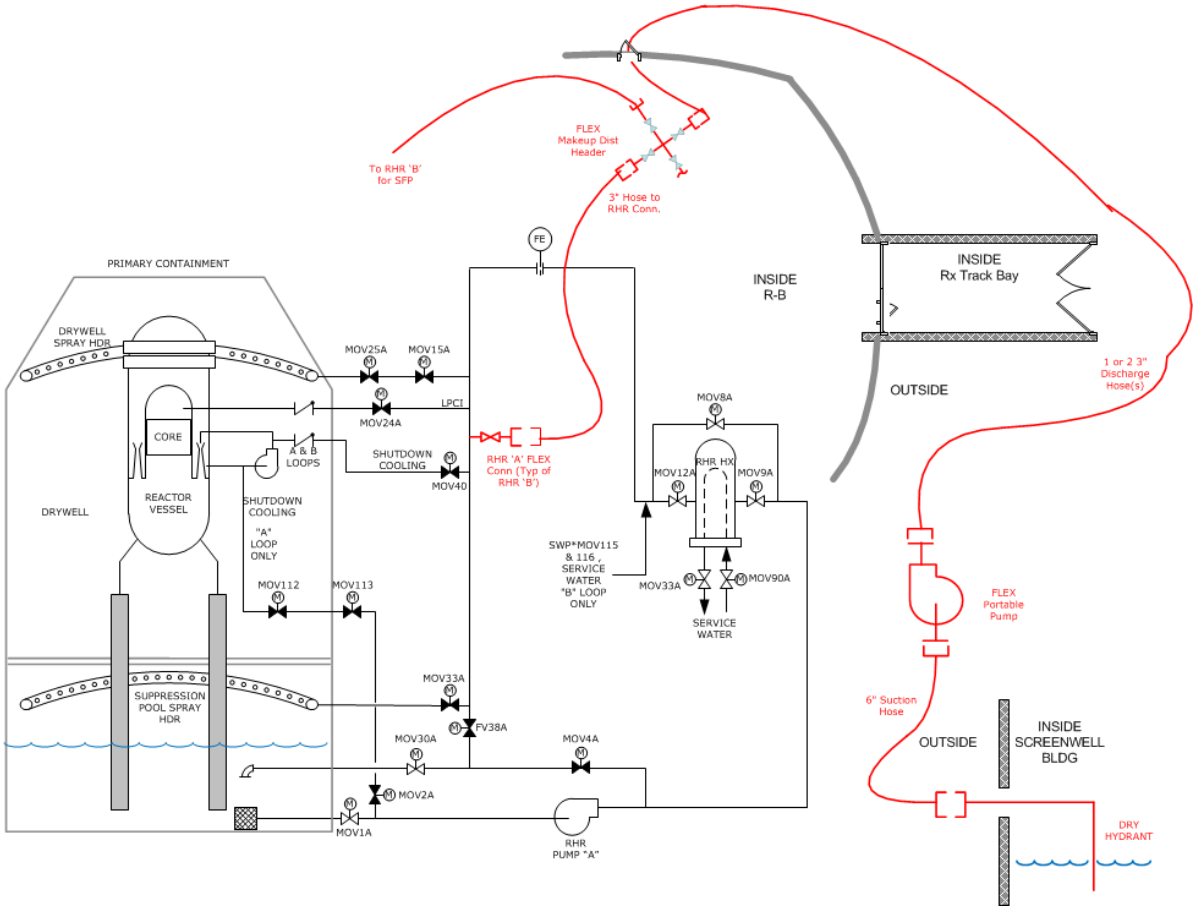

NMP2 Spent Fuel Cooling – Phase 1

- Phase 1 Spent Fuel Cooling at NMP2 is accomplished by utilizing the initial Spent Fuel Pool level and water inventory
  - Design basis heat lead analysis
    - 5.4 hours to heat up from 140°F to 212°F (normal SFP water temperature is closer to 100°F)
    - 32 hours to reach level 2 (10 feet above fuel)
    - 73 GPM makeup rate for decay heat boil off

NMP2 Spent Fuel Cooling – Phase 2

- Provide SFP makeup capability utilizing a diesel driven portable pump
- Modifications
  - Dry hydrants to be installed in the Service Water tempering line thereby creating a suction path from the intake structure
  - Connection and valve for connecting the portable pump hose to RHR (RB EL. 289')

NMP2 Alternative Makeup Capabilities

- Alternative to makeup to the RPV through the 'A' RHR system
  - Makeup to the RPV through the 'B' RHR system
- Alternative to makeup to the SFP through 'B' RHR system
  - Hoses up to the Reactor Building north stairwell to the Refuel Floor

NMP2 Electrical Power – Phase 1

- Safety Related batteries will provide sufficient power such that all critical parameters, RCIC and SRV operation will be available for at least 12 hours
  - This analysis is dependent upon load shedding occurring within the time frames required following an event
- Both Division I and Division II batteries are available and have been analyzed for 12 hour coping

NMP2 Electrical Power – Phase 2

- Portable diesel generator to be deployed to connect to the Division I 600 VAC switchgear via a Breaker Connection Device (BCD)
  - Division I is preferred due to the RCIC system DC power
- Alternatively, portable diesel generator to be deployed to connect to the Division II 600 VAC switchgear via a Breaker Connection Device (BCD)

NMP2 Electrical Power – Phase 2 (cont'd)

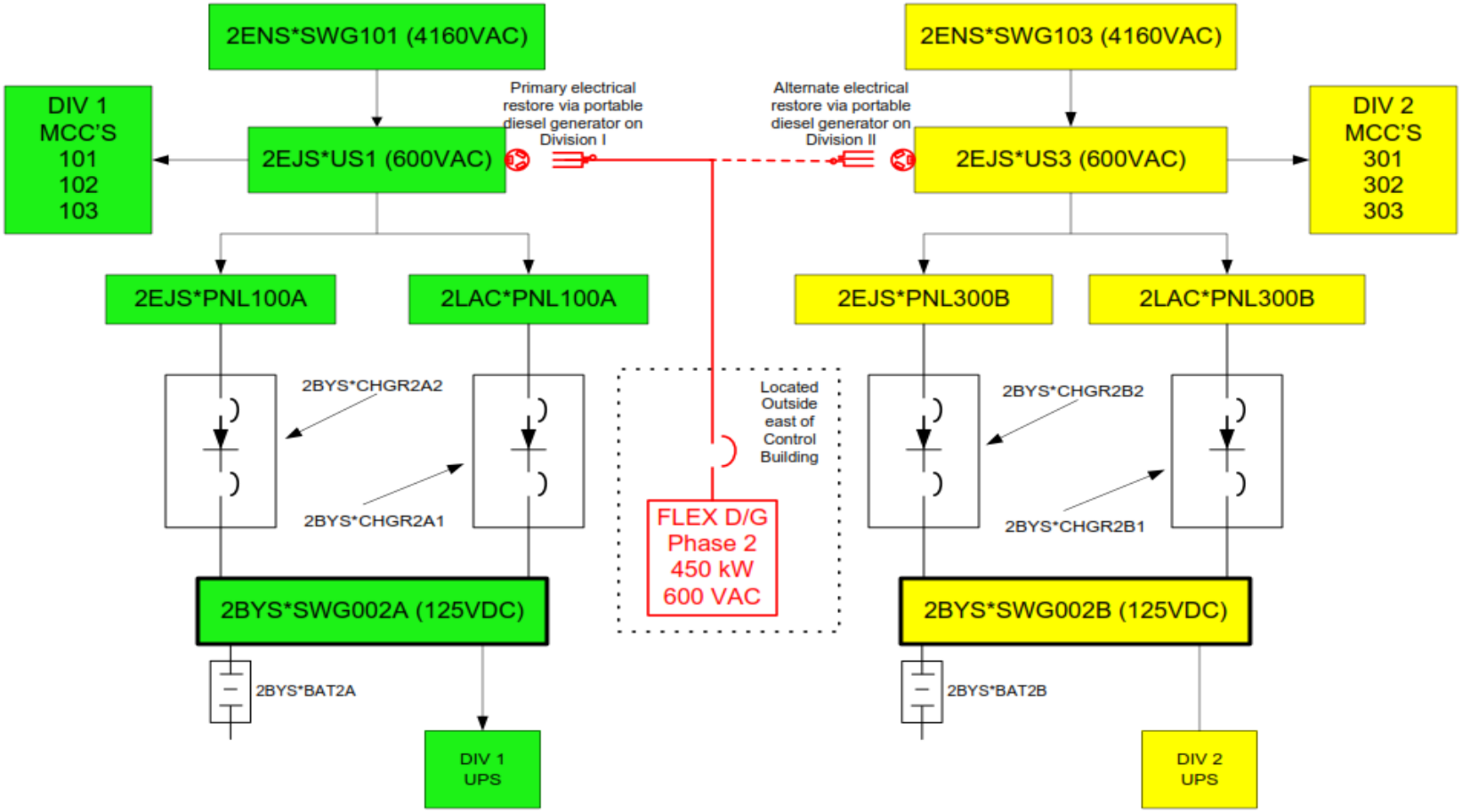

NMP2 Electrical Power – Phase 2 (cont'd)

- Primary Electrical Feed - Bus Connection Device (BCD) to 2EJS*US1 600 VAC Bus
- Alternate Electrical Feed - Bus Connection Device (BCD) to 2EJS*US3 600 VAC Bus
  - Deployable 4/0 cables stored in Control Building cable chases or Control Building corridors in metal enclosures and/or on reels
  - 450 kW FLEX DG deployed from FLEX Storage Building to the Control Building courtyard area east

NMP2 – Phase 3

- Mitigation Strategies identified and put in place in Phase 2 will provide for indefinite coping of key safety functions
- Preliminary analysis has been performed and supports that the strategies directly intended to satisfy key safety functions will restore or maintain those key safety functions for at least 72 hours
- Other equipment supplied from the National SAFER Response Center (NSRC) will utilize Phase 2 connections and act as spares to the existing Phase 2 equipment

Mitigating Strategies for all Modes

- Mitigation Strategies at both Units can be implemented in all Modes
- Special Considerations for Refueling Mode will be captured in refueling processes to ensure FLEX capability is maintained
- Deployment paths and equipment locations will be demarcated with signs and postings

National SAFER Response Center (NSRC)

- Staging areas A, B, and C defined
  - MOU's are in place
- NSRC Playbook development is ongoing
- Engineering is reviewing NSRC equipment to ensure it matches NMP FLEX scope or can be adapted for use quickly
- NSRC commitment is to have the first equipment onsite within 24 hours
  - NMP can cope indefinitely (72hrs and beyond) without the NSRC
- Key components arriving from the NSRC (as a backup to phase 2 equipment) includes
  - Medium size portable diesel driven pump (with booster system)
  - 1.1 mW Gas Turbine Generators (480 VAC with 600 VAC transformer)

FLEX Storage and Deployment

FLEX Deployment Routes

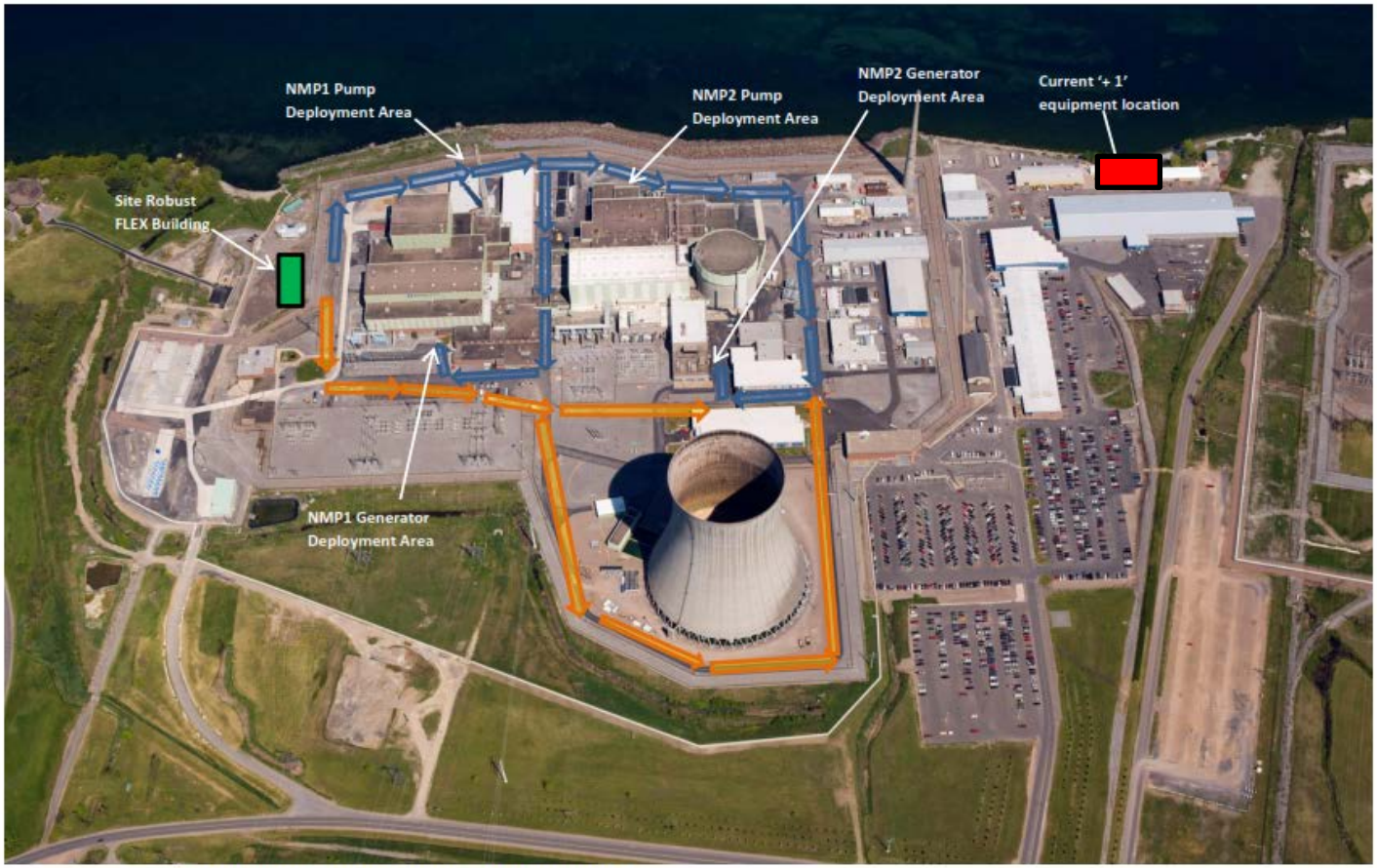

Blue arrows depict the primary deployment path

Orange arrows depict the alternate deployment paths

FLEX Storage and Deployment (cont'd)

- Fully protected FLEX Storage Building
- Initial operator response to the building to assess debris issues and deploy debris removal equipment if necessary
  - Three (3) hours reserved in staffing timeline for this resource dedication
  - All operators to be trained and qualified to operate the pay loader
- Deployment vehicles (trucks) will be staged already hooked up to deploy a NMP1 and NMP2 pump immediately
- Deployment vehicle (tractor) will be staged to deploy first diesel driven portable generator to NMP1
  - Return to the building to retrieve NMP2 portable generator

Debris Removal

- Primary and alternate deployment paths from the FLEX protected building to the final deployment locations
  - Primary is to the north to avoid overhead lines
- One large debris removal vehicle (pay loader) will be stored in the FLEX protected building
- At lease one vehicle will have a snow plow

Refueling Portable Equipment

- Both deployment trucks will be stored in the FLEX building
  - Each fitted with 500 gallon fuel tanks
  - Integral battery powered fuel transfer system (~ 20 gpm)
- Small gas powered fuel transfer pumps will be stored in the FLEX Building
  - Transfer out of storage to the 500 gallon tank (~ 30 gpm, as tested)
- Adequate to fuel all diesel-run FLEX equipment
- Simple calculations using maximum loads of FLEX portable diesels indicate substantial margin in refuel timing/capability
- On site Safety Related storage tanks contain over 140,000 gallons of diesel fuel
  - Enough for over 20 days of operation without outside support
  - Indefinite replenishment may be solicited and arranged during the time the on-site fuel is available

Reliable Spent Fuel Pool Level Instrumentation

Reliable Spent Fuel Pool Level Indication

- Provide reliable indication of water level in the Spent Fuel Pool (SFP) from normal water level to the top of the fuel racks
  - Level 1 supports normal cooling system operation
  - Level 2 provides substantial shielding to personnel requiring access to the SFP operating deck (10 feet above irradiated fuel)
  - Level 3 ensures fuel remains covered with water

SFPLI System Overview

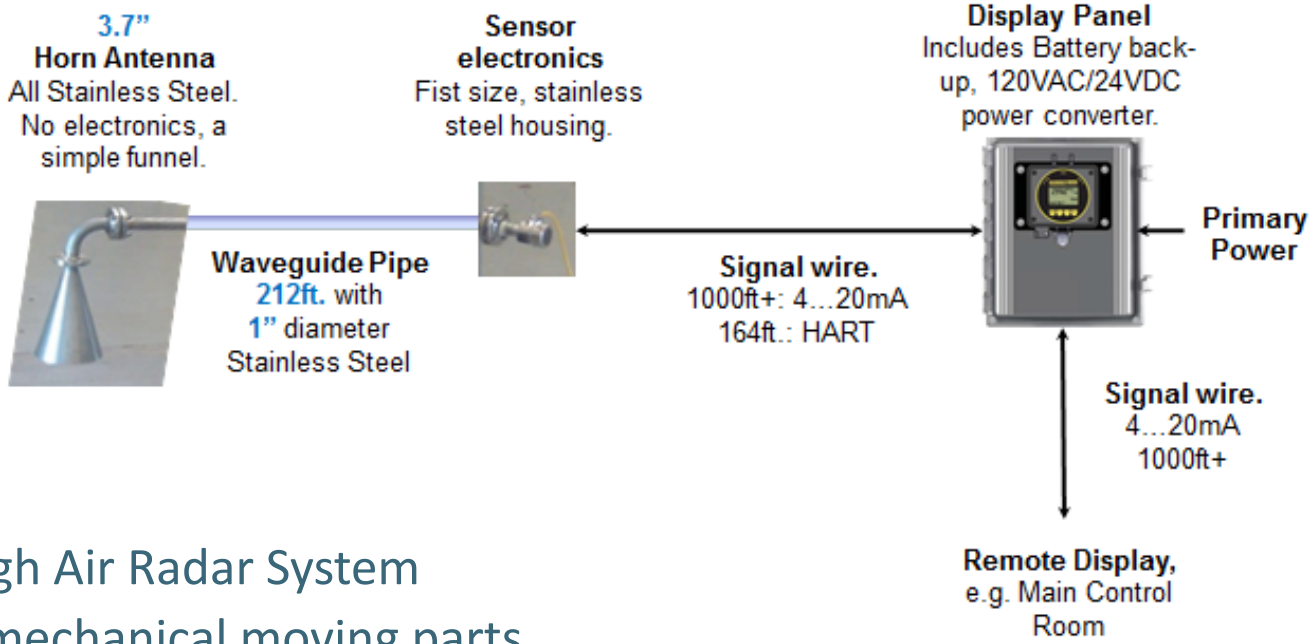

- Through Air Radar System
  - No mechanical moving parts
  - Sensor is located outside the process fluid to be measured
  - Immune to most vapors and physical characteristics of the measured media
  - Very low power consumption – 0.5 watts/channel

SFPLI Description

- Two permanently installed instruments per pool
- Indications will trigger certain FLEX strategies to provide SFP makeup based upon SFP level
- The accuracy required by the order is one foot
  - The specification for the instrument is +/- 3” in steam environment
- Normal AC power with battery backup
  - FLEX generator to provide long term backup power at each unit
- Temperature limitations associated with sensor qualification (176°F)
  - Requires RB cooling to be established early in an event (within 8 hours)

SFPLI System Description (cont'd)

- SFPLI Power Availability
  - Each instrument loop normally powered from independent power supplies
  - FLEX generator will provide power to the SFP level loops during ELAP conditions
  - Equipped with internal batteries that can power the SFP level loops until FLEX generator power is provided

Spent Fuel Pool Plan View – NMP1 and NMP2 are similar

Backup Level Horn and Wave Guide

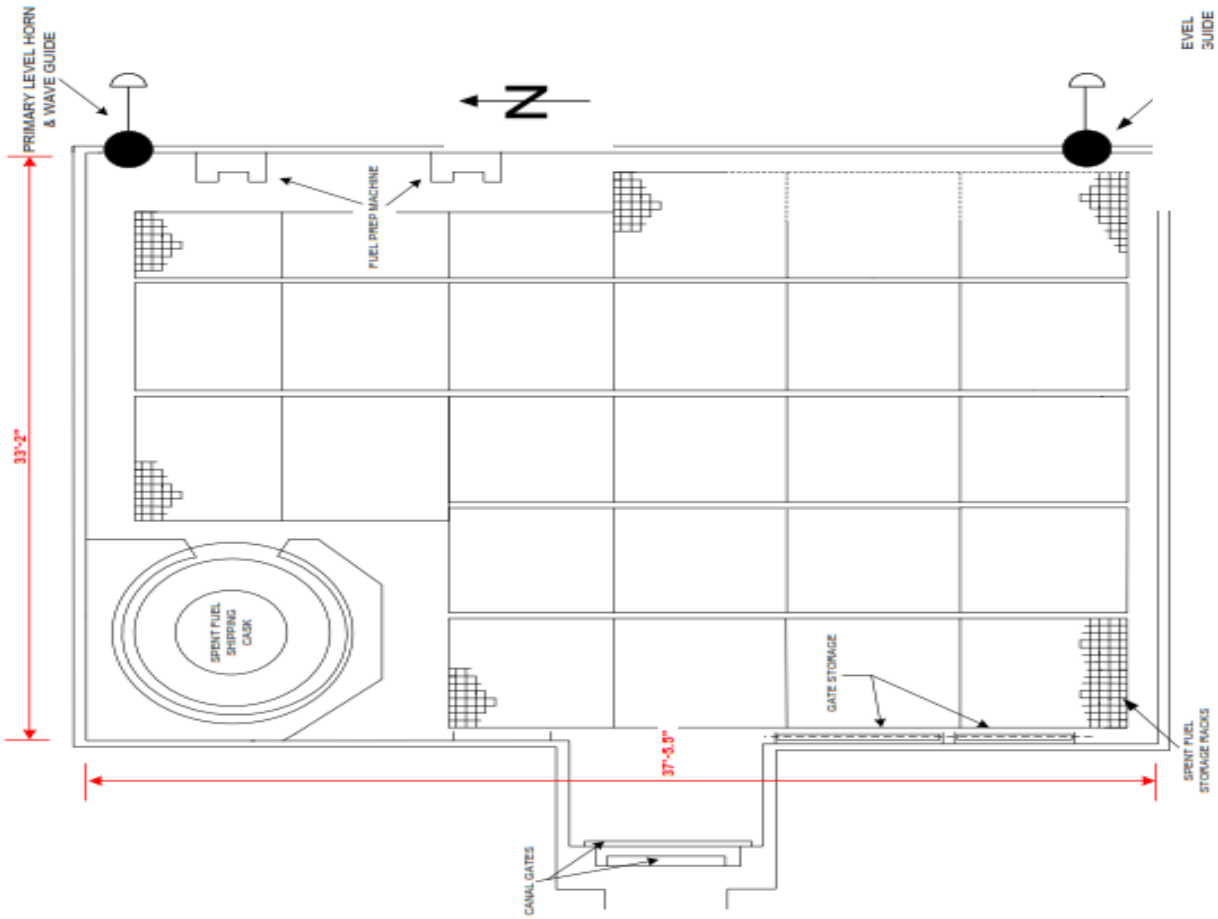

Primary Level Horn and Wave Guide

NRC Audit Summary of FLEX/SFPLI

Open Item Closure Summary

NMP1

Original # Open Items	Added # Open Items	Closed Original	Closed New	Remaining Open
55	3	50	2	6

SFPLI

Original # Open Items	Added # Open Items	Closed Original	Closed New	Remaining Open
18	0	18	0	0

NMP2

Original # Open Items	Added # Open Items	Closed Original	Closed New	Remaining Open
56	3	36	2	21

National SAFER Response Centers, and the U.S. Nuclear Industry

20 November 2014

National SAFER Response Center (NSRC) Locations

1000 mile radius / 20 hours by truck

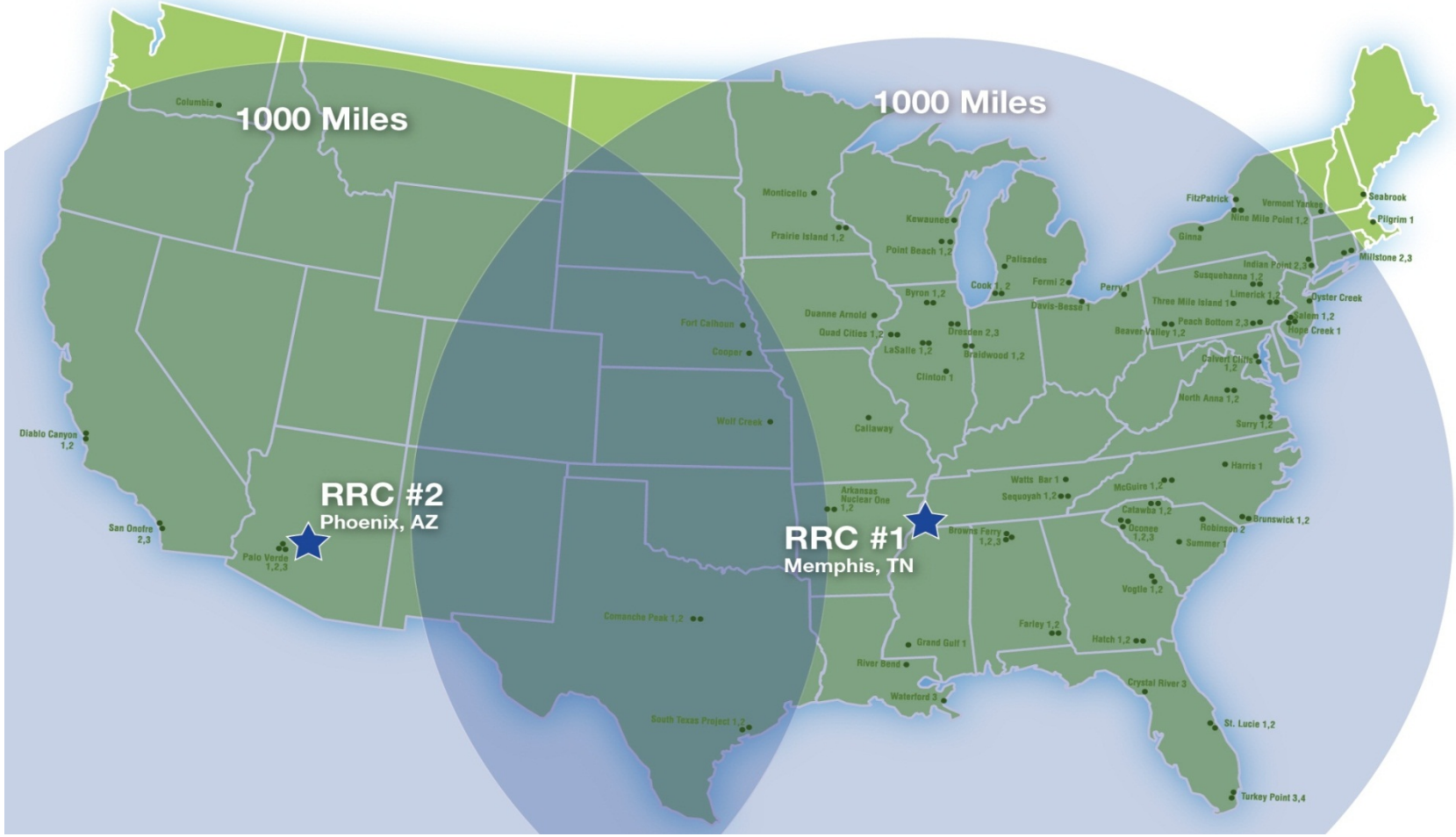

Timeline for Emergency Response

- 24 Hour NSRC Equipment (identified by plant)
  - T-0 – Notification
  - T-2 – Mobilization
  - T-4 – Begin transportation to off-site staging area
  - T-20 – Equipment preparation at off-site staging area
  - T-22 – Transportation to on-site staging area
  - T-24 – First equipment on-site
  - T-24 – Remaining NSRC equipment to be delivered to off-site staging area

NSRC delivery to sites

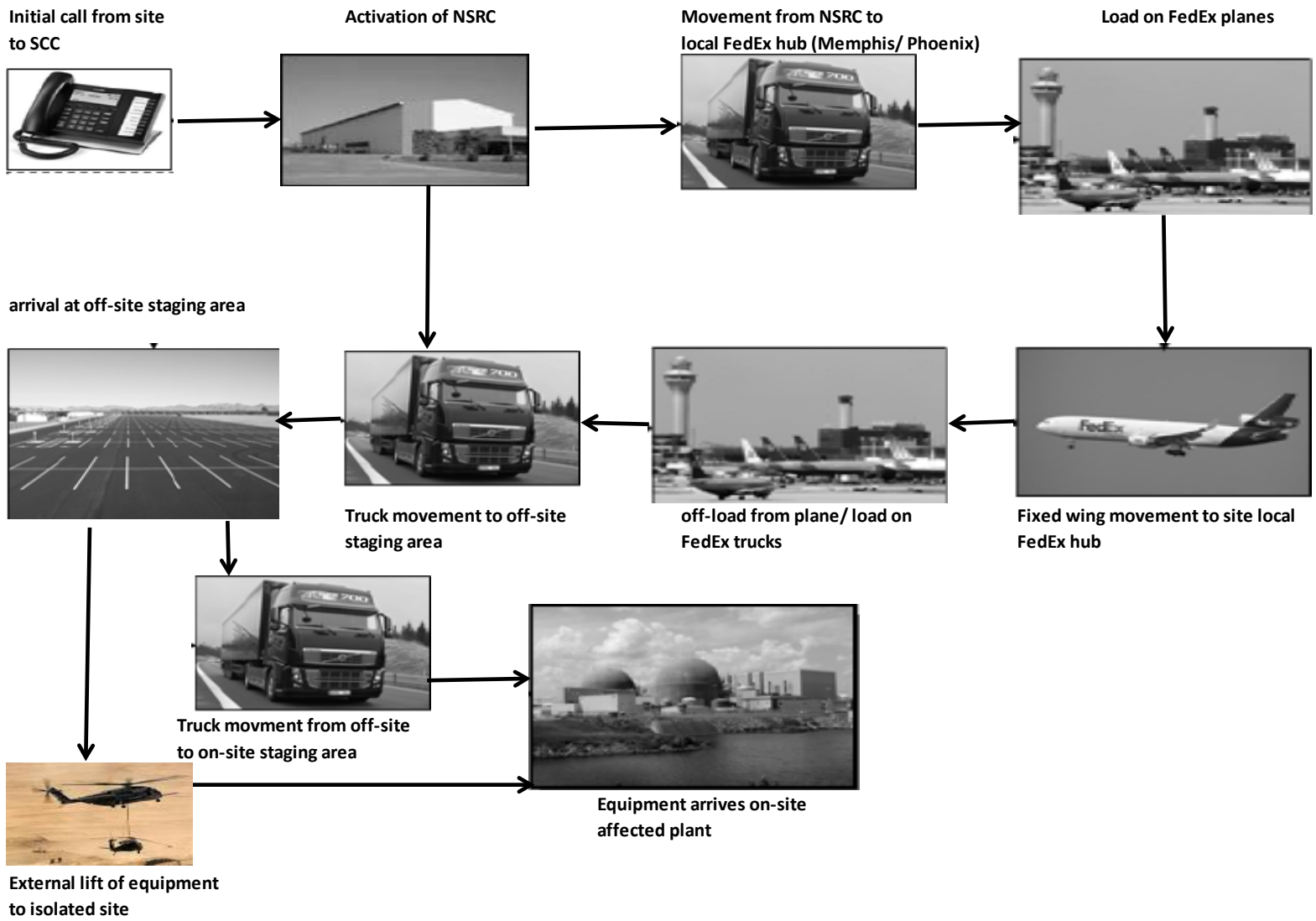

SAFER Organization and Facilities

- SAFER Control Center (SCC)
  - Command and control of overall response
  - Similar to existing Outage Control Center
  - Primary – Lynchburg, VA
  - Alternate – Birmingham, AL
- National SAFER Response Center (NSRC)
  - Equipment warehouse
    - Storage and maintenance of 5 sets of generic equipment and site specific equipment
  - Pre-loaded on commercial trailers
  - Pre- palletized for fixed wing movement
  - Testing and certification

SCC and NSRC Organization

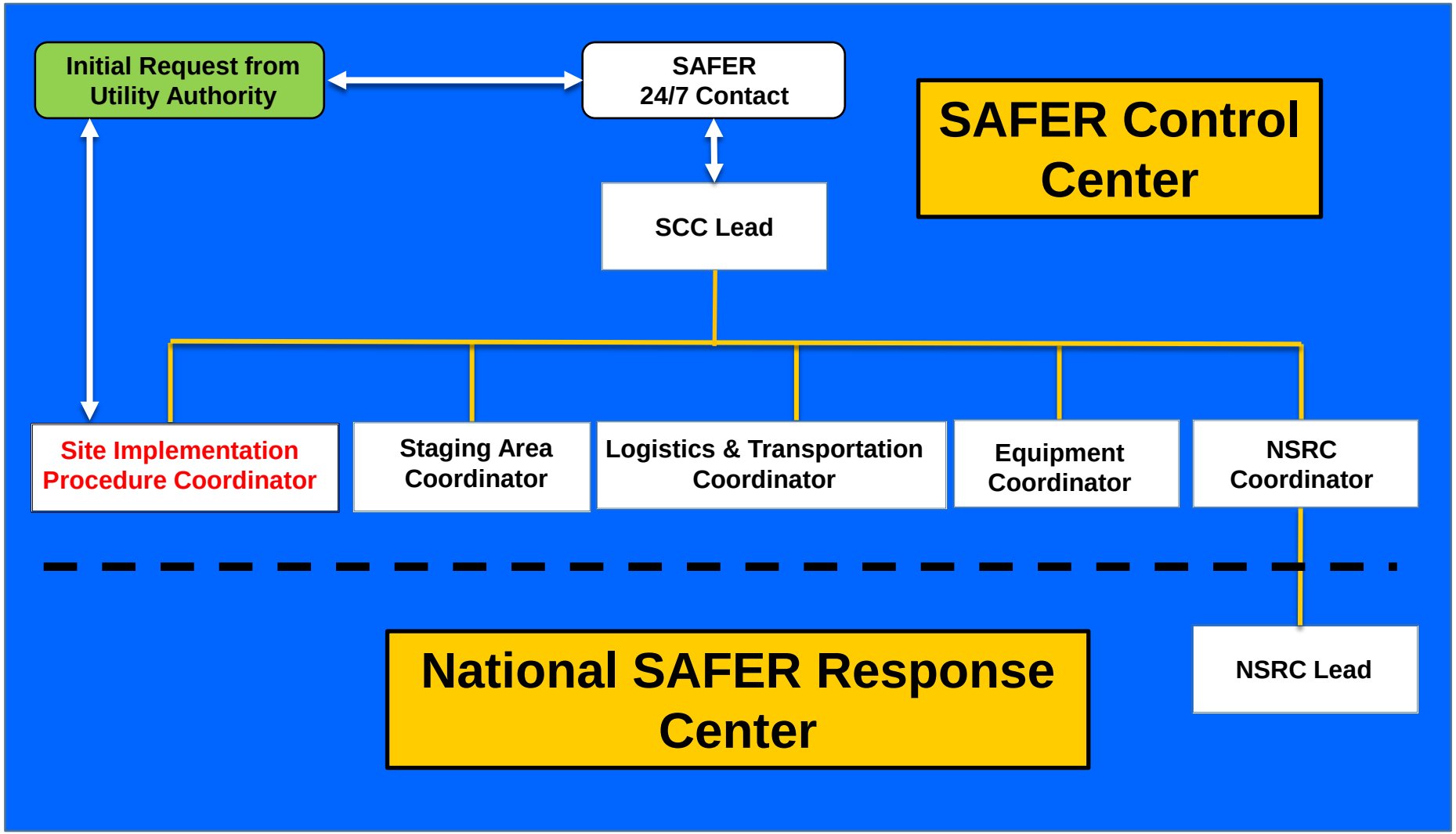

Staging Area Organization

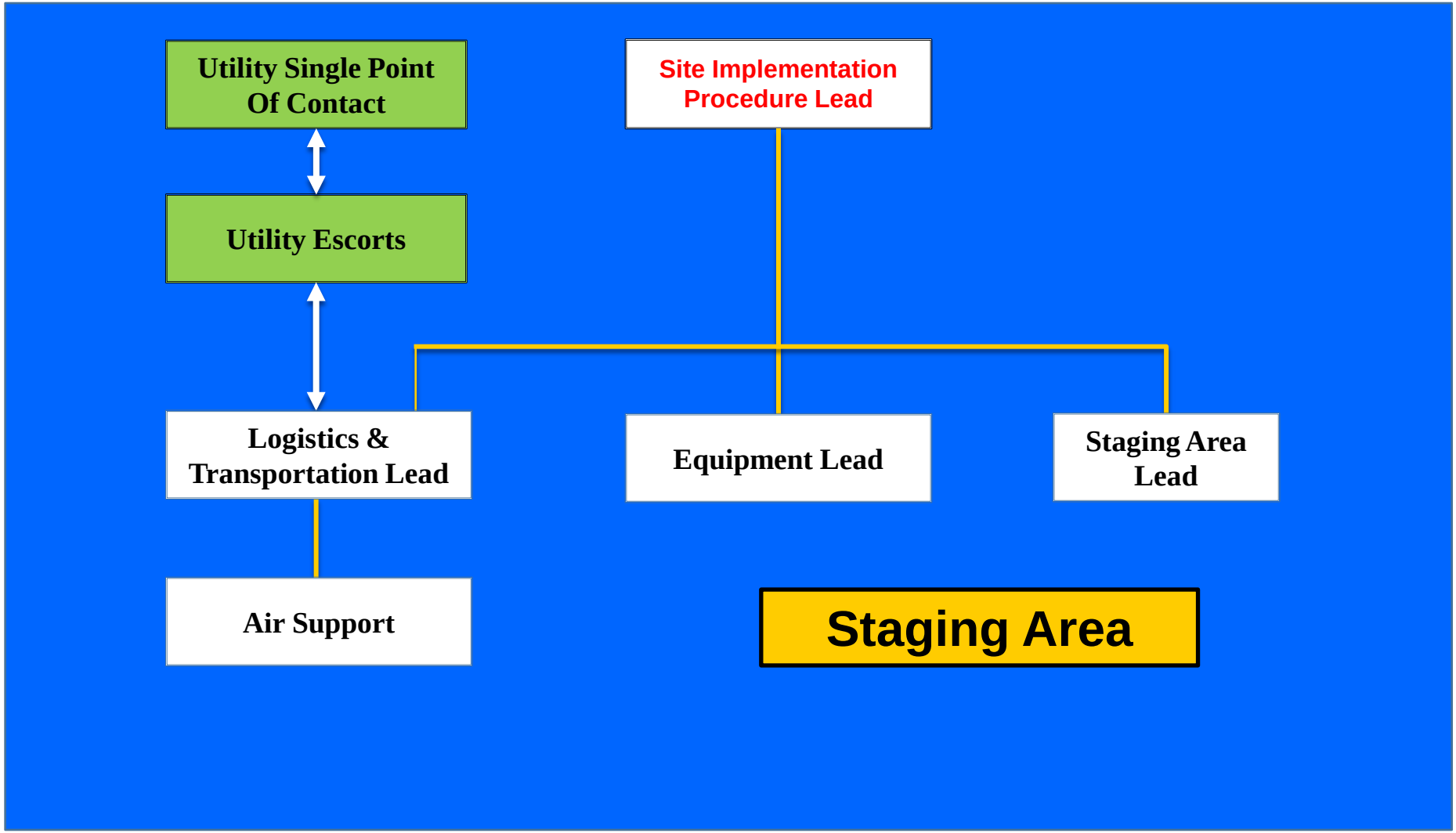

SAFER Response Plan Chapters

1. Introduction
2. SAFER Control Center
3. Regional Response Center
4. Logistics & Transportation
5. Staging Area
6. Site Interface Procedure
7. Equipment Listing
8. Requirements and Basis

Each site has a specific Response Plan used by all organizations to respond

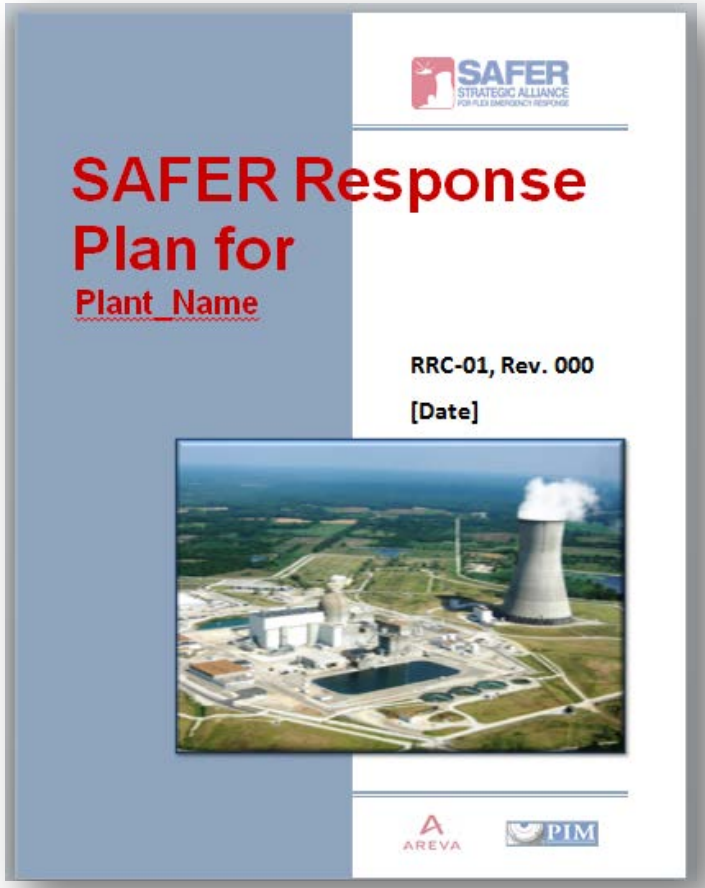

NSRC Equipment

- Each NSRC will have five sets of generic equipment
- Four sets are always available for response
- One set rotated through periodic maintenance
- Additional site specific (non-generic) equipment – as identified by utilities
- Maintained by the NSRC staff / SA operators/ contractors
- Equipment has an ~8,500 pound weight for transport by helicopter
  - Helicopters have at least a 70 mile round trip limit
- Equipment pre-loaded on trailers/ palletized for fixed wing movement
- All equipment will run on diesel fuel
- Industry standard electrical and mechanical connections

NSRC Equipment

	Generic Equipment	Site Specific Equipment
Requires Specification	• 4kV turbine generators • 480VAC turbine generators • High Pressure Pump (60 GPM) • Low Press/Med Flow Pump (2500 GPM) • Low Pressure/High Flow (5000 GPM) • SG/RPV Makeup Pump (500 GPM)	• Transformers*** • 480VAC to 600VAC • Mobile Boration Unit • RO Unit/Water Purification • 4kV turbine generators

Commercially Available	• Diesel Fuel Transfer
	• Standard Hoses and Connections (Suction, Discharge, Strainers)
	• Generator Connection Cables
	• Portable Lighting
	• SAFER Team Equipment
	  • Communication
	  • Habitability
		• Portable Air Compressors
		• Water Storage

Transportation

Contract with FedEx Custom Critical for ground and fixed wing movement

Tiered approach to Helicopter availability

- 1st Level – Contract with multiple commercial helicopter companies for first call out
- 2nd Level – State National Guard via state emergency management organizations
- 3rd Level – Coordinate Federal support through FEMA

NSRC delivery to isolated sites

- Use of helicopters
  - Call out for support
    - Commercial as available
    - State Air National Guard
    - DOD through NRC/ FEMA

    called out simultaneously
  - Pre-filed Congested Area Flight Plans for each site, off-site staging area to on-site staging area
    - Use flight plans for commercial, Air National Guard, DOD external lifts
  - Purchased external lift slings for all equipment
  - Annual review of all flight plans
  - Annual inspection of all slings

NSRC checklist for each site

National SAFER Response Centers (NSRC)
Checklist to Declare Operational

Byron

Print the name of the Nuclear Site to which this checklist is applicable.

NOTE: The NSRC will be declared READY through the completion of the NRC audit process. Following the completion of the audit and the completion of this checklist, the NSRC is declared OPERATIONAL for a particular nuclear plant site.

INITIAL/DATE		Criteria
DLM 9/29/14	1.	Equipment design parameters documented and bound plants coping strategies.
	2.	Generic Equipment
GDL 10/15/14		a. Delivered and receipt inspected satisfactory.
GDL 10/15/14		b. Entered into maintenance, testing, and calibration program.
	3.	Non-generic Equipment
GDL 10/15/14		a. Delivered and receipt inspected satisfactory.
GDL 10/15/14		b. Entered into maintenance, testing, and calibration program.
MAC 10/13/14	4.	Deployment team support equipment and material available.
MAC 10/13/14	5.	Contract with transport providers for delivery.
MAC 10/13/14	6.	Congested Area Flight Plans have been completed.
DLM 9/30/14	7.	Training program in place and training complete for SAFER response personnel.
DLM 10/13/14	8.	SAFER Response Plans has been completed for the site stated above and, approved by that utility.

Checklist completed by: DEANNA McCOMBS DLMcCombs 10/15/14

Verified by: [signature]

Date: 10/15/2014

This checklist is completed by SAFER, verified by a SAFER Manager and maintained in PEICo document control.

Additional material

NSRC future assessments

- Current framework for assessment of NSRC includes NUPIC audits to ensure the critical elements of NEI 12-06 for off-site support are met
- NRC Vendor Inspection Branch has existing audit/ inspection relationship that can be used to assess effectiveness of NSRC capabilities
- INPO will maintain its current role in evaluating program effectiveness as it relates to emergency response capabilities
- Existing assessment framework is sufficient to ensure required capabilities for NSRCs are maintained

NSRC Movement Plan

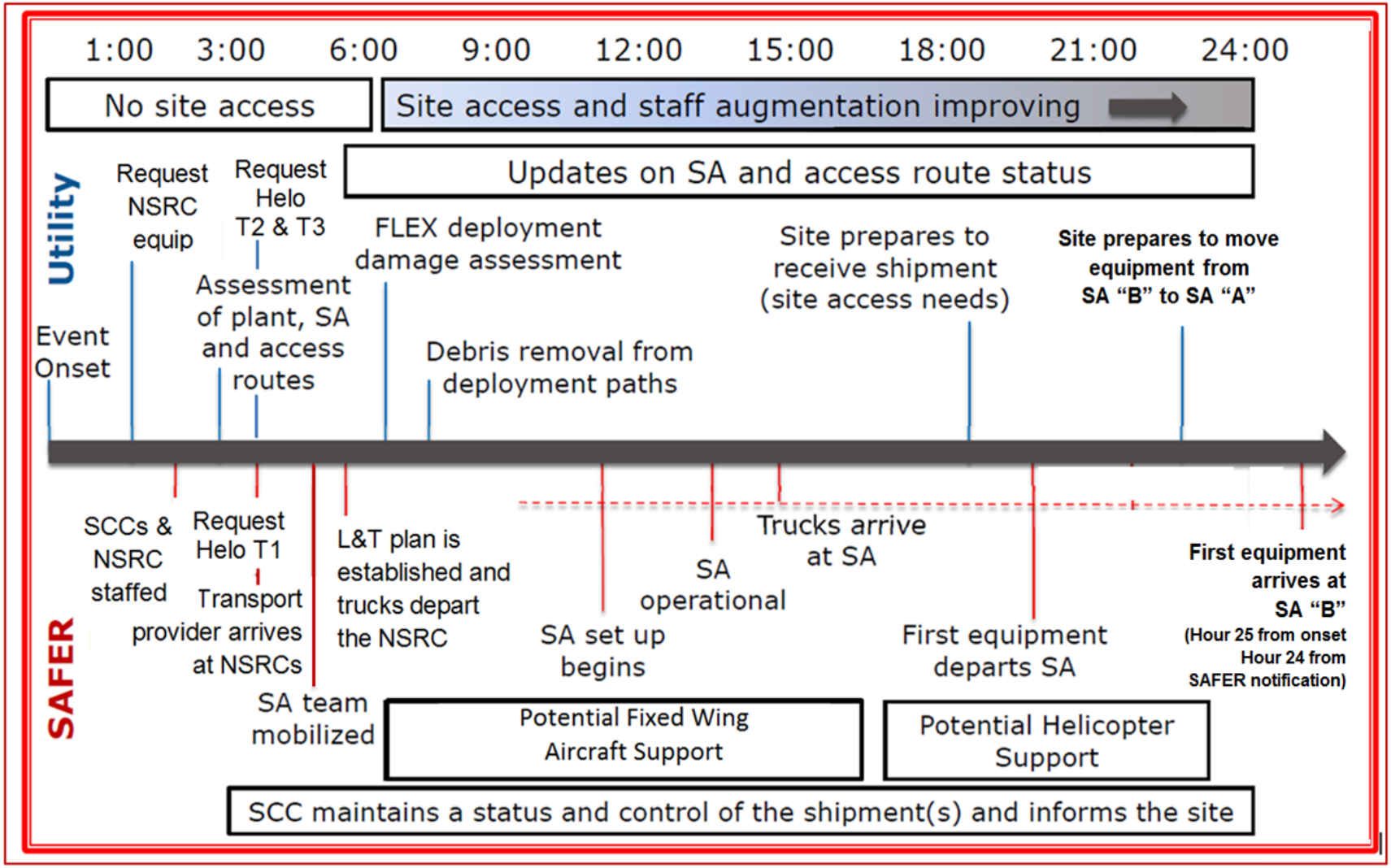

NSRC delivery to isolated sites

Reviewed and Approved:
FSDO #:_____
Inspector: _____
Date:_____

Congested Area Lift Plan
(FAR Part 133)

Lift Site:	Byron Nuclear Power Plant				
Address:	4450 N German Church Rd				
City:	Byron	State:	IL	Zip:	61010
Contact:	SAFER			Phone:	
Date of Lift:	To be Determined	Time:	To be Determined	Pilot(s):	
Aircraft Type:	Sikorsky S-61NM	N#:	N618CK	Airworthiness Category:	Standard

Description of Load

Estimate number of lifts: 78
Maximum Weight: 8,000 lbs
Type of Load: Equipment
Estimated Length of attachment means: 100 feet
☐ Aerodynamic
☑ Non- Aerodynamic

NSRC Demonstrations

- Demonstrations were held for both over the road movement of equipment (TMI) and air movement of equipment (Surry).
- Focus of the demonstration was on the interactions between the Site/ SAFER Control Center (SCC)/ National SAFER Response Center (NSRC).
- No ‘show stoppers’ were identified by the NRC.
- Following the demonstrations, members of the NRC and SAFER teams visited the FedEx Customs Critical facility in Akron Ohio. The NRC was impressed with the ability of the FedEx facility to identify, track, re-route and communicate with their over-the-road trucks as well as identify fixed wing aircraft, develop and file flight plans, coordinate with airport FedEx facilities and deal with restricted flight zones.
- 12 specific comments were provided at the exit meeting by the NRC:
  1) SAFER should clearly distinguish responsibilities (SAFER vs. licensees) at the licensee site (Staging Area “B”) in the SAFER Response Plans (SRPs) and communicate these to the licensees.

  Complete

NSRC Demonstrations

2) Training plans and documentation for SAFER staff should be provided. Demonstrations were performed by personnel with good knowledge of the procedures. Have not provided enough information to demonstrate ownership, expertise, and training related to SAFER operation of equipment.
   - SAFER is currently performing and documenting training.
   - Owner: Deanna McCombs Date:
3) Additional information should be provided regarding the SAFER plan to obtain reliable, available helicopter resources, if needed, to deliver the equipment to the site within the allotted time.

Complete

4) The SAFER Response Plans are still drafts with noted open items and errors. What will be the verification and validation process/ process for getting to final SRPs with high quality?

Complete

NSRC Demonstrations

5) There was a clear lack of understanding by all participants of how to get the SAFER and FedEx personnel onto the site.

   Complete

6) There did not appear to be a method to ensure equipment proper operation/ monitoring of trends and abnormalities after delivery (i.e. logs).

   Complete

7) Communication between SCC and SPOC should be streamlined/ too much communication between SCC and site SPOC in early stages of the event. SCC seems to be collecting a lot of site condition information unnecessarily during early stages. Adds to the potential for SPOC to be overloaded with communication requirements.

   Complete

NSRC Demonstrations

8) The process for FedEx truck arrival, preparation, and departure to/from the Response Centers should be more clearly defined.

Complete

9) Response Center equipment lists are maintained on pre-printed bills of lading. How will configuration control be maintained for these as site plans evolve?

Complete

10) Methods for obtaining and recording necessary information at the SCC should be standardized.

Complete

NSRC Demonstrations

11) Additional information should be documented for supplemental/ support equipment.

Complete

12) Truck height and weight restrictions and necessary permits should be specified for alternate routes, and communicated to state officials (state police).

Complete

U.S.NRC

United States Nuclear Regulatory Commission

Protecting People and the Environment

Mitigating Strategies Order EA-12-049

Japan Lessons-Learned Division

November 20, 2014

U.S.NRC
United States Nuclear Regulatory Commission
Protecting People and the Environment

Integrated Timeline

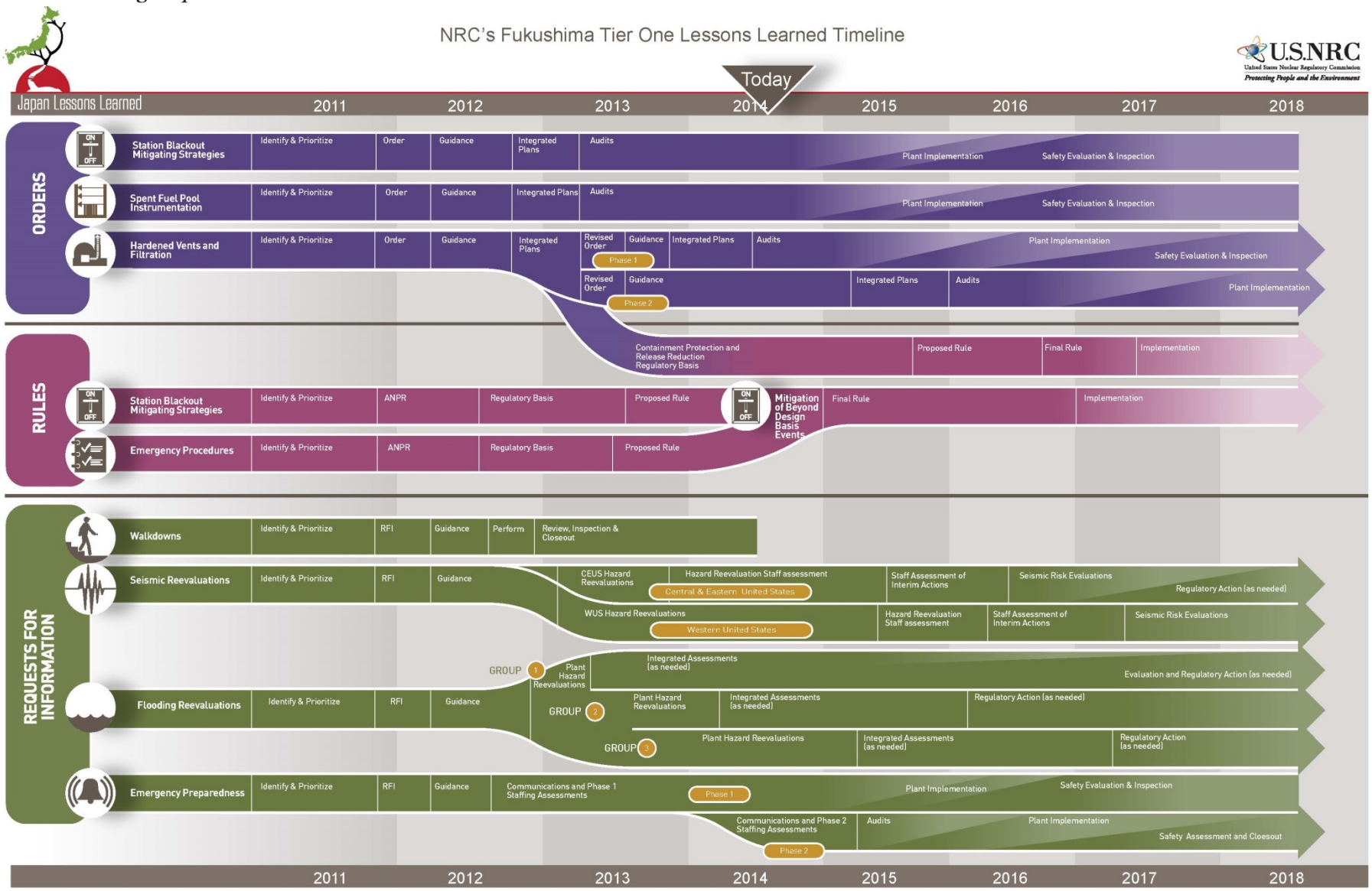

Mitigation Strategies
For External Events

- Requires a three-phase approach for maintaining or restoring core cooling, containment, and spent fuel cooling
- Issued March 12, 2012

Phase	Licensee may use
Initial	Installed equipment
Transition	Portable, onsite equipment
Final	Resources obtained from offsite

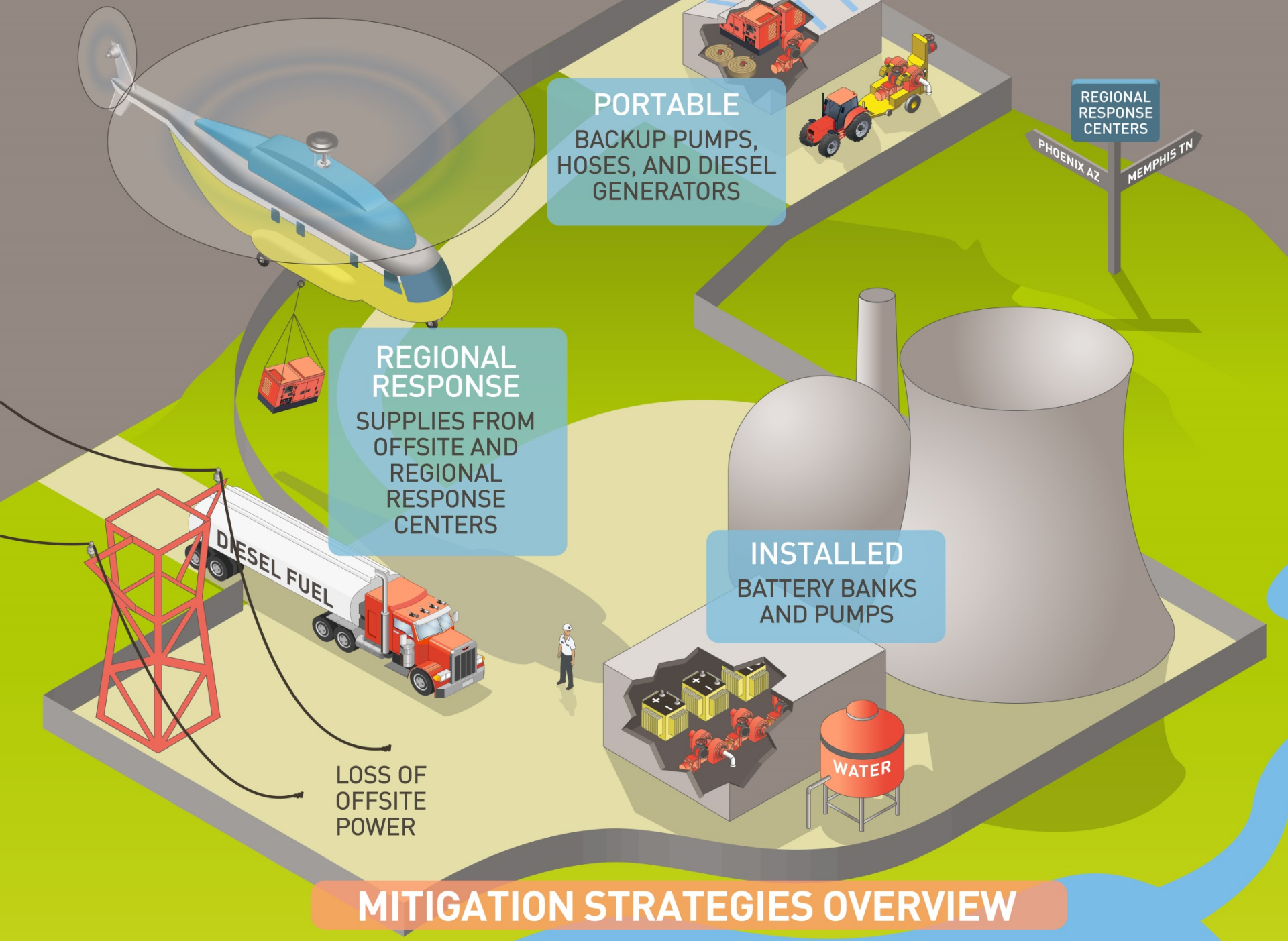
PORTABLE
BACKUP PUMPS, HOSES, AND DIESEL GENERATORS
REGIONAL RESPONSE CENTERS
PHOENIX AZ
MEMPHIS TN
REGIONAL RESPONSE
SUPPLIES FROM OFFSITE AND REGIONAL RESPONSE CENTERS
DIESEL FUEL
INSTALLED
BATTERY BANKS AND PUMPS
WATER
LOSS OF OFFSITE POWER
MITIGATION STRATEGIES OVERVIEW

U.S.NRC
United States Nuclear Regulatory Commission
Protecting People and the Environment

Order Milestones

✓ Overall Integrated Plan submitted

- Order Compliance: no later than 2 refueling cycles after submittal of the overall integrated plan or December 31, 2016, whichever comes first
  - Some licensees have requested and received schedule relaxation

U.S.NRC
United States Nuclear Regulatory Commission
Protecting People and the Environment

Regulatory Guidance

- NEI 12-06, “Diverse and Flexible Coping Strategies (FLEX) Implementation Guide”
  - Extended loss of ac power and
  - Loss of normal access to the heat sink
- Endorsed by the NRC in August 2012

MS – Order Closeout

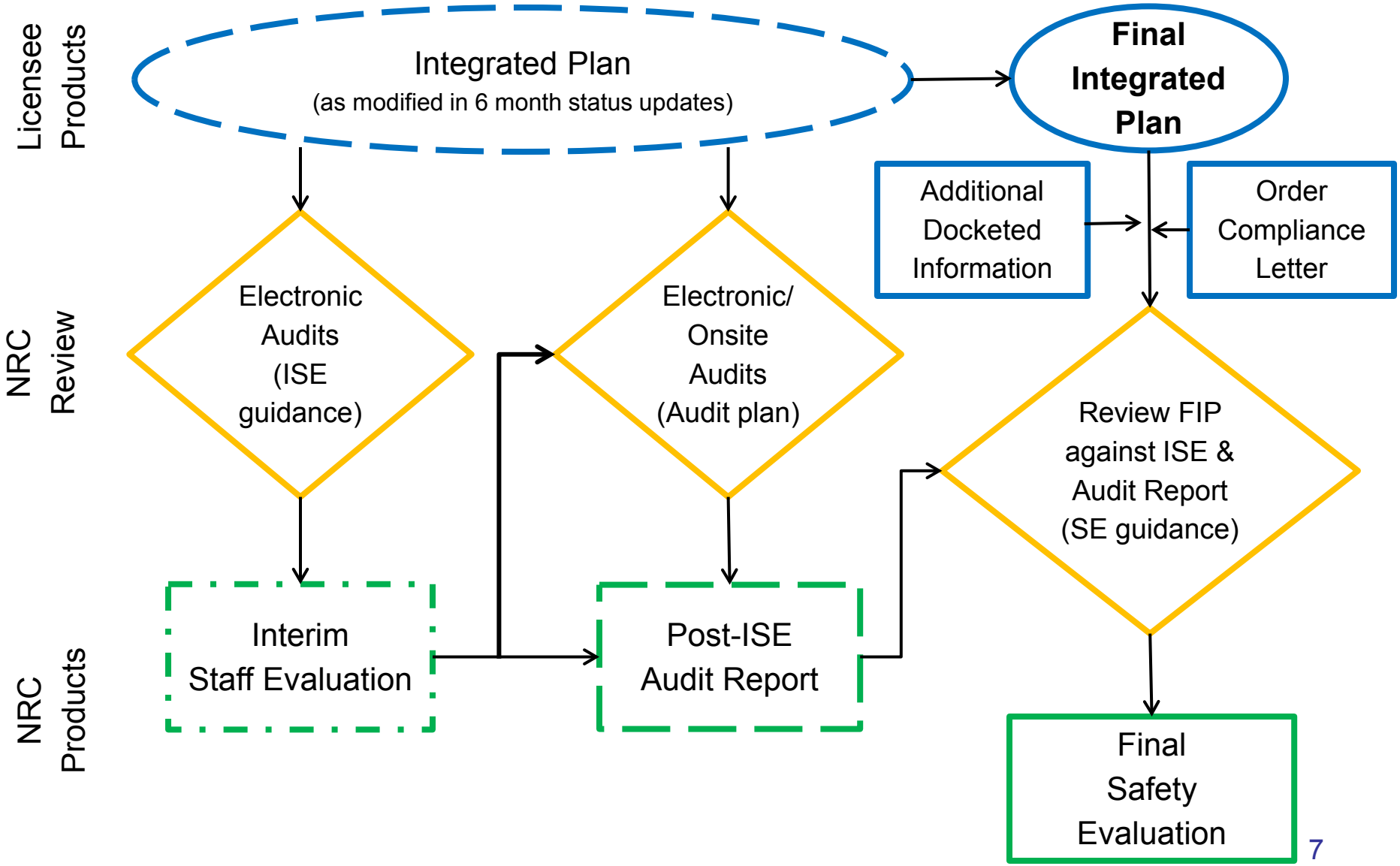

U.S.NRC
United States Nuclear Regulatory Commission
Protecting People and the Environment

Interim Staff Evaluation

- Purpose:
  - Preliminary evaluation of plans
  - Provide regulatory certainty (if implemented as described)
- Issue Categorization
  - Open
  - Confirmatory
  - Acceptable/Complete
- Issued November 2013 - February 2014

U.S.NRC
United States Nuclear Regulatory Commission
Protecting People and the Environment

Audits

- Efficient Review
  - Schedule/resource constraints
  - Unique aspects of plans
- Electronic Reading Room
- Audit Phone Calls
- Site Visits
  - 17 visits accomplished to date
  - Majority to be complete by Summer 2015

U.S.NRC
United States Nuclear Regulatory Commission
Protecting People and the Environment

Safety Evaluation

- Document staff evaluation of plans to meet requirements of the order
- Completed approximately 4-6 months after site compliance and the licensee's submittal of the Final Integrated Plan
- Reference document for post compliance inspections

U.S.NRC
United States Nuclear Regulatory Commission
Protecting People and the Environment

Post-Compliance Inspections

- Verify compliance with the orders
- TI-2515/191 covers:
  - Mitigation Strategies
  - Spent Fuel Pool Instrumentation
  - Emergency Preparedness Staffing and Communication
- To be performed within 1 year of the Safety Evaluation being issued

U.S.NRC
United States Nuclear Regulatory Commission
Protecting People and the Environment

Schedule

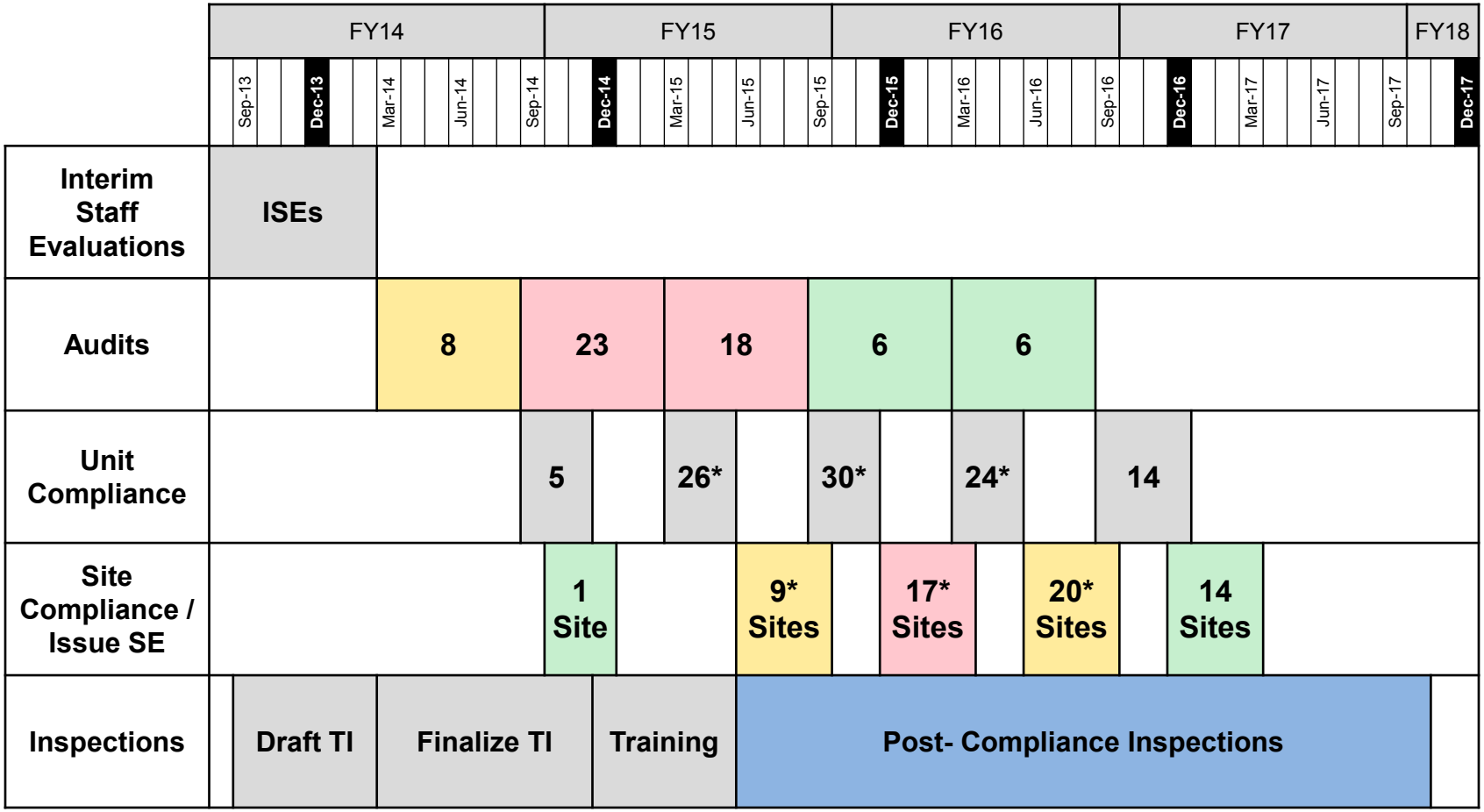

* Ten BWR units have requested relaxation to a third outage (past 2016) to align with EA-13-109

U.S.NRC
United States Nuclear Regulatory Commission
Protecting People and the Environment

Select Topics

- Response Centers
- Alternate Approaches
- Reactor Coolant Pump Seals
- Equipment Survivability and Functionality
- Instrumentation Qualification
- Operator Action Feasibility

Response Centers

- For Phase 3 of the order, licensees will receive portable equipment from an offsite facility
- Two redundant response centers :
  - Phoenix, AZ, and Memphis, TN
  - Two redundant Command and Control Centers

Response Centers

- Operated by Strategic Alliance for FLEX Emergency Response (SAFER), an alliance between AREVA and PEICo.
  - Fixed-wing and ground transportation
  - Rotary wing

Credit: NEI

U.S.NRC
United States Nuclear Regulatory Commission
Protecting People and the Environment

Response Centers

- Effective SAFER operations are dependent on integrated planning and coordinated response actions among the nuclear station, governmental authorities, industry, and vendor support personnel.
- Response centers became operational this summer (May 22, 2014 and June 27, 2014)
- The NRC observed proof of concept demonstrations for both centers
  - Some areas for improvement were noted and subsequently addressed
- National SAFER Response Centers Staff Assessments issued September 26, 2014

U.S.NRC
United States Nuclear Regulatory Commission
Protecting People and the Environment

Alternate Approaches

- Some licensees proposed approaches not described in NEI 12-06
- Reviewed on site-specific basis by comparison to the order
- Examples:
  - Storage locations for FLEX Equipment
  - Credit for equipment beyond the configuration of NEI 12-06

Reactor Coolant Pump Seal Leakage – Overview

- ELAP event would interrupt cooling to coolant pump seals, potentially increasing seal leakage rate
- Depressurization and cooldown of reactor is typically recommended to prevent or limit damage to pump seal elastomers (e.g., o-rings)
  - For PWRs, seal leakage is typically the dominant coolant loss mechanism during analyzed ELAP, thereby driving the required timeline for establishing makeup to RCS
  - At most BWRs, seal leakage is less significant because makeup capacity from installed steam-driven systems (i.e., HPCI / RCIC) exceeds expected leakage rate

Westinghouse Standard Seal

- Initial 21gpm assumption based on WCAP-10541: "Westinghouse Owners Group Report, Reactor Coolant Pump Seal Performance Following a Loss of All AC Power"
- Recent industry calculations associated with NSAL 14-1/PA-1196 predict integrated seal leakage over ELAP duration exceeding original calculations
- PWROG & Westinghouse need to confirm revised leak rate curve with benchmarking of EDF data
- Individual licensees without flow restrictive orifice in leakoff line (and higher leak rates) may need modifications to reduce leak rate
  - Also need to address pressurization of leakoff line as a result of flow restriction

U.S.NRC
United States Nuclear Regulatory Commission
Protecting People and the Environment

Equipment Functionality Post-Event

- The intent of the order is to prevent fuel damage
- Equipment is required to be “robust”
- Phase 1 installed equipment is designed to survive the external event
- Order requires reasonable protection of equipment
- Impact of Reevaluated Hazards

U.S.NRC
United States Nuclear Regulatory Commission
Protecting People and the Environment

Instrumentation Qualification—MS

- The Mitigation Strategies Order does not have specific qualification requirements
- Guidance in NEI 12-06:
  - Licensees need a strategy to define a minimum set of parameters necessary to implement the strategy
  - Equipment relied upon to support FLEX implementation does not need to be qualified to all extreme environments that may be posed, but some basis should be provided for the capability of the equipment to continue to function
  - Licensees must:
    - Have the appropriate instrumentation available
    - Have a backup available
    - Have a plan in case neither is available

U.S.NRC
United States Nuclear Regulatory Commission
Protecting People and the Environment

Instrumentation Qualification—SFPI

- The Spent Fuel Pool Instrumentation Order has specific qualification requirements

> The primary and backup instrument channels shall be reliable at temperature, humidity, and radiation levels consistent with the spent fuel pool water at saturation conditions for an extended period. This reliability shall be established through use of an augmented quality assurance process (e.g., a process similar to that applied to the site fire protection program).

- Guidance NEI 12-02, directs the licensees to consider the following beyond-design-basis events:
  - radiological conditions for a normal refueling quantity of freshly discharged (100 hours) fuel with the SFP water level 3 as described in this order,
  - temperatures of 212 degrees F and 100% relative humidity environment,
  - boiling water and/or steam environment,
  - a concentrated borated water environment, and
  - the impact of FLEX mitigating strategies.

Operator Action Feasibility

ACRS Recommendation of June 17, 2013:

Neither NEI 12-06 nor JLD-ISG-2012-01 provide sufficient guidance for evaluating the feasibility and reliability of the manual actions necessary to implement the mitigating strategies called for by Order EA-12-049. The guidance for the new mitigation strategies rule should address this issue.

U.S.NRC
United States Nuclear Regulatory Commission
Protecting People and the Environment

Operator Action Feasibility

> Strategies that have a time constraint to be successful should be identified and a basis provided that the time can reasonably be met.
>
> - NEI 12-06, Section 3.2.1.7

- Time constraints identified by thermal-hydraulic analyses.
  - NRC staff audit of analyses.
- Time constraints listed in integrated plan sequence of events.
- Licensee validation of FLEX Support Guidelines to determine time needed for performance.

Operator Action Feasibility
NEI Validation Process

- Supplement to normal procedure verification
- Determines time necessary to perform actions, and thus margin to time available
- Considers NUREG-1852/JLD-ISG-2012-05 App. C performance shaping factors
- Feedback available for low time margins to improve process to assure feasibility
- Roll up of results to support staffing/equipment needs

Operator Action Feasibility
NEI Validation Process

NRC Observations

- As licensees have implemented the process, they have identified issues and made corrections. This is an expected part of the process.
  - Incompatible fittings due to mismatched threads
  - Incompatible gaskets
  - Potential sources of debris
- Actual evaluation of PSF impacts on feasibility and reliability only possible for identified hazard levels
  - Re-evaluated flood hazard information a potential use

U.S.NRC
United States Nuclear Regulatory Commission
Protecting People and the Environment

Thank You

U.S.NRC
United States Nuclear Regulatory Commission
Protecting People and the Environment

Acronyms

ACRS	Advisory Committee on Reactor Safeguards	PA	Project Authorization
BWRs	Boiling Water Reactors	PEICo	Pooled Equipment Inventory Company
EDF	Electricite de France	PSF	Performance Shaping Factors
ELAP	Extended Loss of AC Power	RCS	Reactor Coolant System
FIP	Final Integrated Plan	RCIC	Reactor Core Isolation Cooling
FLEX	Diverse and Flexible Coping Strategies	SAFER	Strategic Alliance for FLEX Emergency Response
ISE	Interim Staff Evaluation	SE	Safety Evaluation
HPCI	High Pressure Coolant Injection	PWROG	Pressurized Water Reactor Owners' Group
MS	Mitigation Strategies	SFPI	Spent Fuel Pool Instrumentation
NEI	Nuclear Energy Institute	TI	Temporary Instruction
NSAL	Nuclear Safety Advisory Letter	WCAP	Westinghouse Commercial Atomic Power (Westinghouse Topical Report)