December 23, 1998

Carolina Power and Light Company
ATTN: Mr. A. Williams
Training Manager
H. B. Robinson Steam Electric Plant
3581 West Entrance Road
Hartsville, SC 29550

SUBJECT: MEETING SUMMARY - TRAINING MANAGERS' CONFERENCE CONDUCTED ON NOVEMBER 5, 1998 - H. B. ROBINSON STEAM ELECTRIC PLANT

Dear Mr. Williams:

This letter refers to the Training Managers' Conference conducted at the Richard B. Russell Building on November 5, 1998. Representatives from all utilities in Region II participated in the meeting.

Enclosure 1 was the agenda used for the Training Managers' Conference, and Enclosure 2 is the list of attendees. We appreciate the participation of you and your staff and believe that the goal of providing an open forum for discussion of operator licensing issues was met. Mr. Gallo, Chief of the Operator Licensing and Human Factors Branch, Office of Nuclear Reactor Regulation (NRR), made a presentation as noted in the slides in Enclosure 3.

Additionally, I am enclosing our preliminary schedule for FY 1999 and FY2000 as Enclosure 4. Please review the schedule and supply comments to my staff or myself.

If you have any questions regarding the content of this letter, please contact me at (404) 562-4638.

Sincerely,

Original signed by
Thomas A. Peebles

Thomas A. Peebles, Chief
Operator Licensing and Human
Performance Branch
Division of Reactor Safety

Docket No.: 50-261
License No.: DPR-23

Enclosures: As noted

200079

cc w/encls:
D. E. Young, Site Vice President,
H. B. Robinson Steam Electric Plant

Distribution w/encls:
PUBLIC
B. Michael, DRS

RII:DRS
BMICHAEL:
12/11/98
Doc Name:

RII:DRS
TPEEBLES
12/14/98

Revised November 3, 1998

TRAINING AND OPERATIONS MANAGERS' CONFERENCE

U.S. Nuclear Regulatory Commission, Region II
Atlanta, Georgia

Meeting Agenda

November 5, 1998
Richard B. Russell Building Auditorium

Thursday, 11/5/98

8:00 a.m.	Conference Registration	
8:20 a.m.	Introduction	Thomas A. Peebles, Chief, Operator Licensing & Human Performance Branch
8:30 a.m.	Opening Remarks	William Travers, Executive Director of Operations
8:50 a.m.	Welcome / Issues Raised the Last Meeting	Bruce S. Mallett, Director Division of Reactor Safety
9:15 a.m.	break	
9:45 a.m.	Other Issues	Robert M. Gallo, Chief Operator Licensing Branch, NRR
10:15 a.m.	Lessons Learned from Recent Exams Sampling exam criteria	Charlie Payne
11:00 a.m.	Examination Communications Exam Development & Coordination	Ron Aiello
11:30 a.m.	Lunch	
1:00 p.m.	Written Examination Questions and Answers	Rick Baldwin / George Hopper
2:30 p.m.	JPM Examples of questions	Rick Baldwin / George Hopper
3:30 p.m.	Open Session - Other Issues	Training Managers
4:00 p.m.	Meet with Principle examiners	All
4:30 p.m.	Adjorn	

ATTENDEES AT THE NRC REGION II
TRAINING MANAGERS CONFERENCE
NOVEMBER 5, 1998

Sid Crouch	ATTSi	
David Lane	Sonalysts, Inc.	
Bill Fitzpatrick	INPO	

CP&L

Rick Garner	HR	Supv Ops Trng
William Noll	BK	Ops Trng Supv
Max Herrell	BK	Trng Mgr
Scott Poteet	RB	Exam Team Leader
Ralph Mullis	BK	Ops Mgr
Tony Pearson	BK	Ops Trng
Anthony Williams	RB	Trng Mgr

Crystal River - FPC

Wes Young	CR	Supv OpsTng
Tom Taylor	CR	Dir Nuc Ops Trng
Ivan Wilson	CR	Ops Mgr
Ken McCall	CR	Mgr Ops Trng

Duke Power

Gabriel Washburn	OC	Req Team Leader
Ronnie B. White, Jr	MG	Trng Mgr
W. H. "Soap" Miller	CT	Site Trng Mgr
Paul Stovall	OC	Mgr Oper Trng
Bentley Jones	OC	Trng Mgr
James Teofilak	CT	Ops Trng Mgr
Alan Orton	MG	Ops Trng Mgr
Richard Bugert	Corp	Ops Trng Spec

FP&L

Maria Lacal	TP	Trng Mgr
Dennis L. Fadden	SL	Services Mgr
Jo Magennis	Corp	Trng Assessment Spec
Tom Bolander	SL	Exam Development
Steve McGarry	TP	Maint Trng Supv

Southern Nuclear (SNC)

John C. Lewis	HT	Trng & EP Mgr
Bill Oldfield	FA	Nuc Ops Trn Supv
Steve Grantham	HT	Ops Trng Supv
Scott Fulmer	FA	Mgr Trng & EP
Joel Deavers	FA	Sr Plt Inst
Bob Brown	VG	Trng Mgr
Dan Scukanec	VG	Ops Trng Supv

Virginia Power

Steve Crawford	NA	Sr Inst Nuc
Harold McCallum	SR	Supv Ops Trng

TVA

Dick Driscoll	SQ	Trng Mgr
Walt Hunt	SQ	Ops Trng Mgr
Denny Campbell	BF	SRO Ops Inst
Jack Cox	WB	Trng Mgr
John Roden	WB	Ops Trng Mgr
Tom Wallace	WB	Ops Supt

V. C. Summer - SCE&G

Al Koon	SM	Ops Trng Supv

NRC Participants

Tom Peebles	R II	Operator Lic. Br. Ch.
Rick Baldwin	R II	Sr. Examiner
George Hopper	R II	Sr. Examiner
Ron Aiello	R II	Sr. Examiner
Charlie Payne	R II	Sr. Examiner
William Travers	NRC	Executive Dir. Ops.
R. M. Gallo	NRR	Br. Ch. OL
Bruce Mallett	R II	Div. Dir. Reactor Safety

FY 99 INITIAL EXAM SCHEDULE AND RESULTS

December 14, 1998

		RO		SRO-I		SRO-U		TOTAL	
Date Plant	**Chief**	Pass	#	Pass	#	Pass	#	Pass	#
9/28/98 Sequoyah	GTH					4	4	4	4
10/5/98 Harris	RFA	2	2	5	5			7	7
11/30/98 Oconee	GTH	2	2			5	5	7	7
11/30/98 St Lucie & 12/14/98	RSB		6		3				9
1/25/99 McGuire & 2/8/99	DCP		6		3		2		11
2/8/99 C. River & 2/22/99	GTH		6		6				12
2/8/99 B.Ferry	MEE		4		1				5
3/29/99 Surry & 4/12/99	RSB		5		2		4		11
4/12/99 Watts Bar & 4/26/99	MEE		6		3		5		14
5/10/99 Farley	GTH				7		1		8
5/24/99 Catawba & 6/7/99	PMS		8		5		3		16
6/28/99 St. Lucie	RSB				1		4		5
07/26/99 Robinson	MEE		3		2		2		7
08/30/99 Turkey Pt & 9/13/99	RFA		20						20
									136
RESULTS TO DATE		4	4	5	5	9	9	18	18
			100		100		100		100

No Initial exams scheduled for: Brunswick, North Anna and Vogtle

FY 00 region II write part of Summer & Hatch

FY 00 INITIAL EXAM SCHEDULE AND RESULTS

December 14, 1998

		RO		SRO-I		SRO-U		TOTAL	
Date Plant	**Chief**	Pass	#	Pass	#	Pass	#	Pass	0
9/27/99 Summer *region II write*	GTH		6						6
10/18/99 Hatch *region II write*	DCP				10		2		12
12/13/99 Vogtle	RSB		3		5		2		10
2/14/00 Brunswick & 2/28/00	DCP		12		3				15
03/**/00 Oconee ?									*10*
?04/10/00 Harris (maybe 10/00)									*10*
?05/03/00 St. Lucie	GTH				6		5		11
?05/**/00 B. Ferry			6		3		3		12
?05/03/00 McGuire					4		8		12
?06/07/00Farley	RSB				10		2		12
?07/26/00 Crystal River *region II write?*	RFA		3		3		3		9
?08/**/00 Sequoyah			4		2		2		8
?09/04/00 Surry?									*10*
?09/11/00 North Anna									12
	0	0	42	0	46	0	27	0	149

'?' designates tentative

No Initial exams scheduled for:

Catawba
Robinson
Turkey Point
Watts Bar

Operator Licensing Issues

Region II
Training Managers' Conference
November 5, 1998

Robert M. Gallo, Chief
Operator Licensing and
Human Performance Branch

OPERATOR LICENSING ISSUES

- Part 55 Rulemakings
  - Status
  - Schedule
- Final Revision 8 of NUREG-1021
- Examination Quality and Results
- Generic Fundamentals Exam
- Requal Inspections (IP-71001)
- Recent Information Notices
  - Exam Integrity (IN 98-15)
  - Sampling Plans (IN 98-28)
  - Eligibility (IN 98-37)

RECENT LESSONS LEARNED

by

Charlie Payne

Southeastern Training Manager's Conference
November 5, 1998

POLICY CLARIFICATIONS

- In general, the NRC prefers that the written exam be administered after the operating tests are complete.

  - Allows more time to finalize test.
  - More flexibility if delays occur.
  - Less stressful on candidates.

POLICY CLARIFICATIONS

- In general, license class sizes of greater than 8 candidates will be scheduled for 2 weeks as follows:

  - 1st exam week
  - off-week for documentation of week 1 performance
  - 2nd exam week

POLICY CLARIFICATIONS

- Examination submittals - 2 copies of draft and final exams (written, JPMs, and simulator scenarios). Electronic copy is also desired.

- Written exams submittals will be reviewed by following a sampling process. When criteria are met, review will be stopped and licensee called.

  Criteria - 10 unacceptable questions out of 30 questions sampled

RECENT LESSONS LEARNED

SRO-only Questions

- intended to sample those K/As specific to SRO duties (above and beyond those needed by an RO).
- purpose is to meet the requirements of 10 CFR 55.43(b) (items (1) - (7)).
- K/A catalog cross-references K/As to associated portions of 10 CFR 55.

2.0 GENERIC KNOWLEDGES AND ABILITIES

2.1 Conduct of Operations

2.1.1 **Knowledge of conduct of operations requirements.**
(CFR: 41.10 / 45.13)
IMPORTANCE RO 3.7 SRO 3.8

2.1.2 **Knowledge of operator responsibilities during all modes of plant operation.**
(CFR: 41.10 / 45.13)
IMPORTANCE RO 3.0 SRO 4.0

2.1.3 **Knowledge of shift turnover practices.**
(CFR: 41.10 / 45.13)
IMPORTANCE RO 3.0 SRO 3.4

2.1.4 **Knowledge of shift staffing requirements.**
(CFR: 41.10 / 43.2)
IMPORTANCE RO 2.3 SRO 3.4

2.1.5 **Ability to locate and use procedures and directives related to shift staffing and activities.**
(CFR: 41.10 / 43.5 / 45.12)
IMPORTANCE RO 2.3 SRO 3.4

2.1.6 **Ability to supervise and assume a management role during plant transients and upset conditions.**
(CFR: 43.5 / 45.12 / 45.13)
IMPORTANCE RO 2.1 SRO 4.3

2.1.7 **Ability to evaluate plant performance and make operational judgments based on operating characteristics / reactor behavior / and instrument interpretation.**
(CFR: 43.5 / 45.12 / 45.13)
IMPORTANCE RO 3.7 SRO 4.4

2.1.8 **Ability to coordinate personnel activities outside the control room.**
(CFR: 45.5 / 45.12 / 45.13)
IMPORTANCE RO 3.8 SRO 3.6

2.1 Conduct of Operations (continued)

2.1.19 **Ability to use plant computer to obtain and evaluate parametric information on system or component status.**
(CFR: 45.12)
IMPORTANCE RO 3.0 SRO 3.0

2.1.20 **Ability to execute procedure steps.**
(CFR: 41.10 / 43.5 / 45.12)
IMPORTANCE RO 4.3 SRO 4.2

2.1.21 **Ability to obtain and verify controlled procedure copy.**
(CFR: 45.10 / 45.13)
IMPORTANCE RO 3.1 SRO 3.2

2.1.22 **Ability to determine Mode of Operation.**
(CFR: 43.5 / 45.13)
IMPORTANCE RO 2.8 SRO 3.3

2.1.23 **Ability to perform specific system and integrated plant procedures during different modes of plant operation.**
(CFR: 45.2 / 45.6)
IMPORTANCE RO 3.9 SRO 4.0

2.1.24 **Ability to obtain and interpret station electrical and mechanical drawings.**
(CFR: 45.12 / 45.13)
IMPORTANCE RO 2.8 SRO 3.1

2.1.25 **Ability to obtain and interpret station reference materials such as graphs / monographs / and tables which contain performance data.**
(CFR: 41.10 / 43.5 / 45.12)
IMPORTANCE RO 2.8 SRO 3.1

2.1.26 **Knowledge of non-nuclear safety procedures (e.g. rotating equipment / electrical / high temperature / high pressure / caustic / chlorine / oxygen and hydrogen).**
(CFR: 41.10 / 45.12)
IMPORTANCE RO 2.2 SRO 2.6

2.4 Emergency Procedures /Plan (Continued)

2.4.32 **Knowledge of operator response to loss of all annunciators.**
(CFR: 41.10 / 43.5 / 45.13)
IMPORTANCE RO 3.3 SRO 3.5

2.4.33 **Knowledge of the process used track inoperable alarms.**
(CFR: 41.10 / 43.5 / 45.13)
IMPORTANCE RO 2.4 SRO 2.8

2.4.34 **Knowledge of RO tasks performed outside the main control room during emergency operations including system geography and system implications.**
(CFR: 43.5 / 45.13)
IMPORTANCE RO 3.8 SRO 3.6

2.4.35 **Knowledge of local auxiliary operator tasks during emergency operations including system geography and system implications.**
(CFR: 43.5 / 45.13)
IMPORTANCE RO 3.3 SRO 3.5

2.4.36 **Knowledge of chemistry / health physics tasks during emergency operations.**
(CFR: 43.5)
IMPORTANCE RO 2.0 SRO 2.8

2.4.37 **Knowledge of the lines of authority during an emergency.**
(CFR: 45.13)
IMPORTANCE RO 2.0 SRO 3.5

2.4.38 **Ability to take actions called for in the facility emergency plan / including (if required)supporting or acting as emergency coordinator.**
(CFR: 43.5 / 45.11)
IMPORTANCE RO 2.2 SRO 4.0

2.4.39 **Knowledge of the RO's responsibilities in emergency plan implementation.**
(CFR: 45.11)
IMPORTANCE RO 3.3 SRO 3.1

2.4.40 **Knowledge of the SRO's responsibilities in emergency plan implementation.**
(CFR: 45.11)
IMPORTANCE RO 2.3 SRO 4.0

2.4.41 **Knowledge of the emergency action level thresholds and classifications.**
(CFR: 43.5 / 45.11)
IMPORTANCE RO 2.3 SRO 4.1

RECENT LESSONS LEARNED

SRO-only Questions (Cont'd)

- ∴ SRO-only questions will be based on following categories: A.2, G2.1, G2.2, G2.3, and G2.4.

- differences between SRO and RO outlines shifts only 11 K/As from Tier 2 to Tiers 1 & 3. ⇒ Other 14 flexible.

Facility: Date of Exam: Exam Level:

Tier	Group	K/A Category Points											Point Total	
		K 1	K 2	K 3	K 4	K 5	K 6	A 1	A 2	A 3	A 4	G		
1. Emergency & Abnormal Plant Evolutions	1												26	
	2												17	
	Tier Totals												43	+7
2. Plant Systems	1												23	
	2												13	
	3												4	
	Tier Totals												40	-11

3. Generic Knowledge and Abilities	Cat 1	Cat 2	Cat 3	Cat 4		
					17	+4

Note:
- Attempt to distribute topics among all K/A categories; select at least one topic from every K/A category within each tier.
- Actual point totals must match those specified in the table.
- Select topics from many systems; avoid selecting more than two or three K/A topics from a given system unless they relate to plant-specific priorities.
- Systems/evolutions within each group are identified on the associated outline.
- The shaded areas are not applicable to the category/tier.

Facility:		Date of Exam:		Exam Level:

Tier	Group	K/A Category Points											Point Total
		K 1	K 2	K 3	K 4	K 5	K 6	A 1	A 2	A 3	A 4	G	
1. Emergency & Abnormal Plant Evolutions	1												13
	2												19
	3												4
	Tier Totals												36
2. Plant Systems	1												28
	2												19
	3												4
	Tier Totals												51

3. Generic Knowledge and Abilities	Cat 1	Cat 2	Cat 3	Cat 4	
					13

Note:
- Attempt to distribute topics among all K/A categories; select at least one topic from every K/A category within each tier.
- Actual point totals must match those specified in the table.
- Select topics from many systems; avoid selecting more than two or three K/A topics from a given system unless they relate to plant-specific priorities.
- Systems/evolutions within each group are identified on the associated outline.
- The shaded areas are not applicable to the category/tier.

RECENT LESSONS LEARNED

Sampling Criteria

- intent of process is to avoid exam predictability.
- also to avoid excessive use of repeat test items.
- first use systematic process to develop sample plan using topics from K/A catalog, then use facility question resources to accomplish the plan.

BWR SRO Examination Outline
Emergency and Abnormal Plant Evolutions - Tier 1/Group 1

E/APE # / Name / Safety Function	K 1	K 2	K 3	A 1	A 2	G	K/A Topic(s)	Imp.	Points
295003 Partial or Complete Loss of AC Pwr / VI									
295006 SCRAM / I									
295007 High Reactor Pressure / III									
295009 Low Reactor Water Level / II									
295010 High Drywell Pressure / V									
295013 High Suppression Pool Temp. / V									
295014 Inadvertent Reactivity Addition / I									
295015 Incomplete SCRAM / I									
295016 Control Room Abandonment / VII									
295017 High Off-site Release Rate / IX									
295023 Refueling Accidents Cooling Mode / VIII									
295024 High Drywell Pressure / V									
295025 High Reactor Pressure / III									
295026 Suppression Pool High Water Temp. / V									
295027 High Containment Temperature / V									
295030 Low Suppression Pool Water Level / V									
295031 Reactor Low Water Level / II									
295037 SCRAM Condition Present and Power Above APRM Downscale or Unknown / I									
295038 High Off-site Release Rate / IX									
500000 High Containment Hydrogen Conc. / V									
K/A Category Totals:							Group Point Total:		

RECENT LESSONS LEARNED

Sampling Criteria (Cont'd)

- each topic in each tier & group should be sampled at least once unless insufficient questions exist to do this. If all topics have been sampled once and other questions need to be selected, the process should be systematic and unbiased.

- final sample plan should have a fairly even balance across all Ks & As.

RECENT LESSONS LEARNED

Sampling Criteria (Cont'd)

- up to 25 questions from last two NRC exams, facility licensee exams, tests & quizzes (except final audit test) may be used.
- Chief Examiner (CE) has the option to unilaterally shift or change the selected K/As.
- up to 5 site-specific priorities may be identified with CE concurrence (K/A value may be < 2.5 with sufficient justification).

OTHER

Record Keeping

- per 10 CFR 55 are required to provide evidence that the applicant has successfully completed the facility licensee's requirements to be licensed as an operator.

- this includes successful manipulation of the controls of their facility. As a minimum, 5 significant control manipulations which affect reactivity or power level.

OTHER

Record Keeping (Cont'd)

- this information should be retained and available for inspection from time of license application to license expiration.

OTHER

Requal Control Manipulations

- if have program based on SAT process, list in 10 CFR 55.59(c)(3) does not need to be strictly followed.
- should have something similar based on plant JTA and specific plant priorities.
- some manipulations are individual operator oriented, most would be team oriented.

OTHER

Requal Control Manipulations (Cont'd)

- credit for accomplishment should only be given for <u>active</u> participation in the manipulation.

- NOTE: control manipulations are <u>not</u> synonymous with reactivity manipulations.

Examination Communications

Examination Development

&

Coordination

By

Ronald F. Aiello

Facility Suggested Improvements

1. The exam development team and lead examiner should meet at the beginning of the development process to establish common grounds for the development and execution of the examination:

   - Changes and interpretations to the NUREG.

   - Scope of the exam development and administration process.

   - Lessons learned from the last exam administered.

2. Move due dates for the outline and the exam back to 90 and 60 days prior to prep week. This will provide more time for examination review by the examiner(s).

3. SSNTA continue with efforts to standardize document formats for examination tools (JPMs and scenarios).

4. Examiners maintain a list of who (plant) does the exam process the best. This should probably be broken down to each portion of the examination. Provide your ratings to the utilities in Region 2, so we can meet your expectations and improve.

5. The principal and the utility representative should meet early to establish a working relationship and expectations. If possible this should include samples of questions, JPMs, etc.

6. The exam should have no outstanding issues/questions that arise and need repair at the last minute. These issues should all have been identified by the prep week, to allow time to make changes that meet all the criteria.

7. The chief examiner should explain up front all the forms in 1021 that need to be completed.

8. Always check on badging prior to coming on site.

9. As soon as a Chief Examiner is assigned to an exam, the Facility Rep and the Chief should verify the ability to communicate via all channels (including e-mail). When we converted to Lotus Notes, the facility was suddenly unable to send e-mail to his Chief Examiner. This

became somewhat of a hindrance and should be avoided if possible.

10. It would be helpful if the Chief Examiner could provide his schedule to the Facility Rep. This includes providing updates for any changes to the Chief Examiner's schedule along the way. The facility rep needs to be aware of when the Chief Examiner is available to assist in exam preparation activities.

11. A face-to-face meeting should be promptly scheduled in order for the Chief to communicate his expectations to the Facility Rep. The face-to-face requirement could be waived if the Chief and the Facility Rep have previously worked together and the Facility Rep is confident that he/she understands the Chief's expectations. In any case, a

conference call would be the minimum to satisfy this important first step.

12. The Chief and the Facility Rep should work together to establish a firm schedule for the exam week(s). This will ensure the most efficient schedule is developed (with respect to crew composition and personnel movement) to minimize the amount of exam material required.

13. The Chief Examiner and Utility Rep MUST remain fixed during the entire 180 day period. Handing off the responsibility is both disruptive and destructive to communication. The expectations of the chief examiner must be defined/communicated early.

14. The "timeline" must be enhanced to identify specific times and dates for communication/working meetings between

the examiner and the utility rep. These meetings should be "face to face" to assure expectations are understood, and being met, early on.

15. If an examiner and a utility rep have not worked together before, the timeline for "deliverables" must be expanded. Working meetings (face to face) must be established for the examiner to review 5-10 questions, 1 scenario, 1 jpm, 5 jpm knowledge questions, 5 admin questions, etc. to assure that the standards and expectations are clear early in the process and that the utility can produce a product that meets the expectation.

16. 398 and 396 forms need to be available electronically. We took the time to develop an electronic version ourselves but I would prefer that the electronic master copies came directly from the NRC

so that we have more confidence that everything is exactly the same. We would all benefit from this improvement.

17. A face to face working meeting of eight (8) to twelve (12) hours, approximately two (2) weeks before the thirty (30) day submittal must be established to resolve any issues BEFORE the submittal. The exam materials should be reviewed, line by line, at this meeting to communicate all changes necessary.

18. Expectations must be established early so that the utility clearly understands the rules and the examiners expectations. Small samples of development must be reviewed early to assure expectations are being met. A face to face meeting, prior to the 30 day submittal, to resolve any/all issues must be scheduled such that adequate time (suggest 2 weeks) is available to resolve

comments before the 30 day limit. No one wants to see 30 questions reviewed and the exam rejected. Spending ~24 hours in 3-4 face to face meetings is a small/smart price to pay to avoid hundreds of hours of re-development, the emotional stress on candidates when the exam must be rescheduled and the impact on the plant when candidates are not licensed to meet plant needs.

19. The "new" SSNTA format for JPM level of detail is NOT what you have liked in the past and needs to be either accepted by the NRC as a standard or optimum format, or modified, or rejected. The JPMs we submitted to you were in the format and level of detail you had found acceptable in the past, and we were surprised to find that they needed significant last-minute rework (additional level of detail).

20. Maybe Chief Examiners could send some copies of good written questions, JPMs, and JPM questions up front that could help a new developer survive the exam writing process and see where you as an examiner are coming from.

Facility General Comments

1. The limited number of NRC license examiners puts the Region and the sites at a disadvantage with respect to getting timely interchange. If the examiner is out of the office on a trip for several weeks, the time you have to provide the licensee with feedback is very limited and results in a real struggle to ensure a quality exam. The limited resources and interaction time increases the risk of lower quality.

2. Region II examiners have been very prompt in getting back to us when we have a question even though you may be at a remote location.

3. The quality of the communications has been good. All of the examiners that I have talked to have been thorough, precise and have performed listening checks to

verify that the correct messages were sent and received. I would however, like to see more communications by e-mail where appropriate. That would help ensure the clarity of the communications even more.

4. With respect to the exam specifically; there were a number of changes that were made and we had to transmit those by expensive overnight or next day delivery. If we could figure out a secure e-mail method it would save all of us numerous headaches as well as dollars.

5. During my first face-to-face meeting with the Chief Examiner (to review draft exam material), I gained much-needed insight into his expectations. This alleviated much stress on my part and, from then on, the process went much more smoothly. The Chief was very helpful during subsequent telephone conversations and our second

meeting in Atlanta. He was very easy to work with and very understanding concerning my inexperience in this process. His patient guidance was the key to our success in this endeavor. Next time, with all we've learned, we'll do even better.

6. The biggest problem that I encountered during that exam came from the written portion that was being developed by the contractor. Since he had written exams before, I assumed that the quality of questions he was submitting to us were the quality of questions that were acceptable to the NRC. We reviewed his work, made technical corrections and assumed that the questions would be accepted by the NRC. I had very little communication with the NRC on the subject of the written exam and a great deal of communication on the subject of the operating exam. When the submittal was finally made, the focus went

to the written exam and most of the communication was made over speaker phones (about 40 hours). It became a very painful process and could have been avoided had I not put so much faith in the contractor's exam writing experience and communicated more on the subject of the written exam with the chief. We had a 100% pass rate on the exam, but the exam report was brutal in the area of the written exam.

7. Know the chief examiners expectations from the beginning (prior to any development).

8. Never assume you know what you're doing - the chief is just a phone call away.

9. It's better to deliver material and review it in person rather than over the phone. I plan for four or five trips between the start of

development and prep week. It may sound like overkill, but it works (It's also safer in the area of security).

10. Submit material early (especially the written). I like to have the written exam a done deal prior to the actual submittal date.

11. You can never talk to the Chief Examiner too much. During the process, I talk to him more than I talk to my mother.

12. The bottom line is that frequent communication, personal contact, and early submittal of materials is the key to a successful NRC exam.

13. ALL problems/changes must be resolved at the level of the examiner and the utility rep. In no case should problems/changes be reported/escalated to senior management of the utility or NRC unless

both the examiner and the utility rep are at an absolute, and mutually agreed, impasse.

14. We often felt that we were working in the dark, writing questions on topics you may not want (as we were waiting for comment on our skyscrapers), possibly wasting resources, but seeing no other option to meet our required cast-in-stone deadlines.

15. It's difficult to keep JPMs short and plausible at the same time.

16. What is a good "admin JPM", especially for ROs?

Question: 10

The unit is operating at 20% power with all systems in automatic. Bank 'D' control rods are at 120 steps. Control Bank 'C' rod H6 drops to the bottom of the core. No rod control urgent failure alarms occur.

Where will thermal power and RCS Tavg stabilize in response to the dropped rod without any operator action?

A. Reactor thermal power will be lower than prior to the dropped rod; RCS Tavg will be more than 5°F lower than the temperature prior to the dropped rod.

B. Reactor thermal power will be lower than prior to the dropped rod; RCS Tavg will be within 1°F of the temperature prior to the dropped rod.

C. Reactor thermal power will be the same as prior to the dropped rod; RCS Tavg will be within 1°F of the temperature prior to the dropped rod.

D. Reactor thermal power will be the same as prior to the dropped rod; RCS Tavg will be more than 5°F lower than the temperature prior to the dropped rod.

Answer:

C Reactor thermal power will be the same as prior to the dropped rod; RCS Tavg will be within 1°F of the temperature prior to the dropped rod.

SRO Question	10	*RO Question*	10
SRO Tier/Group	1/1	*RO Tier/Group*	1/2
SRO Importance	3.7	*RO Importance*	3.2
10CFR55.43(b) Item Addressed		*10CFR55.41 Item Addressed*	8

KA Number 000003AK1.01

KA Statement Knowledge of the operational implications of the following concepts as they apply to Dropped Control Rod: Reason for turbine following reactor on dropped rod event

SHNPP Objective AOP-LP-3.1-2
RECOGNIZE automatic actions that are associated with AOP-001, Malfunction of Rod Control and Indication Systems

References

AOP-LP-3.1	AOP-001
AOP-001	Malfunction of Rod Control and Indication Systems
SD-104	Rod Control System

Question Source New

Justification

(A) Select if he does not recognize that rods will step out to restore temperature and power was restored due to the previous decrease in temperature.

(B) Select if he recognizes that rods will step out, but the decreased temperature adds positive reactivity to restore power.

(C) **CORRECT** - Power will initially decrease due to the dropped rod. As power decreases, temperature will decrease. As temperature decreases, positive reactivity is added to restore power. Bank D rods in auto will cause rods to step out. Rods stepping out will restore power and temperature to the original value.

(D) Select if he recognizes that power was restored due to the previous decrease in temperature, but does not recognize that rods will step out to restore temperature and

INITIAL EXAMINATIONS

QUESTIONS AND ANSWERS

TRAINING MANAGERS CONFERENCE
NOVEMBER 5, 1998

RICK BALDWIN
&
GEORGE HOPPER

Initial Written Examinations

Reference:

All written examinations are written IAW ES-401, "Preparation of Site-Specific Written Examinations for Power Reactors." Using ES-401-1, ES-401-2, ES-401-3, ES-401-4 , BWR/PWR, RO/SRO EXAMINATION OUTLINES, and ES-401-6 Written Examination Quality Assurance Checkoff Sheet."

OBJECTIVES

- BETTER EXAMINATION PRODUCT
- LESS NRC/FACILITY REWORK
- SHARED EXPECTATIONS

SESSION OBJECTIVE:

To review validity concepts affecting the NRC

written examination for the purpose of:

Instructing licensee personnel toward

construction of more VALID and CONSISTENT NRC license examinations.

COVERAGE

- 3 Levels of Validity
- 3 Levels of Knowledge
- Discrimination, Sampling
- Psychometrics

VALIDITY

A valid test is one which tests what it intends to test.

In *training* examinations, testing specific skills and knowledge outlined and taught in the objectives.

In *licensing* examinations, testing specific skills and knowledge that SHOULD have been outlined in the objectives.

3 LEVELS OF VALIDITY

- Content
- Operational
- Discriminant

CONTENT VALIDITY

Addresses K/A coverage and sampling plan coverage.

OPERATIONAL VALIDITY

Addresses two aspects:

1. Is the test item important to be known as a part of the operator's job?

2. Does the test item require the candidate to perform a job RELATED mental or physical operation?

DISCRIMINANT VALIDITY

Addresses:

- The cut score is the performance level that we use for making a pass/fail decision 80 percent.
- The exam must be written at a level of difficulty that *intends* to discriminate at the 80 percent level.
- The question, its stem and distractor, interplay, by DESIGN, at least 80 percent of the candidates taking the exam should answer the item correctly.

VALIDITY SUMMARY

1. The exam must be content valid, encompassing job safety significance and sampling.
2. The test item should be operationally oriented: a expected mental or psychomotor requirement of the job. The items should be written at the comprehension or analysis level vice simple memory. Items that measure problem solving, prediction, analysis which are essential to job performance.

VALIDITY SUMMARY

3. The exam must discriminate at a moderate level of difficulty, set by the cut score. Meaning the test items as written should provide opportunity for at least 80 percent of the candidates taking the test should answer the item correctly.

3 LEVELS OF KNOWLEDGE
Bloom's Taxonomy

- Analysis, Application, Synthesis
- Comprehension
- Fundamental (simple memory)

LEVEL OF KNOWLEDGE

- Bloom's Taxonomy, NRC Reference Benchmark to classify levels of knowledge.

- Bloom's Taxonomy, a classification scheme that classifies items by depth of mental performance required to answer the items.

- Bloom's Taxonomy, can be applied to written, scenarios or JPM questions.

LEVELS

LEVEL 1

Fundamental, using simple mental processes, recall or recognition of discrete bits of information.

i.e. setpoints, definitions, or specific facts.

LEVEL 2

Comprehension, involves understanding material through relating it to its own parts or other material:

i.e. including rephrasing information in different words, recognizing relationships , including consequences or implications.

LEVEL 3

Analysis, synthesis, and application testing is more active and product-oriented testing which involves the multi-part mental process of assembling, sorting, or integrating the parts so that the whole, and the sum can be used to: predict and event or outcome, solve a problem or create something new.

i.e. using knowledge to solve problems.

DETERMINANTS OF DISCRIMINATION

- Level of examination knowledge
- Level of examination difficulty
- Passing Score
- Item bank use

NATURE OF EXAMINATIONS AND TESTS

- TESTS are samples of PERFORMANCE
  - Infer overall performance based on a sample
  - Sample must be broad-based to make confident inference
  - Sample must NOT be fully predictable or inferences cannot be made on untested areas.
  - Items MUST discriminate otherwise it has little or NO value.

PSYCHOMETRICS

Items may have one or more of the following psychometric errors:

1. Low level of knowledge (fundamental)
2. Low operational validity (not job related)
3. Low discriminatory validity (hard or easy)
4. *Implausible distractors*
5. Confusing language or ambiguous questions
6. Confusing or inappropriate negatives
7. Collection of true/false statements
8. Backwards logic

006 Emergency Core Cooling System / JPM 136 Recovery From Safety Injection and Solid Water Conditions

Question 2:
Given the following plant conditions:
Unit 2 was operating at 100% power.
The plant experienced a large break LOCA with a failure of the ECCS system.
FR-C.1, "Response to Inadequate Core Cooling," is being implemented.
Core exit TCs are 720°F and increasing.
At this point FR-C.1 directs the crew to depressurize intact steam generators.

a.) What is the basis for the direction in FR-C.1 to depressurize intact steam generators?
b.) Why is this action taken?

References Allowed? YES ___X___ NO _____.

Answer:
a.) To reduce RCS pressure below 125 psig
b.) To allow the ECCS accumulators and RHR pumps to inject water to the RCS.

Reference:
KA: 006G4.18 [2.7 / 3.6] Knowledge of specific bases for EOPs.
OPL271C398 pg 12-15

Applicant Response: SAT ___ UNSAT ___

STEP	ACTION/EXPECTED RESPONSE	RESPONSE NOT OBTAINED

NOTE

- Blocking low steamline pressure SI as soon as pressurizer pressure is less than 1920 psig will prevent an inadvertent MSIV closure and keep the condenser available for steam dump.
- After the low steamline pressure SI signal is blocked, main steamline isolation will occur if the high steam pressure rate is exceeded.
- S/G depressurization at the maximum rate may cause S/G narrow range levels to drop to less than 10% [25% ADV]. This is acceptable and expected for this inadequate core cooling condition.

14. **DEPRESSURIZE** Intact S/Gs to reduce RCS pressure to less than 125 psig:

    a. **WHEN** RCS pressure less than 1920 psig,
    THEN
    PERFORM the following:

    1) **BLOCK** low steamline pressure SI.

    2) **CHECK** STEAMLINE PRESS ISOL/SI BLOCK RATE ISOL ENABLE permissive LIT. [M-4A, A4]

    b. **DUMP** steam to condenser at maximum rate.

    b. **DUMP** steam at maximum rate **USING** Intact S/G atmospheric relief(s).

    IF local control of atmospheric relief(s) is necessary,
    THEN
    DISPATCH personnel to dump steam **USING** EA-1-2, Local Control of S/G PORVs.

(Step continued on next page.)

026 Containment Spray System / JPM # 57AP Respond to High Containment Pressure, Place RHR Spray in Service

Question 2:
Given the following plant conditions:
Unit 1 has tripped from 100% power due to a LOCA.
Containment pressure is 3.0 psid
Transfer of Containment Spray pump suction to the containment sump is being performed in accordance with ES-1.3, Transfer to RHR Containment Sump.

a.) Why must both CS pumps be placed in PULL-TO-Lock while transferring suction to the containment sump?
b.) What does placing both CS pumps in PULL-TO-Lock prevent?

References Allowed? YES ___X___ NO _____.

Answer:
a.) While shifting to the containment sump, both the RWST and the containment sump suction valves to the CS pumps will be closed at the same time.
b.) Placing the CS pumps in PULL-TO-Lock will prevent running a CS pump without a source of water.

Reference:
K/A: 026G4.18 [2.7 / 3.6] Knowledge of specific bases for EOPs
OPL271C024 pg 14-18, CCD NO:1-47W611-72-1, ES-1.3, pages 11-13, OPL271C388 pg 9

Applicant Response: SAT ___ UNSAT ___

A.1: Shift Staffing

Question 1: A licensed RO has been off-shift for 6 months to assist in scheduling an upcoming outage. He had his last physical examination 18 months ago and has had satisfactory performance in the licensed operator requalification training program. He is informed that he is needed to join a shift crew in 3 days to fill in for a vacationing Unit OATC.

Can the RO fill in for the vacationing RO? Why or why not?

References Allowed? YES _X_ NO ___

Answer: No. The RO must first reactivate his license by completing at least 40 hours of "under direction" on-shift time.

Reference: SSP-12.1, Conduct of Operations, p. 61 and 62
K/A 2.1.4 (2.3/3.4)

Applicant Response: SAT ___ UNSAT ___

A.1: Shift Staffing

Question 1: A licensed RO has been off-shift for 6 months to assist in outage scheduling. He is informed that he is needed to join a shift crew in 2 weeks to fill in for a vacationing shift RO. He had a satisfactory physical examination 18 months ago and has maintained satisfactory performance in the licensed operator requalification training program. In anticipation of rejoining a shift crew, the RO has spent two 8-hour shifts in the control room as the OATC during the past month under the direction of a shift RO.

What additional requirements must be met by the RO before he may fill in for the vacationing RO?

References Allowed? YES _X_ NO ___

Answer: The RO must complete an additional 24 (40 – 16) hours of "under direction" on-shift time that must include a plant tour and shift turnover.

Reference: SSP-12.1, Conduct of Operations, p. 61 and 62
K/A 2.1.4 (2.3/3.4)

Applicant Response: SAT ___ UNSAT ___

Given the following conditions:

1. The reactor has experienced a Steam Generator Tube Rupture.
2. All systems responded as expected.
2. The performance of EOP-04 is in progress.
3. One Steam Generator has been isolated.
4. All RCPs have been stopped.
5. RCS cooldown using natural circulation is in progress.

Which One of the following describes the concern associated with the isolated SG pressure prior to placing the RCS on SDC?

a. The isolated SG pressure would be too low due to excessive cooldown causing RCS water to enter the SG and reducing RCS inventory.

b. The strategy during the performance of EOP-04 is to maintain the affected SG pressure slightly less that RCS pressure to prevent secondary water entering the RCS.

c. Since the RCS cooldown rate was maintained greater than 30deg/hr. the affected loop has not been cooled sufficiently to allow SG depressurization.

d. The affected SG pressure is high due to thermal stratification of the secondary water.

65. Given the following conditions:

- The reactor has experienced a Steam Generator Tube Rupture.
- All systems responded as expected.
- The performance of EOP-04 is in progress.
- One steam generator has been isolated.
- RCS cooldown using natural circulation is in progress.

Which ONE of the following describes the concern associated with the affected SG pressure prior to placing the RCS on SDC?

a. The SG pressure would be too low due to excessive cooldown causing RCS water to enter the SG and reducing RCS inventory.

b. The SG pressure would be slightly less than RCS pressure causing water to enter the RCS resulting in a dilution.

c. The SG temperature would be too high to allow for SG depressurization.

d. The SG pressure would be too high due to thermal stratification of the secondary water.

Which one of the following describes the response of the Unit 1 charging pumps following receipt of an automatic SIAS signal, coincident with a Loss of Offsite Power?

a. One charging pump is automatically started on each emergency bus 5 minutes after it is energized by the diesel.

b. All charging pumps are automatically started immediately after their respective bus is energized.

c. The operator must manually start one charging pump on each emergency bus 5 minutes after it is energized by the diesel.

d. One charging pump is automatically started onto each emergency bus immediately after it is energized by the diesel.

19. Which ONE of the following describes the response of the Unit-1 charging pumps following receipt of an automatic SIAS signal, coincident with a Loss of Offsite Power? Assume normal electrical lineup and all equipment is operable.

a. Only one charging pump is automatically started on each emergency bus 5 minutes after it is energized by the diesel.

b. All charging pumps are automatically started immediately after their respective bus is energized by the diesel.

c. All charging pumps are automatically started 5 minutes after their respective buses are energized by the diesel.

d. Only one charging pump is automatically started onto each emergency bus immediately after it is energized by the diesel.

Charging pumps are running on Unit 1 an SIAS is present. (Assume no operator action)

Which one of the following lists the charging pump response when the BAM tanks are emptied?

The charging pumps will:

a. trip on low oil pressure.

b. trip on low suction pressure.

c. automatically align to the RWT.

d. continue to run and become gas bound.

27. Charging pumps are running on Unit 1 and an SIAS is present. (Assume no operator action)

Which ONE of the following lists the charging pump response when the BAM tanks are emptied?

The charging pumps will:

a. trip on thermal overload.

b. trip on low suction pressure.

c. automatically align to the RWT.

d. continue to run and become gas bound.

Given the following conditions:

Unit 1 CEDM fan HVE-21A is in AUTO after START
Unit 1 CEDM fan HVE-21B is in AUTO after STOP.
Unit 1 CEDM fan HVE-21A trips on overcurrent.

Which ONE of the following completely lists the logic that will start HVE-21B?

a. The trip signal from HVE-21A.

b. The trip signal from HVE-21A concurrent with a low flow signal.

c. A low flow signal.

d. The trip signal from HVE-21A concurrent with a low flow signal and air inlet temperature to the cooling coils is greater than 100 deg F.

59. Given the following conditions:

- Unit 1 CEDM fan HVE-21A is in AUTO after START.
- Unit 1 CEDM fan HVE-21B is in AUTO after STOP.
- Unit 1 CEDM fan HVE-21A trips on overcurrent.

Which ONE of the following lists the signals required by the logic needed to start HVE-21B?

a. The trip signal from HVE-21A.

b. The trip signal from HVE-21A concurrent with a low flow signal.

c. A low flow signal.

d. The trip signal from HVE-21A concurrent with a low flow signal and air inlet temperature signal to the cooling coils is greater than 100 ° F.

13. Given the following plant conditions:

- Unit 1 was at 73% power
- A reactor trip/safety injection on low steam line pressure occurred 21 minutes ago
- Average Core Exit TC temperature is 375°F
- RCS pressure is 225 psig
- All S/G pressures are DECREASING slowly
- #2 and #3 S/G levels are 5% NR and DECREASING slowly
- #1 S/G level is 6% NR, and INCREASING slowly
- #4 S/G level is STEADY at 2% NR
- Total feedwater flow is 340 gpm
- PZR level is 37% and INCREASING
- RCS T-cold temperature is 325°F and DECREASING slowly
- Containment pressure is 5 psid and INCREASING slowly

At this point, which ONE of the following Critical Safety Functions is the MOST degraded?

a. Heat Sink

b. Core Cooling

c. Containment

d. Pressurized Thermal Shock

Answer: A

K/A: 000040K101 [4.1/4.4]

Reference: E-0, Foldout Page

Objective: OPL271C395, B.1

Level: Analysis

Source: [redacted] 000040K101 001

History: Stem and distracters a and d modified (7/7/98)

Note: Provide PTS curve with this question.

Justification:

a. Correct answer because all S/G levels are less than 10% NR and total feedwater flow is less than 440 gpm.

b. Incorrect because RCS temperature is 325°F (core exit T/Cs less than 1200°F).

c. Incorrect because containment pressure is less than 12.0 psid.

d. Incorrect because RCS temperature is 325°F (T-cold is greater than 250°F).

13. Given the following plant conditions:

- Unit 1 was at 73% power
- A reactor trip/safety injection on low steam line pressure occurred 21 minutes ago
- Average Core Exit TC temperature is ~~375~~°F
- RCS pressure is ~~225~~ psig 1350 900
- All S/G pressures are DECREASING slowly
- #2 and #3 S/G levels are 5% NR and DECREASING slowly
- #1 S/G level is 6% NR, and INCREASING slowly
- #4 S/G level is STEADY at 2% NR
- Total feedwater flow is 340 gpm
- PZR level is ~~37~~% and INCREASING
- RCS T-cold temperature is 325°F and DECREASING slowly
- Containment pressure is 5 psid and INCREASING slowly

At this point, which ONE of the following Critical Safety Functions is the MOST degraded?

a. Heat Sink

b. Core Cooling

c. Containment

d. Pressurized Thermal Shock

Answer: A

K/A: 000040K101 [4.1/4.4]

Reference: E-0, Foldout Page

Objective: OPL271C395, B.1

Level: Analysis

Source: [redacted] 000040K101 001

History: Stem and distracters a and d modified (7/7/98)

Note: Provide PTS curve with this question.

Justification:

a. Correct answer because all S/G levels are less than 10% NR and total feedwater flow is less than 440 gpm.

b. Incorrect because RCS temperature is 325°F (core exit T/Cs less than 1200°F).

c. Incorrect because containment pressure is less than 12.0 psid.

d. Incorrect because RCS temperature is 325°F (T-cold is greater than 250°F).

Does not seem physically possible to have Dropped rod stability with all SG and have only 37% PZR level with [illegible]

20. Given the following plant conditions:

- The control room has been evacuated due to a fire
- All controls have been transferred per AOP-C.04
- MDAFW pumps 1A-A and 1B-B are injecting into the steam generators
- The TDAFW pump has been shut down
- Steam generator pressures and levels are decreasing

Which ONE of the following describes the response of the auxiliary feedwater system?

a. The TDAFW pump will automatically restart when 2/4 steam generators reach low low level.

b. The MDAFW pump level control valves will automatically control steam generator levels at 33%.

c. The MDAFW pump level control valves will have to be manually adjusted using the Manual Output Adjust in the L-381 cabinet.

d. The discharge pressure for the MDAFW pumps will have to be manually adjusted by throttling the manual valves at the LCVs.

Answer: B

K/A: 000068A102 [4.3 / 4.5]

Reference: AOP-C.04, page 11.

Objective: OPL271C423, B.4

Level: Comprehension

Source: [redacted] 000068A102 001

History: Used on 9/97 RO NRC exam
Text modified to correct grammar errors. Distracters a, b, c, and d reordered (7/22/98). Distracter be restructured (7/29/98)

Note: **Selected from [redacted] exam bank with minor modification of text**

20. Given the following plant conditions:

- The control room has been evacuated due to a fire
- All controls have been transferred per AOP-C.04
- MDAFW pumps 1A-A and 1B-B are injecting into the steam generators
- The TDAFW pump has been shut down
- Steam generator pressures and levels are decreasing

How SG water level will be controlled IAW AOP-C.04

Which ONE of the following describes ~~the response of the auxiliary feedwater system~~?

a. The TDAFW pump will automatically restart when 2/4 steam generators reach low low level. and must be manually throttled using FROM L-381.

b. The MDAFW pump level control valves will automatically control steam generator levels at 33%.

c. The MDAFW pump level control valves will have to be manually adjusted using the Manual Output Adjust in the L-381 cabinet.

NOT A RESPONSE NOT POSSIBLE

d. The discharge pressure for the MDAFW pumps will have to be manually adjusted by throttling the manual valves at the LCVs.

Answer: B

K/A: 000068A102 [4.3 / 4.5]

Reference: AOP-C.04, page 11

Objective: OPL271C423, B.4

Level: Comprehension

Source: [redacted] 000068A102 001

History: Used on 9/97 RO NRC exam
Text modified to correct grammar errors. Distracters a, b, c, and d reordered (7/22/98). Distracter be restructured (7/29/98)

Note: **Selected from [redacted] exam bank with minor modification of text.**

23. Given the following plant conditions:

- FR-C.1, "Inadequate Core Cooling", has been entered due to a RED path on Core Cooling
- Core exit temperatures (TCs) are 1250°F and increasing
- NO Feedwater / Aux Feedwater is available
- At step 12, the CRO checks the S/G NR levels and reports all are <10%.

As the SRO you should: (Select ONE of the following)

a. Go to FR-H.1, "Loss of Secondary Heat Sink".

b. Depressurize all intact S/Gs to atmospheric pressure to dump accumulators.

c. Start RCPs one at a time, until core exit TCs are less than 1200°F.

d. Prepare to initiate RCS Feed and Bleed if WR level in any 2 S/Gs is less than 60%.

Answer: C

K/A: 000074K307 [4.0/4.4]

Reference: FR-C.1, pages 10 & 17

Objective: OPL271C398

Level: Comprehension

Source: [redacted] Exam Bank 101. 000074K307 001

History: Used on HLC 9807 practice exam
Distracters b and c reordered

Note: **Selected from [redacted] exam bank without modification of text**

STEP	ACTION/EXPECTED RESPONSE	RESPONSE NOT OBTAINED
	CAUTION **Use of a Faulted or Ruptured S/G during performance of the following steps may compound the emergency situation. When NO Intact S/Gs are available, a Faulted or Ruptured S/G may be used.**	
12.	**MAINTAIN** Intact S/G narrow range levels:	
	a. Greater than 10% [25% ADV]	a. **MAINTAIN** total feed flow greater than 440 gpm UNTIL level greater than 10% [25% ADV] in at least one S/G. **IF** total feed flow greater than 440 gpm can **NOT** be established, **THEN** **PERFORM** the following: 1) **CONTINUE** attempts to establish heat sink in at least one S/G. 2) **GO TO** Note prior to Step 21.
	b. Between 10% [25% ADV] and 50%.	

STEP	ACTION/EXPECTED RESPONSE	RESPONSE NOT OBTAINED
	NOTE RCP damage due to absence or loss of normal support conditions is an acceptable consequence in this procedure.	
21.	**CHECK** if RCPs should be started:	
	a. **CHECK** core exit T/Cs greater than 1200°F.	a. **GO TO** Step 22.
	b. **CHECK** if idle RCS loop available:	b. **PERFORM** the following:
	1) S/G narrow range level greater than 10% [25% ADV]	a) **OPEN** pressurizer PORVs and block valves.
	2) RCP in associated loop AVAILABLE **AND** STOPPED.	b) **IF** core exit T/Cs remain greater than 1200°F, **THEN** **OPEN** reactor vessel head vents: • FSV-68-394 • FSV-68-395 • FSV-68-396 • FSV-68-397.
		c) **GO TO** Step 22.
	c. **START** RCP in one idle loop.	
	d. **GO TO** Substep 21.a.	

23. Given the following plant conditions:

- FR-C.1, "Inadequate Core Cooling", has been entered due to a RED path on Core Cooling
- Core exit temperatures (TCs) are 1250°F and increasing
- NO Feedwater / Aux Feedwater is available
- At step 12, the CRO checks the S/G NR levels and reports all are <10%.

As the SRO you should: (Select ONE of the following)

a. Go to FR-H.1, "Loss of Secondary Heat Sink".

b. Depressurize all intact S/Gs to atmospheric pressure to dump accumulators.

c. Start RCPs one at a time, until core exit TCs are less than 1200°F.

d. ~~Prepare to initiate RCS Feed and Bleed if WR level in any 2 S/Gs is less than 50%.~~ OPEN PORVs and Block Valves

Answer: C

K/A: 000074K307 [4.0/4.4]

Reference: FR-C.1, pages 10 & 17

Objective: OPL271C398

Level: Comprehension

Source: [redacted] 000074K307 001

History: Used on HLC 9807 practice exam
Distracters b and c reordered

Note: **Selected from [redacted] exam bank without modification of text**

No correct answer per FR-C.1 step 21

49. Given the following plant conditions:

- Reactor power is at 20% during a unit shutdown
- Intermediate Range N-36 failed high
- Operators placed the level trip bypass switch for N-36 to the bypass position

Which ONE of the following describes the effect of this failure and action during the remainder of the shutdown?

a. The reactor will automatically trip when the Power Range channels decrease below the P-10 setpoint.

b. Entry from Mode 1 to Mode 2 is prohibited with an inoperable Intermediate Range channel, so the unit must be manually tripped prior to Mode 2 entry.

c. Both Source Range channels, N-31 and N-32, must be manually energized when the operable Intermediate Range channel (N-35) decreases below the P-6 setpoint.

d. Source Range channel N-32 must be manually energized when the operable Intermediate Range channel (N-35) decreases below the P-6 setpoint; Source Range channel N-31 will automatically energize.

Answer: C

K/A: 015000K407 [3.7/3.8]

Reference: AOP-I.01, page 10
ES-0.1, page 13

Objective: OPL271C352, B.4

Level: Comprehension

Source: [redacted] 015000K407 001

History: Not used on 9/97 or 5/98 NRC exams. Not used on practice exam.
Distracters c and d reordered

Note: **Selected from [redacted] exam bank without modification of text**

This question gives answer to question 35

49. Given the following plant conditions:

- Reactor power is at 20% during a unit shutdown
- Intermediate Range N-36 failed high
- ~~Operators placed the level trip bypass switch for N-36 to the bypass position~~

Which ONE of the following describes the effect of this failure and action during the remainder of the shutdown?

a. The reactor will automatically trip when the Power Range channels decrease below the P-10 setpoint.

b. Entry from Mode 1 to Mode 2 is prohibited with an inoperable Intermediate Range channel, so the unit must be manually tripped prior to Mode 2 entry.

c. Both Source Range channels, N-31 and N-32, must be manually energized when the operable Intermediate Range channel (N-35) decreases below the P-6 setpoint.

d. Source Range channel N-32 must be manually energized when the operable Intermediate Range channel (N-35) decreases below the P-6 setpoint; Source Range channel N-31 will automatically energize.

Answer: C

K/A: 015000K407 [3.7/3.8]

Reference: AOP-I.01, page 10
ES-0.1, page 13

Objective: OPL271C352, B.4

Level: Comprehension

Source: [redacted] 015000K407 001

History: Not used on 9/97 or 5/98 NRC exams. Not used on practice exam. Distracters c and d reordered

Note: **Selected from [redacted] exam bank without modification of text**

all operator actions have been performed.

35. Given the following plant conditions:

- Unit 2 is operating at 29% power in accordance with 0-GO-6, Power Reduction From 30% Reactor Power to Hot Standby
- Unit 2 will be going to Cold Shutdown for maintenance
- Intermediate Range N-36 has just failed high

Which ONE of the following actions must be performed before reducing reactor power below 10%?

a. Manually energize N-31 and N-32.

b. Place N-36 Level Trip switch in BYPASS.

c. Remove N-36 instrument power fuses.

d. Manually trip the reactor to prevent an automatic reactor trip.

Answer: B

K/A: 000033K302 [3.6/3.9]

Reference: AOP-I.01, page 10 & 13

Objective: OPL271C352, B.4

Level: Analysis

Source: New question (Developed 7/15/98)

Justification:

a. Incorrect because manually restoring N-31 and N-32 to operation in the power range would destroy the source range detectors.

b. Correct because placing the level trip switch in BYPASS prevents high reactor trip when the low power reactor trip signal is reinstated at the P-10 setpoint (10% power).

c. Incorrect because action does not bypass the trip signal.

d. Incorrect because a manual reactor trip for the given conditions is not required. Placing N-36 level trip switch in BYPASS allows an orderly reactor shutdown.

50. Given the following plant conditions:

- Large Break LOCA is in progress
- RCS pressure is 550 psig
- Exosensor indicates 25°F superheat
- No RCPs are operating

Which ONE of the following indications would the operator use along with RCS pressure to accurately substantiate core cooling?

a. Reactor Coolant Tavg value.

b. Average value of all core exit thermocouples.

c. Hottest Reactor Coolant wide range Thot value.

d. Average value of five hottest core exit thermocouples.

Answer: D

K/A 017000A402 [3.8 / 4.1]

Reference: FR-0, page 3
OPL271C044, page 7, A.1.c

Objective: OPL271C044, B.1.b

Level: Memory

Source: [redacted] 017000A402 001

History: Used on HLC 9809 practice exam
Distracters a, b, c, and d reordered (7/22/98)

Note: **Selected from [redacted] exam bank without modification of text**

50. Given the following plant conditions:

- Large Break LOCA is in progress
- RCS pressure is 550 psig
- Exosensor indicates 25°F superheat
- No RCPs are operating

Which ONE of the following indications would the operator use along with RCS pressure to accurately substantiate core cooling?

a. ~~Reactor Coolant Tavg value.~~ The hottest Tc in each quadrant and 1 Tc near core center

b. Average value of all core exit thermocouples.

c. Hottest Reactor Coolant wide range Thot value.

d. Average value of five hottest core exit thermocouples. ✓

Does not agree with FR-0.2

Answer:	D
K/A	017000A402 [3.8 / 4.1]
Reference:	FR-0, page 3 OPL271C044, page 7, A.1.c
Objective:	OPL271C044, B.1.b
Level:	Memory
Source:	[redacted] 017000A402 001
History:	Used on HLC 9809 practice exam Distracters a, b, c, and d reordered (7/22/98)
Note:	**Selected from [redacted] exam bank without modification of text**

Core Cooling
F-0.2

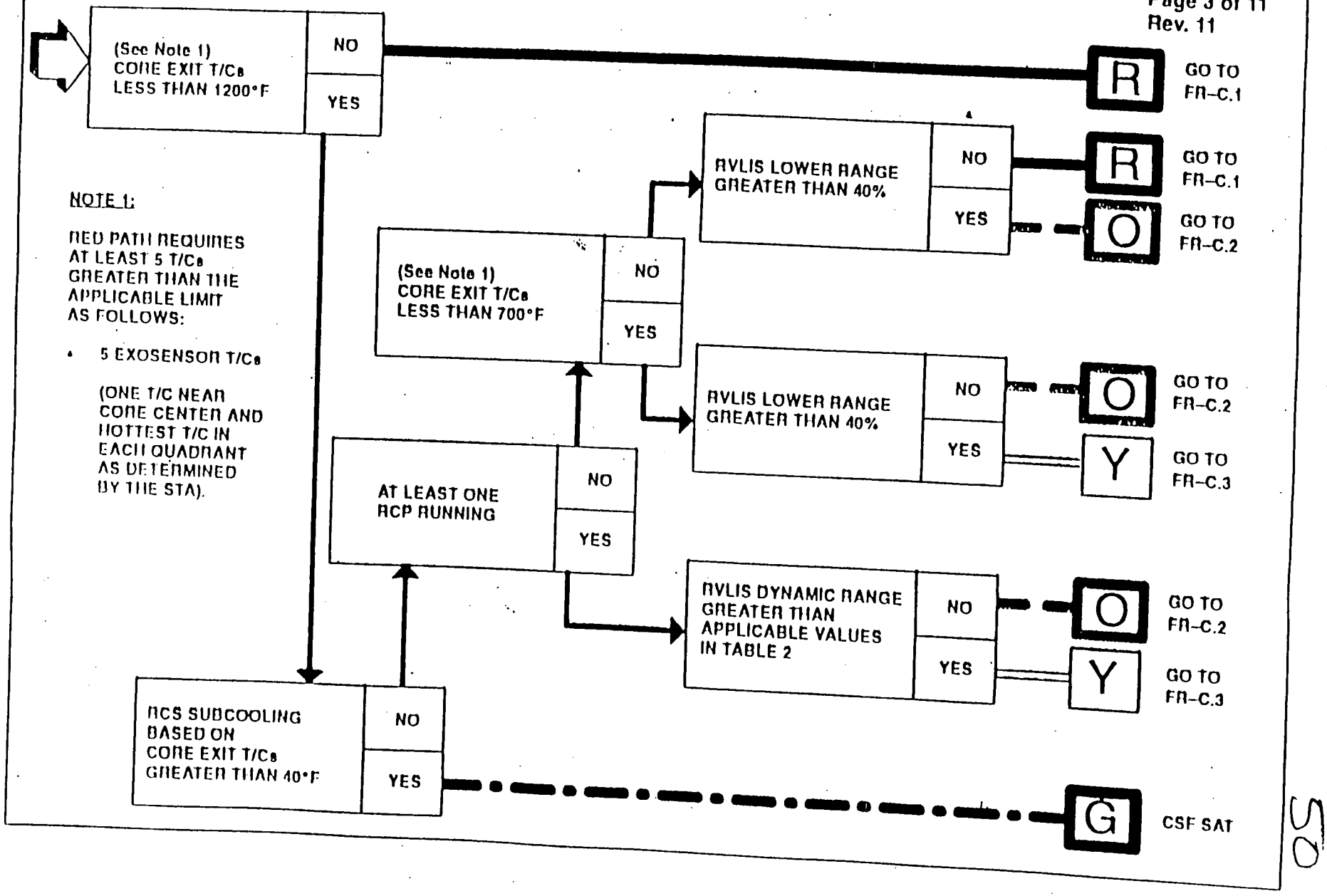

NOTE 1:

RED PATH REQUIRES AT LEAST 5 T/Cs GREATER THAN THE APPLICABLE LIMIT AS FOLLOWS:

- 5 EXOSENSOR T/Cs

  (ONE T/C NEAR CORE CENTER AND HOTTEST T/C IN EACH QUADRANT AS DETERMINED BY THE STA).

50

88. Given the following plant conditions:

- Unit 2 operating in accordance with 0-GO-5, Normal Power Operation at 73% with a power increase to 100% in progress
- Chemistry reports Unit 2 RCS loop 1 accumulator boron concentration is 2390 ppm
- Current time is 0100

Which ONE of the following actions must be taken?

a. Immediately stop the power increase.

b. Continue the power increase while restoring loop 1 accumulator boron concentration to 2400 to 2700 ppm boron within 1 hour.

c. If loop 1 accumulator boron concentration is NOT restored within 1 hour, be in HOT STANDBY by 0700.

d. If loop 1 accumulator boron concentration is NOT restored within 1 hour, reduce pressurizer pressure to 1000 psig or less by 1300.

Answer: A

K/A: 2.1.1 [3.7/3.8]

Reference: SSP-12.1, Page 31

Objective: OPL271C209, B.2

Level: Comprehension

Source: New question (Developed 7/20/98)

Note: Provide copy of Technical Specification 3.5.1.1 with the question (exam)

Justification:

a. Correct because [redacted] Conduct of Operation (SSP-12.1) restricts power increase when in an LCO action of 6 hours or less. RCS loop 1 accumulator boron concentration of 2390 ppm boron places Unit 1 in a 1 hour LCO.

b. Incorrect because power increase is not allowed when in a 1 hour LCO action statement.

c. Incorrect because if loop 1 boron concentration is not restored within 1 hour, the Unit 1 must be in HOT standby by 0800.

d. Incorrect because if loop 1 boron concentration not restored within 1 hour, pressurizer pressure must be reduced to 1000 psig or less by 1400.

3/4.5 EMERGENCY CORE COOLING SYSTEMS

3/4.5.1 ACCUMULATORS

COLD LEG INJECTION ACCUMULATORS

LIMITING CONDITION FOR OPERATION

3.5.1.1 Each cold leg injection accumulator shall be OPERABLE with:

a. The isolation valve open,

b. A contained borated water volume of between 7615 and 8094 gallons of borated water, R131

c. Between 2400 and 2700 ppm of boron,

d. A nitrogen cover-pressure of between 600 and 683 psig, and

e. Power removed from isolation valve when RCS pressure is above 2000 psig. R184

APPLICABILITY: MODES 1, 2 and 3.*

ACTION:

a. With one cold leg injection accumulator inoperable, except as a result of boron concentration not within limits, restore the inoperable accumulator to OPERABLE status within one hour or be in at least HOT STANDBY within the next 6 hours and reduce pressurizer pressure to 1000 psig or less within the following 6 hours.

b. With one cold leg injection accumulator inoperable due to the boron concentration not within limits, restore boron concentration to within limits within 72 hours or be in at least HOT STANDBY within the next 6 hours and reduce pressurizer pressure to 1000 psig or less within the following 6 hours.

*Pressurizer pressure above 1000 psig.

NO CONFLICT KNOWN

88. Given the following plant conditions:

- Unit 2 operating in accordance with 0-GO-5, Normal Power Operation at 73% with a power increase to 100% in progress
- Chemistry reports Unit 2 RCS loop 1 accumulator boron concentration is 2390 ppm
- Current time is 0100

Which ONE of the following actions must be taken?

a. Immediately stop the power increase.

b. Continue the power increase while restoring loop 1 accumulator boron concentration to 2400 to 2700 ppm boron ~~within 1 hour~~. within 72 hours.

c. If loop 1 accumulator boron concentration is NOT restored within 1 hour, be in HOT STANDBY by 0700.

d. If loop 1 accumulator boron concentration is NOT restored within 1 hour, reduce pressurizer pressure to 1000 psig or less by 1300.

Answer: A

K/A: 2.1.1 [3.7/3.8]

Reference: SSP-12.1, Page 31

Objective: OPL271C209, B.2

Level: Comprehension

Source: New question (Developed 7/20/98)

Note: Provide copy of Technical Specification 3.5.1.1 with the question (exam)

Justification:

a. Correct because [redacted] Conduct of Operation (SSP-12.1) restricts power increase when in an LCO action of 6 hours or less. RCS loop 1 accumulator boron concentration of 2390 ppm boron places Unit 1 in a 1 hour LCO.

b. Incorrect because power increase is not allowed when in a 1 hour LCO action statement.

c. Incorrect because if loop 1 boron concentration is not restored within 1 hour, the Unit 1 must be in HOT standby by 0800.

d. Incorrect because if loop 1 boron concentration not restored within 1 hour, pressurizer pressure must be reduced to 1000 psig or less by 1400.

MAKE WRITE Bull 2390 VIA MOTOR READING

006 Emergency Core Cooling System / JPM 136 Recovery From Safety Injection and Solid Water Conditions

Question 2:
Given the following plant conditions:
Unit 2 was operating at 100% power.
The plant experienced a large break LOCA with a failure of the ECCS system.
FR-C.1, "Response to Inadequate Core Cooling," is being implemented.
Core exit TCs are 720°F and increasing.
At this point FR-C.1 directs the crew to depressurize intact steam generators.

a.) What is the basis for the direction in FR-C.1 to depressurize intact steam generators?
b.) Why is this action taken?

References Allowed? YES ___X___ NO _____.

Answer:
a.) To reduce RCS pressure below 125 psig
b.) To allow the ECCS accumulators and RHR pumps to inject water to the RCS.

Reference:
KA: 006G4.18 [2.7 / 3.6] Knowledge of specific bases for EOPs.
OPL271C398 pg 12-15

Applicant Response: SAT ___ UNSAT ___

STEP	ACTION/EXPECTED RESPONSE	RESPONSE NOT OBTAINED

NOTE

- Blocking low steamline pressure SI as soon as pressurizer pressure is less than 1920 psig will prevent an inadvertent MSIV closure and keep the condenser available for steam dump.
- After the low steamline pressure SI signal is blocked, main steamline isolation will occur if the high steam pressure rate is exceeded.
- S/G depressurization at the maximum rate may cause S/G narrow range levels to drop to less than 10% [25% ADV]. This is acceptable and expected for this inadequate core cooling condition.

14. **DEPRESSURIZE** Intact S/Gs to reduce RCS pressure to less than 125 psig:

    a. **WHEN** RCS pressure less than 1920 psig,
    THEN
    PERFORM the following:

    1) **BLOCK** low steamline pressure SI.

    2) **CHECK** STEAMLINE PRESS ISOL/SI BLOCK RATE ISOL ENABLE permissive LIT. [M-4A, A4]

    b. **DUMP** steam to condenser at maximum rate.

    b. **DUMP** steam at maximum rate **USING** Intact S/G atmospheric relief(s).

    IF local control of atmospheric relief(s) is necessary,
    THEN
    DISPATCH personnel to dump steam **USING** EA-1-2, Local Control of S/G PORVs.

(Step continued on next page.)

026 Containment Spray System / JPM # 57AP Respond to High Containment Pressure, Place RHR Spray in Service

Question 2:
Given the following plant conditions:
Unit 1 has tripped from 100% power due to a LOCA.
Containment pressure is 3.0 psid
Transfer of Containment Spray pump suction to the containment sump is being performed in accordance with ES-1.3, Transfer to RHR Containment Sump.

a.) Why must both CS pumps be placed in PULL-TO-Lock while transferring suction to the containment sump?
b.) What does placing both CS pumps in PULL-TO-Lock prevent?

References Allowed? YES ___X___ NO _____.

Answer:
a.) While shifting to the containment sump, both the RWST and the containment sump suction valves to the CS pumps will be closed at the same time.
b.) Placing the CS pumps in PULL-TO-Lock will prevent running a CS pump without a source of water.

Reference:
K/A: 026G4.18 [2.7 / 3.6] Knowledge of specific bases for EOPs
OPL271C024 pg 14-18, CCD NO:1-47W611-72-1, ES-1.3, pages 11-13, OPL271C388 pg 9

Applicant Response: SAT ___ UNSAT ___

A.1: Shift Staffing

Question 1: A licensed RO has been off-shift for 6 months to assist in scheduling an upcoming outage. He had his last physical examination 18 months ago and has had satisfactory performance in the licensed operator requalification training program. He is informed that he is needed to join a shift crew in 3 days to fill in for a vacationing Unit OATC.

Can the RO fill in for the vacationing RO? Why or why not?

References Allowed? YES _X_ NO ___

Answer: No. The RO must first reactivate his license by completing at least 40 hours of "under direction" on-shift time.

Reference: SSP-12.1, Conduct of Operations, p. 61 and 62
K/A 2.1.4 (2.3/3.4)

Applicant Response: SAT ___ UNSAT ___