Monticello Nuclear Generating Plant
2807 W County Road 75
Monticello, MN 55362

October 10, 2014

L-MT-14-084
10 CFR 50.55a(g)

ATTN: Document Control Desk
U.S. Nuclear Regulatory Commission
Washington, DC 20555-0001

Monticello Nuclear Generating Plant
Docket 50-263
Renewed Facility Operating License No. DPR-22

Subject: Response to NRC Request for Additional Information Regarding Relief Request RR-008, For the Fifth Ten-Year Inservice Inspection Interval (TAC No. MF3551)

References: 1) Letter from Northern States Power Company, a Minnesota corporation (NSPM) d/b/a Xcel Energy to Document Control Desk, "10 CFR 50.55a Request RR-008 Associated with the Fifth Ten-Year Inservice Inspection (ISI) Interval", dated February 28, 2014 (ADAMS Accession Number ML14064A191).

2) E-mail from Terry Beltz to Randy Rippy, "Monticello Nuclear Generating Plant - Final Requests for Additional Information re: Request RR-008 (TAC No. MF3551)", dated September 11, 2014 (ADAMS Accession Number ML14258A736).

By letter dated February 28, 2014, Northern States Power Company, a Minnesota corporation (NSPM), d/b/a Xcel Energy requested authorization of a proposed alternative to the requirements of American Society of Mechanical Engineers (ASME) Boiler and Pressure Vessel Code, Section XI, "Rules for Inservice Inspection of Nuclear Power Plant Components," (ASME Section XI), 2007 Edition with the 2008 Addenda, IWB-2420(b), as applied to the flaws in Shroud Support Plate Welds H8 and H9 (Reference 1).

Subsequently, by e-mail dated September 11, 2014, the NRC provided a final Request for Additional Information (RAI) for information required to complete its review (Reference 2).

The formal response to the RAI is provided in the enclosures.

If you have any questions or require additional information, please contact Mr. Randy Rippy at 612-330-6911.

Summary of Commitments

This letter makes no new commitments and no revisions to existing commitments.

Karen D. Fili
Site Vice President, Monticello Nuclear Generating Plant
Northern States Power Company – Minnesota

Enclosures (2)

cc: Administrator, Region III, USNRC
Project Manager, Monticello, USNRC
Resident Inspector, Monticello, USNRC
Minnesota Department of Commerce

ENCLOSURE 1

RESPONSES TO NRC RAIs ON SI CALCULATION 1301525-301 REV.0
STRUCTURAL INTEGRITY ASSOCIATES, INC. ®

SEPTEMBER 30, 2014

13 pages follow

Structural Integrity Associates, Inc.®

5215 Hellyer Ave.
Suite 210
San Jose, CA 95138-1025
Phone: 408-978-8200
Fax: 408-978-8964
www.structint.com
dsommerville@structint.com

September 30, 2014
Report No. 1401152.401.R0
Quality Program: ☒ Nuclear ☐ Commercial

Ms. Wynter McGruder
Xcel Energy
Monticello Nuclear Generating Plant
2807 West County Road 75
Monticello, Minnesota 55362

Subject: Responses to NRC RAIs on SI Calculation 1301525-301, Rev. 0.

References:

1. E-mail FROM: Richard A. Deopere (Xcel) TO: Daniel Sommerville (SI), Jim Wu (SI), Clark Oberembt (SI), DATED: 8/27/2014, SUBJECT: FW: Monticello Nuclear Generating Plant – Draft Requests for Additional Information re: Request. SI File No. 1401152.103.
2. Xcel Energy Contract 00001005, Release 56, 19September2014.
3. SI Calculation 1300180.301, Rev. 2, "Evaluation of Shear Capacity of Monticello Shroud Welds H8 and H9."
4. Chicago Bridge and Iron Drawing 34, Rev. 8, Contract No. 9-5624, "Shroud Support", SI File No. 1300180.205.
5. Beer, F. P., Johnston, E. R., Mechanics of Materials, 2nd Ed., McGraw-Hill, Inc. c. 1992.
6. Young, W. C., Budynas, R. G., Roark's Formulas for Stress and Strain, 7th Ed. McGraw-Hill, Inc. c. 2002.
7. ASME Boiler and Pressure Vessel Code, Section XI, 1995 Edition with Addenda through 1996.
8. ASME Boiler and Pressure Vessel Code, Section II, Part D, 1998 Edition with no Addenda.

Dear Wynter:

Responses to the U.S. Nuclear Regulatory Commission (US NRC) requests for additional information (RAIs) transmitted to Structural Integrity Associates, Inc. (SI) by Xcel Energy personnel [1] are provided below. SI is performing this work under authorization provided in Xcel Energy contract 00001005, Release 56 [2].

NRC RAI #1:

Section 5.1, "Shroud Support Plate Welds H8 and H9," states that, "This evaluation also inherently assumes that all lateral bending moments on the core shroud are supported by the shroud support legs." Based on this assumption, all lateral bending moments on the core shroud will not be transferred to the shroud support plate through Weld H8.

Please provide justification.

Response to NRC RAI #1:

The core support structure is as shown in Figure 1 of 1301525.301, Rev. 0 and is reproduced in RAI #5 response. The design of the core support structure includes two parallel load paths capable of supporting loading from the shroud assembly, shroud head and steam separator assembly, and reactor core. One path is through the shroud support plate. The other path is through the shroud support legs. The proportion of the load that will be supported by the shroud support plate and the shroud support legs can be approximated by modeling the support structure as consisting of two springs in parallel. Then the stiffness of each path and the total stiffness can be calculated. From this calculation the ratio of the shroud support plate stiffness to the total stiffness can be approximated and will show the fraction of the load that is supported by the shroud support plate. Similarly the ratio of the shroud support leg stiffness to the total stiffness can be approximated and will show the fraction of the load that is supported by the shroud support legs.

Method

Solutions for stiffness and displacement/rotations of fixed free beams and an annular plate are taken from References [5, 6]. These solutions are used to determine the ratio of load that is supported by each parallel load path in the core support structure.

Inputs

$a := \frac{17.167 \cdot ft}{2}$	$a = 103.002 \cdot in$	RPV inside radius [3, Section 4]
$b := \frac{159.75}{2} \cdot in$	$b = 79.875 \cdot in$	Shroud inside radius [3, Section 4]
$tp := 2.5 \cdot in$		Shroud support plate thickness [3, Section 4]
$ts := 1.75 \cdot in$		Shroud thickness [3, Section 4]
$L := 53 \cdot in$		Distance between shroud support plate and and H11 [4]

$E := 28 \cdot 10^6 \cdot \frac{lb}{in^2}$

Representative E since the value will cancel out during evaluation of the ratios.

$\frac{b}{a} = 0.775$

Calculate Stiffness for Each Load Path - Bending Moment

Case 1: Fixed-Free Beam [5, Appendix D]

The equation for a rotational spring deflection (See Figure 1) is:

$M = K_\theta 1 \cdot \theta$

Where: K_θ1 is core shroud support legs rotational spring constant
θ is deflection angle

The equation for the rotation at the free end of a fixed-free beam with a pure moment applied to the free end (See Figure 2) is:

$\theta = \frac{-ML}{EI}$ [5, Appendix D, Case 3]

Where: I is the moment of inertia

Combining these two equations give the following expression for the rotational spring constant for the fixed-free beam:

$K_\theta 1 = \frac{M}{\theta} = \frac{M \cdot E \cdot I}{-M \cdot L} = \frac{-E \cdot I}{L}$

The moment of inertia of the shroud support legs is:

$I = \pi \cdot \frac{\left[(R_o)^4 - (R_i)^4\right]}{4}$

Where: Ro is the outer radius of the shroud
Ri is the inner radius of the shroud

However, the shroud support legs do not form a continuous cylinder but are segmented to allow for flow. The total loss of area is approximately 80% of the cross section, based on the support leg width of 7 inches and 14 total legs. Therefore, the moment of inertia of the shroud support legs is rewritten as:

$$I = 0.2\pi \cdot \frac{\left[(R_o)^4 - (R_i)^4\right]}{4}$$

Note that the 14 shroud support legs are not evenly distributed. However, the intent of this evaluation is to provide justification for the assumption that lateral bending moments on the core shroud may be ignored in the evaluation Weld H8. It is not the intent of this simplified hand calculation to determine the exact portion of loading that is transmitted through both H8 and H10.

Introducing the equation for the moment of inertia into the spring constant equation above and using the parameter b to refer to Ri and b+ts to refer to Ro, gives:

$$K_\theta 1 := \frac{E \cdot 0.2\pi \cdot \left[(b + ts)^4 - b^4\right]}{4 \cdot L} \qquad K_\theta 1 = 3.059 \times 10^{11} \cdot in \cdot lb$$

Where: b is the inside radius of the shroud
ts is the shroud thickness

Case 2: Fixed-Guided Annular Ring [6, Table 11.2, Case 21b]

The equation for the rotation at the inside of an annular ring fixed on the outside and connected to a trunnion on the inside, with a pure moment applied to the trunnion (See Figure 3) is:

$$\theta = \frac{\alpha \cdot M}{E \cdot t^3}$$ [6, Table 11.2, Case 21b]

α is calculated by interpolating the values given in [6, Table 11.2, Case 21b] for the b/a applicable to the Monticello Nuclear Generating Plant (MNGP) shroud support plate.

$\alpha = 0.0055$

Thus, using the same equation for rotational spring constant (See Figure 4):

$M = K_\theta 2 \cdot \theta$ K_θ2 is the shroud support plate rotational spring constant

and,

$$\theta = \frac{\alpha \cdot M}{E \cdot t^3}$$

So,

$$K_\theta 2 = \frac{M}{\theta} = \frac{M \cdot E \cdot t^3}{\alpha \cdot M} = \frac{E \cdot t^3}{\alpha}$$

$$K_\theta 2 := \frac{E \cdot tp^3}{0.0055} \qquad K_\theta 2 = 7.955 \times 10^{10} \cdot in \cdot lb$$

Total Spring Constant

The total spring constant at the base of the shroud, considering rotational deflection caused by a pure moment, and the two parallel load paths is:

$$K_\theta t := K_\theta 1 + K_\theta 2 \qquad K_\theta t = 3.854 \times 10^{11} \cdot in \cdot lb$$

Proportion of each load path stiffness to total:

Shroud support legs: $\frac{K_\theta 1}{K_\theta t} = 0.794$

Shroud support plate: $\frac{K_\theta 2}{K_\theta t} = 0.206$

The shroud support legs are significantly stiffer than the shroud support plate. This results in the shroud support legs supporting an estimated 80% of the load. Thus, the assumption that the shroud support plate does not support the moments acting on the core shroud assembly is justifiable.

Calculate Stiffness for Each Load Path - Axial Force

Case 1: Fixed-Free Beam

The equation for an axial spring deflection is:

$$P = K_x1 \cdot X$$

The equation for the axial deflection of a fixed-free beam with a pure axial load applied to the free end is:

$$X = \frac{P \cdot L}{A \cdot E}$$

Combining these two equations give the following expression for the axial stiffness of a fixed-free beam:

$$K_X1 = \frac{P}{X} = \frac{P \cdot A \cdot E}{P \cdot L} = \frac{A \cdot E}{L}$$

As stated above, the shroud support legs do not form a continuous cylinder. The equation for the reduced cross-sectional area of the shroud is:

$A = 0.2 \cdot 2\pi \cdot b \cdot ts$

Where: b is the inner radius of the shroud
ts is the wall thickness of the shroud

Thus:

$A := 0.2 \cdot 2\pi \cdot b \cdot ts$ $\qquad A = 175.654 \cdot in^2$

$K_xl := \frac{A \cdot E}{L}$ $\qquad K_xl = 9.28 \times 10^7 \cdot \frac{lb}{in}$

<u>Case 2: Fixed-Guided Annular Ring [6, Table 11.2, Case 1f]</u>

The equation for the displacement at the inside of an annular ring fixed on the outside and connected to a trunnion on the inside, with a pure axial load applied to the trunnion (See Figure 5) is:

$X = K_yb \cdot \frac{w \cdot a^3}{D}$ [6, Table 11.2, Case 1f]

Where: $w = \frac{P}{2 \cdot \pi \cdot b}$

$D = \frac{E \cdot tp^3}{12 \cdot \left(1 - \upsilon^2\right)}$ $\qquad \upsilon := 0.3$ Typical Poisson's ratio assumed

K_yb is calculated by interpolating the values given in [6, Table 11.2, Case 1f] for the b/a applicable to the MNGP shroud support plate.

$K_yb = 0.001225$

Thus,

$P = K_X2 \cdot X$

and,

$X = K_yb \cdot \frac{w \cdot a^3}{D}$

So,

$$K_X2 = \frac{P}{X} = \frac{P}{K_yb \cdot \frac{w \cdot a^3}{D}} = \frac{P}{0.001225 \cdot \frac{\frac{P}{2 \cdot \pi \cdot b} \cdot a^3}{\frac{E \cdot tp^3}{12 \cdot (1 - \upsilon^2)}}} = \frac{2 \cdot \pi \cdot b \cdot E \cdot tp^3}{0.001225 \cdot 12 \cdot a^3 \cdot (1 - \upsilon^2)}$$

$$K_x2 := \frac{2 \cdot \pi \cdot b\, E \cdot tp^3}{0.001225 \cdot a^3 \cdot 12 \cdot (1 - 0.3^2)} \qquad K_x2 = 1.502 \times 10^7 \cdot \frac{lb}{in}$$

Total Spring Constant

$$K_xt := K_x1 + K_x2 \qquad K_xt = 1.078 \times 10^8 \cdot \frac{lb}{in}$$

Proportion of each load path stiffness to total:

Shroud support legs: $\frac{K_x1}{K_xt} = 0.861$

Shroud support plate: $\frac{K_x2}{K_xt} = 0.139$

The shroud support legs are significantly stiffer than the shroud support plate. This results in the shroud support legs supporting approximately 86% of the load. Thus, the assumption that the shroud support plate does not support the axial loads acting on the core shroud assembly is justifiable.

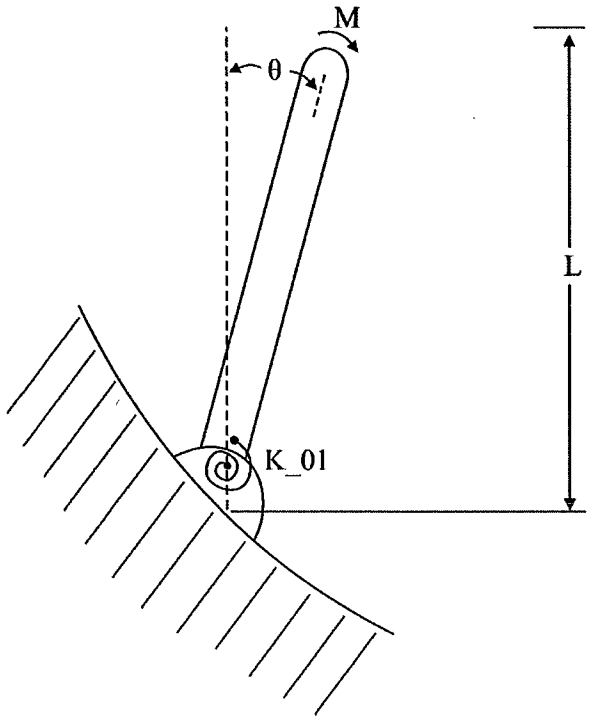

Figure 1: Shroud Support Leg Free Body Diagram, Rotational Spring

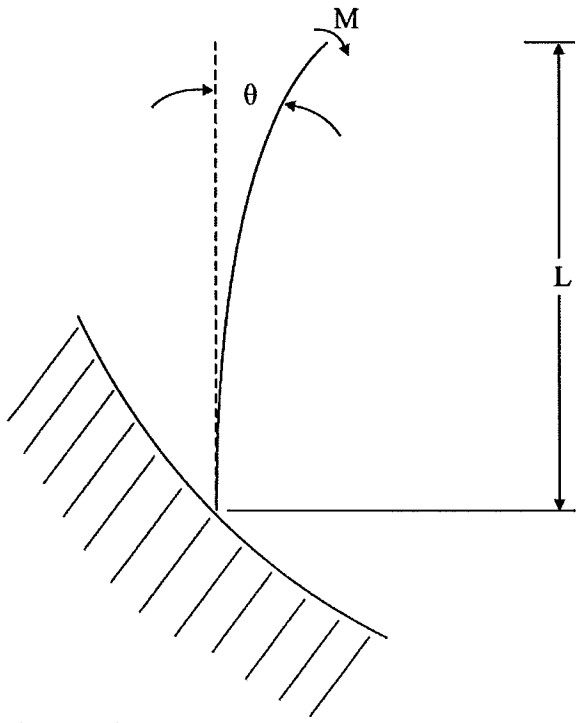

Figure 2: Shroud Support Leg Free Body Diagram, Fixed-Free Beam

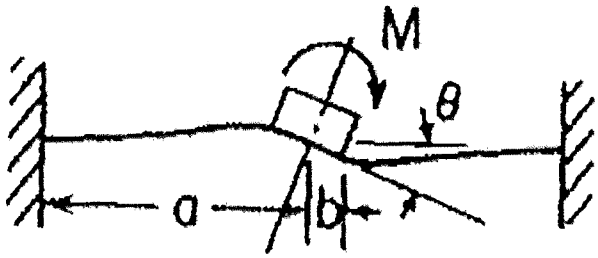

Figure 3: Annular Ring, Rotation

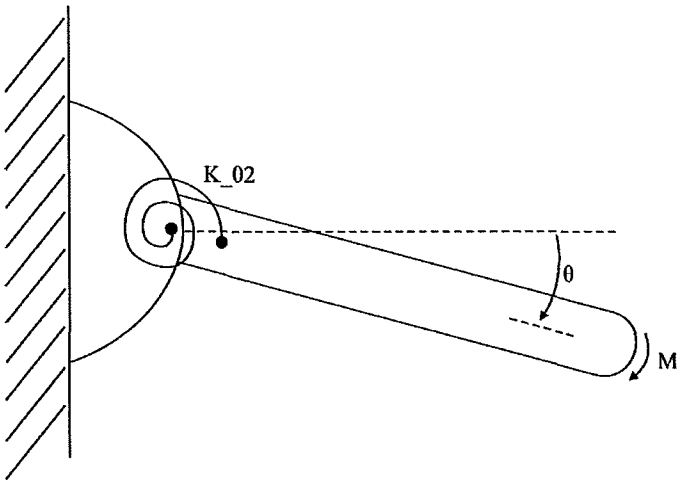

Figure 4: Shroud Support Plate Free Body Diagram, Rotational Spring

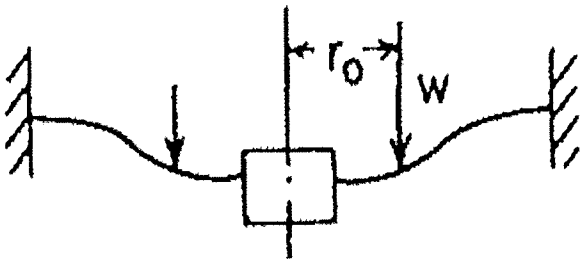

Figure 5: Annular Ring, Axial Force

NRC RAI #2:

Section 5.1.1 regarding the H8/H9 evaluation following the 2011 inspections states that, "Since the most significant loads are the vertical seismic loads and the reactor internal pressure difference (RIPD) across the support plate, the loading in the H8 and H9 welds was assumed to be in pure shear." It appears that the vertical seismic loads (due to core shroud, coolant, jet pumps, etc.) and the RIPD across the support plate would create net moment, not just pure shear, at the H8 and H9 locations.

Please revise your analysis by considering loading due to both moment and shear, unless there is additional justification to support that loading due to the moment creates negligible stresses at the H8 and H9 locations.

Response to NRC RAI #2:

The shroud support legs are much stiffer than the shroud support plate when a vertical load is applied; therefore, the shroud support legs will support the majority of the load. This observation is the basis for not applying axial loads from RIPD and seismic on the shroud assembly and core to the shroud support plate. Please see the response to RAI #1 for the basis for this response.

NRC RAI #3:

Section 5.1.1 further states that, "Based on the maximum shear stress failure theory, the shear flow stress was taken as one-half the tensile flow stress of the Alloy 600 base material. Therefore, the shear flow stress is 34.95 ksi [2]."

To avoid the need for providing Reference 2, please justify the use of a tensile flow stress of 69.9 ksi in the application.

Response to NRC RAI #3:

The flow stress used in the evaluation is based on the following:
$\sigma_f = 3Sm$ [7, Appendix C]

Where Sm=23.3 ksi [8, Table 2B] is the ASME B&PV Section II design stress intensity for Alloy 600 material taken at 550 °F (See Table 5b). This definition of the flow stress of a material is consistent with the methods used in the applicable BWRVIP inspection and evaluation guidelines for the BWR internals. Material properties are taken at 550 °F in order to bound the operating temperatures applicable to the BWR and obtain a lower bound determination of the flow stress of the material. Note that References [7] and [8] are the ASME Code Editions cited in Reference [2] of the SI Calculation 1301525-301, Revision 0.

NRC RAI #4:

Section 5.1.2 regarding the H8/H9 evaluation following the 2013 inspections states that, "The results indicate that sufficient structural margin for Case 1 was available with only 18% of the topside weld material being intact with a remaining ligament of 1/2 the wall thickness."

The corresponding evaluation results for Case 1 that are provided in Table 5 do not seem to support 18%. Please elaborate.

Response to NRC RAI #4:

Row 1 of Table 5 gives an end of evaluation interval remaining ligament length of 86.88 inches.

A total of 17.52 inches of stress corrosion crack (SCC) growth was considered in the flaw evaluation. This is based on the assumption that there are 10 uninspected regions, each of which are cracked along 100% of the uninspected region length and 100% through the shroud support plate weld, and each with active SCC growth occurring during the entire 2 year evaluation interval. Thus, the end of interval assumption for crack growth is:

$$10\ regions \times 2\ crack\ tips / region \times 5E-5in / hr \times 2\ years \times 365\ days / yr \times 24\ hrs / day = 17.52\ inches$$

The ligament required at the beginning of the operating interval is then the end of evaluation interval ligament length from Row 1 of Table 5 plus the postulated crack growth:

$$86.88\ in. + 17.52\ in. = 104.4\ in.$$

The average weld length for the H8 and H9 welds is given in SI Calculation 1300180.301, Rev. 2 as 580.02 inches.

Finally, the % of the weld length required to be intact at the beginning of the operating interval is:

$$\frac{86.88\ in. + 17.52\ in}{580.02\ in.} \times 100 = 18\%$$

NRC RAI #5:

Section 5.2.1 regarding the H10 evaluation following the 2011 inspections states that, "It should be noted that the shear term in the calculation of P_b was conservatively taken to the bottom of the shroud support legs (weld H11) versus weld H10. This is consistent with the BWRVIP-38 methodology."

Section 5.2.2 regarding the H10 evaluation following the 2013 inspections states that, "To remove excess conservatism, the shear term moment arm in the calculation of P_b was reduced from the distance to the bottom of the shroud support legs (weld H11) to the H10 weld location."

Please justify your current P_b calculation, as it is not obvious that the BWRVIP-38 approach on the shear arm is unnecessarily conservative.

Response to NRC RAI #5:

In order to determine a bending stress applicable to the H10 weld location, bending stresses at the H7 location must be adjusted to the H10 location. The adjustment is made by first taking the shear load acting at H7 and multiplying it by the moment arm between H7 and H10. This moment loading is converted to a bending stress and then added to the H7 bending stress.

Figure 1 of 1301525.301, Rev. 0 is excerpted below in order to illustrate the location of the H7, H10, and H11 welds as well as the applicable moment arms. Since the moment arm between the H7 and H10 welds is smaller than the moment arm between the H7 and H11 locations, it is unnecessarily conservative to add the additional moment contributed by the length of shroud support leg below the H10 weld.

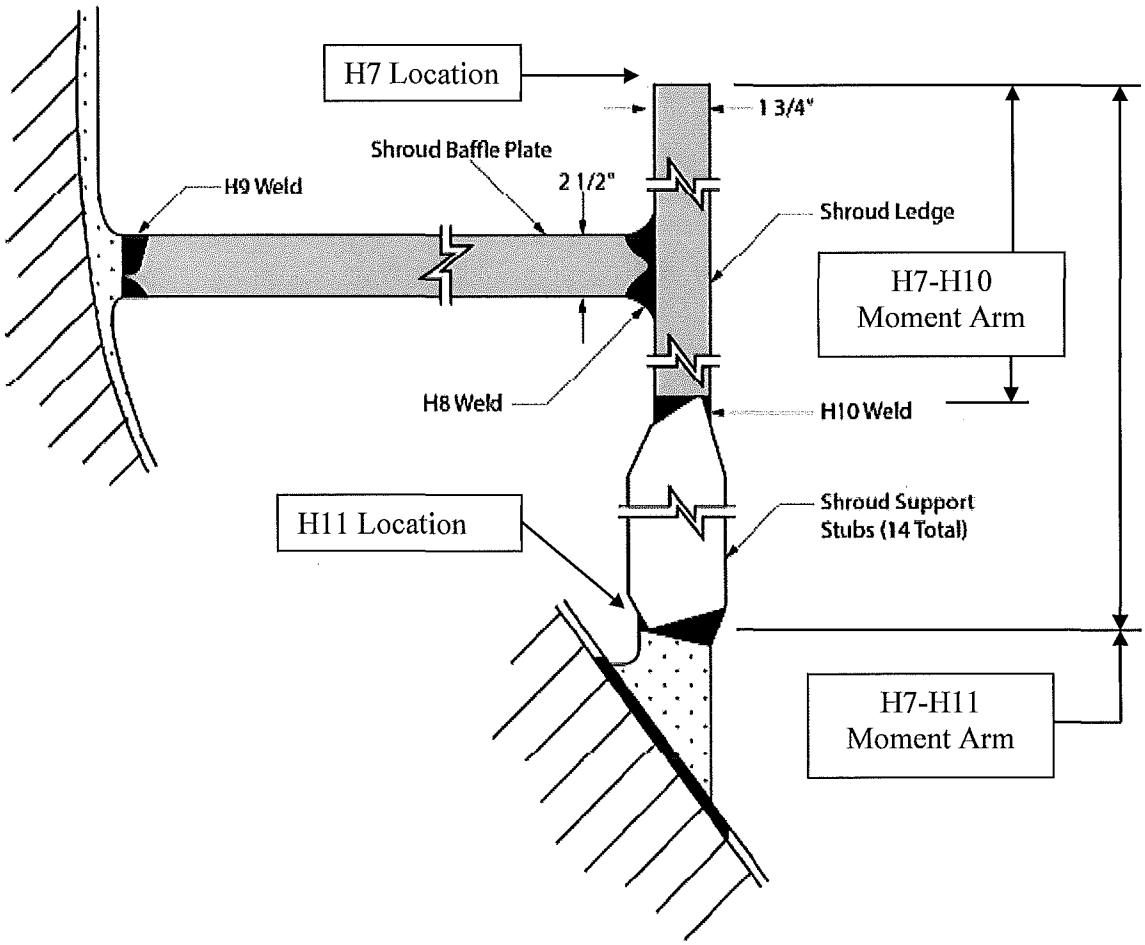

Figure 1. General Vessel Shroud Support Structure Attachment Configuration

NRC RAI #6:

Section 5.3 regarding applied conservatisms states under Item 4 that, "In order to ensure that the findings in SC 12-20 would not affect the Reference [4] evaluation after it was issued, the RLB AC [recirculation line break Acoustic] loads were conservatively doubled in the evaluation. This was not necessary, as the AC vertical load of 2,220 kips is identical to what was developed by evaluating the AC RIPD due to depressurization of the annulus region in Reference [2]. Since the MOC code was not used to develop this load, SC 12-20 would not apply."

Please provide justification for not including the RLB AC loads in the current analysis, and explain how Reference 4 considered the RLB AC loads in its evaluation of Welds H8 and H9.

Response to NRC RAI #6:

Recirculation line break acoustic loads were considered in the most recent structural evaluations of the shroud support plate performed in 2013 and those performed in 1301525.301 Rev. 0.

The discussion included in Item 4 of Section 5.3 is attempting to communicate that, for the structural evaluation documented in 1301525.301, Rev. 0 Reference [4], a conservative assumption was made that an error documented in the DRAFT General Electric Safety Communication (GE SC) 12-20 affected the recirculation line break acoustic loads used for the MNGP evaluation. This assumption was specifically taken because, at the time the evaluation in Reference [4] of 1301525.301, Rev. 0 was performed insufficient documentation was available from the vendor that had calculated the AC load to conclusively determine whether that error affected the AC load considered in the H8/H9 evaluation for MNGP. SI personnel independently verified that the AC load acting on the shroud support plate was not affected by the error identified in DRAFT GE SC 12-20. Consequently, increasing the AC load by a factor of 2 was un-necessary.

Prepared by:		Verified by:	
Daniel Sommerville, P.E. Associate	9/30/2014 Date	Jim Wu Consultant	9/30/2014 Date

Approved by:

Daniel Sommerville, P.E. Associate	9/30/2014 Date

ENCLOSURE 2

MONTICELLO NUCLEAR GENERATING PLANT
RESPONSE TO NRC REQUEST FOR ADDITIONAL INFORMATION
ISI 10 CFR 50.55a REQUEST RR-008

NRC RAI-7:

Although Weld H10 in core shroud support legs is not listed as components for the relief request, the structural integrity of Weld 10 will affect Welds H8 and H9 significantly. The proposed alternative in RR-008 for the Welds H8 and H9 inspection will cover some limited areas of these welds to validate the analytical evaluations documented in Section 5.1 of Enclosure 2, and to take actions if the inspection shows unexpected results.

Please discuss what inspection will be performed on H10 in the next 8 years to confirm the H10 evaluations documented in Section 5.2 of Enclosure 2.

Response to NRC RAI-7:

The H10 welds on the core support legs will be re-examined using the visual VT-3 method according to the successive inspection requirement specified in American Society of Mechanical Engineers (ASME) Code, Section XI, IWB-2420(b).

The remaining re-exams in the 5th 10-year Interval will be performed in Period 2 and Period 3. The re-exams for Period 1 were completed in in 2013.