June 30, 2014

L-2014-206
10 CFR 50.4
10 CFR 50.55a

U. S. Nuclear Regulatory Commission
Attn: Document Control Desk
Washington, DC 20555

Re: St. Lucie Unit 2
Docket No. 50-389
Inservice Inspection Plan
Third Ten-Year Interval Unit 2 Relief Request No. 14

In accordance with 10 CFR50.55a(g)(5)(iii), inservice inspection impracticality, Florida Power & Light (FPL) requests relief from the examination requirements of the ASME Code, Section XI, 1998 Edition with Addenda through 2000, for the subject CEDM welds. The basis for the relief request is provided in the Attachment.

Please contact Ken Frehafer at (772) 467-7748 if there are any questions about this submittal.

Sincerely,

ES Katzman

Eric S. Katzman
Licensing Manager
St. Lucie Plant

Attachment

ESK/KWF

A047
NRR

St. Lucie Unit 2
THIRD INSPECTION INTERVAL
RELIEF REQUEST NUMBER 14, REVISION 0

Relief Request
In Accordance with 10 CFR50.55a(g)(5)(iii)

--Inservice Inspection Impracticality--

1. ASME Code Component(s) Affected

Class 1, Category B-O, Item #B14.10, Pressure Retaining Welds in Control Rod Housings.

2. Applicable Code Edition and Addenda

The Code of record for St. Lucie Unit 2 (PSL-2) is the 1998 Edition with 2000 Addenda of the ASME Boiler and Pressure Vessel Code, Section XI, "Rules for Inservice Inspection of Nuclear Power Plant Components" as modified by 10CFR50.55a.

3. Applicable Code Requirement

Exam Cat.	Item No.	Examination Requirements
B-O	B14.10	volumetric or surface examination of 10% peripheral CRD housing welds

IWB-2412(b)(2)- When items or welds are added during the second period of an interval, at least 25% of the examinations required by the applicable Examination Category and Item Number for the added items or welds shall be performed during the third period of the interval.

4. Impracticality of Compliance

- Removal and disassembly of the CEDM Coil Stack Assembly and Seismic Shroud Assembly Seismic Shroud Assembly to facilitate examination is not possible without significant work, significant radiation exposure, and/or potential damage to the plant.

- Due to the configuration of the control rod drives, it is not practical to meet the examination requirements of the ASME Code, Section XI, 1998 with addenda through 2000. Relief is requested in accordance with 10 CFR 50.55a(g)(5)(iii).

- When a component has conditions which make it impractical to perform the examination required by the code of record, Florida Power and Light is required to submit the information to the enforcement and regulatory authorities having jurisdiction at the plant site. This Relief Request has been written to address welds that are inaccessible for examination and disassembly to facilitate examination is impractical.

- The PSL-2 replacement reactor vessel head contains ninety-one (91) control element drive mechanisms (CEDM). Each of the thirty-two (32) periphery

replacement CEDM pressure housing assemblies contain 5 full penetration butt welds that require a surface or volumetric examination. It is not possible to perform the surface or volumetric examinations of 4 of these welds in CEDM housings without significant reactor vessel head disassembly. The 2 upper welds (CEDM 1 & 2) and 2 motor housing welds (CEDM 3 & 4) are covered by the shroud assembly which provides seismic support and houses the sensitive rod position indicator coils. The shroud assembly also serves as the support for the CEDM coil stack assembly. Only the lower weld (CEDM 5) is accessible for examination.

- Direct Access to the CEDM 1 – 4 welds is not obtainable without extensive disassembly of the CEDM Coil Stack Assembly (drive motor coils) and Seismic Shroud Assembly.

Component Description and Function

The internal mechanisms of the CEDM are magnetic jack drives (latch mechanisms) used to vertically position the control element assemblies (CEA) in the core. Each CEDM is capable of withdrawing, inserting, holding, and tripping the CEA from any point within its travel in response to operating signals. Each CEDM is connected to its associated CEA by an extension shaft. Each CEDM housing is surrounded by a seismic shroud on the outside, designed to limit horizontal movement. The seismic shroud completely covers CEDM welds 1 & 2.

Each CEDM has a coil stack assembly, which consists of electromagnetic coils mounted on the outside of the CEDM motor housing assembly. The coils supply magnetic force to actuate the mechanical latches utilized in engaging and driving the notched drive shaft. The electromagnetic coils of the coil stack assembly completely cover CEDM welds 3 & 4.

A reed switch position transmitter (RSPT) assembly is positioned so as to utilize the permanent magnet in the top of each extension shaft. The permanent magnet actuates the reed switches one at a time as it passes by them. This signal, which gives the position of the CEA, is transmitted by the RSPT via cabling. The RSPT is contained in the seismic shroud.

Below are illustrations and descriptions of the key components to show the level of effort required to gain access to CEDM 1-4 welds.

St. Lucie Unit 2
THIRD INSPECTION INTERVAL
RELIEF REQUEST NUMBER 14, REVISION 0

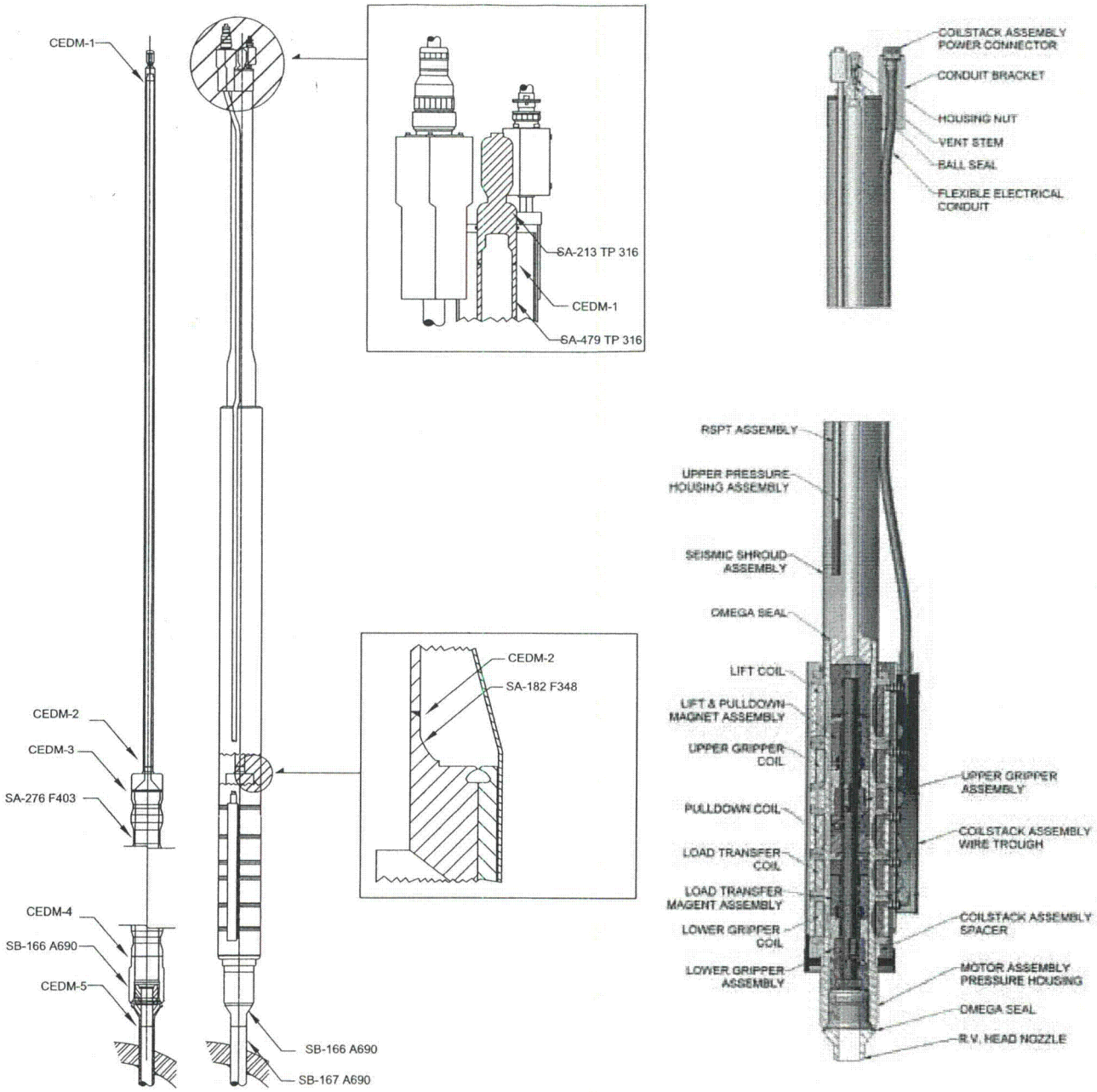

- **Upper Pressure Housing Assembly –**

The upper pressure housing assembly forms the upper portion of the pressure boundary and is designed and built to the ASME Boiler and Pressure Vessel Code Section III requirements for Class 1 Appurtenance for 2500 psia and 650°F. The height of the upper pressure housing is designed to allow for the complete withdrawal of the extension shaft assembly without striking the top closure plug. This is accomplished by providing clearance between the top of the pressure housing and the top of the extension shaft assembly when the latch (latch (gripper))s are engaged with the lowest lobe on the drive shaft. The upper end of the housing is designed to allow venting (if required) of the mechanism after filling the system and prior to a hydrostatic test or system operation. The seal utilizes a 440 stainless steel ball seating on a 316 stainless steel seat. A housing nut is installed to act as a closure plug. The housing nut has an Omega seal that can be welded in the event of seat leakage through the mechanical seal or the EPR O-Ring.

St. Lucie Unit 2
THIRD INSPECTION INTERVAL
RELIEF REQUEST NUMBER 14, REVISION 0

- **Seismic Shroud Assembly -** A stainless steel shroud extends from the top of the coil stack assembly to the top of the upper pressure housing. The shroud acts as a lift rig for the removal and installation of the coil stack from the upper end of the mechanism. Two shoulder eyebolts are installed in the top plate of this assembly to facilitate removal. The shroud is bolted to the coil stack.

- **Cooling Shroud Assembly** - The coil stack is surrounded by a sheet metal cooling shroud producing an annulus through which air can flow through. Air flowing from top to bottom of the coil stack will remove operating coil heat and some internal CEDM heat to maintain the coils at a temperature of less than 350°. The cooling shroud, an integral part of the CEDM, seals its lower end against the plenum flow plate by a spring-loaded rubber collar.

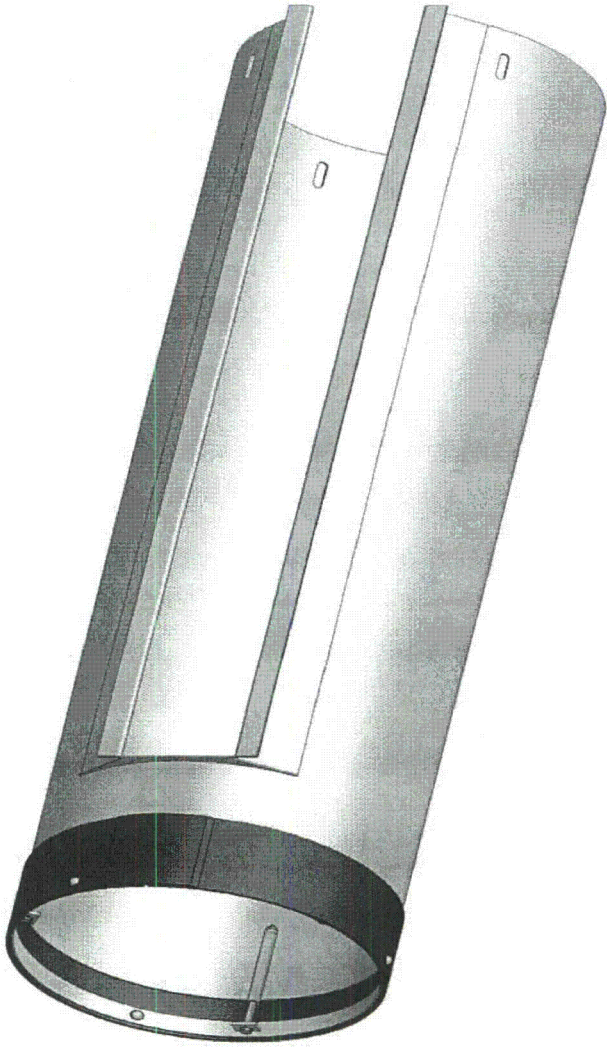

St. Lucie Unit 2
THIRD INSPECTION INTERVAL
RELIEF REQUEST NUMBER 14, REVISION 0

- **The CEDM Motor Housing Assembly** - The motor housing assembly is designed and built to the ASME Boiler and Pressure Vessel Code Section III requirements for Class 1 Appurtenances operating at 2500 psia and 650ºF. The motor housing along with the upper pressure housing are NPT stamped as an assembly. The motor housing assembly contains the motor assembly and forms the lower portion of the CEDM pressure boundary. The motor housing assembly is fabricated from Type 403 stainless steel with upper end fittings of 348 stainless steel and lower end fittings of Alloy 690. The 403 stainless steel section is required for both its magnetic and strength properties. A lower ledge supports and positions the coil stack assembly and the shroud assembly. The end fittings use Acme threads for strength and Omega seals to provide the water pressure boundary.

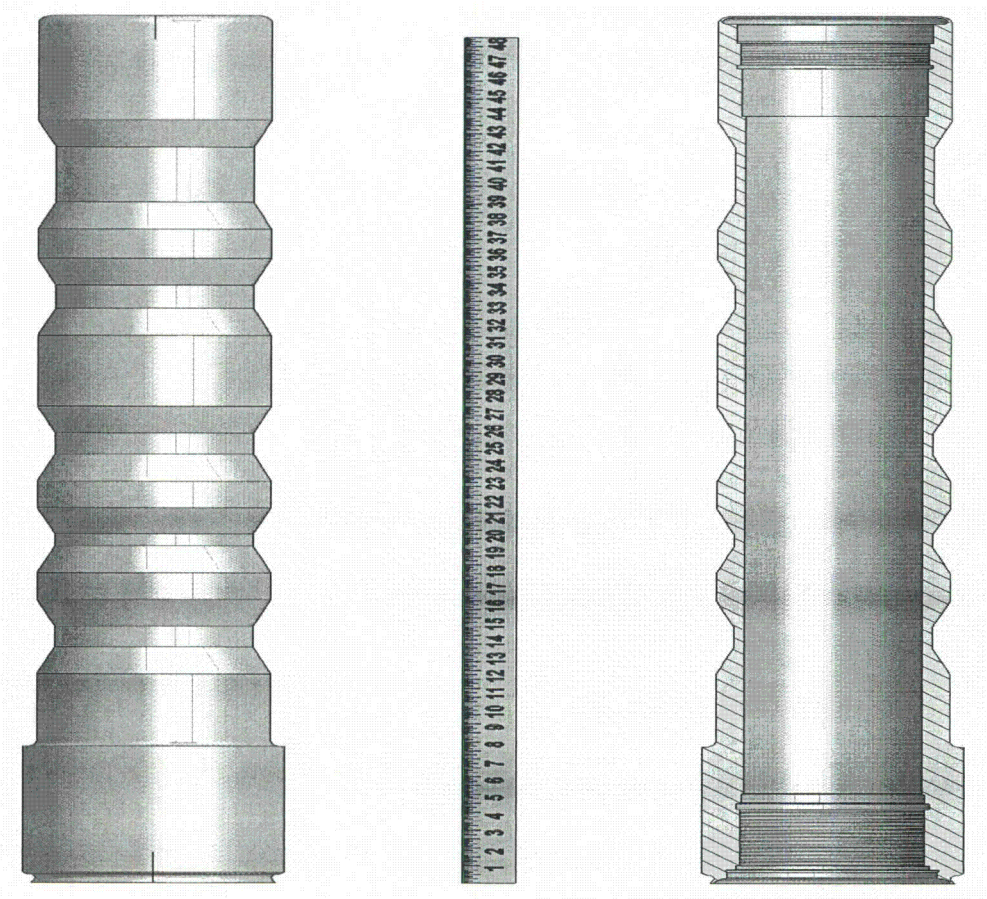

5. Burden Caused by Compliance

- Unlike piping weld inspections that only require insulation removal, inspection of CEDM welds 1 through 4 requires significant disassembly of permanent plant equipment

- Direct Access to the CEDM 1 – 4 welds is not obtainable without extensive disassembly of the CEDM Coil Stack Assembly and Seismic Shroud Assembly that covers the CEDM pressure and motor housings. These activities would be considered a High Risk since they involve disassembly of sensitive electrical components that position control rods that function to control reactivity and also have a safe shutdown function. There is also the risk of damage to components during disassembly and restoration as well as alignment and post maintenance testing that could severely impact the plant with an extended off-line condition to properly obtain long lead replacement parts, if required.

- Access inside the Reactor Vessel Head (RVH) service structure that surrounds all 91 CEDMs and acts as part of the seismic supported RVH duct work, is required to perform inspections on CEDM welds 2, 3 & 4. To gain access to these welds would require service structure modifications, a significant level of service structure disassembly or removal entirely. Any modification would be a significant level of effort as the service structure is an engineered structure.

- Removal and reinstallation of the CEDM coil stacks and sensitive control rod position indicators would also require post maintenance testing (PMT) that could not be performed until reactor vessel reassembly. Although testing of the CEDM assembly is a normal part of start up testing, the possibility of a PMT failure is increased as a result of handling these sensitive components.

6. Proposed Alternative and Basis for Use

Proposed Alternative

The subject welds will continue to receive VT-2 examination with the Reactor Coolant Pressure Boundary (RCPB) system leakage test conducted prior to startup from each refueling outage.

Because the replacement head was installed during the 2nd period of the 3rd ISI interval, FPL performed examinations of the lower weld (CEDM 5) on 2 accessible periphery CRD housings during the 3rd period to satisfy the IWB-2412(b)(2) requirement.

The lower weld (CEDM 5) of 2 CEDM periphery penetrations were examined in accordance with the code requirements of the 1998 Edition with Addenda through 2000. For the remaining welds in each CEDM assembly, the configuration completely precluded accessibility for examination.

St. Lucie Unit 2
THIRD INSPECTION INTERVAL
RELIEF REQUEST NUMBER 14, REVISION 0

Basis for Use

10 CFR 50.55a(g)(4) recognizes that throughout the service life of a nuclear power facility, components which are classified as ASME Code Class 1, Class 2, and Class 3 must meet the requirements set forth in the ASME Code to the extent practical within the limitations of design, geometry and materials of construction of the components.

FPL replaced the complete Reactor Vessel Head (RVH) assembly including CEDMs during the SL2-17 (2007) refueling outage. The purpose of the replacement of the component was to replace those materials that have been proven to have high susceptibility to primary water stress corrosion cracking (PWSCC). Replacement of the RV head and CEDMs provided all new material and components that form the RCS pressure boundary.

The replacement motor housing assembly welds (CEDM 3 & 4) use a modern narrow groove weld joint geometry so that less weld material is present. The replacement weld joint designs are in compliance with the design, fabrication, inspection, and testing requirements of the ASME B&PV Code, Section III, 1998 Edition through the 2000 Addenda for Class 1 appurtenances.

The replacement occurred during the 2nd period of the 3rd ISI interval for PSL-2. The PSL-2 replacement reactor vessel head contains ninety-one (91) control element drive (CEDM) mechanisms. The periphery consists of thirty-two (32) CEDMs. Prior to assembly, preservice surface examinations of all 5 welds on the thirty-two (32) periphery CEDMs was performed. In addition a volumetric preservice examination was performed of the CEDM welds prior to the assembly utilizing equipment, procedures, and personnel qualified in accordance with ASME Section XI, Appendix VIII. No indications were identified.

Combustion Engineering designed latch driven CEDMs with butt welds have had excellent service performance history. A review of operational experience in the INPO database did not identify failures of CEDM butt welds of the design described above. Although some failures were noted in the thin ligament specially designed seal welds (NB-4360) that are used on the threaded joints, they do not receive the same level of NDE that the affected CEDM butt welds receive. In addition the seal welds have a unique configuration of trapped or occluded water chemistry that is not applicable to the conditions that the CEDM butt weld RCS environment.

Because the replacement head was installed during the 2nd period of the 3rd ISI interval, FPL performed surface examinations of the lower weld (CEDM 5) on 2 accessible periphery CRD housings during the 3rd period to satisfy the IWB-2412(b)(2) requirement.

FPL performed examinations of the accessible welds. Personnel and system engineers perform walk downs of the reactor head after shutdown and during startup looking for leakage or other abnormal conditions.

Therefore, examination of the accessible welds (CEDM 5) on the periphery CEDMs combined with the periodic system leakage tests provides an acceptable level of qualify and safety for identifying degradation.

7. Duration of Proposed Alternative

This relief request is applicable to the St. Lucie unit 2 Third Inservice Inspection Interval which began August 8, 2003 and ended August 7, 2013.