uraniumone™
investing in our energy

June 28, 2014

Mr. Andrew Persinko, Deputy Director
Decommissioning & Uranium Recovery Licensing Directorate
Division of Waste Management & Environmental Protection
Office of Federal & State Materials & Environmental Management Programs
U.S. Nuclear Regulatory Commission
11545 Rockville Pike
Mail Stop T7-E18
Rockville, Maryland 20852-2738

Re:
License Amendment Request – Re-drying Honeymoon Dried Yellowcake – RAI Response Package
Uranium One USA, Inc.
Materials License No. SUA-1341
Docket No. 40-8502 – TAC No. J00721

Dear Mr. Persinko:

Uranium One USA, Inc. (Uranium One), submitted on February 28, 2014 a License Amendment request to SUA–1341 for the re-drying of yellowcake from the Honeymoon Project in Australia owned by Uranium One Australia Pty Ltd at its Willow Creek Irigaray facility. Additional information requested in a meeting with NRC staff on March 13, 2014 was provided to NRC on March 27, 2014. On June 10, 2014, NRC staff found the amendment request acceptable for review and requested additional information (RAI) in order to complete their review.

Uranium One is providing with this correspondence, responses to the eight (8) RAI's provided in the June 10, 2014 letter. For each RAI response, Uranium One has repeated the NRC's Licensee's Statement of position, technical basis, and RAI in addition to the response provided by Uranium One. This format was done to aid and help expedite the NRC staff in review of the RAI responses. Uranium One has worked with NRC staff over the past 17 days to assure responses to the RAI's are consistent with the information needs requested by NRC staff. Uranium One is hopeful that the attached responses will meet the information needs of the NRC and feel a review of the RAI responses can thus be completed in a short time frame.

As discussed with NRC staff from the start and throughout this amendment process, the timely review and approval of this request is of the highest importance to the company. If there are any additional information needs or questions, please do not hesitate to contact Uranium One and we will quickly provide NRC with the needed information to complete your review. Questions or information needs can be forwarded to me at (307) 234-8235 ext. 331 or by email at Jon.Winter@Uranium1.com.

Uranium One USA, Inc.
A Member of the Uranium One Inc. Group of Companies
tel +1 307-234-8235 • **fax** +1 307-237-8235
907 N. Poplar Street, Suite 260
Casper, Wyoming 82601
www.uranium1.com

uraniumone™
investing in our energy

Sincerely,

Jon Winter
Director, Health, Safety and Environment
Uranium One Americas

Enclosures:

1. Responses to the June 10, 2014 request for additional information.
2. Page replacements for the 2013 License Renewal Application in support of the amendment application.

cc: Ron Linton w/enclosures
Donna Wichers w/enclosures

Uranium One USA, Inc.
A Member of the Uranium One Inc. Group of Companies
tel +1 307-234-8235 • **fax** +1 307-237-8235
907 N. Poplar Street, Suite 260
Casper, Wyoming 82601
www.uranium1.com

RAI-1

Licensee's Statement or Position

By letters dated February 28, 2014 (Agency wide Documents Access and Management System ML14066A112), and March 27, 2014 (ML14113A421), Uranium One, USA, Inc., (Uranium One or the licensee) provided discussion, diagrams, and maps of the facility, equipment, and area where the re-drying of the Honeymoon, Australia (Honeymoon) yellowcake will take place. The main entry of the Honeymoon yellowcake into the Willow Creek dryer will be at the drum tipping station and interconnected conveyance system.

Technical Basis

NRC staff has determined that the drum tipping station is the main entry of the yellowcake into the re-drying process, and this may have the potential for airborne yellowcake dust. Regulatory Guide 8.31, C., 3.1, states that adequate ventilation should be provided in all facility areas in which radioactive materials might be spilled, suspended, or volatized (e.g., engineered controls), and isolation should be provided for yellowcake drying, packaging, and shipping areas from other accessible facility areas. The licensee has agreed in Materials License SUA-1341, License Condition 9.12, to follow the guidance in Regulatory Guide 8.31, as revised, or NRC approved equivalent. NRC staff has determined that the drum tipping station is a critical step in the process where Honeymoon uranium yellowcake may become suspended in the air. The drum tipping station is not isolated from other accessible areas.

RAI

The licensee shall demonstrate that the drum tipping station and interconnected conveyance system are isolated from other accessible facility areas, or provide adequate (portable) containment and ventilation (with filtration) to prevent potential dispersion of yellowcake to other accessible facility areas. That is, the licensee shall describe its proposed radiological controls for any location or operational situation where the Honeymoon yellowcake is not fully contained within an enclosed space.

RAI-1 Response

Uranium One will construct a temporary enclosure around the drum tipping device and the receiving hopper. Uranium One will also provide ventilation with filtration for the enclosure.

A temporary containment structure (enclosure) will be constructed within the Irigaray plant to enclose the drum tipping equipment and the receiving hopper which includes the transfer point from the hopper to the tubular drag conveyance system (see Figure 3.10a). The enclosure will be a 10 by 20 by14 wood framed structure enclosed with durable plastic sheeting. The enclosure will have one point of ingress/egress for drums and personnel. The containment structure will isolate the drum tipping and transfer equipment from the general Irigaray plant.

The temporary enclosure will be equipped with a negative air HEPA filtration system adequate to maintain a negative draft on the enclosure; in addition a smaller HEPA filtration system will be utilized to gather any residual fugitive dust (if present) when the seal between the cone and empty yellowcake drum is broken. Any dusting from the drum tipping system and transfer point to the tubular drag conveyor will be fully contained within the enclosed temporary containment structure. Standard operating procedures (SOP's) will be in place prior to operation of the

system and will include the use of PPE including respiratory protection when working in the enclosure, as an additional precautionary measure to keep employee exposure potentials ALARA.

Drawings of the planned enclosure system are provided as Figure 3.10a (attached).

uraniumone™
investing in our energy
907 North Poplar St., Suite 260 ,Casper, WY 82601 307-234-8235

Figure 3.10a
Irigaray Plant
Drum Tipper and Hopper Enclosure

Date: 6/26/2014	By: TM	Checked:	
Rev. No.	Description	Date	By

Sheet: 3.10a

RAI-2

Licensee's Statement or Position

The licensee stated in its letter dated March 27, 2014, that the Honeymoon yellowcake drying circuit consists of a rotary batch oil heated, vacuum dryer operated at less than 200degrees Celsius. The operating temperature of the Honeymoon rotary vacuum dryer was not sufficient to burn-off or remove the residual organics that may have carried over from the strip solution to the final precipitated yellowcake. As a result, the dried Honeymoon yellowcake can have a small amount of residual organic present that must be removed in the Willow Creek dryer/calciner. The licensee stated the Willow Creek dryer must be operated at higher temperatures than that of the Honeymoon vacuum dryer to reduce the residual organic concentration to meet the specification of the conversion facilities for further processing. The licensee indicated in its letter dated March 27, 2014, that temperatures were increased (on hot plates in a laboratory) to 650-degrees Celsius and held for one hour.

Technical Basis

NRC staff reviewed the technical and impact analysis from the licensee's February 28, 2014, letter and the supplemental technical and impact analysis from the licensee's March 27, 2014, letter but did not find any information about the drying process system, specifically operating temperatures, at Willow Creek. The NRC staff cannot determine if the temperatures suggested in the March 27, 2014, letter, i.e., 650-degrees Celsius, is within the design basis operating temperature for the Willow Creek dryer. Uranium One did not discuss what will be the optimum drying temperature and how long they will operate at that temperature. The NRC staff is requesting this information consistent with NUREG1569, Acceptance Criteria 3.2.3(5), which states the description of the equipment used and materials processed in the recovery plant, satellite processing facilities, well fields, and chemical storage facilities is acceptable if it meets specifications, quantities, locations, and operating conditions such as flow rates, temperatures, and pressures of radioactive materials and those hazardous materials with the potential to impact radiological safety, are clearly identified together with the hazards associated with these materials.

In addition, License Condition 9.6 states that written standard operating procedures (SOPs) shall be established and followed for all operational process activities involving radioactive materials that are handled, processed, stored, or transported by the licensee at or between the Irigaray and Christensen Ranch sites. It appears that the licensee has not written SOPs for the potential changes in dryer times and temperatures.

RAI

a. The licensee shall demonstrate that the Willow Creek dryer can operate safely within the recommended temperature as provided in a vendor or technical specification to remove the remaining solvents in the Honeymoon yellowcake. The licensee shall furnish to the NRC staff the vendor's or manufacturers technical specifications that include the maximum design basis operating temperature for the Willow Creek dryer.

b. The licensee shall provide a technical analysis that includes the optimum drying temperature, how they achieve this optimum drying temperature, and the required residence time the yellowcake must remain in the dryer to remove the organics.

c. In addition, the licensee shall commit to writing SOPs, in accordance with License Condition 9.6, that describes the optimum drying temperature and drying time, prior to operation of the Honeymoon yellowcake reprocessing system.

RAI-2 (a) Response:

The Willow Creek dryer was constructed as part of the Irigaray Central Processing Plant in 1978. The dryer is a multiple hearth dryer/calciner manufactured by the BSP Division of Envirotech Corporation (Belmont, California). A calciner is more than a dryer; a calciner is capable of operating at high temperatures to heat a material to a level below its melting point to cause loss of moisture, reduction or oxidation state and the decomposition of carbonates, hydrates and other compounds (ref: TheFreeDictionary.com).

With respect to the manufacturer design basis for the Willow Creek dryer/calciner, the May, 1977 Envirotech operations manual (Section 2.3 "Design Basis", page 4) provides the following temperature profile commonly used for yellowcake calcination:

Hearth #1	850F to 1000F (450C to 540C)
Hearth #2	1400F (750C)
Hearth #3	1500F (810C)

Section 2.3, Design Basis, also states that "If so desired, minor changes in temperatures and shaft speed could instead accomplish mere drying of the feed solids without calcination." Historically, the Willow Creek dryer has been operated as both a dryer (lower temperatures) and a calciner.

During 1978 and 1982, uranium was precipitated in the Irigaray process using ammonium bicarbonate rather than hydrogen peroxide as is used today. The resulting precipitate, ammonium diuranate or ADU, was the feed to the dryer. Calcination of the wet ADU was necessary to burn off the ammonium as well as other contaminants. During this time period, the dryer/calciner was operated as a calciner using the range of temperatures above for the calcination process.

In the late 1980's and through today, hydrogen peroxide is used to precipitate uranium in the Irigaray process rather than ammonium. The resulting product is uranyl peroxide or UO_4+xH_2O. The uranyl peroxide product is very clean, having no contaminants that require high temperatures for removal. Therefore, calcination of the Willow Creek uranyl peroxide has not been necessary. Operational drying temperatures have ranged over the years from 750F (400C) to 1200F (650C).

The May, 1977 operations manual discusses a variety of temperature ranges for different activities, including operation of the dryer/calciner at 200F (93C) for a minimum of 10 days to dry out any wet refractory brick inside the dryer, up to 1650F (900C) for a minimum of 8 hours to cure the refractory. There is no minimum temperature provided for drying activities, nor a maximum temperature for calcination. The manual does recommend operating the dryer/calciner at the lowest possible temperatures compatible with the desired product quality for fuel optimization. The manual also states that it is important to realize that different production systems may produce material with different handling characteristics which may require slightly different drying/retention times and calcination temperatures. Based on the various temperatures addressed for the various activities provided in the operations manual, the design temperature profile for the Willow Creek dryer/calciner would range from 200F to 1650F (93C to 900C) depending upon the result desired.

RAI-2 (b) Response

The Honeymoon yellowcake is a uranyl peroxide produced yellowcake that is produced from a solvent extraction (SX) process. The SX process uses an organic based solvent and extractant to concentrate the uranium in a stream from which the yellowcake is precipitated using a solution of hydrogen peroxide to produce the uranyl peroxide solid yellowcake. This yellowcake product is then dried in a low temperature vacuum dryer at less than 200C to produce the final Honeymoon yellowcake. Since the initial solution from which the yellowcake is precipitated is in contact with an organic solvent/extractant some amount of organic carryover into the precipitation solution is possible. This can result in some amount of organics being present in the dried product. Since the Honeymoon yellowcake was dried at a relatively low temperature (<200C) the low molecular weight organic solvent is volatilized in the drying process but the higher molecular weight organic extractants do not volatilize at these low temperatures and, therefore, can remain with the yellowcake after it is dried.

When the Honeymoon yellowcake was analyzed by the Cameco Blind River laboratory for acceptance purposes, it was found that the yellowcake contained levels of residual organics that were above the specifications allowable for the Blind River refining process. The rejected lots of Honeymoon yellowcake were shipped to the Uranium One Willow Creek project in Wyoming for reprocessing in their high temperature calciner/dryer to remove these residual amounts of organics in order to meet the Blind River yellowcake acceptance criteria.

As described in the responses to RAI 2(a), the Willow Creek dryer is a very versatile dryer that can operate over a wide range of temperatures and throughputs. In order to determine the optimum dryer temperature and throughput rate, a series of bench scale lab tests were conducted that enabled U1 to determine which dryer conditions produced a yellowcake product free of organics to a level below 0.1% organics as analyzed using the Soxhlet hexane extraction method (Method 1664 Oil and Grease Analysis).

U1 conducted two series of bench scale tests to establish the conditions under which the organics could be destroyed in the Willow Creek dryer. The first of these tests were conducted at the Cameco Blind River Refinery (BRR) laboratory using a sample of the organic containing Honeymoon yellowcake heated in a beaker placed on a temperature controlled hot plate. The temperature of the hot plate was varied and monitored by a thermocouple located at the bottom of the sample in the beaker as the temperature was increased. Observations of the volatilization and chemical reaction of the organics was observed and the final sample was analyzed for % organics following an appropriate amount of heating time. The results of these tests and the observations during the heating process are given in Table 1.

Table 1: Evaluation of Calcination of Honeymoon Uranium ore Concentrate (Cameco Blind River Laboratory)

Lot Number	Test Conditions	Physical Characteristic	Before Calcination Test	After Calcination Test	Observations
HM 005	Pyrex beaker on a hot plate with thermocouple temperature measurements	Extractable Organic Loss on Ignition 165C (before test) or 110C (after test) Bulk Density	2.8% 15% 1.5 g/ml	<0.01% 0.7% 1.8g/ml	Exothermic reaction began at 170C -180C (338F - 356F) Fumes were noted with a change in color of the UOC. Temperature rapidly increased to a maximum 300C - 475C (572F - 887F). Sample cooled rapidly once the reaction was complete.
HM 010		Extractable Organic	1.8%	< 0.01%	Exothermic reaction began at 158C (316F). Fumes were noted with a dark spot in the UOC. Temperature rapidly increased to a maximum 255C (491F).
	Pyrex beaker on a hot plate with thermocouple temperature measurements	Loss on Ignition 165C (before test) or 110C (after test)	16.0%	0.4%	
		Bulk Density	1.3 g/mL	1.5 g/mL	
HM 014		Extractable Organic	1.1%	<0.01%	Exothermic reaction began at 230C (446F). Colour change with black specs and browning of UOC, but middle is still a yellow colour. Temperature rapidly increased to a maximum 380C (716F). Temperature of the hotplate increased to 450C (842F) without any further reaction. Further reaction occurs when UOC was stirred with a temperature of 410C (770F) noted.
	Pyrex beaker on a hot plate with thermocouple temperature measurements	Loss on Ignition 165C (before test) or 110C (after test)	14.9%	0.4%	
		Bulk Density	1.4 g/mL	1.6 g/mL	
UO_4 Control		Extractable Organic	< 0.01%	< 0.01%	Fuming, dusting and degassing was not noted during test. UOC was heated to a temperature of 350C (662F) with probe firmly on bottom of the beaker. UOC turned from yellow to brownish/ orange colour.
	Pyrex beaker on a hot plate with thermocouple temperature measurements	Loss on Ignition 165C (before test) or 110C (after test)	13.6%	-	
		Bulk Density	1.4 g/mL	1.6 g/mL	

The results of these initial tests concluded that the Honeymoon yellowcake could be heated to temperatures that gave excellent results for removing residual organics (typically <0.1% organics). The reaction of the Honeymoon yellowcake to the conditions of heating in these tests also indicated that the material reacted quickly to re-heating and that the resulting yellowcake met all of the specifications of the Blind River refinery. The temperature range over which these tests were conducted was 158C – 350C (320F – 660F). These temperature ranges are well within the vendor specified Willow Creek dryer operating temperature range as noted in the response to RAI 2a above.

Since the tests conducted at the BRR laboratory were conducted on a hot plate to initially establish the potential temperatures which would give acceptable residual organic levels, it was felt that additional testing in a more controlled environment to simulate the conditions of the Willow Creek dryer should be conducted. These additional tests were conducted in a heated and temperature controlled muffle furnace which more realistically simulated the conditions inside the Willow Creek dryer. These tests were conducted at Intermountain Laboratory (IML) on controlled samples of Honeymoon yellowcake to both confirm the results of the BRR tests and to establish the optimum residence time for drying of the Honeymoon yellowcake. The results of these tests are given in Table 2.

Table 2: Results of Muffle Furnace Drying of Honeymoon Yellowcake
(Intermountain Laboratory Results)

Lab ID	Sample ID	LECO (TOC)[1]	Oil & Grease (%)[2]	Comments[3,4]
S1404033-036	HM010, Drum 61 (Raw)	2.6	1.3	Organic containing raw sample. Sample was not heated
S1404033-038	HM010, Drum 61 (300C)	0.10	<0.01	Sample was heated at 300C for 2 hours
S1404033-041	HM010, Drum 61 (400C)	0.08	<0.01	Sample was heated at 400C for 2 hours
S1404033-039	HM010, Drum 61 (500C)	0.07	<0.01	Sample was heated at 500C for 2 hours
S1404033-034	HM010, Drum 61 (600C)	0.05	<0.01	Sample was heated at 600C for 2 hours
S1404033-040	WC 53 (Non-organic containing Blank Control)	0.01	<0.01	Blank Yellowcake Sample (Unheated)
S1404033-037	HM010, Drum 61 (400C)	0.07	<0.1	Sample was heated at 400C for 18 hours to determine the effect of longer heating

Notes:

1. Analysis for Total Organic Carbon using a LECO analysis apparatus.
2. Analysis for Oil & Grease (wt %) using EPA Method 1664 (Equivalent to the Soxhlet hexane method used by Blind River Refinery). An initial detection limit used was 0.1%, which was later decreased to 0.01%.
3. Test Conditions: A sample of the Honeymoon yellowcake was placed in a beaker and set into a muffle furnace at a controlled temperature.
4. The sample was observed during frequent time intervals and for all of the tests the organic decomposition process was initiated and complete within a 5 – 20 minute time interval. Upon completion of the decomposition process the sample was held for 2 hours and showed no additional reaction once the decomposition process stopped. All samples were held in the muffle furnace for a total period of 2 hours (18 hours for sample S1404033-037).

The tests were conducted using a sample of Honeymoon yellowcake in a beaker placed in a temperature controlled muffle furnace for a specified amount of time. It was noted that the decomposition reaction of the organics began relatively quickly once the sample reached the muffle furnace temperature. The samples were held at the set temperatures for a period of 2 hours to assure that the reactions of the organic decomposition was complete.

In order to establish a rapid and simple method to detect residual organics in the tested samples, the IML laboratory performed analytical testing on the final Honeymoon yellowcake product using both a Total Organic Content (TOC) analysis as well as the Method 1664 (Soxhlet hexane extraction method) for oils and greases which is the method that the Blind River Refinery uses for testing and acceptance of yellowcake product. Results of both of these analysis showed consistent results when applied to low organic residual samples as can be seen in Table 2.

Using the data from these two bench scale testing programs, Uranium One established the following conclusions:

1. The decomposition of the residual organics in the HM YC occurs relatively rapidly once a minimum dryer temperature is reached. Both laboratories reported that the decomposition occurred as early as 5 minutes into the heating cycle and was complete within a short period of the initiation of the decomposition reaction.

2. A temperature range of 300C – 400C (~570F – 750F) was adequate to fully decompose the organics in the Honeymoon yellowcake.

3. The IML results showed that all organic residuals were destroyed quickly upon initiation of the decomposition reaction. The samples were held at the test temperature for 2 hours during which time no further reactions occurred. This indicates that the decomposition of the organics occurs rapidly and will be complete within less than a 2 hour residence time.

4. The final dried yellowcake product was a solid that could be safely packaged and shipped to the BRR for further processing.

<u>Recommendations for Dryer Operating Conditions.</u>

The results of the testing program to establish design operating conditions demonstrated the following:

1. The Honeymoon yellowcake can be safely re-dried in the Willow Creek dryer/calciner at reduced temperatures and residence times that are less than those which are typically used to dry wet uranium filter cake from the Willow Creek process. This was clearly demonstrated in the bench scale laboratory testing program. Since the introduction of the Honeymoon yellowcake will be in the form of an already dried product the same dryer heating load will not be required since the product is already dry and heat will not be required to drive off the initial moisture in a wet filter cake.

2. It is recommended that the dryer be operated at a reduced temperature within a range of 300C – 500C (~ 570F – 900F). The initial operation of the dryer will be set at 300C (~570F) and a test run will be conducted on a single drum of the Honeymoon yellowcake at this condition to establish whether all residual organics can be decomposed. If it is

determined that residual organics still exist the temperature will be increased in 100F (38C) increments until a temperature is reached that will produce a yellowcake with acceptable organics. This will confirm the bench scale testing that showed this temperature range to be effective for reducing any residual organics to negligible levels.

3. It is recommended that the residence time in the dryer be operated in a range of 1 – 2 hours. The residence time in the dryer will be initially set at 2 hours which was the maximum time in the test program that showed complete decomposition of organic residuals. Actual laboratory results showed that the decomposition of the organics occurs rapidly and that lower residence times could also give acceptable results for the decomposition of the organics. If the initial drum(s) of Honeymoon yellowcake at the proposed conditions of 300C (~570F) and 2 hours residence time show good results, Uranium One may increase the feed rate to the dryer to reduce the residence time to the dryer, or increase the speed of the dryer rake arm, in 30 minute increments. If the initial test results show that there is still an unacceptable level of organics in the dried yellowcake, Uranium One will increase the residence time to allow the organics to be more fully decomposed.

4. If it is established that the final dried yellowcake product is dried to an undesirable higher uranium oxide state (UO2), Uranium One will consider lowering the residence times in the dryer to produce the desired UO3 or U3O8 product. This can be achieved by increasing the speed of the dryer rake arm or by increasing the rate of the feed conveyor. The conveyor is equipped with a variable frequency drive that will allow feed rates ranging from 210 lbs/hr up to 1,260 lbs/hr. The optimum design rate of the feed conveyor is 800 lbs/hr.

RAI-2 (c) Response

Uranium One commits to writing SOPs, in accordance with License Condition 9.6, that will describe the optimum drying temperature, and drying time, prior to operation of the Honeymoon yellowcake reprocessing system. Uranium One anticipates the drying temperature and drying time will be a range depending on the final dried yellowcake product desired. The initial confirmation run for the Honeymoon yellowcake will utilize a low temperature with a range of residence times to determine the optimum drying conditions. High temperatures and long residence times will lead to the conversion of the uranyl peroxide to UO3, U3O8 and lower oxide forms. It is not necessary nor desirable to dry the product to a low oxidation state as the conversion facility acceptance criteria allows for all forms of uranyl peroxide, uranium trioxide and U3O8 to be acceptable feed.

RAI-3

Licensee's Statement or Position

The licensee's February 28, 2014, letter states the combined quantities of re-dried Honeymoon yellowcake (570,000 lbs.) and the licensee's forecasted annual production (600,000 lbs.) from Willow Creek will total almost 1,200,000 lbs. This quantity of uranium is below the annual licensed production capacity of 2,500,000 lbs. The licensee further stated that the proposed action is not anticipated to result in a significant change to the types or amounts of any effluents that may be released off-site.

Technical Basis

NUREG 1569, Appendix A, states that the review should include the updates and changes to any site characterization information important to the evaluation of exposure pathways and doses including site location and layout, uses of adjacent lands and waters, population distributions, meteorology, the geologic or hydrologic setting, ecology, background radiological or non-radiological characteristics and other environmental features. The NRC staff determined from the licensee's statement that the proposed action is not anticipated to result in a significant change to the types or amounts of any effluents that may be released off-site but that there may be some change (although not significant) to the types or amounts of any effluents that may be released. The licensee should identify changes that would occur or state clearly that there are no changes.

RAI

The licensee should identify and explain what changes to the types or amounts of any effluents that may be released or clearly state that there are no changes. This information is necessary for the NRC to complete its review of the potential environmental consequences of the proposed operational activities.

RAI-3 Response

Uranium One will not see an increase in the amounts of any effluents that will be released as a result of the re-drying of the Honeymoon yellowcake.

Changes to the types of effluents that will occur as a result of the re-drying of the Honeymoon yellowcake will be limited to a change in the solubility classification of the dried uranium from a 85% Class D and 15% Class W (DAC of 4.7E-10 µCi/ml) material to a Class Y (DAC of 2E-11 µCi/ml) material for the areas associated with the dryer (drum packaging room, furnace room and exterior yellowcake control room) used for the determination of occupational exposures during the re-drying of the Honeymoon yellowcake. Review of the data collected through May 2014 indicate the use of the Y DAC would not result in additional posting for any of the yellowcake drypack areas over what is previously posted. Occupational dose values for the Irigaray employees would remain essentially the same. The solubility classification for the remainder of the Irigaray facility (areas outside yellowcake drypack) will remain as specified in the license renewal application at 5E-11 µCi/ml or a Class D material.

One additional change will be the uranium solubility classification from the drier stack during the re-drying of the Honeymoon yellowcake will change from a 47% Class D and 53% Class W (1.9E-12 µCi/ml) material to a Class Y (9E-14 µCi/ml) material. The remainder of the stack

emissions for Ra-226, Th-230 and Pb-210 will remain the same solubility classification that was previously utilized to calculate public dose.

Uranium One reviewed the public dose calculations for 2012 and the use of the more restrictive DAC increased the public dose at sample location IR-13 from 0.04% of the effluent concentration or 0.00001 rem to 0.97% of the effluent concentration or 0.00024 rem. The calculation is conservative as it is based on operations for re-drying Honeymoon yellowcake for the entire year rather than the projected 91 days needed for the two re-drying campaigns and 100% occupancy.

Uranium One has reviewed the proposed action and believes it meets the criterion specified within 10 CFR 51.22 as a categorical exclusion not requiring environmental review. Changes to the types of effluents that will occur as a result of the re-drying of the Honeymoon yellowcake will be limited to a change in the solubility classification of the dried uranium and will result in no increase in the amount of any effluents that may be released offsite; no significant increase in individual or cumulative occupational radiation exposure from the proposed action is expected; no construction impact is expected; and no increase in the potential for or consequences from radiological accidents have been identified as a result of this proposed action.

RAI-4

Licensee's Statement or Position

Notwithstanding the license conditions as determined from the License Renewal Application (ML081850689, ML083110405, ML092110700, ML103280266, ML120820095, ML12206A436) and analyzed in the Safety Evaluation Report (ML13015A356), the licensee stated in Section 4.1.2 of the License Renewal Application that airborne uranium radioactive emissions in the Irigaray Central Processing Plant (CPP) are a result of yellowcake particulate emissions from the drying/packaging circuit, and that the Irigaray CPP employs a multi-hearth dryer for yellowcake processing. The process uses a hydrogen peroxide precipitation and a washing stage that forms a cake that does not require high-temperature firing to remove chemical contaminants. In the February 28, 2014, letter, Uranium One stated the Honeymoon yellowcake is being laboratory tested to determine the optimum dryer temperature and dryer retention time requirements needed to reduce residual organic levels to acceptable concentrations for further processing at the converters. Although the optimum temperature has not been determined, Uranium One, in its letter dated March 27, 2014, stated that the testing for the operating temperature will increase to 650-degrees Celsius and hold for one hour. Furthermore, Uranium One stated in its March 27, 2014, letter that they will utilize the site action level of 25-percent of the Derived Air Concentration (DAC) for soluble uranium as the guideline to determine if additional control measures are needed to maintain ALARA. Notwithstanding the license condition identified in the Safety Evaluation Report for establishing an adequate DAC for uranium, Uranium One needs to determine if a higher operating temperature, as determined from the laboratory temperature test, will impact and possibly increase the natural uranium solubility classification from Day/Week (D/W) to Year (Y).

In addition, License Renewal Application, Table 5.6, provides the proposed solubility classes for uranium, based on plant location. This table indicates that the yellowcake will be either Class D or Class W, or a combination of Class D and W, based on location.

Technical Basis

According to 10 CFR Part 20, Appendix B, Table 1, there are natural uranium concentration limits for three classifications based on lung solubility. The most conservative or the concentration that can produce the highest dose is the Y classification. The increase in drying temperature can change the product that could result in a final chemical form at the Appendix B, Table 1 concentration limits for Classification Y. The NRC staff cannot determine from the relationship between hot plate temperature testing and the final dryer operating temperature, the solubility of the natural uranium. Uranium One needs to identify the final operating dryer temperature, how that final operating dryer temperature was achieved, and whether this final operating dryer temperature changes the final chemical form to a product that would be classified as "Y" and the action limits.

RAI

a. Uranium One shall explain how the hot plate temperature testing relates to the final dryer operating temperature and how the final operating temperature affects the chemical form of the final product and the solubility of the uranium. This explanation should discuss in sufficient detail as to whether Uranium One can remain at the current solubility as identified in the Safety Evaluation Report (NRC, 2013), or whether Uranium One needs

to use the Class Y solubility classification during the drying of the Honeymoon yellowcake.

b. The licensee should update the proposed uranium solubility classifications presented in License Renewal Application, Table 5.6, as appropriate.

RAI-4(a) Response

Uranium One would like to clarify that the March 27, 2014 letter that references using 25% of the DAC for soluble uranium is in reference to the drum tipping station. The Honeymoon yellowcake at this point is by definition in Regulatory Guide 8.30, Section 2.2, a soluble Class D uranium compound that has been previously dried in a low temperature rotary drier at 150°C. The solubility classification of the Honeymoon yellowcake would not change until it has entered the dryer/calciner and the material is re-heated. Uranium One would also like to point out that solubility classification studies conducted by Radiation Safety Engineering Inc. (RSEI) in July 2011 for Willow Creek materials dried at 650-degrees Celsius indicated the solubility classification of 85% Class D and 15% Class W were conservative so the use of this ratio was continued.

Because of the relatively short operational period required to re-process the Honeymoon yellowcake (two campaigns for a total of 91 days) Uranium One is not proposing to conduct solubility classification studies on the re-dried Honeymoon yellowcake and intends to take the conservative approach that the re-dried yellowcake will be a Class Y material. The Class Y solubility classification will apply to the areas associated with the dryer (drum packaging room, furnace room, and exterior yellowcake control room). Use of the Class Y solubility classification is discussed in detail in response to RAI-3.

RAI-4(b) Response

Uranium One has updated the proposed uranium solubility classifications presented in Table 5.6 of the License Renewal Application (LRA) which is included with this submittal. Additionally, page 5-23 of the LRA was revised to add a commitment for Uranium One to follow the solubility classifications during the re-drying of the Honeymoon yellowcake as stipulated in revised Table 5.6.

RAI-5

Licensee's Statement or Position

Enclosure 3 to the licensee's letter dated February 28, 2014, provides recommended text for inclusion in the License Renewal Application. The recommended text includes two paragraphs on Page 3-32b that are "open ended," meaning that the licensee plans to obtain and report additional information at a later date when the information becomes available. The missing information includes compatibility of the Honeymoon uranium with the Willow Creek recovery process and identification of any additional equipment that may be needed for re-drying.

Technical Basis

The licensee presented proposed License Renewal Application text using information that was available at the time of submittal to the NRC.

RAI

The licensee shall provide the information to the NRC and update the two paragraphs, as appropriate, if the information is available. Alternatively, the licensee shall commit to updating the proposed text in the License Renewal Application through its performance-based license condition (License Condition 9.4) in a timely manner.

RAI-5 Response

Uranium One has updated the two paragraphs on Page 3-32b that were open ended and are enclosing updated pages 3-32a through 3-32d. The updated pages discuss the added equipment needed for the reprocessing of the Honeymoon yellowcake. Updated equipment includes the following:

Dust free drum tipping station
Enclosed tubular drag conveyor system
Temporary enclosure to isolate system from general plant
Ventilation system for temporary enclosure

Should NRC find the updated information insufficient Uranium One commits to updating the proposed text in the LRA through its performance based license condition (License Condition 9.4) in a timely manner.

RAI-6

Licensee's Statement or Position

Enclosure 2 to the licensee's letter dated February 28, 2014, includes a technical and impact analysis of the proposed change. This enclosure provides a discussion of the operational procedure that will be used. In addition, the licensee's letter dated March 27, 2014, provides additional discussions of the operational details.

Technical Basis

License Condition 9.6 states that written SOPs shall be established and followed for all operational process activities involving radioactive materials that are handled, processed, stored, or transported by the licensee at or between the Irigaray and Christensen Ranch sites. The SOPs for operational activities shall enumerate pertinent radiation safety practices to be followed in accordance with 10 CFR Part 20.

The licensee's letters do not provide all necessary step-by-step instructions for operating the system. For example, the instructions do not clearly specify how the drum is opened, placed into the tipping station, removed from the tipping station, and re-lidded. In addition, the licensee has not clearly addressed how it will control the spread of loose yellowcake while handling opened drums. Further, the discussions presented in the letters do not clearly explain how the licensee knows when the drum is empty and requires replacement. Finally, the discussions do not provide contingency actions, such as what actions to take if the conveyor system becomes clogged.

RAI

a. The licensee shall commit to developing SOPs, in accordance with License Condition 9.6, for all pertinent phases of the re-drying operation, including, but not limited to, the drum tipping station, the conveyor system, and drying operations specific to the Honeymoon yellowcake. The SOPs shall provide step-by-step instructions, including contingency actions, and shall be in place prior to operating the Honeymoon yellowcake re-drying system.

b. The licensee shall address radiological controls while the drum is opened in the SOPs. Alternatively, the licensee could provide the radiological controls in a radiation work permit to supplement SOPs. This licensee-approved procedure shall be in place prior to operating the Honeymoon yellowcake re-drying system.

RAI-6(a) Response

Uranium One commits to developing SOPs in accordance with License Condition 9.6 specific to the systems associated with the Honeymoon yellowcake re-drying activities. Specifically SOPs will be developed for the drum tipping system, conveyor system, drying and packaging operations associated with the re-drying of the Honeymoon yellowcake.

Step-by-step instructions and contingency actions will be in place prior to operating the Honeymoon yellowcake re-drying system. Uranium One will continue to address maintenance activities that have the potential for contact with yellowcake under a Radiation Work Permit (RWP).

In NRC's Technical Basis discussion for RAI-6, specific questions were stated regarding actions to be taken if the conveyor system becomes clogged and what systems are in place to ensure that a drum is empty and requires replacement. The following are Uranium One's responses to these questions.

Plugging or Clogging of Conveyor:

The manufacturer of the conveyor equipment (Hapman) has provided the following information with respect to plugging of the conveyor. For our application, the manufacturer indicated the potential for the conveyor system to become plugged or clogged is **very unlikely,** however plugging of a tubular conveyor system can occur and is associated with three circumstances:

- Foreign objects or material get into the system. If this occurs, the conveyor will automatically stop. The blockage/clogging will almost always occur at the first 90 degree turn of the conveyor if the object does not bind the system immediately at the hopper feed discharge. If a blockage should occur, which is highly unlikely, two mechanisms exist for un-blocking the conveyor:
    - The conveyor system has 7 cleanout locations. These cleanout locations would be used to dislodge and remove the foreign object causing the blockage. The locations of the cleanouts are as follows:
        - two cleanouts located within 2 foot of the 90° turn for vertical lift
        - two cleanouts back from the dryer discharge point
        - top of conveyor above discharge idler
        - drive box
        - bottom idler
    - The conveyor system is equipped with a reverse to help unbind the system if necessary.
    - Note: Maintenance work to the tubular conveyor will be performed under a RWP.
- Overfill the conveyor

  It is not possible to overfill this particular conveyor. The system was designed (and built) for Uranium One with a rotary valve at the bottom of the hopper that controls the feed from the hopper to the conveyor. The rotary valve will eliminate the potential for overfilling the conveyor. If the rotary valve should fail, feed to the conveyor would immediately stop as there is no other mechanism to feed the conveyor.
- Feed material characteristics change (i.e. material is wet and causing plugging of the system)
    - Honeymoon yellowcake is dry and has a consistent feed characteristic that will not change, so there is no potential for plugging from wet material.

Verification System for Empty Drum

The system has a built-in control that will identify when a drum is empty. The hopper has a level sensor and switch which indicates that the hopper is empty, meaning that flow from the drum has ceased and the drum is empty. Further, the discharge valve on the drum tipper cone will not open unless the level sensor in the hopper indicates there is adequate volume in the hopper (the hopper will be empty).

To further insure that a drum is empty, the operator will tap the drum and cone assembly with a rubber mallet to verify the containers are empty. The drum tipping system also has a vibrator for the cone to help with voiding the of yellowcake from the cone assembly and drum.

Additionally, the system design will not allow the drum to reverse/rotate back to the vertical position (starting position) unless the discharge valve on the cone adaptor is in the closed position.

RAI-6(b) Response

Radiological controls for opening drums will be addressed in the SOP for the drum tipping station. Uranium One will require that all work with yellowcake drums (empty or full) associated with the drum tipping activity will only be conducted with the appropriate respiratory equipment and PPE to minimize potential employee exposures. These activities for the Honeymoon yellowcake will be conducted in an enclosure isolated from the general plant with a dust collection system.

Procedures will be in place prior to the operations of the Honeymoon yellowcake re-drying system.

RAI-7

Licensee's Statement or Position

Enclosure 5 to the licensee's February 28, 2014, letter includes updated figures from the License Renewal Application. Included in this enclosure is a revised Figure 3.11, Irigaray Processing Facility Process Flow Diagram, which was updated to show the proposed Honeymoon yellowcake reprocessing system.

Technical Basis

The proposed changes to the NRC-approved process flow path have not been incorporated in a second related drawing. In particular, NRC staff has determined that License Renewal Application, Figure 4.1, Irigaray Process Unit Drying/Packaging Unit Schematic, should also be updated similar to Figure 3.11.

RAI

The licensee shall provide an updated License Renewal Application, Figure 4.1, as part of the application process, or commit to updating Figure 4.1 through the performance-based license condition (License Condition 9.4).

RAI-7 Response

Figure 4.1 (attached) of the License Renewal Application has been revised to reflect the re-drying of the Honeymoon yellowcake at the Irigaray facility.

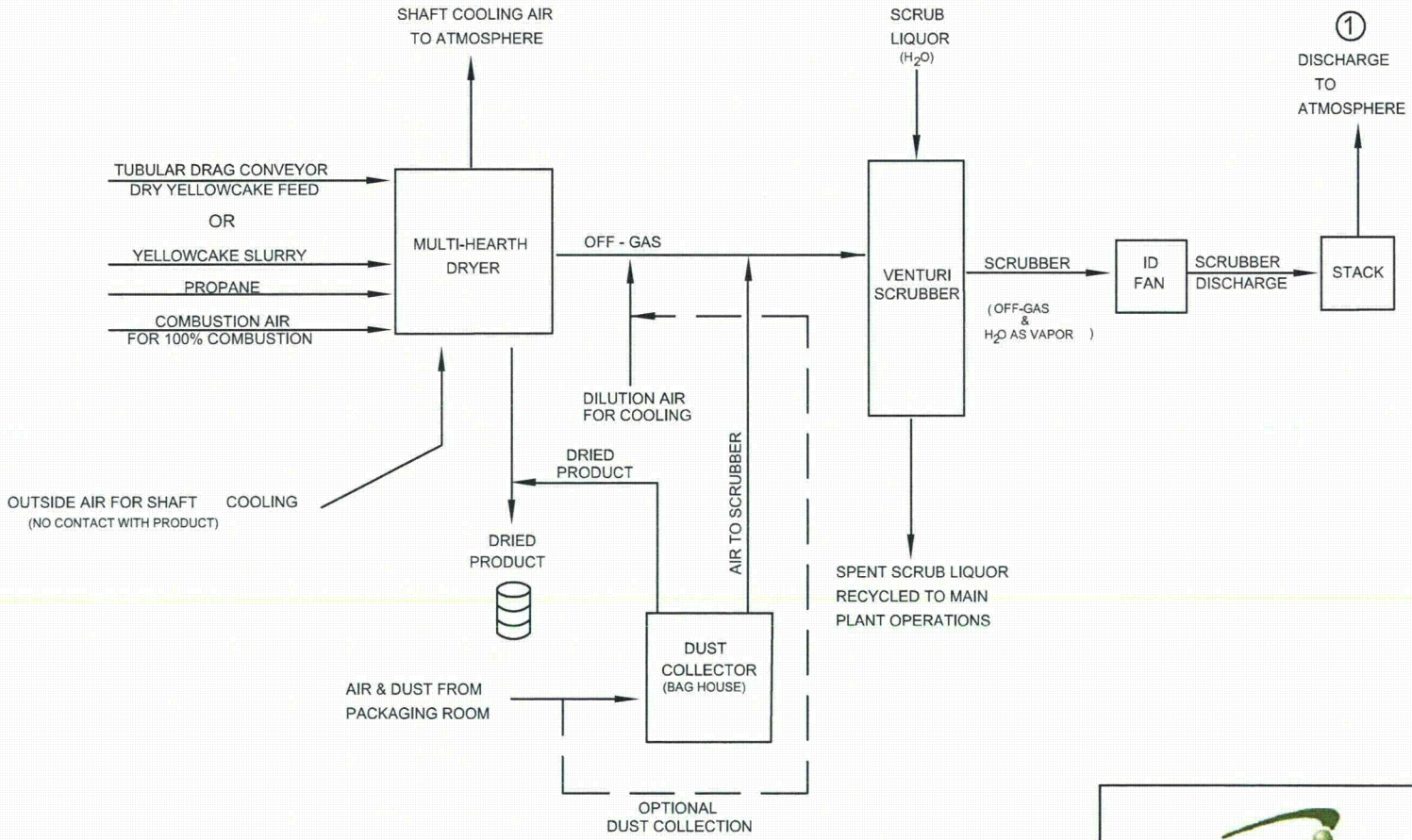

1 EMISSION POINT FOR DRYING & PACKAGING UNIT

uraniumone™
investing in our energy

Figure 4.1
Irigaray Process Unit
Drying/Packaging Unit Schematic

Geology: Enviro: Drafting: RMO Date: May, 2008 Revision: June 12, 2014	State: Wyoming County: Johnson: Scale: Drawing ID: FIG IR Dryer Schematic.dwg

RAI-8

Licensee's Statement or Position

The licensee's February 28, 2014, letter references License Renewal Application, Section 3.4.1.3, in several places. The NRC staff questioned whether this section number was correct.

Technical Basis

License Renewal Application, Section 3.4.1.3, refers to the Elution and Precipitation Circuit, while Section 3.4.1.4 refers to the Yellowcake Dewatering, Drying and Packaging Circuit. Unless the License Renewal Application has been renumbered in recent years, the correct reference should be 3.4.1.4 which refers to yellowcake drying.

RAI

The licensee shall confirm the referenced section from the license application, and update the submittal as appropriate.

RAI-8 Response

Uranium One agrees that the proper reference is 3.4.1.4 and not 3.4.1.3. The reference to Section 3.4.1.3 of the License Renewal Application was incorrectly referenced in three locations. The first incorrect reference was in the February 28, 2014 cover letter (fourth paragraph, first page) to Mr. Andrew Persinko for the Amendment Application submittal. The second incorrect reference is located on page 1 of 5, fourth paragraph, first bullet of the *Materials License SUA – 1341 License Amendment Request – Technical and Impact Analysis* as part of the Amendment Application. The third incorrect reference was located on page 5 of 5 of the *Materials License SUA – 1341 License Amendment Request – Technical and Impact Analysis,* last paragraph.

Uranium One has included a revised page one and five of the *Materials License SUA – 1341 License Amendment Request – Technical and Impact Analysis* with the corrected reference to the License Amendment Applications Section 3.4.1.4.

MATERIALS LICENSE SUA-1341 LICENSE AMENDMENT REQUEST TECHNICAL AND IMPACT ANALYSIS
For Re-drying Honeymoon Dried Yellowcake at the Willow Creek Irigaray Processing Plant

1) Introduction and Purpose

The Willow Creek ISR facility owned by Uranium One USA, Inc. ("Uranium One") is proposing to re-dry approximately 570,000 pounds of dried yellowcake (the "Honeymoon Yellowcake") originally produced at the Honeymoon ISR facility in Australia owned by Uranium One's affiliate, Uranium One Australia Pty Ltd. The Honeymoon Yellowcake has been previously dried using a low temperature rotary vacuum dryer. Some organic material from Honeymoon's solvent extraction circuit is present in the Honeymoon Yellowcake in amounts that do not meet the specifications of conversion facilities. As a result, prior to sending it to the conversion facility, the Honeymoon Yellowcake must be re-dried at higher temperatures in order to burn off the residual organic.

Uranium One proposes to re-dry the Honeymoon Yellowcake using the dryer/calciner ("dryer") at Willow Creek's Irigaray plant. The Honeymoon Yellowcake would be processed on a campaign basis separate from any Willow Creek yellowcake slurry. In doing so, Uranium One will maintain traceability and accountability of the Honeymoon Yellowcake. After the re-drying operation as described in this submittal and its appendices, the material will be packaged and transported to the conversion facilities.

NRC determined in their letter of December 24, 2013 that the transfer, possession and storage of the Honeymoon Yellowcake at Willow Creek is permitted under Uranium One's Materials License SUA-1341 ("Materials License"). Uranium One expects to receive the first Honeymoon Yellowcake shipment from Australia on March 3, 2014. Also, Uranium One was recently advised that Honeymoon Yellowcake currently stored at the Cameco Blind River conversion facility can be transferred and stored at Willow Creek. In addition, the Willow Creek Irigaray plant will be receiving some Honeymoon Yellowcake which is currently stored at the Converdyn conversion facility.

The purpose of this submittal is to request that the NRC review and approve an amendment to the Materials License to permit the re-drying of the Honeymoon Yellowcake at the Willow Creek Irigaray processing plant as described in this submittal; specifically, Uranium One requests that the Materials License be amended to:

- Modify Section 3.4.1.4 of the approved License Renewal Application ("LRA") to allow re-drying dry yellowcake in addition to processing of uranium-laden resin and slurry materials from other ISR operations; and
- Modify Condition 9.3 to add language that states that the 4.5 hour retention time does not apply to the re-drying of the Honeymoon Yellowcake.

Uranium One is authorized under the Materials License to produce 2.5 million pounds of dried yellowcake on an annual basis. The combined quantities of re-dried Honeymoon Yellowcake (570,000 lbs) and Uranium One's forecasted annual production (600,000 lbs) from Willow Creek will total almost 1,200,000 lbs, well below the annual licensed production capacity.

The following sections of this submittal form the Technical and Impact Analysis for re-drying the Honeymoon Yellowcake at Willow Creek.

- is expected; no significant construction impact is expected; and no significant increase in the potential for or consequences from radiological accidents is expected.

- As part of Uranium One's review process to determine if the proposed action would require a license amendment or could be performed under the site SERP process, Uranium One reviewed the NRC guidance documents SECY-95-211 and Policy 2012-06 and determined they are not applicable to the characterization of the Honeymoon Yellowcake.

Summary

Uranium One has already received an approval to receive and store the Honeymoon Yellowcake at its Willow Creek Irigaray facility.

Uranium One is confident the re-drying of the Honeymoon Yellowcake can be completed in a manner that is consistent with existing controls, procedures, regulations and policies applicable to Willow Creek and the terms of its Materials License.

Therefore, Uranium One requests that the NRC approve the License Amendment to allow the re-drying of the Honeymoon Yellowcake through the Willow Creek Irigaray dryer and to specify that Sections 3.4.1.4 and 9.3 are amended as set forth in Paragraph 1) above.

SUA-1341 May 30, 2008 License Renewal Application
June, 2014 Amendment Request
Page Replacement Directions

Page(s) Removed	Page(s) Inserted	Description of Change
vi	vi	Revised Table of Content List of Figures (added Figures 3.10a and 3.10b)
3-30	3-30	Replacement Figure 3.10-Irigaray General Plant Arrangement
	3-30a	New Figure 3-10a Honeymoon YC Reprocessing Temporary Enclosure Ventilation System
	3-30b	New Figure 3-10b Honeymoon YC Reprocessing Equipment – General Diagram
3-32	3-32	Change made to match page numbers on following pages, no change to text
	3-32a	Added text to Toll-drying of Yellowcake
	3-32b	Text carry over for Toll-drying of Yellowcake
	3-32c	Text discussing Honeymoon yellowcake equipment
	3-32d	Text regarding Honeymoon yellowcake equipment
3-33	3-33	New page to match text to document
3-35	3-35	New Figure 3.11 Irigaray Process Flow Diagram
4-5	4-5	Revised Figure 4.1 Irigaray Process Unit Drying/Packaging Unit Schematic
5-23	5-23	Added text to state Honeymoon yellowcake re-drying would follow Table 5.6 solubility classifications
5-31a	5-31a	Added text describing solubility classifications for Honeymoon yellowcake.
5-32	5-32	Revised Table 5.6 Uranium Solubility Classifications

LIST OF FIGURES

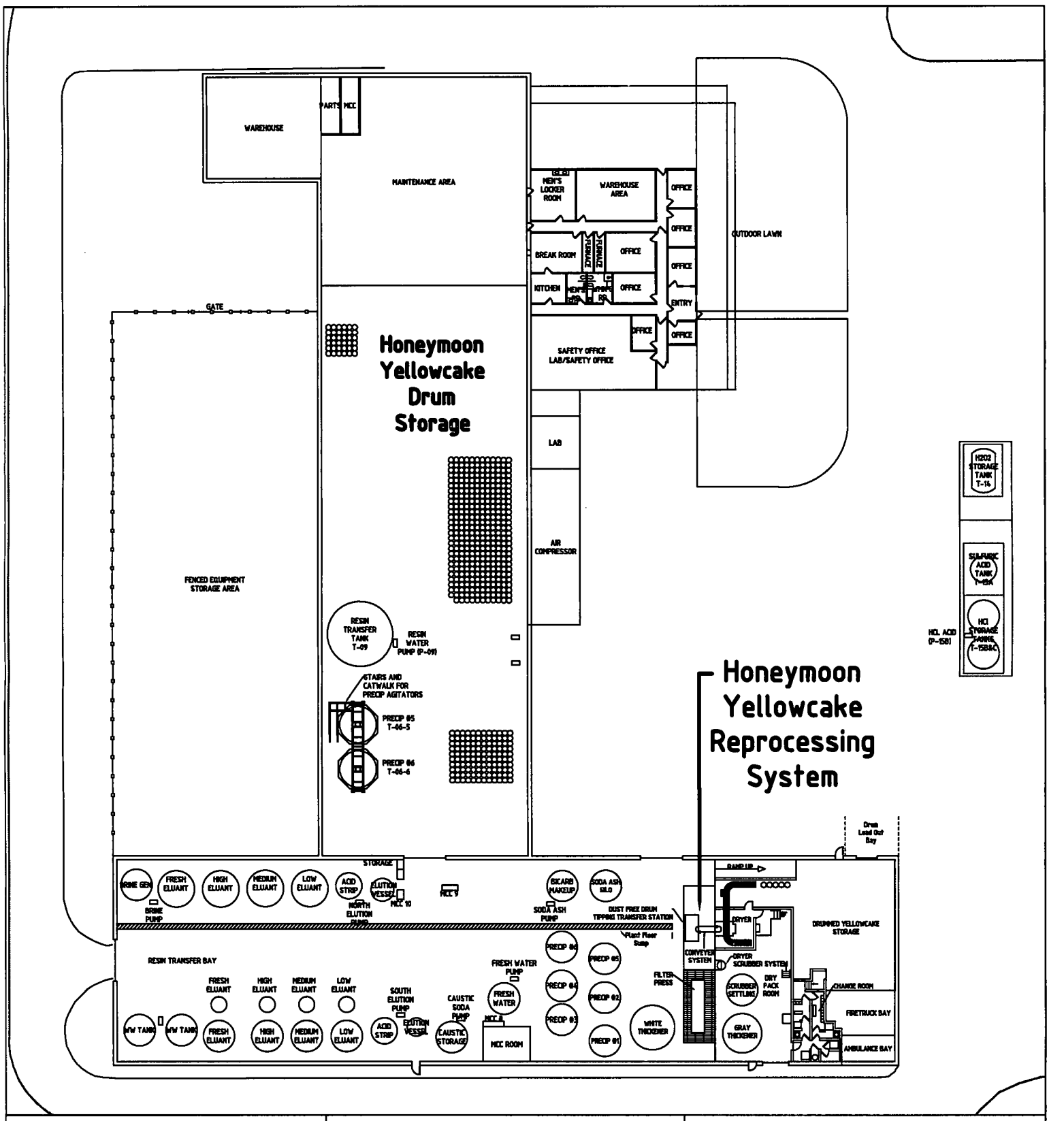

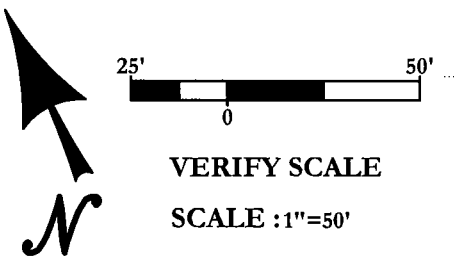

uranium one™
investing in our energy

Irigaray Processing Facility
General Plant Arrangement

Date:10/25/10	By:CM	Checked:	Approved:

Rev. No.	Description	Date	By
0	Initial Draft	10/25/10	CM
1	Added Addt'l Precip Tanks	01/24/12	CM
2	Drum Tipping & Transfer Station	2/6/2014	TM

Project Name:	Figure #	REV
WILLOW CREEK	3.10	2

uraniumone™
investing in our energy
907 North Poplar St., Suite 260 ,Casper, WY 82601 307-234-8235

Figure 3.10a
Irigaray Plant
Drum Tipper and Hopper Enclosure

Date: 6/26/2014	By: TM	Checked:	
Rev. No.	Description	Date	By

Sheet: 3.10a

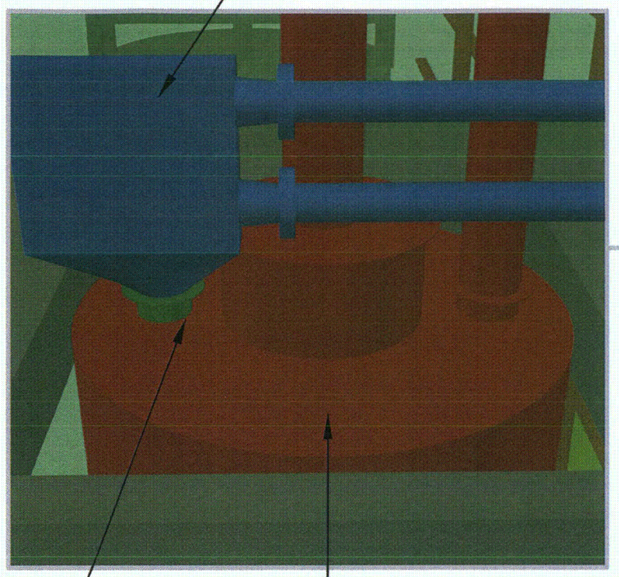

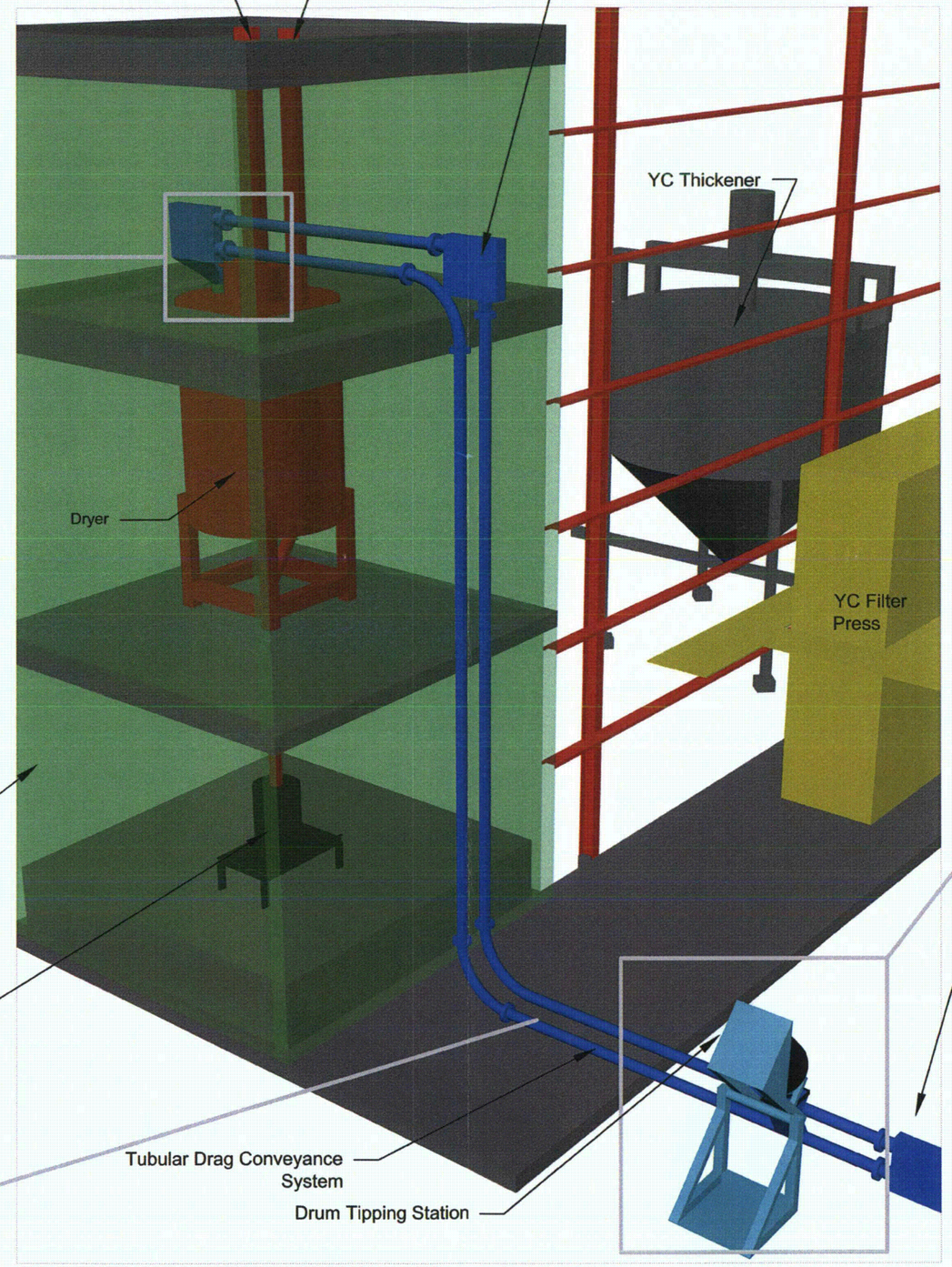

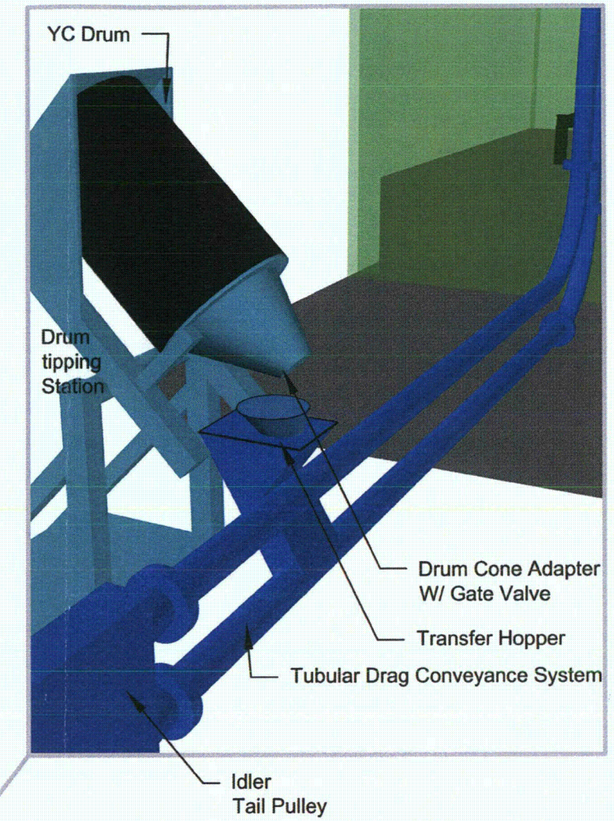

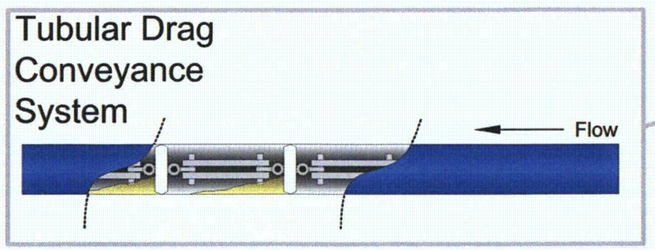

uranium one™
investing in our energy

Honeymoon Yellowcake
Reprocessing System

Date: 2/24/2014	By:	Checked:	Approved:

Rev. No.	Description	Date	By
0			
1			
2			
3			

Project Name:	Figure #	REV
WILLOW CREEK	3-10b	0

the dried uranium product is packaged in drums for shipment. The off-gas discharge from the dryer is scrubbed with a high intensity Venturi scrubber to remove contaminants prior to discharge to the atmosphere. The scrubber maintains a 95% to 99% efficiency for removal of uranium particulates. Spent scrubber solutions are recycled back to the precipitation circuit to recover uranium captured during the scrubbing. The stack discharge to the atmosphere consists of essentially water vapor and small quantities of uranium fines.

Packaging of the dried product occurs on a continuous basis during the drying campaign. The dried product exits the bottom hearth of the dryer through a delumper and a rotary valve into 55 gallon drums (DOT approved). The system is equipped with a dust collection baghouse for personnel protection and dried product recovery. Air from the baghouse dust collection system is routed to the off-gas line from the dryer, which is drawn into the high-intensity Venturi scrubber through an induction fan. Through the scrubber and induction fan system, a vacuum is created, thus containing airborne uranium inside the dryer enclosure.

The yellowcake dryer was installed at the Irigaray plant in 1979, and operated briefly through 1981. When the dryer was initially operated in 1980, the unit was operated as a calciner, i.e. high temperature fired. The yellowcake product was dried at approximately 1600° F, in order to "burn-off" contaminants in the yellowcake, such as ammonium and chlorides (ammonium bicarbonate was used in the precipitation system at that time). As the product is now precipitated with hydrogen peroxide, operations at such high temperatures are not necessary. The hydrogen peroxide precipitation technique forms a superiorly clean cake which is again washed in the filter press prior to drying. Few contaminants will be present when the yellowcake enters the dryer, which in turn will reduce emissions from the scrubber stack.

Based on a performance test of the scrubber after the dryer was refurbished and first started in December, 1994, the WDEQ issued Operating Permit No. OP-254 for the dryer emissions. Several conditions were placed on the permit including a 0.30 lb./hour restriction for particulate emissions from the scrubber, and the following limits for the scrubber pressure loss (or gain), and the scrubbing liquid flow rate:

Liquid Flow Range Allowance:	21.4 to 39.6 gpm
Gas Pressure Differential Range Allowance:	37.1 to 68.9 inches of water

Uranium One will abide by these permit conditions, unless future stack testing proves that different limits should be used and the WDEQ permit is amended.

Toll-drying of Yellowcake

The dryer was re-furbished in late 1994 and is used to dry yellowcake product from Christensen Ranch. The dryer is capable of operating at a rate of 300 pounds per hour, or approximately 2.6 million pounds of throughput per year. The dryer is also permitted with the WDEQ for this rate through Operating Permit No. OP-254. It is estimated that during

peak periods of production, the Christensen Ranch may produce up to 1 million pounds per year of uranium product which will be dried. COGEMA may wish to dry up to an additional 1.5 million pounds per year of yellowcake product from other uranium licensees. MILDOS modeling has been performed at the 2.5 million pound throughput and no significant increases in exposures to the general public have been seen as a result of this level of drying.

In the past the Irigaray plant received yellowcake slurry from our Texas operations for drying. Shipments of slurry were received in exclusive-use slurry transport trailers. Upon arrival, the slurry trailer entered the old portion of the plant through an overhead door directly adjacent to the northern-most yellowcake storage tank (see Figure 3.9, General Arrangement Diagram). The slurry was then pumped to one of the two yellowcake storage tanks (previous calcium clarifiers), using flexible hoses and a diaphragm pump. Excess decant and wash water from the unloading process was routed either to the on-site evaporation ponds as waste, or to the yellowcake processing area for filtration. Future receipt of outside yellowcake slurry likely would require the acquisition of additional storage tanks due to the loss of capacity from recent plant decommissioning activities.

Uranium One is re-processing approximately 1032 drums or approximately 550,000 pounds of dried yellowcake for Uranium One's Honeymoon ISR Australian operations. Re-processing of this yellowcake is necessary to reduce the organic content to a level which will be acceptable to the converter facilities for further processing. The method used for re-processing this material is as follows:

Dry Transfer: Honeymoon yellowcake will be transferred dry by a dust free drum tipping system and associated enclosed tubular drag conveyor directly into the Willow Creek yellowcake dryer for re-processing. Since dry materials are being introduced to the dryer the current dryer retention time of 4.5 associated with a wet slurry feed will not be necessary for the dry Honeymoon yellowcake. Dryer retention time for this product would be the time required to burn off the organic contaminants to acceptable levels for further re-processing at the converter facilities. Uranium One does not intend to run yellowcake slurry and the Honeymoon dry material through the dryer concurrently but plan to run the Honeymoon material on a batch or campaign basis separate from Irigaray yellowcake slurry operations.

Uranium One has conducted analysis of the Honeymoon material and determined the proposed re-drying of the material is compatible both chemically and mechanically with the Willow Creek uranium recovery process.

Additional equipment needed to complete the re-processing actions are shown in the updated Irigaray Process Flow Diagram (Figure 3.11) and Irigaray General Plant Arrangement (Figure 3.10). An additional figure Honeymoon Re-processing System (Figures 3.10a and 3.10b) have been added to show a general location, equipment utilized for the re-drying and the enclosure and ventilation system used to isolate the system from the general plant process area.

The re-processing system is broken down into three (3) steps for the handling and re-drying of the Honeymoon yellowcake material.

Material Handling: The first phase of the Honeymoon yellowcake re-drying process will be to transfer the yellowcake to a tubular drag conveyance system which will feed the yellowcake into the top of the Irigaray dryer. Uranium One will utilize a dust free drum tipping system to transfer the yellowcake from the 55 gallon drums to the tubular drag conveyance system. The drum tipping system was manufactured by the Materials Transfer and Storage ("MTS") Company of Allegan, Michigan. The drum tipping system to be employed at the Irigaray facility has been designed specifically to transfer yellowcake from the drums to the tubular drag conveyance system with little to no dust generated. The drum tipping system is manufactured with a number of safeguards designed into the operation of the unit. The system safeguards and interlocks are discussed below.

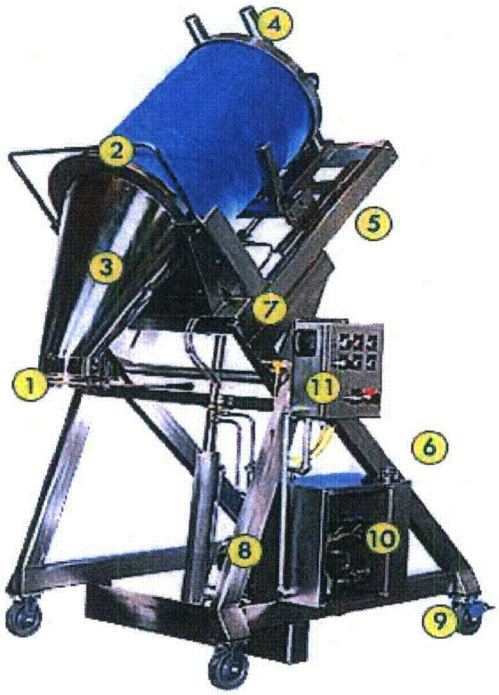

The process starts when a full drum is placed in the vertical starting position on the system's carriage plate (4), located at the base of the carriage system (4), (5) &(7).

The cone adaptor (2) & (3) is sealed on to the drum by pneumatic pressure. A full drum is pneumatically raised up (approximately 6"-10") to the cone adaptor. When the cone adaptor and drum meet, a spike in pressure triggers a switch to close, maintaining high pneumatic pressure (approximately 800 psi) creating a tight, dust–free, seal (2) between the drum and the cone adaptor. The system is interlocked such that a drum cannot rotate from the starting vertical position unless the drum seal is complete and locked. Only after the seal is complete can the drum then be allowed to rotate approximately 180° to the full pivot position (as shown in the diagram), where it will seal with the receiving flange of the hopper (1). The cone adaptor is equipped with a vibrator to maximize the transfer

of all yellowcake from the drum and cone adaptor. There are two valves controlling the discharge of yellowcake from the drum to the hopper.

All operations of the system will be controlled by a single operator. As an added safety feature the operator cannot operate the unit unless two control panel switches are engaged simultaneously requiring the use of both hands. The cone adaptor discharge valve will not open unless the level sensor in the hopper indicates there is adequate volume in the hopper (10 ft^3) to hold the contents of a drum.

The safeguards and interlocks on the drum tipping system are designed to prevent the dropping of a drum, and of workers being injured or exposed to yellowcake during the transfer from the 55 gallon drums to the tubular drag conveyance system. The Honeymoon yellowcake is currently contained in 55 gallon drums.

In an effort to further minimize potential employee exposures Uranium One will isolate the drum tipping system from the general plant with a temporary enclosure and separate HEPA ventilation system as shown in Figure 3.10a. The proposed HEPA ventilation system will maintain a negative pressure on the enclosure and provide an air exchange approximately every 5 minutes for the enclosure. Uranium One will have standard operating procedures ("SOP's") developed prior to start-up of the Honeymoon re-drying program that will address industrial safety, radiological and maintenance/contingency protocols to be followed.

Materials Transfer: The second phase of the operations begins when the drum tipping unit attaches to the receiving flange of the hopper. After the seal between the cone adaptor and the hopper is complete, the discharge valve on the cone adaptor as well as a valve on the receiving hopper can then be allowed to open. The design will not allow the drum to reverse/rotate back to the vertical position unless the discharge valves on the cone adaptor and the hopper are in the closed position.

A rotary feed valve at the bottom of the hopper can be adjusted to control the desired feed rate to the tubular drag conveyor to eliminate the potential for overfilling the conveyor system. The feed rate to the tubular conveyor system is adjustable to allow the system feed to the dryer/calciner to be varied dependent on operational parameter needs. The potential for plugging of the tubular drag conveyor system is very unlikely and would be limited to two potential causes:

First, although unlikely, a foreign object enters the system. If this occurs, the blockage will almost always occur in the rotary feed valve. If the object gets through the feed valve, blockage could occur at the first 90 degree turn. The tubular drag conveyor system has a reverse included for this reason to help the system unbind without having to open the system up for repairs. The tubular drag conveyor has seven (7) cleanout locations should it be necessary to access the system for repairs or further clean-out for the foreign object. Any maintenance work to the tubular drag conveyor system will be conducted under a Radiation Work Permit ("RWP").

Second the feed material characteristics change (i.e. material is wet and causes plugging). The Honeymoon yellowcake has a consistent feed characteristic that is not likely to change. The drum tipping system and tubular drag conveyor are enclosed systems with minimal potential for entry of water. Uranium One will address precautions for operations to utilize when performing wash downs in drum tipping stations area in the SOP.

A level sensor in the hopper will notify the operator of when a drum is empty. The cone adaptor is equipped with a vibrator to maximize the transfer of all yellowcake from the drum and cone adaptor into the enclosed tubular drag conveyor system.

The tubular drag conveyor then transfers (in an enclosed system) the yellowcake approximately 32' up the outside wall of the dryer/packaging enclosure then enters through an opening in the enclosure wall to the top of the Irigaray yellowcake dryer. The yellowcake is then fed into the top hearth of the dryer through the flange currently utilized to feed yellowcake slurry from the thickeners.

Re-Drying:

Drying temperature of the Honeymoon material is anticipated to be between 300C and 500C to successfully remove the organic contamination present in the product. The yellowcake retention time in the dryer is anticipated to be between 1 to 2 hours, but will be adjusted based on the concentration of organic in the final product exiting the dryer.. Actual dryer temperature and retention ranges will be provided in the SOP specific to the Honeymoon yellowcake re-drying.

Operations for the re-drying of the Honeymoon yellowcake once material enters into the dryer are conducted with existing equipment that was reviewed as part of the approved process for the May 2008 LRA.

3.4.1.5 Vanadium Separation

Recovery solution and yellowcake analysis from the Christensen Ranch operations has indicated that vanadium will co-leach with uranium during the mining process of portions of the Christensen Ranch ore body. Vanadium is also extracted onto the IX resin during the recovery solution processing. Vanadium is an undesirable constituent in the yellowcake product, therefore, it may become necessary to remove the vanadium prior to drying the Christensen Ranch yellowcake. This will only become necessary if the vanadium content reaches a level where the uranium refineries will penalize the product due to excessive levels of vanadium.

If vanadium removal from the Christensen Ranch product is necessary, a specialized circuit will be installed at the Irigaray central plant. Equipment required for the vanadium separation will consist of two precipitation tanks, two smaller tanks for chemical additions and solution overflow and a vanadium filter press. The vanadium separation equipment will be located in the old plant area next to one of the clarifier units used for yellowcake storage.

The vanadium removal process is very similar to that used for uranium processing. After elution of the Christensen resin, the high pregnant solution will be discharged from the elution unit to a high pregnant surge tank. The solutions would then be

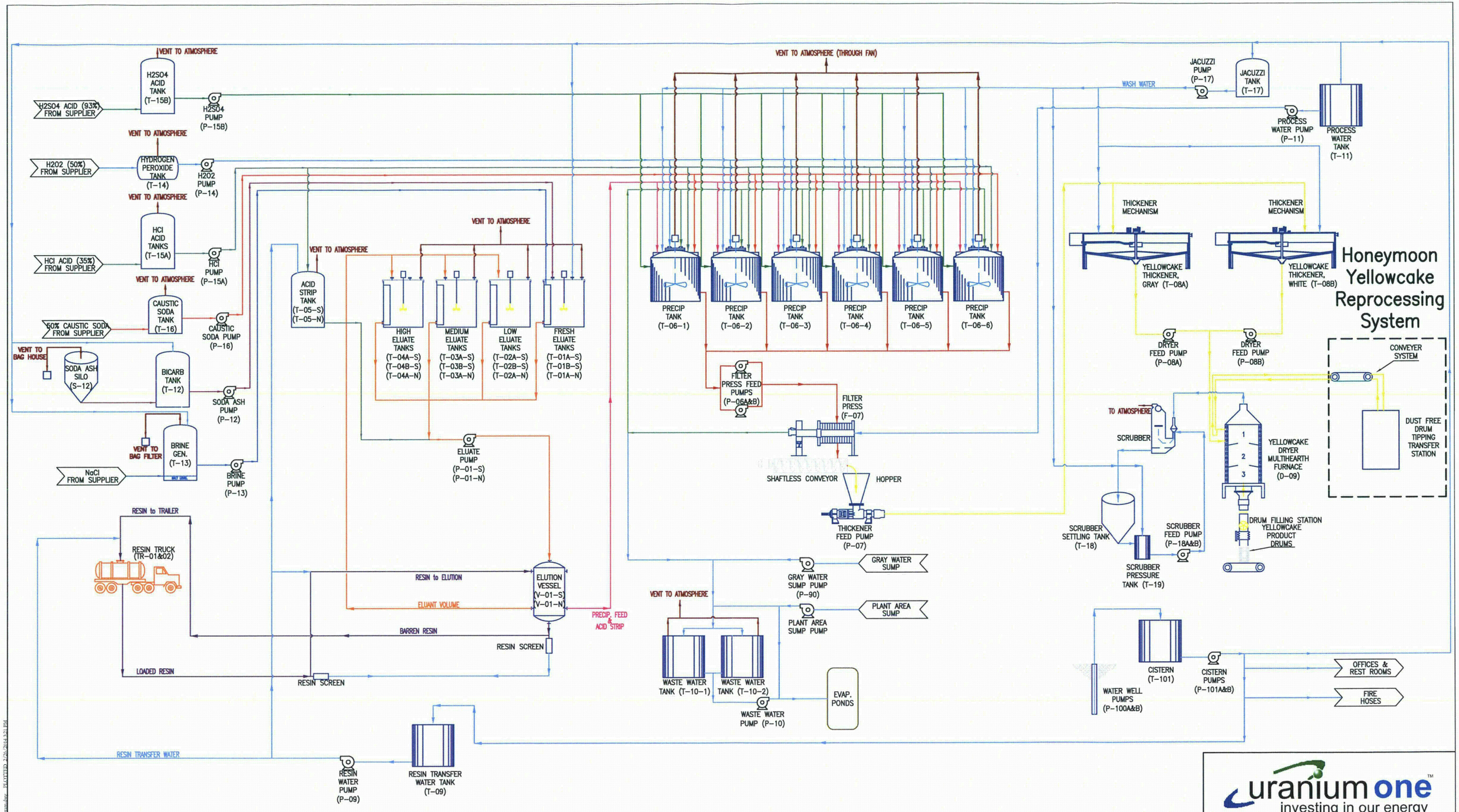

uranium one™
investing in our energy

Irigaray Processing Facility
Process Flow Diagram

Date:02/20/10	By: CM	Checked:	Approved:

Rev. No.	Description	Date	By
1	Scrubber Tank/Pump Adj	10/07/10	CM
2	Plant Area Sump Added	10/14/2010	CM
3	Updated Elution Circuit for N&S	11/17/2010	CM
4	Drum Tipping & Convever Added	2/6/2014	TM

Project Name:	Figure #	REV
WILLOW CREEK	3.11	4

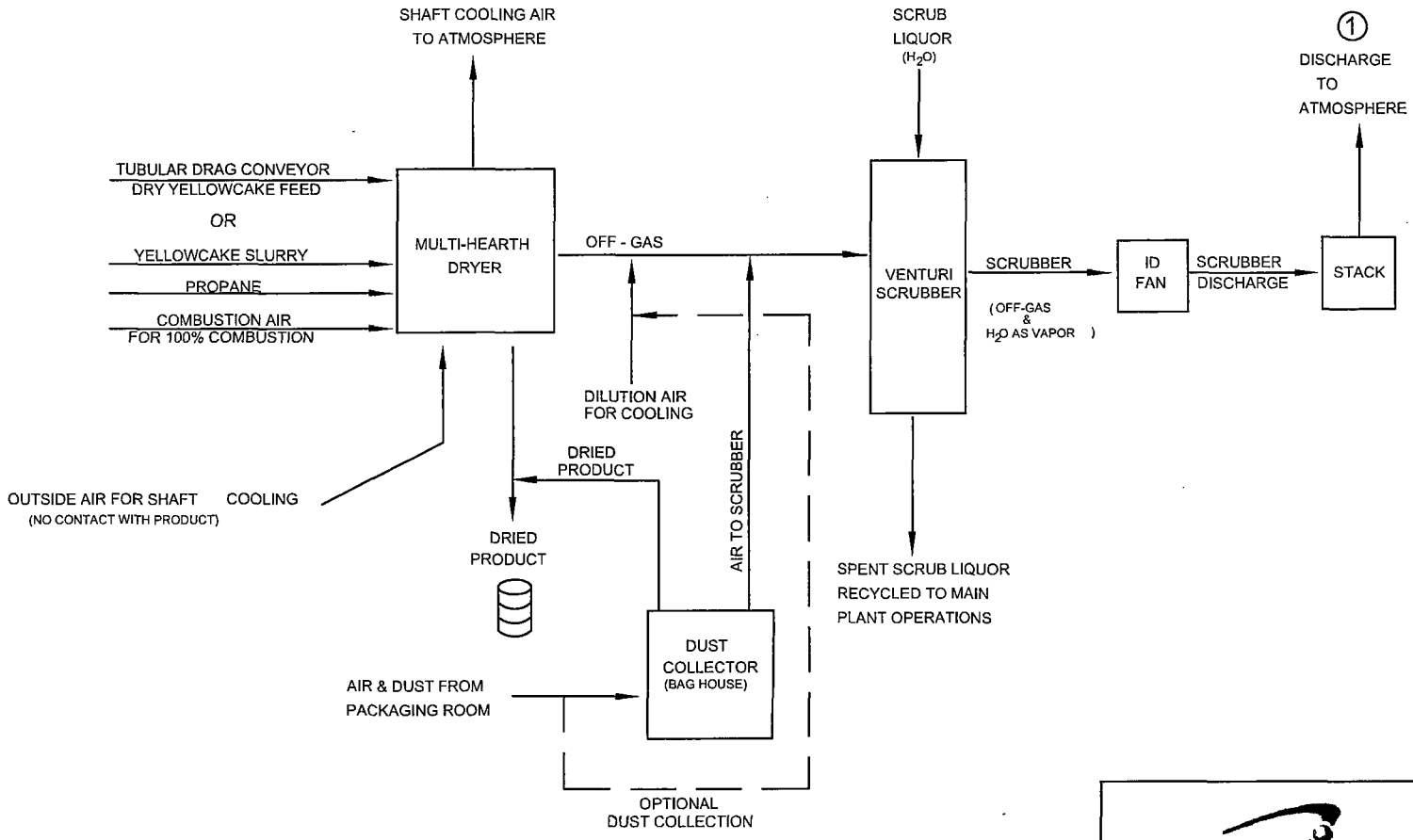

1 EMISSION POINT FOR DRYING & PACKAGING UNIT

uraniumone™
investing in our energy

Figure 4.1
Irigaray Process Unit
Drying/Packaging Unit Schematic

Geology: Enviro: *Drafting: RMO* Date: May, 2008 Revision: June 12, 2014	State: Wyoming County: Johnson: Scale: *Drawing ID: FIG IR Dryer Schematic.dwg*

occurring prior to conception. The intake for the declared pregnant woman will be determined as discussed in Sections 5.7.4.1 and 5.7.4.2.

Honeymoon Yellowcake Solubility Classifications – The Honeymoon dryer was operated at 150°C (302°F), so that the batch or charge reached a maximum temperature of 90°C (194°F). The color of the Honeymoon material is yellow which is consistent with a low fired product. Regulatory Guide 8.30 Section 2.2 states in part: "For compliance purposes, yellowcake dried at 400°C (753°F) and above should be classified as insoluble". Operating temperatures of the Honeymoon Dryer are consistent with other rotary dryer operations that classify their yellowcake as Class D or soluble material.

Material feed into the drum tipping station will be classified as Class D or soluble for occupational exposure purposes. This is consistent with the classification at Irigaray for all process areas prior to the dryer.

Because Uranium One does not propose to run solubility classification testing on the Honeymoon yellowcake a conservative approach has been taken to classify all emissions once the material is feed into the dryer as Class Y or insoluble for the Drum Packaging Room, Furnace Areas, YC Control Room Area and YC Stack Discharge Emissions as depicted in Table 5.6.

The current classification for Willow Creek produced yellowcake is 85% Class D and 15% Class W which is based on solubility testing conducted at a drying temperature of 538°C (1000°F) and 649°C (1200°F) respectively.

Honeymoon Re-drying

Uranium One will use the solubility classification and corresponding ALI and DAC provided in Table 5.6 when calculating employee exposures during periods when the Honeymoon yellowcake is being re-processed.

Breathing Zone Sampling

Breathing zone sampling is performed to determine individual exposure to airborne uranium during certain operations. Sampling is performed with an MSA pump or equivalent. The air filters are counted and compared to the DAC using the same method described for area sampling. Air samplers are calibrated at least every six months.

Historical Program Results

Table 5.3 provides the results of monitoring for airborne uranium from the period of 1995 through 2007. Average and maximum airborne gross alpha activity for this period shows concentrations of uranium which were very low percentages of the DAC. The data demonstrate that engineering controls were effective. The insignificant increase in airborne uranium in the last few years likely relates to various decommissioning activities being conducted at the time.

Proposed In-Plant Airborne Uranium Monitoring Program

Uranium One proposes to continue the same airborne uranium monitoring program at Irigaray and Christensen Ranch that has been performed to date.

Airborne sampling will be performed on a monthly basis and will implement the guidance contained in USNRC Regulatory Guide 8.25, "Air Sampling in the Workplace." Uranium One requires continuous sampling in the dry pack area when the dryer is in operation. Sample frequency will return to monthly grab samples if the dryer is not in operation and samples taken outside the furnace/drum loading rooms are less than 10% of the DAC for natural uranium.

Sampler calibration will be performed annually or at the frequency recommended by the manufacturer, whichever is more frequent, as required in SUA-1341.

TABLE 5.6
PROPOSED URANIUM SOLUBILITY CLASSIFICATIONS AND CORRESPONDING DAC, ALI AND AIRBORNE EFFLUENT CONCENTRATIONS FOR IRIGARAY YELLOWCAKE PRODUCT

PROCESS PLANT AREA	URANIUM-NATURAL SOLUBILITY CLASSIFICATION	OCCUPATIONAL INHALATION VALUES		EFFLUENT CONCENTRATIONS
		ALI (µCi)	DAC (µCi/ml)	Air (µCi/ml)
All processes prior to the dryer	Class D	1E+0	5E-10	NA
Honeymoon material prior to the dryer	Class D	1E+0	5E-10	NA
Drum Packaging Room, Furnace Areas, Control Room	85% Class D 15% Class W	1E+0	4.7E-10	NA
Honeymoon material Packaging Room, Furnace Areas, Control Room	100% Class Y	5E-2	2E-11	NA
Stack Discharge - Environmental Air Monitoring Stations	50% Class D 50% Class W	NA	NA	1.9E-12
Honeymoon Stack Discharge - Environmental Air Monitoring Stations	100% Class Y	NA	NA	9E-14