REGULATORY INFORMATION DISTRIBUTION SYSTEM (RIDS)

ACCESSION NBR: 8711060154 DOC. DATE: 87/10/30 NOTARIZED: YES DOCKET #
FACIL: 50-261 H. B. Robinson Plant, Unit 2, Carolina Power & Light C 05000261
AUTH. NAME AUTHOR AFFILIATION
ZIMMERMAN, S. R. Carolina Power & Light Co.
RECIP. NAME RECIPIENT AFFILIATION
Document Control Branch (Document Control Desk)

SUBJECT: Forwards response to plant-specific requirements of ATWS SER based on Westinghouse design for ATWS mitigation sys actuation circuit. Proprietary rept EIP-QR-002 "Series SC993 Class 1E Single..." also encl. Withheld (ref 10CFR2.790).

DISTRIBUTION CODE: PA01D COPIES RECEIVED: LTR 1 ENCL 1 SIZE: 26+109
TITLE: Proprietary Review Distribution-Operating Reactor

NOTES: See Reports

	RECIPIENT ID CODE/NAME		COPIES LTTR	COPIES ENCL	RECIPIENT ID CODE/NAME		COPIES LTTR	COPIES ENCL
	PD2-1 LA	#4	1	1	PD2-1 PD	#3	1	1
	ECCLESTON, K	#5,6,7	3	3				
INTERNAL:	AEOD/DOA	#8	1	1	AEOD/DSP/TPAB	#2	1	1
	OGC/HDS1	#9	1	0	REG FILE	#1	1	1
EXTERNAL:	LPDR		1	0	NRC PDR		1	0

TOTAL NUMBER OF COPIES REQUIRED: LTTR 11 ENCL 8

CP&L

Carolina Power & Light Company

OCT 30 1987

SERIAL: NLS-87-219

United States Nuclear Regulatory Commission
ATTENTION: Document Control Desk
Washington, DC 20555

H. B. ROBINSON STEAM ELECTRIC PLANT, UNIT NO. 2
DOCKET NO. 50-261/LICENSE NO. DPR-23
PLANT-SPECIFIC AMSAC SUBMITTAL

Gentlemen:

The Nuclear Regulatory Commission's (NRC) Safety Evaluation Report (SER) accepting the generic Westinghouse design for an ATWS Mitigation System Actuation Circuit (AMSAC) system identified a number of aspects of the design which would require more detailed, site-specific information in order to conduct an appropriate review. This site-specific information for Carolina Power & Light Company's (CP&L) H. B. Robinson Steam Electric Plant, Unit No. 2 (HBR2) is provided in Attachment 1 to this submittal per the revised schedule agreed upon with the NRC Project Manager (October 30, 1987).

At this stage of the project, most of capabilities, features, and design parameters of the proposed AMSAC System have been finalized. A vendor has recently been selected and final, detailed design is underway to incorporate the selected system into the HBR2 application.

In response to the information requested concerning electrical isolation equipment, CP&L is enclosing a copy of the Qualification Report for the device selected. Energy Incorporated considers the information contained in this report to be proprietary in nature. Therefore, it is being submitted pursuant to the provisions of paragraph (b)(1) of 10CFR2.790. In accordance with the provisions of that section, an application for withholding from public disclosure accompanied by an appropriate affidavit executed by Energy Incorporated management has been included as Attachment 2 to this submittal.

Due to the schedule restrictions necessary to ensure that the system can be installed in the next refueling outage (currently scheduled for August 1988), CP&L must proceed with the detailed design phase of the project prior to obtaining NRC approval of the plant-specific application. Therefore, CP&L requests that the NRC review this design and provide feedback as to its acceptability as soon as possible in order to minimize possible design rework and any potential for impact upon the implementation schedule.

If you have any questions concerning this matter, please contact Robert W. Prunty at (919) 836-7318.

8711060154 871030
PDR ADOCK 05000261
P PDR

Yours very truly,

S. R. Zimmerman
Manager
Nuclear Licensing Section

MDM/pp (5305MDM)

Enclosures

cc: Dr. J. Nelson Grace
Mr. K. Eccleston
Mr. H. Krug

PA01

411 Fayetteville Street • P. O. Box 1551 • Raleigh, N. C. 27602

ATTACHMENT

RESPONSE TO PLANT-SPECIFIC REQUIREMENTS
OF ATWS SAFETY EVALUATION REPORT

On July 7, 1986, the NRC issued their Safety Evaluation Report (SER) approving the Westinghouse Owners' Group (WOG) prepared Topical Report WCAP 10858A "AMSAC Generic Design Package." That SER granted generic approval of three plant monitoring options which Westinghouse plants could use to fulfill the requirements of 10CFR50.62, "Requirements for Reduction of Risks from Anticipated Transients Without Scram (ATWS) Events for Light-Water-Cooled Nuclear Power Plants." Individual plant approvals were withheld contingent upon receipt and approval of more detailed information concerning the site-specific implementation of one of the approved generic approaches.

Each of the plant-specific information requests specified by the SER is restated below along with the response applicable to the H. B. Robinson design. To facilitate review, this discussion of specific aspects of the design has been prefaced with a general description of the system and equipment selected for the HBR2 application. Since the final design is not complete, the information included in this text is intended to convey the philosophy and design objectives. Significant deviations from this information that may evolve during final design will be conveyed to the NRC.

GENERAL SYSTEM DESCRIPTION

The ATWS Mitigation System Actuation Circuitry (AMSAC) system will provide a means to automatically trip the turbine and actuate auxiliary feedwater flow in the event of a complete loss of feedwater transient. Westinghouse analysis, documented in WCAP 8330, has demonstrated that this is the only ATWS event for which Westinghouse plants with motor driven main feedwater pumps would require AMSAC mitigating action in order to prevent overpressurizing or exceeding DNB limits. The AMSAC system is independent of, and isolated from, the existing Reactor Protection System (RPS) from sensor to output actuation device. The AMSAC setpoints and timer delayed actuation will ensure that the RPS has had time to perform its function before any AMSAC initiated trip. Therefore, the AMSAC signal will be of no consequence unless the RPS has failed.

The H. B. Robinson AMSAC system will utilize the steam generator level monitoring option as defined by Logic 1 of WCAP 10858A. The system will use the outputs from existing steam generator narrow-range level sensors fed into a microprocessor-based AMSAC controller. The AMSAC controller will also monitor turbine first-stage pressure to identify the 40% power level at which the AMSAC must be armed. Class 1E qualified isolators will protect the safety-related circuits currently associated with both of these sets of sensors from any perturbations that could be introduced by malfunctions of the nonsafety related AMSAC circuitry. A timer associated with the AMSAC arming logic will maintain the AMSAC in an armed condition for 90 to 180 seconds after turbine pressure drops below the 40% power level. This will ensure that a turbine trip will not disarm AMSAC before it has had time to initiate auxiliary feedwater flow if the steam generator level criteria are met. During operation, the controller will continuously scan the sensor inputs. The AMSAC system will be armed when the turbine pressure indicates that the plant is above 40% power. If AMSAC is armed and the controller identifies a coincident low level in two out of three steam generators, the controller will actuate a

turbine trip and initiate auxiliary feedwater flow after appropriate timer delay to ensure that it does not preempt the RPS Trip functions. The AMSAC outputs will tie in to the existing safety-related actuation circuits using isolation relays to protect the existing systems from problems induced by AMSAC malfunctions.

The AMSAC controller itself consists of two parallel, redundant, commercial programmable controller units. Either unit will be fully capable of independently performing all AMSAC functions. This programmable controller features an Erasable Programmable Read Only Memory (EPROM) which provides non-volatile memory for the controller's program logic. This feature enables the controller to maintain the program in memory following a loss of power to the unit without reliance upon a battery back-up. Alterations of the program in EPROM would require use of a separate programming device. This feature greatly reduces any possibility of unauthorized program changes in the installed controllers.

The AMSAC Controllers will be housed in a cabinet located in the Unit 1 Cable Spread Room which is in close proximity to the Control Room. Local displays and controls at the cabinet will provide necessary capabilities for testing, calibration, and trouble diagnosis.

An AMSAC bypass switch is provided at the Reactor Turbine Generator Board (RTGB). AMSAC status indication will be provided in the Control Room on the RTGB to inform the operator of AMSAC trip status, arming status, and bypass status. In addition, an "AMSAC Trouble" lamp in the Control Room will alert the operator to anomalies in the AMSAC readings. A simple diagnostic process at the AMSAC panel in the Cable Spread Room would then be initiated to determine the actual nature of the problem. The local panel provides built-in features to facilitate testing and trouble shooting of the system.

PLANT-SPECIFIC INFORMATION SPECIFIED BY SER

1.0 DIVERSITY

The plant-specific submittal should indicate the degree of diversity that exists between the AMSAC equipment and the existing Reactor Protection System. Equipment diversity to the extent reasonable and practicable to minimize the potential for common-cause failures is required from the sensors' output to, but not including, the final actuation device; e.g., existing circuit breakers may be used for the auxiliary feedwater initiation. The sensors need not be of a diverse design or manufacture. Existing protection system instrument-sensing lines, sensors, and sensor power supplies may be used. Sensor and instrument-sensing lines should be selected such that adverse interactions with existing control systems are avoided.

RESPONSE

The proposed H. B. Robinson AMSAC system will be diverse from the existing Reactor Protection System from sensor output to the final actuation devices. Steam generator level signals are taken from the steam generator level narrow-range channels at the Hagan racks (signal processing cabinets) via safety-related isolators. The signals are taken at sensor output before processing (see attached Sketches SK-85-080/00-Z-7003, SK-85-080/00-Z-7004, and SK-85-080/00-Z-7007). Turbine first stage pressure is picked up at the sensor and isolated for AMSAC input (see attached Sketches SK-85-080/00-Z-7005 and SK-85-080/00-Z-7006). The AMSAC logic is

performed separately and independently from the existing Reactor Protection System. AMSAC outputs actuate existing devices via isolation relay contacts (see attached Sketch SK-85-080/00-Z-7000 for safety/nonsafety output relay interfaces). The proposed AMSAC controller will be a digital microprocessor-based system, thereby contributing to diversity from the analog logic of the existing Reactor Protection System.

2.0 LOGIC POWER SUPPLY

The plant-specific submittal should discuss the logic power supply design. According to the rule, the AMSAC logic power supply is not required to be safety related (Class 1E). However, logic power should be from an instrument power supply that is independent from the Reactor Protection System power supplies. Our review of additional information submitted by Westinghouse Owners' Group (WOG) indicated that power to the logic circuits will utilize RPS batteries and inverters. The staff finds this portion of the design unacceptable; therefore, independent power supplies should be provided.

RESPONSE

The proposed AMSAC logic cabinet will be powered from a separate, battery-backed, dedicated AMSAC power supply. This power supply is fed from an instrument bus which is independent of the existing Reactor Protection System (see attached SK-85-080/00-E-3005).

3.0 SAFETY-RELATED INTERFACE

The plant-specific submittal should show that the implementation is such that the existing protection system continues to meet all applicable safety criteria.

RESPONSE

The proposed AMSAC will be electrically isolated at the safety-related sensor inputs and the safety-related outputs. Safety-related isolators will be used on AMSAC inputs and isolation relays with physical separation of safety/nonsafety-related wiring on AMSAC outputs provided (see attached Sketches SK-85-080/00-Z-7000 and -Z-7001). This will allow the existing Reactor Protection System to continue to meet all applicable safety criteria.

4.0 QUALITY ASSURANCE

The plant-specific submittal should provide information regarding compliance with Generic Letter 85-06, "Quality Assurance Guidance for ATWS Equipment that is not Safety-Related."

RESPONSE

A. Nonsafety Related

QA guidance for nonsafety-related AMSAC equipment has been provided by the NRC through Generic Letter 85-06. This guidance parallels the requirements for radioactive waste management system provided in Section 19 of the CP&L Corporate Quality Assurance Program (CQAP).

Therefore, all activities related to design, procurement, installation, and testing of nonsafety-related AMSAC equipment will be controlled in accordance with Section 19 of the CQAP.

Record keeping for design control and modification of existing plant systems will comply with the requirements of 10CFR50.59.

B. Safety Related

All activities related to the design, procurement, installation, and testing of equipment which interfaces directly with existing safety-related systems, will comply with the requirements of Sections 1 through 17 of the CQAP and the applicable procedures in Sections 3.0 (Engineering Procedures) and 4.0 (Procurement of Engineering Items) of the NED Procedures Manual. Reference 10CFR50, Appendix B.

AMSAC is not required to be safety related nor to meet IEEE-279. However, the implementation will incorporate good engineering practice and will be such that the existing protection system continues to meet applicable safety-related criteria. Devices isolating AMSAC from the Reactor Protection System will meet the isolation device requirements of IEEE 279-1971.

5.0 MAINTENANCE BYPASS

The plant-specific submittal should discuss how maintenance at power is accomplished and how good human factors engineering practice is incorporated into the continuous indication of bypass status in the Control Room.

RESPONSE

Maintenance bypass will be accomplished by disabling the output of the AMSAC controller units with a permanently installed hard-wired switch in series with the nonsafety-related AMSAC processor output relay contacts. Bypass indication will be displayed on the RTGB and on the AMSAC panel. In addition, either programmable controller could be unplugged and removed from the AMSAC controller cabinet or replaced while the other AMSAC controller maintains full AMSAC capability. Maintenance bypass at power will not involve lifting leads, pulling fuses, tripping breakers, or physically blocking relays. Control room modifications associated with AMSAC will be consistent with existing Control Room design philosophy. Formal human factors review will be conducted as a normal part of the plant modification process in accordance with the provisions specified within the HBR2 Detailed Control Room Design Review Summary Report.

6.0 OPERATING BYPASS

The plant-specific submittal should state that operating bypasses are continuously indicated in the Control Room; provide the basis for the 70% or plant-specific operating bypass level; discuss the human factors design aspects of the continuous indication; and discuss the diversity and independence of the C-20 permissive signal (Defeats the block of AMSAC).

RESPONSE

Bypass indication will be continuously indicated in the Control Room on the RTGB. The C-20 permissive signal will be taken from first-stage turbine pressure through safety-related isolators thereby maintaining separation from existing Reactor Protection System circuitry (see attached Sketches SK-85-080/OO-Z-7000 and SK-85-080/OO-Z-7005). Two turbine pressure inputs will be required to enable AMSAC. The power level for enabling of AMSAC will be 40% as outlined in WOG Letter WOG-87-086 dated April 14, 1987. Formal human factors review will be conducted as a normal part of the plant modification process in accordance with the provisions specified within the HBR2 Detailed Control Room Design Review Summary Report.

7.0 MEANS FOR BYPASSING

The plant-specific submittal should state that the means for bypassing is accomplished with a permanently installed, human-factored bypass switch or similar device and verify that disallowed methods mentioned in the guidance are not utilized.

RESPONSE

The means for manually bypassing ATWS will be a permanently installed, human-factored bypass switch located locally at the RTGB. Bypass indication will be at the local panel and the RTGB. Bypassing will not involve pulling fuses or lifting internal wiring. Switches and indication installed on the RTGB will be of the same design philosophy as equipment presently in service. Formal human factors review will be conducted as a normal part of the plant modification process in accordance with the provisions specified within the HBR2 Detailed Control Room Design Review Summary Report.

8.0 MANUAL INITIATION

The plant-specific submittal should discuss how a manual turbine trip and auxiliary feedwater actuation are accomplished by the operator.

RESPONSE

Manual initiation of a turbine trip at H. B. Robinson Plant is presently accomplished by depressing the "Think" and "Turbine Trip" buttons simultaneously from the RTGB.

Initiation of auxiliary feedwater is accomplished from the Control Room as follows:

- For Motor-Driven Auxiliary Feedwater Pumps

  1) Start selected pump(s)

  2) Open appropriate auxiliary feedwater header discharge valve to align flow to affected steam generator(s).

- For steam-driven auxiliary feedwater pump

  1) Start pump by placing steam shut-off valve in OPEN position.

  2) Open appropriate auxiliary feedwater header discharge valve to align flow to affected steam generators.

9.0 ELECTRICAL INDEPENDENCE FROM EXISTING REACTOR PROTECTION SYSTEM

The plant-specific submittal should show that electrical independence is achieved. This is required from the sensor output to the final actuation device at which point nonsafety-related circuits must be isolated from safety-related circuits by qualified Class 1E isolators. Use of existing isolators is acceptable. However, each plant-specific submittal should provide an analysis and tests which demonstrates that the existing isolator will function under the maximum worst-case fault conditions. The required method for qualifying either the existing or diverse isolators is presented in Appendix A.

RESPONSE

Isolation relays will be used for the nonsafety to safety-related interface on AMSAC outputs. Nonsafety AMSAC outputs will energize the coils of the isolation relays with the relay contacts initiating ATWS mitigation in safety-related circuits. Relay panel wiring will be physically separated safety from nonsafety. These relays will be seismically and environmentally qualified.

Safety-related signals for ATWS input will be taken from existing sensors with safety-related isolators. Cabling and conduits will be separated from existing Reactor Protection System equipment to the AMSAC controller. Specific responses to the Appendix A information requests are provided below for the signal input isolation devices.

RESPONSE TO APPENDIX A

ISOLATION DEVICES

Signal isolators for inputs to the proposed AMSAC system are presently planned to be Class 1E qualified units supplied by Energy Incorporated. These series SC993, Class 1E isolators are very similar to units that have been used for several safety-related modifications at H. B. Robinson Plant, Unit 2 with favorable results. The Appendix A information requests are restated below followed by the response pertaining to these input isolation devices. The response references the enclosed Qualification Report (proprietary) from Energy Incorporated.

INFORMATION REQUEST A

For the type of device used to accomplish electrical isolation, describe the specific testing performed to demonstrate that the device is acceptable for its application(s). This description should include elementary diagrams when necessary to indicate the test configuration and how the maximum credible faults were applied to the devices.

RESPONSE

The following tests have been performed on the Energy Incorporated Class 1E single channel analog encapsulated isolator:

1.	Calibration Test - EI Procedure EIP-34, Page 9 of 27	
2.	DC Isolation Test	Figure 1 and page 10 of E1 Procedure
3.	Bandwidth Test	Figure 3 and page 11 of E1 Procedure
4.	Linearity Test	Page 10 of E1 Procedure
5.	Common Failure Isolation Test	Figure 4 and page 13 of E1 Procedure
6.	Surge Withstand Test	Figure 5 and page 14 of E1 Procedure
7.	Temperature Test	Page 12 of E1 Procedure
8.	Power Supply Test	Figure 6 and page 16 of E1 Procedure
9.	AC Isolation Test	Figure 2 and page 11 of E1 Procedure

INFORMATION REQUEST B

Data to verify that the maximum credible faults applied during the test were the maximum voltage/current to which the device could be exposed, and define how the maximum voltage/current was determined.

RESPONSE

Steam generator level and turbine pressure signals are 4-20 milliamp loops. The isolator takes its input signals from the signal loop and generator a 4-20 milliamp output. The maximum credible fault condition postulated for this application would involve some low probability undetermined mechanism which would short the 120 volts AC power supply for the isolator or the AMSAC cabinet across the output circuit from the isolator. The maximum voltage expected from this 120 VAC power source was conservatively established as 130 volts. The capability of the isolator to withstand such a fault is demonstrated by the Common Failure Isolation Test and the Surge Withstand Test. These tests also demonstrate the isolators performance for failure modes involving a short across the isolator output circuit or an open output circuit.

INFORMATION REQUEST C

Data to verify that the maximum credible fault was applied to the output of the device in the transverse mode (between signal and return) and other faults were considered (i.e., open and short circuits).

RESPONSE

For test results see Data Sheets 1-8 of the enclosed EI Qualification Report.

INFORMATION REQUEST D

Define the pass/fail acceptance criteria for each type of device.

RESPONSE

See Acceptance Criteria 9.0, page 17 of 27 of the Qualification Report.

INFORMATION REQUEST E

Provide a commitment that the isolation devices comply with the environmental qualifications (10CFR50.49) and with the seismic qualifications which were the basis for plant licensing.

RESPONSE

The isolators will be installed in a mild environment, as defined by 10CFR50.49, well within the test parameters of the temperature test. The seismic qualification calculations for the Energy Incorporated isolator will envelop the H. B. Robinson response spectrum at the proposed installed location.

INFORMATION REQUEST F

Provide a description of the measures taken to protect the safety systems from electrical interference (i.e., Electrostatic Coupling, EMI, Common Mode and Cross Talk) that may be generated by the ATWS circuits.

RESPONSE

The Energy Incorporated isolator surge withstand test demonstrated favorable response when the isolator was subjected to a 1.0 to 1.5 Mhz burst from a surge transient generator at 2.5 KV peak value. The isolator was also subjected to a bandwidth test to verify single pole filter characteristics. Radio interference and cross talk have not been identified as a problem for similar E1 isolators presently in use at H. B. Robinson.

INFORMATION REQUEST G

Provide information to verify that the Class 1E isolator is powered from a Class 1E source.

RESPONSE

The steam generator level and turbine pressure input isolators will be powered from safety-related power supplies from the respective safety-related circuits.

10.0 PHYSICAL SEPARATION FROM EXISTING REACTOR PROTECTION SYSTEM

Physical separation from existing Reactor Protection System is not required unless redundant divisions and channels in the existing reactor trip system are not physically separated. The implementation must be such that separation criteria applied to the existing protection system are not violated. The plant-specific submittal should respond to this concern.

RESPONSE

AMSAC will be physically separated from existing Reactor Protection System hardware. Cable routing will maintain separation from existing Reactor Protection System cable. The AMSAC controller will be located in a separate cabinet where there will be no interaction with existing Reactor Protection System equipment. Nonsafety AMSAC equipment will be isolated from existing Reactor Protection System at inputs and outputs.

11.0 ENVIRONMENTAL QUALIFICATION

The plant-specific submittal should address the environmental qualification of ATWS equipment for anticipated operational occurrences only, not for accidents.

RESPONSE

The AMSAC controller proposed location is the controlled, mild environment of the Unit 1 Cable Spread Room. The Unit 1 Cable Spread Room will remain a mild environment under all anticipated operational occurrences.

12.0 TESTABILITY AT POWER

Measures are to be established to test, as appropriate, nonsafety-related ATWS equipment prior to installation and periodically. Testing of AMSAC may be performed with AMSAC in bypass. Testing of AMSAC outputs through the final actuation devices will be performed with the plant shut down. The plant-specific submittals should present the test program and state that the output signal is indicated in the Control Room in a manner consistent with plant practices including human factors.

RESPONSE

Present plans for the Control Room indication include "AMSAC Armed," "AMSAC Bypassed," "AMSAC Initiated," and "AMSAC Trobule." In addition, the AMSAC Bypass Switch will be located in the Control Room. Formal human factors review will be conducted as a normal part of the plant modification process in accordance with the provisions specified within the HBR2 Detailed Control Room Design Review Summary Report.

The proposed AMSAC system will offer extensive self-testing and diagnostics as well as built-in capabilities to facilitate operator testing.

Controller Program Checks (Automatic)

Each programmable controller will perform self-diagnostics to ensure proper operation. Immediately upon power-up, it will perform a cyclic redundancy check on the read only memory (EPROM) containing the microprogram which directs the programmable controller operation. The self-diagnostics will test the random access memory (RAM) to ensure it can be written to, and read from, and verify proper operation of the arithmetic and logic functions.

A parity check on the program memory is performed each time an instruction is executed. This involves encoding a specific "parity bit" tracer at predetermined locations in the program data in memory. The controller verifies the authenticity of the command by verifying the existence and location of the parity bit. A watchdog timer will check that each scan is executed normally. These checks will ensure that the hardware functions properly and the software is not corrupted.

Sensor Input Quality Checks (Automatic)

The AMSAC controller program will perform a "spread check" on AMSAC input signals every scan cycle and light the "AMSAC Trouble" lamp on the RTGB in the Control Room and on the local AMSAC panel if a large difference exists among the level signal inputs from the three steam generators or the two pressure signal inputs from the turbine. The plant personnel will then use the AMSAC panel's diagnostic features, located on the AMSAC cabinet in the Cable Spread Room, to investigate the nature of the problem. Figure B shows the controls and displays currently planned for this local AMSAC panel. Although the design is still preliminary, this figure will be used here to help explain how the system's capabilities can be used to facilitate testing and troubleshooting. The precise manner in which these capabilities are incorporated into the final design may be subject to change.

Status lights for each input to each controller unit will indicate which of the inputs was exhibiting the excessive "spread" which initiated the "AMSAC Trouble" lamp in the Control Room. Simple deductive reasoning will enable plant personnel to quickly ascertain the probable source of the problem that actuated the trouble light. For example, a large signal spread for the same steam generator level exhibited on both of the AMSAC microprocessors would suggest a defective analog input signal while a large signal spread indicated by only one of the microprocessors would suggest a defective microprocessor. Similar diagnostic capability also exists for the C-20 permissive signal.

These status lamps will also indicate any inputs which are in a "tripped" status for having exceeded their setpoint values. A separate "variable tripped" lamp indication will allow plant personnel to distinguish indication of an input exceeding its setpoint from that of the input exhibiting an excessive spread from the other corresponding inputs.

Program Logic Verification (Manual)

The application program logic will be tested manually by switches located on this local AMSAC panel. The operator will select the desired microprocessor using the "TEST" switch to take that unit off-line while the other AMSAC microprocessor remains on-line to provide full AMSAC capability. Using the hard wired switches associated with the input status light, the operator can then simulate various combinations of inputs to the unit in test. Here again, the status light will indicate which input signals have been bypassed with simulated inputs and verify that appropriate output signals are generated by the program.

Output Contact Verification (Automatic)

To enhance reliability and testability, each AMSAC controller unit will drive three relays wired in a configuration shown in the attached Figure A. Continuity is required across these contacts in order to supply power to the isolation relays which initiate mitigating actions. One of the relays from each controller unit (labelled A3 and B3) will be normally closed during operation and opened only when the associated controller unit is in a test mode. The other two relays from each unit are redundant modules which are normally open and close only upon an AMSAC actuation signal from the associated controller. This configuration of redundant output relays from independent controller units contributes significantly to the reliability of the system. This configuration also allows each individual controller to automatically open its associated test relay and verify operation of its output relays without applying power to the final actuation relays or inhibiting the ability of the other controller unit to initiate an AMSAC actuation signal.

Trip-Setpoint Accuracy Test (Manual)

Periodic analog signal accuracy tests will be performed manually by injecting a current into the controller unit in the test mode at an external terminal connector and verifying the current value displayed on the digital readout. The trip setpoint for each input signal is similarly compared using a variable input current source and checking display value when the corresponding lamp actuates. The test frequency for accuracy and trip setting are anticipated to be comparable to the existing Reactor Protection System periodic checks.

Safety/Non-Safety Interface Isolation Test (Manual)

Input isolation devices and the output relays which interface with the safety-related actuation circuits will be periodically tested and calibrated much the same as existing Reactor Protection System circuitry.

13.0 COMPLETION OF MITIGATIVE ACTION

AMSAC shall be designed so that, once actuated, the completion of mitigating action shall be consistent with the plant turbine trip and auxiliary feedwater circuitry. Plant-specific submittals should verify that the protective action, once initiated, goes to completion and that the subsequent return to operation requires deliberate operator action.

RESPONSE

The AMSAC controller, upon plant conditions indicative of an ATWS event, will trip the turbine and start auxiliary feedwater via contacts added into existing plant circuitry. The ATWS event signal will allow existing "seal in" circuits to complete mitigating action (see Sketches SK-85-080/00-Z-7015 and SK-85-080/00-Z-7016). Deliberate operator action will be required to restore reactor protection circuits to manual operation.

14.0 TECHNICAL SPECIFICATIONS

Technical Specification requirements related to AMSAC will have to be addressed by plant-specific submittals.

RESPONSE

Carolina Power & Light Company concurs with the position of the Westinghouse Owners' Group (WOG) that technical specifications for AMSAC are unnecessary and inconsistent with the goals and criteria of the TS Improvement Program. The justification for this position was presented to the NRC by WOG Letter OG-171, dated February 10, 1986.

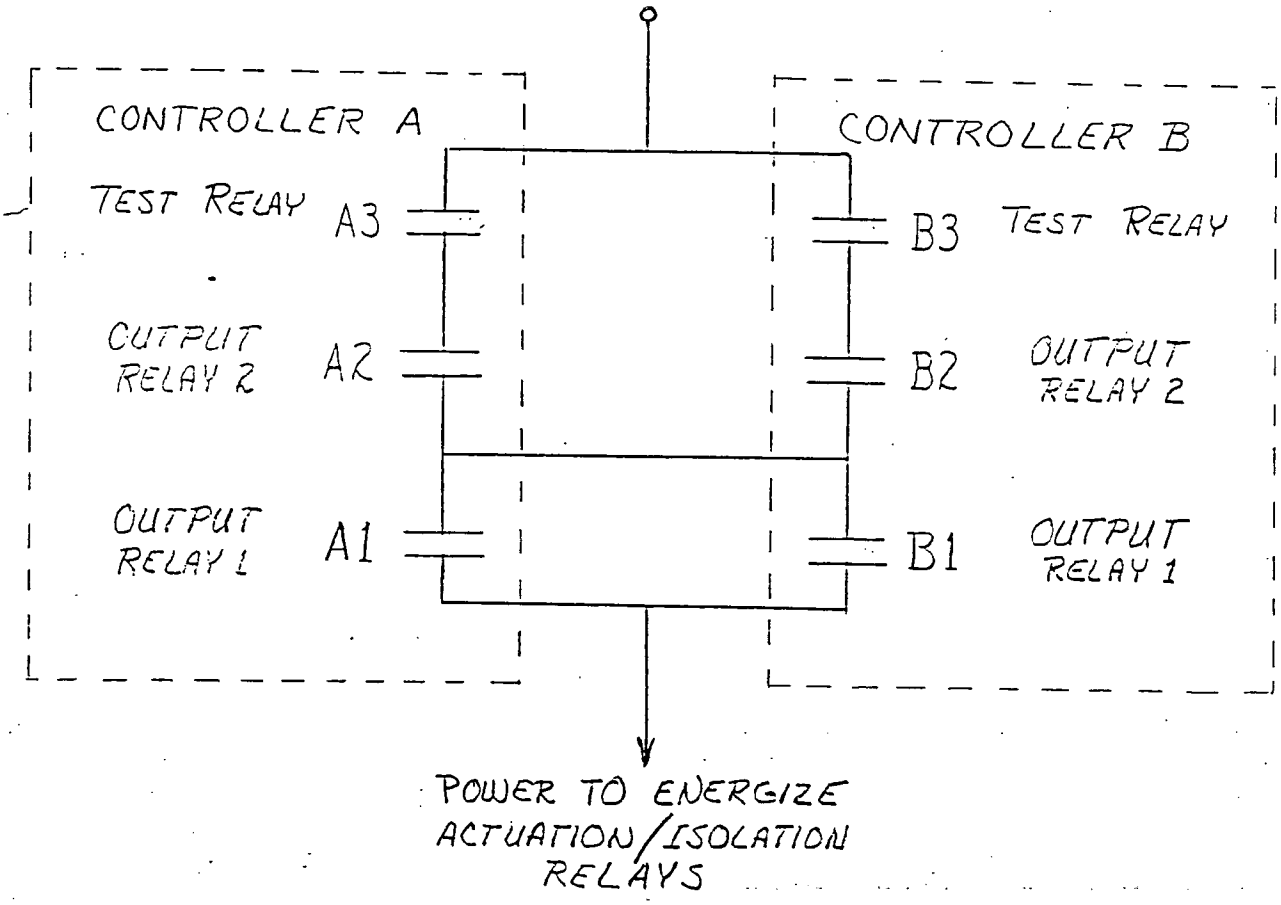

Notes:

1) All contacts open when de-energized.

2) Contacts labeled A are driven by Processor A; those labeled B are driven by Processor B. Either processor is capable of independently generating the AMSAC initiating signal.

3) Contacts A3 and B3 are held closed when the AMSAC is running. A3 opens when Processor A is under test; Contact B3 opens when B is under test.

4) Contacts numbered 1 and 2 are from redundant output modules on each controller. Both close upon a signal from the controller to initiate AMSAC mitigating action.

FIGURE A - ARRANGEMENT OF SIGNAL OUTPUTS

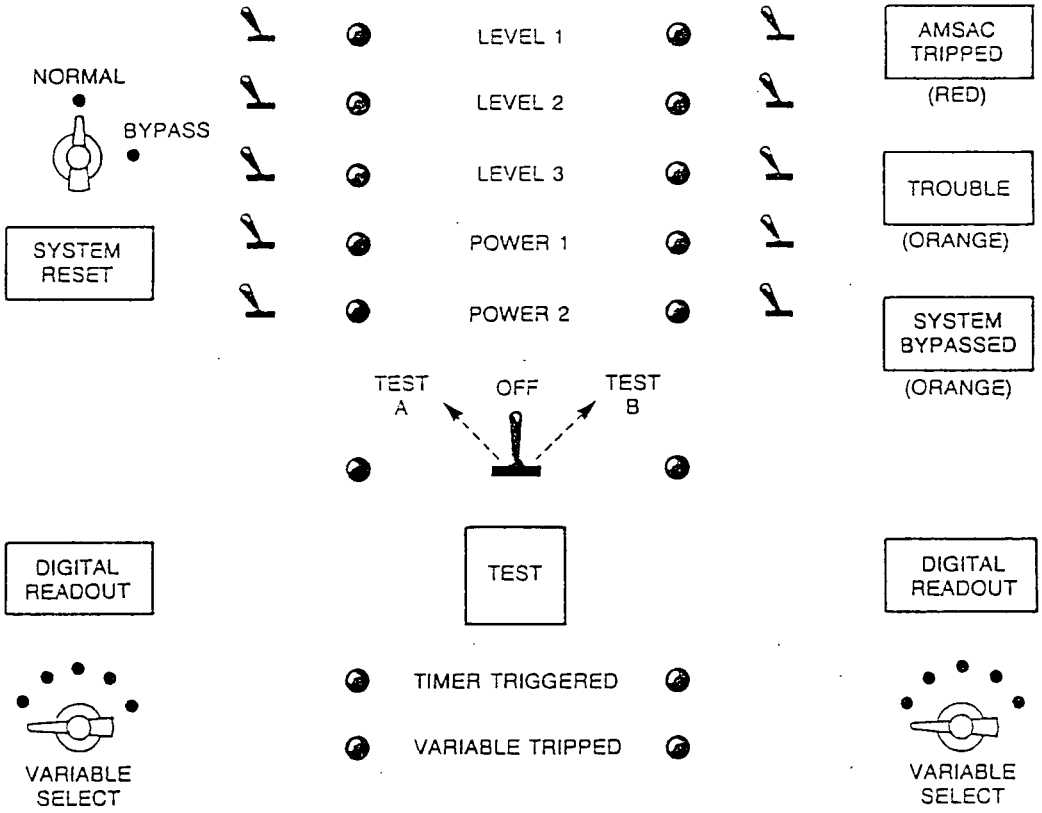

FIGURE B AMSAC PANEL

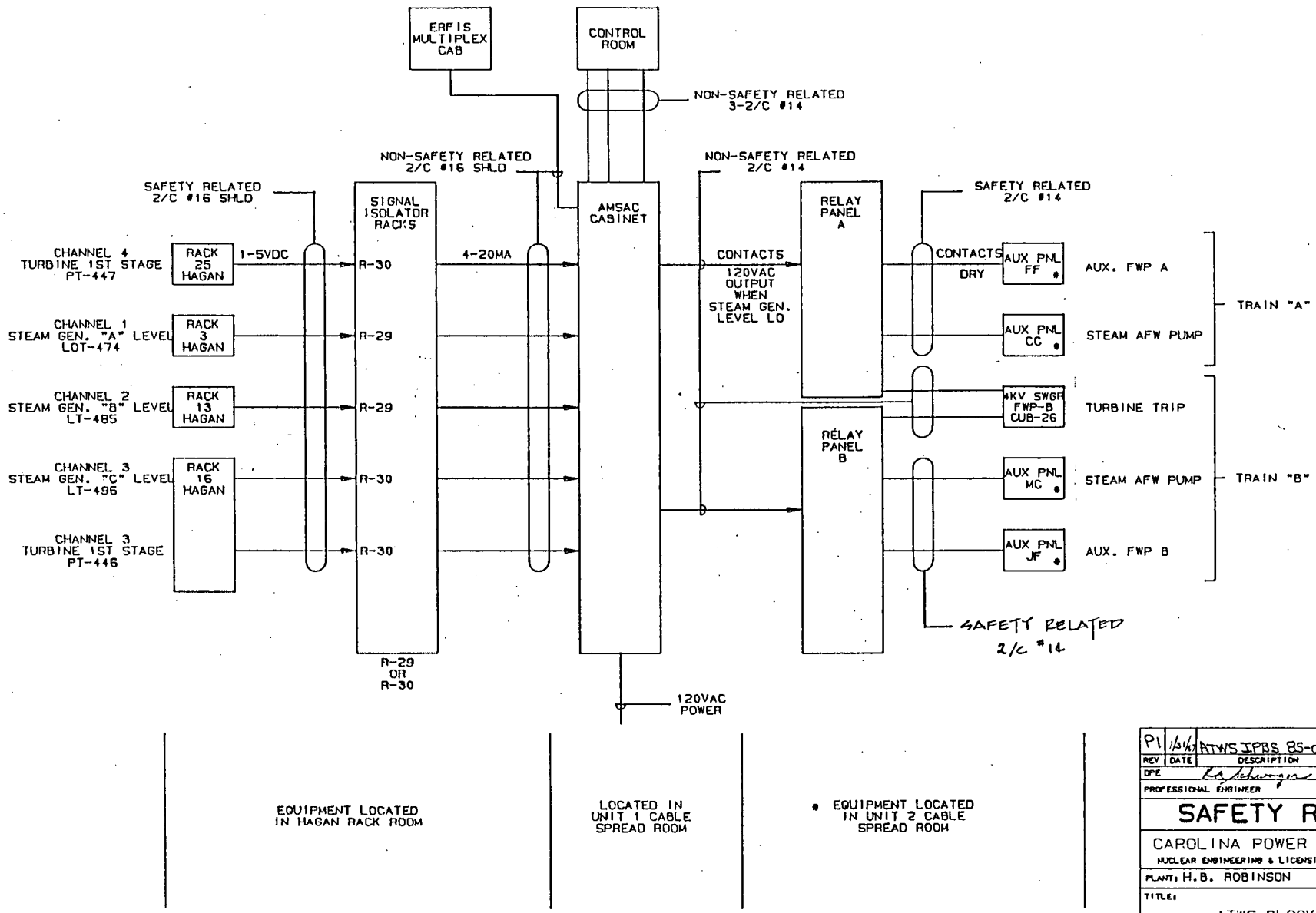

REV	DATE	DESCRIPTION	DWN	CK	RE	DPE	DPPE	LE
P1	1/31/87	ATWS IPBS 85-080/00	LC				AC	

DPE

PROFESSIONAL ENGINEER REG. NO.

SAFETY RELATED

CAROLINA POWER & LIGHT COMPANY

NUCLEAR ENGINEERING & LICENSING DEPARTMENT - RALEIGH, N.C.

PLANT: H.B. ROBINSON UNIT #2

TITLE: ATWS BLOCK DIAGRAM

DWG. NO. SK-85-080/00-Z-7000 SCALE: NONE SHEET REV. NO. P1

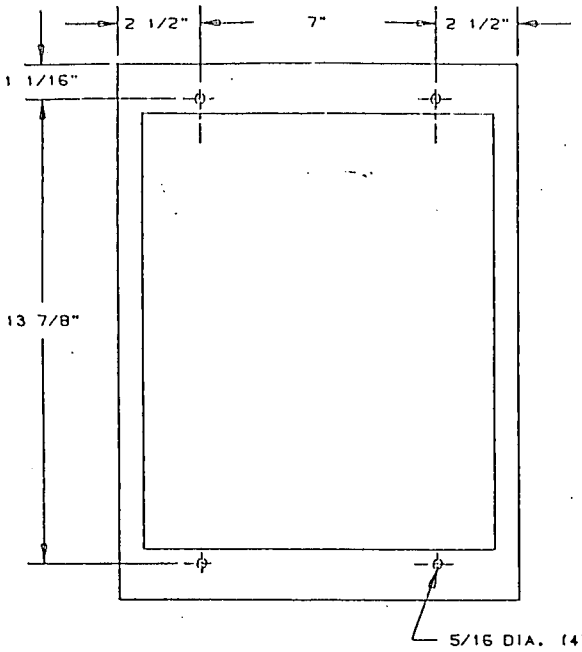

MOUNTING
DIMENSIONS

SCALE: 1/4" = 1"

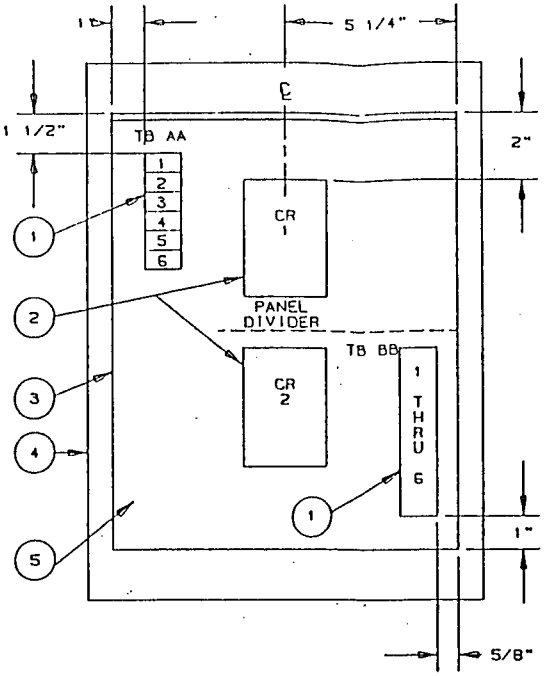

EQUIPMENT
GENERAL ARRANGEMENT

SCALE: 1/4" = 1"

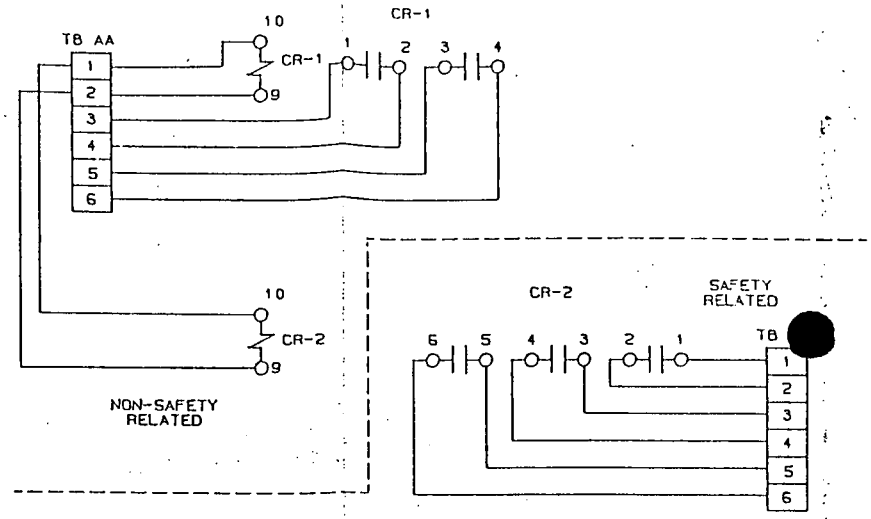

WIRING DETAILS

BILL OF MATERIAL

ITEM	QTY	DESCRIPTION
1	2	TERMINAL BLOCK G.E. CAT #CR-151B6
2	2	RELAY-TELEMECANIQUE CAT #J10CE012
3	1	PANEL-FURNISHED W/ENCLOSURE
4	1	HOFFMAN ENCLOSURE CAT #A-16N12A

REV	DATE	DESCRIPTION	DWN	CK	HE	DPE	DPPE	LE
P1	[illegible]	ATWS IPBS 85-080/00	[illegible]	[illegible]	[illegible]	RC	[illegible]	

DPE [illegible]

PROFESSIONAL ENGINEER REG. NO.

SAFETY RELATED

CAROLINA POWER & LIGHT COMPANY

NUCLEAR ENGINEERING & LICENSING DEPARTMENT - RALEIGH, N.C.

PLANT: H.B. ROBINSON UNIT #2

TITLE: ATWS RELAY
ENCLOSURE MISC. DETAILS
TYPICAL (2)

DWG. NO. SK-85-080/00-Z-7001 SCALE: AS NOTED SHEET REV NO. P1

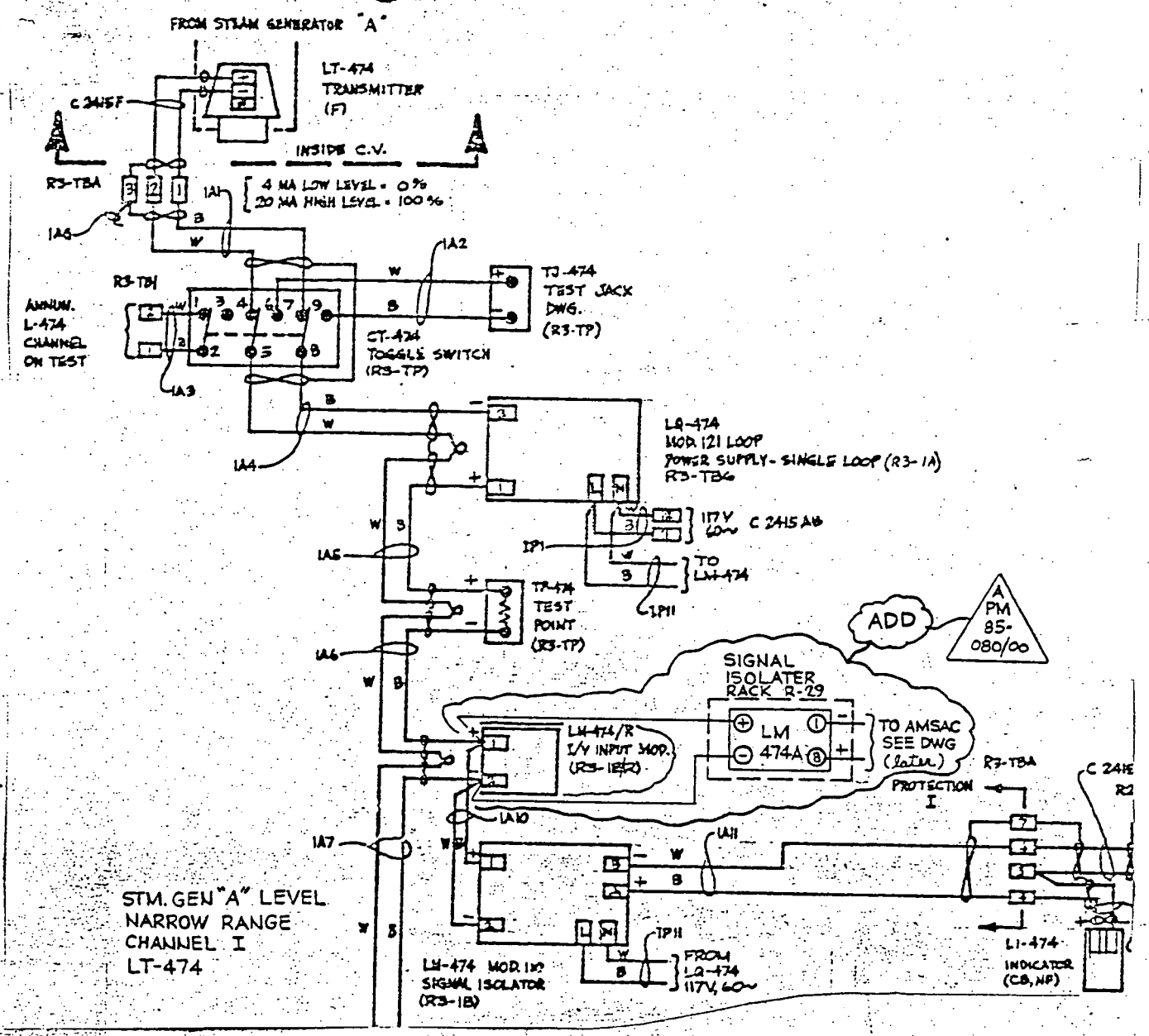

BASE DWG
5379-3518 REV. 14

REV NO.	DATE	DESCRIPTION	DRAWN BY / CHK'D	RV'WD	APPRV.
P1	7/31/87	ATWS IPRS 85-080/00	TV / RDE	RWL	AC

CAROLINA POWER & LIGHT CO.
H.B. ROBINSON STEAM ELECTRIC PLANT

SAFETY RELATED

HAGAN WIRING DIAGRAM

REF. DWG. 5379-3518

SKETCH NO. SK-85-080/00-E-7003

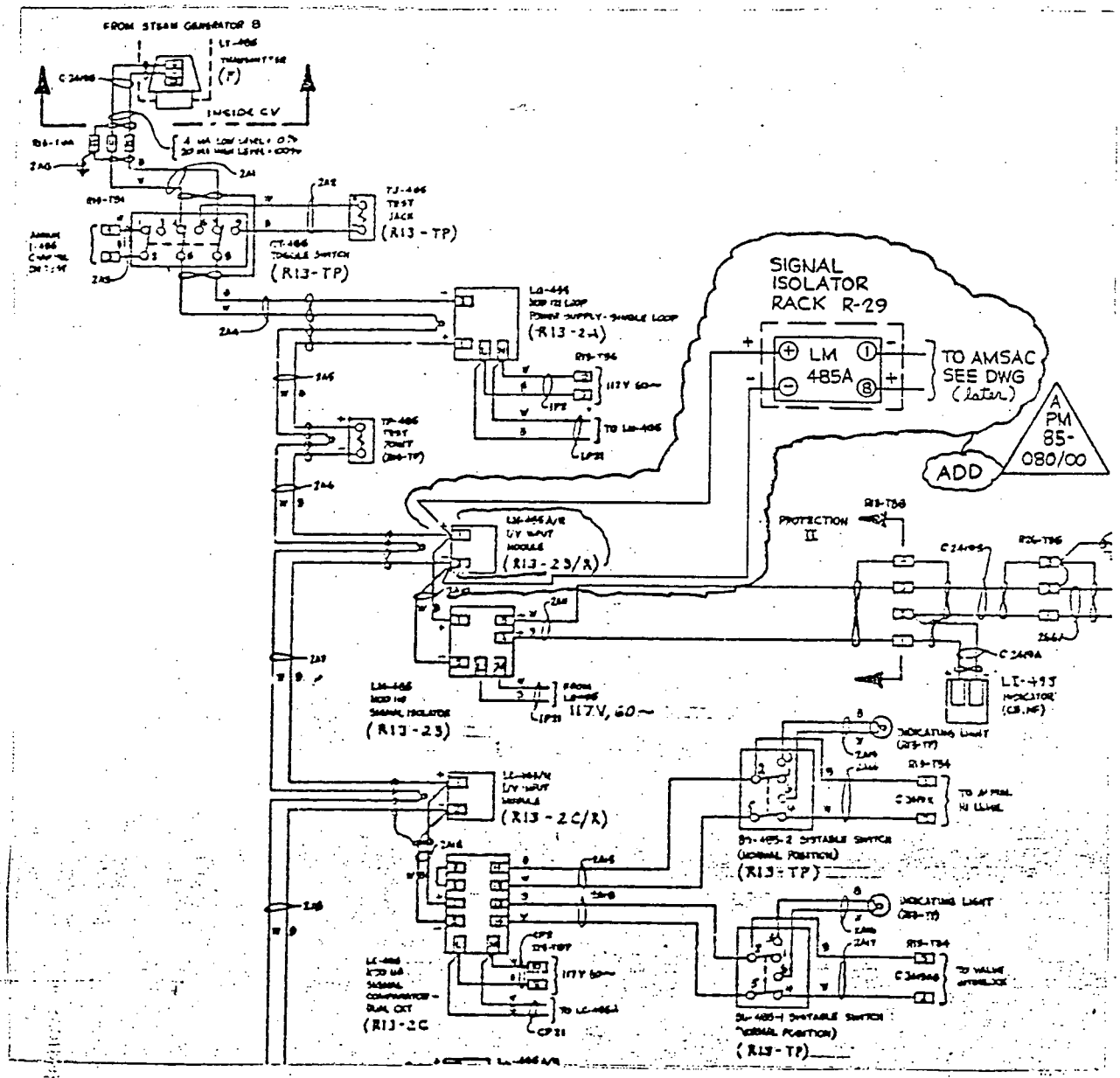

STM GEN "B" LEVEL
NARROW RANGE
CHANNEL II
LT-485

BASE DWG
5379-3514 REV. 11

REV NO.	DATE	DESCRIPTION	DRAWN BY	CHK'D	RV'WD	APPRV.
P1	7/31/87	ATWS TPRS 85-080/00	TV	RE	[illegible]	AC

CAROLINA POWER & LIGHT CO.
H.B. ROBINSON STEAM ELECTRIC PLANT

SAFETY RELATED

HAGAN WIRING DIAGRAM

REF. DWG. 5379-3514

SKETCH NO. SK-85-080/00-Z-7004

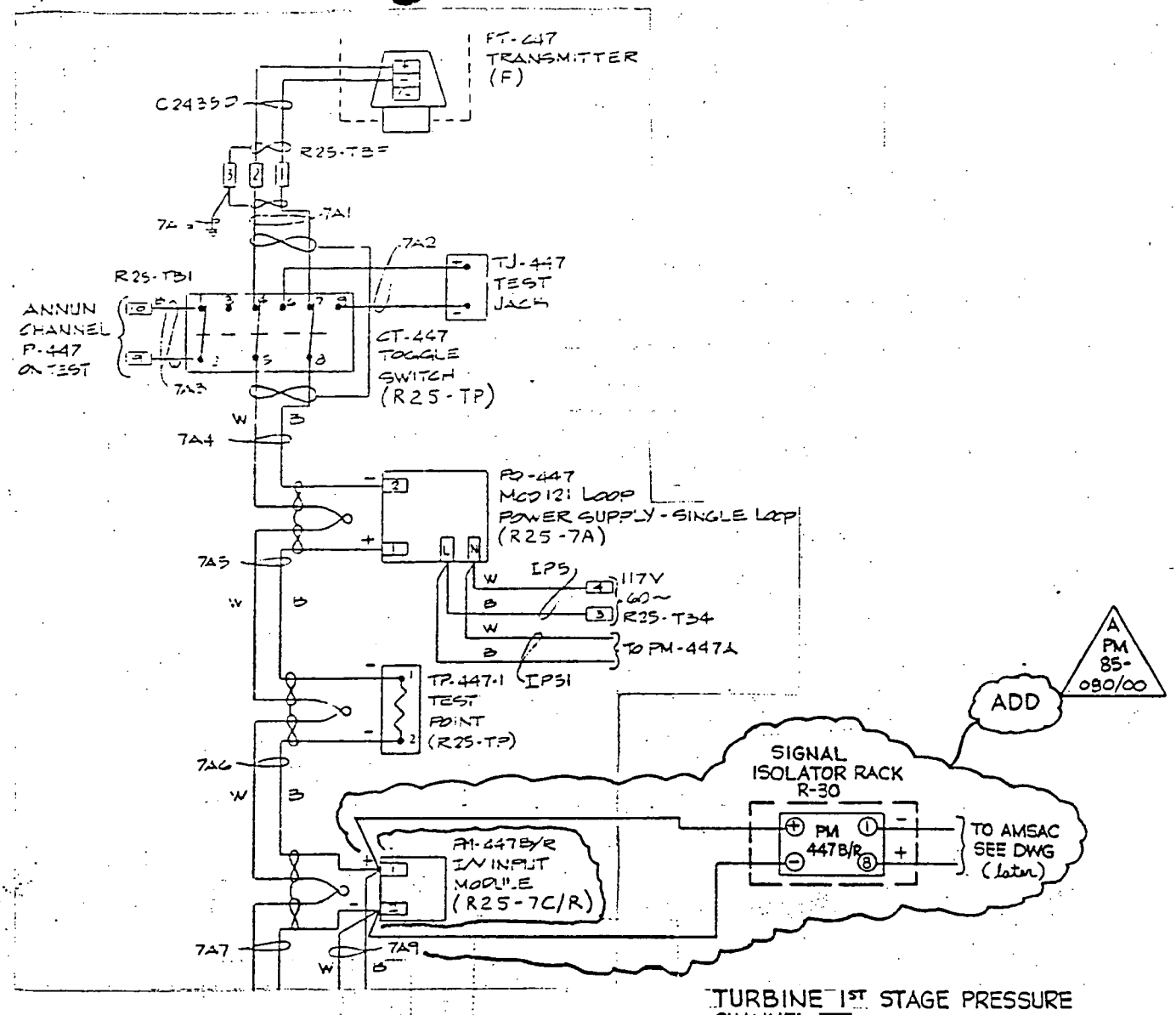

TURBINE 1ST STAGE PRESSURE
CHANNEL IV
PT-447

BASE DWG
5379-3497 REV. 11

REV NO.	DATE	DESCRIPTION	DRAWN BY	CHK'D	APP'D	APPRV.
P1	7/31/87	ATWS IPBS 85-080-00	TV			AC

CAROLINA POWER & LIGHT CO.
H.B. ROBINSON STEAM ELECTRIC PLANT

SAFETY RELATED

CHAGAN WIRING DIAGRAM

REF. DWG. 5379-3497

SKETCH NO. SK-85-080/00-E-7005

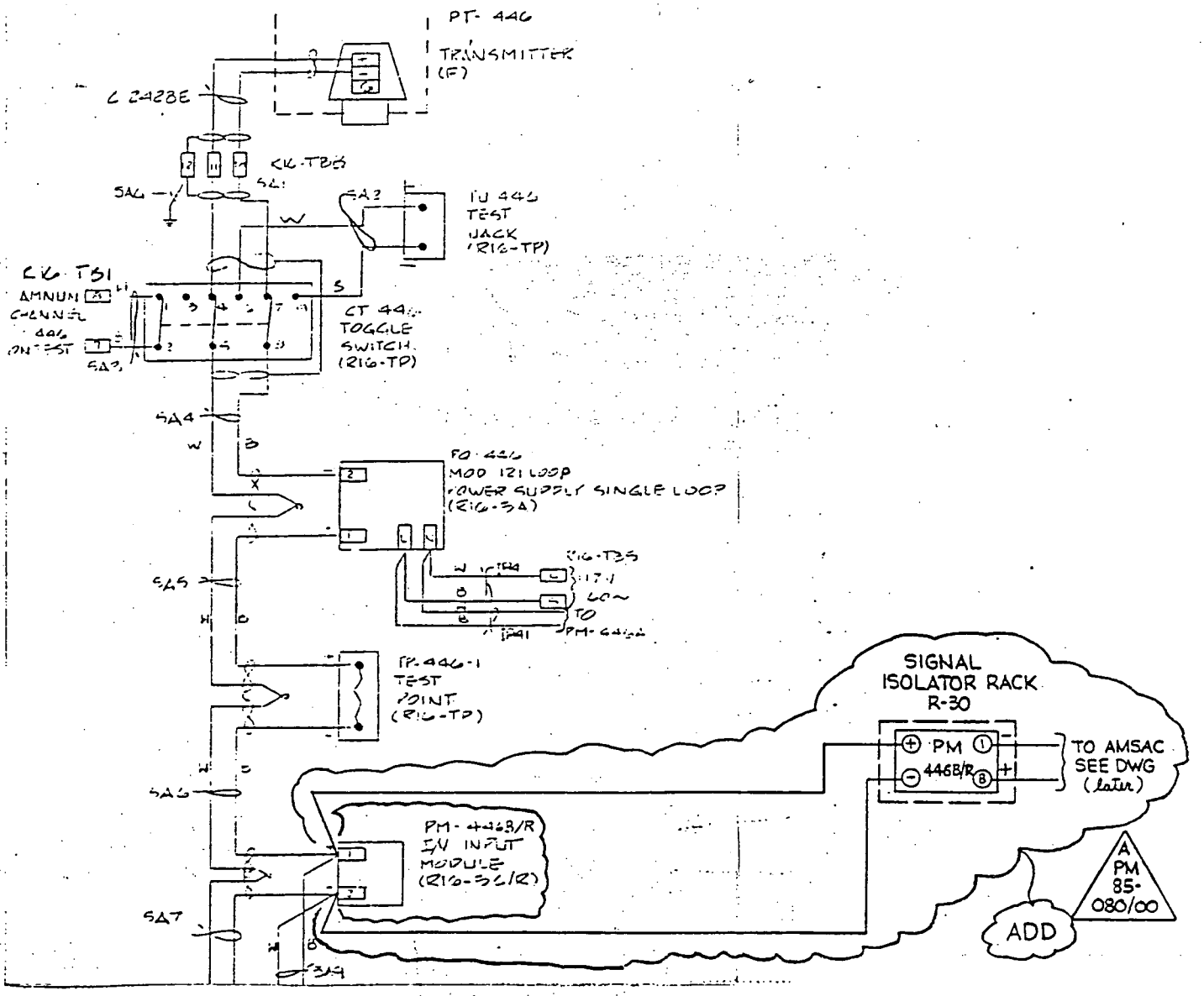

TURBINE 1ST STAGE PRESSURE
CHANNEL III
PT-446

BASE DWG
5379-3491 REV. 13

REV NO.	DATE	DESCRIPTION	DRAWN BY	REV'D	APPRV.
P1	7/31/87	ATWS IPBS 85-080-00	TV/RAE	FL	AC

CAROLINA POWER & LIGHT CO.
H.B. ROBINSON STEAM ELECTRIC PLANT

SAFETY RELATED

HAGAN WIRING DIAGRAM

REF. DWG. 5379-3491

SYSTEM NO. SX-85-080/00-Z-7006

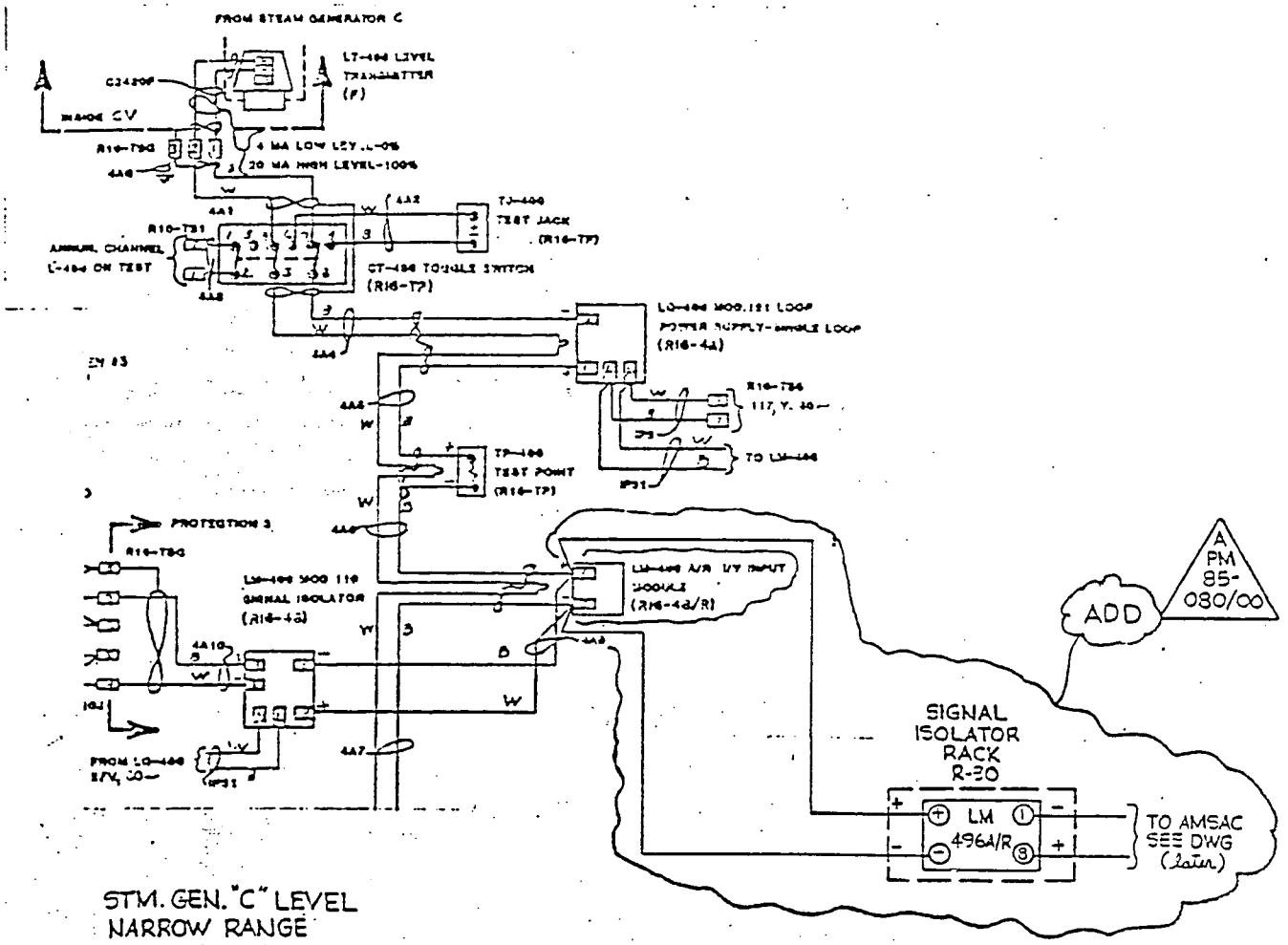

STM. GEN. "C" LEVEL
NARROW RANGE
CHANNEL III
LT-496

BASE DWG
5379-3515 REV. 11

REV NO.	DATE	DESCRIPTION	DRAWN BY / CHK'D	RV'WD	APPRV.
P1	1/31/97	ATWS JPBS RS-080-00	TV / RAE		AC

CAROLINA POWER & LIGHT CO.
H.B. ROBINSON STEAM ELECTRIC PLANT

SAFETY RELATED

HAGAN WIRING DIAGRAM

REF. DWG. 5379-3515

SKETCH NO. SK-85-080/00-E-7007

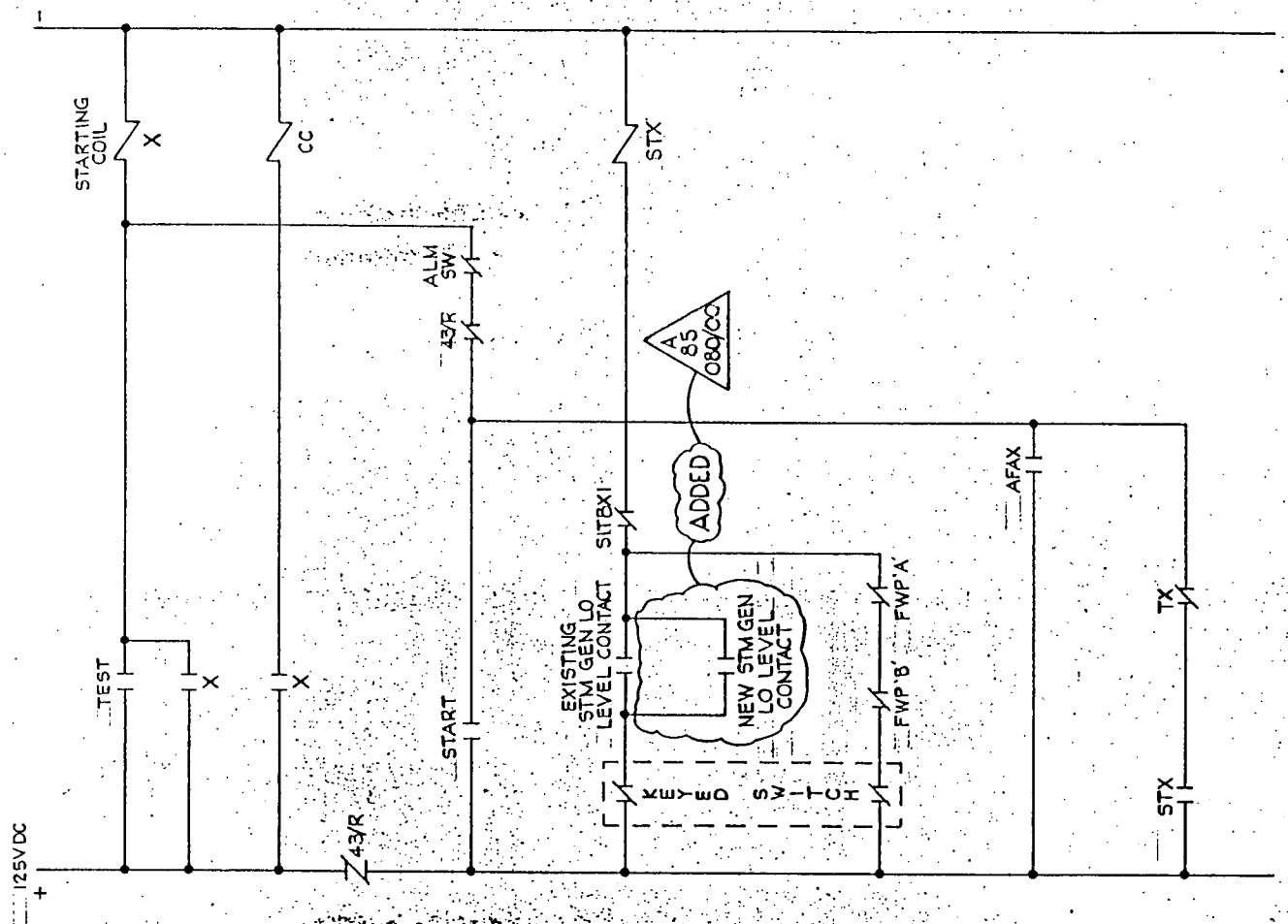

REV	DATE	DESCRIPTION	DWN	RE	APPR
P1	1/4/91	ATWS IPBS 85-080/00	TV	[illegible]	AC
			CK	DPE	LE

PROFESSIONAL ENGINEER _____ REG. NO. _____

SAFETY RELATED

CAROLINA POWER & LIGHT COMPANY
NUCLEAR PLANT ENGINEERING DEPARTMENT – RALEIGH, N.C.

PLANT: H.B. ROBINSON S.E.P. UNIT # 2

TITLE: STARTING CONTROL CIRCUIT FOR AUX. FEEDWATER PUMPS A & B (MOTOR DRIVEN) CWD'S 651 & 655

REV	QA	STR/C	NUC	MECH	ELECT	I&C

DWG. NO. SK-85-080/00-Z-7015 SCALE: NONE SHEET OF REV. NO. P1

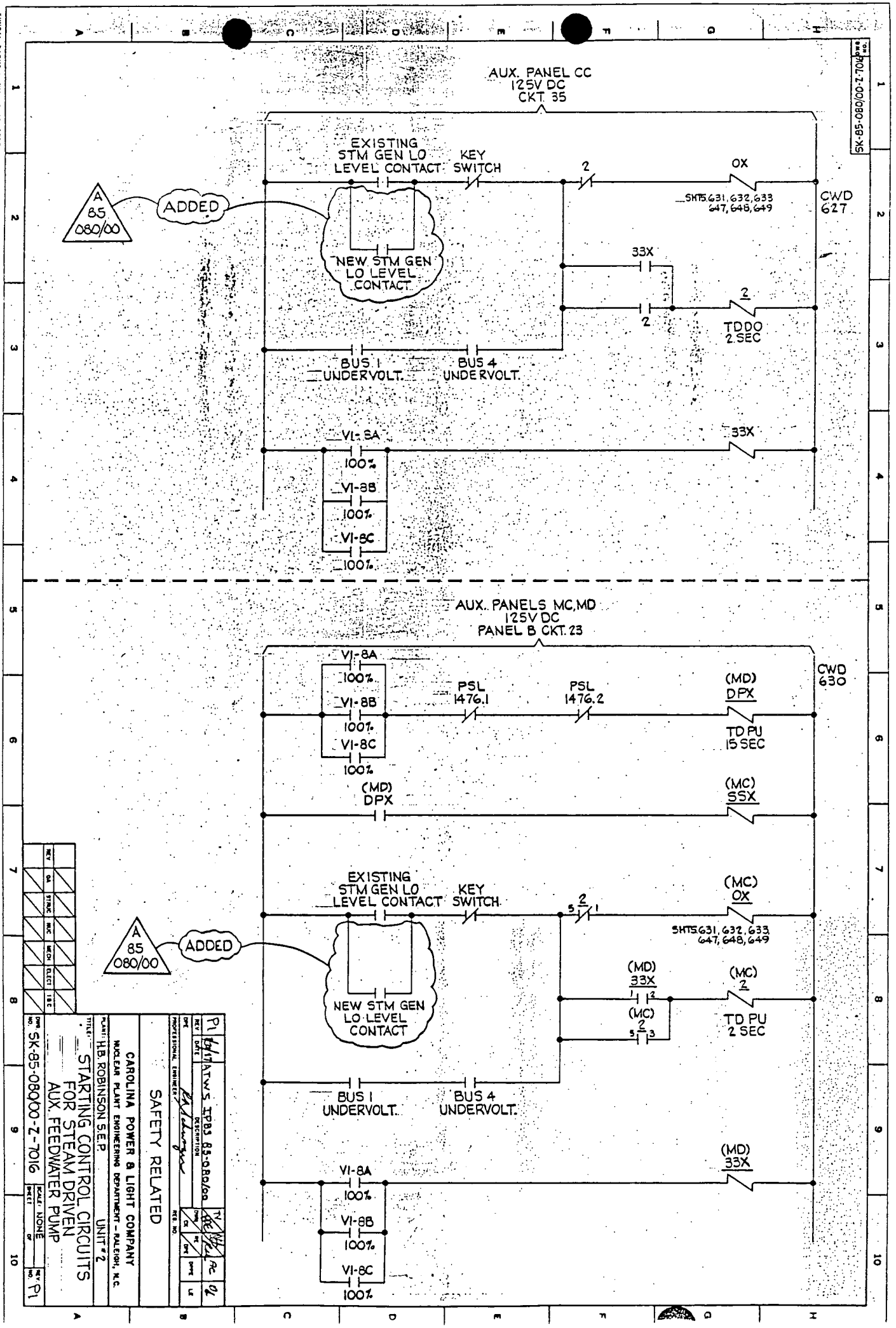
AUX. PANEL CC
125V DC
CKT. 35
EXISTING
STM GEN LO
LEVEL CONTACT
KEY
SWITCH
2
OX
SHTS 631, 632, 633
647, 648, 649
CWD
627
A
85
080/00
ADDED
NEW STM GEN
LO LEVEL
CONTACT
33X
2
2
TDDO
2 SEC
BUS 1
UNDERVOLT.
BUS 4
UNDERVOLT.
VI-8A
33X
100%
VI-8B
100%
VI-8C
100%
AUX. PANELS MC, MD
125V DC
PANEL B CKT. 23
VI-8A
100%
VI-8B
100%
VI-8C
100%
PSL
1476.1
PSL
1476.2
(MD)
DPX
CWD
630
TD PU
15 SEC
(MD)
DPX
(MC)
SSX
EXISTING
STM GEN LO
LEVEL CONTACT
KEY
SWITCH
(MC)
OX
SHTS 631, 632, 633
647, 648, 649
A
85
080/00
ADDED
NEW STM GEN
LO LEVEL
CONTACT
(MD)
33X
(MC)
2
(MC)
2
TD PU
2 SEC
BUS 1
UNDERVOLT.
BUS 4
UNDERVOLT.
(MD)
33X
VI-8A
100%
VI-8B
100%
VI-8C
100%
SK-85-080/00-Z-7016
P1
ATWS IPB3 85-080/00
SAFETY RELATED
CAROLINA POWER & LIGHT COMPANY
NUCLEAR PLANT ENGINEERING DEPARTMENT - RALEIGH, N.C.
PLANT: H.B. ROBINSON S.E.P. UNIT # 2
STARTING CONTROL CIRCUITS
FOR STEAM DRIVEN
AUX. FEEDWATER PUMP
DWG NO. SK-85-080/00-Z-7016
SCALE: NONE
SHEET
REV NO. P1

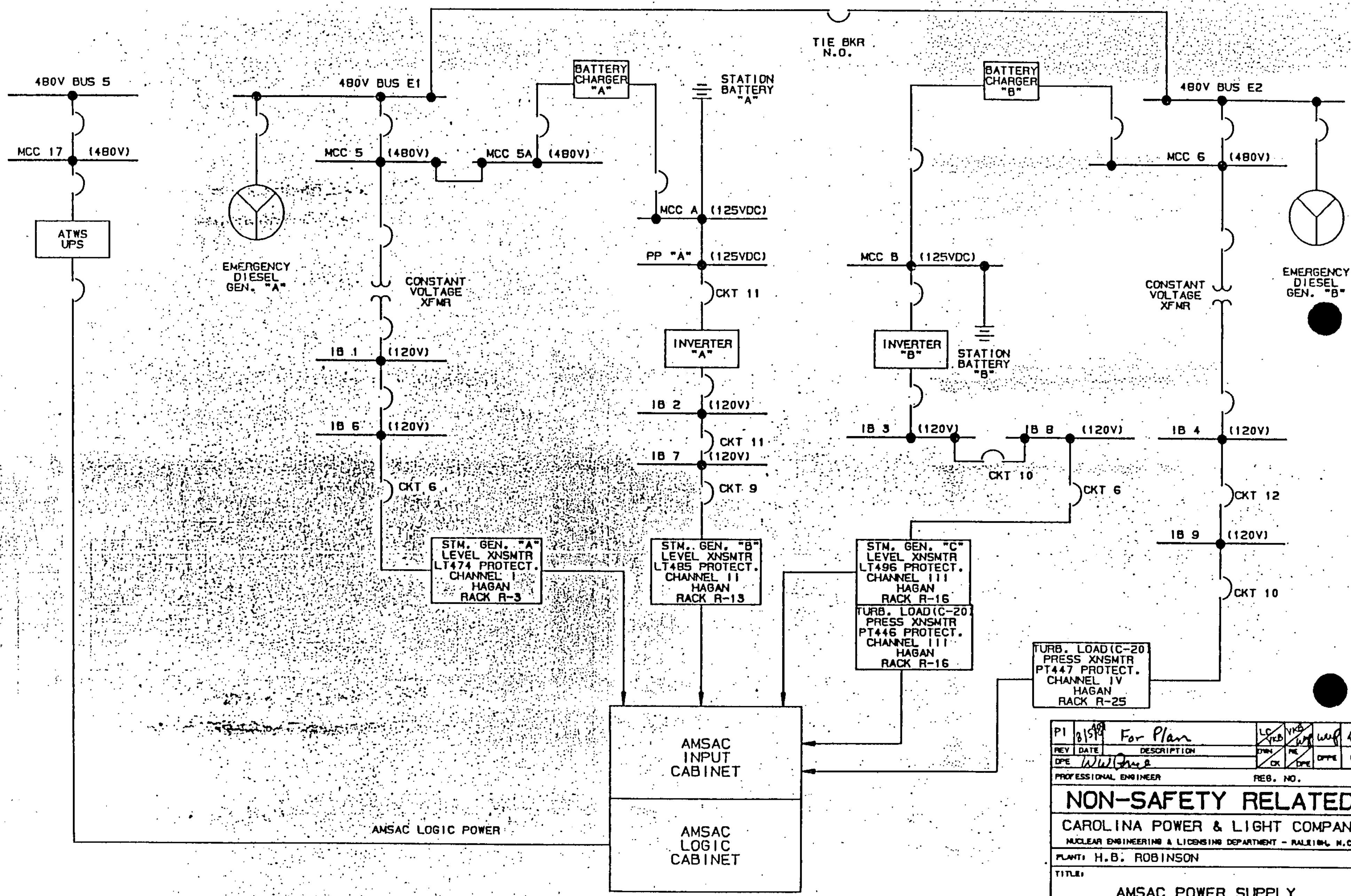

REV	DATE	DESCRIPTION	DWN / CK	PE / DPE	OPPE	LE
P1	8/5/85	For Plan	LC / TKB	VKB / wuf	wuf	AB

DPE: W.W. [illegible]

PROFESSIONAL ENGINEER REG. NO.

NON-SAFETY RELATED

CAROLINA POWER & LIGHT COMPANY
NUCLEAR ENGINEERING & LICENSING DEPARTMENT - RALEIGH, N.C.

PLANT: H.B. ROBINSON

TITLE: AMSAC POWER SUPPLY

DWG. NO. SK-85-080/00-E-3005 | SCALE: NONE | SHEET | REV. NO.

AFFIDAVIT

Pursuant to provisions of 10CFR Section 2.790 (a)(4) "Public inspections, exemptions, request for withholding" the document prepared by EI International, Inc. (Formerly Energy, Incorporated) entitled "Qualification Report for Energy Incorporated Series SC993 Class 1E Single Channel Analog Encapsulated Isolator" contains trades secrets and commercial proprietary information which EI International, Inc. hereby applies for a withholding judgement with respect to the document from public disclosure. EI International, Inc. protects and maintains such proprietary information under confidential security procedures. The subject document contains Design Specifications, a Description of the Qualification Program, and the Qualification Plan Implementation Procedures for the Series SC993 Class 1E Single Channel Analog Encapsulated Isolator. The information provided in the report was independently developed at a significant cost to EI International, Inc. The release of such information within the industry through public disclosure would cause substantial harm to the competitive position of EI International, Inc. and provide an unfair competitive and financial advantage to the competitor who may obtain the information.

Erik Pedersen
EI International, Inc.
Group Vice President

VERIFICATION

STATE OF Idaho

COUNTY OF Bonneville

I, Erik Pedersen, being duly sworn, depose and state that I am the Vice President of EI International, Inc., the corporation named in and described in the foregoing affidavit and that I have read the foregoing affidavit and know the contents thereof to be true.

Erik Pedersen

Sworn to before me this 21

day of October 1987.

Dana K Sweet
Notary Public