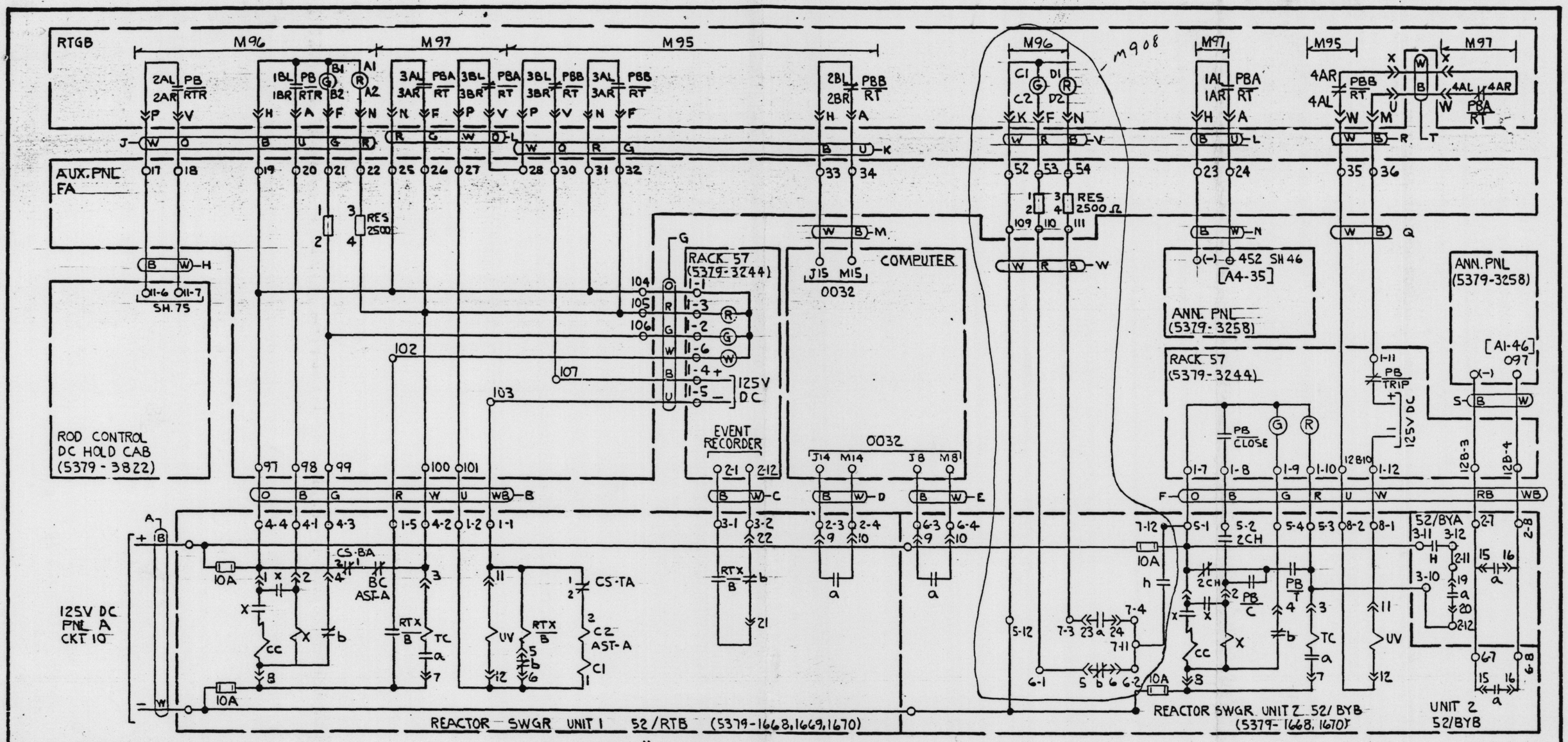

JUL 0 9 1987

INFO ONLY

REACTOR TRIP BREAKERS
52/RTA & 52/BYB

REVISIONS	
DCR 87-255; 735	10
MOD. 908; 807D	
REVISED & REDRAWN TO SUPERSEDE B-190628 SHT 45 REV. 9	
DCR: 87-1059	11
MOD: 908	
BY: H.E.L. LLOYD	
CK: W.J.	
APPR: CA	

TI APERTURE CARD

DRN: J.E.	CAROLINA POWER & LIGHT CO.
CHK: W. JOHNSON	H.B. ROBINSON S. E. PLANT - UNIT 2
DATE: 3-27-87	TITLE
ENG: R. McDirt	CONTROL WIRING DIAGRAM
APPR: CA 5-15-87	SCALE NONE · SIZE B · DWG. NO. B-190628 · REV. 11
APPR:	
APPR:	SHEET 45 OF

CAPITAL BLUEPRINT CO. N30249

8707220349

I certify that the image contained on this frame was made