ATTACHMENT 2

H. B. ROBINSON

UNIT NO. 2

SPENT FUEL STORAGE EXPANSION REPORT

TABLE OF CONTENTS

TABLE OF CONTENTS (CONT'D)

1.0 INTRODUCTION

This design report and safety evaluation concerns the installation of high density, poisoned fuel storage racks in the existing spent fuel pool of H. B. Robinson Steam Electric Plant Unit 2.

The H. B. Robinson 2 spent fuel pool currently contains racks with a capacity of 276 PWR fuel assemblies. It was originally assumed that about one third of the core would be discharged annually and that spent fuel would be removed from the plant for reprocessing within approximately a year after discharge from the reactor. In order to refuel in 1976, thirty-six additional cells were added to the pool. In 1977, 1978, and 1979 spent fuel was shipped to the Brunswick Steam Electric Plant (BSEP). Shipments of spent fuel from H. B. Robinson to BSEP planned for late 1980 will fill the PWR storage racks at BSEP. Because the reprocessing option is still not available at this time, CP&L plans to expand the storage capacity of the H. B. Robinson spent fuel pool by replacing some of the existing spent fuel storage racks with high density, poisoned racks.

It is desirable to have enough capacity in reserve to allow for a full-core discharge. Such capacity will not exist in the H. B. Robinson Unit 2 spent fuel pool subsequent to its 1981 refueling outage.

The modification will add 368 high density spent fuel storage spaces and remove 100 existing spaces for a net increase of 268 storage spaces. This will bring the total storage capacity to 544 spaces; however, only 534 spent fuel assemblies will be stored with the remaining 10 spaces being administratively controlled as unused spares. The modification will provide storage capacity until 1986 with a full-core reserve, assuming annual one-third core reloads.

This report describes the design of the high density fuel storage racks to be installed and contains a discussion of the environmental and radiological considerations of the installation. The information contained herein has been prepared based on the recommendations provided in "Operating Technical Position for Review and Acceptance of Spent Fuel Storage and Handling Applications" which was issued by the Nuclear Regulatory Commission (NRC) on April 14, 1978 and later amended on January 18, 1979.

Westinghouse Electric Corporation will design and supply the high density, poisoned spent fuel storage racks that will be installed at H. B. Robinson Unit 2.

2.0 OVERALL DESCRIPTION

The location of the spent fuel storage pool within the plant is shown in Figures 2-1 through 2-4. The spent fuel storage pool rack arrangement is shown in Figures 2-5 and 2-6.

The spent fuel storage rack is composed of individual storage cells made of stainless steel. Each cell has a flared lead-in opening with a smooth transition curve into the body of the cell. This opening facilitates insertion of the fuel elements and precludes insertion of the fuel assemblies in other than the prescribed locations. These racks utilize a neutron absorbing material, Boraflex, which is attached to each cell. The cells within a module are interconnected by grid assemblies to form an integral configuration. A typical configuration for a Westinghouse rack of this design is shown in Figure 2-7. Each rack module is provided with leveling pads which contact the spent fuel pool floor and are remotely adjustable from above through the cells at installation. The modules are neither anchored to the floor nor braced to the pool walls.

The fuel rack assembly consists of three major sections which are the leveling pad assembly, the lower and upper grid assembly and the cell assembly. Figure 2-8 illustrates these sections.

The major components of the leveling pad assembly are the leveling pad and the leveling pad screw. The top of the leveling pad is welded to the support plate. The leveling pad assemblies transmit the loads to the pool floor and provide a sliding contact. There are eight leveling pad assemblies for each rack assembly. The leveling pad screw permits the leveling adjustment of the rack.

The lower grid attaches the cell assembly to the support plate. The lower grid consists of box-beam members and the support plate. The bottom of the cell assembly is welded to the lower grid. The upper grid consists of the box-beam members. The upper part of the cell assembly is welded to the upper grid. The upper and lower grid assemblies maintain the precise center-line to center-line spacing between the cells and provide the structural connections between the cells to form a fuel rack assembly.

The major components of the cell assembly are the fuel assembly cell, the Boraflex (neutron absorbing) material, and the wrapper.

The inside dimension of the cell is 8.75." A wrapper is attached to the outside of the cell by spot welding along the entire length of the wrapper. The wrapper covers the Boraflex material, and also provides for venting of the Boraflex to the pool environment.

The following information applies to the spent fuel racks to be installed at H. B. Robinson:

Number of Cells	368
Number of Rack Arrays	1 - 8 x 10 3 - 8 x 12

Poison Material	Boraflex 0.02 $gm^{10}B/cm^2$ Vented to pool environment
Cell Center-to-Center Spacing	10.5 in.
Type of Fuel	Westinghouse 15 x 15 and Exxon 15 x 15, 3.9 weight percent enrichment (maximum)
Rack Assembly Dimension and Weight	8 x 10 - 84" x 105" x 176" - 22,000 lbs. 8 x 12 - 84" x 126" x 176" - 26,400 lbs.

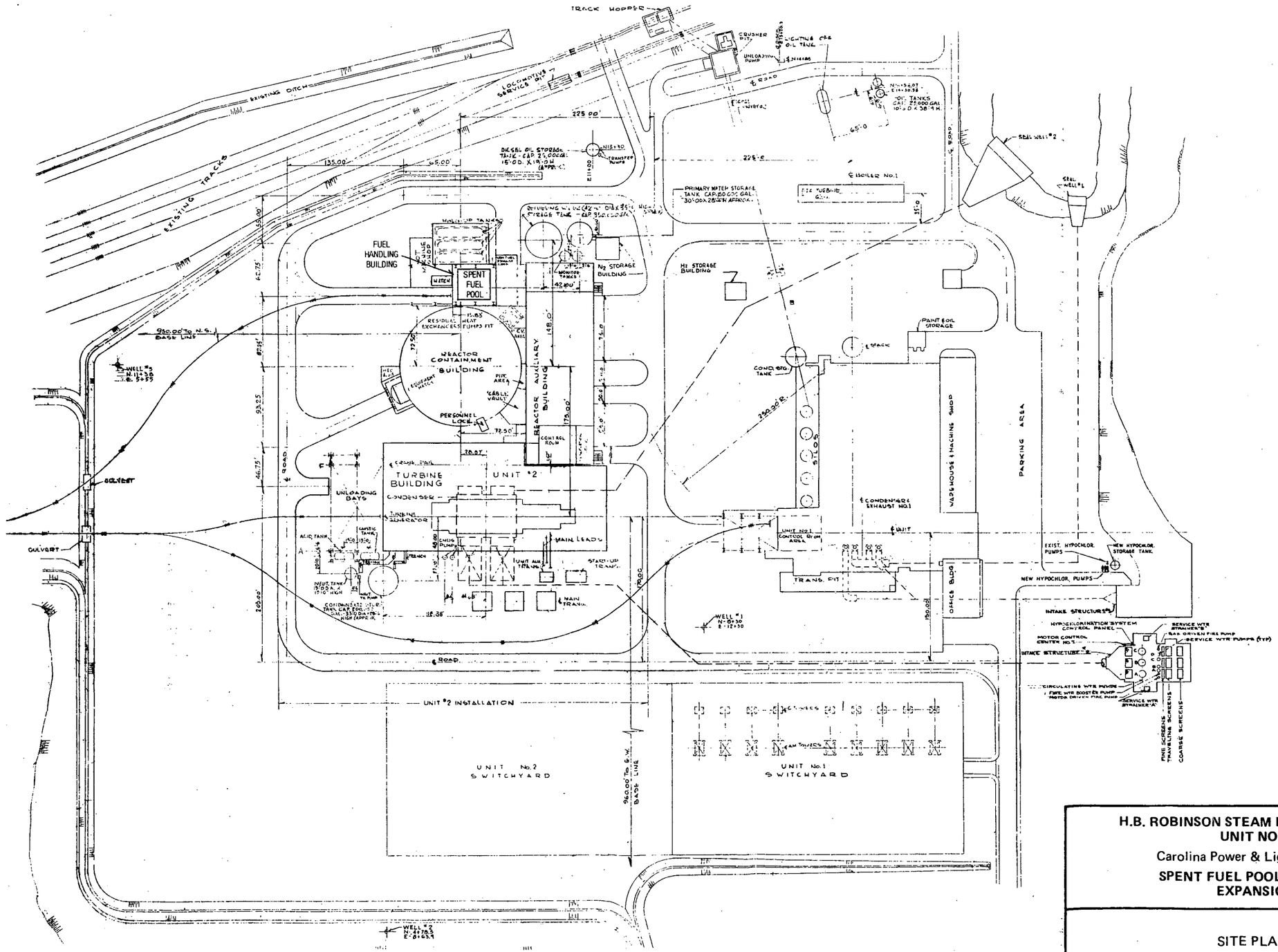

H.B. ROBINSON STEAM ELECTRIC PLANT
UNIT NO. 2

Carolina Power & Light Company

SPENT FUEL POOL STORAGE EXPANSION

SITE PLAN

FIGURE 2-1

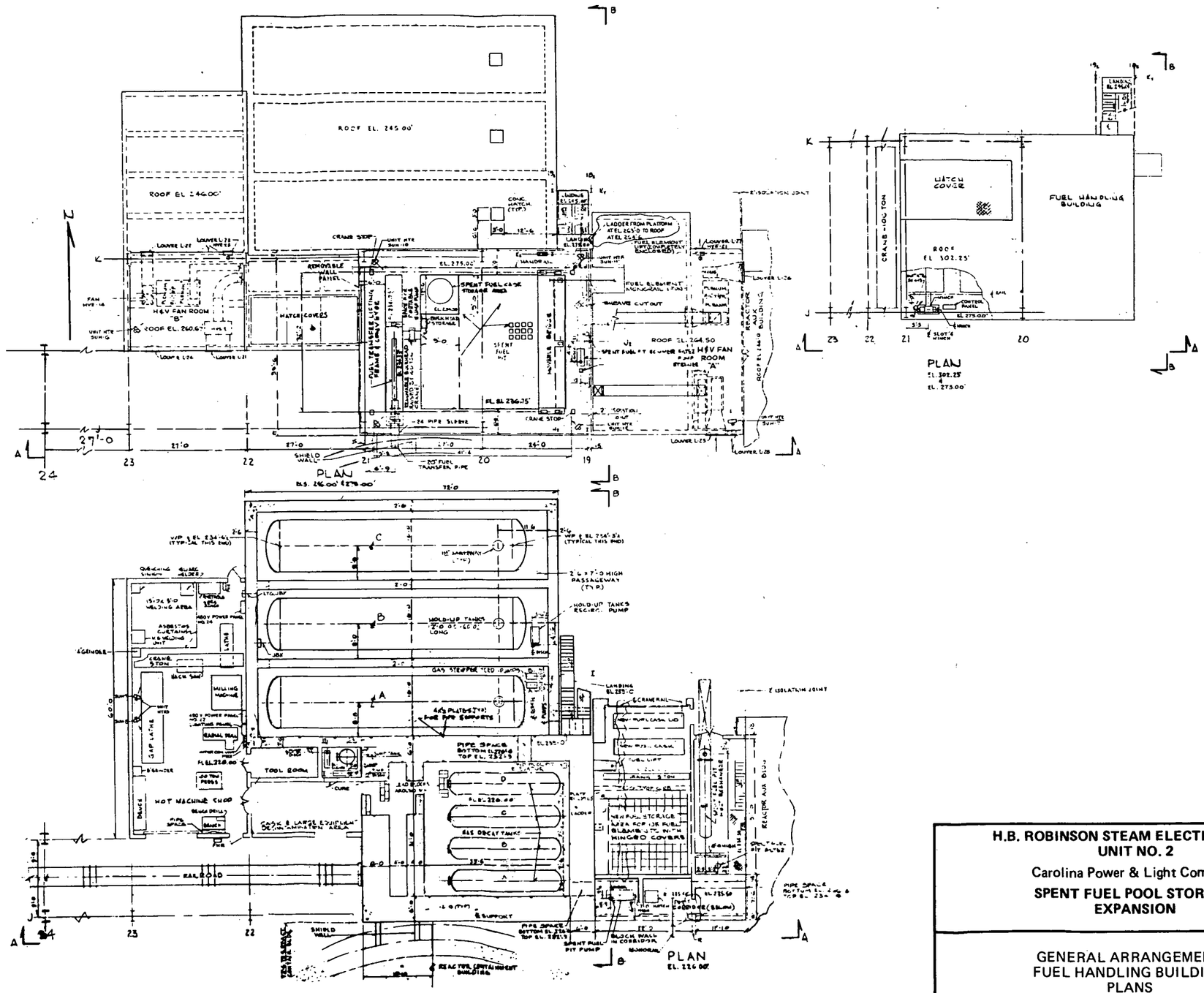

H.B. ROBINSON STEAM ELECTRIC PLANT
UNIT NO. 2

Carolina Power & Light Company

SPENT FUEL POOL STORAGE EXPANSION

GENERAL ARRANGEMENT
FUEL HANDLING BUILDING
PLANS

FIGURE 2-2

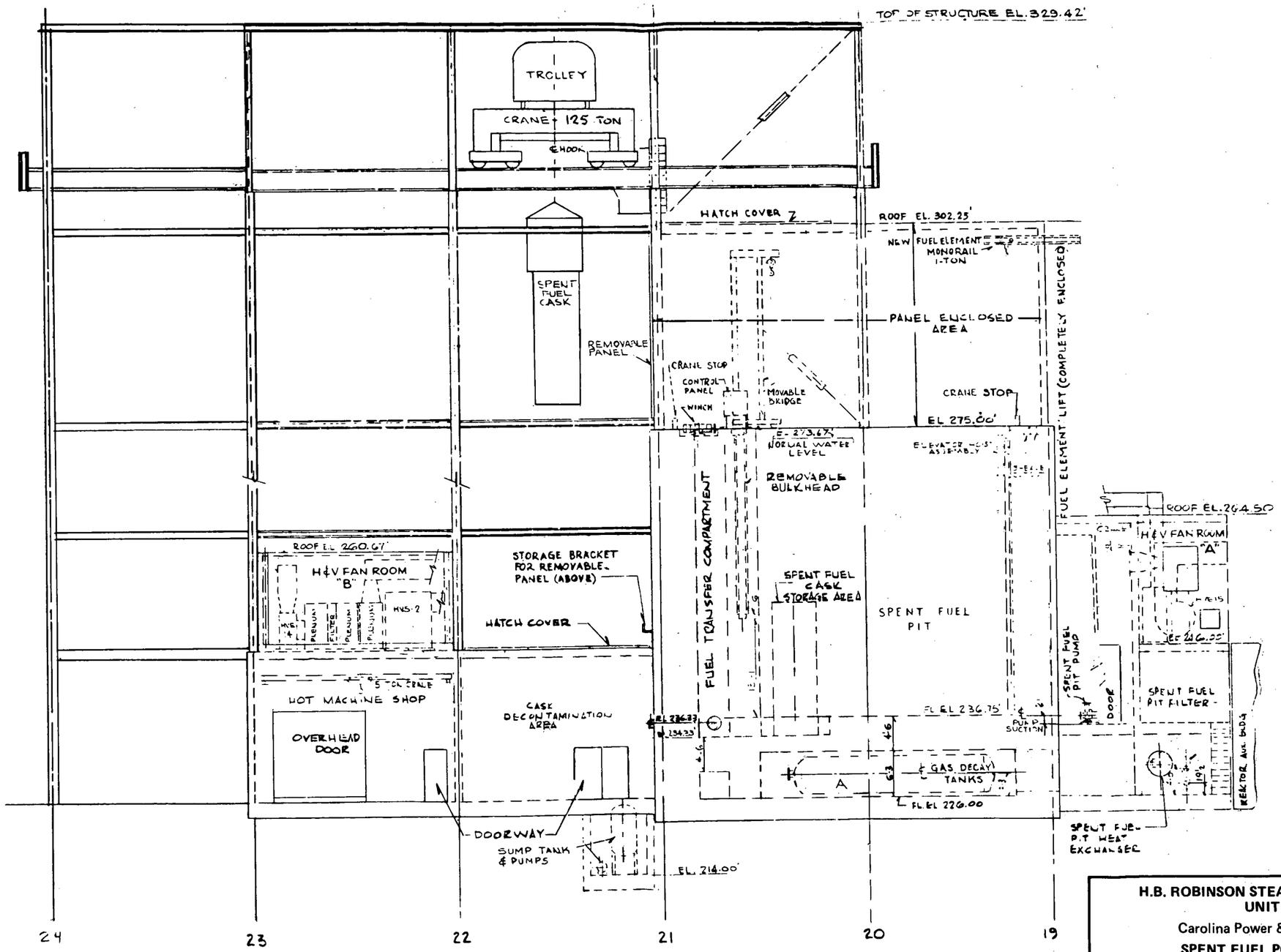

SECTION A-A

H.B. ROBINSON STEAM ELECTRIC PLANT
UNIT NO. 2

Carolina Power & Light Company

SPENT FUEL POOL STORAGE EXPANSION

GENERAL ARRANGEMENT
FUEL HANDLING BUILDING
SECTION A-A

FIGURE 2-3

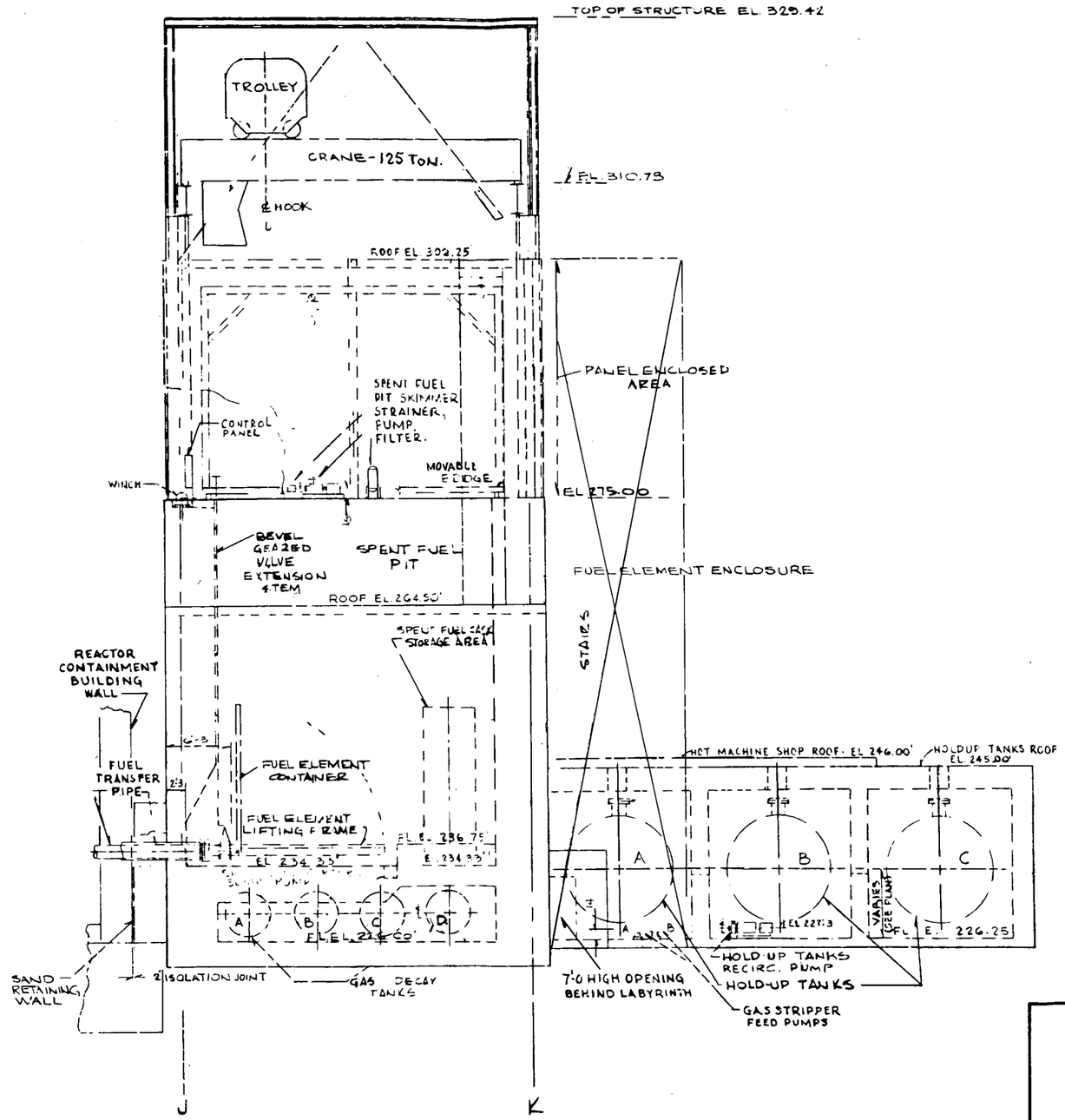

SECTION B-B

H.B. ROBINSON STEAM ELECTRIC PLANT
UNIT NO. 2

Carolina Power & Light Company

SPENT FUEL POOL STORAGE EXPANSION

GENERAL ARRANGEMENT
FUEL HANDLING BUILDING
SECTION B-B

FIGURE 2-4

H. B. ROBINSON STEAM
ELECTRIC PLANT, UNIT NO. 2

Carolina
Power & Light Company

SPENT FUEL POOL
STORAGE EXPANSION

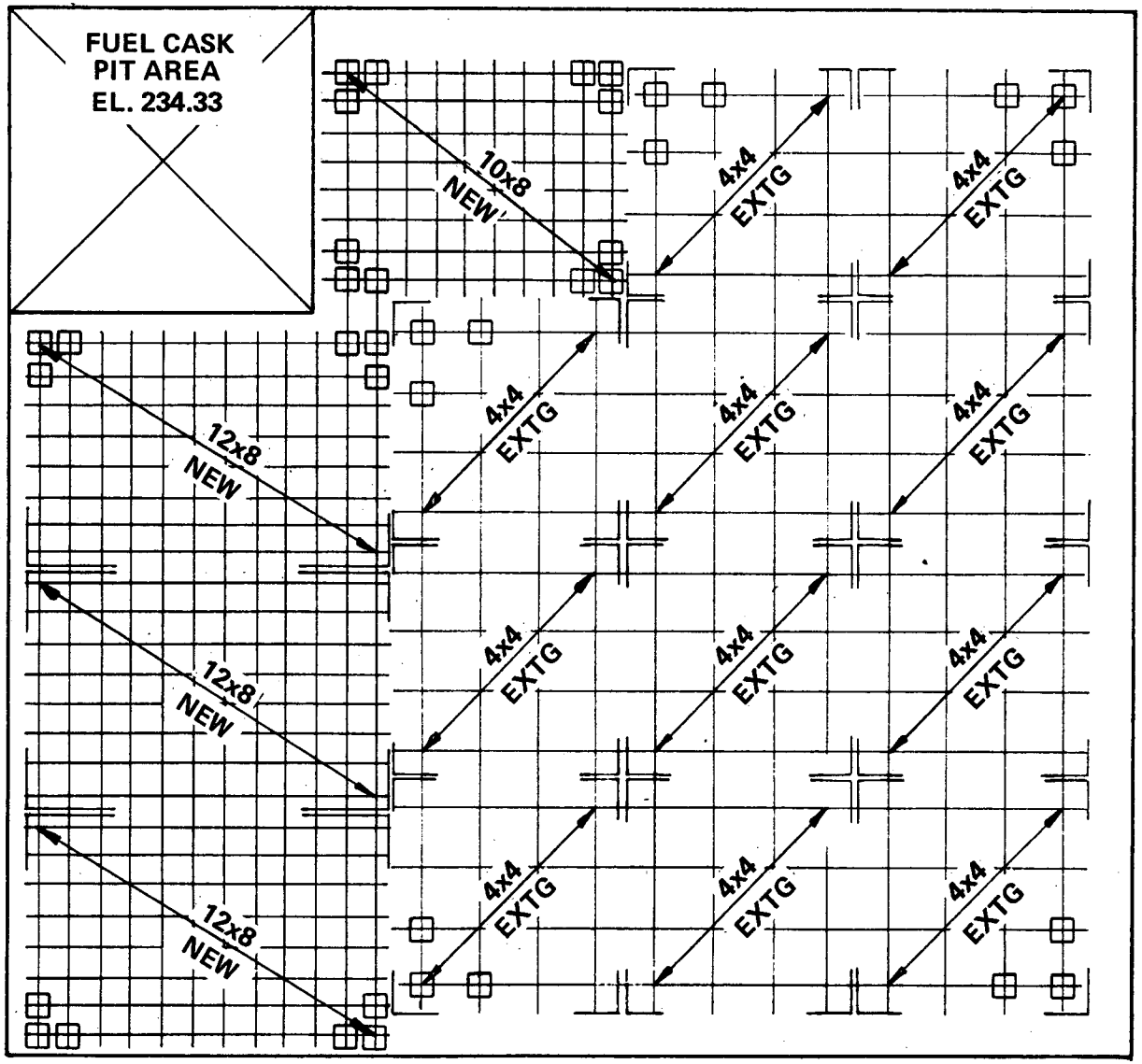

PLAN AT EL. 236.75

REMAINING EXISTING RACKS	176
NEW RACKS	*368
TOTAL	544

*INCLUDES 10 SPARE

SPENT FUEL STORAGE RACK ARRANGEMENT

FIGURE 2-5

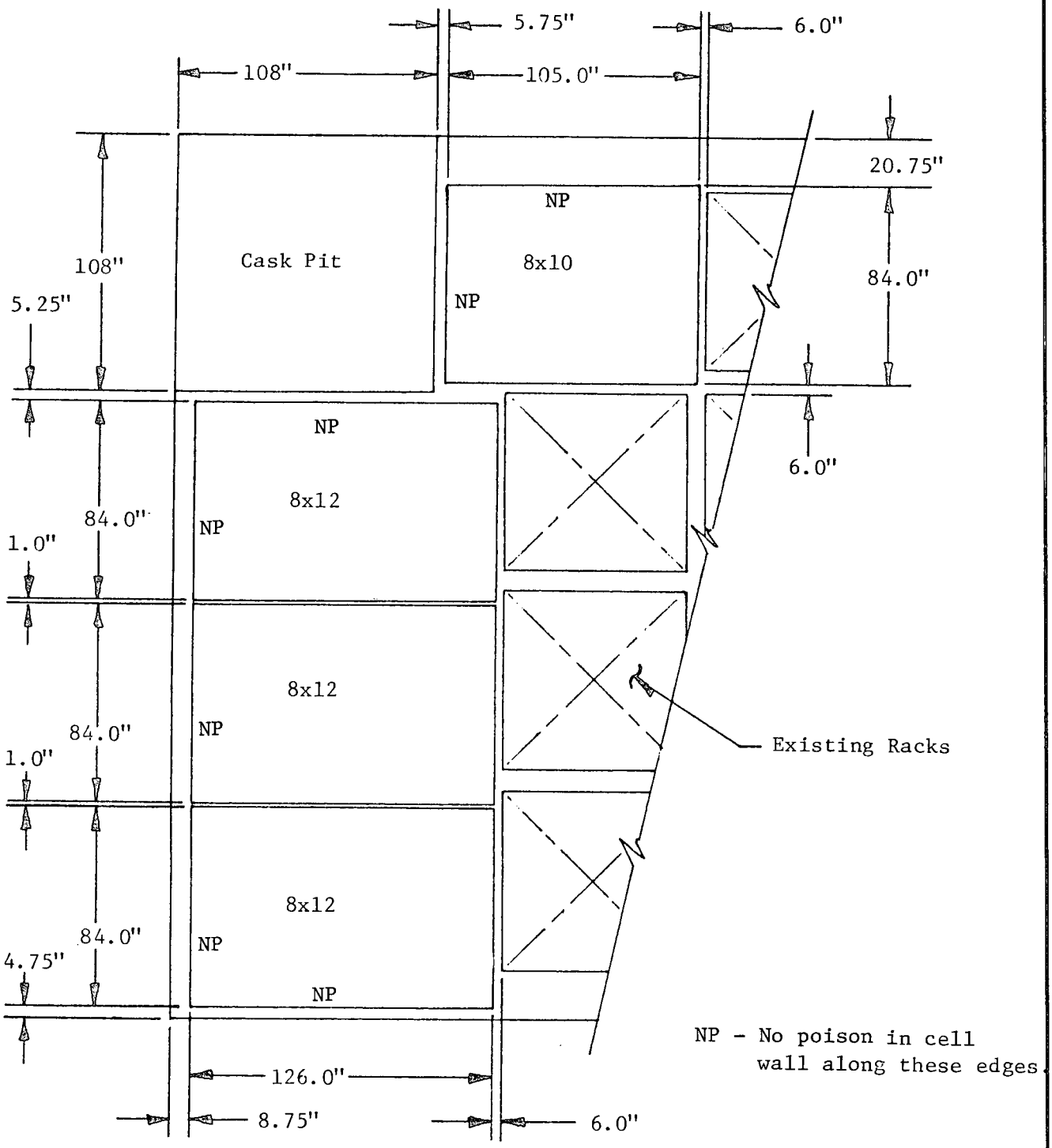

H. B. ROBINSON STEAM ELECTRIC PLANT, UNIT NO. 2 Carolina Power & Light Company **SPENT FUEL POOL STORAGE EXPANSION**	HIGH DENSITY FUEL RACK SPACING AND POISON ARRANGEMENT	**FIGURE** 2-6

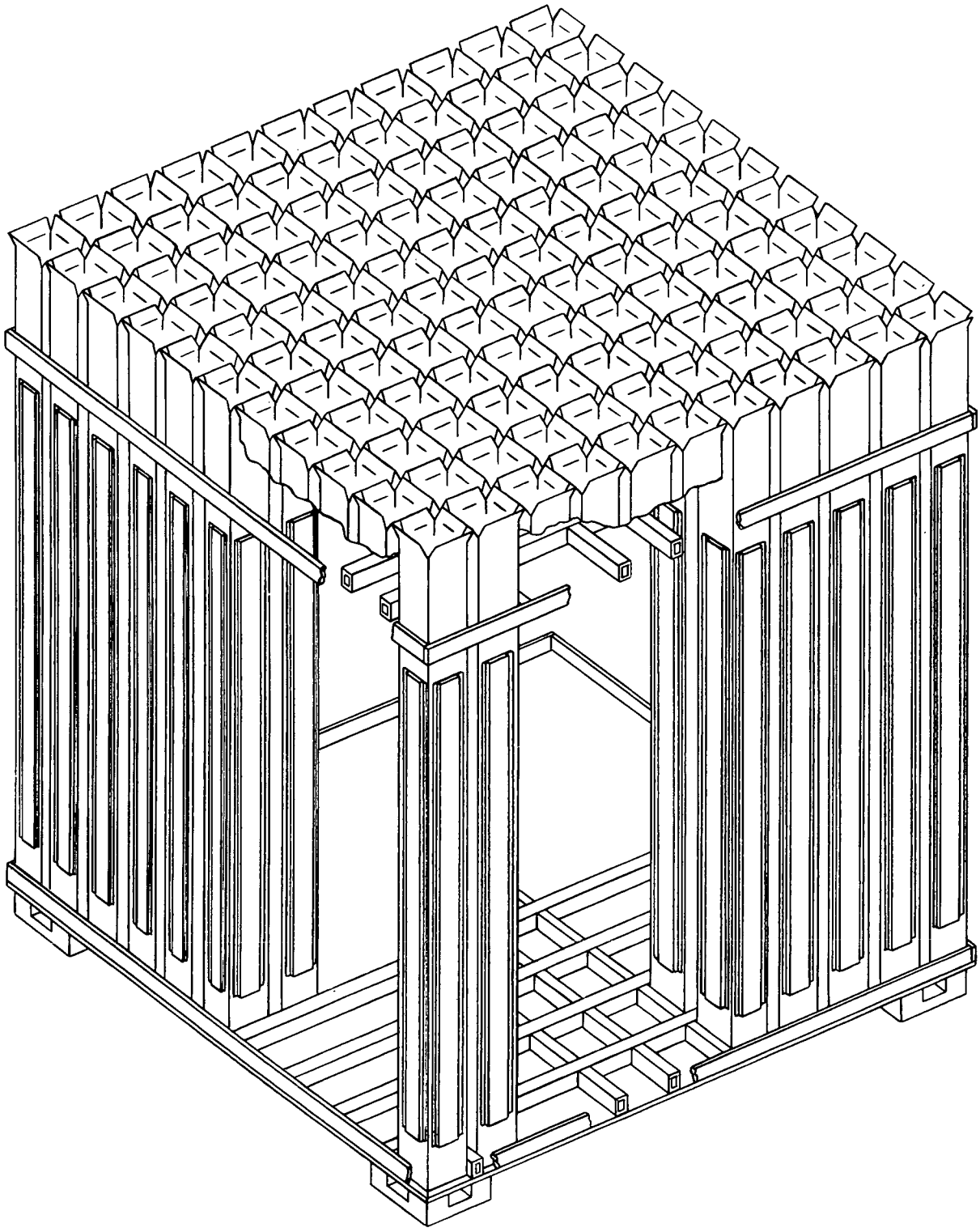

H. B. ROBINSON STEAM ELECTRIC PLANT, UNIT NO. 2 Carolina Power & Light Company **SPENT FUEL POOL STORAGE EXPANSION**	TYPICAL FUEL STORAGE RACK MODULE	**FIGURE** 2-7

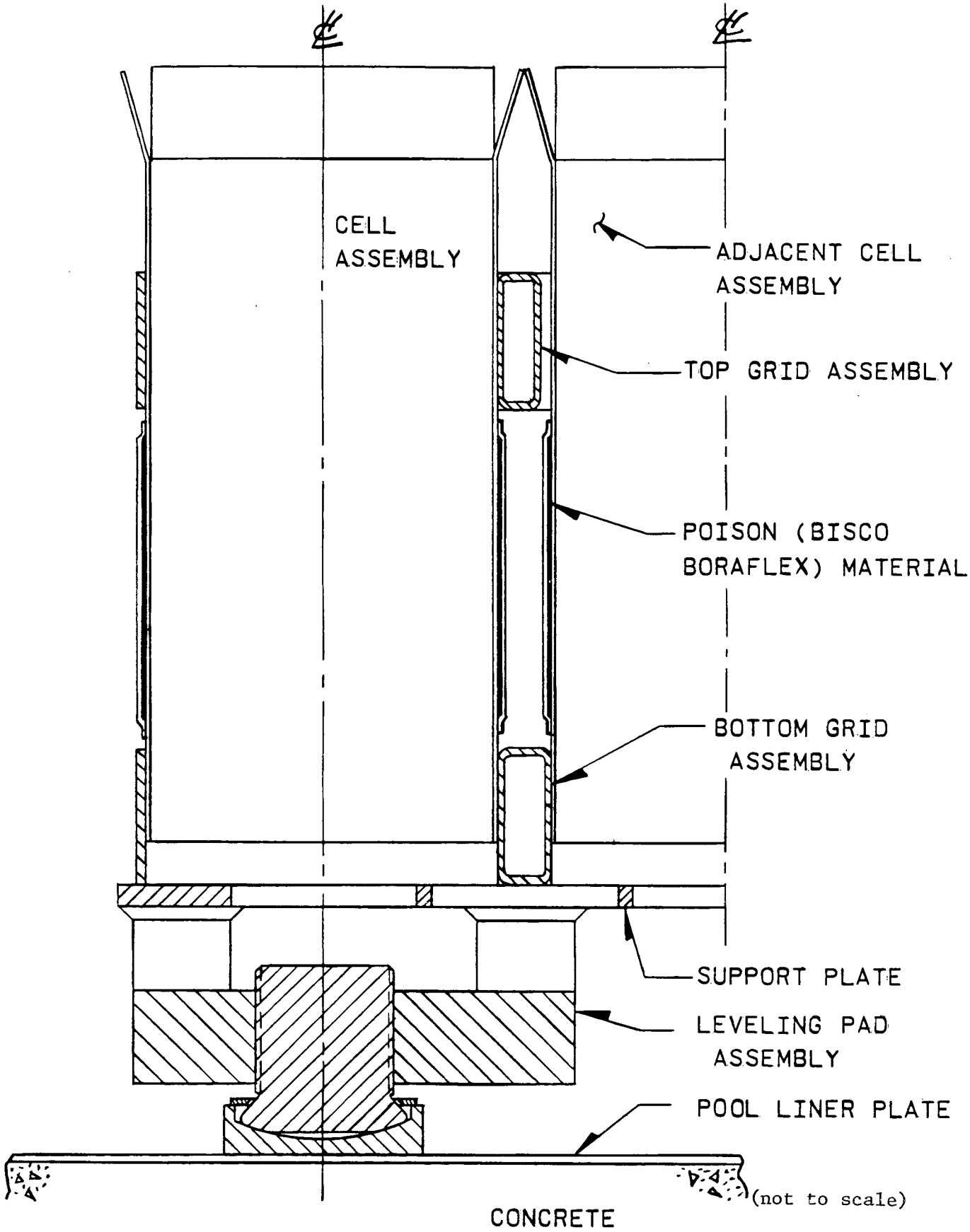

H. B. ROBINSON STEAM ELECTRIC PLANT, UNIT NO. 2 Carolina Power & Light Company SPENT FUEL POOL STORAGE EXPANSION	FUEL RACK ASSEMBLY	FIGURE 2-8

3.0 DESIGN BASES

The new spent fuel storage system was designed to conform to the applicable provisions of the following codes, standards, regulations and regulatory guidance:

1. General Design Criterion 2 (per 10CFR50, Appendix A) as related to components important to safety being capable of withstanding the effects of natural phenomena.

2. General Design Criterion 3 as related to protection against fire hazards.

3. General Design criterion 4 as related to components being able to accommodate the effects of and to be compatible with the environmental conditions associated with normal operation and postulated accidents.

4. General Design Criterion 62 as related to the prevention of criticality by physical systems.

5. Regulatory Guide 1.13 as it relates to the fuel storage facility design to prevent damage resulting from the Safe Shutdown Earthquake and to protect the fuel from mechanical damage.

6. Regulatory Guide 1.29 as related to the seismic design classification of facility components.

7. Regulatory Guide 1.60 as related to design response spectra.

8. Regulatory Guide 1.61 as related to damping factors.

9. Regulatory Guide 1.92 as related to combination of loads for storage rack seismic analysis.

10. Regulatory Guide 1.124 as related to rack component supports.

11. 10CFR20.

12. ASME Section III.

13. Branch Technical Position ASB 9-2 contained in the Standard Review Plan.

14. 10CFR100.

15. ACI 318-63 as related to the concrete structure of the fuel pool.

16. ANSI N16.1 - 1975 as related to the double contingency principle.

17. ANSI N45.2.11, 1974

4.0 MECHANICAL AND STRUCTURAL CONSIDERATIONS

The purpose of the seismic and stress analysis is to analyze the Westinghouse poison spent fuel rack module under various loading conditions. The racks are evaluated for both operating basis earthquake (OBE) and safe shutdown earthquake (SSE) conditions and meet Seismic Category I requirements. A detailed stress analysis is performed to verify the acceptability of the critical load components and paths under normal and faulted conditions. The racks rest freely on the pool floor and are evaluated to ensure that under various loading conditions they do not impact each other, nor do they impact the pool walls.

4.1 SEISMIC ANALYSIS

The dynamic response of the fuel rack assembly during a seismic event is the condition which produces the governing loads and stresses on the building structure. The dynamic response, internal stresses, and loads are obtained from a seismic analysis which is performed in two phases. The first phase is a time history analysis on a simplified nonlinear finite element model. The second phase is a response spectrum analysis of a detail rack assembly finite element model shown in Figure 4-1. The damping values used in the seismic analysis are two percent damping for OBE and four percent damping for SSE as specified in NRC Regulatory Guide 1.61.

The simplified nonlinear finite element model is used to determine the fuel rack response for full, partially filled, and empty fuel assembly loading conditions. This nonlinear model has the structural characteristics of a submerged rack assembly. The nonlinearities of the fuel rack assembly which are accounted for in the model are due to changes in the gap between the fuel cell and the fuel assembly, the boundary conditions of the fuel rack support locations and energy losses at the support locations.

The WECAN computer program (1,2) is used to determine the nonlinear time history response of the fuel assembly/fuel rack system. The effective fuel mass, fuel assembly to cell impact loads, and overall rack response is obtained from the nonlinear time history results.

The detail model is a three-dimensional finite element representative of a rack assembly consisting of discrete three-dimensional beams interconnected at a finite number of nodal points. The results of the nonlinear time history model are incorporated in the detail model. Since the detail model does not account for the nonlinear effect of a fuel assembly impacting the cell and the hydrodynamic restoring force, the internal loads and stresses for the rack assembly obtained from this model are corrected by load correction factors. The load correction factor is derived from the nonlinear model results and is applied to the components in the stress analysis. The responses of the model from accelerations in three directions are combined by the SRSS method in the stress analysis. The loads in the four major components (support plate/leveling pad assembly, bottom grid, top grid, and fuel cell) are examined, and the maximum loaded section of each of these components was found. These maximum loads from the detail model are used in the stress analysis to obtain the stresses within the rack assembly.

4.2 STRESS ANALYSIS

The stress analysis for the racks is performed using the following load combinations specified in the "NRC Position For Review and Acceptance of Spent Fuel Storage and Handling Applications."

Elastic Analysis	Acceptance Limits
(1) $D + L$	Normal Limits of NF 3231.1a
(2) $D + L + E$	Normal Limits of NF 3231.1a
(3) $D + L + T_o$	Lesser of 2 S_y or S_u Stress Range
(4) $D + L + T_o + E$	Lesser of 2 S_y or S_u Stress Range
(5) $D + L + T_a + E$	Lesser of 2 S_y or S_u Stress Range
(6) $D + L + T_a + E'$	Faulted Condition Limits of NF 3231.1c

Definitions:

D - Dead loads or their related internal moments and forces including any permanent equipment and hydrostatic loads.

L - Live loads or their related internal moments and forces including any movable equipment loads.

T_o - Thermal effects and loads during normal operating or shutdown conditions, based on the most critical transient or steady-state condition.

T_a - Thermal effects and loads during highest temperature associated with the postulated abnormal design condition.

E - Loads generated by the operating basis earthquake.

E' - Loads generated by the safe shutdown earthquake.

The thermal loads due to rack expansion relative to the pool floor are negligible since the support pads are not structurally restrained in the lateral direction. The major seismic loads are produced by the operational basis earthquake (OBE) and safe shutdown earthquake (SSE) events.

It is noted from the seismic analysis that the magnitude of stresses vary considerably from one geometrical location to the other in the model. Consequently, the maximum loaded cell assembly, grid assembly and the leveling pad assembly are analyzed. Such an analysis envelopes the other areas of the rack assembly.

The maximum seismic loads due to x direction and y direction shock, are independently generated and are combined by the square-root-sum-of-the-squares method to produce the resultant loads. The resultant loads are applied to the

maximum loaded cell assembly, grid assembly and the leveling pad assembly to obtain the margins of safety.

The loads described in the seismic analysis section are corrected by load correction factors derived from the nonlinear analysis. The computed stresses are below the allowable stresses as required by the ASME B&PV Code, Section III, Subsection NF.

A fuel handling crane uplift analysis was performed which demonstrated that the rack can withstand the maximum uplift load of 3000 pounds of the fuel handling crane without violating the criticality acceptance criteria. Two accident loading conditions were postulated. The first condition assumed that the uplift load was applied to a fuel cell. The second condition assumed that the load was applied to the top grid.

A fuel assembly drop accident analysis was also performed to ensure that, in the unlikely event of dropping a fuel assembly, accidental deformation to the rack does not cause the criticality acceptance criteria to be violated, and the spent fuel pool liner will not be perforated. The accident conditions and final results are discussed in Table 4-1. (To be provided approximately March, 1981).

Administrative controls prevent heavy loads from being carried over the spent fuel storage racks.

In summary, the results of the seismic and structural analysis show that the H. B. Robinson spent fuel storage racks meet all the structural acceptance criteria adequately.

4.3 FUEL BUNDLE/MODULE IMPACT EVALUATION

An analysis is performed to evaluate the effect of an impact load due to fuel assembly and fuel storage cell interaction during a seismic event. The fuel rack system consists of an array of cells which form the fuel rack structure and fuel assemblies. The fuel rack system is located in the spent fuel pool and is submerged in water.

Since the fuel assembly is stored within the cell, the gap between the fuel assembly grid and cell changes (i.e., opens and closes) during a seismic event. From the equation of motion for such a system, it is evident that the fuel rack system is nonlinear. This condition necessitates that a transient dynamic analysis be performed.

The mathematical features of the nonlinear fuel rack model facilitate the determination of the fuel assembly/cell interaction and hydrodynamic mass (fluid mass) effects on the fuel rack response during seismic excitation. Results of the analysis, which takes into consideration the gap and frictional

effects, are expected to show that the racks experience minimal sliding during seismic excitation. The interaction between the fuel assembly and the fuel storage cell produces impact loads which are within acceptable design limits. This analysis will be completed approximately March, 1981.

4.4 EFFECTS OF INCREASED LOADS ON THE FUEL POOL LINER AND STRUCTURES

The new spent fuel racks are free standing and are not connected to either the walls or floor of the pool as are the existing racks. Therefore, the effect of the new racks on the wall liner is less than that imposed by the existing racks. The sliding shear forces imparted to the floor liner under postulated earthquake conditions exceed those produced under the previous design; however, the sliding shear is well within the allowable working stresses of the liner material.

A preliminary investigation indicates that with the addition of two steel columns under the fuel pool floor, as described in Section 6.0, the structure will have adequate capacity to carry the increased loads imposed by the new high density spent fuel storage racks. A final verification will be performed and the results will be provided when available.

The spent fuel pool structure has been evaluated for new loads based on the following criteria:

a) Building Code Requirements for Reinforced Concrete. The ACI 318-63 Code.

b) H. B. Robinson Unit No. 2 Final Safety Analysis Report.

c) USNRC Operating Technical Position for Review and Acceptance of Spent Fuel Storage and Handling Applications.

d) American Standards Association ASA A58.1-1955.

Based on the above criteria the following is a listing of the primary loads considered in the structural evaluation.

a) The dead weight of the structural elements including crane column dead loads and the hydrostatic load from the pool water (D)

b) Live load including crane column live load (fuel cask) with impact and thrust (L_o)

c) Live load of fuel racks and fuel elements (L_1)

d) Equipment load (Cask) (L_2)

e) Wind Load N-S (W-NS)

Wind Load S-N (W-SN)

Wind Load E-W (W-EW)

Wind Load W-E (W-WE)

f) Cask drop equivalent static load on slab (FC)

g) OBE N-S + OBE Vertical (EO-NS)

OBE S-N + OBE Vertical (EO-SN)

OBE E-W + OBE Vertical (EO-EW)

OBE W-E + OBE Vertical (EO-WE)

SSE N-S + SSE Vertical (ESS-NS)

SSE S-N + SSE Vertical (ESS-SN)

SSE E-W + SSE Vertical (ESS-EW)

SSE W-E + SSE Vertical (ESS-WE)

h) A thermal loading (T_o) due to a pool water temperature of 150°F resulting in a Δt = 80°F. The shrinkage of the concrete that has occurred since construction was calculated conservatively as an equivalent difference of 22°F thus reducing the effective Δt = 80°-22°=58°F.

Load combinations are in accordance with ACI-318-63 Part IV B.

The following ten load combinations that produce the most severe loading to this structure are used in the evaluation.

a) $U = 1.5D + 1.8\ (L_o + L_1) + 1.0FC$ (L_o = 0 at cask impact)

b) $U = 1.5D + 1.8\ (L_o + L_1)$

c) $U = 1.25\ (D + L_o + L_1 + L_2) + 1.25$ W-SN

d) $U = 1.25\ (D + L_o + L_1 + L_2) + 1.25$ W-EW

e) $U = 1.25\ (D + L_1 + \text{EO-NS}) + 1.0$ FC

f) $U = 1.25\ (D + L_1 + \text{EO-SN}) + 1.0$ FC

g) $U = 1.25\ (D + L_1 + \text{EO-EW}) + 1.0$ FC

h) $U = 1.25\ (D + L_1 + \text{EO-WE}) + 1.0$ FC

i) $U = 1.05\ D + 1.0L_1 + 1.0$ ESS-SN + 1.0 FC

j) $U = 1.05\ D + 1.0L_1 + 1.0$ ESS-EW + 1.0 FC

For the preliminary investigation a three dimensional finite element computer model was developed for the Spent Fuel Pool Structure. Plate elements were utilized to simulate the reinforced concrete wall and slab structure. The computer model assumed the boundary to be fixed between fuel pool walls and supporting mat.

The analysis was performed using the MRI/STARDYNE (3) Structural Analysis System (which is in the public domain). The static analysis package of MRI/Stardyne - "STAR" was utilized to evaluate the internal forces and displacements induced in the spent fuel pool structure due to the primary loadings. Load combinations and force envelopes were developed using "STAR" output data exclusive of thermal loads. Internal forces due to thermally induced loads were added to maximum mechanical internal forces using cracked section analysis methods. A summary or envelope of maximum moments, axial forces, and shears in the critical slab elements indicate that certain slab elements require additional support when applying "ultimate strength" criteria.

When a preliminary reanalysis of the fuel pool structure was performed with the steel column supports it was found that the structure will adequately support the new loads. A final verification of the results will be provided when available.

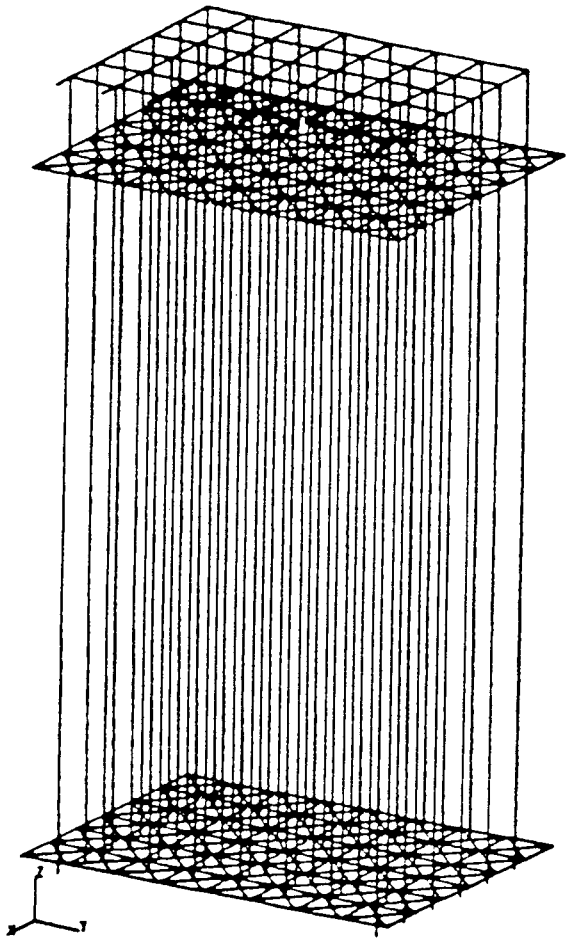

H. B. ROBINSON STEAM ELECTRIC PLANT, UNIT NO. 2 Carolina Power & Light Company SPENT FUEL POOL STORAGE EXPANSION	SPENT FUEL RACK DETAIL MODEL FOR SEISMIC ANALYSIS	FIGURE 4-1

5.0 MATERIAL CONSIDERATIONS

Construction materials conform to the requirements of ASME B&PV Code, Section III, Subsection NF. All the materials used in the construction are compatible with the storage pool environment and do not contaminate the fuel assemblies or the pool water. The racks are constructed from type 304 stainless steel.

The neutron absorber material, Boraflex, used in the H. B. Robinson spent fuel rack construction is manufactured by Brand Industrial Services, Inc., and fabricated to safety related nuclear criteria of 10CFR50, Appendix B. Boraflex is a silicone based polymer containing fine particles of boron carbide in a homogenous, stable matrix. Boraflex contains a minimum ^{10}B areal density of 0.02 gm/cm^2.

Boraflex has undergone extensive testing to study the effects of gamma irradiation in various environments, and to verify its structural integrity and suitability as a neutron absorbing material.(1) Tests were performed at the University of Michigan exposing Boraflex to 1.03×10^{11} rads gamma radiation with a substantial concurrent neutron flux in borated water. These tests indicate that Boraflex maintains its neutron attenuation capabilities before and after being subjected to an environment of borated water and 1.03×10^{11} rads gamma radiation.(2)

Long term borated water soak tests at high temperatures were also conducted.(3) It was shown that Boraflex withstands a borated water immersion of 240°F for 260 days without visible distortion or softening. Boraflex maintains its functional performance characteristics and shows no evidence of swelling or loss of ability to maintain a uniform distribution of boron carbide.

During irradiation, a certain amount of gas may be generated in the Boraflex. A conservative evaluation of the effect of gas generation on the spent fuel pool building atmosphere indicates that the maximum gas generation would be less than 0.01 percent of the total room volume. Additionally, the majority of gas generation is nitrogen, oxygen and CO_2.

The actual tests verify that Boraflex maintains a long-term material stability and mechanical integrity, and can be safely utilized as a poison material for neutron absorption in spent fuel storage racks.

6.0 INSTALLATION

The H. B. Robinson Unit No. 2 spent fuel pit is now in use for storage of spent fuel. Removal of a portion of the existing fuel storage racks and installation of the replacement High Density Fuel Storage System (HDFSS) modules will be accomplished without emptying the pool. Fuel shuffling will be required to permit the changeout of the storage racks.

It will be necessary to provide additional support for the fuel pool floor. This will be accomplished by provision of two structural steel columns in the gas decay tank storage room which is below the fuel pool. Column configuration is indicated in Figure 6-1. The columns will transmit their load to the existing building slab and will be installed utilizing drilled-in anchor bolts and dry pack grouting beneath the column base plates. Stressing the columns is expected to be accomplished by lowering the water level in the pool approximately seven (7) feet during installation. After installing the columns, the pool will be returned to normal water level to accomplish the required post stress. This work will be done prior to any increase in the load.

The existing overhead cask crane will be used to transport the racks into the fuel handling building. The existing fuel handling bridge crane will not be used to handle the rack components during the changeout. A temporary traveling bridge and hoist will be provided on the fuel handling bridge rails of sufficient capacity and headroom to remove the existing racks and to install the new HDFSS modules. The temporary traveling bridge will be designed such that it will not interfere with usage of the existing fuel handling bridge crane. Measures will be taken to eliminate the possiblility of interference or collision between the cranes. The hoisting sequence will be planned to prevent transporting loads over stored spent fuel during the modification.

The HDFSS modules are designed to be free-standing with a bottom-supported design. They rest on integral leveling pads on the floor of the fuel storage pool. Three 8-cell by 12-cell modules and one 8-cell by 10-cell module will be installed. The modules are designed such that the edges facing the pool walls will not contain any poison (Figure 2-6). Prior to installation,the racks will need to be checked for proper orientation to ensure that the periphery edges are non-poisoned.

Space will be provided for the 8-cell by 10-cell free-standing module by removal of a single originally installed 4-cell by 4-cell rack east of the cask area. Space for the three 8-cell by 12-cell free-standing modules will be provided by removing three 4-cell by 4-cell originally installed racks and four 3-cell by 3-cell mechanically restrained racks which were installed in 1976 after the pool was in service. The support feet on the original racks are welded to pads on the floor of the pool, and the racks installed in 1976 are mechanically restrained from the pool walls and wedged between original racks.

It will be necessary to shuffle spent fuel to ensure that the maximum possible distance between divers, required during the installation sequence, and stored spent fuel will be maintained during the removal of existing racks. In order to accomplish this, the rack occupying the area for the 8-cell by 10-cell

HDFSS module will be removed and this module will be installed prior to removal of the racks for the three 8-cell by 12-cell modules. Additional shuffling may be required between phases of the installation sequence. Operations personnel will develop detailed fuel shuffle plans.

The following is a sequence of events for performing the work associated with removal of existing racks and installation of the new high-density modules:

1. Provide an adequate work platform by installing steel plate decking over the transfer canal.

2. Erect and test the temporary traveling bridge and hoist.

3. Vacuum the pool floor and racks to the extent possible in the area of projected activity, and conduct radiation survey of projected underwater work area.

4. The removal of the originally-installed rack east of the cask pit to provide space for the 8-cell by 10-cell HDFSS module will require divers to unbolt the 4-cell by 4-cell rack to be removed from those remaining. The rack is also welded to its floor supports which will be cut by divers utilizing air operated portable hack and reciprocating saws. This rack will then be removed from the pool, decontaminated, and prepared for disposal.

5. Revacuum pool in areas where cutting was performed.

6. Survey the pool floor for obstructions, interferences, and profile in areas where new rack leveling pads will be located.

7. Check for proper orientation, install new 8-cell by 10-cell rack, level, align, and checkout.

8. Check storage cell path with dummy fuel assembly.

9. Remove the mechanically restrained racks installed in 1976. This will involve the removal of braces and struts by a combination of extension tools operated from above the pool surface with assistance from divers as required. The racks will then be lifted from the pool, decontaminated, and prepared for disposal.

10. The other three remaining originally-installed racks to be replaced will need to be removed in three sections in order to maintain maximum separation between the divers and stored spent fuel. The operation will be the same as Number 4.

11. Revacuum pool in areas where cutting was performed.

12. Survey the pool floor for obstructions, interferences, and profile in areas where rack leveling pads will be located.

13. Check for proper orientation, install new 8-cell by 12-cell racks, level, align, and checkout.

14. Check storage cell path with dummy fuel assembly.

15. Remove temporary facilities and decontaminate as required.

It is estimated that approximately 75 working days will be required to complete this work. This duration does not include time required for shuffling of stored spent fuel. Manpower requirements will fluctuate with each task; but it has been estimated that 8,200 man-hours will be utilized. For the purpose of estimating radiation exposure, this work has been further delineated with 4,900 man-hours estimated for work above the pool water surface, 300 hours of work requiring divers in the pool, 550 hours of decontamination work, 850 hours in the gas decay tank storage room, and 1600 hours of work in areas where no radiation exposure is expected. All man-hours include not only construction and operating personnel but contingency for health/physics, engineering support and Quality Assurance personnel.

Man-rem exposures were estimated for each category of work described above. Measurements based on experience indicate that average exposures above the pool normally do not exceed 5 mrem/hour, with a maximum rate expected at 8 mrem/hour. For overall purposes of calculating the total man-rem exposure for workers on the operating deck, 8 mrem/hour was utilized. Radiation at the bottom of the pool and in the cask handling areas is between 20 to 30 mrem/hour. Vacuuming, moving stored fuel, and a requirement to maintain maximum possible separation between divers and stored fuel should minimize exposure to 50 mrem/hour. Decontamination work will be accomplished utilizing hydrolasers or similar equipment. It has been estimated that the maximum exposure rate to be experienced during contamination will be 90 mrem/hour. Radiation levels normally experienced in the gas decay tank storage room are 75 mrem/hour.

Utilizing the supposition discussed in the above paragraph, it is estimated that the total man-rem exposure for this work will be 173 rem. Because the nature of this work will require specialized personnel, this exposure will be spread over several distinct crews. Methods will be applied to maintain radiation exposure as low as reasonably achievable.

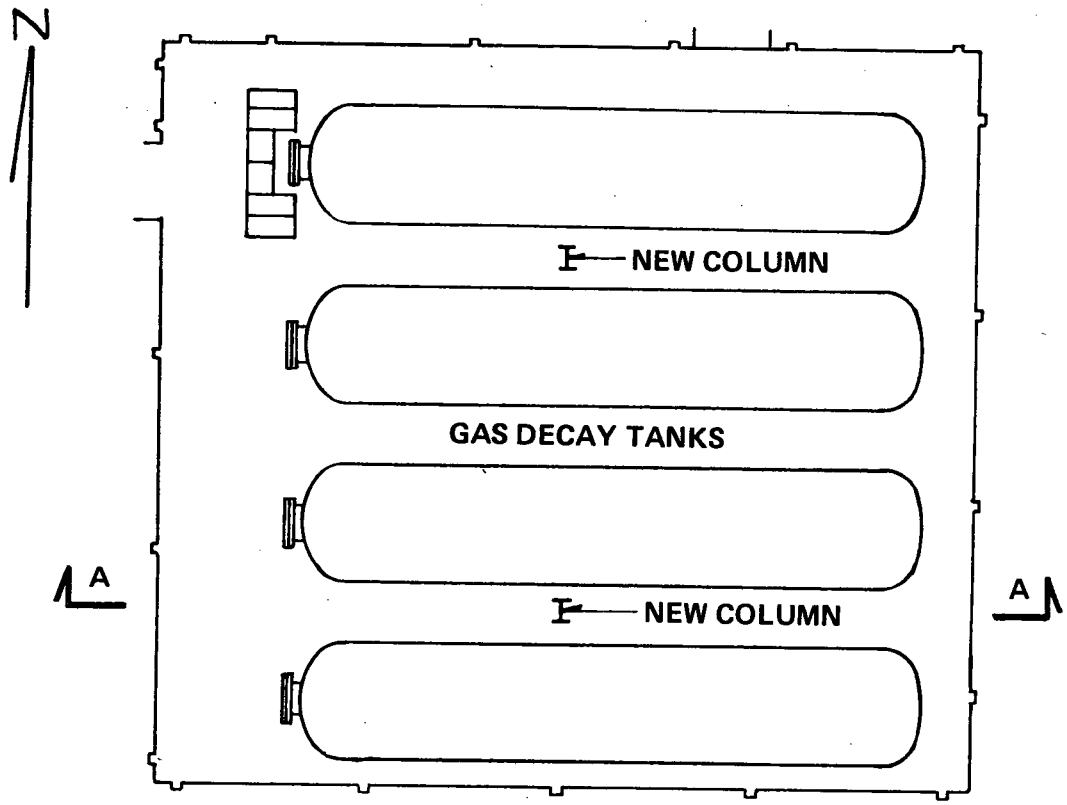

PLAN AT EL. 226.00

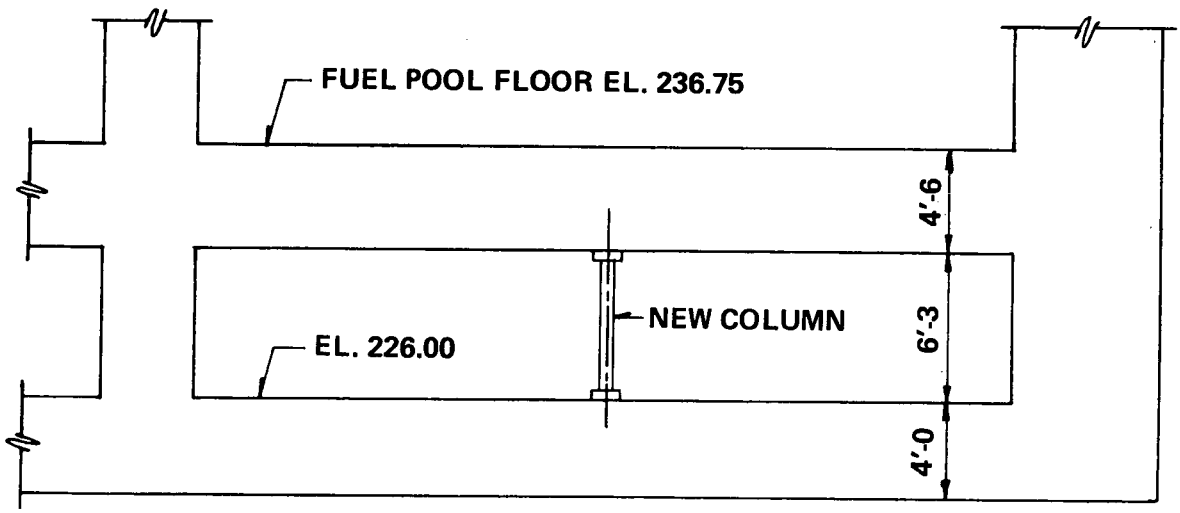

SECTION A-A

H. B. ROBINSON STEAM ELECTRIC PLANT, UNIT NO. 2 Carolina Power & Light Company SPENT FUEL POOL STORAGE EXPANSION	FUEL POOL STRUCTURAL MODIFICATIONS	FIGURE 6-1

7.0 NUCLEAR CONSIDERATIONS

7.1 NEUTRON MULTIPLICATION FACTOR

Criticality of fuel assemblies in the spent fuel storage rack is prevented by the design of the rack which limits fuel assembly interaction. This is done by fixing the minimum separation between assemblies and inserting neutron absorber materials (Boraflex) between assemblies.

The design basis for preventing criticality outside the reactor is that, including uncertainties, there is a 95 percent probability at a 95 percent confidence level that the effective multiplication factor (K_{eff}) of the fuel assembly array will be less than 0.95, as recommended in ANSI N210-1976 and in "NRC Position for Review and Acceptance of Spent Fuel Storage and Handling Applications."

The following are the conditions that are assumed in meeting this design basis.

7.2 INPUT PARAMETERS

a) The fuel assembly contains the highest enrichment authorized without any control rods or any noncontained burnable poison and is at its most reactive point in life. The enrichment of the fuel assembly is 3.9 w/o U-235 with no depletion or fission product buildup.

b) The moderator is pure water at the temperature within the design limits of the pool which yields the largest reactivity. A conservative value of 1.0 gm/cm^3 is used for the density of water. No dissolved boron is included in the water.

c) The array is either infinite in lateral extent or is surrounded by a conservatively chosen reflector, whichever is appropriate for the design. The nominal case calculation is infinite in lateral and axial extent. Poison plates are not necessary on the periphery of the rack and on one side of the long axis between modules because calculations show that this finite rack is less reactive than the nominal case infinite rack.

d) Mechanical uncertainties and biases due to mechanical tolerances during construction are treated by either using "worst case" conditions or by performing sensitivity studies and obtaining appropriate values. The items included in the analysis are:

1) Poison pocket thickness (width of the space in which the Boraflex is placed)

2) Stainless steel thickness (Type 304)

3) Can ID

4) Center-to-center spacing

The calculational method uncertainty and bias is discussed in Section 7.3.

e) Credit is taken for the neutron absorption in full length structural materials (Type 304 stainless steel) and in solid materials (Boraflex) added specifically for neutron absorption. A minimum poison loading is assumed in the poison plates and B_4C particle self shielding is included as a bias in the reactivity calculation.

7.3 GEOMETRY, BIAS, AND UNCERTAINTY

The calculation method and cross-section values are verified by comparison with critical experiment data for assemblies similar to those for which the racks are designed. This benchmarking data is sufficiently diverse to establish that the method bias and uncertainty will apply to rack conditions which include strong neutron absorbers, large water gaps and low moderator densities.

The design method which insures the criticality safety of fuel assemblies in the spent fuel storage rack uses the AMPX system of codes[1,2] for cross-section generation and KENO IV[3] for reactivity determination.

The 218 energy group cross-section library[1] that is the common starting point for all cross-sections used for the benchmarks and the storage rack is generated from ENDF/B-IV data. The NITAWL program[2] includes, in this library, the self-shielded resonance cross-sections that are appropriate for each particular geometry. The Nordheim Integral Treatment is used. Energy and spatial weighting of cross-sections is performed by the XSDRNPM program[2] which is a one-dimensional S_N transport theory code. These multi-group cross-section sets are then used as input to KENO IV[3] which is a three-dimensional Monte Carlo theory program designed for reactivity calculations.

A set of 27 critical experiments has been analyzed using the above method to demonstrate its applicability to criticality analysis and to establish the method bias and variability. The experiments range from water moderated, oxide fuel arrays separated by various materials (Boral, steel, water) that simulate LWR fuel shipping and storage conditions[4,5] to dry, harder spectrum uranium metal cylinder arrays with various interspersed materials[6] (plexiglas, steel and air) that demonstrate the wide range of applicability of the method. (See Table 7-1 for summary of these experiments.)

The average K_{eff} of the benchmarks is 0.9998 which demonstrates that there is no bias associated with the method. The standard deviation of the K_{eff} values is 0.0057 Δk. The 95/95 one sided tolerance limit factor for 27 values is 2.26. Thus, there is a 95 percent probability with a 95 percent confidence level that the uncertainty in reactivity, due to the method, is not greater than 0.013 Δk.

The total uncertainty to be added to a criticality calculation is:

$$TU = [\ (KS)^2_{\ method} + (KS)^2_{\ nominal}\ ]^{1/2}$$

where $(KS)_{method}$ is 0.013 as discussed above, and $(KS)_{nominal}$ is the statistical uncertainty associated with the particular KENO calculation being used.

The most important effect on reactivity of the mechanical tolerances is the possible reduction in the water gap between the poison plates. The worst combination of mechanical tolerances are those that result in the maximum reduction in the water gap. For a single can it is found that reactivity does not increase significantly because the increase in reactivity due to the water gap reduction on one side of the can is offset by the decrease in reactivity due to the increased water gap on the opposite side of this can. The analysis, for the effect of mechanical tolerances, however, assumed a worst case of a rack composed of an array of groups of four cans with the minimum water gap between the four cans. The reactivity increase of this configuration is included as a bias in calculating the K_{eff} of the rack. It is included as a bias term since cans can be welded to a common grid during manufacturing which is the likely cause of the water gap reduction.

The final result of the uncertainty analysis is that the criticality design criteria are met when the calculated effective multiplication factor, plus the total uncertainty (TU) and any biases, is less than 0.95.

These methods conform with ANSI N18.2-1973, "Nuclear Safety Criteria for the Design of Stationary Pressurizer Water Reactor Plants," Section 5.7, Fuel Handling System; ANSI N210-1976, "Design Objectives for LWR Spent Fuel Storage Facilities at Nuclear Power Stations," Section 5.1.12; ANSI N16.9-1975, "Validation of Calculational Methods for Nuclear Criticality Safety," NRC Standard Review Plan, Section 9.1.2, "Spent Fuel Storage;" and the NRC guidance, "NRC Position for Review and Acceptance of Spent Fuel Storage and Handling Applications."

Some mechanical tolerances are not included in the analysis because worst case assumptions are used in the nominal case analysis. An example of this is eccentric assembly position. Calculations were performed which show that the most reactive condition is the assembly centered in the can which is assumed in the nominal case. Another example is the reduced width of the poison plates. No bias is included here since the nominal KENO case models the reduced width explicitly.

For normal operation and using the method described above the K_{eff} for the rack is determined in the following manner.

$$K_{eff} = K_{nominal} + B_{mech} + B_{method} + B_{part} + [(KS_{nominal})^2 + (KS_{method})^2]^{1/2}$$

where

$K_{nominal}$ = nominal case KENO K_{eff}.

B_{mech} = K_{eff} bias to account for the fact that mechanical tolerances can result in water gaps between poison plates less than nominal.

B_{method} = method bias determined from benchmark critical comparisons.

B_{part} = bias to account for poison particle self-shielding.

$KS_{nominal}$ = 95/95 uncertainty in the method bias.

Substituting calculated values, the result is K_{eff} = 0.9242

Since K_{eff} is less than 0.95 including uncertainties at a 95/95 probability/confidence level, the acceptance criteria for criticality is met.

7.4 POSTULATED ACCIDENTS

Most accident conditions will not result in an increase in K_{eff} of the rack. Examples are the loss of cooling systems (reactivity decreases with decreasing water density) and dropping a fuel assembly on top of the rack (the rack structure pertinent for criticality is not deformed and the dropped assembly has more than eight inches of water separating it from the active fuel height which precludes interaction). The results of fuel assembly drop accidents are summarized in Table 4-1 (to be provided approximately March, 1981).

However, accidents can be postulated which would increase reactivity. Therefore, for accident conditions, the double contingency principle of ANS N16.1-1975 is applied. This states that one is not required to assume two unlikely, independent, concurrent events to ensure protection against a criticality accident. Thus, for accident conditions, the presence of soluble boron in the storage pool water can be assumed as a realistic initial condition since its absence would be a second unlikely event.

The presence of approximately 2000 ppm boron in the pool water will decrease reactivity by about 30% Δk. In perspective, this is more negative reactivity than is present in the poison plates (25% Δk), so K_{eff} for the rack would be less than 0.95 even if the poison plates were not present. Thus, for postulated accidents, should there be a reactivity increase, K_{eff} would be less than or equal to 0.95 due to the combined effects of the dissolved boron and the poison plates.

The "optimum moderation" accident is not a problem in spent fuel storage racks because possible water densities are too low (≤ 0.01 gm/cm^3) to yield K_{eff} values higher than for full density water and the rack design prevents the preferential reduction of water density between the cells of a rack (e. g., boiling between cells). Further, the presence of poison plates removes the conditions necessary for "optimum moderation" so that K_{eff} continually decreases as moderator density decreases from 1.0 gm/cm^3 to 0.0 gm/cm^3 in poison rack design.

Generally, the acceptance criteria for postulated accident conditions can be $K_{eff} \leq 0.98$ because of the accuracy of the methods used coupled with the low probability of occurrence. For instance, in ANSI N210-1976 the acceptance criteria for the "optimum moderation" condition is $K_{eff} \leq 0.98$. However, for storage pools which contain dissolved boron, the use of the realistic initial conditions ensures that $K_{eff} \ll 0.95$ for postulated accidents. Thus, for simplicity, the acceptance criteria for all conditions will be $K_{eff} \leq 0.95$.

TABLE 7-1

BENCHMARK CRITICAL EXPERIMENTS(4,5,6)

	General Description	Enrichment w/o U235	Reflector	Separating Material	Characterizing Separation (cm)	K_{eff}
1.	UO_2 rod lattice	2.35	water	water	11.92	1.004 ± .004
2.	"	"	"	"	8.39	0.993 ± .004
3.	"	"	"	"	6.39	1.005 ± .004
4.	"	"	"	"	4.46	0.994 ± .004
5.	"	"	"	stainless steel	10.44	1.005 ± .004
6.	"	"	"	"	11.47	0.992 ± .004
7.	"	"	"	"	7.76	0.992 ± .004
8.	"	"	"	"	7.42	1.004 ± .004
9.	"	"	"	boral	6.34	1.005 ± .004
10.	"	"	"	"	9.03	0.992 ± .004
11.	"	"	"	"	5.05	1.001 ± .004
12.	"	4.29	"	water	10.64	0.999 ± .005
13.	"	"	"	stainless steel	9.76	0.999 ± .005
14.	"	"	"	"	8.08	0.998 ± .006
15.	"	"	"	boral	6.72	0.998 ± .005
16.	U metal cylinders	93.2	bare	air	15.43	0.998 ± .003
17.	"	"	paraffin	air	23.84	1.006 ± .005
18.	"	"	bare	air	19.97	1.005 ± .003
19.	"	"	paraffin	air	36.47	1.001 ± .004
20.	"	"	bare	air	13.74	1.005 ± .003
21.	"	"	paraffin	air	23.48	1.005 ± .004
22.	"	"	bare	plexiglas	15.74	1.010 ± .003
23.	"	"	paraffin	plexiglas	24.43	1.006 ± .004
24.	"	"	bare	plexiglas	21.74	0.999 ± .003
25.	"	"	paraffin	plexiglas	27.94	0.994 ± .005
26.	"	"	bare	steel	14.74	1.000 ± .003
27.	"	"	bare	plexiglas steel	16.67	0.006 ± .003

8.0 THERMAL-HYDRAULIC CONSIDERATIONS

8.1 DESCRIPTION OF THE SPENT FUEL POOL COOLING SYSTEM

The Spent Fuel Pool Cooling System (SFPCS) is described in detail in the H. B. Robinson Unit 2 FSAR, Section 9.3. The SFPCS has a design heat removal capacity of 7.96×10^6 Btu/hr. with 100°F component cooling water while maintaining the spent fuel pool at 120°F.

In addition to the equipment described in the FSAR, a standby SFP pump is being installed in parallel with the original pump. Connections have also been made for use of fire protection system water on the shell side of the SFP heat exchanger in the event component cooling water is not available. Normal makeup water to the spent fuel pool is provided from the refueling water storage tank (RWST) by the RWST purification pump.

8.2 HEAT LOADS AND POOL TEMPERATURES FOR PRESENT STORAGE CAPACITY

In the previous expansion of spent fuel pool storage capacity, 36 additional cells were added to the original 240 cells. The license amendment application (dated Sept. 5, 1975) which supported that expansion, identified the two design conditions considered in the analysis of heat loads and pool temperatures. The postulated conditions, which are indicative of the currently existing storage capacity, were normal annual refueling and full core unload, which is a worst case condition.

Case 1 - Refueling Condition for Present Storage Capacity

For this condition, it was assumed the pool already contains 209 assemblies from previous refuelings. Of these 209 assemblies, 53 have cooled for approximately 3.5 years, 104 have cooled for approximately 2.5 years and the remaining 52 have cooled for approximately 1 year. Each of these 209 assemblies have been irradiated through three equilibrium cycles. Fifty-two (52) assemblies (1/3 core) will be moved into the spent fuel pool for the normal refueling. These assemblies will have been irradiated through three equilibrium cycles. The SFP heat load was conservatively calculated for all 261 assemblies to be 9.5×10^6 Btu/hr. at 118 hours after reactor shutdown. The SFPCS is capable of maintaining the pool water temperature at or below 125°F with this heat load.

Case 2 - Equilibrium Cycle, Core Unload Case (maximum condition) for Present Storage Capacity

For this case which represents the maximum heat load condition, it was assumed that the pool already contains 104 assemblies from two previous refueling outages. Of these 104 assemblies, 52 have cooled for approximately two years and 52 have cooled for approximately one year. Each of these 104 assemblies has been irradiated through three equilibrium cycles.

Under the postulated maximum condition, the entire core (157 assemblies) is transferred to the spent fuel pool 154 hours after shutdown. Fifty three of these assemblies will have been irradiated through three equilibrium cycles, 52 through two equilibrium cycles and 52 through one equilibrium cycle. The

SFP heat load at 154 hours after reactor shut down is 24.5 x 10^6 Btu/hr. With this heat load, the SFPCS is capable of maintaining the SFP water at or below 162°F.

The decay heat rates were calculated as a fraction of operating power for all 261 assemblies utilizing the model presented in the October, 1973 draft of ANS 5.1, "Decay Energy Release Rates Following Shutdown of Uranium-Fueled Thermal Reactors" and NRC branch technical position APCSB 9-2. To assure conservatism, these decay heat rates were multiplied by 1.10 to provide heat loads on the SFPCS.

For the refueling case, the 125°F temperature was not considered a significant change from 120°F for which the SFPCS was designed (shown on FSAR Table 9.3-3). For the core unload case, the rate of fuel transfer into the spent fuel pit was to be regulated to keep the SFP temperature at or below 150°F.

8.3 HEAT LOADS AND POOL TEMPERATURES FOR INCREASED STORAGE CAPACITY

To re-evaluate the Robinson Unit 2 fuel pool cooling capabilities for the proposed enlarged storage capacity, the decay heat loads were recalculated. The methdology used for the calculations was that of the NRC Branch Technical Position APCSB 9-2, with 10 percent uncertainty used for cooling times (time after shutdown) greater than 10^7 seconds.
The new pool capacity with the proposed storage capacity increase is 534 fuel assemblies with ten spare storage locations. Each refueling batch (52 assemblies or 1/3 core) is assumed to have had the equivalent of 985 days of full power irradiation at 2300 MWt. The heat load is arrived at by assuming 1/3 core yearly offloads to the spent fuel pool. The total heat load which the SFPCS will be required to remove was calculated for the refueling and core unload design conditions using assumptions identified below.

Case 1 - Refueling Condition for Increased Storage Capacity

For this condition, it was assumed that the pool already contains 482 assemblies (approximately nine annual refueling batches) that have cooled for one to nine years. It is assumed that 52 additional assemblies will be unloaded into the SFP. Each of the 534 assemblies is assumed to have been irradiated at the equivalent of full reactor power of 2300 MWt for 985 days. The total heat load of the 534 assemblies under the above postulated conditions is 12.0 x 10^6 Btu/hr. at 118 hours after reactor shutdown. With this heat load, the SFPCS is capable of maintaining the pool at or below 132°F.

Case 2 - Equilibrium Cycle, Core Unload Case (maximum condition) for Increased Storage Capacity

For this condition, it was assumed that the pool already contains 377 assemblies (approximately seven annual refueling batches) that have cooled for one to seven years. Each of the 377 assemblies is assumed to have been irradiated at 2300 MWt for 985 days(three equilibrium cycles). In addition, it is assumed that a full core of 157 assemblies is to be discharged into the spent fuel pool. Of these 157 assemblies, 53 have been irradiated at 2300 MWt

for 985 days, 52 irradiated at 2300 MWt for 656 days (two equilibrium cycles) and the remaining 52 irradiated at 2300 MWt for 328 days (one equilibrium cycle). The SFP heat load at 154 hours after shutdown, with all 534 assemblies in the pool, is 26.0×10^6 Btu/hr. For this heat load, the SFPCS is capable of maintaining the pool temperature at or below 166°F. In order to keep the SFP water temperature at or below 150°F, the rate of transfer of the assemblies in the core to the spent fuel pool will continue to be regulated. Based on conservative calculations, it was determined that the required delay before achieving a full core offload is approximately 13.2 days (time after shutdown). After this time, the SFPCS is capable of maintaining the pool at or below 150°F.

8.3.1 Conclusions

For each design condition analyzed in 8.2, completely utilizing the proposed expanded spent fuel pool storage capacity, the present SFPCS is capable of maintaining pool water temperatures less than the design maximum temperature of 150°F. The conservative assumptions used in the calculations and data from past operating experiences support the conclusion that actual temperatures that can be expected for each condition will be lower.

8.4 Loss of Spent Fuel Pool Cooling

8.4.1 Alternative Means of Cooling

In the unlikely event that the plant would experience a loss of the SFPCS, there are alternative means of providing cooling for the spent fuel pool. The spent fuel pool pumps are the two active components in the system. In the event of failure of the operating SFP pump, the redundant SFP pump will be started. In the unlikely event component cooling water is interrupted to the SFPCS heat exchanger, fire protection system water can be connected to the shell side of the Spent Fuel Pool Heat Exchanger.

For both the normal refueling case and the full core unload case of the proposed increased capacity, there is sufficient thermal inertia (ie, the time it would take after a loss of cooling for the pool water to reach 180°F) to implement any of the two alternative cooling means. The thermal inertia for the normal refueling case is approximately nine hours. For the regulated full core unload case, the thermal inertia is approximately 3.3 hours.

8.4.2 Complete Loss of Cooling

The complete loss of cooling of the Spent Fuel Pool Water has also been postulated to occur 118 hours after the unit has been shut down, with the current refueling batch (1/3 core) in the Spent Fuel Pool. Calculations using a net pool water volume of 35,167 $ft.^3$ indicate that the time to raise the pool water to boiling from 132°F is 14.5 hours. The makeup water requirement following boiling was calculated to be 24.65 gpm.

A full core regulated offload creates the highest heat load in the spent fuel pool. A complete loss of cooling after a regulated core offload results in a

6.83 hour time interval until pool boiling and a makeup requirement of 41.23 gpm.

No credit was taken in these calculations for evaporative heat losses, heat rejection to the structures, or the heat capacity of the makeup water.

The normal fuel pool makeup water source (refueling water storage tank via the fuel pool purification pump) has a capacity of 100 gpm which is more than adequate to replace the water lost during boiling under either refueling condition.

A radiological analysis has been performed assuming that the pool boils. The consequences are presented in Section 8.6.

8.5 LOCAL FUEL BUNDLE THERMAL HYDRAULICS

A local fuel bundle thermal-hydraulic analysis is performed to determine the maximum fuel clad temperatures which may occur as a result of using the poison spent fuel racks in the H. B. Robinson spent fuel pool.

The criteria used to determine the acceptability of the design from a thermal-hydraulic viewpoint are summarized as follows:

a) The design must allow adequate cooling by natural circulation and by flow provided by the spent fuel pool cooling system. The coolant should remain subcooled at all points within the pool when the cooling system is operational. When the cooling system is postulated to be inoperable, adequate cooling implies that the temperature of the fuel cladding should be sufficiently low that no structural failures would occur and that no safety concerns would exist.

b) For normal operations, the maximum pool temperature shall not exceed 150°F. For conservatism, the temperatures of the storage racks and the stored fuel are evaluated assuming that the temperature of the water at the inlet to the storage cells is 150°F during normal operation.

c) The rack design must not allow trapped air or steam. Direct gamma heating of the storage cell walls and the intercell water must be considered.

Other key assumptions used in the analysis are:

a) The nominal water level is 24 feet above the top of the fuel storage racks.

b) The maximum fuel assembly decay heat output is 5.89×10^4 watts.

c) The maximum temperature of the water at the inlet to the storage cells is 150°F when the cooling system is operational.

d) Under postulated accident conditions, when no pool cooling systems are operational, the maximum temperature at the inlet to the cells is assumed to be equal to the saturation temperature at atmospheric pressure or 212°F.

8.5.1 DESCRIPTION OF ANALYTICAL METHOD AND TYPES OF CALCULATIONS PERFORMED

A natural circulation calculation is employed to determine the thermohydraulic conditions within the spent fuel storage cells. The model used assumes that all downflow occurs in the peripheral gap between the pool walls and the outermost storage cells and all lateral flow occurs in the space between the bottom of the racks and the bottom of the pool. The effect of flow area blockage in the region is conservatively accounted for and a multi-channel formulation is used to determine the variation in axial flow velocities through the various storage cells. The hydraulic resistance of the storage cells and the fuel assemblies is conservatively modeled by applying large uncertainty factors to loss coefficients obtained from various sources. Where necessary, the effect of Reynolds Number on the hydraulic resistance is considered and the variation in momentum and elevation head pressure drops with fluid density is also determined.

The solution is obtained by iteratively solving the conservation equations (mass, momentum and energy) for the natural circulation loops and the flow velocities and fluid temperatures that are obtained are then used to determine the fuel cladding temperatures. An elevation view of a typical model is sketched in Figure 8-1 where the flow paths are indicated by arrows. Note that each cell shown in that sketch actually corresponds to a row of cells that are located at the same distance from the pool walls. This is more clearly shown in a plan view, Figure 8-2. As shown in that sketch, the lateral flow area underneath the storage cells decreases as the distance from the wall increases. This counteracts the decrease in the total lateral flow that occurs because of flow that branches up and flows into the cells. This is significant because the lateral flow velocity affects both the lateral pressure drop underneath the cells and the turning losses that are experienced as the flow branches up into the cells. These effects are considered in the natural circulation analysis.

The most recently discharged or "hottest" fuel assemblies are assumed to be located in various rows during different calculations in order to ensure that they may be placed anywhere within the pool without violating safety limits. In order to simplify the calculations, each row of the model must be composed of storage cells having a uniform decay heat level. This decay heat level may or may not correspond to a specific batch of fuel, but the model is constructed so that the total heat imput is correct. The "hottest" fuel assemblies are all assumed to be placed in a given row of the model in order to ensure that conservatively accurate results are obtained for those assemblies. In fact, the most conservative analysis that can be performed is to assume that all assemblies in the pool (or rows in the model) have the same decay heat rate. This maximizes the total natural circulation flowrate which leads to conservatively large pressure drops in the downcomer and lateral flow regions which reduces the driving pressure drop across the limiting storage locations.

Since the natural circulation velocity strongly affects the temperature rise of the water and the heat transfer coefficient within a storage cell, the hydraulic resistance experienced by the flow is a significant parameter in the evaluation. In order to minimize the resistance, the design of the inlet

region of the racks has been chosen such as to maximize this flow area. Each storage cell has at least three separate flow openings as shown in Figure 8-3. The use of these multiple flow holes virtually eliminates the possibility that all flow into the inlet of a given cell can be blocked by debris or other foreign material that may get into the pool. In order to determine the impact of a partial blockage on the thermal-hydraulic conditions in the cells, an analysis is also performed for various assumed blockages.

The analyses that have been described only address the flow through the storage cells. As noted in the discussion of criteria, it is also required that the flow and temperatures in the axial gap between adjacent storage cells be evaluated. In order to preclude the possibility of stagnant conditions in these gaps, flow relief areas are provided at the location of the grid support structures as shown in Figure 8-4. This flow area also ensures that air or steam cannot be trapped in the rack structure. The thermal hydraulic conditions in the gap region are evaluated by using a parallel path thermal-hydraulic model of the gap and cell under consideration. This analysis considers the gamma heat generation in the cell enclosure, poison material and cell wrapper in addition to the decay heat input. Using the cell flow velocity and driving pressure differential obtained from the previously described pool analyses, the flow velocity in the gap and the axial temperature distributions of the coolant and structure are determined. The radial temperature distributions through the various components are also considered.

8.5.2 RESULTS

Normal Operation

Basis:

a. Cooling System Operational

b. 118 hours after shutdown-Decay Heat = 55.8 BTU/second/assembly

c. Uniform decay heat loading in pool - No credit for lower actual heat input

d. Peak Rod has 60% more heat output than average rod

e. All storage cells filled.

Results of the analysis show that no boiling occurs at any point within the storage racks when the normal cooling system is in operation or whenever pool temperature is maintained within its allowable limits. Water temperatures in the gap between cells are lower than inside the cells, and boiling does not occur in the inter-cell gaps. Although the normal water level is 24 feet above the top of the racks, a level of only 10 feet is required for a saturation temperature of 225°F which is greater than the cell outlet temperature, and no boiling occurs.

Flow-Blockage Analysis

Basis:

a. 118 hours after shutdown

b. Temperature of water at inlet to storage racks = 150°F

Results of the analysis show that should up to 75% flow blockage occur, there would be no boiling in the water channels between the cells or in the cells. Because of the multiple flow openings that are used in the Westinghouse storage racks, it is very improbable that a complete blockage could occur.

Abnormal Condition

Under postulated conditions where all non-Category I spent fuel pool cooling systems become inoperative, there is an alternative method for cooling the spent fuel pool water. Although it is highly unlikely that a complete loss of cooling capability could occur, the racks are analyzed to this condition.

Basis:

a. No pool cooling implies that temperature of water at inlet to spent fuel racks is 212°F which corresponds to the saturation temperature at the pool surface.

b. The nominal water level of 24 feet above the top of the racks is maintained.

c. A conservative fuel loading case is assumed. The pool is completely filled with fuel based on a full core discharge at one month following a normal refueling. Previous refuelings of one-third core from each unit are assumed to have occurred at one year intervals.

d. The assemblies that are evaluated are initially put into the pool at 118 hours after shutdown.

e. The peak rods are assumed to have 60% greater heat output than average rods.

f. All storage cells are filled and all downflow occurs in the peripheral gap.

Results of this analysis show that due to the effects of natural circulation, the fuel cladding temperatures are sufficiently low to preclude structural failures. No boiling in the water channels between the fuel assemblies and within the storage cells occurs.

Since the saturation temperature is approximately 239°F and the maximum cell outlet temperature at 118 hours after shutdown is about 227°F, boiling does not occur in the water channels between fuel assemblies. As decay heat decreases, the cell outlet temperatures also continue to decrease.

8.6 OFFSITE RADIOLOGICAL IMPACT OF SPENT FUEL POOL BOILING

In Section 8.4, the makeup water requirement following pool water boiling was calculated for an assumed loss of the spent fuel pool cooling system. In addition to examining the makeup water requirement in case of a loss of SFPC system, an analysis of the radiological consequences of spent fuel pool water boiling, assuming no water makeup, is performed. The assumptions and calculational parameters used in the offsite whole body and thyroid dose evaluations are presented in Table 8.6-1. The dose results calculated at the exclusion zone boundary and low population zone, are given in Table 8.6-2. These doses are well within the limits of 10 CFR 100 requirements. The following is the derivation of the model used to calculate the activity released from the spent fuel pool.

8.6.1 Pool Activity Release Model

It is assumed that any significant activity releases from the pool to the Fuel Handling Building atmosphere will start with pool water boiling. Consequently, activity released from the newly discharged fuel assemblies will build up in the pool water until the start of boiling. The models presented reflect the two phases of activity buildup in and releases from the spent fuel pool water.

During the heat-up period, neglecting loss of I-131 activity from the pool water due to evaporation, the rate of change in pool activity is given by:

$$\frac{dA(t')}{dt'} = Lse^{-\lambda t'} - \lambda A(t) \qquad (1)$$

The activity in the pool at any time during the heat-up period is obtained by integrating Equation 1 from t' = o to t' = t.

$$A(t) = LSte^{-\lambda t} \qquad (2)$$

During boiling, the rate of change of activity in the pool is given by:

$$\frac{dA(t')}{dt'} = LSe^{-\lambda t'} - \left(\frac{B}{M} + \lambda\right) A(t') \qquad (3)$$

The integration of Equation 3 from $t' = t_o$ to $t' = t$ gives the pool activity at any time during the boiling phase

$$A(t) = LSe^{-\lambda t} \left[\frac{1 - e^{-\frac{B}{M}(t - t_o)}}{\frac{B}{M}} \right] + A(t_o)e^{-\left(\lambda + \frac{B}{M}\right)\left(t - t_o\right)} \qquad (4)$$

Substituting $t - t_o = \Delta t$,

$$A(t) = LSe^{-\lambda t}\left[\frac{1 - e^{-\frac{B}{M}\Delta t}}{\frac{B}{M}}\right] + A(t_o)e^{-\left(\lambda + \frac{B}{M}\right)\Delta t} \qquad (5)$$

The activity released to the pool atmosphere during a time interval Δt due to boiling (with DF=1) is given by the equation:

$$Q = \int_{t_o}^{t} \frac{B}{M} A(t')\, dt' \qquad (6)$$

Using Equation 4 for $A(t')$ in Equation 6, integrating Equation 6 and substituting Δt for $t - t_o$,

$$Q = LSe^{-\lambda t_o}\left[\frac{(1 - e^{-\lambda\Delta t})}{\lambda} - \frac{1 - e^{-\left(\lambda + \frac{B}{M}\right)\Delta t}}{\left(\lambda + \frac{B}{M}\right)}\right] + \frac{B}{M} A(t_o)\left[\frac{1 - e^{-\left(\lambda + \frac{B}{M}\right)\Delta t}}{\left(\lambda + \frac{B}{M}\right)}\right] \qquad (7)$$

<u>Definition of Terms</u>

t', t	= Time variables measured from initiation of pool heat-up, hr
$t - t_o$	= Δt = a time interval, hr
$A(t)$, $A(t')$, $A(t_o)$	= I=131 activity in the pool water at times t, t', and t_o, respectively, Ci
λ	= I-131 radiological decay constant, hr^{-1}
L	= Spiking release rate coefficient for I-131, hr^{-1}
S	= Initial I-131 inventory in the newly discharged leaking fuel rods in the pool (at t=o), Ci
M	= Mass of pool water, lb
B	= Rate of boiling of the pool water, lb/hr
$\lambda + L$	= Total loss rate of I-131 from the leaking rods $\approx \lambda$ (slightly conservative), hr^{-1}

$\lambda + \frac{B}{M}$	= Total loss rate of I-131 from the pool water due to decay and boiling (with DF = 1), hr^{-1}
Q	= Integrated activity released to the pool atmosphere during a time interval, Ci/hr.
t_o	= Initial time of a time interval measured from initiation of pool heat up, hr.

TABLE 8.6-1

Assumptions and Calculational Parameters
Used in the Radiological Offsite Dose Consequence
Evaluation of a Loss of Spent Fuel Pool Cooling

A. Assumptions

1. Two Cases are analyzed

   a) discharge of 1/3 core
   b) discharge of full core

2. All failed-fuel rods in full core are present in the 1/3 core discharged.

3. Failure of the SFPC system occurs at the completion of fuel transfer.

4. The contribution to the pool activity from old fuel is negligible.

5. The contribution to the pool activity from mixing with the reactor water during refueling is negligible.

6. The activity release due to evaporation prior to boiling is negligible.

7. The fuel pool water decontamination factor is unity.

8. The spent fuel pool cleanup system is isolated at the initiation of heat-up.

9. The releases to the environment bypass filtration systems.

B. Calculational Parameters

1.	I-131 core equilibrium inventory:	5.6×10^7 Ci
2.	Time period after reactor shutdown before fuel movement begins:	100 hr
3.	Time required to transfer fuel:	
	a) 1/3 core	18 hr
	b) full core	52 hr
4.	Wetted Fuel pool volume	35,167 ft^3

TABLE 8.6-1 (Cont'd)

Assumptions and Calculational Parameters
Used in the Radiological Offsite Dose Consequence
Evaluation of a Loss of Spent Fuel Pool Cooling

5.	Time for pool water to start boiling:	
	a) 1/3 core	14.5 hr
	b) full core	6.8 hr
6.	Pool water boil-off rate:	
	a) 1/3 core	12,329 lb/hr
	b) full core	20,637 lb/hr
7.	Failed fuel percent	1
8.	I-131 release rate coefficient	4.6×10^{-10} sec^{-1}
9.	Spiking factor	100
10.	Ground level atmospheric dispersion factors, sec/m^3	
	0-2 hr at Exclusion Zone Boundary	6.67×10^{-4}
	0-8 hr at Low Population Zone	7.86×10^{-5}
	8-24 hr at Low Population Zone	4.7×10^{-5}
	1-4 days at Low Population Zone	1.6×10^{-5}

TABLE 8.6-2

Offsite Doses Resulting From a Loss
Of Spent Fuel Pool Cooling

A. 1/3 Core Case

	Thyroid	Whole Body
2 hr-doses at EZB, Rem	3.4	5.8(-4)*
4-day doses at LPZ, Rem	9.4	2.4(-3)

B. Full Core Case

2 hr-doses at EZB, Rem	2.6	4.4(-4)
4-day doses at LPZ, Rem	10.8	2.8(-3)

* Number in parentheses indicates power of ten.

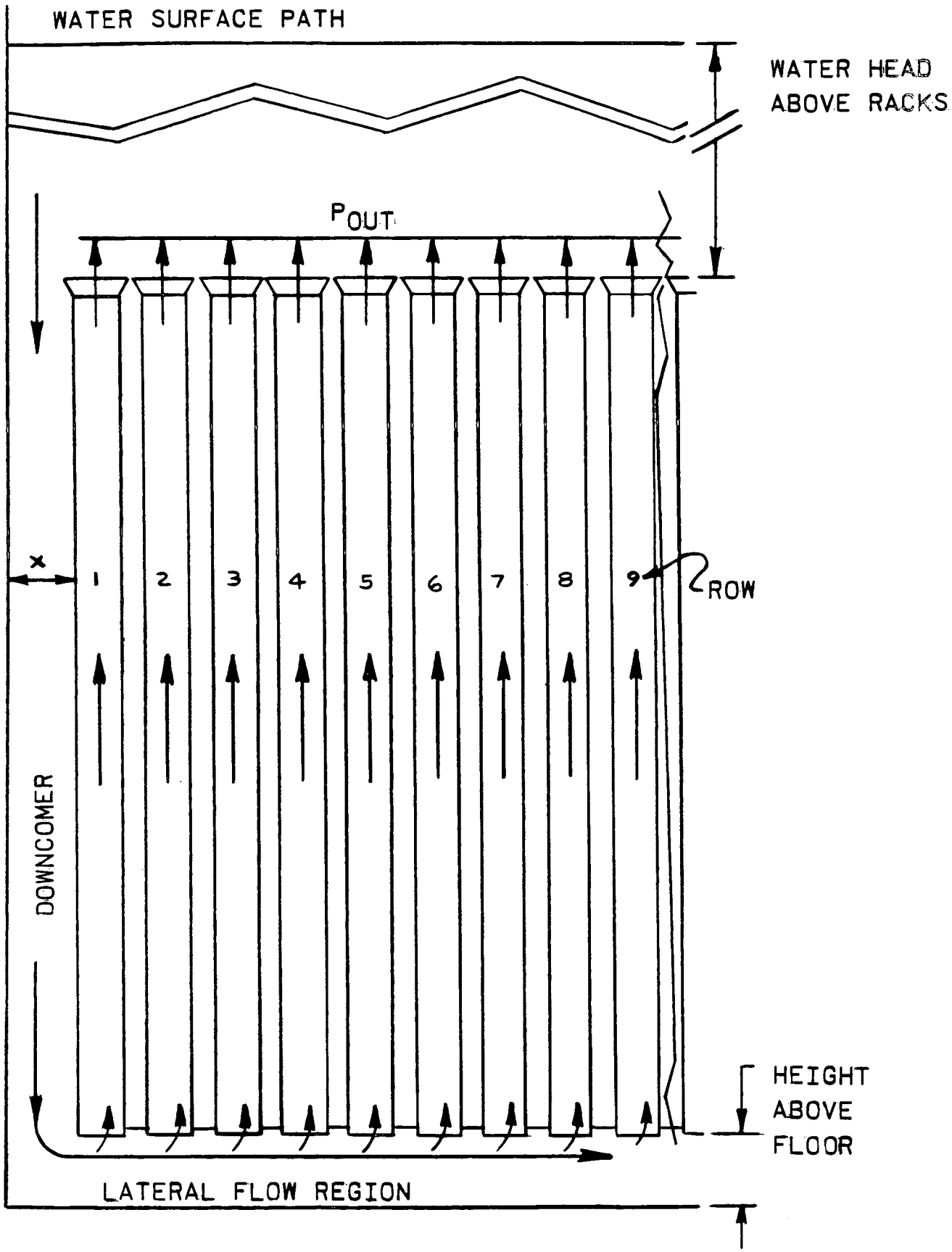

H. B. ROBINSON STEAM ELECTRIC PLANT, UNIT NO. 2 Carolina Power & Light Company SPENT FUEL POOL STORAGE EXPANSION	SPENT FUEL POOL NATURAL CIRCULATION MODEL (Elevation View)	FIGURE 8-1

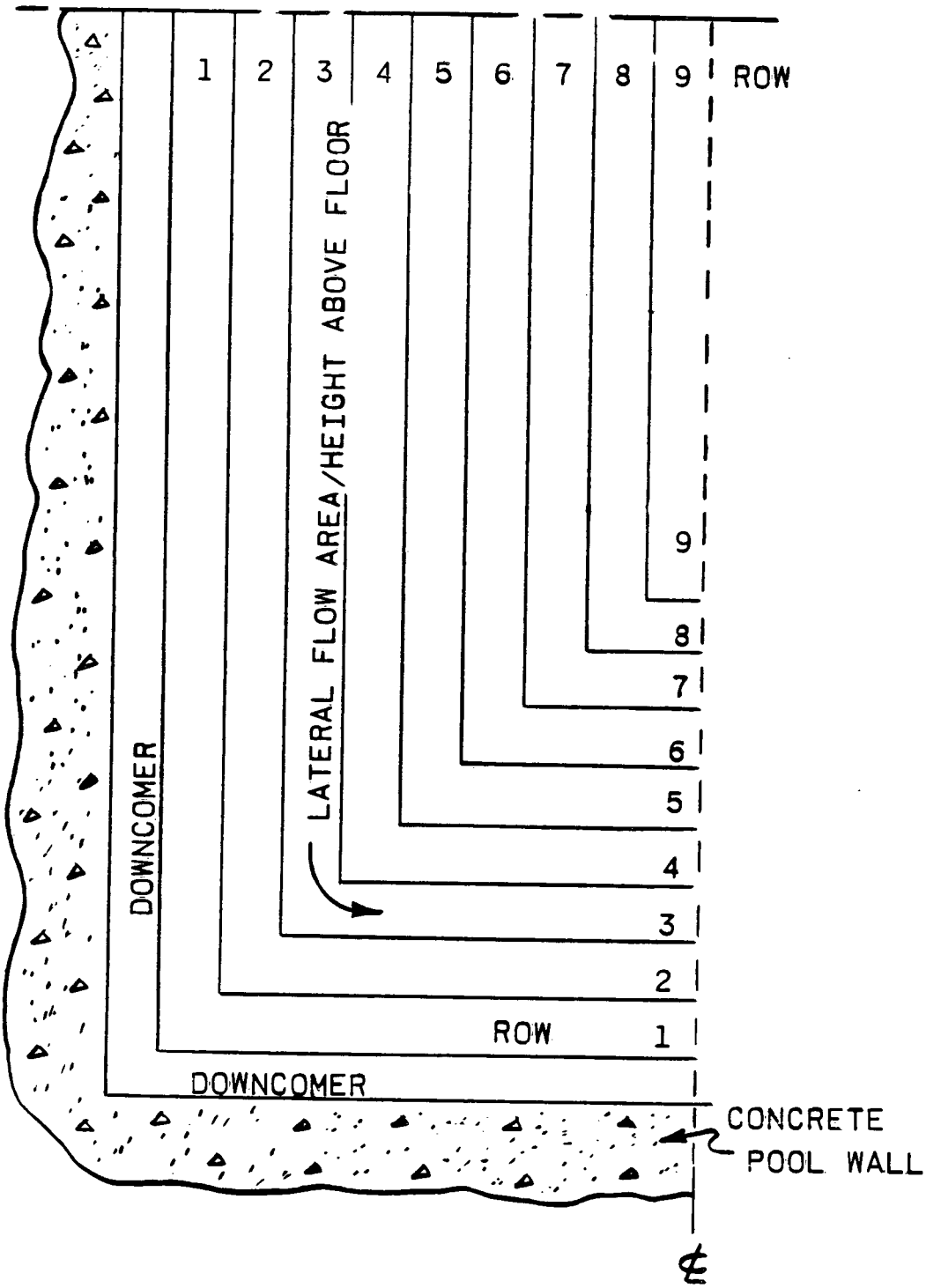

H. B. ROBINSON STEAM ELECTRIC PLANT, UNIT NO. 2 Carolina Power & Light Company SPENT FUEL POOL STORAGE EXPANSION	SPENT FUEL POOL NATURAL CIRCULATION MODEL (Plan View)	FIGURE 8-2

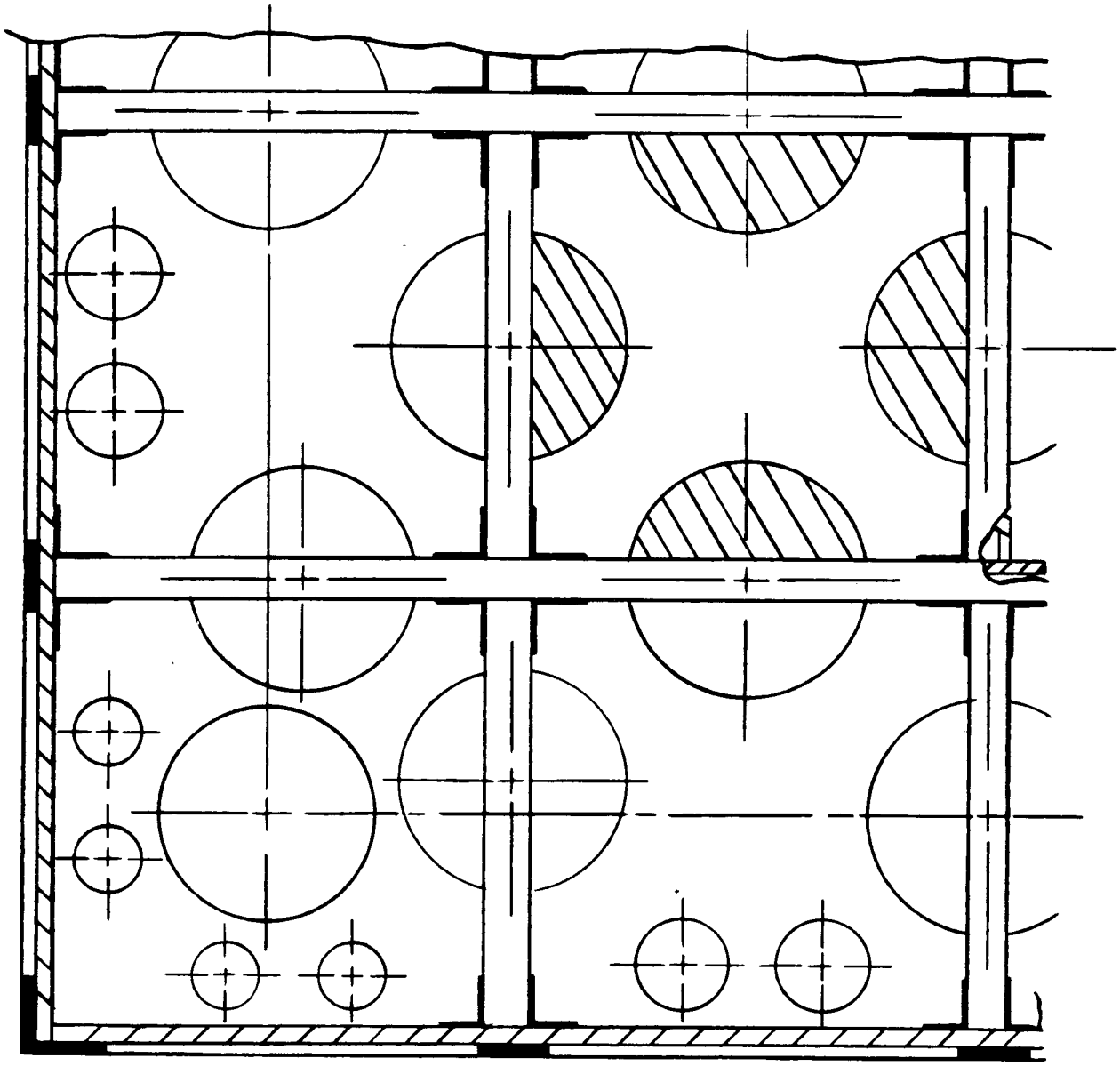

H. B. ROBINSON STEAM ELECTRIC PLANT, UNIT NO. 2 Carolina Power & Light Company SPENT FUEL POOL STORAGE EXPANSION	SPENT FUEL RACK INLET FLOW AREAS	FIGURE 8-3

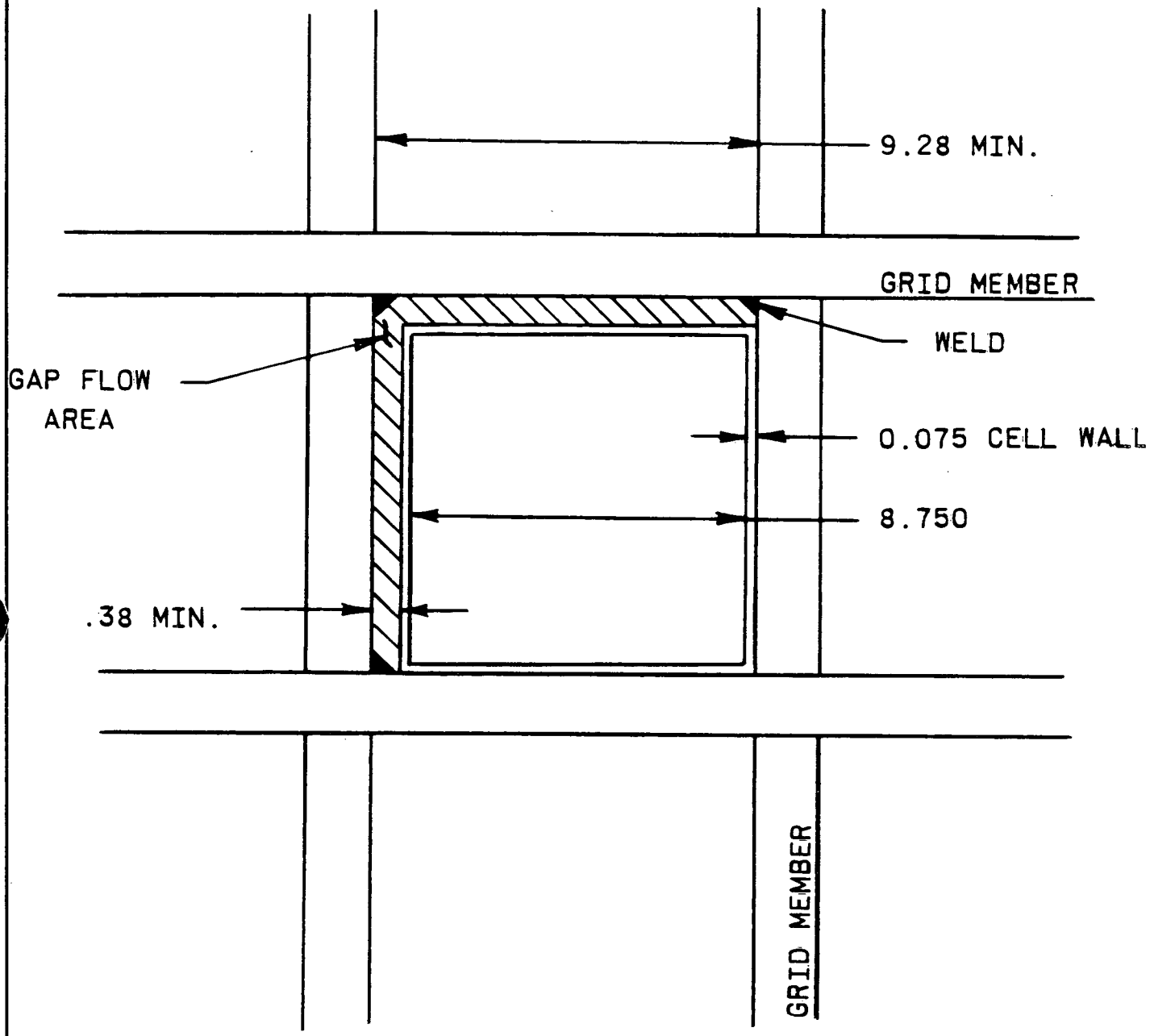

GAP FLOW AREA AT SUPPORT A = 6.82 IN.^{2}

H. B. ROBINSON STEAM ELECTRIC PLANT, UNIT NO. 2 Carolina Power & Light Company SPENT FUEL POOL STORAGE EXPANSION	INTERCELL FLOW AREA	FIGURE 8-4

9.0 COST BENEFIT ASSESSMENT

9.1 NEED FOR INCREASED CAPACITY

The spent fuel storage facility at H. B. Robinson was originally designed for temporary storage of spent fuel until the fuel had cooled enough for transportation to a reprocessing facility. The absence of activity in the construction of new fuel reprocessing facilities, and the cessation of operation of existing facilities created the need for increased storage capability to permit continued plant operation. In recognition of this need, 36 fuel assembly storage spaces were added to the H. B. Robinson pool in 1976 and a total of 304 spaces for PWR fuel were provided at the Brunswick Plant (BWR). The indefinite deferral of reprocessing in the U.S., the uncertain availability of away from reactor storage, and the continued slippage in the scheduled availability of a geological disposal facility have made it necessary once again to seek interim relief by a further expansion of the H. B. Robinson spent fuel pool capacity.

The anticipated fuel discharge schedule for H. B. Robinson Unit No. 2 is described in Table 9.1-1. A review of this schedule indicates that with the present system storage capacity, full core discharge capability will be lost after the 1981 refueling and that all storage capacity will be expended by 1983, forcing the unit to shut down in 1984.

Expansion of the storage capacity by the use of Westinghouse high density poisoned storage racks to a total of 544 spaces (534 spaces for fuel and 10 unused spares) will produce enough capacity to provide for a full core reserve until 1986 and will permit continued operation through 1989.

9.2 ALTERNATIVES TO INCREASED CAPACITY

Several alternatives to the expansion of the storage capacities of the H. B. Robinson Unit 2 spent fuel pool to alleviate the spent fuel storage were considered.

In summary, the alternatives considered were:

a) Shipment to a fuel reprocessing facility.

b) Shipment to an independent spent fuel storage facility.

c) Shipment to another reactor site.

d) Shipment to a geological disposal facility

e) Shutting down the reactor.

a) Shipment to a Fuel Reprocessing Facility

There are currently no commercial spent fuel reprocessing facilities in operation in the United States. In April 1977, the President of the United States announced a spent nuclear fuel policy which included the indefinite deferral of commercial reprocessing in the United States nuclear power

program. Reprocessing of spent fuel is not a viable alternative to the expansion of the Robinson spent fuel pool. Storage of the Robinson spent fuel at the existing (although not operating) reprocessing facilities is also not a viable alternative to the expansion of the unit spent fuel pool since the facility owners are not offering to provide comparable storage capacity.

b) Shipment to a Storage Facility

Spent fuel storage at a private or government operated independent spent fuel storage facility is not currently available. The alternative of constructing a private facility to serve the CP&L system would not be economically viable. The Department of Energy has estimated that construction of a 5000 MTU independent spent fuel storage facility would cost approximately $200,000,000 (DOE/SR-SF-2002, Rev. 1, "Spent LWR Fuel Storage Costs - Reracking, AR Basins and AFR Basins" January, 1980) or about $40/kg. A smaller facility designed to serve our needs would be expected to have a higher cost per kg. These costs are larger than the estimated cost of the increased storage capacity which will be obtained by expanding the present reactor pools (approximately $29.55/kg).

c) Shipment to Another Reactor Site

The only available reactor sites which could be used as alternative spent fuel storage facilities within the CP&L system are the Brunswick Plant and the Shearon Harris Nuclear Power Plant. The Brunswick units have the same fuel storage problems as Robinson with only a slight variation in crucial dates. The Harris Plant has an expected commercial inservice date of March, 1985, and will thus be unavailable in time to prevent the loss of full core reserve or possibly the forced shutdown of the unit.

d) Shipment to a Geological Disposal Facility

There are no disposal facilities currently available for high level radioactive waste or spent fuel. Under the national radioactive waste management program outlined by the President, the site for the first facility would not be selected until around 1985 and it would not be operational until around 1995.

e) Plant Shutdown

Shutdown of the Robinson Plant would require the purchase of power from substitute sources and/or production from less economical sources within the system. The figures shown in Table 9.2-1 are the increased production costs (actual year dollars) to the CP&L electric system for replacement power if Robinson Unit 2 is shut down after the 1984 refueling. These figures do not include any capital (fixed) cost dollars that still would have to be amortized whether the plant is operating or not. Also not included is the cost of maintaining the plant in a shutdown condition and maintaining site security.

9.3 CAPITAL COSTS

Costs incurred by expanding the spent fuel storage capabilities at the Robinson Plant are summarized on Table (9.3-1). These costs represent the

current prediction of the total project costs, including the installation of the high density spent fuel storage racks and disposal costs of the presently installed racks. Indirect capital costs other than those specified have not been considered.

The overall scope of the project includes the following:

a) Design feasibility study.

b) Design amendment preparation and submittal.

c) Engineering studies to support license amendment including nuclear analysis, seismic analysis, and thermal-hydraulic analysis.

d) Installation preparation, including removal and disposal of original racks, hold-down clips, seismic restraints, etc.

e) Installation of new racks.

f) Development and implementation of poison verification procedures.

9.4 RESOURCE COMMITMENT

The relatively small quantities of material resources that would be committed to the proposed modification would not significantly foreclose the alternatives available with respect to any other licensing actions designed to ameliorate a possible shortage of spent fuel storage capacity. The material resources that would be consumed by the proposed modification are listed below.

Material	Robinson Modification Quantity (lb)
304 Stainless Steel	8.8×10^4
Boraflex	7.0×10^3
Silicone Rubber	4.2×10^3
Boron Carbide	2.8×10^3

9.5 ENVIRONMENTAL IMPACT OF EXPANDED SPENT FUEL STORAGE

An analysis of the spent fuel pool heat loads comparing the loads possible under the existing storage capacity to those under the proposed capacity has been performed. Since, under the proposed condition of increased capacity, the full core discharge will be regulated over time to ensure the pool temperature does not exceed 150°F, just as it is under the current capacity, the full core discharge case does not result in the discharge of higher temperature effluents to the environment.

For the normal 1/3 core refueling case, there will be an increase of 2°F in the component cooling water which removes heat from the spent fuel pool heat

exchanger. Component cooling water leaving the spent fuel pool heat exchanger will be at a maximum of 110°F rather than 108°F. This temperature results from discharge of the 1/3 core refueling batch which fills the storage pool to capacity and therefore conservatively represents all other refueling cases where less than the pool storage capacity is reached.

Considering the fluctuations in temperature of all other equipment being cooled by the component cooling water and the thermal dilution experienced when mixing with these other streams, the increase in component cooling water temperature due to the increased fuel storage capacity is insignificant.

Furthermore, the added heat in the component cooling water is again moderated as it is transferred to the service water in the component cooling water heat exchanger before reaching the environment.

The higher pool temperature due to the 1/3 core refueling case will cause an average increase in the evaporation rate from the pool surface of 150 lb/hr at the highest pool temperature (110°F). The 8,000 cfm fuel pool area ventilation system will handle the increase with a negligible effect on the performance of the system and on the environmental conditions within the fuel handling building.

The increase in exhaust air temperature based on air at standard conditions will be 3.5°F when the pool temperature is at its maximum refueling case temperature of 110°F. This will have a negligible effect on the environment.

Since the pool temperature begins declining soon after the refueling batch is placed in the pool the use of the maximum 110°F temperature results in conditions that will prevail for only a short time and provides a conservative estimate of the longer term effects of increasing the fuel pool capacity.

TABLE 9.1-1

H. B. Robinson Unit No. 2
Anticipated Fuel Discharge Schedule

Pool Limit: Current 276 - Proposed 534

Date	Projected Fuel in Storage**
January 1, 1980	106
September 1, 1980	158
Spring 1981	113*
November 1, 1981	165
November 1, 1982	217
November 1, 1983	269
November 1, 1984	321
November 1, 1985	373
November 1, 1986	425
November 1, 1987	477
November 1, 1988	529

* 45 assemblies shipped to Brunswick

** No full core reserve capacity included

TABLE 9.2-1

H. B. Robinson Replacement Power Costs*
(in actual year dollars)

Year	1 Cost (if Brunswick remains available)	2 Cost (Brunswick also lost)
1984x	+	+
1985†	118,283,700	118,283,700
1986°	128,043,100	206,340,100
1987	148,757,000	519,763,000
1988	130,633,000	695,433,000
1989	193,876,000	900,318,000
1990	145,446,000	692,976,000

+ No additional cost in 1984 - lost generation balanced by no outage expenses.

x Robinson shut down November 1, 1984.

† Case 2, Brunswick 1 shut down August 1, 1986.

° Case 2, Brunswick 2 shut down October 1, 1987.

* Estimate based on CP&L construction schedule, projected load forecast and fuel cost data as of mid 1980. Case 2 data is uncertain since this case shows some negative reserve margins and replacement power availability is uncertain.

TABLE 9.3-1

SPENT FUEL POOL EXPANSION COST ESTIMATE

Racks and Equipment	$1,442K
Installation	789K
Engr. Supervision & OH	377K
Contingency	652K
Allowance for Funds During Construction	167K
Total	$3,427K

10.0 RADIOLOGICAL EVALUATION

10.1 SPENT RESIN WASTE

Solid radioactive wastes that result from the operation of the Spent Fuel Pool (SFP) purification system are collected at two points within the system; the SFP Demineralizer and the SFP Filter. Normally, the SFP Demineralizer and Filter are operated whenever the SFP Cooling System is operating.

The SFP Demineralizer is designed for 100 gpm flow and contains 30 cubic feet of bead type ion exchange resin is provided. The demineralizer is sized to process 5% of the SFP Cooling System flow rate.

In the SFP Demineralizer, a resin charge remains in service until it no longer provides the design decontamination factor as determined by comparing radioactivity values at the inlet and outlet of the demineralizer. The 30 cubic foot resin charge is then flushed to the plant Spent Resin Tank. Resins from the Spent Resin Tank are shipped offsite in a drum with a liner with no solidification material being added. Based on current operating experience it is estimated that three or four ion exchange resin bed change outs per year, producing a maximum of 120 cubic feet of waste, will be necessary.

The SFP Filter contains 18 fixed element type, 5 micron rating, replaceable filter cartridges designed for 100 gpm. The SFP Filter is operated until either the filter reaches its design pressure drop or until radiation measurements indicate that the maximum value for activity has accumulated in the filter. Activity is normally the controlling criterion for filter cartridge replacement.

Waste filter cartridges are packed in drums with cement added as a solidifying agent. Each filter cartridge replacement produces approximately 2.5 cubic feet of solidified waste. Eight filter cartridge replacements per year result in an annual production of 20 cubic feet of solidified waste.

Since the great majority of the contamination collected by the purification system derives either from freshly unloaded fuel or the intermixing of spent fuel pool fluid with primary coolant during the refueling procedure, increasing the storage capacity has no significant effect on the quantity of waste collected.

Thus, no significant increase in the annual quantity of radioactive waste being collected by the Spent Fuel Pool purification system is expected as a result of increasing the storage capacity of the SFP. The effective change in increasing the storage capacity of the spent fuel pool is the retention of older fuel elements in the pool beyond the time when they would have otherwise been shipped offsite for disposal or reprocessing.

10.2 NOBLE GASES

Krypton-85 is released to the pool water and subsequently to the refueling floor atmosphere from the leaking fuel assemblies. For normal operating conditions, most of the krypton comes from the most recently discharged batch

of fuel. After the most recent batch has cooled in the pool for 12 months, the pressure buildup in a fuel pin which causes the release of krypton has become very small. Thus, the increase in krypton-85 activity attributed to the increase in spent fuel pool storage capacity will be small compared to the total quantity of all noble gases released from the pool.

10.3 GAMMA ISOTOPIC ANALYSIS FOR POOL WATER

H. B. Robinson has undergone seven refuelings. Typical radioactive isotope concentrations are presented in Table 10.3-1 for various dates.

10.4 DOSE LEVELS OVER THE POOL

Dose surveys are periodically taken at the Robinson pool. The results of a recent survey are shown on Table 10.3-1. The low level of these readings indicates that there has been no significant crud buildup around the sides of the pool and that radiation levels are as low as reasonably achievable. There has been considerable movement of spent fuel assemblies within the Robinson pool in the past as fuel was shipped to the Brunswick plant for storage and the fuel movement necessary to accomplish this capacity enlargement is substantially less. The lack of radiological impact from prior fuel movement confirms that no significant impacts from this effort will occur.

10.5 AIRBORNE RADIOACTIVE NUCLIDES

Air samples taken from the refueling floor atmosphere during and after each refueling, show only very low levels of airborne activity. Storage of additional fuel is not expected to increase the airborne activity on the refueling floor since the major contribution of airborne activity is attributed to the most recent batch of spent fuel that is placed in the pool.

10.6 RADIATION PROTECTION PROGRAM

The Radiation Protection Program is described in detail in the plant operating manual. This program will be adhered to during the removal of the old racks and installation of the new racks.

10.7 DISPOSAL OF PRESENT SPENT FUEL RACKS

There are at present four, 3 cell x 3 cell stainless steel racks with 15-1/2 inches centerline-to-centerline spacing and four, 4 cell x 4 cell stainless steel racks with 21 inches centerline-to-centerline spacing to be removed from the spent fuel pool. The racks will be decontaminated and disposed of using one of the following methods which are being investigated:

1. Cleaned of surface contamination by spray washing and/or hydrolasing, packaging as appropriate for the residual dose levels and shipping to the off-site burial site at Barnwell, SC.

2. Same as Number 1 above except that the volume of the racks will be reduced by appropriate cutting and/or crushing operation prior to shipment.

3. Cleaned as in Number 1, cut to appropriate sizes to fit in special electropolishing vats, electropolished to remove all radioactive material (which will be reduced and shipped to off-site burial) and sold as scrap.

The study of these methods will take into consideration personnel radiation exposures, technology, and economics of the different methods. A reasonable effort will be made to limit personnel exposure to as low as reasonably achievable during this work.

10.8 IMPACT ON RADIOACTIVE EFFLUENTS

All potential normal plant releases of liquid radioactive effluents are from the radioactive waste disposal system. Contribution of liquids to this system from the Fuel Handling Building are made from the Fuel Handling Building drains and from flushing spent resin from the Spent Fuel Pool Demineralizer to the Spent Resin Storage Tank.

As discussed in Section 10.0, the increase in Spent Fuel Pool storage capacity effectively means that older fuel will be allowed to remain in the pool longer than originally planned. Since the source of the great majority of contamination in the pool is from freshly unloaded fuel and the mixing of pool water with the reactor coolant during refueling, the increase in storage capacity will not significantly add to the activity in the clean up system and, therefore, will not increase the liquid radioactive effluents from the plant.

For the same reason, gaseous effluents, originating from the spent fuel pool as a result of evaporation and partitioning, will not be increased because of the increased storage capability.

TABLE 10.3-1

ROBINSON SPENT FUEL POOL INFORMATION

Survey Date

9/ 6/80	-	spent fuel pit survey 1 foot up from surface				2 to 5 mr/hr
8/29/80	-	cobalt 60 particulate 8.54 E-11				
8/29/80	-	iodine 131 8.03 E-12				
8/29/80	-	MDA of gases	1) Argon 41	-	5.11 E-8	all measurements
			2) Krypton 85	-	1.31 E-5	in microcuries per
			3) Xenon 133	-	1.21 E-7	cc.
			4) Krypton 88	-	9.51 E-8	
			5) Xenon 135	-	4.99 E-8	

GAMMA SCANS ON ISOTOPES IN THE SPENT FUEL POOL WATER:

Isotope	7/31/78	7/24/79	1/14/80	6/23/80
Cesium 137	5.74 E-4	1.56 E-4	2.37 E-4	5.4 E-4
Cesium 134	1.89 E-4	Nondetectable	3.69 E-5	9.03 E-5
Antimony 125	6.33 E-5	Nondetectable	Nondetectable	Nondetectable
Antimony 124	Nondetectable	6.97 E-5	Nondetectable	Nondetectable
Niobium 95	Nondetectable	Nondetectable	1.48 E-5	Nondetectable
Zinc 65	Nondetectable	9.71 E-5	Nondetectable	Nondetectable
Cobalt 60	3.59 E-3	3.35 E-3	6.00 E-4	8.36 E-4
Cobalt 58	2.75 E-3	9.06 E-3	1.86 E-4	5.50 E-5
Cobalt 57	1.82 E-5	2.89 E-5	Nondetectable	Nondetectable
Manganese 54	3.52 E-5	3.55 E-3	2.30 E-5	1.29 E-5

11.0 ACCIDENT EVALUATION

The spent fuel cask handling crane originally provided when the plant went operational was replaced in 1975 (1, 2, 3). Redundant features have been incorporated into the existing crane and its cask lifting rig. The addition of these features renders the possibility of a cask drop accident very remote. The addition of more spent fuel assemblies to the pool under the proposed storage expansion request does not affect the acceptability of the cask handling system.

12.0 CONCLUSIONS

The information contained in this document to support the proposed modification satisfies the necessary applicable regulatory requirements to allow NRC approval for Carolina Power & Light Company to rerack the H. B. Robinson Unit 2 spent fuel pool and demonstrates that the proposed modification can be safely accomplished. This proposed modification is the most cost effective and desirable alternative, and is in the best interest of the public. The proposed modification does not significantly change or impact any previous determinations which are documented in the H. B. Robinson 2 Safety Evaluation Reports and Final Environmental Statements, and therefore precludes the need for preparation of an environmental impact statement.

13.0 REFERENCES

REFERENCES TO SECTION 4.0

1. WECAN - "Documentation of Selected Westinghouse Structural Analyses Computer Codes", WCAP-8252.

2. WECAN - "Benchmark Problem Solution Employed for Verification of the WECAN Computer Program", WCAP-8929.

3. MRI/STARDYNE - Control Data Corporation CYBERNET and Data Services/INTERNATIONAL. Developed by Mechanics Research, Inc., Los Angelos, California, dated September 26, 1979.

REFERENCES TO SECTION 5.0

1. J. S. Anderson, "Boraflex Neutron Shielding Material--Product Performance Data," Brand Industries, Inc. Report 748-30-1, (August 1979).

2. J. S. Anderson, "Irradiation Study of Boraflex Neutron Shielding Materials," Brand Industries, Inc. Report 748-10-1, (July 1979).

3. J. S. Anderson, "A Final Report on the Effects of High Temperature Borated Water Exposure on BISCO Boraflex Neutron Absorbing Materials," Brand Industries, Inc. Report 748-21-1, (August 1978).

REFERENCES TO SECTION 7.0

1. W. E. Ford, III, et al, "A 218-Group Neutron Cross-Section Library in the AMPX Master Interface Format for Criticality Safety Studies," ORNL/CSD/TM-4 (July 1976).

2. N. M. Greene, et al, "AMPX: A Modular Code System for Generating Coupled Multigroup Neutron-Gamma Libraries from ENDF/B," ORNL/TM-3706 (March 1976).

3. L. M. Petrie and N. F. Cross, "KENO IV--An Improved Monte Carlo Criticality Program," ORNL-4938 (November 1975).

4. S. R. Bierman, et al, "Critical Separation Between Subcritical Clusters of 2.35 wt % U^{235} Enriched UO_2 Rods in Water with Fixed Neutron Poisons," Battelle Pacific Northwest Laboratories PNL-2438 (October 1977).

5. S. R. Bierman, et al, "Critical Separation Between Subcritical Clusters of 4.29 wt % U^{235} Rods in Water with Fixed Neutron Poisons," Battelle Pacific Northwest Laboratories PNL-2615 (March 1978).

6. J. T. Thomas, "Critical Three-Dimensional Arrays of U (93.2)--Metal Cylinders," Nuclear Science and Engineering, Volume 52, pages 350-359 (1973).

REFERENCES TO SECTION 11.0

1. Carolina Power & Light Company letter from E. E. Utley to Karl R. Goller, May 14, 1974, Serial No. NG-74-608. Docket No. 50-261.

2. Carolina Power & Light Company letter from E. E. Utley to Karl R. Goller, October 17, 1974, Serial No. NG-74-1246. Docket No. 50-261.

3. Carolina Power & Light Company letter from E. E. Utley to Karl R. Goller, April 15, 1975, Serial No. NG-75-534. Docket No. 50-261.