L44 140625 002

Tennessee Valley Authority, 1101 Market Street, Chattanooga, Tennessee 37402

CNL-14-072

June 25, 2014

10 CFR 2.202

ATTN: Document Control Desk
U.S. Nuclear Regulatory Commission
Washington, DC 20555-0001

Watts Bar Nuclear Plant, Unit 1
Facility Operating License No. NPF-90
NRC Docket No. 50-390

Watts Bar Nuclear Plant, Unit 2
Construction Permit No. CPPR-92
NRC Docket No. 50-391

Subject: **Follow-up Response to NRC Request for Additional Information Related to Overall Integrated Plan in Response to the Commission Order Modifying Licenses with Regard to Requirements for Reliable Spent Fuel Pool Instrumentation (Order Number EA-12-051) (TAC Nos. MF0951 and MF1178)**

References:

1. Letter from TVA to NRC, "Response to NRC Request for Additional Information Related to Overall Integrated Plan in Response to the Commission Order Modifying Licenses with Regard to Requirements for Reliable Spent Fuel Pool Instrumentation (Order Number EA-12-051) (TAC Nos. MF0951 and MF1178)," dated November 22, 2013

2. Follow-up Response to NRC Request for Additional Information Related to Overall Integrated Plan in Response to the Commission Order Modifying Licenses with Regard to Requirements for Reliable Spent Fuel Pool Instrumentation (Order Number EA-12-051) (TAC Nos. MF0951 and MF1178), dated January 10, 2014

On November 22, 2013, the Tennessee Valley Authority (TVA) submitted a response to the Nuclear Regulatory Commission (NRC) regarding a request for additional information (RAI) related to the Watts Bar Nuclear Plant (WBN) Overall Integrated Plan for reliable spent fuel pool instrumentation (Reference 1). TVA noted in Enclosure 2 of Reference 1 that some information would be provided by January 10, 2014, as vendor documentation and calculations were in progress. A teleconference was also held on December 19, 2013, between TVA and the NRC regarding additional questions and clarifications to the referenced letter.

Reference 2 provided a response to regulatory commitment 1 of Enclosure 2 to the Reference 1 letter. Reference 2 also provided a response to questions from the December 19, 2013, teleconference related to RAI questions 1 and 18c.

Regulatory commitment 1a, b, c, and d stated TVA would provide results and notify the NRC when final vendor testing and qualification documentation supporting responses to RAI questions 5, 6, 12, and 15 would be available for review. This documentation was scheduled to be completed by December 13, 2013; however, due to emissions testing issues, the documentation was not scheduled to be completed until March 10, 2014. The enclosure to the Reference 2 letter revised regulatory commitment 1 to provide the results and notify the NRC that final vendor testing and qualification documentation supporting responses to RAI questions 5, 6, 12, and 15 would not be available for review until March 14, 2014 date.

On February 4 and 5, 2014, NRC conducted an audit of available vendor testing and qualification documentation. A follow-up audit was conducted on April 2, 2014, to review the final vendor testing and qualification documentation. With the completion of this audit, regulatory commitments 1a, b, c, and d have been completed.

The purpose of this letter is to provide the revised RAI responses that reflect the completion of vendor testing and qualification documentation. During the audit, a summary table was developed that includes the key topics and parameters from the applicable vendor testing and qualification documentation, including TVA's evaluation of the acceptability of the qualification/test results for Watts Bar. The Enclosure provides revised RAI responses with appropriate references to the summary table which is included as an attachment to the Enclosure.

There are no new regulatory commitments in this submittal.

If you have questions regarding this matter, please contact Kevin Casey at (423) 751-8523.

I declare under penalty of perjury that the foregoing is true and correct. Executed on the 25th of June 2014.

Respectfully,

J. W. Shea

Digitally signed by J. W. Shea
DN: cn=J. W. Shea, o=Tennessee Valley Authority, ou=Nuclear Licensing, email=jwshea@tva.gov, c=US
Date: 2014.06.25 16:32:46 -04'00'

J. W. Shea
Vice President, Nuclear Licensing

Enclosure:

Response to NRC Request for Additional Information Related to Overall Integrated Plan in Response to the Commission Order Modifying Licenses with Regard to Requirements for Reliable Spent Fuel Pool Instrumentation

cc: See Page 3

cc (Enclosure):

NRC Regional Administrator - Region II
NRR Director - NRC Headquarters
NRR Project Manager - Watts Bar Nuclear Plant, Unit 1
NRR Project Manager - Watts Bar Nuclear Plant, Unit 2
NRC Senior Resident Inspector - Watts Bar Nuclear Plant, Unit 1
Mitigation Strategies Directorate - NRC Headquarters

ENCLOSURE

TENNESSEE VALLEY AUTHORITY
WATTS BAR NUCLEAR PLANT, UNITS 1 AND 2

RESPONSE TO NRC REQUEST FOR ADDITIONAL INFORMATION RELATED TO OVERALL INTEGRATED PLAN IN RESPONSE TO THE COMMISSION ORDER MODIFYING LICENSES WITH REGARD TO REQUIREMENTS FOR RELIABLE SPENT FUEL POOL INSTRUMENTATION

ATTTACHMENT 1
Watts Bar Nuclear Plant, Units 1 and 2 - Spent Fuel Pool Instrumentation Test and Qualification Summary

ENCLOSURE

TENNESSEE VALLEY AUTHORITY
WATTS BAR NUCLEAR PLANT, UNITS 1 AND 2

RESPONSE TO NRC REQUEST FOR ADDITIONAL INFORMATION RELATED TO OVERALL INTEGRATED PLAN IN RESPONSE TO THE COMMISSION ORDER MODIFYING LICENSES WITH REGARD TO REQUIREMENTS FOR RELIABLE SPENT FUEL POOL INSTRUMENTATION

On October 24, 2013, the NRC issued the Watts Bar Nuclear Plant (WBN) Interim Staff Evaluation and Request for Additional Information (RAI) with regard to requirements for the Reliable Spent Fuel Pool Instrumentation (SFPI) Order EA-12-051 (Reference 1 of this Enclosure). TVA provided an initial response to the RAIs on November 22, 2013 (Reference 2 of this Enclosure) and a follow-up response to RAIs 1 and 18c on January 10, 2014 (Reference 3 of this Enclosure).

Since submittal of References 2 and 3, the NRC has conducted a vendor audit of the SFPI supplier for WBN. As a result, the vendor has provided additional input regarding the response to RAIs 4, 5, 6, 8, 9, 11, 12, 14, 15, 16, and 17 provided by Reference 2. This enclosure provides an updated response to these RAIs impacted by the vendor audit results. Revisions to the original RAI responses are identified by **bold underlined text** to facilitate NRC review. See Reference 2 for the response to RAIs 2, 3, 7, 10, 13, 18a, 18b, 18d, 19, 20, and 21. See Reference 3 for the response to RAIs 1 and 18c.

RAI #4

Please provide additional information describing how the proposed arrangement of the SFP Guided Wave radar sensing cables and routing of the instrumentation cabling between the SFP and final mounting location(s) of the monitoring read-out panels meets the Order requirements with respect to arrangement of the SFP level instrument channels in a manner that provides reasonable protection of the level indication function against missiles that may result from damage to the structure over the SFP.

TVA Response

Physical separation of the primary and backup instrument channel signal cables to the extent practicable is the primary method used to provide reasonable protection of the level indication function against missiles that may result from damage to the structure over the SFP. The primary instrument channel sensor is mounted near the northwest corner of the SFP on the wall separating the spent fuel pool and the fuel cask loading area. From the sensor, the primary signal cable is routed away from the SFP (west) to the adjacent wall. The backup instrument channel sensor is mounted in the opposite side of the SFP in the southeast corner. From the sensor, the backup signal cable is routed away from the SFP (east) to the adjacent wall. This arrangement results in a physical channel separation of a distance greater than the longest length of a side of the SFP.

Additional missile protection is accomplished by providing shielding of the signal cables within the SFP area. **The cables are routed in conduit outward from the sensor brackets at the pool to the adjacent wall penetrations, primarily within trenches cut in the concrete floor.**

The SFP walls and corners provide inherent missile protection for the level sensor cable within the pool.

Physical separation of the primary and backup instrument channel signal cables and power cables is maintained using Class 1E type trained separation, i.e., the primary channel cables are routed as train A cables, while the backup channel cables are routed as train B cables. Further channel separation is achieved by maintaining unit separation, i.e., primary channel equipment is mounted within the Unit 1 structures, while backup channel equipment is mounted within Unit 2 structures.

RAI #5

Please provide the following:

a) *The design criteria that will be used to estimate the total loading on the mounting device(s), including static weight loads and dynamic loads. Describe the methodology that will be used to estimate the total loading, inclusive of design basis maximum seismic loads and the hydrodynamic loads that could result from pool sloshing or other effects that could accompany such seismic forces.*

b) *A description of the manner in which the level sensor (and stilling well, if appropriate) will be attached to the refueling floor and/or other support structures for each planned point of attachment of the probe assembly. Indicate in a schematic the portions of the level sensor that will serve as points of attachment for mechanical/mounting or electrical connections.*

c) *A description of the manner by which the mechanical connections will attach the level instrument to permanent SFP structures so as to support the level sensor assembly.*

(This information was previously requested as RAI-3 in NRC letter dated August 2, 2013)

TVA Response

a) All SFPIS equipment mounting is analyzed to maintain a minimum seismic capacity of high confidence of low probability of failure (HCLPF) equal to or greater than a RLGM of two times (2x) the safe-shutdown earthquake (SSE). To achieve a minimum HCLPF of 2x SSE at WBN, SFPIS SSCs are designed in accordance with plant seismic category I design requirements.

   Applicable TVA design criteria documents are referenced below. The vendor has performed calculations to evaluate the structural integrity of the mounting brackets at the SFP. The model considers load combinations for the dead load, live load and seismic load on the bracket, where seismic loading is for two-times the safe shutdown earthquake (SSE). These loads are then compared to the allowable values of the applicable welds, bolts and members to determine the acceptability of the design.

   Seismic

   The seismic loads are obtained from response spectra curves and damping values for the application. The following methodology was used in determining the stresses developed for the model:

- Frequency analysis is performed to obtain the natural frequencies of the structure in all three directions.
- SSE response spectra analysis is performed to obtain member stresses and support reactions due to the self weight of the bracket and associated components in a seismic event.
- Response spectra analysis results in each direction using SRSS method are then combined. The seismic results in all three directions are combined using SRSS and then combined with the dead load results in absolute values. The combined results are compared with the allowable stress values.

Sloshing

Because of the size and complexity of the spent fuel pool, and practical limitations in preparing a physical scale model suitable for seismic testing, the effects of water sloshing on the SFP level measurement are assessed with analytical methods. As part of work underway to address NRC Order EA-12-049, calculations are being performed to determine plant-specific times for spent fuel pool boiling to begin. To establish initial post-seismic pool conditions, calculation methods from TID-7024, Nuclear Reactors and Earthquakes, 1963, by the US Atomic Energy Commission, are being used to estimate the amount of water sloshed out of the pool by seismic motion. Using this methodology, bounding results for the sloshing effect have been determined and supplemented with alternative analysis methods (e.g. finite-element modeling tools) to make a qualitative assessment of the effects of seismic-induced fluid motion on the cable probe See Attachment 1, item 9. Because some water can be ejected from a pool, it is necessary to assume that the probe interconnecting cable will become wetted or submerged in borated water. Reliable operation of the level measurement sensor with a submerged interconnecting cable has been demonstrated by analysis of previous Westinghouse testing of the cable and vendor's cable qualification. Boron build up analysis has been performed to determine how boron build up on the probe would affect the sensor. **See Attachment 1, Item 11.**

b) The level sensor cable assembly is suspended from a support bracket, which is secured to the refueling floor and/or spent fuel pool curb using concrete anchor bolts. The level sensor cable suspended in the SFP is attached to a threaded coupling, which is secured to a support bracket. The cable leading to the transmitter is also attached to the threaded coupling. **See Attachment 1, Item 12.** The generic illustrations below depict these attachments.

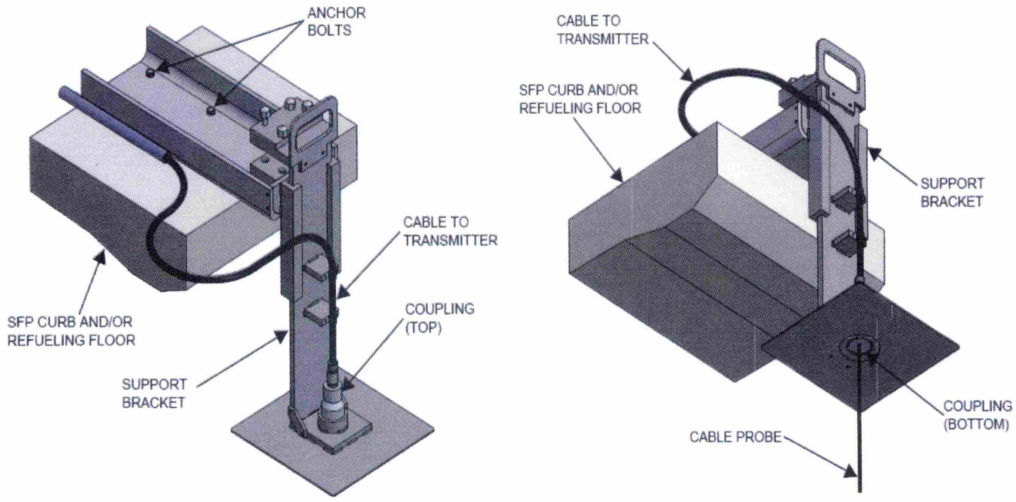

c) See response to b) above **and Attachment 1, Item 13.**

RAI #6

For RAI 5(a) above, please provide the results of the analyses used to verify the design criteria and methodology for seismic testing of the SFP instrumentation and the electronics units, including, design basis maximum seismic loads and the hydrodynamic loads that could result from pool sloshing or other effects that could accompany such seismic forces.

TVA Response

Seismic loads resulting from the analyses performed for the cable probe mounting brackets are documented in the referenced Westinghouse calculations. Seismic loads resulting from the analyses performed for mounting of the instrument enclosures and transmitters are documented in the referenced TVA calculations. Seismic loads resulting from the analyses performed for the instrument enclosure and transmitter mounting is documented in Appendix B of the referenced TVA calculation.

Results of the seismic testing for the vendor supplied equipment are documented in section 5.1 of the referenced Westinghouse report. No equipment failures were noted as a result of the seismic test runs. Per section 7.2.1 of the referenced Westinghouse test strategy, a preliminary sloshing analysis calculation was conducted by the vendor. Seismic test data has been documented in a seismic test report. **See Attachment 1 Items 8, 9, 12, and 13.**

References:

1. Westinghouse calculation CN-PEUS-13-20, Seismic Analysis of the SFP Primary-Mounting Bracket at WBN I & II, Rev. 0
2. Westinghouse calculation CN-PEUS-13-21, Seismic Analysis of the SFP Backup Mounting Bracket at WBN I & II, Rev. 0
3. TVA calculation 47A061026, Wall Mounted Instrument Panel Typical 47A061-26, Rev. 4
4. Westinghouse Report EQ-QR-269, Equipment Qualification Abbreviated Summary Report for the Spent Fuel Pool Instrumentation System, Rev. 0
5. Westinghouse document WNA-PT-00188-GEN, SFPIS Standard Product Test Strategy, Rev. A

TVA will make these documents available for review upon request.

RAI #8

Please provide analysis of the maximum expected radiological conditions (dose rate and total integrated dose) to which the associated transmitter (electronics package) will be exposed at the design location.

TVA Response

The transmitters will be located in the upper containment access room on each unit which is shielded from the fuel in the SFP by concrete around the SFP and the concrete wall of the access room. The combined concrete thickness and angle that the radiation would travel through the concrete are expected to significantly limit the dose to the transmitter. **WBN calculation MDQ0000782013000405 confirms the total integrated dose to the transmitter during a BDB-EE event is acceptable. See Attachment 1 Item 5.**

RAI #9

Please provide information indicating what will be the maximum expected ambient temperature in the room in which the associated transmitter (electronics package) will be located under BDB conditions in which there is no ac power available to run Heating Ventilation and Air Conditioning (HVAC) systems.

TVA Response

The transmitters will be located in the upper containment access room on each unit which is a separate environmental area than the SFP. The upper containment access room is a Harsh Environment for design basis events, but this area will be a mild environment for ELAP. **WBN calculation MDQ0000782013000405 documents the maximum expected ambient temperature in the upper containment access room during a BDB-EE and confirms that it is an acceptable environment for the transmitter. See Attachment 1, Item 5.**

RAI #11

Please provide the following:

a) *A description of the specific method or combination of methods you intend to apply to demonstrate the reliability of the permanently installed equipment under BDB ambient temperature, humidity, shock, vibration, and radiation conditions.*

b) *A description of the testing and/or analyses that will be conducted to provide assurance that the equipment will perform reliably under the worst-case credible design basis loading at the location where the equipment will be mounted. Include a discussion of this seismic reliability demonstration as it applies to a) the level sensor mounted in the SFP area, and b) any control boxes, electronics, or read-out and retransmitting devices that will be employed to convey the level information from the level sensor to the plant operators or emergency responders.*

c) *A description of the specific method or combination of methods that will be used to confirm the reliability of the permanently installed equipment such that following a seismic event the instrument will maintain its required accuracy.*

TVA Response

a) Harsh Environment: The nonmetallic materials of the SFPIS located in the SFP area **were** evaluated to confirm their behavior with respect to radiation aging mechanisms. Any materials for which radiation degradation effects cannot be determined will be tested to demonstrate suitable resistance to radiation. Non-metallic components are rated for use in temperatures higher than 212 degrees F, which corresponds to the saturated steam environment of extended boiling in the spent fuel pool. The ability of the SFPIS to function properly at the expected temperature and steam environmental conditions is demonstrated by test. **See Attachment 1, Items 4 and 6.**

Shock and Vibration: Components of both the primary and backup measurement channels will be permanently installed and fixed to rigid, structural walls or floors of seismic category 1 structures, and will not be subject to anticipated shock or vibration inputs. The level sensor electronics are enclosed in a NEMA-4X housing. The electronics panel utilizes a NEMA-4X rated stainless steel housing. These housings will be mounted to a seismically qualified wall and aid in protecting the internal components from vibration induced damage. No additional vibration and shock testing is required. As provided by the NRC order and the NEI guidance as clarified by the interim staff guidance, the probe, coaxial cable, and the mounting brackets are "inherently resistant to shock and vibration loadings". **See Attachment 1, Item 14.**

Mild Environment: For equipment located in the mild environment, an assessment of equipment aging-related effects was performed to determine if aging has a significant effect on the ability of the equipment to perform following a plant design basis earthquake. Significant age-sensitive effects were identified for incorporation into technical manual recommendations for routine preventive maintenance. See Attachment 1, items 3, and 5. No beyond design basis conditions have been defined for mild-environment equipment. Environmental testing of the electronics cabinet is in accordance with the following standards:

- IEEE-323-1974, Standard for Qualifying Class 1E Equipment for Nuclear Power Generating Stations
- NA 11.2, In-house Environmental Testing, Rev. 1

b) The SFPIS's seismic adequacy shall be demonstrated using the methodology defined in IEEE 344-2004 for seismic category 1, which allows for a combination of test and analysis. Seismic frequency and acceleration test parameters will reflect an envelope of 2X design basis safe shutdown earthquake test response spectra with 5% critical damping used to qualify safety related instrumentation for Westinghouse-supplied-NSSS operating plants. This equipment shall maintain functionality and physical integrity before and after five operating basis earthquakes and one safe shutdown earthquake. **See Attachment 1, Item 8.**

The seismic adequacy of the level sensor assembly in the SFP area, transmitter, transmitter bracket, electronics cabinets with indicators, and coaxial cable was demonstrated by vendor testing in accordance with the standards listed below.

The seismic adequacy of the sensor probe supporting bracket within the SFP area was demonstrated by analysis as discussed in the response to RAI-5a.

- IEEE 344-2004, IEEE Recommended Practice for Seismic Qualification of Class 1E Electrical Equipment for Nuclear Power Generating Stations
- IEEE-323-1974, Standard for Qualifying Class 1E Equipment for Nuclear Power Generating Stations
- USNRC Regulatory Guide 1.100
- NA 11.1, In-house Seismic Testing, Rev. 1

c) The methods described in the response to RAI-11b apply to RAI-11c. The acceptance criteria for these methods states that no degradation or loss of function below a performance level specified by the manufacturer is allowed, and that the system must provide reliable SFP level indication.

RAI #12

For RAI #11 above, please provide the results for the selected methods, tests and analyses utilized to demonstrate the qualification and reliability of the installed equipment in accordance with the Order requirements.

TVA Response

A summary of the test conditions for which the equipment is to be qualified are summarized below as reported by the vendor. Current results of vendor tests and analysis demonstrating the qualification of the installed equipment have been provided by the vendor. **See Attachment 1, Items 3, 4, 5, 6, 7, and 8.**

Environmental Conditions for SFPIS Components in the Spent Fuel Pool Area

The coaxial cable, the coupler, the pool-side bracket and the probe in the spent fuel pool area are required to operate reliably in the service environmental conditions specified for the environmental conditions in the table below.

Parameter	Normal	BDB
Temperature	50-140°F	212°F
Pressure	Atmospheric	Atmospheric
Humidity	0-95% HR	100% HR (saturated steam)
Radiation TID (above pool)	1E03 Rads γ	1E07 Rads γ
Radiation TID (12" above top of fuel rack)	1E07 Rads γ (probe and weight only)	1E07 Rads γ

Environmental Conditions Outside of the Spent Fuel Pool Area

The level sensor electronics, sensor electronics bracket, indicators and the electronics enclosures outside of the spent fuel pool area are required to operate reliably in the service environmental conditions specified for the environmental conditions in the table below.

Parameter	Normal	BDB	BDB (Level Sensor Electronics Only)
Temperature	50-120°F	140°F	170°F
Pressure	Atmospheric	Atmospheric	Atmospheric
Humidity	0-95% HR	0-95% HR (non-condensing)	0-100% HR (non-condensing)
Duration	4 days	4 days	4 days
Radiation TID	≤ 1E03 R γ	≤ 1E03 R γ	≤ 1E03 R γ

Thermal Aging

The SFPIS thermal aging process performed on the interconnecting cable and cable coupler inside the spent fuel pool area, followed by successful radiation aging and seismic testing of the components, has demonstrated a 2.5 year life for the level sensor after a beyond-design-basis event. Any age-sensitive effects will be incorporated into the technical manual recommendations for routine preventive maintenance. **See Attachment 1, Item 6.**

Seismic Cat-1 Testing/Analysis

The SFPIS Cat-1 seismic testing performed by the vendor and manufacturer, together with the technical evaluations performed by the vendor, confirm that the SFPIS is seismically acceptable for plant use and meets the seismic requirements of the vendor's design specification, which states that the SFPIS's seismic adequacy shall be demonstrated using the methodology defined in IEEE 344-2004 for seismic category I, and that the equipment shall maintain functionality and physical integrity before and after five Operating Basis Earthquakes (OBEs) and one Safe Shutdown Earthquake (SSE). Vendor seismic testing profile exceeds 2x SSE for WBN.

Vibration Justification

Refer to RAI-11a response.

Sloshing Justification (with exception of Boron/Boric Acid)

During the SFPIS product development, a sloshing calculation was performed by the vendor to demonstrate that the probe would not be "sloshed" out of the spent fuel pool during a seismic event. This calculation concluded that, regardless of the construction, the probe will not be thrown out of the pool during a seismic event. **See Attachment 1, Item 9.**

RAI #14

Please provide the results of the calculation depicting the battery backup duty cycle requirements demonstrating that its capacity is sufficient to maintain the level indication function until offsite resource availability is reasonably assured.

TVA Response

The calculation concludes that the backup battery life is at least 4.22 days at full charge after loss of onsite ac power based on maximum power consumption throughout the duration of the battery life. See Attachment 1, Item 18.

RAI #15

Please provide the following:

a) *An estimate of the expected instrument channel accuracy performance (e.g., in percentage of span) under both a) normal spent fuel pool level conditions (approximately Level 1 or higher) and b) at the BDB conditions (i.e., radiation, temperature, humidity, post-seismic and post-shock conditions) that would be present if the SFP level were at the Level 2 and Level 3 datum points.*

b) *A description of the methodology that will be used for determining the maximum allowed deviation from the instrument channel design accuracy that will be employed under normal operating conditions as an acceptance criterion for a calibration procedure to flag to operators and to technicians that the channel requires adjustment to within the normal condition design accuracy.*

(This information was previously requested as RAI-6 in the Reference 6 NRC letter dated August 2, 2013)

TVA Response

a) Each instrument channel is expected to be accurate to within an estimated ±1% of calibrated span during normal spent fuel pool level conditions. The instrument channels are expected to retain this estimated accuracy after being subjected to BDB conditions. This estimate is based on the vendor's specification documentation. **See Attachment 1, Item 17.**

b) Technicians will be required to perform an instrument channel calibration in the event that the instrument channel output lies outside the acceptance band established in the setpoint and scaling documents. The acceptance band or "as-left tolerance" is defined as the acceptable parameter variation limit above or below the desired output for a given input standard associated with the calibration of the instrument channel.

   The instrument channel acceptance band, which may or may not be symmetrical, is calculated using the square root of the sum of the squares (SRSS) combination of the as-left tolerance for each component comprising the instrument loop. The as-left tolerance of each component is equal to or greater than the reference accuracy of the device being calibrated, but is not so large that it could prevent or mask detection of instrument degradation or failure. Note that the SRSS method is only used for uncertainty terms that are random, independent, and posses a normal (bell-shaped) distribution; otherwise, the uncertainty term is combined through summation, either within the SRSS (for dependent terms) or outside of the SRSS (for bias and non-normally distributed terms). **See Attachment 1, Item 20.**

RAI #16

Please provide analysis verifying the instrumentation accuracy and that the proposed instrument performance is consistent with the estimated accuracy normal and BDB values. Please demonstrate that the channels will retain these accuracy performance values following a loss of power and subsequent restoration of power.

TVA Response

The Guided Wave transmitter is a microprocessor based transmitter with its operating system in firmware and adjustable parameters stored in non-volatile memory. If power is lost and later restored, the transmitter remains calibrated to its original parameters and will restore indication to actual pool level within the stated loop accuracies. **See Attachment 1, Item 17.**

RAI #17

Provide the SFP level instrumentation accuracy analysis results that confirm that level instrument accuracy is sufficient to read Level 3 with sufficient conservatism that ensures the fuel remains covered.

TVA Response

See Attachment 1, Item 17.

References:

1. Letter from NRC to TVA, "Watts Bar Nuclear Plant, Units 1 and 2 - Interim Staff Evaluation and Request for Additional Information Regarding the Overall Integrated Plan for Implementation of Order EA-12-051, Reliable Spent Fuel Pool Instrumentation (TAC No. MF0951 and MF1178)," dated October 24, 2013 (ML13275A373)

2. Letter from TVA to NRC, "Response to NRC Request for Additional Information Related to Overall Integrated Plan in Response to the Commission Order Modifying Licenses with Regard to Requirements for Reliable Spent Fuel Pool Instrumentation (Order Number EA-12-051) (TAC Nos. MF0951 and MF1178)," dated November 22, 2013 (ML13333B282)

3. Letter from TVA to NRC, "Follow-up Response to NRC Request for Additional Information Related to Overall Integrated Plan in Response to the Commission Order Modifying Licenses with Regard to Requirements for Reliable Spent Fuel Pool Instrumentation (Order Number EA-12-051) (TAC Nos. MF0951 and MF1178)," dated January 10, 2014 (ML14014A137)

ATTTACHMENT 1
Watts Bar Nuclear Plant, Units 1 and 2 - Spent Fuel Pool Instrumentation
Test and Qualification Summary

#	Topic	Parameter Summary	Westinghouse Reference Document #	Additional Comment	Test or Analysis Results	Licensee Evaluation
1	Design Specification	SFPIS Requirements derived from References 1, 2, & 3	WNA-DS-02957-GEN	Contains technical SFPIS requirements based on NRC order, NEI guidance, and the ISG listed above.	N/A	TVA has reviewed WNA-DS-02957-GEN Rev 3 and it bounds WBN requirements from References 1, 2 and 3 as discussed in the following responses, and is therefore acceptable. Refer to RAI #11 and #12 responses.
2	Test Strategy	Per Requirements.	WNA-PT-00188-GEN	Strategy for performing the testing and verification of the SFPIS and pool-side bracket.	N/A	TVA has reviewed WNA-PT-00188-GEN and found it to be acceptable for the current design. Refer to RAI #5, #6, #11 and #12 responses.
3	Environmental qualification for electronics enclosure with Display	50° F to 140° F, 0 to 95% RH TID ≤ 1E03 R γ normal (outside SFP area) TID ≤ 1E03 R γ abnormal (outside SFP area)	EQ-QR-269 and WNA-TR-03149-GEN for all conditions.	Results are summarized in EQ-QR-269 and WNA-TR-03149-GEN. Radiation Aging verification summarized in Section 5 of WNA-TR-03149-GEN. .	Test passed conditions described.	The abnormal temperature and humidity values of 60°F to 104°F and 10 to 90% RH from TVA drawing 2-47E235-07 (for Rooms A2 and A24) are bounded by the values in Section 3.3 of WNA-TR-03149-GEN Rev 1, which is acceptable. Section 4.4 of WNA-TR-03149-GEN Rev 1 states that the service life of electronics enclosure is 10 years. The normal 10 year TID of 4.5E02 R from TVA drawing 2-47E235-07 (for Rooms A2 and A24) is bounded by the justification for aging for TID less than 1E04 rads from Section 5.1.3 of WNA-TR-03149-GEN Rev 1, and the qualification value of 1E3 rads, which is acceptable. Abnormal dose is not applicable. Refer to RAI #11 and #12 responses.
4	Environmental Testing for Level Sensor components in SFP area – Saturated Steam & Radiation	50° F to 212° F and 100% humidity	EQ-QR-269, Rev. 1	Testing summarized in Section 5.7.	Passed	The temperature and humidity values of 212°F and 100% RH from TVA calculation MDQ0000782013000405 (for Volume 2) are bounded by the test results from EQ-QR-269 Rev 1 as described in Section 3.2 of WNA-TR-03149-GEN Rev 1, which is acceptable. Refer to RAI #11 and #12 responses.
		1E03 R γ normal (SFP area)	WNA-TR-03149-GEN	Thermal Aging & radiation aging verification summarized in Sections 4.1 and 5 (entire system) of WNA-TR-03149-GEN.	Passed	Section 4.4 of WNA-TR-03149-GEN Rev 1 states that the service life of components in the SFP area will be 2.5 years. The normal 2.5 year TID of 2.2E03 R (for Room A13) from TVA drawing 2-47E235-37 is insignificant in comparison to the BDB dose of 1E07 R from Section 4.3 of EQ-QR-269 Rev 1, and is assumed to be included in the 10% test margin, and therefore bounded by Section 5.1.2 of WNA-TR-03149-GEN Rev 1, which is acceptable.
		1E07 R γ BDB (SFP area)	EQ-TP-354 (procedure) Actual test report is in progress.	Additional thermal & radiation aging programs being conducted under test procedure EQ-TP-354.	Additional aging program is in progress to achieve longer life.	The BDB radiation value of 1.823E6 rem from TVA calculation MDQ0000782013000405 (summation of SC and TPC dose for Location 1) is bounded by Section 5.1.2 of WNA-TR-03149-GEN Rev 1 (≤1E7 R), which is acceptable. TVA will review the results of the additional testing when complete to address the 1.25 yr qualified life for the cable connectors and cable assembly to avoid early replacement activities. (See Open Item 1.) Refer to RAI #11 and #12 responses.
5	Environmental Testing for Level Sensor Electronics Housing – outside SFP	50° F to 140° F, 0 to 95% RH	EQ-QR-269, Rev. 1	Testing summarized in Section 5.5.	Passed	The BDB temperature and humidity values of 99°F to 140°F and 35% RH to 80% RH (for Volumes 3 and 4 up to 96 hrs) from TVA calculation MDQ0000782013000405 are bounded by Section 5.5 of EQ-QR-269, Rev. 1, which is acceptable. Refer to RAI #9, #11 and #12 responses.
		100% RH	WNA-TR-03149-GEN	100% humidity addressed in Section 7.5.	Passed	The BDB humidity value of 80% RH from TVA calculation MDQ0000782013000405 (for Volumes 3 and 4) is bounded by Section 7.5 of WNA-TR-03149-GEN Rev 1, which is acceptable. Refer to RAI #11 and #12

#	Topic	Parameter Summary	Westinghouse Reference Document #	Additional Comment	Test or Analysis Results	Licensee Evaluation
						responses.
		TID ≤ 1E03 R γ normal (outside SFP area) TID ≤ 1E03 R γ abnormal (outside SFP area)	WNA-TR-03149-GEN	Radiation Aging verification summarized in Section 5.	Passed	Section 4.4 of WNA-TR-03149-GEN Rev 1 states that the service life of the level sensor will be 2.5 years. Extrapolation of the worst-case dose rate of 6.04 mrem/hr from TVA calculation MDQ0000782013000405 (summation of SC and TPC dose rate for Location 2) results in a 2.5 year TID of approximately 133 Rem, which is bounded by Section 5.1.3 of WNA-TR-03149-GEN Rev 1 (≤1E3 R), which is acceptable. Note that the 2.5 year TID from TVA drawing 2-47E235-78 (for Rooms A12 and A14) is 6.25E4 R (>1E03 R), which represents the upper limit for the general area, and is not necessarily representative of the TID for the location of the level sensor electronics; therefore, the worst-case dose rate from TVA calculation MDQ0000782013000405 was used for location specific values, which is conservative. The worst-case BDB dose value of 1.015 rem for 7 days (summation of SC and TPC for Location 2) from TVA calculation MDQ0000782013000405 are bounded by Section 5.1.3 of WNA-TR-03149-GEN Rev 1 (≤ 1E03 R γ for 4 days per Section 4.5.2 of WNA-DS-02957-GEN), which is acceptable. Abnormal dose is not applicable. Refer to RAI #8, #11 and #12 responses.
6	Thermal & Radiation Aging – organic components in SFP area	1E03 R γ normal (SFP area)	EQ-QR-269 and WNA-TR-03149-GEN	Thermal Aging & radiation aging verification summarized in Sections 4.1 and 5 (entire system) of WNA-TR-03149-GEN.	Passed	TVA has reviewed EQ-QR-269 Rev 1 and WNA-TR-03149-GEN Rev 1 for this topic and found them acceptable for WBN Licensing. See responses to Item 4 above.
		1E07 R γ BDB (SFP area)	EQ-TP-354 (procedure) Actual test report is in progress.	Additional thermal & radiation aging programs being conducted under test procedure EQ-TP-354.	Additional aging program is in progress to achieve longer life.	TVA will review the results of the aging program when complete. See responses to Item 4 above.
7	Basis for Dose Requirement	<u>SFP Normal Conditions:</u> 1E03 R γ TID (above pool) 1E09 R γ TID (1' above fuel rack) <u>SFP BDBE Conditions:</u> 1E07 R γ TID (above pool) < 1E07 R γ TID (1' above fuel rack)	LTR-SFPIS-13-35 and WNA-DS-02957-GEN	Explanation of Basis for Radiation Dose Requirement (includes the clarification of production equivalency of electronics enclosure used for Seismic and EMC Testing)	Passed for all conditions	For normal and BDB conditions above the pool, see responses to Item 4 above. LTR-SFPIS-13-35 was not provided to TVA. Radiation values 1' above the fuel rack have not been evaluated in TVA calculation MDQ0000782013000405, however, Section 4.5.1 of WNA-DS-02957-GEN Rev 3 states that only probe's stainless steel cable and weight are exposed at this location. Therefore, the justification for components that are inherently resistant to radiation effects in Section 5.1.2 of WNA-TR-03149-GEN Rev 1 is bounding for WBN, which is acceptable. Refer to RAI #11 and #12 responses.
8	Seismic Qualification	Per Spectra in WNA-DS-02957-GEN	EQ-QR-269	EQ-QR-269 summarizes the testing performed by Westinghouse	Passed	TVA has reviewed the seismic qualification testing in EQ-QR-269 Rev 1 and WNA-TR-03149-GEN Rev 1 and finds them to be acceptable. Site-specific response spectra are appended to CN-PEUS-13-20 and CN-PEUS-13-21 (see Item 12 below). Refer to RAI #5, #6, #7, #11 and #12 responses.
			WNA-TR-03149-GEN	WNA-TR-03149-GEN provides high level summary of the pool-side bracket analysis and optional RTD.	Passed	
			EQ-QR-269, Rev. 1	Seismic Pull test for new connectors documented in Section 4.4.	Passed	

#	Topic	Parameter Summary	Westinghouse Reference Document #	Additional Comment	Test or Analysis Results	Licensee Evaluation
9	Sloshing	N/A	LTR-SEE-II-13-47	Calculation to demonstrate that probe will not be sloshed out of the SFP.	Passed	TVA has reviewed LTR-SEE-II-13-47 and agrees with the conclusion that sloshing will not throw the instrument out of the pool.
			WNA-TR-03149-GEN	Sloshing is also addressed in Section 7.2.	Passed	TVA has reviewed Section 7.2 of WNA-TR-03149-GEN Rev 1 and found it to be acceptable. The WBN spent fuel pool level is sufficiently below the bracket such that sloshing will not impact the bracket. This is acceptable. Refer to RAI #5, #6 and #12 responses.
10	Spent Fuel Pool Instrumentation System Functionality Test Procedure	Acceptance Criteria for Performance during EQ testing	WNA-TP-04613-GEN	Test procedure used to demonstrate that SFPIS meet its operational and accuracy requirements during Equipment Qualification Testing programs.	See applicable EQ test.	WNA-TP-04613-GEN was not provided to TVA. WBN has reviewed WNA-TP-00189-GEN "Integrated Functional Test Plan" and found it acceptable, with the exception of EMC qualification to Performance Criteria A, which will be independently verified by TVA. Refer to RAI #15 through #18 responses.
11	Boron Build-Up	Per requirement in WNA-DS-02957-GEN	WNA-TR-03149-GEN	Boron build up demonstrated through Integrated Functional Test (IFT).	Passed	WBN has reviewed the justification in Section 7.4 of WNA-TR-03149-GEN Rev 1 and found it acceptable. Refer to RAI #5 and #12 response.
12	Pool-side Bracket Seismic Analysis	N/A	CN-PEUS-13-20 CN-PEUS-13-21	Also includes hydrodynamic forces, as appropriate.	Passed	WBN seismic requirements for 2x SSE HCLPF are bounded by CN-PEUS-13-20 and CN-PEUS-13-21, which is acceptable. Refer to RAI #5, #6, #7, #11 and #12 responses.
13	Additional Brackets (Sensor Electronics and Electronics Enclosure)	N/A	WNA-DS-02957-GEN	Weights provided to licensees for their own evaluation.	N/A	Instrument panel mounting is qualified by TVA calculation 47A061026 based on WNA-DS-02957-GEN Rev 0. A revision to 47A061026 is planned based on the increased component weights in WNA-DS-02957-GEN Rev 3. TVA evaluates the seismic mounting requirements in accordance with WBN safety related requirements. Refer to RAI #5, #6, #7, #11 and #12 responses.
14	Shock & Vibration	WNA-DS-02957-GEN	WNA-TR-03149-GEN	Section 7 provides rationale and summary of RTD.	N/A	TVA concurs with the Westinghouse evaluation of shock and vibration in Section 7.1 of WNA-TR-03149-GEN Rev 1. Refer to RAI #11 and #15 responses.
15	Requirements Traceability Matrix	Maps Requirements to documentation / evidence that Requirement is met	WNA-VR-00408-GEN	The RTM maps the requirements of the NRC order, NEI guidance, ISG to the applicable technical requirements in the SFPIS design specification and maps the design specification requirements to the documentation demonstrating the requirement is met.	Complete	TVA has reviewed Revision A of WNA-VR-00408-GEN and concurs with the documents that have been provided.
16	Westinghouse Factory Acceptance Test, including testing of dead-zones	IFT Functional Requirements from WNA-DS-02957-GEN	WNA-TP-04752-GEN	The Integrated Functional Test (IFT) demonstrates functionality of the full system for each customer's FAT, which includes calibration of each channel.	Pilot IFT executed/passed Watts Bar IFT executed/passed	WBN has reviewed WNA-TP-04752-GEN and found it to be acceptable with the exception of any EMI/RFI tests that are being independently verified by TVA. Refer to RAI #15, #16, #18, #20 and #21 responses.
		12" dead-zone at top of probe 4" dead-zone at bottom of probe	WNA-TP-04752-GEN	Dead-zone tests are in Section 9.6.2.	N/A	The WBN instrument scaling from 724' - 9.5" to 749' - 2.5" from TVA setpoint and scaling documents 0-L-78-42 and 0-L-78-43 is bounded by the unmeasurable zones from Section 9.6.2 of WNA-TP-04752-GEN. Refer to RAI #2 response.
17	Channel Accuracy	+/- 3 inches per WNA-DS-02957-GEN	WNA-CN-00301-GEN	Channel accuracy from measurement to display.	Passed	TVA has reviewed the channel accuracy in WNA-DS-02957-GEN Rev 1 and WNA-CN-00301-GEN and found them to be acceptable. The WBN channel accuracy of ±1.7 inches from TVA setpoint and scaling documents 0-L-78-42 and 0-L-78-43 is considered to be conservative. Refer to RAI #15, #16 and #17 responses.

#	Topic	Parameter Summary	Westinghouse Reference Document #	Additional Comment	Test or Analysis Results	Licensee Evaluation
18	Power Consumption	3 day battery life (minimum) 0.257 Amps power consumption	WNA-CN-00300-GEN	N/A	Passed	TVA has reviewed WNA-CN-00300-GEN and concurs that battery life of 4.22 days from Table 5-7 is adequate for WBN. The 0.257A loading does not challenge the WBN distribution system per TVA calculations WBNEEBMSTI120016, WBPEVAR9509001, EDQ00299920080010, WBNEEBMSTI070018, WBNEEBMSTI090046, and EDQ00299920080006, which is acceptable. Refer to RAI #14 response.
19	Technical Manual	N/A	WNA-GO-00127-GEN	Information and instructions for Operation, Installation, use, etc. are included here.	N/A	WBN has received WNA-GO-00127-GEN Rev 1 and will use it as input for procedure preparation. Refer to RAI #11 and #12 responses.
20	Calibration	Routine Testing/calibration verification and Calibration method	WNA-TP-04709-GEN	Also, includes preventative maintenance actions such as those for Boron buildup and cable probe inspection.	N/A	WBN has received WNA-TP-04709-GEN and will use it as input for procedure preparation. An Acceptable As-Left calibration value of ±0.29 inches will be used per TVA setpoint and scaling documents 0-L-78-42 and 0-L-78-43, which is conservative. Refer to RAI #15, #16, #18, #20 and #21 responses.
21	Failure Modes and Effects Analysis (FMEA)	N/A	WNA-AR-00377-GEN	Addresses mitigations for the potential failure modes of the system.	N/A	Not required.
22	Emissions Testing	RG 1.180 R1 test conditions	EQ-QR-269, Rev. 1	Documented in Section 5.6.	Passed	TVA has reviewed the Westinghouse test report and found it meets requirements for radiated emissions limits and criteria B for susceptibility testing. In addition, TVA has conducted additional EMI testing (B43 140513 001) and intends to install the channel such that Level A compliance exists around the transmitter and coax. Level A compliance at the probe cannot be obtained in the VHF frequency band (less than 200 MHZ), however VHF radios will be phased out from all plant organizations other than security. Security will only use VHF as a backup channel if the primary channel is unavailable, so the potential for spurious indication is extremely small and does not exist during BDB-EE when low water level (NEI 12-02 level 2) exists in SFP.

Open Items:

Note - this item will be provided to the NRC under the audit process described in the March 26, 2014, NRC Letter, "Nuclear Regulatory Commission Audits of Licensee Responses to Reliable Spent Fuel Pool Instrumentation Order EA-12-051.

1) TVA will review the results of the additional thermal & radiation aging programs being conducted under test procedure EQ-TP-354 testing when complete to address the 1.25 yr qualified life for the cable connectors and cable assembly to avoid early replacement activities.

References:

1) ML12056A044, NRC Order EA-12-051, "ORDER MODIFYING LICENSES WITH REGARD TO RELIABLE SPENT FUEL POOL INSTRUMENTATION," Nuclear Regulatory Commission, March 12, 2012.
2) ML12240A307, NEI 12-02 (Revision 1), "Industry Guidance for Compliance with NRC Order EA-12-051, "To Modify Licenses with Regard to Reliable Spent Fuel Pool Instrumentation" August, 2012.
3) ML12221A339, Revision 0, JLD-ISG-2012-03, "Compliance with Order EA-12-051, Reliable Spent Fuel Pool Instrumentation", August 29, 2012, Nuclear Regulatory Commission Japan Lessons-Learned Project Directorate.
4) Westinghouse Proprietary Document, WNA-DS-02957-GEN, "Spent Fuel Pool Instrumentation System (SFPIS) Standard Product System Design Specification," Revision 3 reviewed by NRC in April 2014; current revision is Revision 3.
5) Westinghouse Proprietary Document, WNA-PT-00188-GEN, "Spent Fuel Pool Instrumentation System (SFPIS) Standard Product Test Strategy," Revision 1 reviewed by NRC in February 2014; current revision is Revision 2.
6) Westinghouse Proprietary Document, EQ-QR-269, "Design Verification Testing Summary Report for the Spent Fuel Pool Instrumentation," Revision 1 reviewed by NRC in April 2014; current revision is Revision 1.
7) Westinghouse Proprietary Document, WNA-TR-03149-GEN, "SFPIS Standard Product Final Summary Design Verification Report," Revision 1 reviewed by NRC in April 2014; current revision is Revision 1.
8) Westinghouse Proprietary Document, EQ-TP-351, "Environmental Qualification Test Procedure for the Spent Fuel Pool Instrumentation System Coaxial Cable and Connectors Inside the Spent Fuel Pool Area," Revision 0 reviewed by the NRC in February 2014; current revision is Revision 0.
9) Westinghouse Proprietary Document, EQ-TP-354, "Mechanical Preconditioning, Thermal Aging, and Radiation Aging Procedure for the Spent Fuel Pool Instrumentation System Coaxial Cables and Couplers," Revision 0 reviewed by the NRC in February 2014; current revision is Revision 0.
10) Westinghouse Proprietary Document, EQ-TP-360, "Environmental Test Procedure for the Sensor Housing for Spent Fuel Pool Instrumentation System," Revision 0 reviewed by the NRC in February 2014; current revision is Revision 0.
11) Westinghouse Proprietary Document, LTR-SFPIS-13-35, "SFPIS: Basis for Dose Requirement and Clarification of Production Equivalency of Electronics Enclosure Used for Seismic Testing," Revision 0 reviewed by the NRC in February 2014; current revision is Revision 1.
12) Westinghouse Proprietary Document, LTR-SEE-II-13-47, "Determination if the Proposed Spent Fuel Pool Level Instrumentation can be Sloshed out of the Spent Fuel Pool during a Seismic Event," Revision 0 reviewed by the NRC in February 2014; current revision is Revision 0.
13) Westinghouse Proprietary Document, WNA-TP-04613-GEN, "Spent Fuel Pool Instrumentation System Functionality Test Procedure," Revision 5 reviewed by the NRC in February 2014; current revision is Revision 5.
14) Westinghouse Proprietary Document, CN-PEUS-13-20, "Seismic Analysis of the SFP Primary-Mounting Bracket at WBN I & II," Revision 1 reviewed by the NRC in February 2014; current revision is Revision 1.
15) Westinghouse Proprietary Document, CN-PEUS-13-21, "Seismic Analysis of the SFP Backup Mounting Bracket at WBN I & II," Revision 1 reviewed by the NRC in February 2014; current revision is Revision 1.
16) Not Used
17) Westinghouse Proprietary Document, WNA-TP-04752-GEN, "Spent Fuel Pool Instrumentation System Standard Product Integrated Functional Test Procedure," Revision 1 reviewed by the NRC in February 2014; current revision is Revision 1.
18) Westinghouse Proprietary Document, WNA-CN-00301-GEN, "Spent Fuel Pool Instrumentation System Channel Accuracy Analysis," Revision 0 reviewed by the NRC in February 2014; current revision is Revision 1.
19) Westinghouse Proprietary Document, WNA-CN-00300-GEN, "Spent Fuel Pool Instrumentation System Power Consumption Calculation," Revision 0 reviewed by the NRC in February 2014; current revision is Revision 1.
20) Westinghouse Proprietary Document, WNA-GO-00127-GEN, "Spent Fuel Pool Instrumentation System Standard Product Technical Manual," Revision 1 reviewed by the NRC in April 2014; current revision is Revision 1.
21) Westinghouse Proprietary Document, WNA-TP-04709-GEN, "Spent Fuel Pool Instrumentation System Calibration Procedure," Revision 3 was reviewed by the NRC in February 2014; current revision is Revision 4.
22) Westinghouse Proprietary Document, WNA-AR-00377-GEN, "Spent Fuel Pool Instrumentation System Failure Modes and Effect Analysis," Revision 2 was reviewed by the NRC in February 2014; current revision is Revision 3.

WBN References:

23) WBN Calculation MDQ0000782013000405, Environmental Conditions For Spent Fuel Pool Level Instrumentation During Extended Station Blackout Conditions, Revision 0.
    a. Appendix A contains temperature and humidity values
    b. Section 7.1 contains radiation values
24) WBN Drawing 2-47E235-07, "Environmental Data Environment - Mild El 757.0" Revision 0.
    a. Shutdown Board Rooms A2 and A24
25) WBN Drawing 2-47E235-37, "Environmental Data Environment - Mild El 757.0" Revision 0.
    a. SFP Area
26) WBN Calculation 47A061026, "Wall Mounted Instrument Panel Typical 47A061-26" Revision 4.
27) WBN Nuclear Engineering Setpoint and Scaling Documents 0-L-78-42 and 0-L-78-43, Revision 0.
28) WBN Calculation WBNEEBMSTI120016, "120 VAC Vital Inverter Loading" Revision 148.
29) WBN Calculation WBPEVAR9509001, "Appendix R - Multiple High Impedance Fault Analysis" Revision 79.
30) WBN Calculation EDQOO299920080010, "120 VAC Vital Power Load Flow and Voltage Drop Analysis" Revision 15.
31) WBN Calculation WBNEEBMSTI070018, "120 VAC Protection, Coordination and Short Circuit Study" Revision 87.
32) WBN Calculation WBNEEBMSTlO90046, "Electrical Heat Generation in the Auxiliary Building - Elevation 757.0 (Rms A2 &A24)" Revision 8.
33) WBN Calculation EOQOO299920080006, "Unit 2 Class 1E V3 Cable Ampacity" Revision 20.
34) TVA Test Report (TBD), "EMI/RFI Susceptibility Testing for the Westinghouse-Supplied SFPIS" (anticipated)