AEOD ENGINEERING EVALUATION REPORT

UNIT: H. B. Robinson 2
DOCKET NO.: 50-261
LICENSEE: Carolina Power and Light Co.
NSSS/AE: Westinghouse/Ebasco

EE REPORT NO.: AEOD/E902
DATE: March 31, 1989
EVALUATOR/CONTACT: H. L. Ornstein

SUBJECT: FIRES AND EXPLOSIVE MIXTURES RESULTED FROM INTRODUCTION OF HYDROGEN INTO PLANT AIR SYSTEMS

EVENT DATE: January 6 and 7, 1989

SUMMARY

In attempting to perform testing on the plant's main generator, maintenance personnel connected the plant's bulk hydrogen system to an instrument air header. As a result, for about four hours hydrogen entered the instrument and station air systems. During that time period, there were two fires in the turbine building.

Subsequently, samples taken from the air systems' piping in the reactor auxiliary building had hydrogen concentrations as high as one and a half times the lower explosive limit (8% hydrogen). Samples taken from open spaces of the reactor auxiliary building were not found to contain hydrogen (References 1, 2, 3, and 4).

The primary safety concern is that improper use of combustible or explosive gases, hydrogen in particular, can create significant hazards which have not been considered in the plant design, and can cause degradation or destruction of safety-related equipment in a manner not considered in the plant safety analyses. In addition, the introduction of hydrogen into plant air systems can create potential dangers to plant personnel.

It is suggested that the NRC program offices consider the January 1989 hydrogen intrusion event at the H. B. Robinson 2 plant, the additional events listed in this engineering evaluation report, and AEOD's previous recommendations on the use of pressurized gases (AEOD Case study report C501, NUREG/CR-3441, Reference 5) in the resolution of Generic Issue 106," "Piping and the Use of Highly Combustible Gases in Vital Areas."

DISCUSSION

Event Description

On January 6, 1988, after extensive maintenance was done on the plant turbine and main generator, licensee maintenance personnel inadvertently connected the plant's bulk hydrogen system to the plant's instrument air system. A temporary connection had been made to supply air to the main generator to perform an air leakage test of the main generator. The connection was made without the benefit of specific procedures. Furthermore, the personnel performing the hydrogen gas lineup did not refer to plant system drawings.

One tube from the bulk hydrogen supply system was connected directly to the instrument air system (See Figure 1). The bulk hydrogen supply tank was half empty at the time and it contained approximately 10,000 standard cubic feet of hydrogen. Because the hydrogen pressure was greater than the instrument air system pressure (120 psi vs. 95 psi), hydrogen entered the instrument air system. At the time of this event the station air compressor was out of service, and the instrument air system was cross-connected with the station air system in order to feed the station air system. As a result, hydrogen gas entered both the instrument and station air systems.

During the four-hour period that the bulk hydrogen supply was connected to the instrument and station air systems, two hydrogen fires occurred inside the turbine building. One fire took place in a box near the moisture separator reheaters, and the other fire took place at the discharge of an air-operated grinder.

Subsequent to the second fire and the discovery of the hydrogen intrusion, the air lines were isolated, work which could cause sparking was stopped, use of the air systems was suspended, and the air piping was sampled and purged.

Samples taken from the air systems in the turbine building and in the reactor auxiliary building indicated that hydrogen concentrations as high as 50% greater than the lower explosive limit were present in the air lines in the reactor auxiliary building.

Samples taken from the open areas of the reactor auxiliary building did not contain any hydrogen.

The event occurred at the end of an outage (the plant was shutdown, preparations were being made to return to power, the primary system was full and the reactor head bolts had been tensioned).

Other Operating Experience

A list of 8 other events involving combustible or explosive mixtures, at nuclear power plants is shown below. Except for the 1989 event at Byron 2, all the events were found by a quick search of the LER SCSS database.

Plant	Date	Description of Event
Byron 2	1/16/89	During a refueling outage there was a hydrogen detonation in a safety injection accumulator. A grab sample indicated that initially there was a hydrogen concentration of 7.6%.
San Onofre 1	7/17/81	Detonation in a waste gas decay tank. Back leakage of air into the nitrogen system provided oxygen as a cover gas which resulted in a flammable mixture.

Salem 1	4/25/86	High oxygen concentration in a waste gas decay tank (no ignition).
Salem 1	12/27/87	High oxygen concentration in a waste gas decay tank (no ignition).
Zion 1	1/6/87	Explosive mixture of hydrogen and oxygen in 3 holdup tanks inside the auxiliary building (no ignition).
Grand Gulf 1	2/27/88	Hydrogen ignition in the off-gas system resulted in charcoal adsorber bed fires.
Perry 1	6/30/87	A generator failure resulted in excessive hydrogen concentration in a generator compartment (no ignition).
Byron 1	7/11/85	Explosive mixture of hydrogen and oxygen in a waste gas decay tank (no ignition).

FINDINGS AND CONCLUSIONS

The January 1989 event at the H. B. Robinson 2 plant, and many of the other events noted above exemplify the fact that greater attention needs to be paid to combustible/explosive gases at nuclear power plants.

The primary safety concern is that improper use of combustible or explosive gases, hydrogen in particular, can create significant hazards which have not been considered in the plant design, and can cause degradation or destruction of safety-related equipment in a manner not considered in the plant safety analyses. In addition, the introduction of hydrogen into plant air systems can create potential dangers to plant personnel.

A previous AEOD case study, C501: NUREG/CR-3551 (Reference 5) has raised these issues, and has provided recommendations on the subject (see enclosure 1). NRC's Office of Nuclear Regulatory Research (RES) is addressing the use of hydrogen gas in nuclear power plants as part of Generic Issue 106, "Piping and the Use of Highly Combustible Gases in Vital Areas," which has received a medium priority. In addition, the Office of Nuclear Reactor Regulation (NRR) has issued an Information Notice on the subject of hydrogen leakage problems (Reference 6).

AEOD suggests that:

1. RES/NRR consider the aforementioned events in the resolution of AEOD's C501 recommendations, and in the resolution of Generic Issue 106, "Piping and the Use of Highly Combustible Gases in Vital Areas," and

2. NRR issue an information notice informing the licensees of the hydrogen gas intrusion event which occurred at the H. B. Robinson 2 plant.

REFERENCES

1. Carolina Power and Light Company, Licensee Event Report (LER) 50-261/89-001, H. B. Robinson Plant, Unit 2, dated February 3, 1989.

2. U.S. Nuclear Regulatory Commission, Daily Report, Region II, January 9, 1989.

3. U.S. Nuclear Regulatory Commission 10 CFR 50.72 Report, Event Number 14435, dated January 7, 1989.

4. Telephone Discussion between H. L. Ornstein and L. Garner, NRC Senior Resident Inspector at H. B. Robinson-2, dated March 15, 1989.

5. U.S. Nuclear Regulatory Commission, "Safety Implications Associated with In-Plant Pressurized Gas Storage and Distribution Systems in Nuclear Power Plants," NUREG/CR-3551, AEOD Case Study C501, dated May 1985.

6. U.S. Nuclear Regulatory Commission, Information Notice No. 87-20, "Hydrogen Leak in Auxiliary Building," April 20, 1987.

FIGURE 1

H. B. ROBINSON 2 HYDROGEN AND AIR SYSTEMS

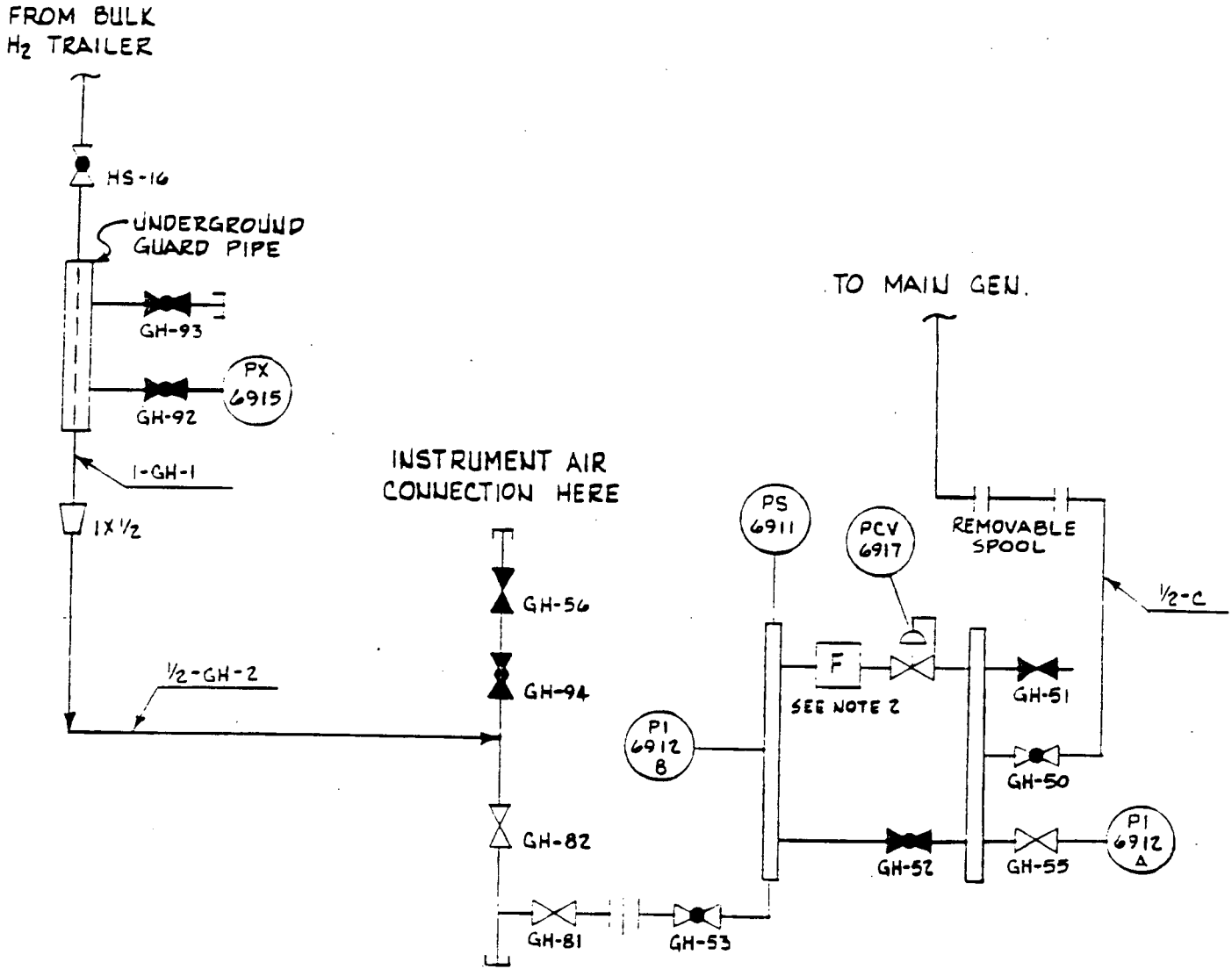

10.1 Gas Cylinder Missiles

Recommendation

Provide protection to prevent unacceptable damage to safety-related equipment from portable gas cylinder missiles.

Basis for Recommendation

1. Portable gas cylinders are susceptible to damage that can cause them to become missiles (Sects. 4.1 and 4.4).
2. Considerable energy is available to propel the missiles (Sect. 4.2).
3. Accidents involving portable gas cylinder missiles have occurred (Sect. 5.1).
4. Nuclear plants contacted indicated that portable gas cylinders can be used anywhere in the plant (Sect. 8.1).
5. Adequate protection from portable gas cylinder missiles is not provided for redundant safety channels (Sect. 9.1).
6. Some plants have not analyzed the effect of portable gas cylinder missiles on safety equipment (Sect. 8.1).

10.2 Hydrogen Explosions

Recommendation

Provide protection to prevent an explosion and/or fire from the rapid release of hydrogen in areas containing safety-related equipment or in other areas if unacceptable damage to safety equipment could occur.

Basis for Recommendation

1. Hydrogen lines are routed through the auxiliary building and some are susceptible to damage from heavy equipment (Sects. 7.2 and 8.3).
2. At one plant, no means have been provided to prevent a rapid release of large amounts of hydrogen in case of a line break (Sect. 8.3).
3. Numerous hydrogen explosions have occurred at industrial and nuclear plants causing extensive damage (Sect. 5.4).

10.3 Identification of Lines and Tanks

Recommendation

Provide easily recognizable identification of all high-pressure gas lines and tanks as well as those containing especially hazardous gases such as hydrogen or chlorine, even at low pressures.

Basis for Recommendation

1. A misidentification could cause a hazardous condition.
2. Some plants have inadequately identified pipes and tanks. Whereas some nuclear plants have voluntarily provided identification (Sect. 7.6) and this is often done in nonnuclear plants.
3. Although not a justification, the cost of identification should be relatively small.

AEOD ENGINEERING EVALUATION REPORT

UNIT: H. B. Robinson 2
DOCKET NO.: 50-261
LICENSEE: Carolina Power and Light Co.
NSSS/AE: Westinghouse/Ebasco

EE REPORT NO.: AEOD/E902
DATE: March 31, 1989
EVALUATOR/CONTACT: H. L. Ornstein

SUBJECT: FIRES AND EXPLOSIVE MIXTURES RESULTED FROM INTRODUCTION OF HYDROGEN INTO PLANT AIR SYSTEMS

EVENT DATE: January 6 and 7, 1989

SUMMARY

In attempting to perform testing on the plant's main generator, maintenance personnel connected the plant's bulk hydrogen system to an instrument air header. As a result, for about four hours hydrogen entered the instrument and station air systems. During that time period, there were two fires in the turbine building.

Subsequently, samples taken from the air systems' piping in the reactor auxiliary building had hydrogen concentrations as high as one and a half times the lower explosive limit (8% hydrogen). Samples taken from open spaces of the reactor auxiliary building were not found to contain hydrogen (References 1, 2, 3, and 4).

The primary safety concern is that improper use of combustible or explosive gases, hydrogen in particular, can create significant hazards which have not been considered in the plant design, and can cause degradation or destruction of safety-related equipment in a manner not considered in the plant safety analyses. In addition, the introduction of hydrogen into plant air systems can create potential dangers to plant personnel.

It is suggested that the NRC program offices consider the January 1989 hydrogen intrusion event at the H. B. Robinson 2 plant, the additional events listed in this engineering evaluation report, and AEOD's previous recommendations on the use of pressurized gases (AEOD Case study report C501, NUREG/CR-3441, Reference 5) in the resolution of Generic Issue 106," "Piping and the Use of Highly Combustible Gases in Vital Areas."

DISCUSSION

Event Description

On January 6, 1988, after extensive maintenance was done on the plant turbine and main generator, licensee maintenance personnel inadvertently connected the plant's bulk hydrogen system to the plant's instrument air system. A temporary connection had been made to supply air to the main generator to perform an air leakage test of the main generator. The connection was made without the benefit of specific procedures. Furthermore, the personnel performing the hydrogen gas lineup did not refer to plant system drawings.

One tube from the bulk hydrogen supply system was connected directly to the instrument air system (See Figure 1). The bulk hydrogen supply tank was half empty at the time and it contained approximately 10,000 standard cubic feet of hydrogen. Because the hydrogen pressure was greater than the instrument air system pressure (120 psi vs. 95 psi), hydrogen entered the instrument air system. At the time of this event the station air compressor was out of service, and the instrument air system was cross-connected with the station air system in order to feed the station air system. As a result, hydrogen gas entered both the instrument and station air systems.

During the four-hour period that the bulk hydrogen supply was connected to the instrument and station air systems, two hydrogen fires occurred inside the turbine building. One fire took place in a box near the moisture separator reheaters, and the other fire took place at the discharge of an air-operated grinder.

Subsequent to the second fire and the discovery of the hydrogen intrusion, the air lines were isolated, work which could cause sparking was stopped, use of the air systems was suspended, and the air piping was sampled and purged.

Samples taken from the air systems in the turbine building and in the reactor auxiliary building indicated that hydrogen concentrations as high as 50% greater than the lower explosive limit were present in the air lines in the reactor auxiliary building.

Samples taken from the open areas of the reactor auxiliary building did not contain any hydrogen.

The event occurred at the end of an outage (the plant was shutdown, preparations were being made to return to power, the primary system was full and the reactor head bolts had been tensioned).

Other Operating Experience

A list of 8 other events involving combustible or explosive mixtures, at nuclear power plants is shown below. Except for the 1989 event at Byron 2, all the events were found by a quick search of the LER SCSS database.

Plant	Date	Description of Event
Byron 2	1/16/89	During a refueling outage there was a hydrogen detonation in a safety injection accumulator. A grab sample indicated that initially there was a hydrogen concentration of 7.6%.
San Onofre 1	7/17/81	Detonation in a waste gas decay tank. Back leakage of air into the nitrogen system provided oxygen as a cover gas which resulted in a flammable mixture.

Salem 1	4/25/86	High oxygen concentration in a waste gas decay tank (no ignition).
Salem 1	12/27/87	High oxygen concentration in a waste gas decay tank (no ignition).
Zion 1	1/6/87	Explosive mixture of hydrogen and oxygen in 3 holdup tanks inside the auxiliary building (no ignition).
Grand Gulf 1	2/27/88	Hydrogen ignition in the off-gas system resulted in charcoal adsorber bed fires.
Perry 1	6/30/87	A generator failure resulted in excessive hydrogen concentration in a generator compartment (no ignition).
Byron 1	7/11/85	Explosive mixture of hydrogen and oxygen in a waste gas decay tank (no ignition).

FINDINGS AND CONCLUSIONS

The January 1989 event at the H. B. Robinson 2 plant, and many of the other events noted above exemplify the fact that greater attention needs to be paid to combustible/explosive gases at nuclear power plants.

The primary safety concern is that improper use of combustible or explosive gases, hydrogen in particular, can create significant hazards which have not been considered in the plant design, and can cause degradation or destruction of safety-related equipment in a manner not considered in the plant safety analyses. In addition, the introduction of hydrogen into plant air systems can create potential dangers to plant personnel.

A previous AEOD case study, C501: NUREG/CR-3551 (Reference 5) has raised these issues, and has provided recommendations on the subject (see enclosure 1). NRC's Office of Nuclear Regulatory Research (RES) is addressing the use of hydrogen gas in nuclear power plants as part of Generic Issue 106, "Piping and the Use of Highly Combustible Gases in Vital Areas," which has received a medium priority. In addition, the Office of Nuclear Reactor Regulation (NRR) has issued an Information Notice on the subject of hydrogen leakage problems (Reference 6).

AEOD suggests that:

1. RES/NRR consider the aforementioned events in the resolution of AEOD's C501 recommendations, and in the resolution of Generic Issue 106, "Piping and the Use of Highly Combustible Gases in Vital Areas," and

2. NRR issue an information notice informing the licensees of the hydrogen gas intrusion event which occurred at the H. B. Robinson 2 plant.

REFERENCES

1. Carolina Power and Light Company, Licensee Event Report (LER) 50-261/89-001, H. B. Robinson Plant, Unit 2, dated February 3, 1989.

2. U.S. Nuclear Regulatory Commission, Daily Report, Region II, January 9, 1989.

3. U.S. Nuclear Regulatory Commission 10 CFR 50.72 Report, Event Number 14435, dated January 7, 1989.

4. Telephone Discussion between H. L. Ornstein and L. Garner, NRC Senior Resident Inspector at H. B. Robinson-2, dated March 15, 1989.

5. U.S. Nuclear Regulatory Commission, "Safety Implications Associated with In-Plant Pressurized Gas Storage and Distribution Systems in Nuclear Power Plants," NUREG/CR-3551, AEOD Case Study C501, dated May 1985.

6. U.S. Nuclear Regulatory Commission, Information Notice No. 87-20, "Hydrogen Leak in Auxiliary Building," April 20, 1987.

FIGURE 1

H. B. ROBINSON 2 HYDROGEN AND AIR SYSTEMS

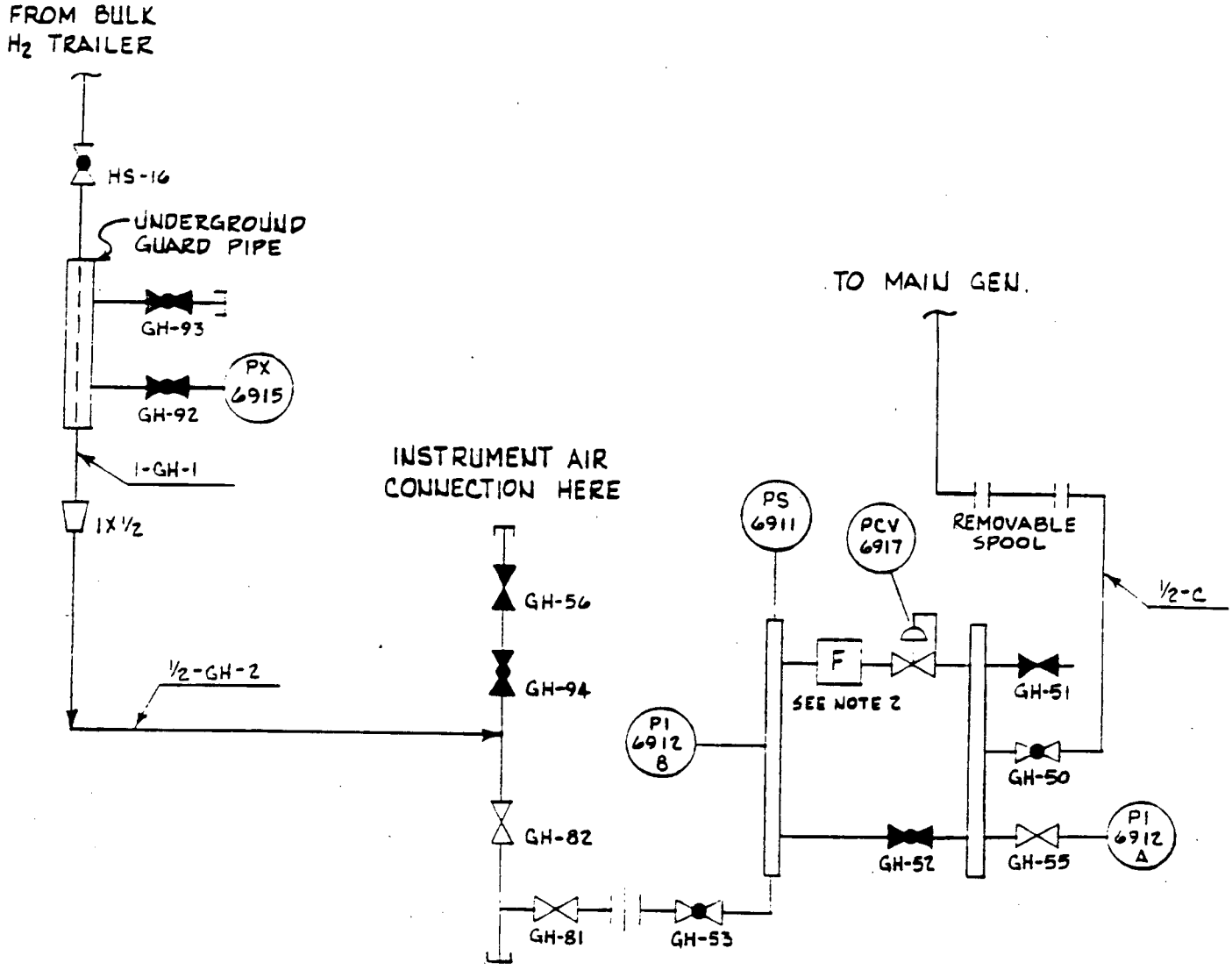

10.1 Gas Cylinder Missiles

Recommendation

Provide protection to prevent unacceptable damage to safety-related equipment from portable gas cylinder missiles.

Basis for Recommendation

1. Portable gas cylinders are susceptible to damage that can cause them to become missiles (Sects. 4.1 and 4.4).
2. Considerable energy is available to propel the missiles (Sect. 4.2).
3. Accidents involving portable gas cylinder missiles have occurred (Sect. 5.1).
4. Nuclear plants contacted indicated that portable gas cylinders can be used anywhere in the plant (Sect. 8.1).
5. Adequate protection from portable gas cylinder missiles is not provided for redundant safety channels (Sect. 9.1).
6. Some plants have not analyzed the effect of portable gas cylinder missiles on safety equipment (Sect. 8.1).

10.2 Hydrogen Explosions

Recommendation

Provide protection to prevent an explosion and/or fire from the rapid release of hydrogen in areas containing safety-related equipment or in other areas if unacceptable damage to safety equipment could occur.

Basis for Recommendation

1. Hydrogen lines are routed through the auxiliary building and some are susceptible to damage from heavy equipment (Sects. 7.2 and 8.3).
2. At one plant, no means have been provided to prevent a rapid release of large amounts of hydrogen in case of a line break (Sect. 8.3).
3. Numerous hydrogen explosions have occurred at industrial and nuclear plants causing extensive damage (Sect. 5.4).

10.3 Identification of Lines and Tanks

Recommendation

Provide easily recognizable identification of all high-pressure gas lines and tanks as well as those containing especially hazardous gases such as hydrogen or chlorine, even at low pressures.

Basis for Recommendation

1. A misidentification could cause a hazardous condition.
2. Some plants have inadequately identified pipes and tanks. Whereas some nuclear plants have voluntarily provided identification (Sect. 7.6) and this is often done in nonnuclear plants.
3. Although not a justification, the cost of identification should be relatively small.