ATTACHMENT 3

Revision No. 1

H. B. ROBINSON UNIT NO. 2

STEAM GENERATOR REPAIR REPORT

H. B. Robinson Unit No. 2

Steam Generator Repair Report

Effective Page List

Page	Revision	Page	Revision
Cover Sheet	0	16	0
i	0	17	0
ii	0	18	0
iii	0	19	0
iv	0	20	0
v	0	21	1
vi	0	22	1
vii	1	23	1
1	0	24	1
2	1	25	1
3	1	26	1
3a	1	27	1
4	1	28	1
5	0	29	1
6	0	30	1
7	0	31	1
8	0	32	1
9	1	32a	1
10	0	33	1
11	1	34	0
12	0	35	1
13	0	36	0
14	0	37	1
15	0	38	0

Page	Revision	Page	Revision
39	0	65	0
40	1	66	0
41	0	67	0
42	0	67a	0
43	0	68	1
44	1	69	0
45	0	Fig. 3.0-1	0
46	0	Fig. 3.0-2	1
47	0	72	1
48	1	Fig. 3.0-4	1
49	0	Fig. 3.0-5	1
50	0	Fig. 3.0-6	1
51	1	Fig. 3.1-1	1
52	1	Fig. 3.1-2	1
53	0	Fig. 3.1-3	0
54	0	Fig. 3.2-0	0
55	1	Fig. 3.4-1	0
55a	1	Fig. 3.4-2	0
56	0	81	0
57	0	82	0
58	0	83	1
59	0	84	0
60	0	85	0
61	1	86	0
62	0	87	0
63	0	88	0
64	0	89	1
		90	1

Page	Revision
91	1
92	0
93	0
94	0
95	0
96	1
97	1
97a	1
98	0
99	1
100	1

H. B. ROBINSON UNIT NO. 2

STEAM GENERATOR REPAIR REPORT

TABLE OF CONTENTS

H. B. ROBINSON UNIT NO. 2

STEAM GENERATOR REPAIR REPORT

TABLE OF CONTENTS (CONT'D)

H. B. ROBINSON UNIT NO. 2

STEAM GENERATOR REPAIR REPORT

TABLE OF CONTENTS (CONT'D)

H. B. ROBINSON UNIT NO. 2

STEAM GENERATOR REPAIR REPORT

TABLE OF CONTENTS (CONT'D)

H. B. ROBINSON UNIT NO. 2

STEAM GENERATOR REPAIR REPORT

TABLE OF CONTENTS (CONT'D)

H. B. ROBINSON UNIT NO. 2

STEAM GENERATOR REPAIR REPORT

LIST OF TABLES

H. B. ROBINSON UNIT NO. 2

STEAM GENERATOR REPAIR REPORT

LIST OF FIGURES

STEAM GENERATOR REPAIR REPORT
H. B. ROBINSON UNIT NO. 2

1.0 INTRODUCTION, SUMMARY, AND CONCLUSIONS

The steam generators at Carolina Power & Light Company's (CP&L) H. B. Robinson Unit No. 2 (HBR2) have experienced corrosion related phenomena that require periodic inspection and plugging of steam generator (SG) tubes to ensure their continued safe operation. At the present time, HBR2 is being operated at reduced power to retard the rate of SG tube degradation. Projections of industry experience and CP&L experience at the Robinson Plant indicate the possibility of increasingly frequent inspection intervals and a permanent reduction of unit power. Therefore, primarily economic considerations require the repair of the steam generators.

Carolina Power & Light Company is currently pursuing procurement, engineering, and licensing activities to enable it to effect a steam generator repair at a time which is contingent on steam generator performance and which ideally would coincide with a refueling outage. At this time the earliest time that repair could take place is during the next refueling outage which is scheduled to begin in February 1984 but which could begin as early as November 1983 depending on several factors.

This report discusses the safety related aspects associated with the repair of the steam generators by replacement of the lower portion (tube bundle) of the existing units with shop fabricated replacement lower assemblies.

Repair of the HBR2 SGs by removal of the lower assemblies through the containment equipment hatch is the preferred method. Implementation of the repair will be accomplished by removing the upper steam dome assembly by cutting the SG at the top of the transition cone, and by cutting the channel head just below the tubesheet. The section removed from the steam generators, which includes the tubesheet, tube bundle and shell, and transition cone, will be capped at both ends and removed from the containment. A new lower assembly will be shop fabricated and delivered to the site ready for installation onto the channel head, after which the original steam dome and steam separator section will be reinstalled onto the new tube bundle section.

The replacement method described has been selected as being the most appropriate for the H. B. Robinson steam generator support arrangement after extensive review of the methods used at the Surry Plant (Reactor Coolant Pipe Cut Approach) and the Turkey Point Plant (Channel Head Cut Approach). Our evaluation has shown that the method chosen will result in the least personnel exposure and outage time of the two methods. In making this evaluation, we have taken advantage of prior experience of others. Industry experience has shown that either method is viable from a technical standpoint; however, CP&L has the advantage of being able to study the experience of others in selecting its detailed methods. This should benefit us in maintaining radiation exposure as low as reasonably achievable (ALARA).

1.1 SUMMARY OF STEAM GENERATOR REPAIR PROGRAM

1.1.1 CONTAINMENT ENTRY AND EXIT OF STEAM GENERATOR LOWER ASSEMBLIES

A 1/2" to 1'0" scale model of the portions of the containment building which will be involved in the steam generator replacement project has been constructed for planning purposes, to assist in laydown studies of the steam generator components and to provide a tool for studying rigging and handling methods for the components themselves. The model includes the full operating deck, with major components which will be disturbed during the steam generator work, and the equipment hatch and head storage cavity areas through which the replacement bundles will travel. It also includes the upper lateral restraint for one of the generators, which is typical for all three generators.

The Robinson containment is fitted with an equipment hatch which provides ample dimensions (18' -0" diameter) through which to pass the steam generator components. The existing polar crane can be upgraded to have sufficient capacity to handle the replacement sections and other components. In view of these two facts, it was recognized that alternate pathways, such as a temporary opening in the containment dome, offered no advantage. Therefore, CP&L plans are to proceed using the existing containment openings and equipment. Procedures for equipment handling similar to those used during original plant construction are being considered for this effort. Construction-related evaluations addressed herein cover the equipment hatch pathway only.

1.1.2 STEAM GENERATOR LOWER ASSEMBLY CHARACTERISTICS

The existing steam generators will be parted in the upper section of the shell and at the channel head. The steam dome assemblies (upper portion of steam generator) will be removed. Subsequent to completion of the installation of the new lower assemblies, the original steam dome assemblies will be welded to the new lower assemblies to complete the repair. 1

The shop fabricated lower assemblies (see Figure 2.2-1) will be equivalent to the lower assemblies they replace. They will be designed to meet existing plant mechanical and performance characteristics, and safety-related parameters will remain consistent with those utilized in the FSAR and subsequent analyses.

Features to mitigate the effects of corrosion-related phenomena are incorporated in the design. These features will not adversely alter mechanical performance or FSAR-related characteristics. In addition, the shop fabricated lower assemblies will be manufactured utilizing current codes and manufacturing techniques. Thus, the replacement assemblies will reflect current technology. They will satisfy the licensing requirement of being equivalent to the units they replace (which were manufactured to the 1965 Edition of Section III, through the Summer 1966 addenda, ASME Boiler and Pressure Vessel Code).

1.1.3 SAFETY-RELATED CONSIDERATIONS

The potential impact of the repaired units on each appropriate accident analyzed in the FSAR has been evaluated. Because of the essential equivalence of safety-related parameters, qualitative discussion is sufficient to demonstrate the appropriateness of the repaired steam generators to accommodate FSAR accidents.

On-site transportation and handling of the lower assemblies have been evaluated as discussed in Sections 3.0 and 5.0. Due to the site arrangement and methods to be used when handling and transporting the steam generator components, temporary protection of underground facilities, safety related equipment and class I structures may not be required. Where underground facilities are located that require protection, appropriate administrative procedures will be followed and/or protective devices installed. The following construction incidents have been postulated: 1

a) failure of external lifting equipment and subsequent load drop,

b) uncontrolled movement of steam generator transport equipment, and

c) overturning of transport equipment.

The ability of the plant to accommodate any such events is discussed in Section 5.2.

To obviate the need to evaluate in detail construction incidents within the containment during the steam generator repair, the reactor core will be offloaded and transferred to the fuel storage building prior to commencement of major repair activities within the containment.

1.1.4 ALARA CONSIDERATIONS

Comparison of the estimates of man-rem required to complete the steam generator replacement with the man-rem expended during steam generator eddy current testing and repair indicates that an overall reduction of man-rem should be achieved over a period of nine years of operation. 1

1.1.5 OFFSITE RADIOLOGICAL CONSIDERATIONS

Evaluations of projected liquid and gaseous releases generated by the steam generator replacement project indicate that these releases should be less than those during comparable periods of normal operations. After replacement, normal releases should be reduced as a result of enhanced generator integrity. 1

1.1.6 UNIQUE ASPECTS OF THE PROGRAM

The shop fabrication of the lower assemblies will be conducted in accordance with standard practices. Welding of the steam dome assembly to the lower assembly in the field was utilized in the installation of the existing steam generators, which were shipped in two sections. This process will be repeated. Concrete removal and replacement will be accomplished utilizing standard construction practices. Transport and lifts of heavy vessels, as well as other heavy loads well in excess of the weight of the lower assemblies, are commonplace during construction of power plants. The heavy

loads will be transported along existing trackage to the lower assembly storage area. A heavy duty trailer will be used to transport the lower assemblies from the storage area to the equipment hatch service platform as shown on Figure 3.1-1. 1

Handling of the heavy loads inside the containment will use existing equipment and pathways similar to those used during initial plant construction. In summary, the repair program will utilize tried and proven manufacturing and construction practices. 1

1.1.7 STEAM GENERATOR DISPOSAL

The repair activity and ultimate disposal of the existing lower assemblies are separable issues. This report discusses the various means by which the steam generators can be disposed of to demonstrate the feasibility of disposal. Several disposal options were investigated. The method chosen considered both economic and radiological considerations. The lower assemblies will be stored on site in a temporary storage facility until decommissioning or until the difficulties of shipment to a burial facility are diminished making this option feasible. 1

1.2 IDENTIFICATION OF PRINCIPAL AGENTS AND CONTRACTORS

Carolina Power & Light Company is a public utility corporation duly authorized and existing under the laws of the state of North Carolina. Carolina Power & Light Company is the sole owner and operator of the H. B. Robinson Plant.

Carolina Power & Light Company has developed the engineering and construction management capability to engineer and direct a project of this magnitude and will exercise that prerogative. Assistance in engineering will be obtained from Ebasco Services Incorporated, who performed as the architect-engineer and constructor for the original plant. Selected assistance from other consultants may be employed as needed. The construction will be directed by CP&L utilizing a composite work force of CP&L construction craftsmen, contractor craftsmen, and selected specialty contractors who have proven expertise in certain phases of the work.

Westinghouse Electric Corporation manufactured the existing steam generators and will provide the replacement steam generator lower assemblies. Their expertise will be utilized as appropriate to assist in developing the engineering and construction procedures and in providing site support during the replacement effort.

1.3 OTHER CONSIDERATIONS

Repair or replacement of equipment at a power plant, performed in accordance with appropriate procedures, is a maintenance activity that is routinely conducted. Because of the scope of the steam generator repair, it was considered prudent to evaluate this activity to determine:

a) If the probability of occurence or the consequences of an accident or malfunction of equipment important to safety previously evaluated in the safety analysis report may be increased; or

b) If a possibility for an accident or malfunction of a different type than any evaluated previously in the safety analysis report may be created; or

c) If the margin of safety as defined in the basis for any technical specification is reduced.

Each FSAR accident analysis has been evaluated to determine if the parameters of the repaired steam generators would alter the conclusions reached in the FSAR. Additionally, the construction incident potential has been evaluated to determine the presence of any new or unique accidents.

1.4 CONCLUSIONS

The fundamental conclusions reached are that the steam generator repair can be conducted using proven manufacturing and construction techniques and that the repair program does not result in any adverse impact to the health and safety of the public. Additionally, current FSAR safety analyses are applicable to the repaired steam generators. The detailed bases supporting these conclusions are provided in this report.

2.0 REPLACEMENT COMPONENT DESIGN AND OTHER PLANT SYSTEM MODIFICATIONS

Westinghouse will shop fabricate new steam generator lower assemblies (Figure 2.2-1). The design of the lower assemblies will be consistent with the design performance of the lower assemblies being replaced. However, several design features that do not alter mechanical, performance and FSAR parameters are included in the new lower assembly design. These design features will provide better flow distribution, provide additional tube bundle access and minimize the potential for secondary side corrosion. This section of the report discusses the design and manufacturing of the lower assemblies.

2.1 GENERAL DESCRIPTION

The functional requirements of each steam generator will remain the same as those reported in the FSAR and are summarized below.

Each loop of the Reactor Coolant System contains a vertically mounted U-tube steam generator. These generators consist of two integral sections: an evaporator section and a steam drum section. The evaporator section consists of a U-tube heat exchanger while the steam drum section is located in the upper part of the steam generator. The pressure boundary components of the generators are designed and manufactured in accordance with applicable portions of Sections II, III, and IX of the ASME Boiler and Pressure Vessel Code.

High pressure and high temperature reactor coolant flows into the channel head, through the Inconel U-tubes, and back to the channel head. A partition plate divides the channel head into inlet and outlet sections. An access opening for inspection and maintenance is provided in each section of the channel head. Welding of the U-tubes to the tubesheet ensures zero leakage across the tube joints. The tubes are supported at intervals by horizontal support plates.

Feedwater enters the steam generator through a nozzle located on the upper shell and is distributed by a feedwater ring into the "downcomer" annulus formed by the tube bundle wrapper and steam generator shell. The feedwater mixes with recirculation flow and enters the tube bundle near the tube sheet. Boiling occurs as the water flow rises in the tube bundle.

A set of centrifugal moisture-separators, located above the tube bundle, removes most of the entrained water from the steam. Steam dryers are employed to produce steam with a minimum quality of 99.75 percent (0.25 percent moisture).

The steam drum has a bolted and gasketed access opening for inspection and maintenance of the dryers which can be disassembled and removed through the opening.

All pressure-containing parts, with the exception of the Inconel tubes, are made of carbon or low alloy steel. All surfaces in contact with the reactor primary coolant are made of, or clad with, stainless steel or Inconel.

All Volatile Treatment (AVT) will be used as the method of secondary system chemistry control. This method of treatment is the preferred method based on

operating experience at approximately seventy operating stations. Inspections of steam generators using AVT have yielded data which demonstrates its effectiveness with respect to tube cracking, thinning, and denting.

2.2 SCOPE OF MODIFIED DESIGN

The modified model 44F steam generator will be equivalent to the design performance of the originally installed model 44 steam generator; however, many design modifications are incorporated to provide better flow distribution, provide additional bundle access, minimize the potential for secondary side corrosion, and facilitate maintenance and inservice inspection activities. The replacement lower assembly, shown schematically in Figure 2.2-1, includes the following features:

a) The tubesheet will be of the same dimensions as the existing tubesheet, except for the weld prep lips, which will be prepared for field welding to the existing channel head. Flush tube-to-tubesheet welds will be used in conjunction with full depth expansion for all tubes; see Figure 2.2-2.

b) Four 6-inch handholes will be placed in the secondary shell just above the tubesheet-to-shell weld seam. These handholes are spaced 90 degrees apart, with two to be located on the tube lane.

c) One 3-inch port is located on the lower shell transition cone at the tube lane to provide for inspection of the top support plate and the tubing U-bend areas.

d) Two additional 6-inch handholes will be placed in the lower shell barrel just above the flow distribution baffle. These openings will be 180 degrees apart and on the tube lane.

e) The wrapper will be similar to the original wrapper except for modification at the bottom edge and use of wrapper support blocks.

f) A tube lane blocking device is installed to limit tube bundle bypass flow. Its design will be such that it does not hamper sludge lancing.

g) A flow distribution baffle will be placed approximately 23 inches above the tubesheet. The baffle will be made of ferritic stainless steel (as will all of the tube support plates) and will have drilled tube holes with a center cut-out; see Figure 2.2-3. The purpose of this baffle will be to direct the recirculation water across the tubesheet to the center of the bundle. Here sludge is expected to be deposited in a limited region near the blowdown intake.

h) The tube support plates have a broached hole pattern using the quatrefoil design; see Figure 2.2-4. This design also directs the flow to the tubes which will limit steam formation and chemical concentrations at the tube-to-tube support plate intersection. The tube support plate material will be ferritic stainless steel, which is more resistant to corrosion than carbon steel.

i) The Inconel-600 tubes will be thermally treated. The tube dimensions are 7/8 inch O.D with 0.05 inch wall thickness, which are identical to the

dimensions of present tubing. Additionally, the small radius tubes, Rows 1 through 8, are stress relieved after bending to further reduce the potential for cracking.

j) Increased blowdown capacity will be provided to enhance secondary side chemistry control.

k) A wet layup nozzle for the upper shell, designed for a 2-inch pipe connection, may be installed. This nozzle could be used in conjunction with the blowdown system to minimize localized chemical concentrations during periods of wet layup. These same connections may be used for chemical cleaning.

l) The wrapper transition cone shall have a welding ring for fit-up to the existing primary swirl vane transition assembly which shall be reused.

m) A feedring will be installed and have J-tubes distributed so as to direct a larger amount of incoming feedwater to the hot leg side of the tube bundle. This distribution has the effect of suppressing hot leg boiling. The combination of J-tubes and welded feedwater nozzle connection should reduce the potential of water hammer.

n) The new feedwater distribution ring will be supported to allow a welded connection to the feedwater nozzle. This welded connection will limit feedring drainage when the water level is allowed to drop below the ring.

o) The tubesheet will be marked to allow quick identification of tube locations.

p) The peripheral stayrods will be relocated and additional ones added to the interior of the tube pattern.

q) The modified steam generator will allow the use of an efficient sludge removal system. It is not planned to install a permanent sludge removal system.

2.3 COMPARISON WITH EXISTING COMPONENT DESIGN

2.3.1 PARAMETRIC COMPARISON

The replacement steam generators for HBR2 have been designed with the objective of having physical, mechanical and thermal characteristics consistent with the original design and safety analysis as currently documented in the FSAR. The existing steam generators were built to the 1965 Edition of the ASME Boiler and Pressure Vessel Code (ASME Code). The new component parts of the steam generators will be fabricated based upon the 1980 Edition of the ASME Code, including all addenda through Winter 1980. The Stress Report will be based upon the 1965 Edition of the ASME Code, including all addenda through Summer 1966. The replacement lower assemblies will be fabricated and analyzed to standards equivalent to or more current than the original units.

The replacement lower assembly will incorporate design modifications which are discussed in detail in Section 2.4. Several modifications were made to the

installed steam generators to provide additional performance and reliability. The modifications previously accomplished consisted of removing the downcomer resistance plate, modifying the moisture separators, modifying the blowdown arrangement inside the steam generators, installing tube lane blocking devices and modifying the feedring to provide improved performance. These modifications increased the circulation ratio and helped the units to resist sludge buildup. 1

Design data for the steam generators is presented in Table 2.3-1 allowing comparison between the original steam generators and the replacement units. The thermal data for each steam generator will remain the same as the original steam generators. Increased access to the secondary side of the steam generators has been made. The original two 6-inch handholes have been increased to six 6-inch handholes around the bundle in the tubesheet area.

Since the replacement lower assemblies have been designed to incorporate changes based on field experience, a number of minor changes in specific components have been made which could affect the thermal hydraulic performance of the unit. In order to maintain the original thermal and hydraulic conditions, adjustment of heat transfer surface parameters was necessary. Changes in the support plate configuration and the flow distribution resulted in a decrease in the number of tubes from 3260 to 3214.

Most materials used in the fabrication of the replacement lower assemblies will be procured to the requirements of the 1980 Edition of the ASME Code, including the addenda through Winter 1980. These materials will be essentially equivalent to those used in the original steam generators except where specific design changes have been incorporated or fabrication processes have changed. Specific examples of these are as follows: plate material used in the secondary shell has been changed to SA-533 Grade A Class 2 from SA302 Grade B Class 1; support plate material has been changed to SA-240 Type 405 from SA-285 Grade C. Further discussion is provided in Section 2.4, and Table 2.3-2 enumerates past and present applications of materials.

2.3.2 PHYSICAL COMPATIBILITY WITH EXISTING STEAM GENERATORS AND SYSTEMS

New steam generator lower assemblies (see Figure 2.2-1) will be provided. These lower assemblies are designed to be essentially equivalent physical replacements for the existing units. Outside overall dimensions will be the same after lower assembly fitup with the existing channel head and upper shell as will be the location of support attachments. Interfaces between the steam generators and plant components and systems will be maintained. Dry and wet weights of the steam generators will remain approximately the same as will the center of gravity; therefore, no changes to present supports or their configuration are believed necessary.

2.3.3 ASME CODE APPLICATION

The original steam generators were designed and fabricated to the requirements of the 1965 Edition of the ASME Code, Section III including all addenda through Summer 1966. The replacement lower assemblies will be fabricated to the requirements of the 1980 Edition of the ASME Code including all addenda through Winter 1980. Design of the steam generators will be consistent with the original design of the reactor coolant system as well as the upper shell

assembly of the steam generators which will not be replaced. Materials to be used in fabrication will be procured to the requirements of current codes to facilitate fabrication. Material certification tests will be performed and recorded as required by current versions of the code. None of the requirements imposed on the replacement lower assemblies will inhibit the capability of the steam generators to meet performance and FSAR safety requirements.

2.4 COMPONENT DESIGN IMPROVEMENTS

2.4.1 DESIGN REQUIREMENTS TO MINIMIZE POTENTIAL FOR CORROSION

2.4.1.1 Flow Distribution Baffle

A flow distribution baffle, located approximately 23 inches above the tubesheet, has a cut-out center section and oversized drilled tube holes. The design of the cut-out and baffle plate height above the tubesheet face provides a greater lateral flow across the tubesheet surface than the original units. The baffle plate directs this flow across the tubesheet then up the center of the bundle through the center cut-out. The design is sized to minimize the number of tubes exposed to sludge. Consistent with this purpose, the design causes the sludge to deposit in and near the center of the bundle at the blowdown intake. The flow distribution baffle plate material is ferritic stainless steel. Figure 2.2-3 illustrates the flow distribution baffle.

While the baffle will direct flow toward the center of bundle, the average velocity around the tubes should inhibit sludge from settling. In addition, as noted, access holes have been provided to allow sludge lancing of the baffle plate.

2.4.1.2 Improved Internal Blowdown Design

Each steam generator will be designed to have two 2-inch internal blowdown pipes. The blowdown rate from each steam generator is varied as required by chemistry conditions in the feedwater and as monitored in the blowdown. Continuous blowdown of the steam generator provides a mechanism for constantly removing impurities from the secondary water system and steam generators.

The internal blowdown location is coordinated with the baffle plate design so that the maximum intake is located where the greatest amount of sludge is expected to deposit. The modified blowdown system is designed to have a higher capacity than the present blowdown system.

2.4.1.3 Tube Expansion in Tubesheet

Following insertion into the tubesheet hole, tack rolling, welding and gas leak testing, the tubes are expanded to the full depth of the tubesheet hole. Full-depth expansion minimizes the potential for crevice boiling. In addition it reduces the potential for a buildup of impurities forming in the crevice region. The original steam generator tubes were partially expanded in the tubesheet.

2.4.1.4 Thermally Treated Inconel 600 Tubing

Research by Westinghouse has determined that additional resistance to the stress corrosion of Inconel 600 tubing can be achieved by modification of the metallurgical structure through thermal treatment. The primary objective of this treatment is to develop a metallurgical microstructure, associated with grain boundary precipitation, which provides additional margin against stress corrosion cracking. Several benefits result from this treatment such as additional resistance to stress corrosion cracking in NaOH, resistance to intergranular attack in oxygenated environments, resistance to intergranular attack in sulphur-containing species and reduction of residual stress imparted by tube processing. |1

Studies conducted at Westinghouse and elsewhere have indicated that certain heat treatments can provide additional caustic stress corrosion resistance but result in a chromium-depleted grain boundary layer (sensitization) which is not as resistant to off-chemistry environments. However, analysis of available data also indicates that there is a broad band of temperature and time within the typical sensitization range for Inconel 600 which provides additional resistance to stress corrosion cracking in both caustic and pure water environments. Thermal treatment in this time-temperature band avoids formation of the chromium depleted grain boundary layer. The thermal treatment to be used will be within this time-temperature band.

2.4.1.5 Offset Feedwater Distribution

Feedwater flow within the steam generator is modified so that approximately 80 percent of the flow is directed to the hot leg side of the bundle and the remaining 20 percent of the flow is directed to the cold leg side of the bundle. This reduces the steam quality in the hot leg side of the bundle and raises the steam quality in the cold leg side of the bundle. The effect of these changes in steam quality is to shift the point of highest steam quality at the tubesheet elevation toward the center of the bundle. The point of highest steam quality has the lowest density and is, therefore, a likely region for chemical concentration and sludge deposition. This area is utilized for location of the blowdown intake. Feedwater flow distribution is accomplished by providing a greater number of flow paths on the portion of the feedwater ring which traverses the hot leg side of the tube bundle.

2.4.1.6 Corrosion Resistant Support Plate Material

Corrosion in the crevice between the tube and tube support plate has led to denting of the steam generator tubing in that area. Alternative support plate materials have been evaluated, and SA-240 Type 405 ferritic stainless steel has been selected as an appropriate material for this application. This material is ASME Code-approved and provides additional resistance to corrosion. In addition, SA-240 has a low wear coefficient when paired with Inconel and has a coefficient of thermal expansion similar to carbon steel. Corrosion of SA-240 results in an oxide which has approximately the same volume as the parent material, whereas corrosion of carbon steel results in oxides which have a larger volume than the parent material. In addition to the tube support plates, the baffle plate discussed in Subsection 2.4.1.1 will be constructed of SA-240 Type 405 stainless steel.

2.4.1.7 Quatrefoil Tube Support Plates

The quatrefoil tube support plate design, illustrated by Figure 2.2-4, consists of four flow lobes and four support lands. The lands provide support to the tube during operating conditions, while the lobes allow flow around the tube. The quatrefoil design directs the flow along the tubes to minimize steam formation and chemical concentrations at the tube-to-tube support plate intersections. The quatrefoil support plate design results in higher average velocities along the tubes, minimizing sludge deposition. The combination of higher velocities in the support plate region and corrosion resistant material should minimize the potential for support plate corrosion.

2.4.2 DESIGN REFINEMENTS TO INCREASE PERFORMANCE

In the course of evolution of the steam generator design, as derived from operating experience and ongoing research and development programs, certain modifications and refinements have been incorporated in recent designs to increase performance of thermal hydraulic characteristics. These modifications are included in the Model 44F steam generator design and are discussed below. They do not affect FSAR safety requirements.

2.4.2.1 Flush Tube to Tubesheet Weld

The tubes on the replacement lower assemblies will be flush with the tubesheet holes and then welded to the tubesheet cladding. Elimination of the protruding tube stub of the original design results in lower entry pressure losses and, therefore, a lower pressure drop in the primary loop. In addition, a possible point of radioactive crud buildup is avoided with this design. This is illustrated in Figure 2.2-2.

2.4.2.2 Tube Lane Blocking Device

Recirculating water exiting at the bottom of the wrapper will tend to preferentially channel to the tube lane and bypass part of the tube array. In order to minimize this tube bundle bypass, a series of plates are provided to limit flow in the tube lane. These plates are arrayed so that there will be minimal interference with sludge lancing.

2.4.3 DESIGN CHANGES TO IMPROVE MAINTENANCE AND RELIABILITY

Operational experience, including necessary maintenance and repair, has resulted in certain changes in design which are directed to increasing the maintainability and ultimately the reliability of the units. Other changes have been incorporated concerning operational occurrences which have been experienced. These changes are discussed below. They do not affect the performance or FSAR safety requirements.

2.4.3.1 Access Ports

The lower assemblies will be constructed with additional access ports. Four 6-inch access ports will be located slightly above the tubesheet, approximately 90 degrees apart, with two located on the tube lane. Two 6-inch access ports will be located on the tube lane, between the flow distribution baffle and the first tube support plate. The addition of these access ports

should permit additional inspections of the tubesheet and flow distribution baffle and assist in sludge lancing.

2.4.3.2 Inspection Port

One 3-inch inspection port is located on the lower shell transition cone at an elevation slightly above the top tube support plate of the tube bundle. This port, located on the tube lane centerline, permits inspection of the support plate and the tubing U-bend area.

2.4.3.3 Wet Layup Nozzle

A 2-inch nozzle may be added to the upper shell to facilitate the wet layup of the steam generators during periods of inactivity. The wet layup nozzle can be used for addition of chemicals during these periods to minimize the potential for any excursions of the water quality in the steam generator. The nozzle can also be used in conjunction with other systems to circulate water through the steam generator during periods of layup. Other methods of wet layup will be evaluated before a final decision is reached.

2.5 SHOP TESTS AND INSPECTIONS

The tests and inspections required by the ASME Code, Section III will be conducted during the fabrication of the steam generator lower assembly. In addition to these ASME requirements, further tests and inspections will be conducted at the fabrication facility. After the tube installation into the tube sheet is completed, a gas leak test will be performed to demonstrate the integrity of the tube-to-tubesheet welds.

The ASME Code required pressure tests will be performed in the field after installation of the assemblies.

2.6 OTHER PLANT SUPPORT SYSTEM MODIFICATIONS

A variety of other plant support system modifications will be performed prior to or during the steam generator replacement outage. These projects will increase the operating reliability and flexibility, as well as improve the secondary side's resistance to corrosion, thus, minimizing the potential for future repair efforts. The corrosion product buildup in the steam generators is believed to have been the cause for tube leakage in the generators.

2.6.1 COPPER ALLOY REMOVAL

As originally designed, the secondary system had copper-based alloys throughout. In order to minimize corrosion and minimize the effects copper may have on steam generator tube integrity, most copper-containing components will be replaced prior to starting up the new steam generators. The following equipment will be or has already been replaced during previous outages.

a) Condenser tubes have been replaced with Type 439 stainless steel. This will have two very positive benefits with respect to the secondary-side chemistry. The first is the elimination of copper, and the second is minimizing circulating water inleakage. An integral-groove condenser

tubesheet design of Type 304 stainless steel and condenser tube ball cleaning system will help with maintaining condenser integrity.

b) The Nos. 3, 4, and 6 feedwater heaters have been replaced with stainless steel tubes during previous plant outages. The Nos. 1, 2, and 5 feedwater heaters will be replaced with stainless steel tubes prior to start-up of the new steam generators.

c) The moisture separator reheater tube bundles either have been or will be replaced with stainless steel prior to start-up of the new steam generators.

2.6.2 WATER TREATMENT SYSTEMS AND CHEMISTRY CONTROL

Several modifications are planned for the treatment and processing of the secondary side water inventory. The following briefly outlines the major changes:

a) The existing SG blowdown system will be modified to allow for increased blowdown capacity during startup and other periods of high potential solids concentration if the steam generator chemistry requirements dictate. This increased design capacity will allow for greater operating flexibility.

b) The increased SG blowdown will be accomodated by a modification to increase the capacity of the Make-Up Water Treatment System. The modified system will produce high quality water which will meet all of the primary and secondary water chemistry requirements. This system will consist of deep-bed demineralizers and a degasifier.

c) A steam generator wet layup system may be installed to provide fluid mixing within the generators and to maintain the water quality in the steam generators during an extended plant shutdown.

d) A full-flow condensate polishing demineralizer system consisting of an independent train of mixed-bed demineralizers will be installed. This unit will have an independent chemical regeneration system consisting of a cation regeneration tank, an anion regeneration tank, and a resin mix storage tank. The existing condensate system will be modified to include the necessary piping and valves to place the polishing system into the condensate system flow path. Treatment systems to process regenerants and waste effluent for reuse or disposal, as appropriate, will be added. A building to house the condensate polishing systems, auxiliary systems, motor control centers, and control panels will be constructed.

The major modification to be used to minimize corrosion is changing the control of secondary-side chemistry in the steam generators from phosphate chemistry to All-Volatile Treatment (AVT) chemistry. The use of AVT is based on recommendations from Westinghouse.

All-Volatile Treatment relies on minimizing the corrosion of secondary-side materials of construction and minimizing the introduction of contaminants into the system, and transport of corrosion products and contaminants into the steam generators.

Table 2.3-1

STEAM GENERATOR DESIGN DATA (PER STEAM GENERATOR)

	Original	Replacement
Design Pressure, Reactor Coolant/Steam, psig	2485/1085	N.C.*
Reactor Coolant Hydrostatic Test Pressure (tube side), psig	3106	N.C.
Hydrostatic Test Pressure, Shell Side, psig	1356	N.C.
Design Temperature, Reactor Coolant/Steam °F	650/556	N.C.
Steam Conditions at 100 percent load, Outlet Nozzle:		
Steam Flow, lb per hr	3.37×10^6	N.C.
Steam Temperature, °F	518.2	N.C.
Steam Pressure, psia	800	N.C.
Feedwater Temperature at 100 Percent Load, °F	441.5	N.C.
Overall Height, Ft-in	63-1/6	N.C.
Shell OD, upper/lower, in.	166/127	N.C.
Shell Thickness, upper/lower, in.	3.5/2.62	N.C.
U-tube OD, in.	0.875	N.C.
Tube Wall Thickness, (nominal) in.	0.050	N.C.
Number of Manways/ID, in.	3/16	N.C.
Number of Handholes/ID, in.	2/6	6/6
Number of U-tubes	3260	3214
Tube Length (largest U-bend), in.	397.5	N.C.
Total Heat Transfer Surface Area, ft^2	44,430	43,467
Reactor Coolant Water Volume, ft^3	928	925
Reactor Coolant Flow, lb/hr	33.8×10^6	N.C.
Secondary Side Volume, ft^3	4729	4715
Secondary Side Mass No Load, lbs	134,000	137,000
Secondary Side Mass 100 Percent Power, lbs	92,000	91,000
Center of Gravity (from support pads), ft/in.	25/3.6	N.C.

* No change

Table 2.3-2

STEAM GENERATOR MATERIALS

	Original	Replacement
Plate (shell courses)	SA-302 Grade B Class 1	SA-533 Grade A Class 2
Tube Sheet Forging	SA-336 (Code Case 1332)	SA-508 Class 2a
Channel Head Casting	SA-216 Grade WCB	N.C.*
Support Plates	SA-285 Grade C	SA-240 Type 405
Channel Head Cladding	Stainless Steel, Type 304 or equivalent	Stainless Steel, Type 304 or equivalent
Tube Sheet Cladding	Inconel	Inconel Weld Deposit
Tubes	SB-163-61T (Code Case 1336)	SB-163 Special Thermal Treated (Code Case N-20)

* No change

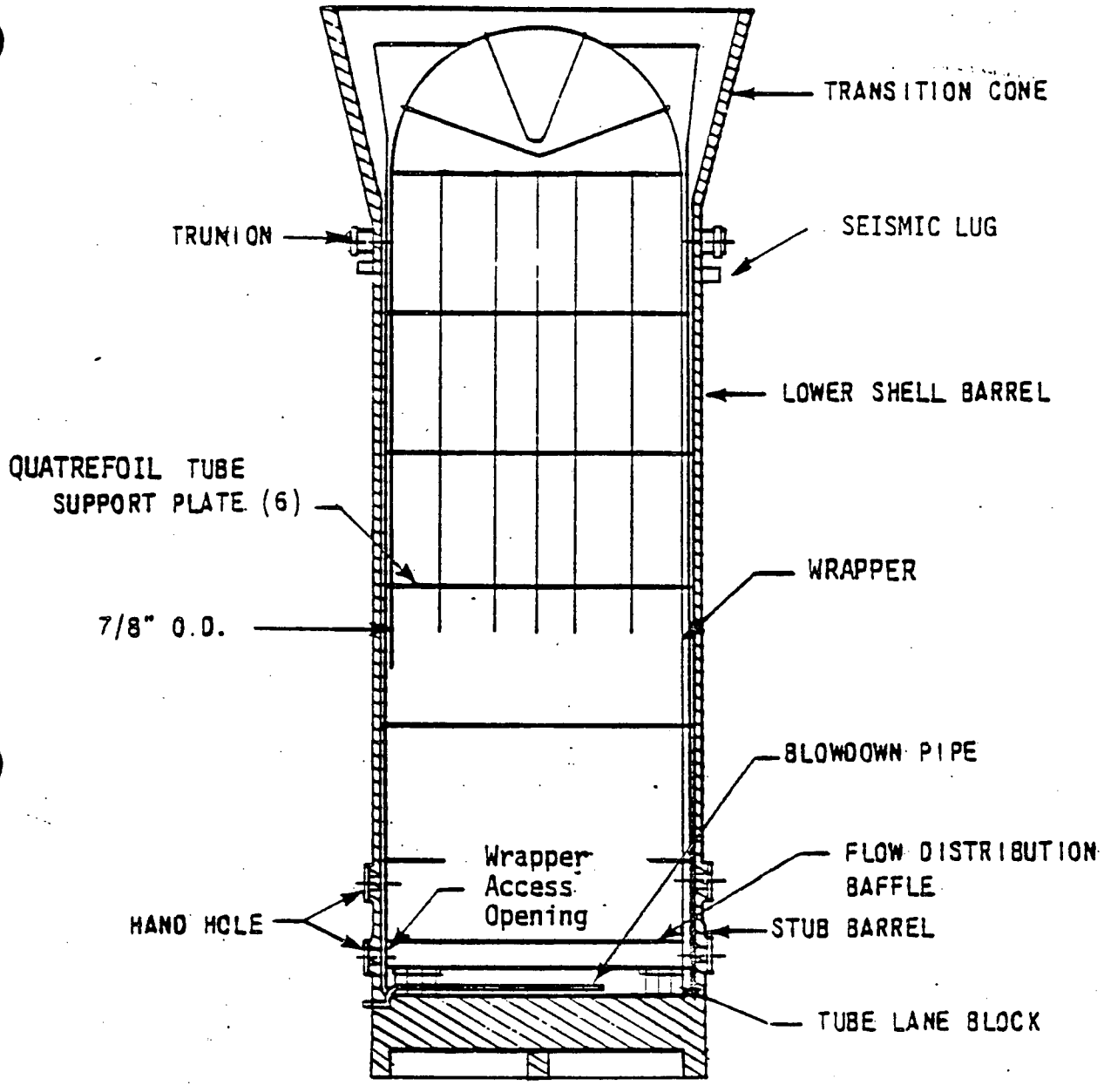

H. B. ROBINSON UNIT NO. 2
STEAM GENERATOR REPAIR REPORT

STEAM GENERATOR LOWER ASSEMBLY

Figure 2.2-1

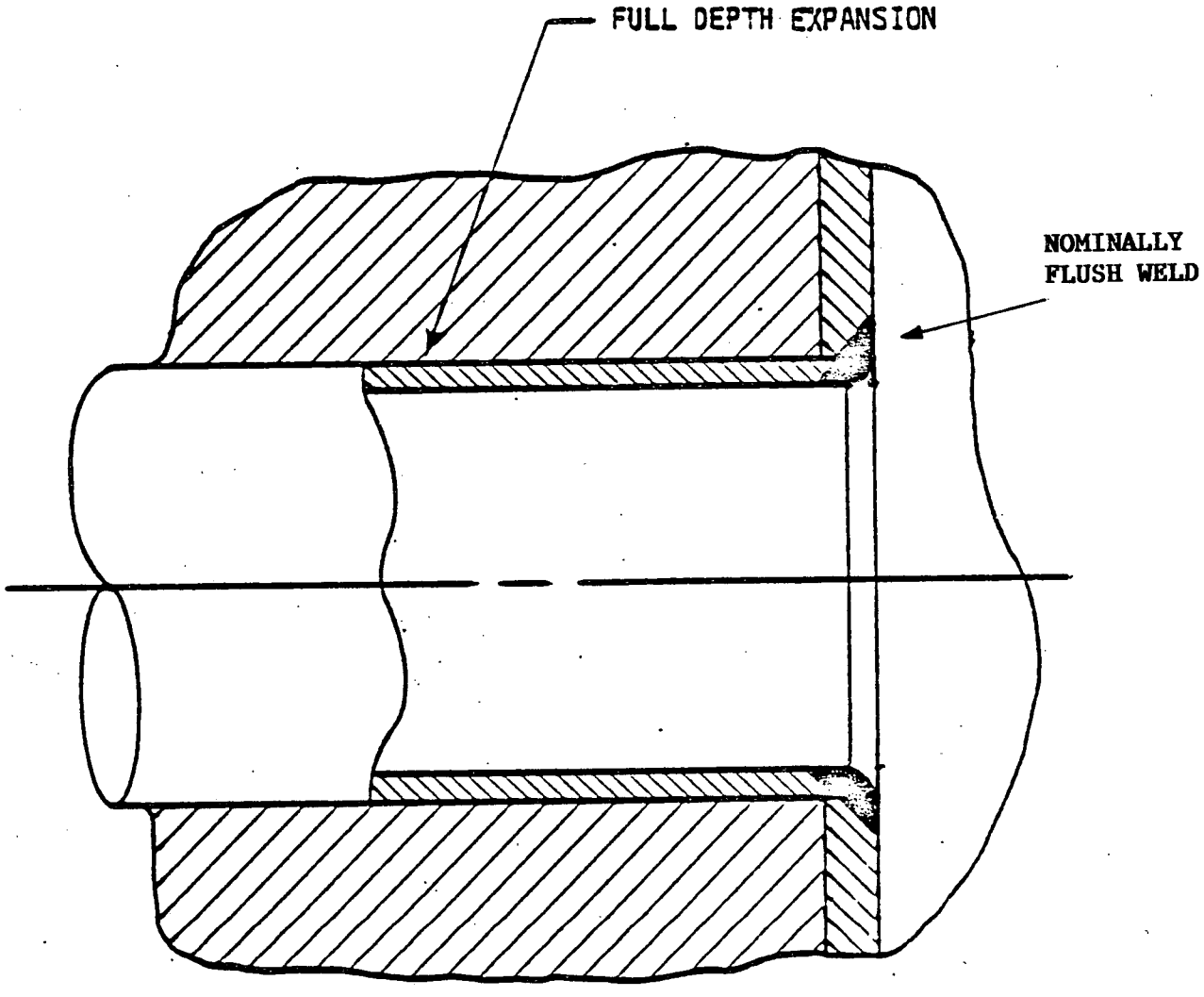

H. B. ROBINSON UNIT NO. 2
STEAM GENERATOR REPAIR REPORT

TUBE-TO-TUBESHEET JUNCTURE

Figure 2.2-2

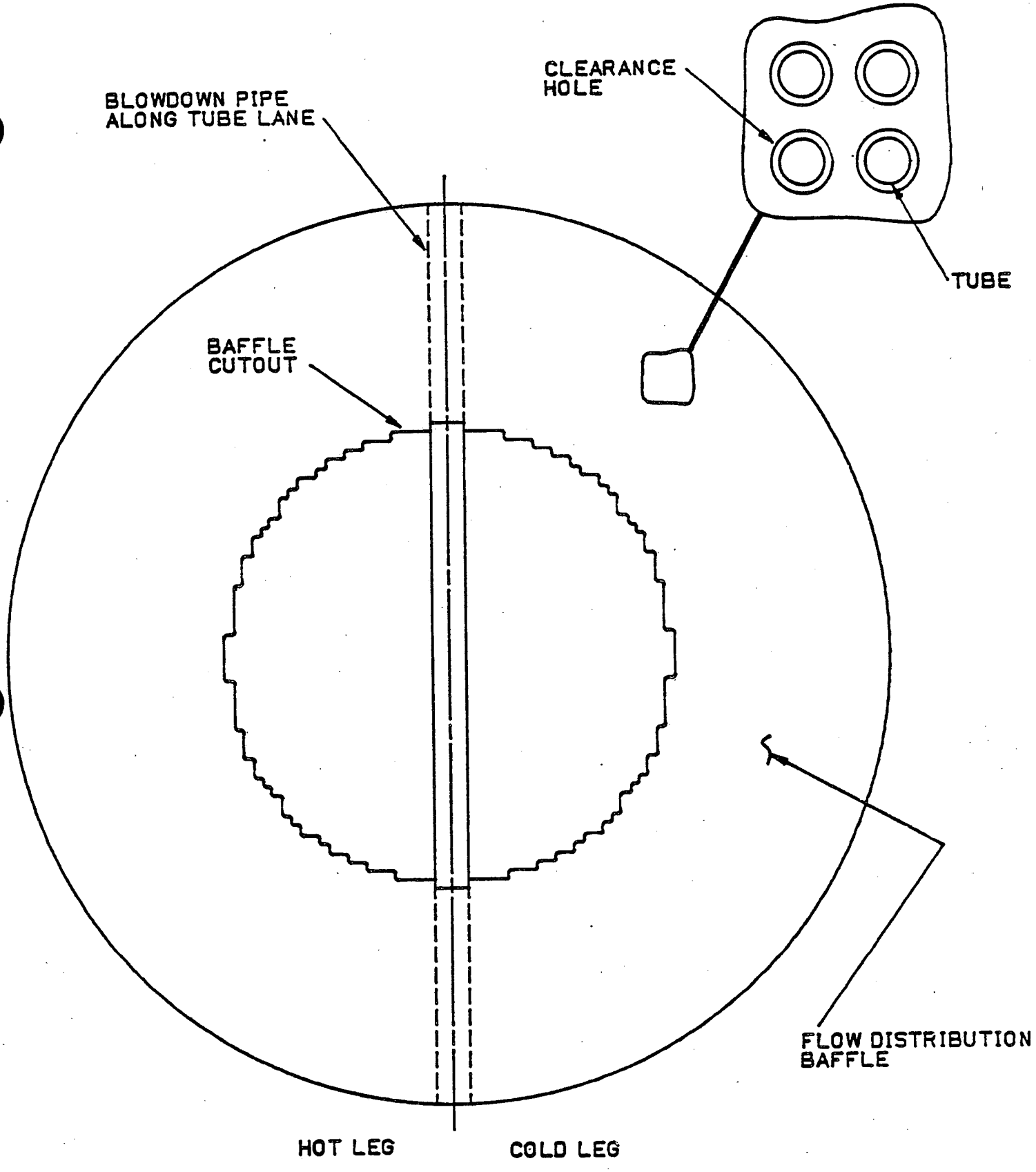

H. B. ROBINSON UNIT NO. 2
STEAM GENERATOR REPAIR REPORT

FLOW DISTRIBUTION BAFFLE AND BLOWDOWN

FIGURE 2.2-3

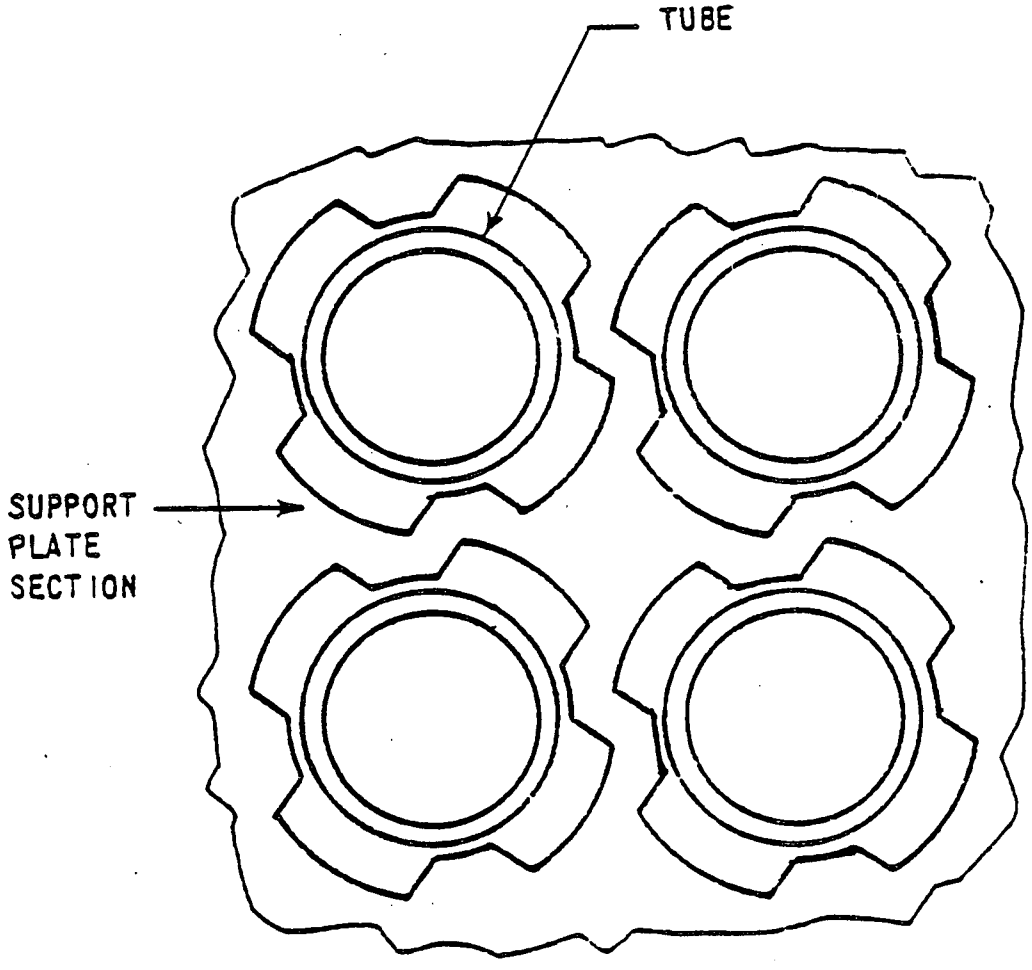

H. B. ROBINSON UNIT NO. 2
STEAM GENERATOR REPAIR REPORT

QUATREFOIL TUBE SUPPORT PLATE
SCHEMATIC

FIGURE 2.2-4

3.0 COMPONENT REPLACEMENT PROGRAM AND PROCEDURES

This section discusses the engineering evaluation of the field activities required to implement the steam generator repair. Figure 3.0-1, Outage Sequence, and Figure 3.0-2, Removal Sequence, illustrate the probable lower assembly removal approach and general plan for the replacement program. It should be noted that implementation methods and procedures may vary from those described below as engineering is finalized. The methods below are provided to demonstrate feasibility of implementation. Any changes incurred during detailed design will not alter the envelope of construction incidents postulated in Section 5.2.

The steam generator lower assemblies will be removed and replaced through the equipment hatch. 1

Handling of the steam generator assemblies inside the containment will be performed by the existing polar crane. The polar crane will be modified as necessary to facilitate upgrading from the current 155 ton rated capacity to a capacity of approximately 210 tons. The lower steam generator assemblies will be raised above the operating floor and moved to a point above the head storage cavity by rotating the crane and traversing the trolley as required. Trolley travel will be restricted by mechanical means in accordance with any limits set forth by the rerating analysis.

A transfer platform will be constructed through the equipment hatch into the head storage cavity which will provide the structure on which to move the generator lower and upper assemblies in and out of the containment building. This platform elevation will be approximately 234' or about 9' above yard grade. The polar crane will lower the lower assemblies to the transfer platform. The lower end of the assembly will receive a support saddle and will be drawn out through the equipment hatch as the polar crane lowers the upper end onto a second receiving saddle. The downending device and upper end support saddles will be track or roller mounted for ease in maneuvering through the hatch. 1

Outside of the containment building, the lower assemblies will be transferred to a heavy duty transfer trailer by a crane which will pick up and move the load longitudinally. The transfer trailer will be used to transport the lower assemblies between the containment and laydown or storage areas as required. Refer to Figure 3.0-4 and 3.0-5 for additional details. 1

The transfer platform for handling the lower assemblies will be supported on cribbing or steel framing directly from the containment ground floor, which is at Elevation 226', and is integral with the building foundation.

1

Cylindrical reinforced concrete biological shield walls mask the portion of the lower assemblies which project above the operating deck. Approximately the top 2 to 3 feet of these shield walls will be removed to provide access for cutting the welded joint between the steam dome and the transition cone of the lower section. Removal of this top section of shield wall will provide adequate head room for the polar crane to lift the lower steam generator sections above the operating deck and biological shield, and to move them to the exit. The removed shield wall sections will be replaced due to ALARA considerations for future operations.

Clearance for equipment making the cut between the lower assemblies and the channel head is adequate for steam generators B and C. Steam generator A access will require removal of approximately 1 cubic yard of concrete to provide room for the automatic cutting machine to travel around the vessel. Impact on existing equipment or structures is minimal.

Removal of the lower assemblies through the existing equipment hatch will have minimal impact on the site layout in terms of new foundations or additional facilities. The lower assemblies during transit to and from the storage/laydown area will not be required to cross any underground safety related equipment.

No special foundations will be required adjacent to the equipment hatch. No permanent modifications to existing structures are expected. Analysis of potential damage due to failure of lifting equipment is discussed in Section 5.2.

3.1 CONSTRUCTION FACILITIES

3.1.1 GENERAL

Special facilities and preparations in the plant yard area and inside the containment building will be required in support of the steam generator replacement. The plant building arrangement is such that there is an adequate yard area directly in front of the equipment hatch which is free of any permanent facilities. This circumstance allows ample space for construction of temporary facilities to handle personnel, material, and the large steam generator components with little impact on plant permanent facilities or plant safety.

Figure 3.1-1 shows the total site with lay-down areas, construction buildings, temporary roads and railroads, and the planned pathway for movement of the steam generator lower sections. It is expected that the replacement lower assemblies will be on site prior to the start of the replacement operation and their temporary storage location is shown.

Figure 3.1-2 shows an enlarged plan view of the area directly in front of the equipment hatch, the transfer platform, and the equipment for steam generator handling. 1

3.1.2 SITE PREPARATION

Construction facilities (office, warehouses, shops, etc.) are already established at the Robinson Plant for the performance of miscellaneous modifications and will be used as well for modifications associated with the steam generator replacement.

The construction facilities, except for warehousing laydown areas, a fabrication shop, and some office space, are located entirely within the security boundary providing convenient access to the work areas. Consideration is being given to the possible need for expanding this available area by moving the existing west fence further west, and for providing a secondary personnnel access at the south security boundary and vehicle access at the west security boundary. Construction of a new permanent bulk storage warehouse will be completed and utilized during the steam generator work. Sanitary treatment facilities for the site are also being increased and together with supplementary temporary facilities will be adequate for the large construction work force. 1

The new steam generator sections will be received by rail and stored west of the existing yard storage area (see Figure 3.1-1). The generator sections will be lifted from the delivery car and lowered onto temporary storage saddles. This method has been selected for ease of retrieval when the bundles are later placed on a transfer trailer and moved to the containment building. A road will be constructed and/or improved from the storage area to the transfer platform at the equipment hatch to allow use of the heavy duty transfer trailer. 1

3.1.3 CONTAINMENT PERSONNEL ACCESS BUILDING

A temporary enclosure will be provided near the equipment hatch for personnel change areas, radiation control check points and facilities, and as a storage area for tools and portable equipment. There will also be an area dedicated to staging materials in and out of the containment. 1

1

3.1.4 MATERIAL HANDLING OUTSIDE CONTAINMENT

Material handling outside the containment at the equipment hatch will be provided by:

a) A fifteen ton capacity or equivalent hydraulic mobile crane with telescoping boom 1

b) Rail or roller mounted carts (mounted on the transfer platform) which can be moved in and out of the containment

c) A crane at the containment hatch area.

d) A large crane in the laydown storage area. 1

Refer to Figure 3.1-1 for crane locations

3.1.5 CONTAINMENT PREPARATIONS

3.1.5.1 Polar Crane

The existing polar crane as discussed previously was temporarily rerated during original plant construction to accomodate handling the 212 ton lifts required by the lower steam generator assemblies. The crane will again be rerated to accommodate the steam generator replacement evolution. Rerating studies are currently being performed by the crane manufacturer (Whiting Corp.). Modifications, based on results of Whiting's analysis, will be incorporated to facilitate rerating the crane for the desired lifts. Upon completion of all modifications, the polar crane will be load tested. Since the crane is being uprated from 155 ton capacity to approximately a 210 ton capacity, a standard 125% load test is not considered feasible. A 100% load test will be performed using the actual load. A written procedure will be provided to accomplish the load test. In addition to and prior to the load test, a thorough examination of the crane will be performed, including NDE of the crane hook, and inspection of all major load bearing components and mechanical and electrical equipment that have not been modified or replaced.

The lower steam generator assemblies will be lifted using conventional rigging techniques. One method of rigging to the polar crane main load block is by a pin to a steam generator lift beam equipped with toggle arms or endless grommet type slings. The toggle arms or slings will be attached to existing lifting trunions on the lower assemblies. Each lower assembly will be lifted to clear obstacles on the operating deck and then the assembly will be rotated to a point over the center of the head storage area and approximately on center line with the 1

equipment hatch. The lower assembly will then be lowered to the transfer platform and moved as described in paragraph 3.0.

1

Polar crane operators as well as all other crane operators will be trained and qualified in accordance with current approved procedures. Only qualified personnel will be permitted to operate the cranes. Written procedures describing the methods, precautions and proper load paths will be followed for handling the heavy equipment.

3.1.5.2 Laydown Space Provisions

The portion of the operating deck above the reactor head storage compartment consists of a number of removable reinforced concrete beams which are removed for head storage or for access to the equipment hatch level by the main hook of the polar crane. During steam generator replacement, the reactor head will be in place on the reactor and the "pie blocks", as the removable beams are termed, must be out of the way. The "pie blocks" will be stored outside of the containment. The reactor vessel CRDM missile shield will be decked over to provide storage space and work areas. The refueling canal will be decked with a structural steel platform for providing storage and work space.

1

Engineering and structural analyses will be performed to verify that the existing structures are capable of supporting all temporary laydown loads without permanent modifications. The major items requiring investigation are: 1

a) Loads on base mat from transport of the steam generator lower sections.

b) Temporary laydown area spanning the refueling canal. 1

c) Temporary laydown area on the CRDM missile shield.

3.1.5.3 Steam Generator Transfer Platform

The transfer platform outside of the equipment hatch will be at an elevation to allow its extension through the hatch, across the annulus between the crane wall and the exterior containment wall and into the head storage compartment. Loads from the transfer platform will be transmitted directly to the containment floor by cribbing (a distance of less than 7 feet). 1

The transfer platform will support the transport and upending fixtures during movement of the steam generator lower assemblies through the hatch and while upending or laying the assemblies down as they are moved from the hatch to the operating deck by the polar crane.

The transfer platform will also provide personnel and material access pathways and will be fitted for rail carts to move material through the hatch.

3.1.5.4 Miscellaneous Hoisting Equipment Inside Containment

The existing jib crane at the operating deck level which is now maintained to serve a removable deck hatch in the annulus area above the containment equipment hatch will be upgraded or replaced. It will be used to raise miscellaneous materials to the operating deck and will reduce demands for the polar crane.

In addition, temporary low capacity cranes will be provided inside containment to provide additional hoisting capacity during the disassembly and assembly operations.

3.1.5.5 Containment Ventilation

Existing ventilation systems will be used to provide the main input to air circulation and to control ventilation within the containment. Exhaust air will be handled through the existing vent facilities to utilize the existing monitoring and filtering equipment.

Provisions will be made to provide cooled air to the containment using temporary cooling equipment and ductwork. During certain operations, the bays may be enclosed to contain any airborne contamination and will be exhausted through portable HEPA filter units. 1

3.1.5.6 Service Air and Power

Supplementary service air and power will be provided with compressors and an electrical load center outside the containment. Air hose and power leads will enter the containment through existing openings or below the equipment hatch transfer platform.

3.1.6 TRANSPORTATION ON SITE

Transportation of the steam generator lower assemblies will be by heavy duty transfer trailers as previously described. 1

The storage area (for both new and replaced assemblies) is located in the graded area west of the plant as shown in Figure 3.1-1.

1

3.1.7 STORAGE HANDLING FOR REPLACEMENT LOWER ASSEMBLIES

A storage area next to the steam generator tomb will be provided to temporarily store the new steam generators. The new steam generators will be rigged from the railcars to storage saddles using a large crane. Figure 3.1-1 shows the arrangement. 1

3.1.8 RIGGING CONFIGURATION

The existing polar crane bridge and hoist will be modified to sustain the loads imposed by a lower assembly and its rigging. Rerating studies and investigation of any necessary modifications are being performed by the original crane manufacturer and any required alterations will be performed. 1

The steam dome assemblies will be removed from the lower assemblies and lifted by existing pad eyes and commercial slings and rigging hardware. They will be removed from the containment and subsequently handled as necessary to perform modifications to the internals and to prepare the weld joint for rewelding to the new lower sections. The assemblies weigh approximately 110 tons each and are well within the present capacity of the polar crane. 1

The lower assemblies will be lifted from their compartments using conventional hoisting techniques. Existing trunnions on the assembly will be engaged using either conventional slings or a special steam generator lift beam equipped with toggle arms. The polar crane sister hook is equipped to attach a lifting beam with a pin or to accept two balanced slings.

The existing lower sections will be parted from the channel heads, hoisted sufficiently to clear the truncated shield walls and transferred to a point over the head storage cavity. Movement pathways are shown on Figure 3.1-3. The location is about 35 feet from the containment exterior wall and directly opposite the equipment hatch. The sections will be lowered to the transfer platform. The lower end of the assembly and its upending fixture will be drawn out toward and through the equipment hatch while the polar crane continues to lower the upper end. Roller mounted saddles will receive the upper and lower end of the generator lower section and when a horizontal position has been achieved, the polar crane will be released, and the lower assembly will be pulled out through the hatch. See Figures 3.0-4 and 3.0-5. 1

A crane will be positioned outside the containment equipment hatch The crane will be load tested in accordance with a written load test procedure prior to actual use.. The old generator lower section will be lifted off the transfer platform by the crane and transferred to the transfer trailer for movement to storage (reverse order for new lower sections). 1 1

The actual sequence of moves will be selected to optimize use of the polar crane and other sequential operations, but will likely be in the following order:

a) Remove upper generator Section A.

b) Remove upper generator Section C.

c) Remove lower generator Section A.

d) Remove lower generator Section C.

e) Remove upper generator Section B.

f) Remove lower generator Section B.

g) Replace lower generator Section C.

h) Replace lower generator Section A.

i) Replace lower generator Section B.

j) Replace upper generator Section B.

k) Replace upper generator Section C. 1

l) Replace upper generator Section A.

3.1.9 RIGGING AND HANDLING CONTROLS

The rigging arrangements discussed herein and inherent plant arrangement show that crane and or crane boom failure would not adversely impact the ability to achieve and maintain safe shutdown conditions and provide adequate cooling water for stored spent fuel regardless of which direction the crane might fail. All structures required to maintain the plant in a safe shutdown condition would maintain structural integrity. Postulated failures of lifting equipment are discussed in Section 5.2. of this report.

As previously discussed, rigging and material handling operations will be performed in accordance with current approved procedures as well as special procedures specifically developed for steam generator replacement. These procedures will be in conformance with the requirements of OSHA, ANSI B30 series, and other appropriate federal regulations and guidelines.

The administrative controls to be implemented address such items as:

a) Limit of lift height - loads will be raised only to a height sufficient to provide adequate clearance for horizontal movement.

b) Travel speed and routes for cranes and other transport equipment will be controlled to avoid vital structures and to minimize the potential for load handling incidents.

c) Predetermined load paths and travel routes will be identified in procedures. These load paths are tentatively shown on Figures 3.1-1 and 3.1-3. 1

d) Lifting equipment will be thoroughly inspected and load tested prior to use. Visual inspection of lifting apparatus will be performed prior to each lift.

e) Only qualified operators will operate cranes.

f) Ground bearing capability in lifting areas has been verified by soil studies. 1

g) Since safety related functions will not be adversely affected by a postulated toppling of a crane, special seismic/high wind criteria which exceed normal construction practices will not be required.

3.2 CONCRETE, STRUCTURAL, AND EQUIPMENT INTERFERENCE REMOVAL AND REPLACEMENT

Engineering evaluations are being conducted to determine the impact of repair activities on equipment and structures in the containment. This evaluation is being conducted to ensure that the repair activity will not result in unreviewed safety questions due to equipment removal or interruption of safety related functions.

Detailed engineering studies are in progress to precisely define the structures, components, pipes, cables, conduits, instruments, ducts, etc. within the containment affected by the repair activity. The discussion that follows provides the results of the study to date. It is provided to illustrate the minimal impact on safety related equipment within the containment.

3.2.1 MECHANICAL EQUIPMENT

It will not be necessary to remove any mechanical equipment in order to provide access to the generators or to provide a movement pathway.

Laydown area requirements and provisions of a load traverse path from the generator cavities to the equipment hatch requires partial dismantling of the manipulator crane. The crane mast and monorail will be removed and stored in the refueling canal after fuel has been removed from the building. The overhead frame will be dismantled and stored outside the containment. 1

1

3.2.2 PLATFORM AND STRUCTURES

Two sections of platform must be removed and stored for reinstallation. Both are of steel frame construction with bolted connections and grating decks. Conduit and piping supported on these platforms will be either relocated, or removed and replaced after platforms are re-erected.

The existing platform now serving the equipment hatch inside the containment will be removed and replaced by a transfer platform with capacity to support the steam generator sections.

Directly above the equipment hatch, a portion of the mezzanine (Elevation 251.5') deck must be removed to provide clearance for the steam generator rotation from vertical to horizontal as it moves through the hatch. No modifications to these platforms are required. Temporary storage may be either within the containment or outside in a radiation controlled area. 1

3.2.3 REINFORCED CONCRETE

Approximately the top 2 to 3 feet of the steam generator biological shield walls must be removed to provide access to the steam dome cut line. The wall sections will likely be removed by abrasive cutting in large sections. The sections will be salvaged and later reinstalled. Crevices between blocks would be filled with mortar to prevent possible streaming.

A portion of a missile shield wall adjacent to steam generator A must be removed to allow clearance for the automatic cutting equipment. Removal of about 1 cubic yard of concrete is required. An engineering study will be performed to determine if the wall section must be replaced, or if another type construction (such as steel plate) can be substituted with less impact on the project. Should replacement in kind be necessary, it will be performed by splicing the existing reinforcing steel using normal construction methods.

3.2.4 PIPING SYSTEMS

The major piping which must be removed are the sections of main steam and feedwater lines connecting to each steam generator. Both lines will probably be cut at the steam generator nozzles and in the vertical runs at an elevation convenient to the operating floor. No cuts will be made until the remainder of the piping system has been temporarily stabilized and restrained. The locations of the cuts are shown in Figure 3.2-0. All open ends of cut piping will be capped and/or plugged to ensure cleanliness during the repair program.

Other piping to be removed and/or relocated include the following:

a) Steam Generator blowdown piping, as required.

b) Vent piping, as required.

c) Sections of small bore service air, instrument air, and fire protection lines, which are supported by the mezzanine to be removed for steam generator clearance, will be relocated prior to mezzanine removal.

Removal of piping systems will be accomplished by machine cutting with remotely controlled equipment or with the option of flame cutting where limitations or advantages warrant.

The governing overall code for the steam generator replacement shall be ASME Section XI, 1980 Edition with addenda through the Winter of 1980. All piping work will be per the original plant criteria, the Power Piping Code (B31.1) as discussed in the H. B. Robinson Updated FSAR.

3.2.5 INSTRUMENTATION

The following instrumentation, sensing lines, and associated supports will be temporarily disconnected and/or removed, and stored: 1

Steam Generator "A"
Level Transmitters - LT 474, LT 475, LT 476, and LT 477

Steam Generator "B"
Level Transmitters - LT 484, LT 485, LT 486, and LT 487

Steam Generator "C"
Level Transmitters - LT 494, LT 495, LT 496, and LT 497

All open ends of sensing lines will be capped to ensure cleanliness during the repair period.

In the appropriate sequence of the SG reinstallation schedule, the level transmitters and sensing lines will be reinstalled and returned to service using standard procedures.

Disconnection of associated instrument cable is discussed in Section 3.2.6.

3.2.6 CABLE AND CONDUIT

The steam generator repair program does not require the removal or relocation of any major pieces of electrical equipment and control equipment, except the level transmitter equipment noted in Section 3.2.5 above.

Only power and instrument cable and conduit as described herein are affected.

a) Instrument cable for the level transmitters noted in Section 3.2.5 above will be temporarily disconnected at the cable terminations, and will be pulled back and coiled out of the path of the equipment removals. They will be properly tagged and identified for subsequent reinstallation after the major equipment is returned to position and placed into service utilizing standard procedures.

b) One (1) 1 1/2" electrical conduit will be removed and/or relocated to accommodate removal of equipment through the equipment hatch.

c) Provision of the necessary electrical power inside the containment will require utilization of selected permanent equipment power circuits. Temporary load centers will be provided inside the containment but may require temporary disconnection of equipment power cables either at the equipment or at the containment penetrations. Normal jumper and wire removal procedures will be used to keep track of these changes.

d) Table 3.2-1 will be provided (later) to identify the Unit 2 circuits to be temporarily disconnected and/or removed.

3.2.7 DUCTWORK

Short sections of permanent ventilation duct must be removed to provide adequate working room at the channel heads of steam generators A and B. The ductwork is of welded construction and the removed portions will be salvaged and reinstalled without modification.

3.2.8 STEAM GENERATOR UPPER LATERAL RESTRAINTS

Seismic restraint for the steam generator is provided by a ring girder located just below the operating deck. The ring permits movement to accommodate thermal expansion, but is prevented from lateral motion by traveling in guides. Hydraulic snubbers control movement in the direction of the thermal expansion.

Plans are being prepared to effect the SG replacement either with minor or extensive dismantling of the restraint structure. The decision will be made later as to the method when access can be obtained for precise measurement of both the rings and the replacement generator sections. A model of the area and the upper restraint has been made to aid in the development of our replacement plan.

3.3 STEAM GENERATOR MID-SECTION REPLACEMENT

3.3.1 STEAM GENERATOR CUTTING METHODS AND LOCATIONS

Following removal of steam and feedwater piping connections to the steam dome (either by machine or flame cut) the steam dome will be parted by use of a track-mounted torch cutting unit at the site of the original weld between dome and transition cone. Sufficient material will be left to allow a finish weld preparation cut to be made prior to reinstallation. The inside wrapper will also be parted by flame cutting and the entire assembly removed. ALARA considerations will be paramount in developing this activity in view of the high radiation level from the steam generator tubes. After removal of the steam dome, a metal shield will be welded in place over the open end of the lower steam generator section.

The lower assembly will be separated from the channel head by track-mounted machine cutting methods for the circumferential cut, following a plasma arc cut of the channel head divider plate. The cut location will be at the site of the original weld between channel head and tube sheet. A cover plate will be installed on the tube sheet end when the assembly is lifted above the operating deck prior to lowering the assembly into the head storage cavity. 1

Where flame cutting is used, appropriate preheating will be used to ensure integrity of the component.

3.3.2 STEAM GENERATOR REASSEMBLY

Following removal of the existing lower assembly, the channel head and divider plate will be machined to the appropriate contour for the replacement weld. Portable milling equipment is available for this operation and will be utilized. The steam dome weld preparation will be manual.

The weld joint design for the channel head will generally follow the methods used at Turkey Point and will permit most of the welding to be performed from outside the vessel. A detail of the proposed weld preparation is shown in Figure 3.3-1 which is to be provided later.

After completion of weld prepping of the existing lower channel head, Figure 3.3-1, a new steam generator lower assembly will be lowered into position and welded, followed by the replacement of the reworked moisture separator dome.

3.3.3 WELDING CODES, PROCESSES, AND MATERIALS

All lower assembly welding post weld heat treatment and NDE inspection during installation shall be in accordance with the ASME Code Section XI, and ASME Code Section III Div. 1, 1980 edition with addenda through the Winter of 1980, with the exception of code stamping of the component assemblies.

All welding shall be accomplished using the flux cored arc welding (FCAW), shielded metal arc welding (SMAW), gas metal arc welding (GMAW), and/or gas tungsten arc welding (GTAW) processes. The filler material shall be of a suitable type, (such as E7018 for piping, E8018 for vessel girth welds, and inconel 85 for cladding) to deposit a "Low Hydrogen" weldment. All welding procedures shall be qualified in accordance with ASME Sections III and IX for all code work. 1

The stress relief heat treatment of welded joints will take into account the previous total accumulative soak time of the existing steam generator components to ensure full compliance with ASME code requirements. Welded joints shall be locally post weld heat treated (PWHT) by electrical resistance heating at the temperature of 1125° F ± 25° F to provide stress relief. During preheating and PWHT, thermocouples and insulation shall be utilized for maximum temperature control and to limit heating of other areas and components.

In order to minimize stresses on the cladded tubesheet, the existing Inconel divider plate will be welded to the Inconel stub on the new steam generator lower assembly after the other steam generator welding and PWHT is complete. The welding process will be TIG process with Inconel bare wire.

3.4 RADIOLOGICAL PROTECTION PROGRAM

It is the goal of CP&L to conduct the Steam Generator Replacement Project in such a manner that exposures to both on-site and off-site personnel are maintained at levels that are as low as reasonably achievable (ALARA), that environmental contamination is held to a minimum, and that loss of Company and contractor equipment due to radioactive contamination is kept acceptably low.

Carolina Power & Light Company intends to pursue a comprehensive health physics program designed to meet these objectives. It is felt that CP&L's Health Physics Manual and its implementing procedures are adequate to handle a project of this magnitude and for this reason all activities will be conducted in full accordance with corporate and plant specific procedures. Existing procedures will be modified or new procedures established as necessary to provide guidance in new or unusual situations.

3.4.1 GENERAL ALARA OVERVIEW

Carolina Power & Light Company management is committed to having a strong ALARA posture as the basis for sound programs in operational health physics, environmental protection, facility design, and emergency preparedness. The fundamental objective of any such program is the reduction of personnel exposures. Some of the major dose-reduction techniques that will be employed in the replacement project include:

3.4.1.1 Decontamination

a) General Area Decontamination - During the initial stages of the project, a general decontamination of the containment building will be undertaken. Most of the exposed surfaces in task related areas will be cleaned. The removal of much of the radioactive surface contamination will decrease the potential for the spread of contamination to clean areas, lessen the chances for personnel and equipment contamination incidents, and reduce the need to wear excessive amounts of protective clothing. This results in less fatigue and enhanced work efficiency. Hence, less time is spent in lower exposure rate areas resulting in fewer man-rem.

After the initial decontamination, additional surface contamination generated from the replacement process will be removed by an on-going decontamination program.

b) Primary Surface Decontamination - In addition to the general decontamination, specific deconning will be performed on high exposure rate components such as the steam generator channel head.

In the channel head cut approach, some decontamination of the channel head region of the steam generators would be advantageous in maintaining exposures to a minimum. The interior surface of the channel head will probably be decontaminated by some remote means prior to the final cut separating the lower shell assembly from the channel head. Appropriate blocking devices will be placed in the reactor coolant pipe prior to doing the decontamination. The man-rem expended in the decontamination effort will be balanced against the potential man-rem savings incurred during the removal operations.

Two different decontamination methods are presently being evaluated for primary surface decontamination. They are:

a) Fill and Soak - This would involve filling the primary side of the SG with a suitable decon solution and allowing sufficient soak time for the solution to work. This soak would be followed by a rinse of the primary side. The liquid waste would be processed as appropriate and drummed for off-site disposal.

b) Mechanical - A technique that would spray a wet abrasive grit at a high velocity against the area to be decontaminated. This method removes the surface layer of the metal that contains the radioactive contamination. The abrasive, surface contamination and corrosion products are filtered out of the wet slurry and drummed for off-site disposal. The liquid stream would be processed as appropriate and drummed for off-site disposal. This method was used at San Onofre Unit 1 and Turkey Point Units 3 and 4. 1

Carolina Power & Light Company will continue to evaluate which method or combination of methods will lead to the most effective man-rem utilization.

3.4.1.2 Temporary Shielding

Temporary shielding will be used as necessary to reduce the exposure rates from nearby components. Decisions involving the use of temporary shielding will be made on a case-by-case basis weighing man-rem saved against man-rem expended to shield. Other factors such as space limitations and floor loading limitations will also be considered.

The following are areas where the use of temporary shielding is anticipated:

a) Components, such as contaminated piping and valves adjacent to intensive work areas will be shielded.

b) "Hot spots" due to concentration of contaminants in piping or valves will be flushed if possible and will receive special attention or shielding as appropriate.

c) Shielding will be provided for the steam generator lower assembly ends in the form of steel cover plates. The upper end plate will be installed as soon as the steam dome is cut and lifted away. The lower end (tube sheets) cover plate will be installed when the assembly is lifted above the operating deck but before it is lowered into the head storage cavity in front of the equipment hatch.

d) The steam generator lower assembly will be essentially filled with water while the steam dome is being removed to reduce radiation exposure from the contaminated tubes.

It is not expected that shielding in addition to the lower assembly end cover plates will be required during removal of the steam generator lower assemblies and the transportation to storage or disposal.

e) The steam generator channel head will be shielded and/or further decontaminated after removal of the lower assembly.

3.4.1.3 Specialized Tools

Special tools, such as remote cutting and welding apparatus will be used to the maximum extent practicable to:

a) Reduce the man-hours required to perform a specific task, and/or

b) Allow the workers to be further removed from the radiation source, and/or

c) Allow the workers to remain behind a shield wall while the task is being performed by an automated device.

The state-of-the-art for remote cutting and welding apparatus is continuously changing throughout the industry. The developments in the field will be followed and techniques will be evaluated using the following considerations:

a) Man-hours required to set up the equipment

b) Man-hours required to perform the task

c) Experience with the use of the proposed equipment

d) Schedule impact associated with the equipment.

3.4.1.4 Removal of Valves and Piping

Carolina Power & Light Company may remove valves and piping (associated with this project) which significantly contribute to general area radiation fields in the intensive work areas. This material would then be either packaged for shipment and disposal or decontaminated for future reinstallation.

Use of this method will be measured against the net exposure savings expected from shielding these components. Carolina Power & Light Company will use the method which is evaluated to be the most effective use of man-rem. Before removal or disposal, CP&L will identify any and all major piping and valves, their associated radiation levels, and their final disposition.

3.4.1.5 Establishment of Low Background Waiting Areas

During the steam generator replacement activities, certain areas will be designated as low exposure rate waiting areas and will be posted as such. Locations of these areas will be determined by H. B. Robinson Health Physics personnel based on periodic survey results. Personnel not actively engaged in a specific task will be directed to an approved waiting area. The airborne activity controls of Section 3.4.5 will maintain airborne radioactivity concentrations at acceptably low levels in the waiting areas.

3.4.1.6 Personnel Training

It is expected that significant man-rem reduction will be achieved through proper personnel training. Personnel involved with the steam generator replacement will receive appropriate training in accordance with established

procedures and additional special requirements. This training will consist of the following:

a) General Employee Training - Employees will receive comprehensive training in ALARA philosophy, biological effects of radiation, dose reduction measures, and use of protective equipment.

b) Job-Specific Training - Selected groups will be trained in specific hazards associated with specialized components such as the steam generator.

c) Dry-Run Training - When necessary, procedures will be attempted before going into a radiation area. This guarantees complete understanding of complicated sequences and reduces non-productive time.

d) Mock-Up Training - When practical and necessary, work will first be attempted on a suitable mock-up. This will familiarize the worker with the equipment and cause the job to flow more smoothly.

3.4.2 ACCESS CONTROL

In order to facilitate containment access and control of the contractor force expected during the project, a temporary facility will be constructed near the equipment hatch. This facility will be a suitable enclosure which will include provisions for: 1

a) Dress-Out Area

b) Sanitary Facilities (Outside) 1

c) Control Checkpoint

d) Frisking Station

e) Respirator Checkout Area

f) Tool Room

Personnel will follow accepted procedures while processing in and out of the facility.

Personnel will enter the change/dress-out area, dress out, and proceed to the radiation control checkpoint. From there, they will enter the containment building through the equipment hatch. Personnel leaving containment will remove their protective clothing in the undressing area and frisk before returning to the change/dress-out area. In event personnel decontamination is necessary, a passage is provided to the existing plant contaminated shower/decontamination facility. Additional Health Physics access control will be provided where necessary at selected points inside the containment building as well as at the temporary access control area.

Provisions will be made for easy and rapid access to the HP counting room to provide fast turnaround on contamination checks. A new radiological laboratory facility is planned for construction prior to the scheduled steam

generator replacement. This new facility will provide improved facilities for HP control and support.

3.4.3 PERSONNEL MONITORING

To determine the effectiveness of the project ALARA Program, containment efforts, and dose reduction techniques, as well as to provide permanent exposure records, comply with various monitoring requirements, and establish a data base for future planning, an extensive personnel monitoring program will be utilized. The integrated program will monitor both external and internal exposures.

a) External Monitoring - All personnel entering a radiation area will wear a dosimeter containing an array of TLDs and, in addition, will wear a self reading pocket dosimeter. This combination will provide both permanent record information and real time exposure information useful in on-the-job decision making. Multiple badging will be utilized in certain circumstances as required by CP&L radiation control procedures. Carolina Power & Light Company plans to have dose tracking by task capability available for use before the start of the project.

b) Internal Monitoring - Workers who enter a radiation and/or contamination area will be monitored as necessary based on established site procedures.

3.4.4 RADIATION AND CONTAMINATION SURVEYS

In support of the ALARA program, radiation and contamination surveys will be conducted as necessary. Surveys will also incude air sampling when appropriate. Results of these surveys will be used to determine the need for protective clothing, additional shielding, degree of health physics surveillance, and other such measures. A listing of typical instruments available for these surveys is included in Table 3.4-1.

3.4.5 CONTROL OF AIRBORNE RADIOACTIVITY

Airborne activity inside containment during the steam generator repair effort will be controlled, monitored, and ultimately released via the plant vent stack. Air will be drawn through the equipment and personnel hatches, passed through HEPA filters and exhausted by the purge system via the plant vent, thus precluding airborne radioactive particles or gases from leaving containment openings used for construction activities. The air being exhausted will be monitored as it passes the existing sampling station located within the main plant vent.

In addition to bulk containment atmosphere control of airborne activity, appropriate localized control will also be provided as necessary using temporary enclosures and HEPA filtration units to minimize the spread of contamination and airborne activity throughout the containment. Personnel working in areas of potential airborne contamination will wear respiratory protection equipment, as required, in accordance with the HBR Radiation Control and Protection procedures and 10 CFR 20.103 requirements. No special provisions are anticipated for machine cutting operations inside containment, and when plasma arc is utilized, appropriate measures will be applied.

The concrete sections requiring cutting will be thoroughly decontaminated prior to cutting operations. This will significantly reduce the transferable contamination levels of the concrete.

Proposed concrete cutting methods are intended to reduce the generation of airborne dust particles. The cutting technique to be used is a water cooled process with the benefit that the removed concrete material from the kerf is carried away in the form of a slurry. Retention dams and splash shields will contain and direct the slurry to maintain containment cleanliness and to control potential contaminants. For these reasons the impact of concrete removal on airborne radioactivity is insignificant.

3.4.6 LAUNDRY FACILITIES

During major outages, portable dry cleaning units are brought on site to supplement normal laundry processing. Approximately four units will be utilized for the steam generator outage. These units will either be permanently installed or rented for the duration of the outage. Since these are dry cleaning units, no radioactive liquids will be generated in their use.

3.4.7 GENERATION AND DISPOSAL OF SOLID RADIOACTIVE WASTE

The majority of radioactive solid waste generated can be generally categorized as:

a) Dry Active Waste - This will consist mostly of metal shavings, paper, rags, etc.

b) Concrete - Since most of the concrete is scheduled to be replaced in its original position, this poses a minor source. Approximately 1 cubic yard of concrete must be removed to provide access for the channel head cut on the steam generator A. This volume will require ultimate disposal. The top two to three feet of the biological shield walls for the portion of the steam generators, which projects above the operating deck, must be temporarily removed. However, this will be reinstalled and will not require ultimate disposal. The concrete which is to be disposed of will be removed from the containment, properly packaged, and shipped as "low specific activity" (LSA) material to a licensed land burial site in accordance with Carolina Power & Light Company radiation control and protection procedures.

c) Evaporator Concentrate - This is the residue of the decontaminated radioactive liquids.

d) Laundry Filters - Contaminants which are removed from the protective clothing are trapped in filters which must be periodically replaced.

e) Solidified Decon Liquids - Two possible methods of deconning the channel head are still being evaluated. The methods under consideration are the fill and soak method and the mechanical method (grit blasting). Both operations generate two kinds of radioactive waste. The fill and soak method produces a chemical slurry which will be solidified in disposable liners using either cement or the Dow solidification medium. The mechanical method produces a grit slurry which will be solidified in disposable liners using

cement. Both methods also result in the creation of contaminated rinse water which is cleaned up by portable filters and demineralizers and further processed in the plant's radwaste system.

3.4.7.1 Radioactive Waste Volume and Activity

A total of about 60,000 ft^3 containing 160(1000)* curies of radioactive waste is estimated to be generated during the SGRP. This estimate is based on existing volume reduction practices at H. B. Robinson as well as volumes and activities generated during previous H. B. Robinson outages and SGRP outages at other utilities.

The quantity of waste by category is:

Type	Volume (ft^3)	Percent (%)	Curies
DAW and Concrete	41,000	68 (64)	90
Solidified Evaporator Concentrate	18,000	30 (28)	20
Solidified Decon Liquids	1000 (5000)	2 (8)	55 (890)
Total	60,000 (64,000)	100	160 (1000)

Significant savings in volume of radwaste packaged for shipment off-site can be realized by utilizing various volume reduction techniques. CP&L is investigating various reduction techniques, e.g., box compactor, enhanced segregation program, shredder, etc., and plans to utilize some of these techniques during the SGRP.

Solid waste will be compacted, if possible, to minimize the volume and will be disposed of in accordance with applicable CP&L procedures, US DOT regulations, and burial site criteria. CP&L is developing a process control system for the solidification of radwaste which will meet the intent of NUREG-0472, Revision 3. The dose to the public from handling, processing, shipping, and burying this waste is estimated to be 6.6 man-rem. 1

3.4.8 MAN-REM ASSESSMENTS

In order to determine the radiological feasibility and impact of the replacement project as a whole, to establish a framework for the evaluation of construction alternatives, and to provide a benchmark for measuring the effectiveness of the ALARA program, a man-rem-by-task assessment has been performed.

As a prerequisite for this evaluation, detailed radiation surveys were made on all three generators using a model 6112 Teletector. These surveys were conducted with the primary sides drained and the secondary sides filled to

* Amounts in parentheses are based on the fill and soak method of deconning. Otherwise, the mechanical method is assumed.

simulate exposure levels expected during most of the removal phase. Results of these surveys are shown in Figure 3.4-1. The exposure levels given are those most typical in a range of values for a specific task area.

Some deviation between the preliminary assessment and actual exposure will occur due to uncertainties in the man-hour estimates as well as the actual exposure levels encountered during the project. Potential factors which may cause such variations include:

a) Instrument Accuracy - Portable instruments of the type used in the initial survey are accurate to ±10%. Even at 3-5 mR/hr this could amount to as much as a 100 man-rem difference over 300,000 man-hours. In areas of higher exposure rates this variation could be even greater.

b) Exposure-Rate Variation - The exposure rates used to project total man-rem are best estimate area averages. As workers move about freely, actual exposure rates may vary by a factor of 2 or 3 depending on location within a given task area.

c) Shielding and Decontamination - Since it is difficult to determine the contribution of specific components to overall radiation fields, in most cases it is difficult to quantify the effectiveness of local shielding and decontamination.

d) Construction Sequence - The order in which radiation sources such as hot piping are removed will affect exposure rates for subsequent activities. In addition, components which contribute some degree of shielding will provide elevated exposure rates when removed.

e) Equipment Reliability - Unexpected on-the-job equipment repair, removal, or replacement can contribute to increased exposure as the result of additional time devoted to task completion. The extent of such time cannot be accurately anticipated in advance.

f) Unforseen Engineering Difficulties - Special problems that may arise which require longer than expected time periods or modified approaches for task completion as well as state-of-the-art developments which expedite currently complex operations will have impacts on the final project man-rem total.

g) Skill Level of Craftsmen - Actual man-hours will depend on the expertise and job knowledge of the contractor force. More experienced workers will reduce task durations and minimize the rework of tasks.

h) Supervision - Worker productivity will be enhanced by proper supervision. Productive time will be maximized by insuring that the worker/supervisor ratio is optimized.

i) Commitment to ALARA - The workforce will be trained to implement ALARA principles, on which the radiological control program is based. The effectiveness of the workforce implementation of these principles will affect the total man-rem which will be incurred during the steam generator replacement project.

Because of these variables, the man-rem associated with each task have been rounded to the nearest 5 man-rem.

3.4.8.1 Methodology

Finally, the methodology used to estimate a task commitment involved several assumptions and techniques which included the following:

a) The quoted man-hours include the time required to dress-out and undress. It is estimated that these activities require approximately 30 minutes per entry.

b) Typical stay times average 3 hours per entry. Consequently, only 5/6 of the man-hours are available for potential work.

c) Tasks extending into several areas were fractionated based on estimated time in each area. Results were then calculated and summed to obtain an overall estimate.

d) Finally, the product of man-hours and exposure rate were multiplied by .93 rem/R in order to express the results in units of dose equivalent.

As previously stated, the resulting man-rem were then rounded to the nearest 5 man-rem in keeping with the approximate nature of the estimated man-hours and exposure rates.

As an example of how man-rem estimates were derived, we will consider the removal and replacement of insulation on the steam generator shells. This example serves not only to demonstrate Task-area fractionation but also to show how exposure rate variation is handled during subsequent project stages. The figure below depicts exposure rates present during the removal and replacement phases and also indicates time percentages allocated in each task area.

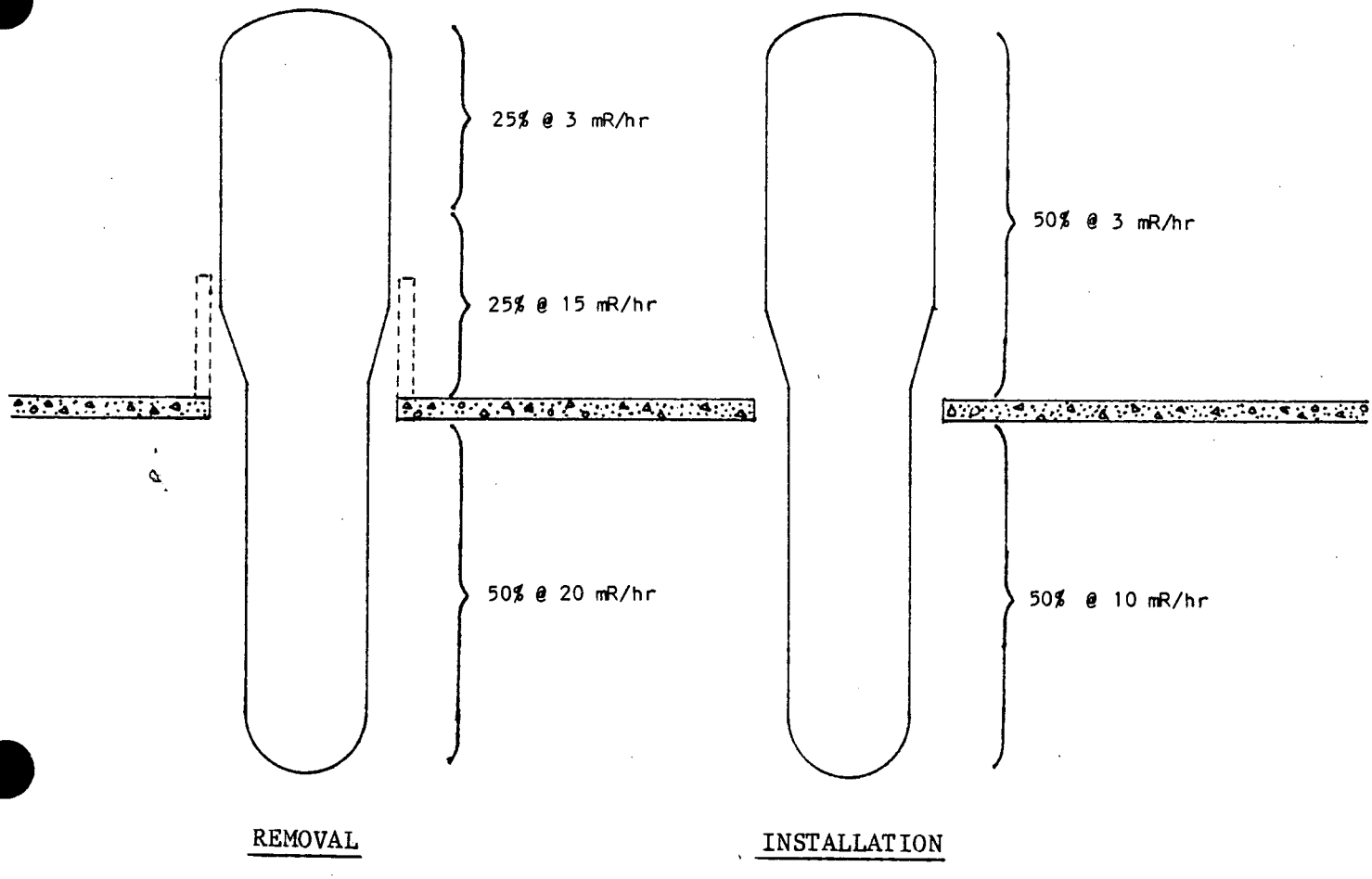

Removal

(7500 man-hours) (5/6) [(.25)(.003 R/hr) + (.25)(.015 R/hr) + (.50)(.020 R/hr)] (.93 rem/R) = 85 man-rem

Installation

(20,000 man-hours) (5/6) [(.50)(.003 R/hr) + (.50)(.010 R/hr)] (.93 rem/R) = 100 man-rem

Note that during insulation replacement, exposure rates were lower due to the absence of the old steam generator lower assembly. The time divisions were based directly on surface area covered by insulation.

A complete listing of man-rem-by-task estimates along with a total estimate is presented in Table 3.4-2.

After completion of the project, it is expected that annual personnel exposures will be reduced. Currently about 275 man-rem/year are expended as a

result of steam generator inspection and repair. Enhanced generator integrity should lower this to about 25 man-rem/year. This represents a reduction of about 250 man-rem/year and a dose pay-back period of about 9 years. While the projected savings in man-rem is not the prime motivating factor in the decision to replace the H. B. Robinson Unit 2 steam generators, it should be a positive benefit from a radiological standpoint. 1

3.4.8.2 System Nuclide Inventory

In addition to the man-rem assessment for on-site operating personnel, an off-site dose projection was performed. An estimate of activity released is directly related to the activity on site and its treatment prior to release. The major on-site nuclide sources consist of deposition on the steam generator primary sides, the general area surface contaminants, and the reactor coolant water. Each of these was considered separately.

a) Corrosion Product Deposition on Steam Generator Primary Side - To establish an inventory of corrosion products on the primary side of a typical H. B. Robinson steam generator, it is necessary to know the isotopic ratios of the gamma emitting nuclides present and the exposure rate inside the channel head cavity. This information was obtained from the spectral analysis of smear samples taken on the steam generator primary side and from direct readings made inside the channel head using a model 6112 Teletector. The analytical results along with activity levels 30 days after shutdown are shown in Table 3.4-3. Typical probe readings were ~ 10 R/hr.

To calculate nuclide inventory, it is assumed that the isotopes on the smear were present in the same ratios as on the steam generator surface and that the corrosion products were uniformly deposited on the channel head bowl, divider plate, and tube sheet.

Actual calculations were done by approximating the spherical channel head surface with a cylindrical surface as shown in the figure below.

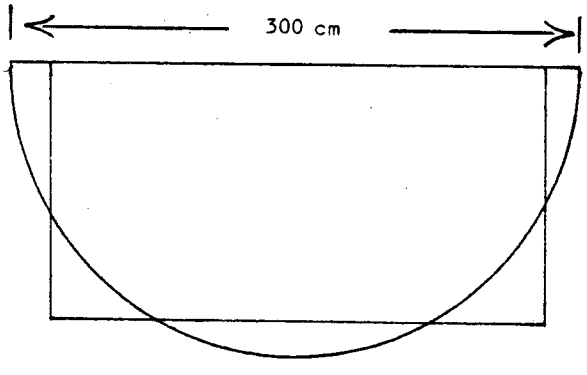

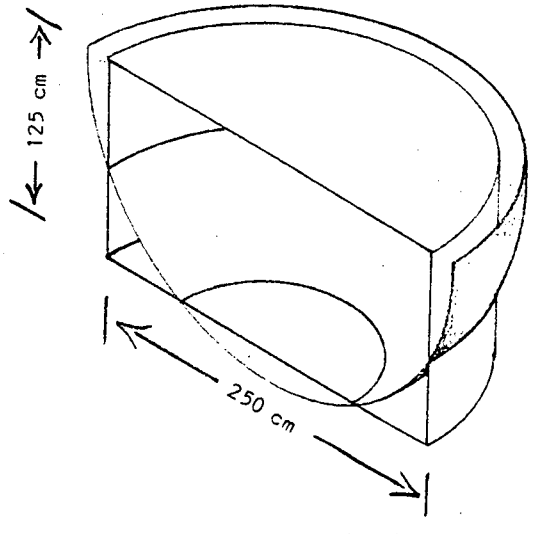

By dividing each side of the cylinder into a network of rectangular surface elements of area ΔA_i , the corrosion product layer can be treated like an array of point sources whose individual contributions to the overall exposure rate can be summed and set equal to the reading at the probe location.

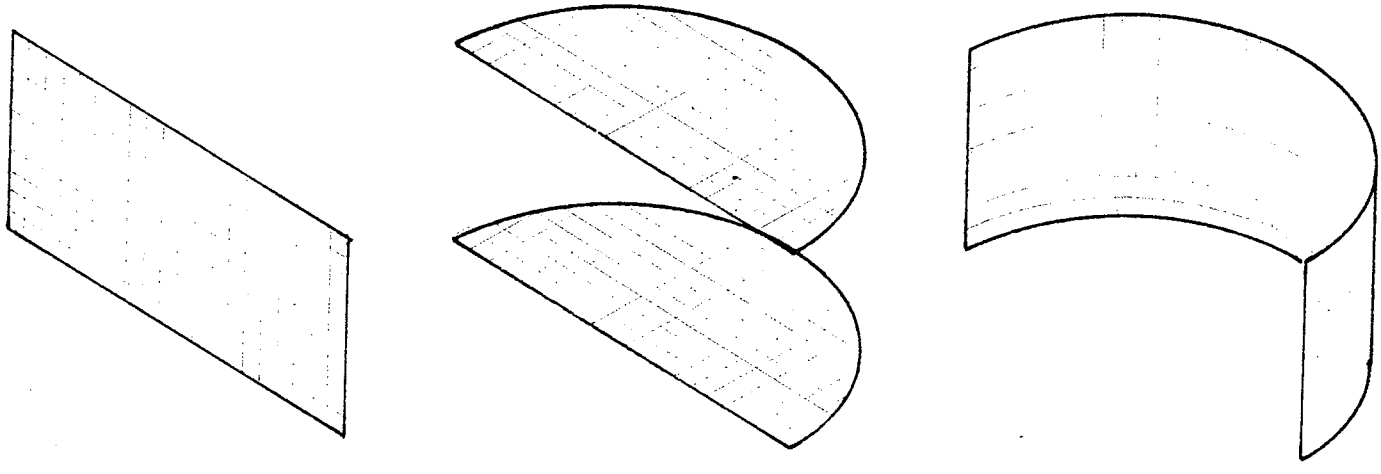

This process is summarized in the equation below.

$$10 \text{ R/hr} = \frac{C}{100} \sum_i \sum_j \sum_k \frac{(\Delta A_i)\ f_j\ \Gamma_j}{r_{ik}^{\ 2}}$$

where C = total activity in $\mu Ci/cm^2$

ΔA_i = rectangular grid area in cm^2 on i^{th} side

f_j = % of jth nuclide of the total activity

Γ_j = specific γ-ray constant of jth nuclide in $\frac{R}{hr \cdot \mu Ci}$ at 1 cm

r_{ik} = k^{th} grid-to-probe distance in cm for the ith side

The solution of this equation leads to the value 75.3 $\mu Ci/cm^2$ for the channel head activity. Specific nuclide activities are obtained by multiplying this figure by the respective abundance fractions. Activities inside the tube bundle were assumed to be 1/10 those in the channel head. The total quantity of corrosion products was then determined by multiplying the activities per cm^2 by the primary side surface area and summing. These results are presented in Table 3.4-4. Transuranics and fission products were either not present or were below the limits of detection.

b) General Area Surface Contaminants - Quantities of nuclides present on surfaces within the containment building were estimated on the basis of swipe surveys made at various locations. Typical transferable levels were approximately 10,000 dpm per 100 cm^2. Two assumptions were made in arriving at a total quantity of activity.

1) Nuclides present in containment were the same as the corrosion products found inside the channel head.

2) The ratio of transferable to fixed contamination was taken to be 10^{-4}. This is the same ratio found to exist on the channel head surface and, although not completely related, is similar in magnitude to measured resuspension factors (10^{-2} cm^{-1} to 10^{-6} cm^{-1}).

The average contamination levels were then calculated as follows:

$$\text{Activity}/m^2 = \left(10000 \frac{dpm}{100\ cm^2}\right)\left(\frac{1\ min}{60\ sec}\right)\left(\frac{1\ ci}{3.7x10^{10} dps}\right)\left(\frac{10^4 cm^2}{m^2}\right)\left(\frac{10^3 mCi}{Ci}\right)\left(10^4\right)$$
$$= 4.5\ mCi/m^2$$

The area involved was considered to contain:

1.	Operating Deck	600 m^2
2.	Steam Generators	600 m^2 (200 m^2 each)
3.	Pump Bay	900 m^2 (300 m^2 each)
4.	Equipment Hatch	125 m^2
5.	Miscellaneous Piping	800 m^2 (estimate)
		~ 3000 m^2

Hence, the total activity was estimated to be:

$$(4.5\ mCi/m^2)(3000\ m^2) = 13.5\ \text{Curies}$$

Table 3.4-5 presents a breakdown by percentage and activity of each nuclide assumed to be present.

c) Nuclide Inventory in Primary Coolant Water - An analysis of a typical reactor coolant water sample taken during operation yielded the information summarized in Table 3.4-6. The volume of coolant used in calculating total quantities was 2.5 x 10^8 cm^3 and all activities are decayed back to the time the sample was taken.

3.4.8.3 Gaseous and Liquid Effluent Releases to Public

The expected airborne activity released from the initial purge of the reactor containment and from the continuous purging of the reactor containment while the equipment hatch is open is 140 curies of activation and fission product

gases, 4.0E-5 curies of iodines, 9.0E-5 curies of particulates with half-lives greater than eight days and 7.0E-1 curies of tritium. These airborne activity amounts are typical of releases during refueling outages.

The main additional source of an airborne release will be from the separation cut at the channel head. During the cut, the channel head will be isolated from the general containment area by use of a temporary containment surrounding the area of the cut. These containments will include an air ventilation system which uses HEPA filters with a DF of 10^2. The airborne activity generated, then, is extracted from the reactor containment building, passed through a 10^2 efficiency HEPA filter system and exhausted to the environment. Thus a total DF of 10^4 is assumed for purposes of estimating off-site releases.

The total activity released depends on the activity/cm^2 that remains on the channel head after decontamination and the kerf width produced by the cutting tool. It is assumed that all such activity within the kerf boundaries is vaporized and becomes airborne. The calculation of this value and the necessary channel head cut dimensions are shown on Figure 3.4-2.

A breakdown by isotope is given in Table 3.4-7. These values are for all three generators.

For liquid effluents, there are three potential release sources:

a) Primary Coolant

b) Channel head decon rinse water

c) General area decon water

The activity released from the draindown of the reactor coolant system is calculated to be 1.26×10^{-4} Ci of activation and mixed fission products and 13.6 Ci of tritium. These values were obtained by decaying the radionuclides identified in the reactor coolant sample through two weeks which is approximately when draindown will occur after reactor shutdown. The inventory at this time is shown in Table 3.4-8.

It is assumed that the total volume is processed through the plant's radwaste system. H. B. Robinson's radwaste system uses evaporators to remove radioactivity from water before release or reuse. According to NUREG-0017, a decontamination factor (DF) of 10^4 is achieved for removal of activation and mixed fission products. All the tritium is assumed to be released.

For the channel head decon, only the rinse water may eventually be released to the environment as liquid. The gallons and activity of the rinse water will depend on the method chosen. If the fill and soak method is used, about 4300 gallons of rinse water containing 1.14E-5 curies will be sent to the radwaste system. If the mechanical method is employed, it is expected that 200 gallons of rinse water containing 2.11E-4 curies will be sent to the radwaste system. Thus, assuming a DF of 10^4 and the greater of the two possible curie amounts, the maximum liquid release activity to the public would be 2.11E-6 curies.

For the general area decon, a decontamination factor of 10 is assumed. Therefore, 12 curies from the general area is processed through the rad-waste system which has a decontamination factor of 10^4. Thus a total of 1.2×10^{-3} curies of activation and mixed fission products are released to the public from the decon of the general area. Total liquid effluent releases are presented in Table 3.4-9 and 3.4-9a.

For comparison, Table 3.4-10 gives the measured airborne and liquid releases during a typical operating month.

3.4.8.4 Off-Site Dose Projections

The off-site radiological impact of an airborne release can be evaluated by calculating the dose equivalent to both the critical organ (lung) and the whole body of a teenager (the critical age group). The calculation is performed at the most limiting site boundary location assuming a ground level release of 3.48 μCi derived in the previous section. Under these conditions the lung dose and whole body dose are 8.1×10^{-4} mRem and 1.8×10^{-6} mRem respectively.

The fundamental equation used in determining off-site doses is

$$D = \chi/Q \quad Q \quad DCF$$

Where D is the dose in rem, χ/Q is the atmospheric dispersion factor derived from the Gaussian Diffusion Model, Q is the source term, and DCF is the dose conversion factor.

3.4.8.5 Conclusions

From the foregoing examination of facilities, programs, provisions, and projections, it is concluded that Carolina Power & Light Company is adequately prepared to deal effectively with the variety of health physics activities that are anticipated in a project of this magnitude.

The radiological impact of the project is such that the overall expenditure of man-rem over the next nine years should be reduced. | 1

Finally, radiological releases to the environment and their concomitant off-site doses are less than those observed during periods of normal operation.

3.5 DISPOSITION OF STEAM GENERATOR LOWER ASSEMBLIES (SGLA)

The disposition of the SGLA is a separate operation of the S/G repair effort and, thus, is assessed separately. Five disposal options are considered within this section for the disposition of the steam generators. A description of each option including the costs, task descriptions, man-hours, man-rem, radioactive effluents, design specifications of buildings and structures, and health physics considerations is presented for each of the five options. This information is presented in this format so that the advantages and disadvantages can be viewed and weighed for each option. Thus, the optimum cost/man-rem option is more apparent.

Although many other disposal options exist, only the five most viable options were chosen to be included in this report. Other options were eliminated based on either prohibitive costs or man-rem, or unproven technological considerations.

3.5.1 SGLA HANDLING/DISPOSAL OBJECTIVES

Before considering various disposal options, objectives need to be clearly defined. These objectives should be used as the reference criteria when selecting the best option. These objectives also reflect the policies of Carolina Power & Light Company as well as the regulatory requirements and policies of the federal, state, and local governments which have responsibilities governing various aspects of the S/G repair effort.

The objectives of the disposal phase of S/G repair effort are:

a) Dispose of the SGLA safely and economically to ensure the protection of the workers and the public.

b) Minimize the occupational and public exposure to radiation by performing an ALARA review on every aspect of the disposal plan and ensuring that the radiological effluent released to the environment will be less than the 10 CFR 20 requirements.

c) Comply with all federal, state and local regulations. Some of the applicable regulations include 10 CFR 20, 10 CFR 71, 49 CFR 172-174, and 40 CFR 190.

3.5.2 DISPOSITION OPTIONS

Comparing costs, man-power, man-rem, radioactive effluent releases, and volume of radwaste generated, the five disposal options considered are:

a) Immediate intact off-site shipment without decontamination.

b) Immediate intact off-site shipment with decontamination.

c) Long-term intact on-site storage.

d) Immediate cut-up and off-site shipment with decontamination.

e) Immediate cut-up and off-site shipment without decontamination.

Other options are possible but these are the most practical and all have previously been evaluated by other utilities and government contractors.

3.5.2.1 Immediate Intact Off-Site Shipment without Decontamination

This option would dispose of the SGLA intact almost immediately upon exit from the reactor containment building (RCB) without decontaminating the tubes and tube sheets. The SGLA would be transported by rail and truck or exclusively by truck from the plant to the Chem-Nuclear facility at Barnwell, South Carolina, or by rail, truck, and barge to the U.S. Ecology facility at Richland, Washington.

Because the tube sheet and tubes will not be deconned, a shipping cask will be needed for transport. The exposure rates at contact with the shell of the steam generator is expected to be approximately 300 mR/hr. The curie content of each steam generator is calculated to be approximately 300 curies (see Section 3.4.8.2(a) for this calculation). These characteristics require the use of a shielded shipping cask in order to meet 10 CFR 71 package requirements and 49 CFR 173 exposure rate requirements for shipment of LSA radioactive material.

3.5.2.2 Immediate Intact Off-Site Shipment with Decontamination

This option is similar to the previous disposal option considered, however, the tubes and tube sheet are deconned before shipment off-site. The purpose of the deconning is to reduce the exposure rate from the SGLA. This will lower the man-rem from handling the SGLA and perhaps reduce the curie content of the SGLA to a point where a cask would not be needed.

The possible methods for decontaminating the channel are discussed in Section 3.4.1.1. If the decision is made to decon the tube sheet and tubes, the channel head will be deconned at the same time using the same process. Thus, in order to decon the complete primary side of the S/G at one time, the methods for deconning would be limited to a fill and soak procedure. Nevertheless, 15 percent of the tubes are plugged and subsequently cannot be deconned.

3.5.2.3 Long-Term Intact On-Site Storage

The third option considered for SGLA disposition is the placement of the SGLA into an on-site concrete vault for storage until decommissioning of the plant. The design for such a vault would be similar to that used by Florida Power & Light and Virginia Electric Power Companies for their SGLA interment. General specifications for the on-site storage building are discussed in Section 3.5.3.

3.5.2.4 Immediate Cut-Up and Off-Site Shipment with Decontamination

This option would involve deconning the SGLA in place before removal from the RCB and moving the SGLA to a cut-up facility on-site for sectioning into five pieces. The cut-up facility would be designed so that occupational and public exposure to radiation can be maintained ALARA.

Cut-up operations will be performed in enclosures to minimize the spread of airborne activity. These enclosures will be provided with a HEPA filtration system in order to reduce any potential airborne release to the public. Remote cutting techniques and temporary shielding will be employed during the cut-up operations.

3.5.2.5 Immediate, Cut-Up and Off-Site Shipment without Decontamination

The final option considered is the same as the previous option, however, deconning of the tube sheet and tubes would not be performed.

3.5.3 ONSITE STORAGE

An on-site storage building will house the three SGLA indefinitely. The final disposition will be decided upon at the time of decommissioning of Unit 2. The building will be completely enclosed with adequate wall thickness to reduce the exposure rate at the surface(s) of the building to less than 1 mrem/hr. The building will be provided with (1) access ports so that periodic exposure rates can be taken remotely and (2) a passive ventilation system to allow for the expansion and contraction of air within the vault. The SGLA openings will be sealed prior to removal from the RCB. This will prevent the release of radioactivity during transfer and storage and will preclude the need for an active ventilation system and periodic air sampling and smearing inside the storage building. The dose to the public from the transfer, storage, and ultimate shipment off site is estimated to be 0.4 man-rem. 1

3.5.4 OFFSITE SHIPMENT AND DISPOSAL

The off-site handling, transport, and burial operation is identical for each SGLA. The SGLA is removed from the RCB equipment hatch and loaded onto a railcar or semitrailer. The SGLA is transported to a temporary laydown area and unloaded onto a saddle. The SGLA is then loaded into the bottom half of a shipping cask. The cask will either be secured to a special truck-trailer or a railroad flatcar. The top half of the cask will be lowered into place, sealed, and secured. The cask and SGLA will then be transported to the burial site. At the site the cask will be opened and the SGLA off-loaded and placed into a burial trench. The shipping cask will then be returned to the plant and this cycle will be repeated for the second and third SGLA. The dose to the public from the transfer, storage, and ultimate shipment offsite is estimated to be the same as the onsite storage option. 1

3.5.4.1 Cask Description

The cask is cylindrical in shape and is made of 2 1/2" carbon steel (ASM-A 516, grade 70). The two welded end plates are made of 2 3/4" steel, reinforced by steel ribs.

The cask is composed of two halves, split lengthwise at the centerline. Within the lower half of the cask are two saddles, 24 feet apart, to support the steam generator. When a SGLA is lowered inside the bottom half of the cask, two tie-down straps secure the SGLA to the cask, then the top half is lowered to close the cask. The centerline joint is sealed with an elastomer gasket on a 6" x 2 1/2" bolted flange. One hundred and twelve (112) high-strength bolts, 2 inches in diameter, are used to secure the top half of the cask to the bottom.

The bottom half of the cask is welded to two external saddles (placed directly underneath the two saddles inside the cask). The external saddles are secured to the trailer or railcar.

The cask is designed to meet stringent design criteria for such parameters as load resistance, pressure, temperature, vibration, and penetration. The NRC has issued a Certificate of Compliance, Number 9144, for this cask.

3.5.4.2 Burial

All but one of the options would bury the SGLA shortly after removal from the RCB. The SGLA would be buried in one of two low-level waste sites, either at the Barnwell, South Carolina site or Richland, Washington site. The SGLA will be buried the same way as other low-level radioactive material is buried, the only exception being that a special trench ramp is constructed specifically for placement of the SGLA. All burial operations will be in compliance with the specific burial site license criteria. 1

3.5.4.3 Transportation Route(s)

The modes and routes for transportation will vary depending upon the disposal option chosen. In general all land travel will be provided by truck and/or railcar and all water travel by barge. 1

If Option 3 is chosen, all transportation will be by use of a special tractor-trailer arrangement for hauling from the RCB to the storage vault. No shipping cask will be needed.

For all four of the other options, the mode and route of transportation would depend on the destination of the SGLA. If the SGLA is buried in South Carolina then the SGLA or parts of the SGLA will be loaded into casks and transported via special tractor-trailers and/or railcars. If the SGLA is disposed of in the state of Washington, in addition to the special tractor-trailer and/or railcar transport, an ocean-going tug will make the trek from South Carolina to Washington via the Atlantic and Pacific oceans. 1

3.5.5 DECONTAMINATION

As previously stated in Section 3.4, two methods for deconning the S/G channel head and divider plate are being investigated. However, when consideration is given to deconning the tube sheet and tubes in place, all but the chemical fill and soak method can be excluded. 1

Two types of chemical fill and soak methods exist. One is a soft chemical cleaning process with expected DF of 5-10, and the other is a hard chemical process with possible DF of 20-200.

The contamination in the S/G is primarily made up of activation products which have bonded with the stainless steel and inconel to form a tenacious film. The removal of this film is difficult and requires the use of special deconning fluids. The objectives of the decon is to remove the contamination so that the exposure from handling the SGLA will be lessened and the SGLA may possibly be shipped without a cask. Although this method is very effective, the surface of the channel head must be left unharmed so that it can be reused and the benefit of lower man-rem and handling costs of a deconned SGLA must be weighed against the man-rem and disposal cost of the contamination removed from the SGLA. 1

3.5.5.1 Radioactive Waste Generation

Options 1 and 3 will not add any significant amount of waste to that generated during the total S/G repair effort. Options 2 and 4 will generate approximately 5000 cubic feet of solidified deconning fluid and resins. Options 2, 4, and 5 will all generate additional dry active waste because of the increased handling of either deconning equipment and/or SGLA parts.

3.5.6 COSTS

The cost for each option is estimated to be:

Option	Cost
1. Immediate intact off-site shipment without decontamination	$2,870,000
2. Immediate intact off-site shipment with decontamination	$3,361,000
3. Long-term intact on-site storage	$ 738,000
4. Immediate cut-up and off-site shipment with decontamination	$5,396,000
5. Immediate cut-up and off-site shipment without decontamination	$5,637,000

The transportation and burial costs incorporated into Options 1, 2, 4, and 5 are those costs for transport and burial at the Barnwell, South Carolina site. The cost estimates of these options would all be increased uniformly if the SGLA were buried at the Richland, Washington site. The estimated cost for Option 3 does not include costs for the ultimate disposal of the SGLA.

3.5.7 MAN-REM ASSESSMENT

Based on CP&L's estimates as well as previous estimates and actual exposure results from Surry and Turkey Point, the following man-rem estimates for the five options are:

OPTION	MAN-REM
1. Immediate intact off-site shipment without decontamination	30-50
2. Immediate intact off-site shipment with decontamination	40-70
3. Long-term intact on-site storage	10-20
4. Immediate cut-up and off-site shipment with decontamination	175-350

5.	Immediate cut-up and off-site shipment without decontamination	550-1650

3.5.8 RADIOLOGICAL RELEASES AND OFF-SITE DOSE ASSESSMENT

CP&L's projections of radiological releases and subsequent off-site dose commitment for the five options are:

	OPTION	AIRBORNE RELEASE (μCi)	DOSE COMMITMENT (REM) LUNG	WB
1.	Immediate intact off-site shipment without decontamination	--		--
2.	Immediate intact off-site shipment with decontamination	--		--
3.	Long-term intact on-site storage	--		--
4.	Immediate cut-up and off-site shipment with decontamination	8.4E-5	2.0E-5	4.5E-8
5.	Immediate cut-up and off-site shipment without decontamination	3.6E-4	8.4E-5	1.9E-7

Options 1-3 would not involve the release of airborne radioactivity because the SGLA are intact and all openings are sealed before remmoval from the RCB. Thus, all the activity either is sealed within the SGLA or some fraction of the activity is removed by the liquid deconning solution and treated as a solid waste.

Options 4 and 5 would cut up the SGLA into approximately five parts and in the process create a possible source term of 8.5E-5 Curies for Option 4 and 3.6E-4 curies for Option 5.

The source term for Option 5 was derived using the same method as discussed in Section 3.4.8.3 except the activity of contamination within the tube was taken as 7.53 $\mu ci/cm^2$ from Table 3.4-4 and the total area assumed to be vaporized is 4.03E5 cm^2. This area is based on four cuts of 6520 tubes. The rest of the calculation is the same.

Option 4 is the same as Option 5 except a DF of 10 is assumed for 85 percent of the tubes, and no DF is assumed for 15 percent of the tubes since they are plugged and would not be deconned; thus, a different contamination activity is assumed.

As was the case in Section 3.4.8.4, the critical age group is the teenager and the critical organ is the lung. Under the worst meteorological conditions where the χ/Q value is 1.7E-3 sec/m^3, the projected doses to the lung and the whole body of the critical age group are 2.0E-5 and 4.5E-8 rem for Option 4 and 8.4E-5 and 1.9E-7 rem for Option 5.

3.5.9 HP SURVEILLANCE

The degree and type of health physics coverage is different for the various options. Options 1-3 leave the steam generator intact and thus pose only an external radiation exposure hazard. Options 4 and 5 involve the cutting of contaminated tubes and thus would pose a contamination and airborne hazard in addition to much higher external radiation exposure. All five of the options will require preplanning for deconning and fixing or preventing the spread of contamination from the external surface of the SGLA.

The ALARA principle will be put into practice and the health physics coverage will follow the same practices as specified in Section 3.4.1 for the actual S/G replacement work. 1

The use of enclosed work containments to control contamination and minimize the release of airborne radioactivity is planned if either Option 4 or 5 are chosen. All enclosures used for this purpose will employ a ventilation system fitted with HEPA filters.

3.5.10 CONCLUSIONS

Table 3.5-1 summarizes the projected consequences for all the options. Based on the findings of this comparison study, Carolina Power & Light Company will proceed with Option 3, long-term intact on-site storage. This option presents the best overall cost and man-rem expenditure relative to all the other possible options. 1

Options 4 and 5 are excluded because of the costs of cutting up the SGLA and the much higher man-rem expenditures associated with the cut-up operation. Option 1 was excluded because of the costs and the logistic difficulties of shipping the SGLA off site. Option 1 may again be considered in the future, however, if these difficulties diminish in magnitude. 1

Option 2 was considered because of the possibility of removing enough contamination to preclude the use of a shipping cask and reduce the man-rem from handling and transporting the SGLA. However, upon evaluation it was determined that no matter how effective the decontamination process is, 15 percent of the tubes cannot be deconned since they are plugged and thus a shipping cask will still be required according to the 10 CFR 71 requirements. Also, the man-rem to decon and process the waste from the SGLA plus the man-rem from handling the decontaminated SGLA is the same as handling the SGLA without decontamination. The other potential problems of chemical deconning (i.e., spills, integrity of reusable parts, and disposal problems) also create a great deal of uncertainty about this option. For these reasons, Option 2 was also excluded. 1 1

3.6 PLANT SECURITY

The provisions of Chapter 9 of the HBR2 Industrial Security Plan, which require that the level of security provided during major maintenance operations not result in an increased likelihood of an act of radiological sabotage, will be observed. If necessary, a revision to the existing security plan will be developed and specific procedures will be developed which will address the security aspects of the work being performed. If the regulations

in effect at the time of the outage permit, and appropriate approvals are obtained, selected equipment and or areas which had been considered to be

vital equipment and/or vital areas during normal operations would be redesignated as non vital during the outage providing there was not an increase in the likelihood of an act of radiological sabotage.

3.7 QUALITY ASSURANCE

This section describes the quality assurance program to be used for the manufacture and replacement of the steam generators at HBR2. The repair effort will be performed under the guidance of the CP&L Corporate Quality Assurance Program, and the Operational Quality Assurance Program which was submitted to the NRC on March 18, 1981 and August 4, 1981. These programs were approved by an NRC letter dated September 24, 1981, from Mr. Thomas A. Ippolito (NRC) to Mr. J. A. Jones (CP&L).

The manufacture of the lower steam generator assemblies will be conducted under the Westinghouse QA program that is in compliance with the ASME Boiler and Pressure Vessel Code, Section III, Subsections NCA 3800 and 4000; Appendix B of 10 CFR 50; WCAP 8370, Revision 9A, Amendment 1; and QPS-120-1.

TABLE 3.4-1

HBR's PORTABLE RADIATION SURVEY INSTRUMENTS

INSTRUMENT	NO	DETECTOR	RADIATION DETECTED	SENSITIVITY	SCALES	RANGE	USE
Eberline Teletector #6112B	27	GM	βγ	.2 mR/hr	5	0-1000 R/hr	Surveys Low-High Radiation Areas
Eberline #PIC-6A	20	Gas Filled Ion Chamber	γ	2 mR/hr	3	1mR/hr-1000R/hr	Surveys Med.-High Radiation Areas
Eberline #RO-2A	6	Ion Chamber	βγ	2 mR/hr	4	0-50 R/hr	Surveys Med.-High Radiation Areas
Eberline Rate Meter #E-520	1	GM	βγ	50 cpm	5	0-2500 Kcpm	Contamination Surveys
Eberline Rate Meter #E-120	1	GM	βγ	50 cpm	3	0-50 Kcpm	Contamination Surveys
Ludlum Rate Meter #5	8	GM	γ	.1 mR/hr	5	0-2 R/hr	Surveys Low-Med. Radiation Areas
Ludlum Rate Meter #3	7	GM	βγ	50 cpm	4	0-500 Kcpm	Contamination Surveys
Ludlum Rate Meter #2	4	GM	βγ	50 cpm	3	0-50 Kcpm	Contamination Surveys

TABLE 3.4-1 (Continued)

HBR's PORTABLE RADIATION SURVEY INSTRUMENTS

INSTRUMENT	NO	DETECTOR	RADIATION DETECTED	SENSITIVITY	SCALES	RANGE	USE
Ludlum Rate Meter #L-177	17	GM	βγ	50 cpm	4	0-500 Kcpm	Personnel and Equipment Contamination Surveys
Eberline Rate Meter #RM-14	10	GM	βγ	50 cpm	3	0-50 Kcpm	Personnel and Equipment Contamination Surveys
Victoreen #490 THYAC III	3	Scint. NAI	γ	50 cpm	4	0-800 Kcpm	Contamination and Area Radiation Surveys
Eberline Rate Meter & Scaler	5	Scint. α #AC-3-7	α	~$2x10^7$ cpm/μCi/cm^2 with Pu-239	NA	0-$1x10^7$ cpm	Alpha Contamination Surveys
Single Channel Analyzer #PRS-1		GM #HP-210	βγ	~5 Kcpm/mR/hr with Co-60	NA	0-200 Kcpm	Personnel and Equipment Contamination Surveys
		Scint. NAI #SPA-3	γ	~1200 Kcpm/mR/hr with Cs-137	NA	0-$1x10^7$ cpm	Contamination and Area Radiation Surveys
		Scint. NAI #LEG	γ	~2000 Kcpm/mR/hr with 60 KEV	NA	0-$1x10^7$ cpm	Low Energy γ Cont. and Area Radiation Surveys
		GM #HP-270	βγ	~1.2 Kcpm/mR/hr with Cs-137	NA	0-200 Kcpm	Personnel and Equipment Contamination Surveys
		GM #HP-290	γ	~80 cpm/mR/hr with Cs-137	NA	0-200 Kcpm	Survey Medium Radiation Areas

TABLE 3.4-2

MANREM ASSESSMENT FOR THE
H. B. ROBINSON UNIT 2 STEAM GENERATOR
REPLACEMENT PROJECT

TASK DESCRIPTION	ESTIMATED TASK TIME IN MANHOURS	ESTIMATED MAN-REM
1. Construction of pedestal cranes, preparation of polar crane, miscellaneous cribbing platforms, and steam generator transfer platform.	10,000	25
2. Initial containment decontamination	2,000	20
3. Concrete and structural steel removal and replacement	8,000	20
4. Defueling and fuel storage	1,000	40
5. Installation and removal of shielding	2,500	145
6. Installation, maintenance and removal of scaffolding, temporary lighting and power	35,000	185
7. Installation, maintenance, and removal of contamination containments and temporary ventilation systems	4,500	30
8. Removal of insulation	7,500	85
9. Removal of mainsteam piping	500	5
10. Removal of feedwater piping	2,500	5
11. Removal of miscellaneous piping	6,000	70
12. Cutting and removal of steam generator upper assembly	7,000	80
13. Cutting of channel head	4,000	95
14. Weld shield cover on lower assembly at:		
(a) channel head	900	10
(b) transition end	600	10
15. Removal of steam generator lower assembly	500	25
16. Lateral support ring removal	2,000	25
17. Channel head decontamination	4,500	105
18. Refurbishment of upper assembly	8,000	20

TABLE 3.4-2 (Continued)

TASK DESCRIPTION	ESTIMATED TASK TIME IN MANHOURS	ESTIMATED MAN-REM
19. Installation of lower assembly prep and weld channel head	40,000	310
20. Weld divider plates	5,000	80
21. Installation and welding of upper assembly	6,500	15
22. Lateral support ring installation	6,000	45
23. Install main steam piping	2,000	5
24. Install feedwater piping	5,000	10
25. Install insulation	20,000	100
26. Install miscellaneous piping	10,000	75
27. Non manuals, (HP, QA, engineering, supervision, administration, etc.)	60,000	295
28. On going decon/cleanup and disposal of contaminated material	28,000	150
29. Miscellaneous testing/inspections	2,500	5
30. Steam generator storage activities	1,000	30
TOTAL	293,000	2120

TABLE 3.4-3

ANALYSIS OF CORROSION PRODUCTS
ON SMEAR OF PRIMARY SIDE OF CHANNEL HEAD 1

			At Time of Analysis		30 Days After Shutdown	
Nuclide	Half-Life (da)	$\Gamma j \frac{R}{hr \quad \mu Ci}$	μCi	%	μCi	%
Cr-51	27.8	1.6E-4	1.843E-3	0.6	2.23E-2	4.43
Mn-54	312.5	4.7E-3	3.399E-3	1.1	4.24E-3	0.84
Co-57	270.0	9.0E-4	3.394E-4	0.1	4.39E-4	0.1
Co-58	71.3	5.5E-3	9.868E-2	32.0	2.61E-1	52.0
Co-60	1919.9	1.3E-2	2.030E-1	66.0	2.10E-1	41.0
Nb-95	35.2	4.2E-3	6.476E-4	0.2	4.65E-3	1.0
Sn-113	115.3	1.7E-3	2.135E-4	0.1	3.89E-4	0.1
		Totals	.308	100%	.503	100%

TABLE 3.4-4

ESTIMATED CORROSION PRODUCT INVENTORY
ON STEAM GENERATOR PRIMARY SIDE
APPROXIMATELY 30 DAYS AFTER SHUTDOWN

Nuclide	Half-Life Days	% of Total Activity	Activity ($\mu Ci/cm^2$)		Total Activity (Ci)	
			Channel Head	Tubes	Channel Head	Tubes
Cr-51	27.8	4.43	3.34	.33	.88	12.7
Mn-54	312.5	.84	.63	.06	.17	2.3
Co-57	270.0	.09	.07	.01	.02	.4
Co-58	71.3	51.89	39.07	3.91	10.31	150.9
Co-60	1919.9	41.75	31.44	3.14	8.30	121.2
Nb-95	35.2	.92	.69	.07	.18	2.7
Sn-113	115.3	.08	.06	.01	.02	.4
	Totals	100.0	75.3	7.53	19.9	290

TABLE 3.4-5

GENERAL AREA SURFACE CONTAMINATION ACTIVITY

Nuclide	Half-Life (days)	% Abundance	Activity (Ci)
Cr-51	27.8	4.43	.60
Mn-54	312.5	0.84	.11
Co-57	270.0	0.1	.01
Co-58	71.3	52.0	7.02
Co-60	1919.9	41.0	5.54
Nb-95	35.2	1.0	.14
Sn-113	115.3	0.1	.01
	Totals	100%	13.5 Curies

TABLE 3.4-6

TYPICAL PRIMARY COOLANT INVENTORY

CLASS	NUCLIDE	HALF-LIFE	% ABUNDANCE	$\mu Ci/cm^3$	TOTAL ACTIVITY (μCi)
Fission Gases	Kr-85m	4.48H	0.11	3.34E-04	8.51E+04
	Kr-87	78.00M	0.09	2.93E-04	7.47E+04
	Xe-133	5.29D	0.49	1.52E-03	3.87E+05
	Xe-135	9.10H	0.94	2.92E-93	7.44E+05
	Xe-135m	15.60M	0.47	1.47E-03	3.75E+05
Activation Gases	Ar-41	1.83H	0.86	2.69E-03	6.86E+05
Fission Products	Br-83	2.40H	10.39	3.23E-02	8.23E+06
	Cs-138	32.20M	1.63	5.07E-03	1.29E+06
	I-131	8.06D	0.09	2.94E-04	7.49E+04
	I-132	2.30H	0.94	2.91E-03	7.42E+05
	I-133	20.30H	0.85	2.63E-03	6.70E+05
	I-134	53.00M	1.68	5.21E-03	1.33E+06
	I-135	6.70H	1.28	3.98E-03	1.01E+06
	Nb-95	35.10D	0.06	1.89E-04	4.82E+04
	Ru-106	367.00D	1.50	4.66E-03	1.19E+06
Activation Products	Co-60	5.26Y	0.13	4.10E-04	1.04E+05
	F-18	110.00M	44.37	1.38E-01	3.52E+07
	Mn-56	2.57M	1.42	4.42E-03	1.13E+06
	Na-24	15.03H	25.40	7.90E-02	2.01E+07
Tritium	H-3	12.33Y	7.36	2.29E-02	1.36E+07
		Totals	100%	3.11E-01	8.71E+07

TABLE 3.4-7

CHANNEL HEAD ACTIVITY

NUCLIDE	HALF-LIFE (days)	% ABUNDANCE	ACTIVITY (μCi)
Cr-51	27.8	4.43	.15
Mn-54	312.5	0.84	.03
Co-57	270.0	0.1	.01
Co-58	71.3	52.0	1.80
Co-60	1919.9	41.0	1.45
Nb-95	35.2	1.0	.03
Sn-113	111.3	0.1	.01
	Totals	100%	3.48 μCi

TABLE 3.4-8

REACTOR COOLANT INVENTORY AFTER
14 DAYS OF DECAY

NUCLIDE	HALF-LIFE	TOTAL ACTIVITY (Ci)
Co-60	5.26 yr	1.04 E-03
Nb-95	35.1 da	3.66 E-02
Ru-106	367 da	1.14 E-00
I-131	8.06 da	2.25 E-02
Xe-133	5.29 da	6.18 E-02
H-3	12.3 yr	13.6 E-00

TABLE 3.4-9

PROJECTED LIQUID EFFLUENT RELEASES
FOR ACTIVATION AND MIXED FISSION PRODUCTS

Nuclide	Half-Life (Days)	Channel Head Decon Water (Ci)	Containment Decon Water (Ci)	Reactor Coolant Water (Ci)
Cr-51	27.8	9.28E-8	5.40E-5	----
Mn-54	312.5	1.79E-8	9.90E-6	----
Co-57	270.0	2.11E-9	9.00E-7	----
Co-58	71.3	1.08E-6	6.32E-4	----
Co-60	1919.3	8.74E-7	4.97E-4	1.04E-7
Nb-95	35.2	1.90E-8	1.26E-5	3.66E-6
Ru-106	367	----	----	1.14E-4
Sn-113	115.3	2.11E-8	9.00E-7	----
I-131	8.1	----	----	2.25E-6
Xe-133	5.3	----	----	6.18E-6
Total		2.11E-6	1.21E-3	1.26E-4

TABLE 3.4-9a

PROJECTED LIQUID EFFLUENT RELEASES
FOR TRITIUM

Nuclide	Half-Life (Days)	Channel Head Decon Water (Ci)	Containment Decon Water (Ci)	Reactor Coolant Water (Ci)
H-3	1800.5	--	--	13.6

TABLE 3.4-10

TYPICAL MONTHLY EFFLUENT RELEASES

CLASS	NUCLIDE	HALF-LIFE	LIQUID RELEASES (Ci)	GASEOUS RELEASES (Ci)
Fission Gases	Xe-133	5.29D	0.00E+00	1.03E+01
	Xe-133m	2.26D	----	8.18E+00
	Xe-135	9.10H	4.90E-04	0.00E+00
	Xe-135m	15.60M	2.11E-03	----
Activation Gases	Ar-41	1.83H	1.71E-03	7.92E+00
Fission Products	Cs-137	30.20Y	----	----
	I-131	8.06D	3.89E-04	1.97E-06
	I-133	20.30H	2.32E-03	5.53E-06
	I-135	6.70H	----	0.00E+00
	Ru-103	39.80D	3.54E-06	----
Activation Products	Co-58	71.4D	0.00E+00	----
	Co-60	5.26Y	1.52E-04	5.36E-06
	Na-24	15.03	1.06E+00	0.00E+00
Tritium	H-3	12.33Y	7.59E+00	0.00E00

1

TABLE 3.5-1

COMPARISON OF OPTIONS

	OPTION	COST ($)	MAN-HOURS	MAN-REM (REM)	AIRBORNE ENVIRONMENTAL RELEASE (Ci)	DOSE (REM) LUNG	DOSE (REM) WB	RAM WASTE GENERATED (FT^3)
(1)	Immediate intact off-site shipment without decontamination	2,870,000	2,900	30-50	-	-	-	-
(2)	Immediate intact off-site shipment with decontamination	3,361,000	3,500	40-70	-	-	-	5,000
(3)	Long Term intact on-site storage	738,000*	2,000	10-20	-	-	-	-
(4)	Immediate cut-up and off-site shipment with decontamination	5,396,000	17,000	175-350	8.5 E-5	2.0 E-5	4.5 E-8	5,000 plus**
(5)	Immediate cut-up and off-site shipment without decontamination	5,637,000	32,000	550-1650	3.6 E-4	8.4 E-5	1.9 E-7	plus**

* Costs for ultimate disposal of the S/G are not included in this estimate.

** Some undetermined amount of DAW from cut-up operations.

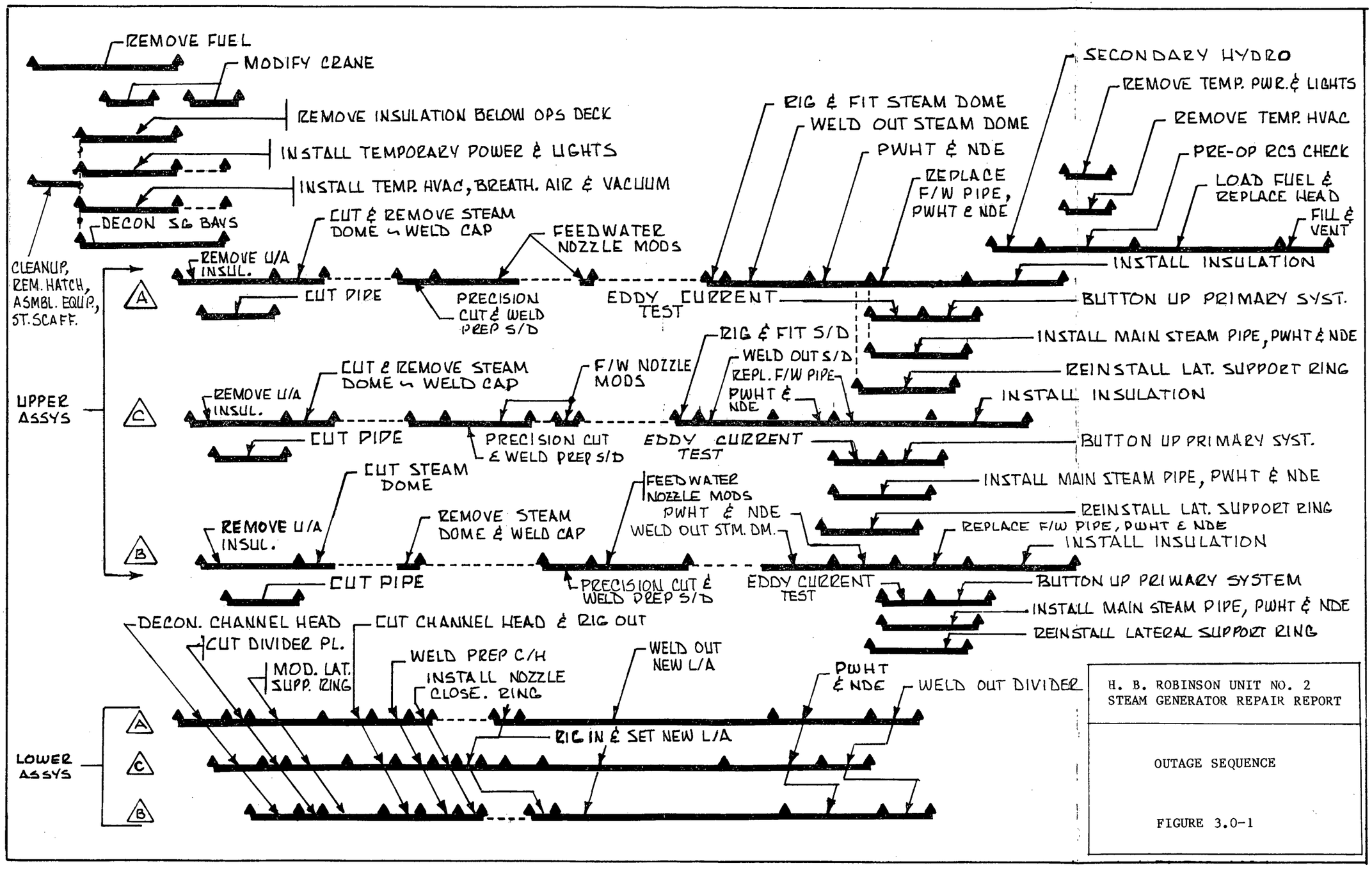

H. B. ROBINSON UNIT NO. 2
STEAM GENERATOR REPAIR REPORT

OUTAGE SEQUENCE

FIGURE 3.0-1

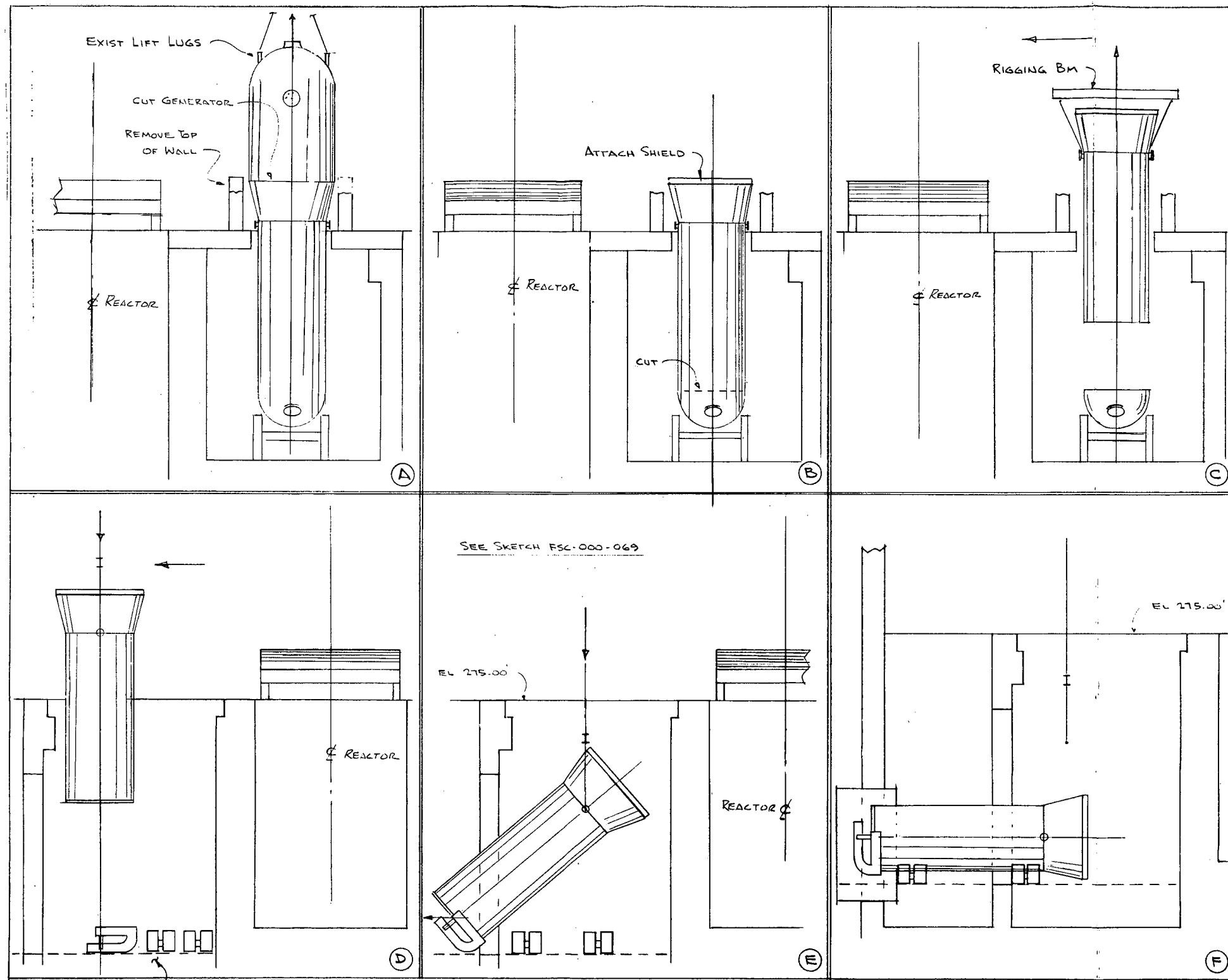

NOTES

FRAME 'A'

REMOVE APPROX. 3'-0 OF UPPER PORTION OF GENERATOR BIOLOGICAL SHIELD WALL - ATTACH RIGGING - CUT UPPER DOME LOOSE -

FRAME 'B'

LIFT AND REMOVE UPPER DOME FROM CONTAINMENT - ATTACH RADIATION SHIELD TO TOP OF LOWER ASSEMBLY WHILE IT'S STILL IN PLACE - CUT LOWER ASSEMBLY AT BASE -

FRAME 'C'

LIFT LOWER ASSEMBLY TO OPERATING FLOOR LEVEL AND ATTACH RADIATION SHIELD TO BOTTOM OF ASSEMBLY WHILE SUPPORTED BY CRANE - MOVE TO FLOOR OPENING.

FRAME 'D'

LOWER THE ASSEMBLY THRU FLOOR OPENING TO DOWNENDING ASSY.

FRAME 'E'

AFTER DOWNENDING ASSY. IS FASTENED, THE BOTTOM WILL BE WINCHED TOWARD THE EQUIPMENT EXIT HATCH -

FRAME 'F'

WITH ASSEMBLY RESTING ON LOW PROFILE SADDLES AND MULTI-TON ROLLERS, THE RIGGING WILL BE DETACHED AND LOWER ASSEMBLY WILL BE ROLLED OUTSIDE.

REVISION NO. 1
STEAM GENERATOR REPAIR REPORT

CAROLINA POWER & LIGHT CO.
H.B. ROBINSON STEAM ELECTRIC PLANT

REMOVAL SEQUENCE OF LOWER ASSY.
FIGURE 3.0-2

FIGURE 3.0-3 DELETED BY REVISION NO. 1

SECTION "A"-"A"

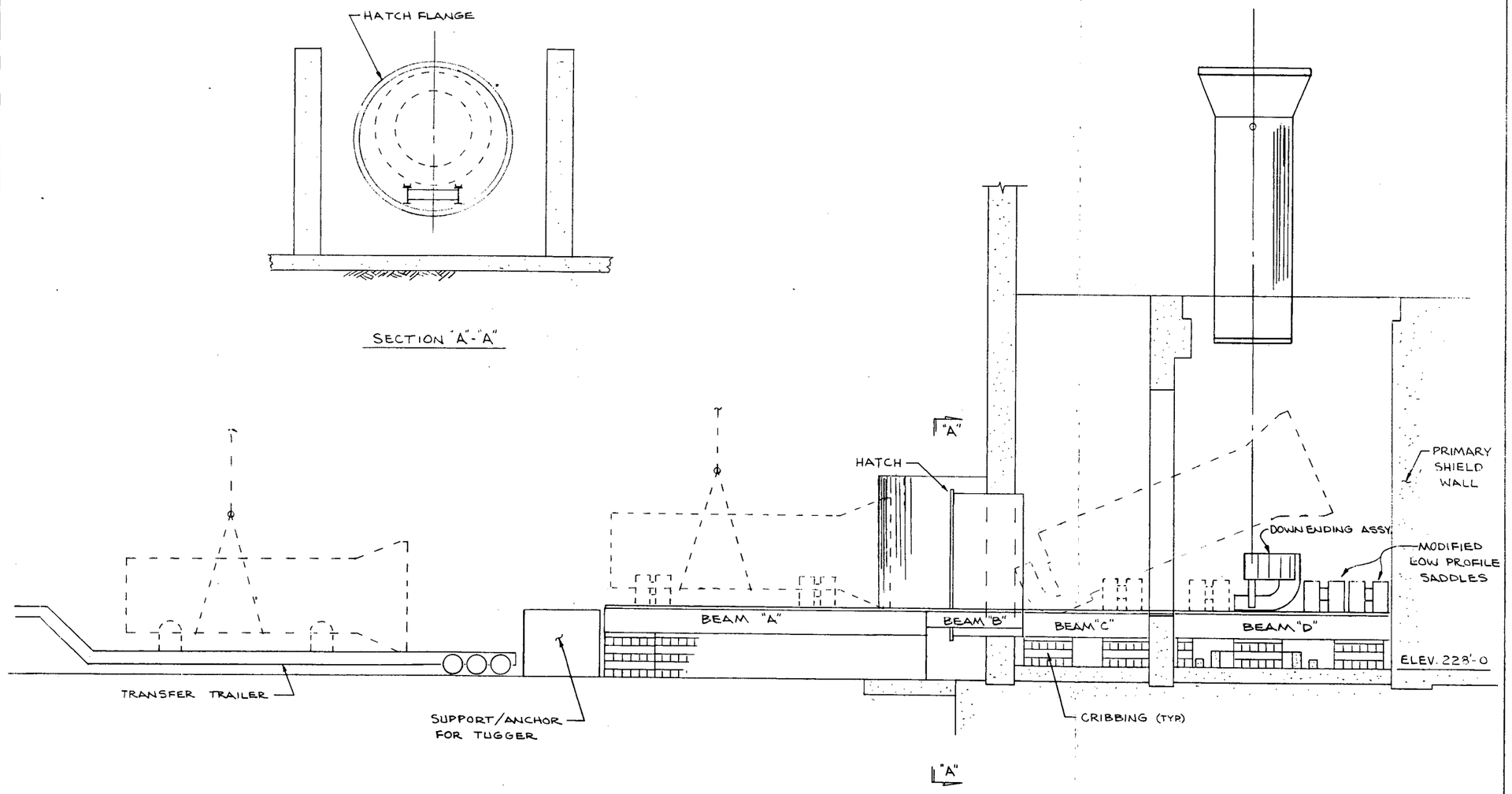

REVISION NO. 1
STEAM GENERATOR REPAIR REPORT

CAROLINA POWER AND LIGHT COMPANY
H.B. ROBINSON PLANT - CONSTRUCTION

REMOVAL THROUGH HATCH

FIGURE 3.0-4, SHEET 1

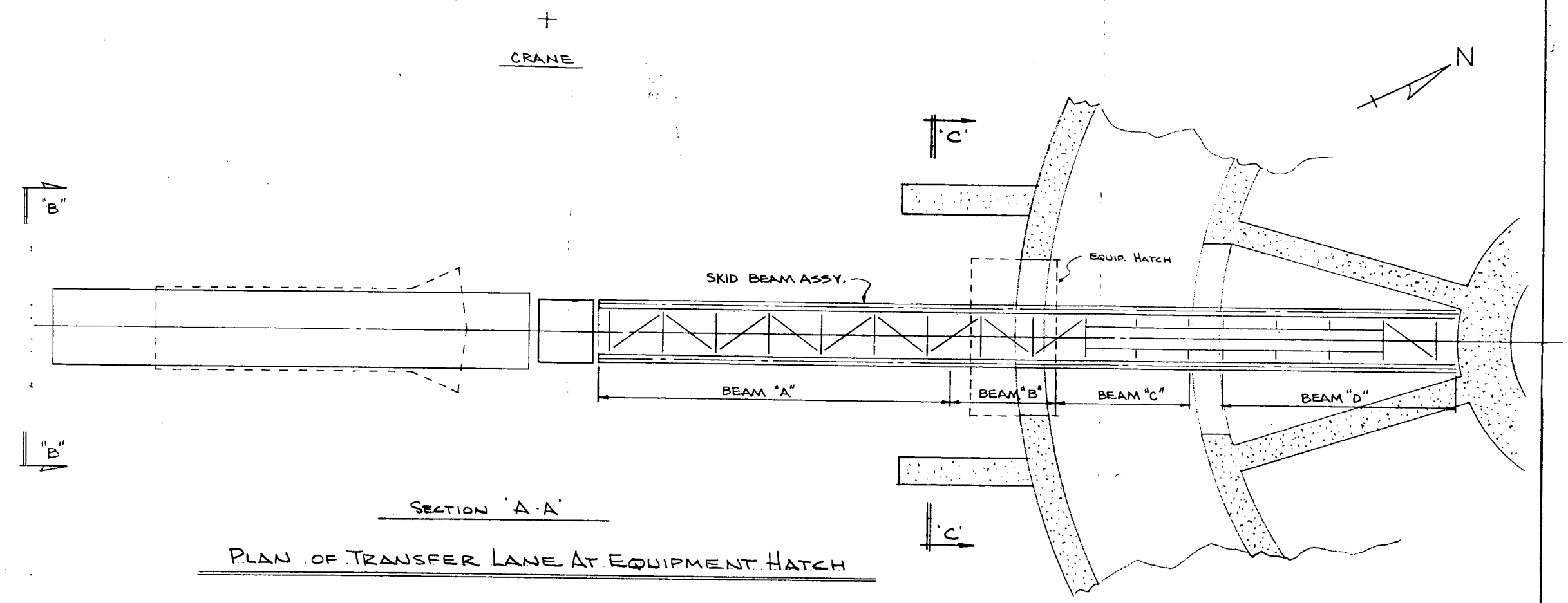

SECTION 'A-A'

PLAN OF TRANSFER LANE AT EQUIPMENT HATCH

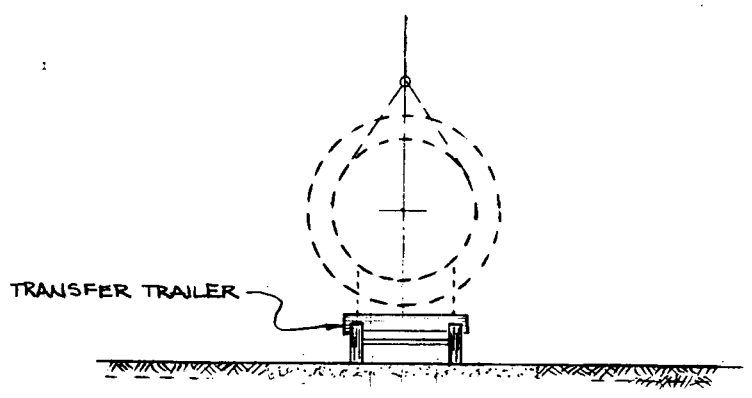

SECTION 'B-B'

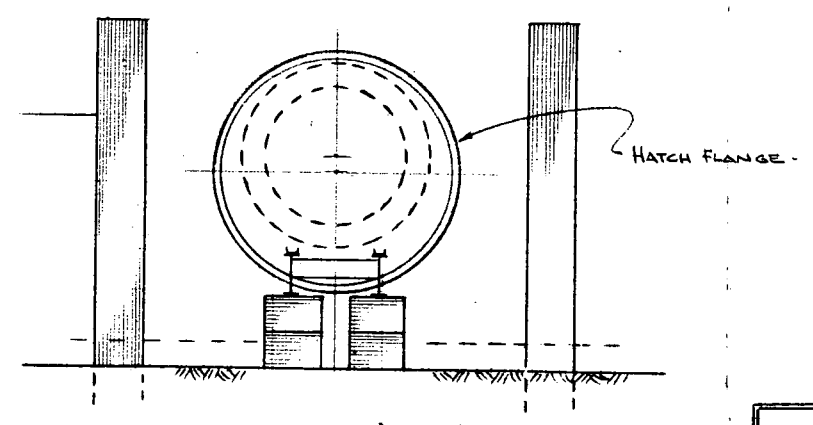

SECTION 'C-C'

RE: SKETCH FSC-000-069
REVISION NO. 1
STEAM GENERATOR REPAIR REPORT

CAROLINA POWER & LIGHT CO.
H.B. ROBINSON STEAM ELECTRIC PLANT

REMOVAL THROUGH HATCH
FIGURE 3.0-5, SHEET 2

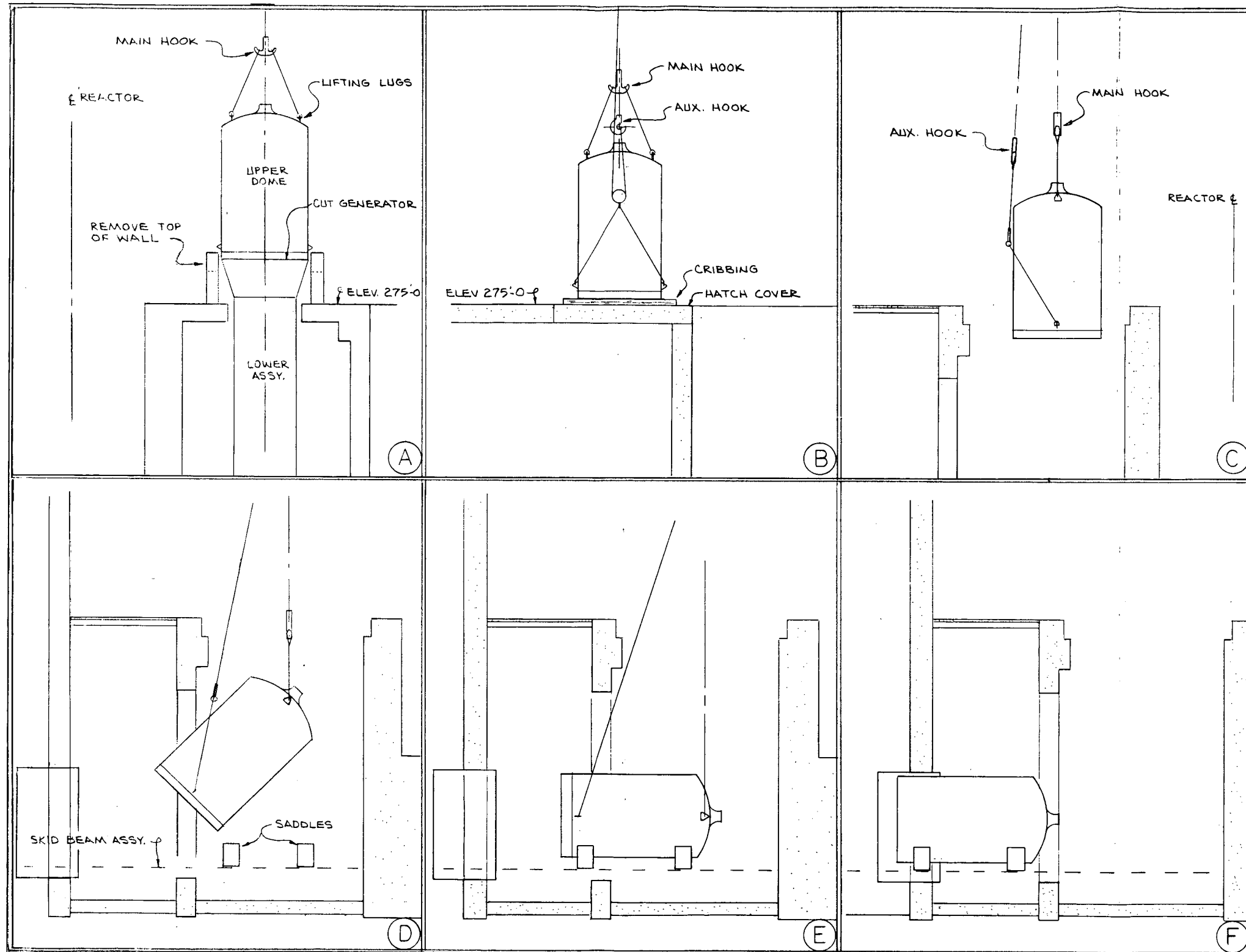

NOTES:

FRAME "A"
ATTACH NECESSARY RIGGING TO UPPER DOME. CUT UPPER DOME FROM LOWER ASSY.

FRAME "B"
ATTACH ADDITIONAL RIGGING (AUX. HOIST) TO LOWER LUGS OF UPPER DOME.

FRAME "C"
LOWER THE UPPER DOME THROUGH THE FLOOR OPENING.

FRAME "D"
AS THE UPPER DOME IS LOWERED TO THE SKID BEAM ASSEMBLY WITH THE MAIN HOIST THE AUX. HOIST WILL BE RAISED TO INVERT THE UPPER DOME TO A HORIZONTAL POSITION.

FRAME "E"
WITH UPPER DOME IN A HORIZONTAL POSITION RESTING ON LOW PROFILE SADDLES WITH MULTI-TON ROLLERS, RIGGING WILL BE REMOVED.

FRAME "F"
WITH RIGGING REMOVED, THE UPPER DOME WILL BE ROLLED OUTSIDE.

REVISION NO. 1
STEAM GENERATOR REPAIR REPORT

CAROLINA POWER AND LIGHT COMPANY
H. B. ROBINSON PLANT - NPCD

REMOVAL SEQUENCE OF UPPER DOME

FIGURE 3.0-6

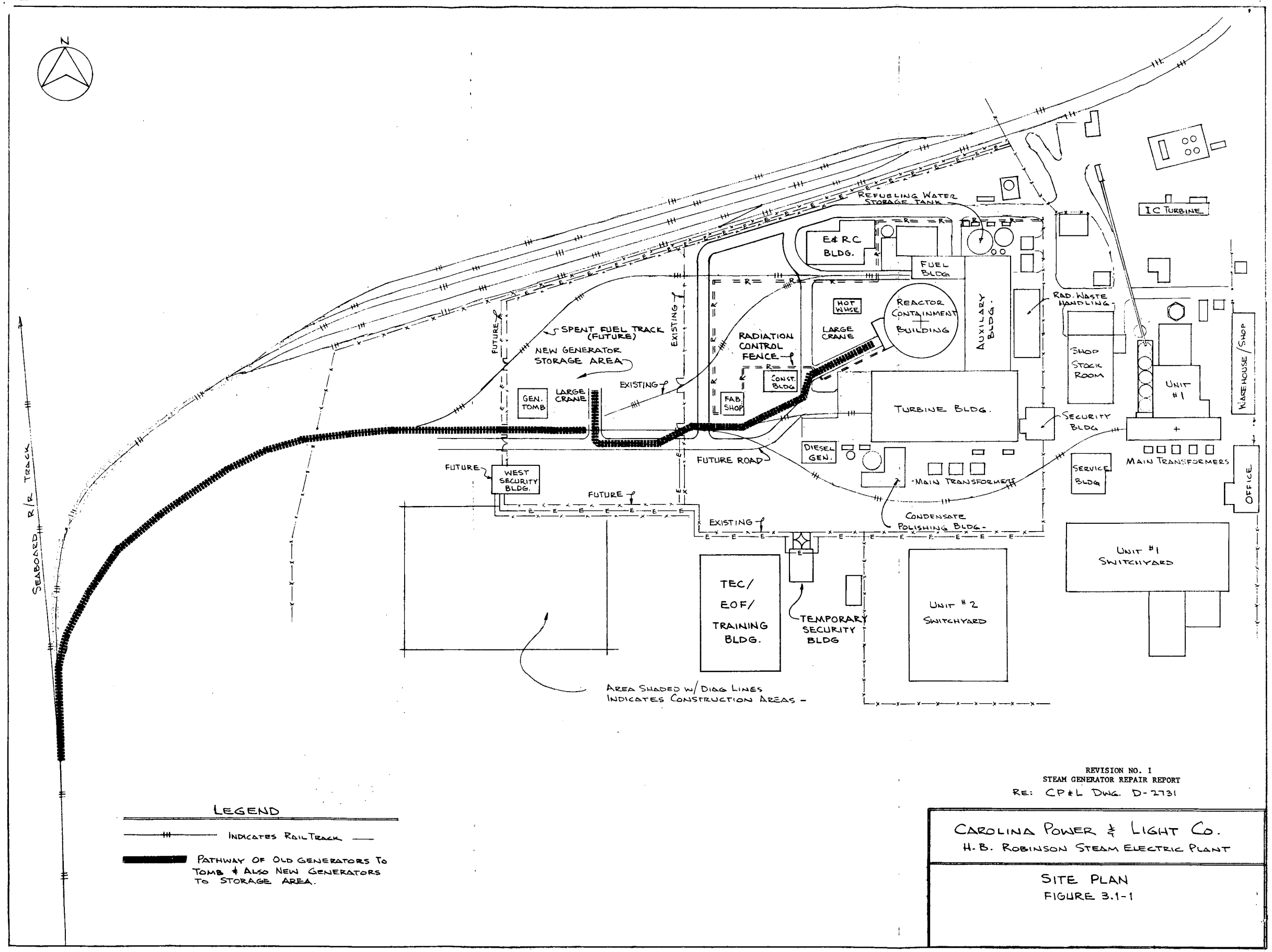

REVISION NO. 1
STEAM GENERATOR REPAIR REPORT
RE: CP&L DWG. D-2731

CAROLINA POWER & LIGHT CO.
H.B. ROBINSON STEAM ELECTRIC PLANT

SITE PLAN
FIGURE 3.1-1

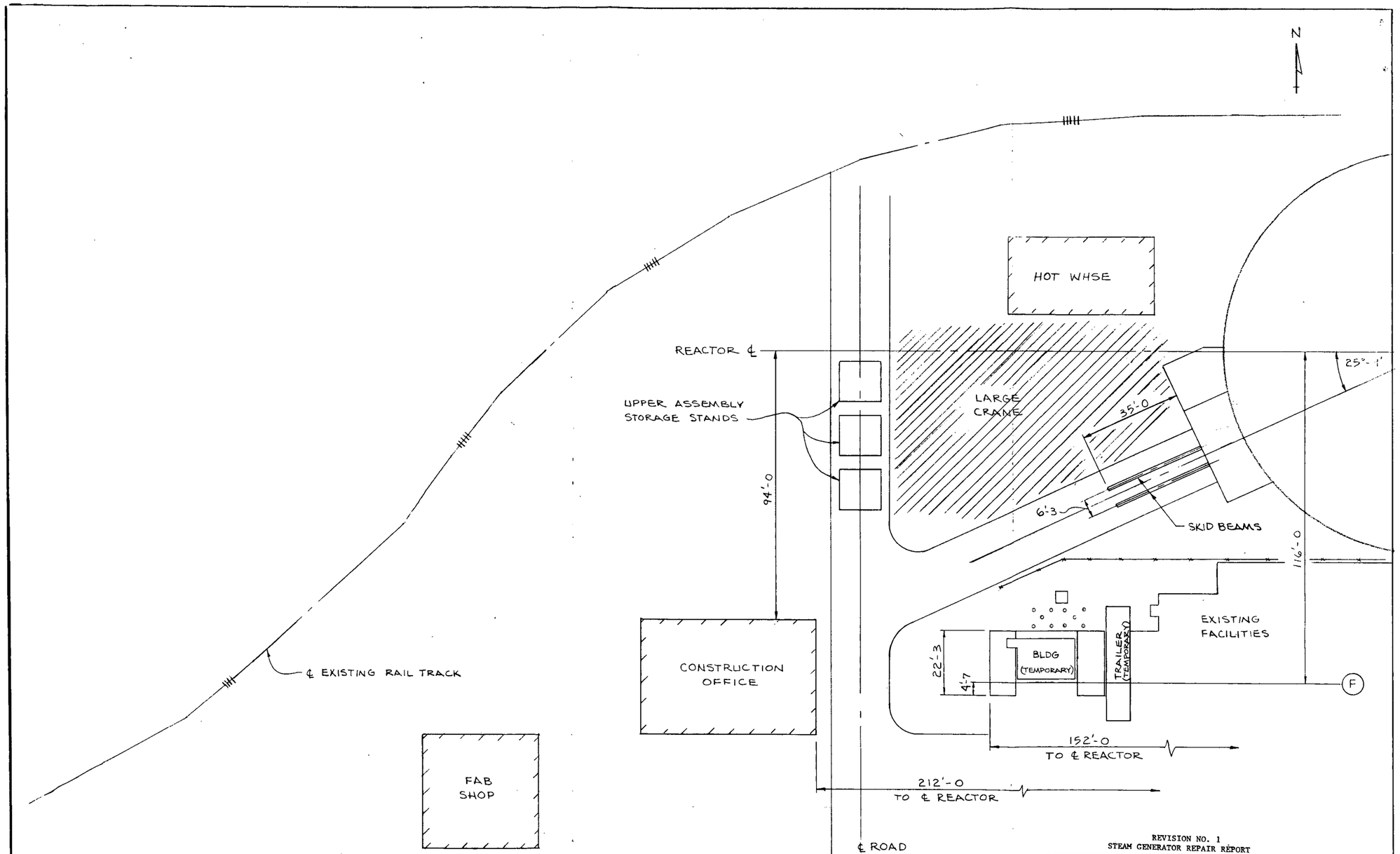

REVISION NO. 1
STEAM GENERATOR REPAIR REPORT

CAROLINA POWER AND LIGHT COMPANY
H. B. ROBINSON PLANT - CONSTRUCTION

PLAN VIEW ENTRY / EXIT FACILITY
AT CV EQUIPMENT HATCH
FIGURE 3.1-2

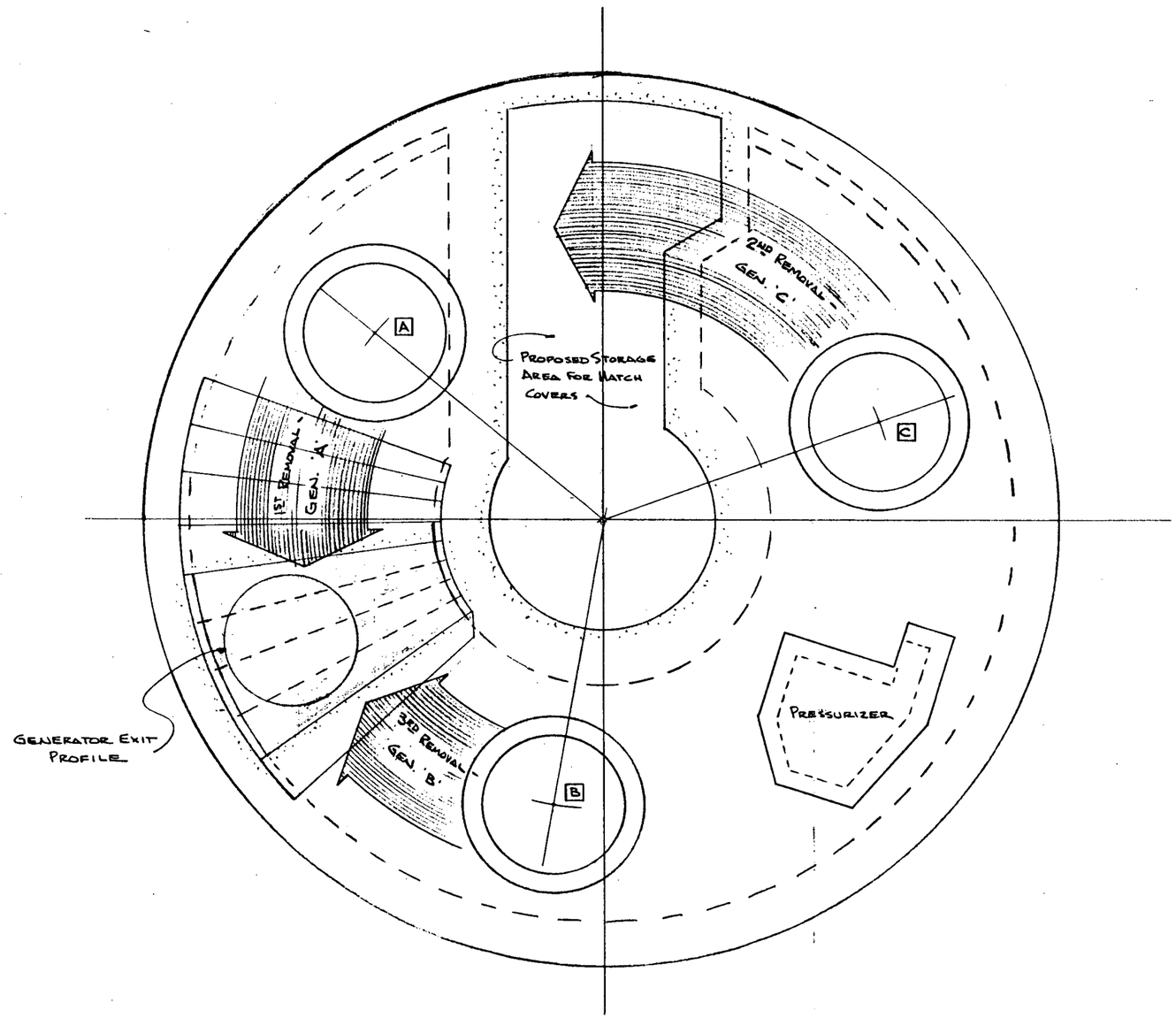

PLAN AT ELEVATION 275.00'

H. B. ROBINSON UNIT NO. 2
STEAM GENERATOR REPAIR REPORT

MOVEMENT PATHWAYS

FIGURE 3.1-3

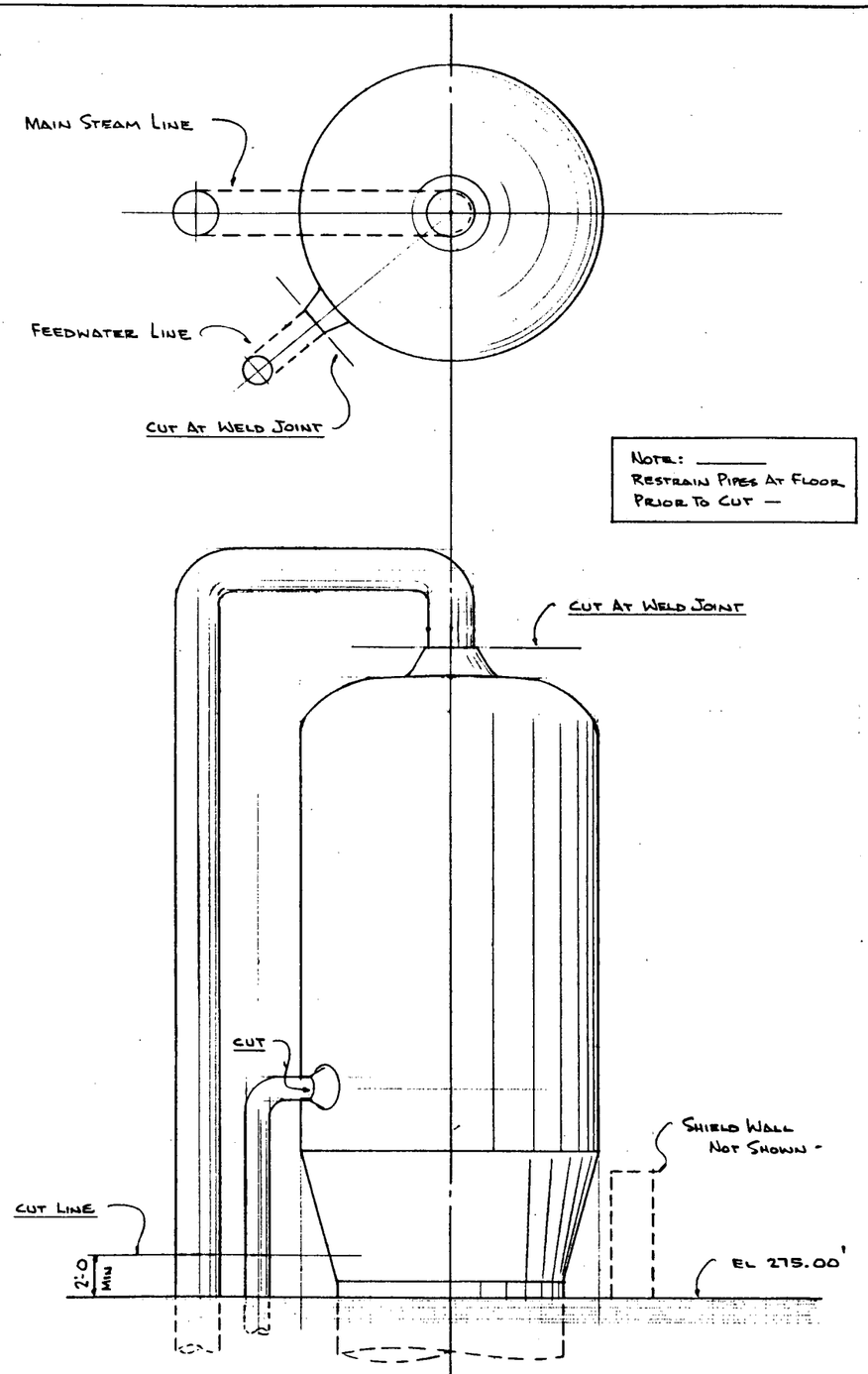

DETAIL OF GENERATOR UPPER ASSEMBLY

TYPICAL FOR ALL THREE

H. B. ROBINSON UNIT NO. 2
STEAM GENERATOR REPAIR REPORT

PIPING CUTS - MAIN STEAM
AND FEEDWATER LINES

FIGURE 3.2-0

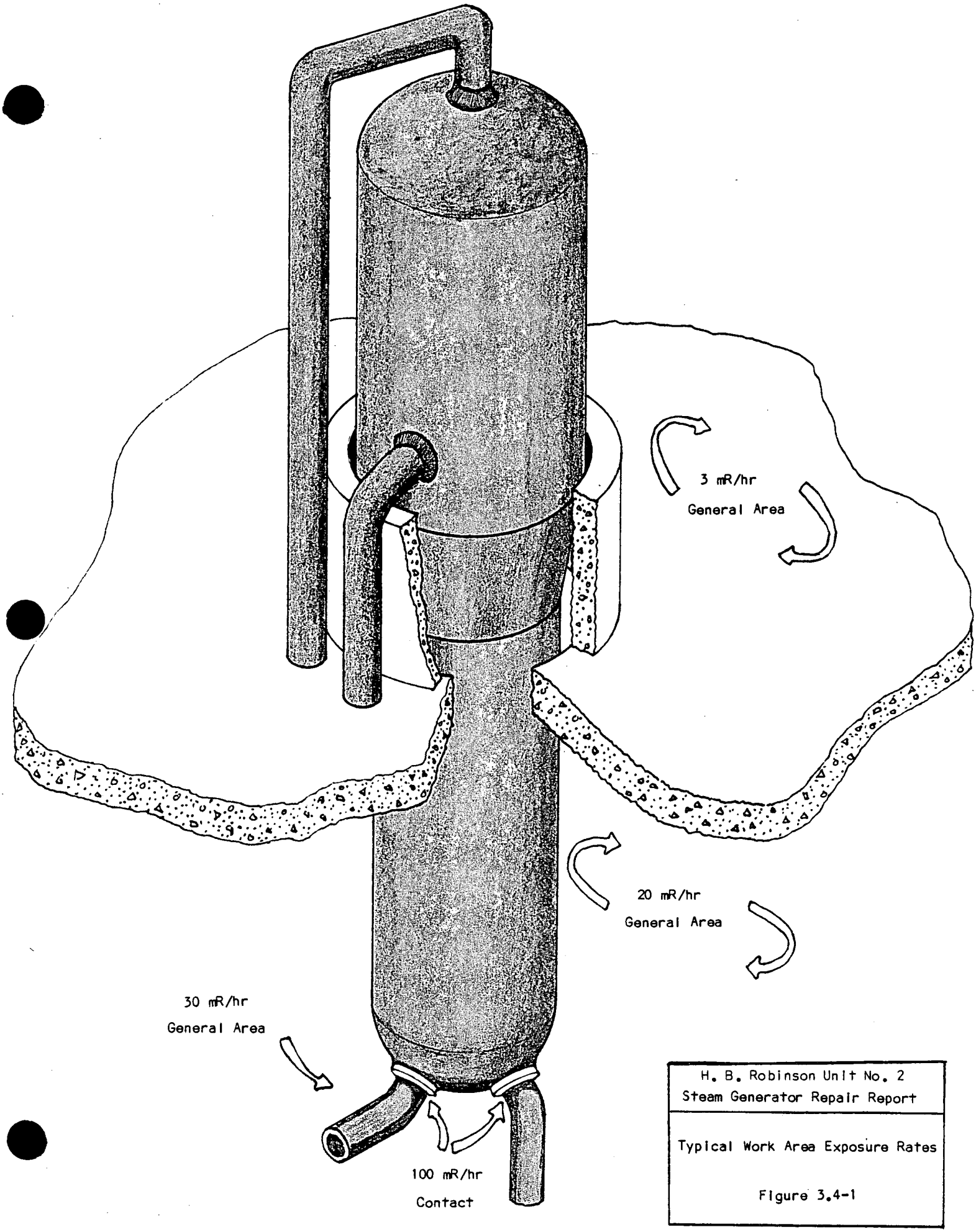

H. B. Robinson Unit No. 2
Steam Generator Repair Report

Typical Work Area Exposure Rates

Figure 3.4-1

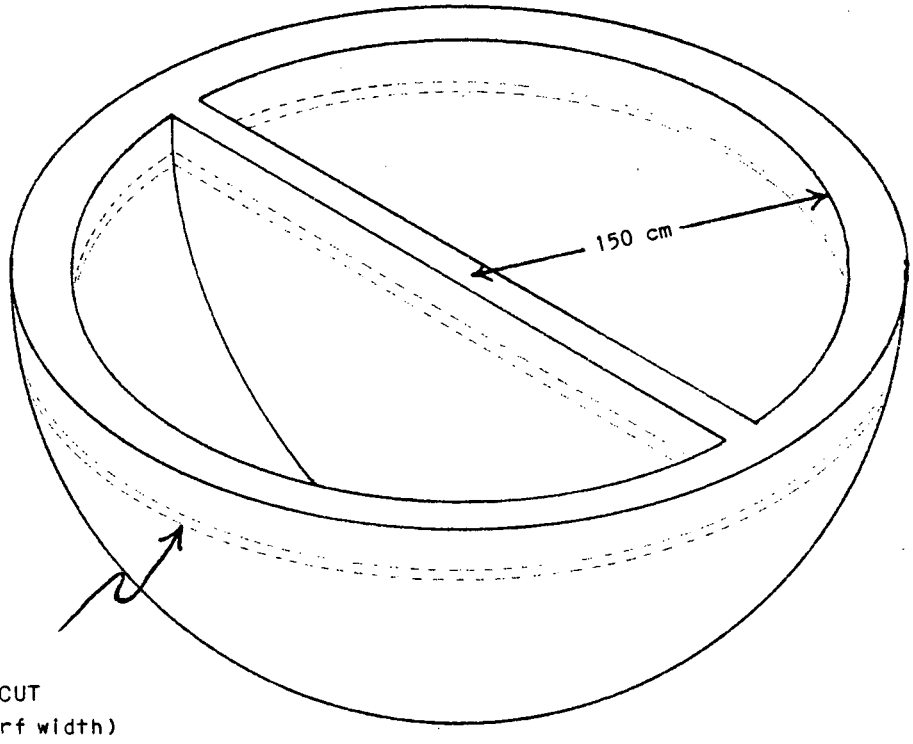

TOTAL AREA OF CUT . . .

$A = \pi dh + 2dh = (\pi + 2)(300\ cm)(1\ cm) = 1542\ cm^2$

ACTIVITY = 75.3 $\mu Ci/cm^2$

= 7.53 $\mu Ci/cm^2$ AFTER DECON (DECON FACTOR = 10)

AIRBORNE ACTIVITY = $(7.53\ \mu Ci/cm^2)(1542\ cm^2) = 1.16 \times 10^4\ \mu Ci$

ASSUME 10^4 EFFICIENCY HEPA FILTER SYSTEM . . .

1.16 μCi TO PUBLIC PER GENERATOR

3.48 μCi TO PUBLIC TOTAL

H. B. Robinson Unit No. 2 Steam Generator Repair Report
Airborne Release Calculation for Channel Head Cut Figure 3.4-2

4.0 RETURN TO SERVICE TESTING

Following steam generator repair, a preoperational testing program will be conducted to demonstrate that the facility can be operated in accordance with design requirements and in a manner that will not endanger the health and safety of the public.

Table 4.0-1 indicates the tests that are planned following installation of the new steam generator assemblies.

Removal of the steam generators will be through the equipment hatch. No modifications impacting the integrity of the equipment hatch or the containment pressure boundary are contemplated at this time. An appropriate leak test will be performed to demonstrate containment integrity following the steam generator replacement.

TABLE 4.0-1

H. B. ROBINSON UNIT 2
STEAM GENERATOR REPLACEMENT
POST INSTALLATION TESTING.

1. The steam generator primary side will be pressure tested.
2. The steam generator secondary side will be pressure tested.
3. The reinstallation of instrumentation will be verified.
4. Baseline inservice inspection records will be developed.
5. The reassembly of the fuel transfer manipulator crane will be verified.
6. The restoration of electrical wires/cables will be verified.
7. During heatup of the system, thermal expansion acceptability will be verified and data collected.
8. At RCS operating temperatures, the gap between the steam generator OD and support ring shims will be verified.
9. A steam generator thermal output and RCS flow measurement test will be performed.
10. A steam generator water level stability and control test will be performed.
11. A steam generator moisture carryover test will be performed.

5.0 SAFETY EVALUATION

5.1 FSAR EVALUATIONS

5.1.1 INTRODUCTION

The purpose of this section is to evaluate the impact, if any, of the repaired steam generators on the accident analysis transients for HBR2. Under the guidelines specified in 10 CFR 50.59 such an evaluation is required to verify that no unreviewed safety concerns or changes to the Technical Specifications occur. This section provides a qualitative discussion of the effect on the accident analysis of steam generator parameter changes resulting from steam generator repair.

The relevant plant operating parameters and steam generator design parameters have been compared in Table 2.3-1 and in Section 5.1.2 for the original and repaired steam generators. While incorporating design modifications that will improve the flow distribution, the tube bundle accessibility and reduce secondary side corrosion, the repaired steam generators continue to match the design performance of the original steam generators. It may be noted from Table 2.3-1 and Section 5.1.2 that there is very little change in plant operating parameters in repairing the steam generators. It is, therefore, to be anticipated that the impact on the accident analyses will be insignificant. The results of the accident evaluation show that the repair of the steam generators resulting in physically and functionally similar units will not result in any adverse changes in the plant operating conditions used in the FSAR and later reanalyses, and, therefore, the analyses presented in the FSAR and later reanalyses are still valid. This section establishes that no unreviewed safety concerns exist due to operation with the repaired HBR2 steam generators.

5.1.2 NON - LOCA ACCIDENTS

The purpose of this section is to identify how the changes in design between the original and replacement steam generators could potentially affect the transients and accidents analyzed in Chapter 15 of the H. B. Robinson Updated FSAR. The replacement steam generators (SG) differ from the original SG in the following parameters that are of signifigance in the safety analyses.

a) There are 46 fewer tubes or 1.4% (3,214 vs 3,260).

b) Heat transfer area is 963 ft^2/SG less or 2.2% (43,467 vs 44,430). 1

c) Primary volume is reduced by 9 ft^3.

d) Secondary no load mass is 3,000 lbm/SG more or 2.2% (137,000 vs 134,000).

e) Secondary 100 percent load mass is 1,000 lbm/SG less or 1.1% (91,000 vs 92,000).

f) The combined SG heat transfer coefficient (U) remains unchanged.

g) At full power the ΔP across the SG primary has been reduced 1.37 psi or 4.2% (30.93 vs 32.3).

Items a, b, and f above demonstrate a very small change in the heat transfer between the original and replacement SG. Items c, d, and e demonstrate very small changes in fluid heat capacities thus resulting in very small changes in the timing of events. Item g is an indication of a smaller loss coefficient thus a better natural circulation flow. With these differences in mind the transients are discussed individually.

Uncontrolled RCCA Withdrawal From a Sub-critical Condition

This transient was analyzed in the FSAR and is terminated by a 25 percent power reactor trip in 12 seconds. The reactor coolant loop fluid transport time is ~14.5 seconds. Changing the steam generators would have no effect on this transient. This transient is well clear of DNB conditions.

Uncontrolled RCCA Withdrawal at Power

This transient was analyzed in XN-75-14 at 2,300 Mwt and 62 percent power for different reactivity insertion rates. The transient was analyzed at 2,346 Mwt in XN-NF-80-43 for 15 percent tube plugging for fast and slow rod withdrawal at beginning-of-cycle conditions. In all cases, the MDNBR was well above 1.3. The thermalhydraulic properties of the replacement SG are bounded by these analyses.

Malpositioning of a Part-Length Rod

The part-length rods have been removed. This transient need not be considered.

RCCA Drop

This transient was analyzed in XN-75-14 at 2,300 Mwt with automatic turbine runback and blockage of automatic rod withdrawal. Exxon Nuclear Company (ENC) provided CP&L with a new analysis under a letter dated July 15, 1982, that demonstrated that even without automatic turbine runback and automatic rod withdrawal, block protection for 0 percent and 20 percent plugging, and no allowed steam dump, an acceptable MDNBR of 1.5 (W-3 correlation) was calculated. The replacement SG thermalhydraulic properties are bounded by these analyses.

Rupture of a Control Rod Mechanism Housing - RCCA Ejection

This transient was analyzed in the FSAR at 2,346 Mwt and it is clear that the peak fuel and clad temperatures are reached within 5 seconds for all cases, and the fuel damage is bounded by the LOCA analyses. The repaired SG will have no bearing on this transient since the values of concern are turned around in less than the primary fluid loop transport time.

Loss of Reactor Coolant Flow

There are three cases to be considered in this discussion:

a) Total loss of reactor coolant flow.

b) Partial loss of reactor coolant flow.

c) Locked rotor.

Transient "a", total loss of reactor coolant flow (three pump coastdown), was analyzed in XN-75-14 at 2,300 Mwt; and the reactor tripped in 1.6 seconds, and a MDNBR of 1.68 is reached in 1.8 seconds. This is considerably less than the primary fluid loop transport time. Therefore, the replacement SG has no effect on this transient. This transient was reanalyzed in XN-NF-80-43 for 15 percent tube plugging with no appreciable change in any of the parameters of interest.

Transient "b", partial loss of reactor coolant flow (two pumps tripped), was analyzed in the FSAR at 2,200 Mwt; and reactor trip is assumed to be on low loop flow, and MDNBR was reached in 2.95 seconds. This transient has not been reanalyzed at 2,300 Mwt. This transient is bounded by "a" and "c".

Transient "c", locked rotor, was analyzed in XN-75-14 at 2,300 Mwt. Reactor trip occurred in 1.2 seconds based on low flow, and a MDNBR of 1.40 was reached in 1.8 seconds. The primary loop transport time is much greater than the time to MDNBR. Therefore, the replacement SG will not affect this transient. This transient was reanalyzed for 15 percent tube plugging in XN-NF-80-43 with no significant change in parameters of concern.

Excessive Load Transient

This transient was analyzed in XN-75-14 at 2,300 Mwt. The core reached 106 percent of rated power after 100 seconds as power level rises to meet the increased demand. Since the decrease in average coolant temperature compensates for the increased core power during the transient, MDNBR is not significantly reduced (1.85). The original and replacement SGs are so similar in heat transfer capability that there is no need to reanalyze this transient.

CVCS Malfunction

This transient is bounded by the uncontrolled rod withdrawal transient. The maximum rate of reactivity insertion by boron dilution (1.1×10^{-5} Δk/sec.) at full power is much less than the reactivity insertion (5.625×10^{-4} Δk/sec.) in the uncontrolled rod withdrawal transient (XN-75-14).

Startup of an Inactive Reactor Coolant Loop

This transient will not be reanalyzed since H. B. Robinson technical specifications allow only three-loop operation.

This transient was analyzed in XN-75-14 at 2,300 Mwt, and a MDNBR of 2.30 was reached. The results of this transient would remain virtually unchanged since the inactive loop temperature is independent of the SG heat transfer, and the primary fluid transport times are virtually identical.

Reduction in Feedwater Enthalpy Transient

This transient was analyzed in XN-75-14 at 2,300 Mwt for the accidental opening of the feedwater bypass valve. The sudden reduction in feedwater inlet enthalpy to the steam generators increases sub-cooling and causes a greater demand on the reactor coolant system. Plant operation is at 2,300 Mwt. As secondary heat demand exceeds core power generation, pressurizer pressure decreases considerably. The DNB margin increases as core average temperature decreases.

The original and replacement SGs are so similar that there would be little effect on this transient.

Loss of External Electrical Load

This transient was analyzed in XN-75-14 at 2,300 Mwt for a turbine generator trip without direct reactor trip. A high-pressure trip occurs at 6.5 seconds with a peak pressure of 2,530 psia at 8.0 seconds. MDNBR does not decrease below its initial value.

The parameters of interest reach their maximum value within the primary loop transport time. Therefore, the replacement SGs do not affect the results during the period of interest.

Loss of Normal Feedwater

This transient was analyzed in the FSAR at 2,346 Mwt. The reactor is tripped at the start of the transient. This transient does not result in adverse conditions in the core because there is no water relief from the pressurizer, nor is there an uncovering of the tube sheets of the SG being supplied with water.

The replacement SGs are of almost identical physical dimensions with the average U-tube height remaining the same. The replacement SGs have a slightly reduced pressure drop across the primary side thus enhancing natural circulation. These replacement SGs will not significantly degrade the results of this transient.

Loss of all AC Power

The consequences of this transient are controlled by steam relief capacity and the ability of the auxiliary feedwater systems in supplying water to the SGs to remove core heat. These controlling capacities have not changed from the original FSAR analysis. The average U-tube height remains unchanged and the ΔP is lower so there will be no degradation of natural circulation flow.

This transient caused no release of water from the primary, and the tube sheets of the SG being supplied with water do not become uncovered.

Turbine Generator Design Analysis

The turbine generator design analysis describes the turbine generator and its speed control and provides a discussion concerning the velocity and energy of

postulated ejected parts from the turbine. This analysis is completely independent of the nuclear steam supply system and thus is not affected by the replacement SG.

Rupture of a Steam Pipe

This transient was analyzed at hot zero power (HZP) for a break inside* containment, with the most reactive rod stuck out, with one of the SI pumps inoperable, with bounding negative moderator coefficient, and with off-site power available in XN-75-14. The core returns to power in 14 seconds. Boron reaches the core in 38.0 seconds, terminating the power increase. MDNBR is 1.33. This transient will not significantly change since the replacement SGs are virtually identical to the originals.

5.1.3 LOCA

This transient was analyzed in XN-NF-80-43 at 2,346 Mwt for a spectrum of break configurations to identify the limiting break. Then an analysis was run for 6 percent, 10 percent, and 15 percent tube plugging. The analyses were performed in accordance with Appendix K of 10CFR50. It was determined that even with plugging levels of 15 percent for a 0.8 DECLG and an F_Q^T of 2.37 that the peak clad temperature only reached 2,163 °F. This report showed that changes in heat transfer areas (tube plugging) had little effect on LOCA analyses in the range of interest. The replacement generators are covered by these analyses.

Steam Generator Tube Rupture

There is no significant change in SG tube physical dimensions. Thus, the tube rupture analysis presented in the FSAR would be essentially unchanged with the repaired SG and remain valid.

5.2 CONSTRUCTION RELATED EVALUATIONS

Heavy load handling and transportation requirements have been evaluated. As previously stated, administrative procedures and precautions will be established to minimize the likelihood of rigging and equipment handling accidents. Precautions include training of equipment operating personnel, appropriate protection of underground facilities along haul routes, control of haul routes and equipment speed, control of lift heights and travel paths, location of crane and swing arcs for loaded and unloaded cranes and equipment inspections prior to use. However, to properly assess the potential affects on plant safety, rigging and equipment handling incidents have been postulated to occur. The following evaluation demonstrates that the existing

* Exxon Nuclear Company Report XN-75-14 stated that the break occurred outside containment. That was a typographical error since all analyses were calculated assuming the break was inside the containment.

configuration, augmented where appropriate with temporary physical protection, can accommodate all events analyzed with no adverse affect on the ability to maintain a safe shutdown condition or to provide adequate cooling for stored spent fuel.

Therefore, the conclusions reached by the analysis of construction related incidents are that any loss of safety related functions has been precluded and there are no unreviewed safety questions associated with this construction activity.

5.2.1 HANDLING OF HEAVY EQUIPMENT AND MATERIAL

The following analyses demonstrate that the postulated events will not preclude the ability to maintain a safe shutdown condition or to cool the spent fuel pool. These postulated events are unlikely to occur since the potential for these events has been precluded by existing plant layout/design and/or temporary augmented protective measures and administrative controls.

5.2.1.1 Containment - Postulated Failure of Polar Crane and Subsequent Drop of Steam Generator Lower Assembly

Prior to commencement of heavy load handling activities for steam generator replacement, all fuel will have been removed from the containment and stored in the spent fuel storage pool. Since no fuel will remain in the containment, no postulated rigging incident inside the containment could result in an object impacting the fuel or the spent fuel storage pool. Should the fuel transfer tube on the containment side be adversely affected, two barriers outside the containment would prevent draining of the spent fuel pool.

a) The fuel transfer tube isolation valve, located at the termination of the fuel transfer tube in the spent fuel building, will be closed.

b) The spent fuel pool seal gate between the storage pool and transfer canal will be in place.

Therefore, leak tight integrity of the spent fuel storage pool would not be affected.

5.2.1.2 Postulated Failure of Unloaded Crane Boom

Analyses were performed to determine the ability of the following safety related structures to withstand the impact of a free falling unloaded crane boom.

Containment Building and Associated Equipment Hatch Area
Spent Fuel Storage Building

The following assumptions were made for the purposes of this analysis:

a) Crane boom falls at 90° to either the containment or spent fuel storage bulding.

b) The crane boom is in an initial vertical position.

c) The crane boom is 100' long, weighing approximately 25,000 pounds and falls through a vertical plane prior to impact.

d) No additional protection, such as crane mats, structural bridging or added fill is considered in the analysis.

Results: Spent Fuel Building - The existing plant configuration precludes the possibility of a crane boom striking the spent fuel building since the distance from the crane to the building is over 125 feet. Therefore, since a falling boom could not possibly strike the spent fuel storage building, potential hazards to the spent fuel and spent fuel building are eliminated.

1

Results: Containment and Equipment Hatch - Analysis was conducted for a freefalling crane boom on the containment shell to determine if it could sustain the boom impact of paragraph "c" above, and the probable extent of damage to the concrete. The evaluation has indicated that potential damage to containment shell might be significant. Thus administrative controls will be invoked to prevent these accidents.

5.2.1.3 Transportation of Steam Generator Lower Assemblies

Precautions to be taken during transportation will include training of equipment operating personnel, additional protection of buried piping and duct banks where necessary, control of haul routes and equipment speeds, and control on lift heights, travel directions, location, and turning radius for both loaded and unloaded vehicles. Soil tests have been conducted and design work is in progress for a heavy haul road from the equipment hatch to the storage compound. The transport trailer complete with test weights will traverse the entire length of this road to insure the adequacy of its design and the completeness of the administrative controls. Analyses have been made of the possible impact areas, none of which are nuclear safety related, imposed by an overturned trailer loaded with a lower assembly. Administrative controls will be in effect to prevent necessary conditions from existing for overturning a trailer loaded with a steam generator. Though these events are not likely to occur, they will be analyzed and temporary protective measures will be taken to prevent any personnel or equipment damage in the event that the trailer is overturned. 1

THIS PAGE INTENTIONALLY LEFT BLANK

1

5.2.1.4 Potential for Damage to Refueling and Primary Water Storage Tank Due to Load Drop or Rigging Incident

All rigging and load handling operations associated with the steam generator replacement including handling the steam generator lower assemblies will be conducted in areas sufficiently removed from the Refueling and Primary Water Storage Tanks. The tank locations are separated from the rigging areas by the auxiliary building, spent fuel building, containment building and open space. See Figure 3.1-1 for the arrangement. Therefore, there is no potential for damage to this safety related equipment or possibility of interrupting make-up water to the spent fuel storage pool due to a load drop or rigging incident during the replacement program. As previously discussed, no underground safety related facilities are near the loading/unloading area, or transport route.

6.0 ENVIRONMENTAL ASPECTS OF THE REPAIR EFFORT

6.1 GENERAL

The intent of this section is to evaluate any environmental effects which the steam generator repair effort may have which exceed those resulting from normal operation. Construction activities will be carried out in conformance with local, state, and federal regulations. Following the repair effort, any environmental impacts resulting from the repair effort are expected to return to those existing before the repair effort or to be less than those previously existing.

6.2 RESOURCES COMMITTED

6.2.1 NON-RECYCLABLE BUILDING MATERIALS

The steam generator repair program for Unit No. 2 at the H. B. Robinson Plant requires the commitment of various irretrievable building materials. Preliminary estimates of these materials are as follows:

Material	Tons
Ferrous Metallic	491
Non-Ferrous Metallic	281
Concrete	22
Wood	Negligible
Asbestos	Negligible

The building materials to be used for this repair program are small compared to the material resource commitments for a typical new 700 MWe PWR Nuclear Power Plant.

6.2.2 LAND RESOURCES

The repair program will have minimal impact on the existing site plan layout in terms of required new foundations. This minimal impact consists of foundations for the transfer platform unloading facility, shown in Figures 3.0-4 and 3.0-5, and foundations and footings for the Entry/Exit facility to be constructed at the Containment Building hatch which is depicted in Figure 3.1.2. No new land resources will be required for this project as all activities occur on CP&L owned property.

6.2.3 WATER RESOURCES

During the repair program, construction water will be supplied from existing plant sources. No requirements for commitments of new water sources have been identified for the repair program. Water consumption during the extended shutdown period planned for the SG repairs is expected to be less than that consumed in normal plant operations over a similar period of time.

6.3 WASTE WATER

Sanitary and laundering operation discharges during the repair effort are the only potential waste water sources of significance. This additional impact is

considered negligible because the number of additional people required for the repair program is estimated at peak to be approximately 500 which is typical of the number of additional people required for refueling and major maintenance activities associated with other scheduled plant outages. Waste water generated by repair program personnel will be handled as discussed in 6.3.1 below.

6.3.1 SANITARY FACILITIES

Repair activities will take place in the containment and outside laydown areas which are not readily accessible to permanent plant sanitary facilities. Therefore, portable units will be used and there will be no modifications or impact to the permanent plant sanitary facilities.

6.3.2 LAUNDERING OPERATIONS

Laundry waste water generated from the repair activities will be processed as noted in Section 3.4.1.1 - Decontamination, Section 3.4.1.4 - Removal of Valves and Piping and in accordance with CP&L's Health Physics Manual and its implementing procedures.

Normal laundry processing will be supplemented by four (4) portable dry cleaning units as noted in Section 3.4.7 Laundry Facilities.

6.4 CONSTRUCTION

Construction activities at the time of the repair effort will satisfy applicable laws that are in force at that time. These activities will have a negligible effect on noise levels, dust, or smoke.

6.4.1 NOISE

Actual construction noise sources of the recent outage (spring, 1982) are used as reference levels for H. B. Robinson site and site boundary, since they caused no objectionable situations to local residents. Noise from the planned steam generator replacement construction at site boundary will not exceed that experienced during our most recent outage. Based on the location of the site in a low population area and the limited amount of construction equipment required, noise resulting from the repair program for the steam generators is expected to have negligible, additional impact on the local area.

To protect personnel located on the site, Occupational Safety and Health Administration Standards (OSHA) will be followed.

6.4.2 DUST

Dust created by movement of vehicular traffic in an unpaved area, if any, will be abated by periodically spraying with water. The frequency of spraying and the quantity of water sprayed will be determined by visual inspection of the areas and will vary with the weather conditions. Dust from the arrival and departure of construction workers will be reduced by planned improvement and paving of the entrance road to the construction parking lot.

6.4.3 OPEN BURNING

Open burning is not anticipated during the steam generator repair effort. However, should the necessity arise, applicable county and state regulations for open burning will be followed.

6.5 RADIOLOGICAL MONITORING

All releases from the plant will be through the same release points as during normal operations. Consequently, current monitoring facilities will be adequate.

6.6 RETURN TO OPERATION

6.6.1 WATER USE

Water consumption during post repair plant operation is expected to be considerably less than water consumption during current plant operation. Currently, frequent shutdowns of the unit to perform steam generator tube plugging and/or eddy current inspection result in a significant water consumption. Steam generator filling and draining operations are required to locate the leaky tubes prior to plugging, for hydrostatic testing of the steam generators after plugging, and to maintain the other generators in wet lay-up. These operations require significant quantities of water. For example, filling and draining to locate leaks and to perform hydrostatic testing require approximately 60,000 gallons of water per generator requiring tube plugging, plus approximately 15,000 gallons for wet lay-up of the other two steam generators, for a total of approximately 75,000 gallons of water. An outage to perform the currently required periodic steam generator inspections consumes approximately 167,000 gallons of water. If tube plugging is required at the time of the inspection, an additional 40,000 gallons of water will be expended.

Following repair of the steam generators, it is expected that the steam generator tubes will remain intact; therefore, no unit shutdowns are anticipated for steam generator tube plugging and requirements for periodic inspection should be reduced significantly.

6.6.2 OPERATIONAL EXPOSURES

Section 3.4.8 discusses the reduction in man-rem exposure associated with repair. Due to the expected elimination of the necessity to plug steam generator tubes in the repaired steam generators, approximately 250 man-rem will be saved per year after implementing the repair. Thus, after 9 years of operation post-repair, the savings in man-rem will exceed the man-rem expended during the repair.

6.6.3 RADIOLOGICAL RELEASES

Secondary plant activity results from primary to secondary leakage. The repaired steam generators will result in enhanced tube integrity thus reducing secondary plant releases.

7.0 EVALUATION OF ALTERNATIVES

7.1 INTRODUCTION

The discussion that follows demonstrates that the optimum solution available to alleviate the steam generator tube degradation problem is to repair the steam generators. As indicated previously, this repair involves the replacement of the steam generator lower assemblies with new shop-fabricated lower assemblies. This discussion also vividly indicates that the cost associated with the outage is the overriding consideration that governs any cost benefit evaluation.

The discussion that follows is based on the current state-of-the-art. It assumes that the plant must be shut down or that corrective action is required to ensure an acceptable level of system reliability. It must be noted that the technology as it relates to steam generator corrosion, electrical system requirements and economics, are dynamic factors that directly impact the analyses provided below. At the shutdown of the unit, evaluations will be updated as required to ensure that CP&L embarks on the optimum approach to accommodate the outage of the unit.

Loss of capacity from this unit would require the addition of replacement capacity from new generating facilities and/or the purchase of firm power. The cost of new facilities can be compared with the cost of repair; however, the availability of firm power for purchase must be periodically reevaluated to reflect current conditions.

Derating of the unit is an alternative to the repair that cannot be addressed quantitatively at this time. Parametric studies can be performed assuming various derating conditions to determine the economics of repair versus derating. However, at this time corrosion rates and the likelihood of achieving a corrosion plateau cannot be quantified with precision. Accordingly, economic evaluations of derating do not presently provide a sufficiently reliable prediction of real world events. Should the evolving technology yield suitable corrosion models, further evaluation of derating would be warranted.

Potentially, there are several alternatives to the repair that could accommodate tube degradation: (1) arresting the corrosion phenomenon, (2) in-place restoration of tube areas (sleeving), and (3) in-place steam generator refurbishment (retubing). As discussed infra, the ability to sleeve is moot unless corrosion can be arrested. The ability to arrest corrosion to ensure long term (30 to 40 year) operation without repair is not at hand.

The viability of each alternative to repair must be determined primarily by its present state of development. Alternatives that require research and development (R&D) to demonstrate feasibility are incompatible with the earliest potential shutdown date for initiation of repair activities.

7.2 ARRESTING CORROSION

The various tube wall degradation mechanisms which are currently ongoing and/or have occurred in recent years in the H. B. Robinson Steam Generators (SGs) are discussed below.

Thinning in the Top of the Tubesheet/Above the Tubesheet Region

The central area of the tube bundle on the hot leg and cold leg sides of the SGs exhibit wall thinning in the region of phosphate sludge deposits on the tubesheet. The corrosion mechanism is referred to as phosphate thinning. Thinning has been occurring for many years with fluctuating wall loss rates and is still ongoing. This phenomenon has occurred at relatively slow rates and has resulted in a large population of degraded (but not yet pluggable) tubes in each SG.

Crevice Region

The unrolled length of tube in the tubesheet forms a crevice which aids the concentration of chemical agents which cause Intergranular Attack (IGA) of the tube material. This has occurred primarily in the region below the tubesheet sludge pile on the hot leg side of the SGs. This corrosion mechanism was first observed in September 1978 and the rate of tube plugging due to this mechanism has increased signficantly. Operation of the plant with a reduced T_{Hot} is expected to reduce this type of corrosion.

Intergranular Attack (IGA) and Stress Corrosion Cracking (SCC) Above the Tubesheet

Rapid tube wall degradation due to IGA and SCC in the region just above the tubesheet on the hot leg side of the SGs was observed in July 1981. This corrosion mechanism was attributed to the formation of concentrated sodium hydroxide in this region. As the formation of sodium hydroxide is believed to be temperature dependent, the plant has been operated with a reduced T_{Hot} since this occurrence. This has apparently arrested this corrosion mechanism. 1

Thinning at the Tube to Tube Support Plant Interface

Tube wall thinning has occurred where peripheral tubes pass through the support plates on the hot leg and cold leg sides of the SGs. This has occurred primarily in the regions where there are no support plate flow holes. The corrosion mechanism appears to be phosphate thinning and is attributed to the accumulation of sludge in these regions. This mechanism was first observed in March 1980 and is continuing, but the number of affected tubes has remained very small.

U-bend Region Tube Thinning

Tube wall thinning has occurred in the U-bends of tubes located primarily in the peripheral region of the tube bundles. The corrosion has occurred below the #3 antivibration bar down to the bend transition primarily on the hot leg side. The same general groups of tubes has also exhibited thinning (not fretting) at some antivibration bar contact points. The corrosion mechanism is believed to be phosphate thinning. This phenomenon was first observed in

March 1980 after the initial period of plant operation at 2300 MWt. Inspection results have demonstrated that significant corrosion occurs in this region only during periods of 2300 MWt operation. For this reason, attempts to operate above 2200 MWt with the existing SGs were abandoned pending further study.

Pitting Below the First Support Plate

Some eddy current signals observed during the March and April 1980 inspections appeared to be characteristic of pitting. These were observed in the tubesheet sludge pile region on the hot leg and cold leg sides of the SGs, at locations where signals indicative of copper deposits had been observed in previous inspections. The multi-frequency eddy current techniques used for the first time at HBR during the March and April 1980 inspections allowed detection of these defects. This phenomenon affected only a small number of tubes and has not been observed since. 1

Denting

The corrosion of tube support plate and tubesheet base material adjacent to the tube wall can fill the annulus and ultimately cause the deformation of the tube wall. This phenomenon, called denting, has been observed for many years in the H. B. Robinson SGs. Both the size of the dents and the number of dented tubes has been observed to be slowly increasing. However, the phenomenon appears to be self arresting at a dent size of approximately 10 mils and no tubes have ever required plugging due to denting.

Two pivotal factors necessary to cause tube degradation are the existence of crevices wherein chemicals can hide and corrosion products can be confined and introduction of foreign material (i.e., oxygen ingress, condenser leaks).

These causal factors can be eliminated by current state-of-the-art designs, which is the approach followed in repair by utilizing new steam generator lower assemblies. The new tube support plate material has a corrosion product of a volume essentially equal to that of the parent material, the fully rolled tube eliminates the tube-to-tube sheet crevice, and the quatrefoil tube support plate (TSP) minimizes the extent of areas of close tube to TSP clearance and allows for higher sweeping velocities between the tube and TSP which minimizes steam formation and chemical concentrations in this region.

In summary, for plants experiencing appreciable corrosion, incorporation of state-of-the-art designs and EPRI chemistry guidelines appears to currently offer the only viable long term solution to corrosion.

7.3 IN-PLACE TUBE RESTORATION

The feasibility of locally repairing tubes to restore the tubes structural integrity via sleeving has and continues to be considered. Sleeving is the insertion of a thin-walled tube insert that is positioned in the vertical section of a tube and hydraulically expanded or brazed in place. This method has been utilized in a current test program to restore tube strength for tubes subject to external thinning. The expanded joint may experience minor leakage from 1 to 10 cc/min. The brazed joint is leak tight. 1

If the cause of external tube damage is eliminated, then sleeving may offer a means of restoring damaged tubes provided that there is no tube deformation or tube diameter reduction. A close tolerance between tube ID and sleeve OD is required for sleeving.

In summary, it is concluded that in-place tube restoration via sleeving is currently a viable alternative to the repair but it is not a permanent solution since the cause of the corrosion still exists. 1

7.4 IN-PLACE STEAM GENERATOR REFURBISHMENT

In principle, the methodology exists to refurbish the steam generators in-place. Although much of the technology exists, a comprehensive program of development and testing would be required to provide a basis for cost, time, and personnel exposure comparisons. Based on FP&L evaluations, this repair option was not considered in detail.

7.5 ALTERNATIVE REPAIR METHODS

Two methods of repair of the H. B. Robinson Steam Generator were reviewed. The two options were complete steam generator replacement (i.e., reactor coolant pipe cut as was done at Surry) and lower assembly replacement via the channel head cut as was done at Turkey Point. Carolina Power & Light Company has selected this latter option as being most viable for economic reasons and the substantial savings in man-rem.

7.6 MAN-REM CONSIDERATIONS

The preceding discussion demonstrates that repair appears to be the only long term method currently available to correct appreciable corrosion in steam generators. In-place refurbishment (retubing), although currently not a viable alternative, would likely involve a higher man-rem burden than the repair activity, based on today's state-of-the-art.

Since the need for extensive steam generator inspection and tube plugging operations will be obviated by the repair, yearly exposures associated with these steam generator operations will be significantly reduced. The net result is that there will be a savings in man-rem over the life of the plant.

7.7 REPLACEMENT CAPACITY

If CP&L were required to permanently shut down the H. B. Robinson Nuclear Plant, it would have to replace this capacity to ensure adequate electrical system reliability. The nuclear unit at H. B. Robinson is used for base load operation. Combustion turbines are used to supply peaking power, and thus are not suitable as replacement capacity for this unit due to their high fuel and operating costs. Replacement capacity at approximately $660,000/day is not a viable option.

7.8 DERATION

Section 7.2 discusses corrosion. It indicates that it is not currently possible to predict whether or not a corrosion saturation level or plateau will occur. Should such a plateau become predictable, it would be possible to define a power condition associated with the corrosion plateau. Economic studies could then be conducted to assess the propriety of repair.

7.9 CONCLUSIONS

Repair of the steam generators via the channel head cut is the preferred choice. The dramatic economic advantage due to reduced outage time offsets any potential advantages associated with other viable removal schemes.

The ability to arrest corrosion at H. B. Robinson is not within today's state-of-the-art. Sleeving does not offer any permanent fix without the ability to arrest corrosion. In-place refurbishment (retubing) requires R&D to develop the tooling necessary to make this alternative economically competitive and R&D to develop means to reduce man-rem exposures to acceptable levels. There is currently no suitable alternative to the permanent repair of the H. B. Robinson steam generators.

There are two principal human resource considerations associated with repair: the duration of the unit outage and man-rem exposure.

A 270-day outage at about a $660,000/day replacement power cost has a worth of about $198,000,000. Clearly then, any emphasis for reducing societal costs should be focused on reducing unit unavailability. This is reinforced due to the fact that man-rem associated with repair should be offset by a substantial reduction in operating man-rem subsequent to repair with a net man-rem societal savings over the lifetime of H. B. Robinson Unit No. 2. 1

8.0 COST BENEFIT ANALYSIS FOR THE REMOVAL, STORAGE, AND DISPOSITION OF THE LOWER ASSEMBLIES CONSIDERING ALARA

The various alternatives for lower assembly disposal have been reviewed and are addressed in Section 3.5 of this report. 1