REGULATORY INFORMATION DISTRIBUTION SYSTEM (RIDS)

ACCESSION NBR:8201290435 DOC.DATE: 82/01/25 NOTARIZED: NO DOCKET #
FACIL:50-261 H. B. Robinson Plant, Unit 2, Carolina Power and Ligh 05000261
AUTH.NAME AUTHOR AFFILIATION
UTLEY,E.E. Carolina Power & Light Co.
RECIP.NAME RECIPIENT AFFILIATION
EISENHUT,D.G. Division of Licensing

SUBJECT: Forwards addl info re thermal shock to reactor pressure vessels which suppls WCAP 10019, "Summary Rept on Reactor Vessel Integrity for Westinghouse Operating Plants," submitted 811230. 566 rpt

DISTRIBUTION CODE: A049S COPIES RECEIVED:LTR 1 ENCL 1 SIZE: 43
TITLE: Thermal Shock to Reactor Vessel

NOTES:

	RECIPIENT ID CODE/NAME		COPIES LTTR	COPIES ENCL	RECIPIENT ID CODE/NAME		COPIES LTTR	COPIES ENCL
ACTION:	ORB #1 BC	01	7	7				
INTERNAL:	ACRS ABBOTT,E		1	1	ACRS IGNE,E		1	1
	AEOD		1	1	COM AUSTIN		1	1
	COM LIAW,B		1	1	ELD	12	1	0
	IE	07	2	2	IE WOODS,R		1	1
	MURLEY,T		1	1	NRR CLIFFORD		1	1
	NRR DIR		1	1	NRR GOODWIN,E		1	1
	NRR HAZELTON		1	1	NRR JOHNSON		1	1
	NRR KLECKER		1	1	NRR LOIS,L		1	1
	NRR OREILLY,P		1	1	NRR RANDALL		1	1
	NRR THROM,E		1	1	NRR VISSING,G04		1	1
	NRR/DE DIR		1	1	NRR/DHFS DEPY09		1	1
	NRR/DHFS DIR		1	1	NRR/DHFS/PTRB		1	1
	NRR/DL DIR		1	1	NRR/DL/ADSA		1	1
	NRR/DL/ORAB	11	1	0	NRR/DSI DIR		1	1
	NRR/DSI/RAB		1	1	NRR/DSI/RSB		1	1
	~~NRR/DST DIR~~		1	1	NRR/DST/GIB		1	1
	REG FILE	05	1	1	RES BASDEKAS		1	1
	RES VAGINS,M		1	1	RES/DET		1	1
	RES/DRA		1	1				
EXTERNAL:	ACRS	10	16	16	LPDR	03	1	1
	NRC PDR	02	1	1	NSIC	06	1	1
	NTIS		1	1				

TOTAL NUMBER OF COPIES REQUIRED: LTTR 65 ENCL 63

CP&L

Carolina Power & Light Company

File: NG-3514(R) January 25, 1982

Mr. Darrell G. Eisenhut, Director
Division of Licensing
United States Nuclear Regulatory Commission
Washington, D. C. 20555

H. B. ROBINSON STEAM ELECTRIC PLANT, UNIT NO. 2
DOCKET NO. 50-261
LICENSE NO. DPR-23
THERMAL SHOCK TO REACTOR PRESSURE VESSELS

Dear Mr. Eisenhut:

This letter is in response to your letter of August 21, 1981 and Mr. T. Novak's letter of December 18, 1981 concerning Pressurized Thermal Shock. Carolina Power & Light Company's (CP&L) letter of October 26, 1981 provided preliminary information requested by your August 21 letter. This letter provides in the attached report additional information requested in the August 21 letter and the supplementary information requested by Mr. Novak's letter of December 18.

The attached report supplements WCAP 10019, "Summary Report on Reactor Vessel Integrity for Westinghouse Operating Plants" which was submitted by the Westinghouse Owners' Group on December 30, 1981. The results in the attached report reflect some additional plant specific analyses that were performed after submittal of the Owners' Group report and take precedence over results reported in WCAP 10019.

As described in the attached report, the results of the analyses performed indicate vessel lifetime remaining of greater than 31 calendar years (based on an 80% capacity factor) for all transients examined. As described in WCAP 10019 the conservative acceptance criteria employed in the analyses are based on crack arrest and therefore do not indicate vessel failure at the end of vessel lifetime. Based on the results of these analyses, CP&L believes that a safety issue does not exist for the H. B. Robinson Plant for the remainder of the plant design life with regard to Pressurized Thermal Shock and that continued operation is clearly justified. CP&L, however, does recognize that it may be desirable from the standpoint of the adverse reliability consequences associated with crack initiation to continue to investigate Pressurized Thermal Shock and to analyze certain potential remedial actions to ascertain what additional margins and other benefits can be obtained. CP&L's intentions in this area are delineated in the attached report.

A049
S
1/1

P. O. Box 1551 Raleigh, N. C. 27602

We trust that this submittal is responsive to your concerns. If you have any questions on the attached material please contact our staff.

Yours truly,

E. E. Utley
Executive Vice President
Power Supply and
Engineering & Construction

E. E. Utley, having been first duly sworn, did depose and say that the information contained herein is true and correct to his own personal knowledge or based upon information and belief.

Franklin Murray
Notary (Seal)

FRANKLIN MURRAY NOTARY PUBLIC WAKE COUNTY, N. C.

My commission expires: October 4, 1986

cc: T. Novak (NRC)
W. R. Ross (NRC)
J. P. O'Reilly (NRC-Region II)

Information Concerning Pressurized Thermal Shock

H. B. Robinson Unit No. 2

January, 1982

Report Outline

Section Title	NRC Concern Addressed
1. Irradiation Data	Reference 1, Enclosure Items 1-5
2. Vessel Weld Material Information 2.1 Material Identification and Location 2.2 Chemistry 2.3 Prediction of Irradiation Effect for H. B. Robinson 2.4 RT_{NDT} Limits and Criteria for Continued Operation 2.5 Effect of Backchipping	Reference 1, Enclosure Item 6 and Reference 3, Enclosure 1 Items 1-4
3. Basis for Continued Operation 3.1 Fracture Analyses Performed 3.2 Acceptability Criteria 3.3 Warm Prestressing 3.4 Benefit of Low Leakage Core 3.5 Summary	Reference 1, Enclosure Item 7 and Reference 3, Enclosure 2 Items 1 and 4b
4. Operator Actions 4.1 Probability of Transient Occurrence 4.2 Operating Procedures	Reference 3, Enclosure 1 Item 5 and Enclosure 2 Items 1 and 4a
5. Impact of Margins	Reference 3, Enclosure 2 Item 3
6. Remedial Actions	Reference 1 and Reference 3 Enclosure 2 Item 2
7. References	

H. B. Robinson
Information Concerning
Pressurized Thermal Shock

1. Irradiation

The following information responds to Items 1-5 in the Request for Additional Information attached to D. G. Eisenhut's letter of August 21, 1981 (Reference 1):

The analytical methodology and the design basis used to predict time averaged fast neutron flux and fluence levels within the pressure vessel/surveillance capsule geometry have been discussed in some detail in WCAP-10019, "Summary Report on Reactor Vessel Integrity for Westinghouse Operating Plants" (Reference 2). The geometric, material, and power distribution information included in this submittal are fully consistent with the methodology outlined in WCAP-10019 and provide a sound basis for the prediction of the long term fast neutron environment to which the pressure vessel will be exposed.

Also included with this submittal is a summary of the results of the latest design basis neutron transport calculation performed for this vessel as well as an updated evaluation of neutron dosimetry from each of the reactor vessel surveillance capsules which have been withdrawn to date. This dosimetry re-evaluation not only reflects advances in dosimetry analysis methodology and nuclear data, but in addition establishes dosimetry results for all capsules on a consistent basis suitable for direct comparison with analytical predictions.

Geometric information for use in neutron transport calculations is provided in Figures 1-1 through 1-3. In Figure 1-1, a plan view of the reactor at the core midplane is depicted. This figure shows the reactor core, lower internals, pressure vessel, and the inner diameter of the primary biological shield. Pertinent dimensional information is also included on Figure 1-1. In Figure 1-2, a detailed description of the surveillance capsule geometry and associated structure is provided. This information is sufficient to allow accurate determinations of capsule lead factors as well as spectrum averaged reaction cross-sections for dosimetry applications. In Figure 1-3, the azimuthal location of each of the capsules included in the reactor vessel surveillance program is illustrated.

Since initial startup, two surveillance capsules have been withdrawn from the H. B. Robinson reactor. In 1973, Capsule S was removed from the 10° azimuthal position while in the 1975-1976 outage Capsule V was withdrawn from the 20° location. Neutron dosimetry from both capsules S and V were evaluated by Southwest Research Institute and the results were documented in SWRI 02-3574 and SWRI 02-4397, respectively. Early in 1977, the results for Capsule V were revised in a letter from E. B. Norris to T. Clements.

For the purposes of this submittal, the SWRI radiometric counting data have been extracted from the appropriate reports and the fluence determinations have been updated to reflect the following changes in surveillance dosimetry methodology.

1) Application of the best available nuclear data

2) Use of spectrum averaged cross-sections which include capsule perturbation effects

3) Spatial gradient corrections to measured count rates to permit neutron flux evaluations at the geometric center of the capsule

4) Review of standard used in Capsule V dosimetry

Updated results based on the Fe^{54} (n,p) Mn^{54} reaction are provided in Tables 4 and 5 for Capsule S and V, respectively. The Capsule S data exhibits a 7% variation between calculation and measurement and therefore are supportive of the analytical neutron flux predictions. However, the Capsule V measurement exceeds prediction by some 22%. A discrepency of this magnitude is slightly above that which is typical for Westinghouse reactors.

The material descriptions for each of the major zones shown in Figure 1-1 are listed in Table 1-1. The data are presented in terms of volume fractions of solid material in the defined zone of interest. Since neutron transport computations for fluence determinations are of the fixed source variety, fuel enrichment is of no consequence. However, for consistency the UO_2 material listed in Table 1-1 is taken to contain a nominal 3.2 weight percent U-235.

The core power distributions for use in the computations of time averaged neutron flux and long term neutron fluence levels are given in Figures 1-4 and 1-5 and in Table 1-2. In Figure 1-4 the relative fuel assembly power levels are given for one core octant. The information is presented relative to a core average of 1.0. Also presented in Figure 1-4 are a series of fuel assembly numbers which are used to relate spatial power distribution gradients listed in Table 1-2 with core location. All fuel assemblies labeled Number 1 are assumed to have a flat power distribution; that is, no spatial gradients exist within these assemblies. Spatial gradients for assembly types 2 through 9 are tabulated in Table 1-2. The data in Table 1-2 is oriented such that the power value in the upper left hand corner of the table represents the portion of the fuel assembly that is closest to the center of the reactor core. Values of these spatial gradients are uniformly spaced within each fuel assembly. The time averaged axial power distribution for use in neutron transport calculations is shown graphically in Figure 1-5. As discussed in WCAP-10019, these design basis power distributions are statistically based and have proven to yield satisfactory results for long term fluence predictions.

Results of neutron transport calculations for the geometry shown in Figure 1-1 are presented in Figures 1-6 through 1-8. In Figure 1-6, calculated maximum neutron flux levels at the surveillance capsule centerline, pressure vessel inner radius, 1/4 thickness location, and 3/4 thickness location are presented as a function of azimuthal angle. In Figure 1-7, the radial distribution of maximum fast neutron flux ($E > 1.0$ Mev) through the thickness of the the pressure vessel is shown. The relative axial variation of neutron flux within the vessel is given in Figure 1-8.

The data given in Figures 1-6 through 1-8 can be used directly to develop lead factors relating each surveillance capsule to any point in the pressure vessel; or, in conjunction with appropriate full power operating times, or derive fast neutron fluence distributions within the vessel. For example,

critical weld locations for the reactor vessel are shown schematically in Figure 2-1. Using the flux distributions given in Figures 1-6 through 1-8, the neutron radiation levels and hence the materials properties at these weld locations can be determined for any time in plant life.

Table 1-1

MATERIAL DESCRIPTION FOR USE IN NEUTRON TRANSPORT CALCULATIONS

Zone	Material	Volume Fraction
Reactor Core	Water	0.58864
	UO_2	0.29967
	Zirc - 4	0.10035
	Inconel - 718	0.00281
	Stainless Steel - 304	0.00062
Core Baffle	Stainless Steel - 304	1.0
Core Barrel	Stainless Steel - 304	1.0
Thermal Shield	Stainless Steel - 304	1.0
Surveillance Capsule Structure	Stainless Steel - 304	1.0
Surveillance Specimens	Low Alloy Steel	1.0
Pressure Vessel	Low Alloy Steel (Stainless Clad)	1.0

TABLE 1-2 - ROD BY ROD POWER DISTRIBUTION

ASSEMBLY 2

0.00	0.00	0.00	0.00	0.00	0.00	0.00	0.00	1.21	1.21	1.21	1.21	1.20	1.19	1.18	1.17	1.18
0.00	0.00	0.00	0.00	0.00	0.00	0.00	0.00	1.23	1.21	1.21	1.24	1.20	1.18	1.16	1.14	1.15
0.00	0.00	0.00	0.00	0.00	0.00	0.00	0.00	0.00	1.25	1.25	0.00	1.25	1.23	1.18	1.15	1.15
0.00	0.00	0.00	0.00	0.00	0.00	0.00	0.00	1.23	1.21	1.21	1.25	1.25	0.00	1.22	1.15	1.13
0.00	0.00	0.00	0.00	0.00	0.00	0.00	0.00	1.22	1.19	1.20	1.24	1.22	1.24	1.22	1.15	1.13
0.00	0.00	0.00	0.00	0.00	0.00	0.00	0.00	0.00	1.21	1.20	0.00	1.21	1.22	0.00	1.16	1.11
0.00	0.00	0.00	0.00	0.00	0.00	0.00	0.00	1.17	1.14	1.14	1.18	1.14	1.14	1.16	1.11	1.08
0.00	0.00	0.00	0.00	0.00	0.00	0.00	0.00	1.13	1.11	1.11	1.14	1.10	1.10	1.12	1.07	1.05
0.00	0.00	0.00	0.00	0.00	0.00	0.00	0.00	0.00	1.10	1.10	0.00	1.09	1.09	0.00	1.05	1.01
0.00	0.00	0.00	0.00	0.00	0.00	0.00	0.00	1.04	1.02	1.02	1.05	1.02	1.01	1.03	.98	.96
0.00	0.00	0.00	0.00	0.00	0.00	0.00	0.00	.99	.97	.97	1.00	.97	.96	.98	.93	.91
0.00	0.00	0.00	0.00	0.00	0.00	0.00	0.00	0.00	.96	.96	0.00	.96	.96	0.00	.92	.88
0.00	0.00	0.00	0.00	0.00	0.00	0.00	0.00	.89	.87	.87	.90	.89	.90	.89	.83	.81
0.00	0.00	0.00	0.00	0.00	0.00	0.00	0.00	.83	.82	.82	.85	.85	0.00	.82	.77	.74
0.00	0.00	0.00	0.00	0.00	0.00	0.00	0.00	0.00	.77	.75	0.00	.77	.74	.70	.68	.67
0.00	0.00	0.00	0.00	0.00	0.00	0.00	0.00	.67	.65	.65	.67	.65	.63	.62	.61	.60
0.00	0.00	0.00	0.00	0.00	0.00	0.00	0.00	.55	.55	.55	.55	.54	.53	.52	.52	.52

ASSEMBLY 3

1.40	1.39	1.39	1.40	1.40	1.41	1.39	1.38	1.36	1.34	1.31	1.28	1.24	1.18	1.13	1.06	.96
1.37	1.36	1.37	1.38	1.40	1.43	1.38	1.36	1.37	1.32	1.29	1.29	1.21	1.15	1.08	.99	.88
1.35	1.35	1.38	1.44	1.45	0.00	1.41	1.39	0.00	1.34	1.31	0.00	1.24	1.18	1.07	.96	.85
1.34	1.35	1.41	0.00	1.44	1.42	1.34	1.32	1.33	1.27	1.24	1.25	1.22	0.00	1.07	.94	.82
1.34	1.35	1.42	1.43	1.39	1.39	1.32	1.30	1.31	1.24	1.21	1.22	1.15	1.13	1.05	.92	.81
1.32	1.36	0.00	1.38	1.37	0.00	1.32	1.29	0.00	1.23	1.20	0.00	1.12	1.07	0.00	.90	.78
1.28	1.29	1.34	1.30	1.28	1.30	1.24	1.22	1.22	1.16	1.12	1.12	1.04	.99	.95	.84	.75
1.23	1.24	1.28	1.24	1.23	1.25	1.19	1.16	1.17	1.11	1.07	1.06	.99	.93	.90	.80	.71
1.19	1.22	0.00	1.22	1.21	0.00	1.17	1.14	0.00	1.08	1.05	0.00	.96	.91	0.00	.77	.67
1.13	1.14	1.18	1.13	1.12	1.14	1.08	1.06	1.06	1.00	.95	.95	.88	.83	.79	.70	.62
1.08	1.08	1.12	1.08	1.06	1.07	1.02	1.00	1.00	.94	.90	.89	.83	.78	.74	.65	.58
1.03	1.06	0.00	1.07	1.05	0.00	1.00	.97	0.00	.92	.88	0.00	.81	.76	0.00	.63	.55
.95	.96	1.00	1.00	.96	.96	.91	.88	.88	.83	.80	.79	.74	.71	.65	.57	.49
.88	.88	.92	0.00	.92	.90	.84	.82	.81	.77	.73	.72	.69	0.00	.59	.51	.45
.80	.79	.80	.83	.82	0.00	.78	.75	0.00	.70	.67	0.00	.62	.57	.51	.45	.40
.70	.69	.69	.69	.69	.70	.66	.65	.64	.60	.58	.57	.52	.48	.43	.39	.36
.60	.59	.59	.58	.58	.57	.55	.54	.52	.49	.47	.45	.42	.39	.36	.33	.31

TABLE 1-2 - ROD BY ROD POWER DISTRIBUTION (cont'd)

SSEMBLY 4

.98	.97	.98	.99	1.00	1.01	1.01	1.00	1.01	1.00	1.00	1.00	.98	.97	.96	.95	.95
.97	.96	.98	1.00	1.01	1.04	1.02	1.02	1.04	1.01	1.01	1.03	1.00	.98	.96	.94	.94
.98	.99	1.01	1.06	1.08	0.00	1.07	1.07	0.00	1.06	1.05	0.00	1.06	1.04	.99	.96	.95
.99	1.00	1.05	0.00	1.09	1.09	1.05	1.04	1.07	1.04	1.04	1.08	1.08	0.00	1.03	.97	.96
1.01	1.02	1.08	1.10	1.08	1.09	1.06	1.05	1.08	1.05	1.05	1.08	1.06	1.08	1.06	1.00	.97
1.01	1.05	0.00	1.09	1.09	0.00	1.08	1.08	0.00	1.08	1.07	0.00	1.07	1.07	0.00	1.02	.97
1.02	1.03	1.07	1.05	1.06	1.09	1.06	1.06	1.08	1.05	1.05	1.07	1.04	1.03	1.04	.99	.97
1.01	1.03	1.07	1.05	1.05	1.08	1.05	1.05	1.08	1.04	1.04	1.06	1.03	1.02	1.03	.98	.96
1.01	1.04	0.00	1.07	1.07	0.00	1.07	1.07	0.00	1.07	1.06	0.00	1.04	1.03	0.00	.99	.95
.99	1.01	1.05	1.03	1.04	1.07	1.04	1.03	1.06	1.02	1.02	1.04	1.00	.99	1.00	.95	.93
.99	1.01	1.05	1.03	1.03	1.06	1.03	1.02	1.05	1.01	1.01	1.03	.99	.98	.99	.94	.91
1.00	1.03	0.00	1.07	1.07	0.00	1.06	1.05	0.00	1.04	1.03	0.00	1.02	1.01	0.00	.95	.90
.98	.99	1.05	1.06	1.04	1.05	1.01	1.01	1.03	.99	.99	1.01	.98	.99	.96	.90	.86
.97	.98	1.03	0.00	1.06	1.05	1.01	1.00	1.02	.98	.98	1.00	.99	0.00	.93	.87	.84
.95	.95	.97	1.02	1.03	0.00	1.01	1.00	0.00	.99	.98	0.00	.95	.92	.86	.82	.79
.94	.94	.94	.96	.97	1.00	.97	.96	.97	.94	.93	.93	.89	.85	.81	.77	.75
.94	.93	.93	.93	.94	.94	.93	.92	.92	.90	.89	.87	.84	.81	.77	.74	.70

SSEMBLY 5

1.13	1.12	1.12	1.12	1.13	1.13	1.13	1.12	1.12	1.11	1.11	1.11	1.10	1.08	1.06	1.05	1.06
1.12	1.11	1.11	1.13	1.13	1.16	1.13	1.13	1.14	1.12	1.11	1.13	1.10	1.08	1.05	1.03	1.03
1.13	1.13	1.15	1.20	1.21	0.00	1.19	1.18	0.00	1.17	1.16	0.00	1.16	1.13	1.07	1.04	1.03
1.14	1.14	1.20	0.00	1.22	1.21	1.15	1.14	1.17	1.13	1.12	1.16	1.16	0.00	1.11	1.04	1.02
1.15	1.16	1.22	1.23	1.20	1.20	1.15	1.14	1.17	1.13	1.12	1.15	1.13	1.14	1.12	1.05	1.02
1.15	1.19	0.00	1.21	1.26	0.00	1.17	1.16	0.00	1.14	1.14	0.00	1.13	1.12	0.00	1.06	1.01
1.15	1.16	1.19	1.16	1.15	1.17	1.13	1.12	1.14	1.10	1.09	1.11	1.07	1.06	1.07	1.02	.99
1.13	1.14	1.17	1.14	1.13	1.16	1.11	1.09	1.12	1.07	1.06	1.08	1.04	1.03	1.04	.99	.96
1.12	1.15	0.00	1.15	1.14	0.00	1.11	1.10	0.00	1.08	1.06	0.00	1.04	1.03	0.00	.98	.94
1.09	1.10	1.13	1.09	1.08	1.09	1.05	1.04	1.06	1.01	1.00	1.02	.98	.96	.97	.92	.89
1.07	1.07	1.10	1.06	1.05	1.06	1.02	1.00	1.02	.97	.96	.98	.94	.92	.93	.88	.85
1.05	1.07	0.00	1.07	1.06	0.00	1.02	1.00	0.00	.97	.96	0.00	.94	.93	0.00	.87	.83
1.01	1.01	1.04	1.04	1.00	1.00	.94	.93	.94	.90	.88	.90	.88	.88	.86	.80	.77
.97	.96	.99	0.00	.98	.95	.90	.88	.89	.85	.84	.86	.84	0.00	.80	.73	.71
.91	.89	.89	.91	.91	0.00	.86	.84	0.00	.81	.80	0.00	.78	.74	.70	.66	.65
.85	.81	.82	.79	.79	.80	.76	.75	.75	.72	.70	.71	.67	.65	.62	.60	.59
.76	.72	.70	.69	.69	.69	.67	.65	.64	.63	.61	.60	.58	.57	.55	.53	.52

TABLE 1-2 - ROD BY ROD POWER DISTRIBUTION (cont'd)

ASSEMBLY 8

1.41	1.39	1.39	1.39	1.40	1.40	1.38	1.36	1.36	1.33	1.33	1.27	1.23	1.17	1.10	1.02	.92
1.38	1.37	1.37	1.39	1.40	1.43	1.37	1.37	1.38	1.31	1.28	1.28	1.20	1.13	1.05	.96	.85
1.36	1.36	1.39	1.44	1.45	0.00	1.42	1.39	0.00	1.33	1.30	0.00	1.23	1.15	1.04	.93	.81
1.35	1.37	1.43	0.00	1.44	1.43	1.35	1.32	1.33	1.27	1.24	1.24	1.20	0.00	1.04	.91	.79
1.35	1.36	1.42	1.42	1.39	1.39	1.32	1.29	1.30	1.23	1.20	1.20	1.13	1.09	1.01	.88	.76
1.33	1.37	0.00	1.40	1.38	0.00	1.32	1.29	0.00	1.23	1.19	0.00	1.10	1.04	0.00	.87	.75
1.29	1.29	1.35	1.30	1.28	1.30	1.24	1.21	1.22	1.14	1.10	1.09	1.01	.96	.91	.81	.71
1.25	1.27	1.30	1.25	1.24	1.26	1.19	1.16	1.17	1.10	1.06	1.04	.96	.91	.87	.77	.68
1.23	1.26	0.00	1.24	1.23	0.00	1.18	1.15	0.00	1.08	1.04	0.00	.94	.89	0.00	.75	.64
1.18	1.17	1.20	1.16	1.14	1.15	1.09	1.06	1.06	.99	.95	.94	.87	.82	.78	.69	.60
1.12	1.12	1.16	1.10	1.09	1.10	1.04	1.01	1.01	.94	.90	.89	.82	.77	.73	.64	.56
1.07	1.10	0.00	1.09	1.07	0.00	1.01	.97	0.00	.91	.88	0.00	.80	.75	0.00	.61	.52
1.00	1.00	1.04	1.03	.99	.98	.92	.88	.88	.83	.80	.79	.73	.70	.64	.55	.48
.92	.92	.95	0.00	.93	.91	.84	.81	.82	.76	.73	.72	.69	0.00	.58	.58	.43
.84	.82	.83	.85	.84	0.00	.79	.77	0.00	.71	.68	0.00	.62	.57	.50	.44	.38
.75	.73	.73	.72	.72	.72	.69	.66	.65	.61	.58	.57	.52	.48	.43	.39	.36
.66	.64	.63	.62	.61	.65	.58	.56	.54	.52	.49	.47	.44	.41	.37	.34	.31

ASSEMBLY 7

1.01	1.00	1.00	1.01	1.03	1.04	1.03	1.03	1.03	1.02	1.01	1.01	1.01	.99	.97	.96	.96
1.00	.99	1.00	1.03	1.04	1.07	1.04	1.04	1.06	1.03	1.03	1.06	1.02	1.00	.97	.95	.95
1.00	1.00	1.03	1.08	1.10	0.00	1.09	1.08	0.00	1.07	1.08	0.00	1.07	1.05	.99	.96	.94
1.01	1.02	1.08	0.00	1.11	1.11	1.06	1.05	1.08	1.06	1.05	1.09	1.08	0.00	1.03	.97	.95
1.02	1.04	1.09	1.11	1.09	1.10	1.06	1.06	1.09	1.06	1.05	1.08	1.06	1.07	1.04	.98	.95
1.03	1.07	0.00	1.10	1.10	0.00	1.10	1.09	0.00	1.08	1.08	0.00	1.07	1.06	0.00	1.00	.96
1.02	1.04	1.08	1.06	1.06	1.09	1.06	1.06	1.09	1.05	1.04	1.06	1.02	1.01	1.02	.98	.95
1.02	1.03	1.07	1.05	1.05	1.09	1.06	1.05	1.08	1.04	1.03	1.05	1.01	1.00	1.02	.96	.93
1.02	1.05	0.00	1.07	1.08	0.00	1.08	1.08	0.00	1.06	1.05	0.00	1.03	1.02	0.00	.97	.92
1.01	1.02	1.06	1.05	1.05	1.08	1.04	1.04	1.06	1.02	1.01	1.03	1.00	.98	.99	.93	.91
1.00	1.02	1.07	1.05	1.05	1.07	1.04	1.03	1.05	1.01	1.00	1.03	.98	.97	.97	.92	.89
1.00	1.04	0.00	1.08	1.07	0.00	1.06	1.05	0.00	1.03	1.03	0.00	1.00	.99	0.00	.93	.87
.99	1.01	1.06	1.07	1.05	1.06	1.02	1.00	1.02	.99	.98	1.00	.97	.98	.95	.86	.84
.97	.98	1.03	0.00	1.06	1.05	1.00	.99	1.01	.97	.96	.98	.98	0.00	.91	.84	.80
.96	.95	.98	1.02	1.03	0.00	1.01	1.00	0.00	.98	.96	0.00	.94	.91	.84	.79	.76
.94	.94	.94	.95	.96	.98	.96	.95	.96	.92	.92	.92	.87	.83	.79	.75	.72
.94	.93	.93	.93	.93	.94	.93	.92	.91	.90	.88	.86	.83	.80	.76	.71	.67

TABLE 1-2 - ROD BY ROD POWER DISTRIBUTION (cont'd)

ASSEMBLY 8

1.36	1.34	1.32	1.32	1.33	1.32	1.29	1.26	1.26	1.22	1.18	1.15	1.10	1.04	.98	.90	.81
1.34	1.32	1.32	1.33	1.33	1.35	1.29	1.28	1.28	1.22	1.18	1.17	1.09	1.02	.94	.85	.74
1.34	1.32	1.35	1.39	1.39	0.00	1.35	1.31	0.00	1.24	1.21	0.00	1.12	1.04	.93	.82	.71
1.34	1.35	1.40	0.00	1.40	1.41	1.30	1.26	1.26	1.19	1.15	1.15	1.10	0.00	.94	.80	.68
1.35	1.36	1.41	1.40	1.37	1.36	1.28	1.24	1.25	1.17	1.13	1.12	1.05	1.00	.92	.78	.66
1.35	1.34	0.00	1.40	1.37	0.00	1.29	1.26	0.00	1.17	1.13	0.00	1.03	.96	0.00	.78	.65
1.33	1.33	1.38	1.32	1.29	1.30	1.23	1.19	1.19	1.11	1.05	1.04	.96	.89	.84	.73	.62
1.31	1.32	1.35	1.29	1.26	1.27	1.20	1.16	1.15	1.07	1.02	1.00	.92	.85	.81	.70	.59
1.31	1.33	0.00	1.29	1.27	0.00	1.20	1.15	0.00	1.07	1.02	0.00	.91	.85	0.00	.68	.56
1.27	1.26	1.29	1.23	1.20	1.20	1.13	1.08	1.07	1.00	.95	.92	.85	.79	.74	.63	.53
1.24	1.23	1.26	1.20	1.16	1.16	1.08	1.04	1.03	.95	.90	.89	.81	.75	.70	.60	.50
1.21	1.23	0.00	1.20	1.16	0.00	1.07	1.03	0.00	.94	.90	0.00	.80	.74	0.00	.58	.48
1.17	1.15	1.18	1.15	1.09	1.07	.99	.95	.93	.87	.82	.73	.74	.69	.63	.53	.44
1.11	1.09	1.10	0.00	1.06	1.01	.93	.89	.88	.81	.77	.75	.70	0.00	.58	.48	.41
1.05	1.01	.99	1.00	.98	0.00	.89	.85	0.00	.77	.73	0.00	.64	.58	.51	.44	.37
.97	.92	.89	.87	.85	.84	.79	.75	.73	.67	.63	.61	.55	.50	.44	.39	.34
.87	.81	.77	.75	.73	.73	.69	.66	.63	.59	.55	.58	.48	.43	.39	.35	.31

ASSEMBLY 9

1.06	1.04	1.04	1.04	1.06	1.07	1.06	1.05	1.06	1.05	1.05	1.04	1.04	1.02	1.01	1.00	1.00
1.04	1.03	1.03	1.05	1.07	1.09	1.06	1.06	1.08	1.05	1.05	1.07	1.04	1.02	.99	.98	.97
1.04	1.03	1.06	1.10	1.11	0.00	1.11	1.09	0.00	1.08	1.09	0.00	1.08	1.06	1.00	.97	.96
1.04	1.05	1.10	0.00	1.12	1.12	1.08	1.06	1.09	1.06	1.06	1.09	1.08	0.00	1.03	.98	.96
1.06	1.07	1.11	1.12	1.11	1.11	1.07	1.06	1.09	1.05	1.05	1.07	1.05	1.06	1.04	.98	.95
1.07	1.09	0.00	1.12	1.11	0.00	1.09	1.09	0.00	1.07	1.06	0.00	1.05	1.04	0.00	.99	.95
1.06	1.06	1.11	1.08	1.07	1.09	1.06	1.05	1.07	1.03	1.02	1.04	1.00	.99	1.00	.96	.93
1.05	1.06	1.09	1.06	1.06	1.09	1.05	1.04	1.06	1.02	1.01	1.02	.99	.97	.99	.94	.91
1.06	1.08	0.00	1.09	1.09	0.00	1.07	1.06	0.00	1.04	1.02	0.00	1.00	.99	0.00	.94	.90
1.05	1.05	1.08	1.06	1.05	1.07	1.03	1.02	1.04	.99	.98	.99	.96	.94	.95	.90	.88
1.05	1.05	1.09	1.06	1.05	1.06	1.02	1.01	1.02	.98	.97	.99	.95	.93	.93	.89	.86
1.04	1.07	0.00	1.09	1.07	0.00	1.04	1.02	0.00	.99	.99	0.00	.96	.94	0.00	.88	.84
1.04	1.04	1.08	1.08	1.05	1.05	1.00	.99	1.00	.96	.95	.96	.92	.93	.90	.84	.80
1.02	1.02	1.06	0.00	1.06	1.04	.99	.97	.99	.94	.93	.94	.93	0.00	.86	.79	.76
1.01	.99	1.00	1.03	1.04	0.00	1.00	.99	0.00	.95	.93	0.00	.90	.86	.80	.75	.72
1.00	.98	.97	.98	.98	.99	.96	.94	.94	.90	.89	.88	.84	.79	.75	.71	.68
1.00	.97	.96	.96	.95	.95	.93	.91	.90	.88	.86	.84	.80	.76	.72	.68	.63

TABLE 1-2 - ROD BY ROD POWER DISTRIBUTION (cont'd)

ASSEMBLY 10

1.36	1.34	1.34	1.34	1.35	1.35	1.33	1.31	1.31	1.27	1.24	1.21	1.17	1.11	1.05	.97	.87
1.34	1.32	1.32	1.35	1.36	1.38	1.33	1.32	1.33	1.26	1.23	1.23	1.15	1.09	1.01	.92	.81
1.32	1.32	1.35	1.40	1.41	0.00	1.38	1.35	0.00	1.29	1.26	0.00	1.18	1.10	.99	.89	.77
1.32	1.33	1.39	0.00	1.40	1.40	1.32	1.29	1.29	1.23	1.20	1.20	1.15	0.00	1.00	.87	.75
1.33	1.33	1.39	1.40	1.37	1.37	1.29	1.26	1.27	1.20	1.16	1.16	1.09	1.06	.98	.85	.73
1.32	1.35	0.00	1.41	1.36	0.00	1.30	1.27	0.00	1.20	1.16	0.00	1.07	1.01	0.00	.84	.73
1.29	1.29	1.35	1.30	1.28	1.29	1.23	1.20	1.20	1.13	1.08	1.07	.99	.93	.89	.79	.69
1.26	1.28	1.31	1.26	1.24	1.26	1.19	1.16	1.15	1.08	1.04	1.03	.95	.89	.85	.75	.66
1.26	1.28	0.00	1.26	1.25	0.00	1.19	1.15	0.00	1.07	1.03	0.00	.93	.88	0.00	.73	.63
1.22	1.22	1.24	1.19	1.17	1.17	1.11	1.07	1.07	1.00	.95	.94	.87	.81	.77	.67	.59
1.18	1.18	1.21	1.15	1.13	1.13	1.06	1.02	1.02	.95	.90	.90	.82	.77	.73	.63	.55
1.15	1.17	0.00	1.15	1.12	0.00	1.04	1.00	0.00	.92	.89	0.00	.73	.75	0.00	.61	.58
1.10	1.09	1.12	1.10	1.05	1.03	.96	.92	.91	.85	.81	.80	.74	.70	.64	.55	.48
1.04	1.02	1.04	0.00	1.00	.96	.89	.85	.85	.79	.75	.74	.69	0.00	.58	.50	.43
.98	.94	.93	.94	.92	0.00	.84	.81	0.00	.74	.70	0.00	.63	.58	.51	.44	.39
.90	.85	.82	.80	.78	.78	.73	.70	.68	.63	.60	.58	.53	.48	.44	.39	.35
.81	.74	.71	.68	.66	.65	.62	.59	.56	.53	.50	.48	.44	.41	.37	.34	.31

TABLE 1-3

COMPARISON OF MEASURED AND CALCULATED FAST NEUTRON FLUX

MONITOR SATURATED ACTIVITIES FOR CAPSULE S

Reaction and Axial Location	Radial Location (cm)	Saturated Activity (DPS/mg)	Adjusted Saturated Activity (DPS/mg)	Fast Neutron Flux (n/cm^2-sec)	
				Capsule S	Calculated
$Fe^{54}(n,p)Mn^{54}$					
Top	192.46	4.57×10^3	5.43×10^3	1.24×10^{11}	
Top middle	192.46	4.74×10^3	5.64×10^3	1.29×10^{11}	
Middle	192.46	4.59×10^3	5.46×10^3	1.25×10^{11}	
Bottom middle	192.46	5.26×10^3	6.26×10^3	1.43×10^{11}	
Bottom	192.46	4.40×10^3	5.24×10^3	1.20×10^{11}	
Average				1.28×10^{11}	1.19×10^{11}

TABLE 1-4

COMPARISON OF MEASURED AND CALCULATED FAST NEUTRON FLUX

MONITOR SATURATED ACTIVITIES FOR CAPSULE V

Reaction and Axial Location	Radial Location (cm)	Saturated Activity (DPS/mg)	Adjusted Saturated Activity (DPS/mg)	Fast Neutron Flux (n/cm^2-sec) Capsule V	Calculated
$Fe^{54}(n,p)Mn^{54}$					
Top	192.46	2.45×10^3	2.89×10^3	5.35×10^{10}	
Top middle	192.46	2.84×10^3	3.35×10^3	6.20×10^{10}	
Middle	192.46	2.68×10^3	2.69×10^3	5.85×10^{10}	
Bottom middle	192.46	2.63×10^3	3.10×10^3	5.74×10^{10}	
Bottom	192.46	2.95×10^3	3.49×10^3	6.45×10^{10}	
Average				5.92×10^{10}	4.84×10^{10}

FIGURE 1-1

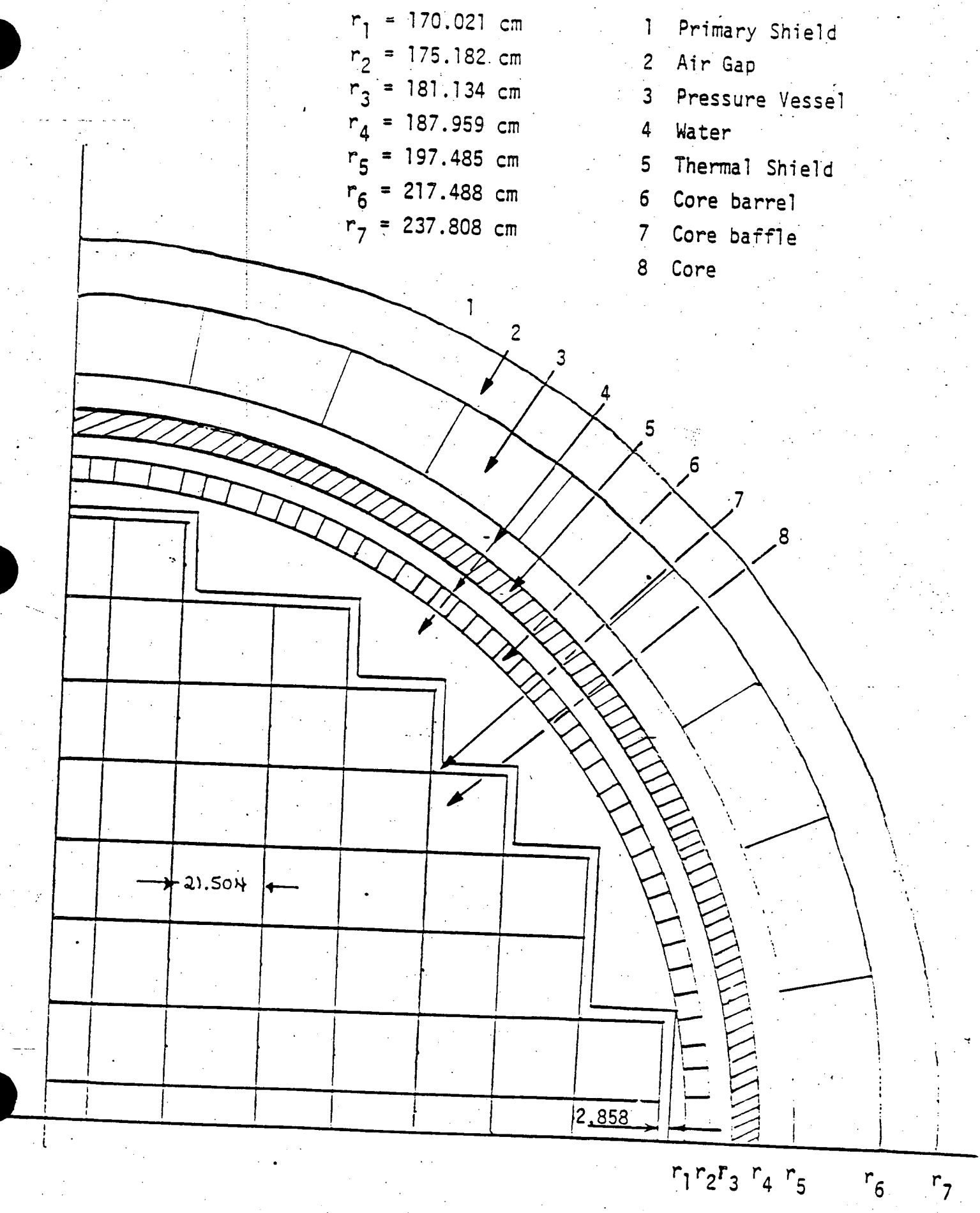

(r, θ) Reactor Geometry

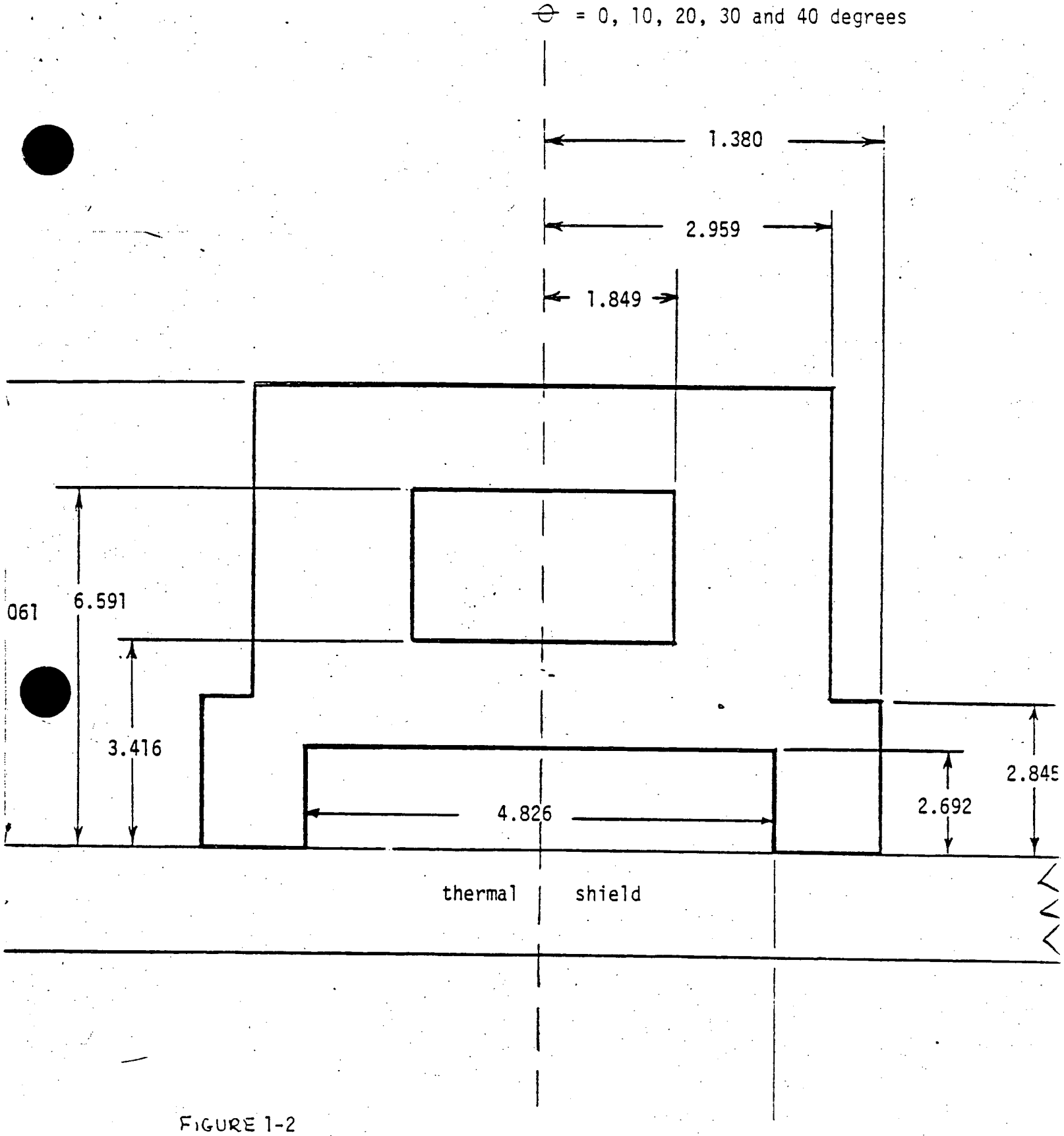

FIGURE 1-2

- Surveillance capsule dimensions (cm)

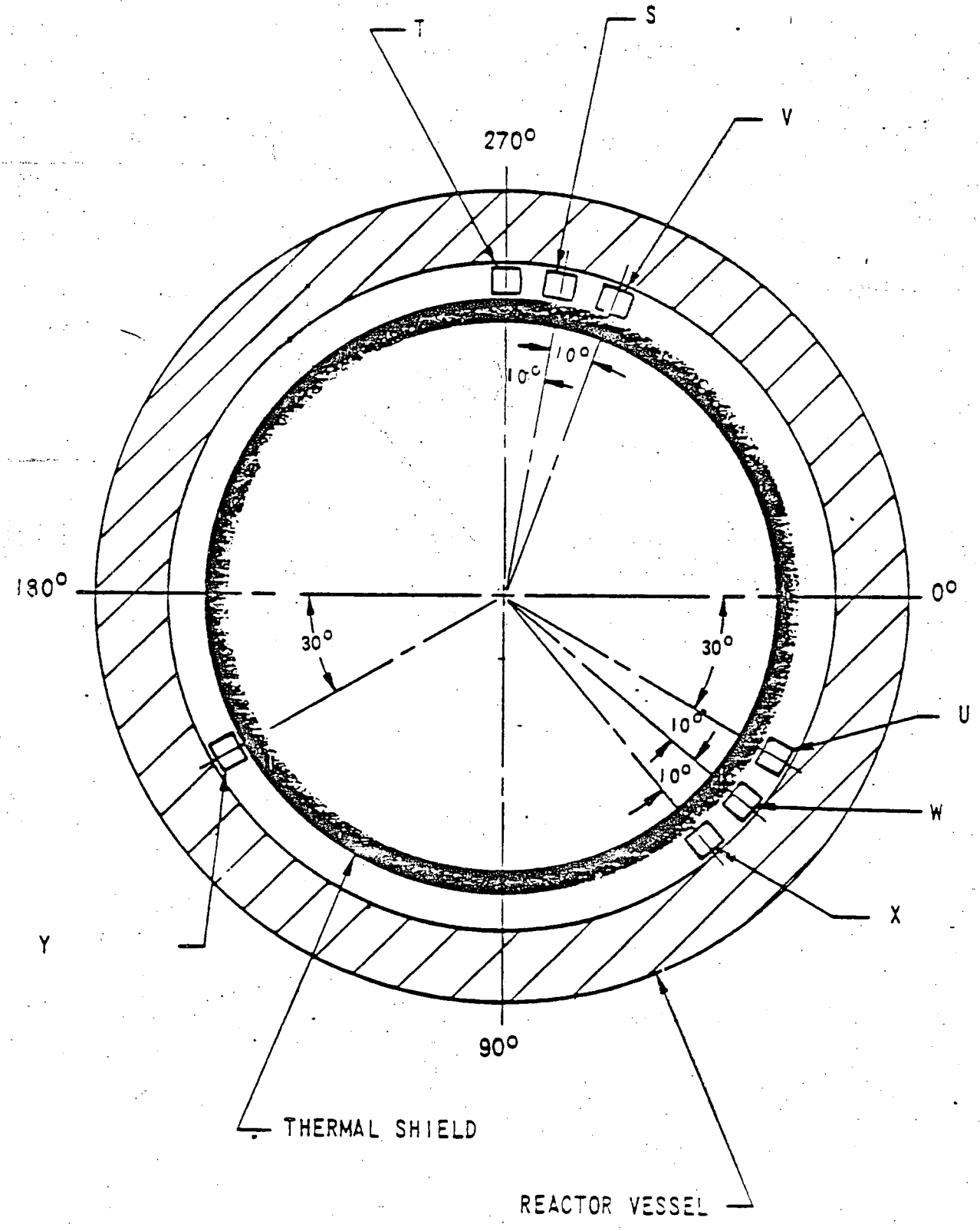

FIGURE 1-3

Arrangement of Surveillance Capsules

Long Term Radial Power Distribution

	H	G	F	E	D	C	B	A
8	0.73 (1)							
9	0.83 (1)	0.97 (1)						
10	1.05 (1)	0.95 (1)	1.07 (1)					
11	0.97 (1)	1.16 (1)	1.00 (1)	1.11 (1)				
12	1.11 (1)	1.11 (1)	1.13 (1)	1.03 (1)	0.92 (9)			
13	1.11 (1)	0.97 (1)	1.02 (1)	1.04 (7)	0.85 (8)			
14	0.95 (1)	1.07 (4)	1.12 (5)	0.80 (6)				
15	0.93 (2)	0.77 (3)						

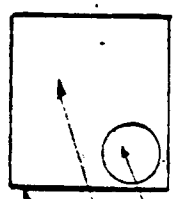

Figure 1-4

FIGURE 1-5

Time Averaged Axial Power Distribution

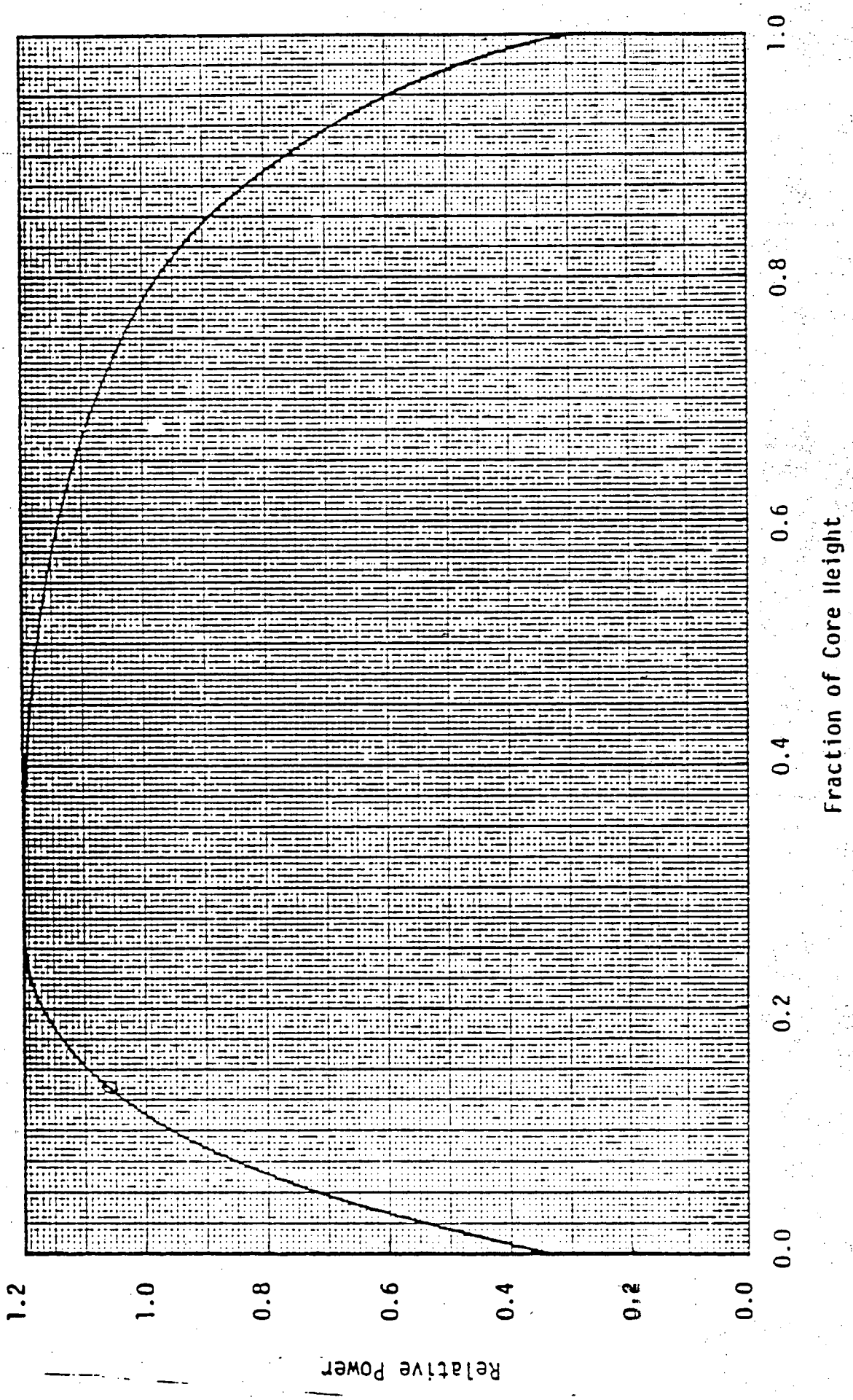

(1) Surveillance capsules at radius = 190.900 cm

(2) Surveillance capsules at radius = 192.488 cm

(3) Reactor vessel wall inner surface at radius = 197.635 cm

(4) Reactor vessel wall, 1/4 thickness, at radious = 202.485 cm

(5) Reactor vessel wall, 3/4 thickness, at radius = 212.487 cm

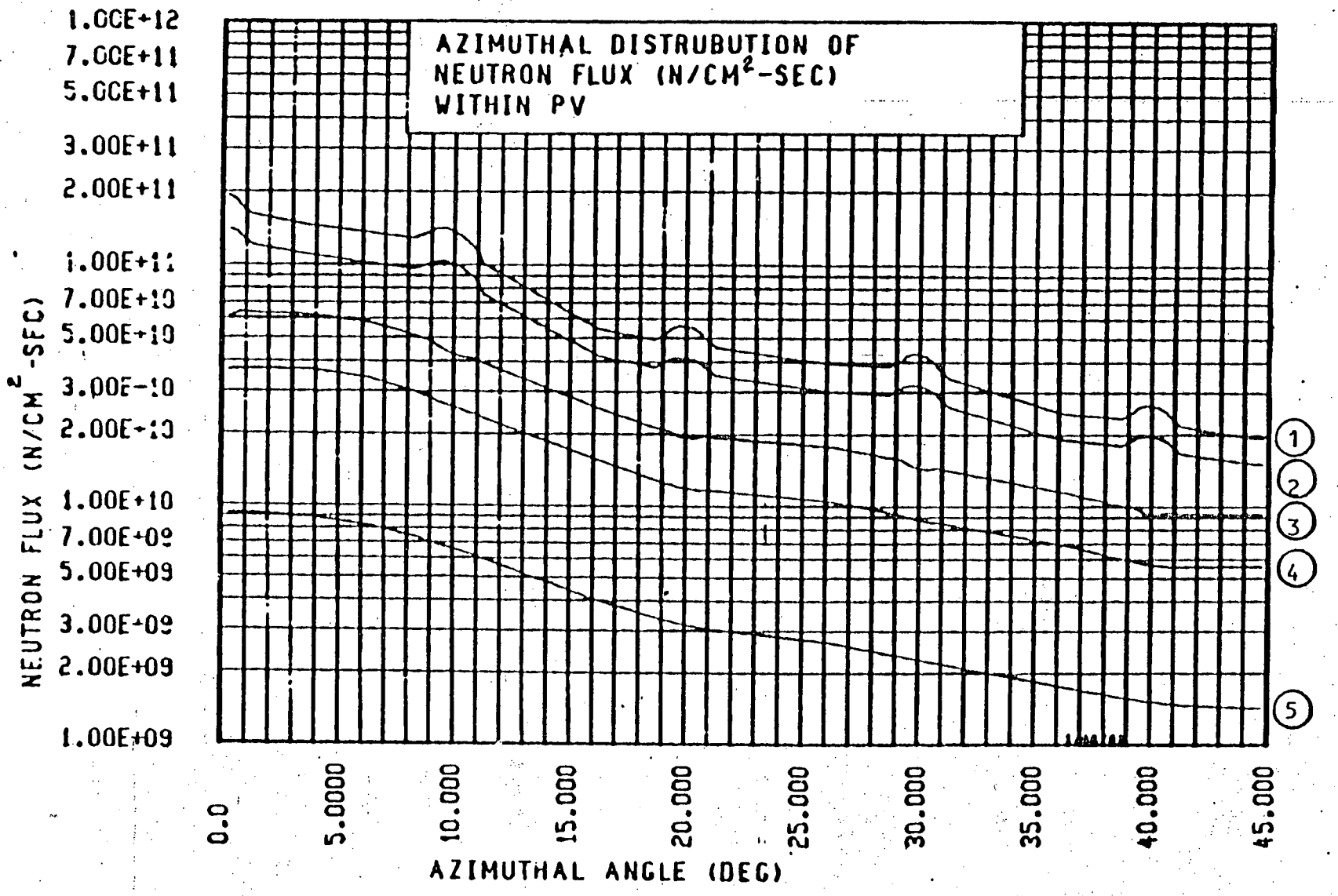

FIGURE 1-6

FIGURE 1-7

RADIAL DISTRIBUTION OF FAST NEUTRON FLUX (E > 1.0 Mev) WITHIN THE PRESSURE VESSEL WALL

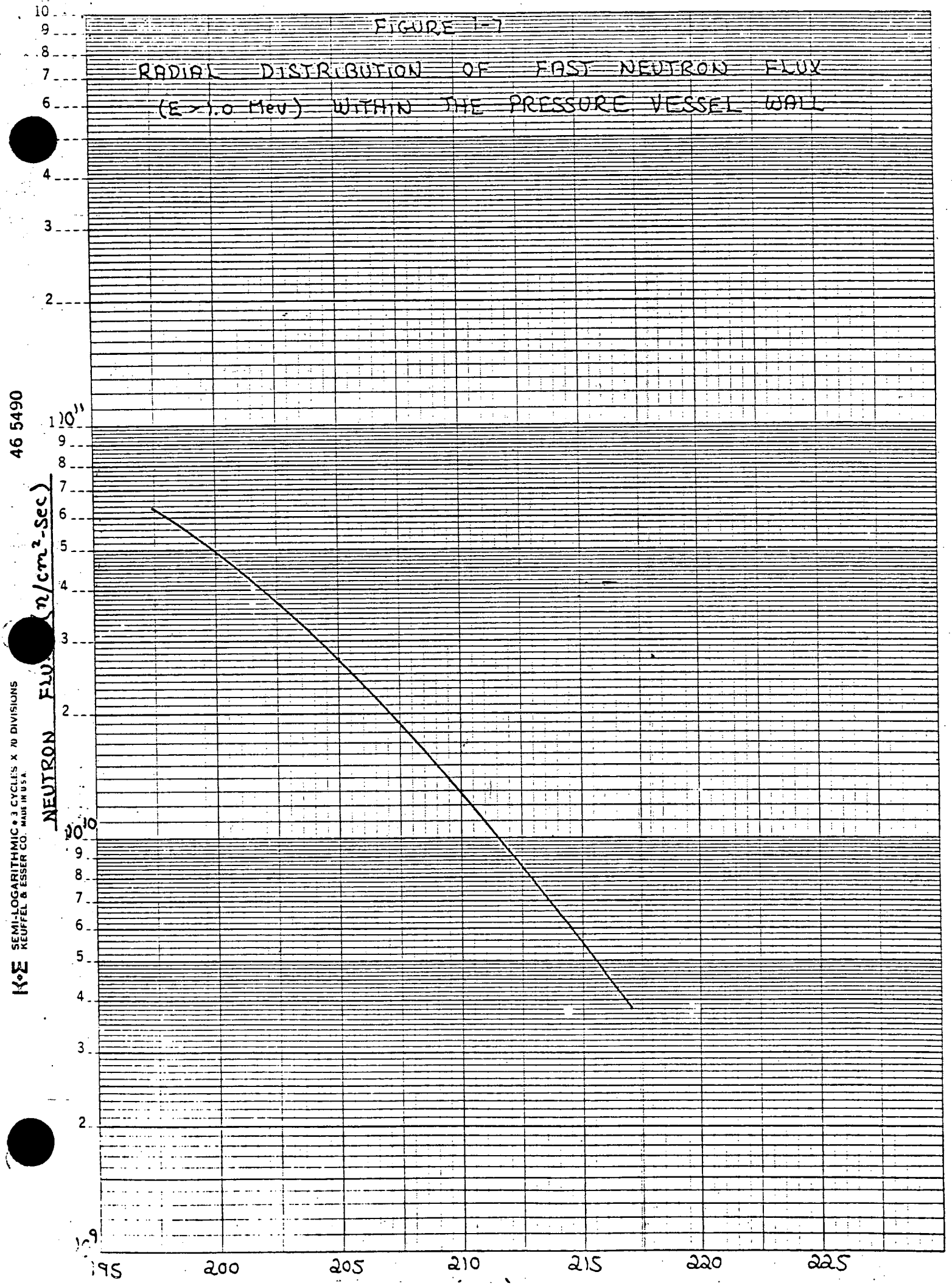

Figure 1-8

RELATIVE AXIAL VARIATION OF FAST NEUTRON FLUX (E > 1.05MeV) WITHIN THE PRESSURE VESSEL

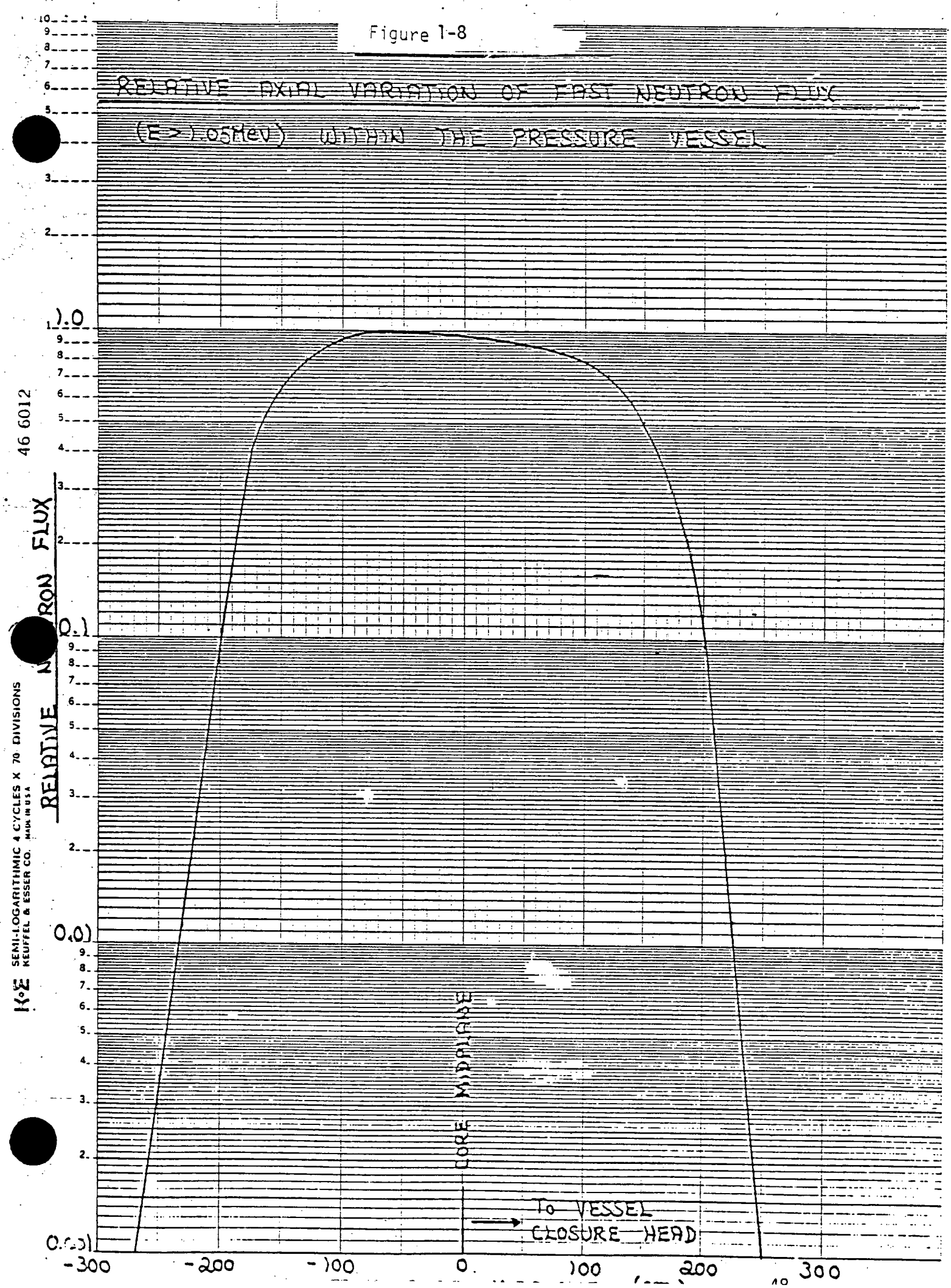

2. VESSEL WELD MATERIAL INFORMATION

The following information responds to Item 6 in the Request for Additional Information attached to D. G. Eisenhut's letter of August 21, 1981 (Reference 1) and to Items 1-4 in Enclosure (1) of T. Novak's letter of December 18, 1981 (Reference 3). Additional information concerning Operator Actions and probabilities of events (Items 1 and 46 of Reference 3) are discussed in Section 4 of this submittal.

2.1 Material Identification and location

The H. B. Robinson Unit 2 reactor vessel was manufactured by Combustion Engineering and shipped to the site on July 12, 1968. It was fabricated from SA302B and SA302A plate material, with three vertical weld seams in each shell course, and three shell courses, as shown in Figure 2-1. The numerical designations of the plates and welds used in the vessel are also shown in Figure 2-1, along with the location of the reactor core, relative to these materials. End-of-life fluences are identified with each weld location.

2.2 Chemistry

The chemistry of the three plates used on the intermediate shell course was reported in Reference [4] and is summarized in Table 2.1. The nickel content of the base metal, while not directly measured, is less than 0.20 weight percent, because the steel used is SA302B.

There are no records of "as deposited" weld chemistry available for the longitudinal welds in the intermediate shell, but a representative chemistry is reported in Reference [4] and repeated in Table 2-1. The specific weld tested was representative of the intermediate to nozzle shell circumferential seam and is identified as a high nickel weld.

All the longitudinal welds were made at Combustion Engineering during a time period when low nickel welds were the standard practice. Welds during this time period were made with RACO3 weld wire and ARCOS B-5 flux. A series of chemistry analyses from welds made for other vessels at Combustion Engineering during this time frame is provided in Table 2-2. This table provides representative properties for this type of weld, from which can be inferred the properties of the H. B. Robinson intermediate shell welds.

A study was made of the available weld inspection records from Combustion Engineering to identify the date at which the practice of adding nickel to the welds was begun. When nickel was added, an additional weld wire was added to the RACO 3, and this was called out as the weld inspection records as "Ni 200". A summary of available weld inspection records is provided in Table 2-3, and from the table it can be seen that the addition of nickel began sometime between April 1965 and September 1966. Weld seams identified for plant B on Table 2-3 are for the H. B. Robinson Unit #2 reactor vessel.

Identification of the beltline region welds are presented in Table 2.5. This information was obtained from weld inspection records from Combustion Engineering. As noted in this table, the circumferential seams were welded using the practice of adding nickel to the weld. When the nickel was added an additional weld wire was called out on the CE reports as shown on Table 2.5 as

"Ni 200". As seen from Table 2-3, longitudinal weld seams were made in 1964 prior to the practice of adding nickel to welds so that nickel content of the welds is low, < .20%.

Because both high nickel and low nickel welds were used in the beltline region, both trend curves derived for low nickel materials and Regulatory Guide 1.99 Rev. 1 were used in the analyses. The technical basis for the low nickel trend curves is provided in WCAP 10019 (Reference 2).

2.3 Prediction of Irradiation Effect for H. B Robinson

Since the longitudinal weld metal copper content is unknown, the copper content was assumed to be 0.35 weight percent, and the upper trend curve (curve 2) (Reference 27) for low nickel was used to predict irradiation effects for the intermediate shell longitudinal welds. Note that the highest copper content observed in any of the low nickel welds for which chemistry is available was 0.27 weight percent, so the use of curve 2 may be overly conservative.

Predicted values of RT_{NDT} for the most critical intermediate shell plate and weld materials are found in Table 2-4. Some portion of the critical shell plates is located in the peak fluence region, so this fluence was used in predictions. The governing longitudinal weld (2-273C) is that located nearest to a peak fluence region, only 4.5 degrees from the cardinal axis (which corresponds to the peak as shown in Section 1). The intermediate to lower shell circumferential weld was also evaluated because of its assumed high copper and known high nickel content.

The initial values for RT_{NDT} for the intermediate shell plate and weld seams were estimated, using the NRC Branch Technical Position MTEB 5-2.

The values of RT_{NDT} after 7.2 effective full power years shown in Table 2-4 were calculated using the irradiation damage curves in Reference [2] for low nickel and Regulatory Guide 1.99 Rev. 1 where applicable; as was the future rate of RT_{NDT} increase listed at the bottom of the table. Note that the use of the low nickel curves result in lower predicted values of RT_{NDT} than those values provided in earlier submittals, but the technical basis used in the predictions is more consistent with available surveillance data. The damage predictions of Table 2-4 show that the circumferential weld seam is governing. However since the longitudinal welds are subjected to higher stress, both circumferential and longitudinal welds were considered in the analyses.

The surveillance weld for H. B. Robinson 2 is representative of the nozzle shell to the intermediate shell weld circumferential seam. This weld which has a chemistry of .34% Cu, .021% P, and 1.20% Ni was found to be below the .35% Cu Reg. Guide 1.99 curve as shown in Figure 2-2 (RT_{NDT} = 210°F for a fluence of .508 x 10^{19} n/cm^2, Reference [5]). However, prediction of the shift in RT_{NDT} for the circumferential welds reported in Table 2-4 are based on the .35% Cu Reg. Guide 1.99 curve, so that the reported RT_{NDT} shift is expected to be larger than actual for early reactor life, but would be the same for end-of-life fluence, which is based on the Reg. Guide 1.99 upper limit.

2.4 RT_{NDT} Limits and Criteria for Continued Operation

The identification of a value of RT_{NDT} which could limit further safe operation of a reactor pressure vessel is not appropriate. Although such a simplistic criterion is perhaps desirable, it should not be used as the sole parameter to determine the acceptability of the reactor vessel for any specific plant, or to compare plants. The acceptability of a vessel for continued operation is dependent on many variables in addition to the material properties, and therefore a limiting material property could only be established for a prescribed transient with a fixed set of conditions.

The most appropriate criteria for continued operation should be based on fracture analysis results,since these results incorporate all the variables which can affect integrity. The criteria adopted have been detailed in WCAP 10019, Section 2, and are treated in this report in the section which follows.

The value of RT_{NDT} at the end of vessel design life was calculated using the trend curves for low nickel materials for the longitudinal welds and the Reg. Guide 1.99 trend curve for the circumferential welds and plate material. These values are shown in Table 2-4 as well as the RT_{NDT} at the inner surface and at the quarter thickness location. As stated above the values of RT_{NDT} indicate that the circumferential weld would be limiting but the stresses could be higher in the longitudinal seams, so that both were evaluated in the analyses for H. B. Robinson Unit 2.

For this report, all the limiting thermal transients were evaluated on a plant specific basis to evaluate the impact of key plant specific parameters such as fluence, material properties, vessel geometry and weld locations on the acceptable vessel lifetimes for H. B. Robinson Unit 2.

Using the results in Section 3 below, end of design life for the vessel, as a minimum, would be expected for all the limiting transients with the benefit of warm-prestressing. The maximum value of RT_{NDT} at end of life is not suggested to be a limiting RT_{NDT} value for H. B. Robinson Unit 2. Violation of acceptance criteria described in Reference [2] would not be expected to occur until some time after end-of-life. In summary, the most appropriate criteria for continued operation should be based upon fracture analysis results. These results incorporate all the variables affecting vessel integrity.

2.5 Effect of Backchipping

The weld seams in the Robinson vessel were constructed with backchipping at the inner surface of the vessel which removed material from the inner surface to a stated depth of 3/8" for the circumferential weld. The backchipped regions were subsequently rewelded so that the weld in this region contains no more than .05 percent Cu. The justification of this weld chemistry is given in Reference [6]. This effect is used as a secondary argument for circumferential weld integrity as presented in Sections 3 and 5 of this submittal. Backchipping is not considered for the longitudinal welds since the inner surface was machined, thereby removing the backchipped region.

TABLE 2-1

H. B. ROBINSON UNIT 2 REACTOR VESSEL

Critical Weld Seams	Weld Wire Heat No.	Flux Lot No.	Chemical Composition (Wt.%)							
			C	Mn	P	S	Si	Mo	Ni	Cu
Nozzle Shell to Inter Shell Girth Seam 10-273	W5214[a]	3617	.077	1.05	.021	.012	.26	.50	1.20	.34
Inter, Shell Long. Seams 2-273, A, B & C	86054B	4E5F	Not Available[c]							
Inter, to Lower Shell Girth Seam 11-273	34B009[b]	3724	Not Available							
Lower Shell Long Seams 3-373 A, B & C	86054B	NA	Not Available[c]							

a) Ni Wire Added (Heat No. N7753A)

b) Ni Wire Added (Heat No. N9879A)

c) No Ni Wire Added (Ni estimated to be <.20%)

Copper content of seams where not reported was not controlled and therefore assumed to be high (0.35%)

TABLE 2-2

CHEMISTRY FOR REPRESENTATIVE LOW NICKEL WELDS
(RACO3 Weld Wire, ARCOS B-5 Flux)

	C	Mn	Si	P	S	Mo	Cu	V	Ni
San Onofre 1	.11	1.50	.35	.017	.013	.47	.19	.03	-
Connecticut Yankee	.17	1.25	.32	.015	.011	.53	.22	-	.11
Big Rock Point	.12	1.25	.28	.014	.012	.53	.27	-	.10
Jose Cabrera	.047	1.36	.35	.020	.019	.48	.22	-	.046

TABLE 2-3

CHRONOLOGY OF WELD INSPECTION RECORDS FROM COMBUSTION ENGINEERING

Weld wire/flux	Date	Weld Location	Plant
RACO3, ARCOS B-5	Nov-Dec 1963	Intermed. shell vert. seams	A
"	Feb-Mar 1964	Lower shell vert. seams	A
"	Feb-Mar 1964	Lower shell vert. seams	B
"	Oct 1964	Center shell vert. seams	B
"	Oct-Nov 1964	Nozzle Shell to intermed. shell	A
"	Jan-Feb 1965	Bottom Head to intermed. shell	A
"	Mar-Apr 1965	Intermed. to Lower shell	A
RACO 3, ARCOS B-5	Sept-Oct 1966	Nozzle shell to intermed. shell	B
+ Ni 200 wire	Jun-Jul 1967	Intermed. shell to lower shell	B

TABLE 2-4

H. B. ROBINSON UNIT 2 REACTOR VESSEL

Component	Plate or Seam No.	Cu (%)	P (%)	Ni (%)	Initial RT_{NDT}(a) (°F)	7.2 EFPY Operation: Inner Surface Fluence 10^{19} n/cm^2	Inner Surface RT_{NDT} (°F)	1/4 Thickness Fluence 10^{18} n/cm^2	1/4 Thickness RT_{NDT} (°F)
Nozzle shell to inter. shell weld	10-273	.34	.021	1.20	0	.562	247(b)	3.39	192(b)
Inter. Shell plate	W10201-4	.12	.007	NA	46	1.42	141(b)	8.55	120(b)
Inter. Shell long. weld	2-273C	.35	-	<.20	0	1.30	183(d)	7.84	171(d)
Inter. shell to lower shell weld	11-273	.35(c)	-	>.50	0	1.24	290(b)	7.46	261(b)
Lower shell long. weld	3-273A	.35	-	<.20	0	1.24	182(d)	7.46	170(d)

Future Rate of RT_{NDT} Increase(b)

Shell plate ~107°F for remaining design life.

Weld seams	~ °F/EFPY for next 10 EFPY	~ °F for remaining design life.
Longitudinal(d)	~2 to 3	~1 to 2
Circumferential(b)	~5 to 6	~3 to 4

(a) 1/4 thickness for shell plate and inner surface for weld seams.

(b) Based on SLOPE of prediction curves presented in Reg. Guide 1.99 Rev. 1.

(c) Estimated to be similar to weld seam 10-273 (Cu assumed to be .35% based on Reg. Guide 1.99, Rev. 1).

(d) Low Nickel Trend Curves as Presented in Ref. [2].

TAB[illegible]-5

IDENTIFICATION OF H.B. ROBINSON UNIT NO. 2 REACTOR VESSEL BELTLINE REGION WELD METAL

Weld Location	Weld Process	WELD WIRE Type	WELD WIRE Heat No.	FLUX Type	FLUX Lot No.
Nozzle Shell to Inter. Shell Circle Seam 10-273	Submerged Arc	RACO 3 +Ni 200	W5214 N7753A	Linde 1092	3617
Inter. Shell Vertical Seams	Submerged Arc	RACO 3	86054B	ARCOS B5	4E5F
Inter. Shell to Lower Shell Circle Seam 11-273	Submerged Arc	RACO 3 +Ni 200	34B009 N9879A	Linde 1092	3724
Lower Shell Veritical Seams	Submerged Arc	RACO 3	86054B	ARCOS B5	
Surveillance Weld	Submerged Arc	RACO 3 +Ni 200	W5214 N7753A	Linde 1092	3617

FIGURE 2-1

IDENTIFICATION AND LOCATION OF BELTLINE REGION MATERIAL FOR THE H. B. ROBINSON UNIT NO. 2 REACTOR VESSEL

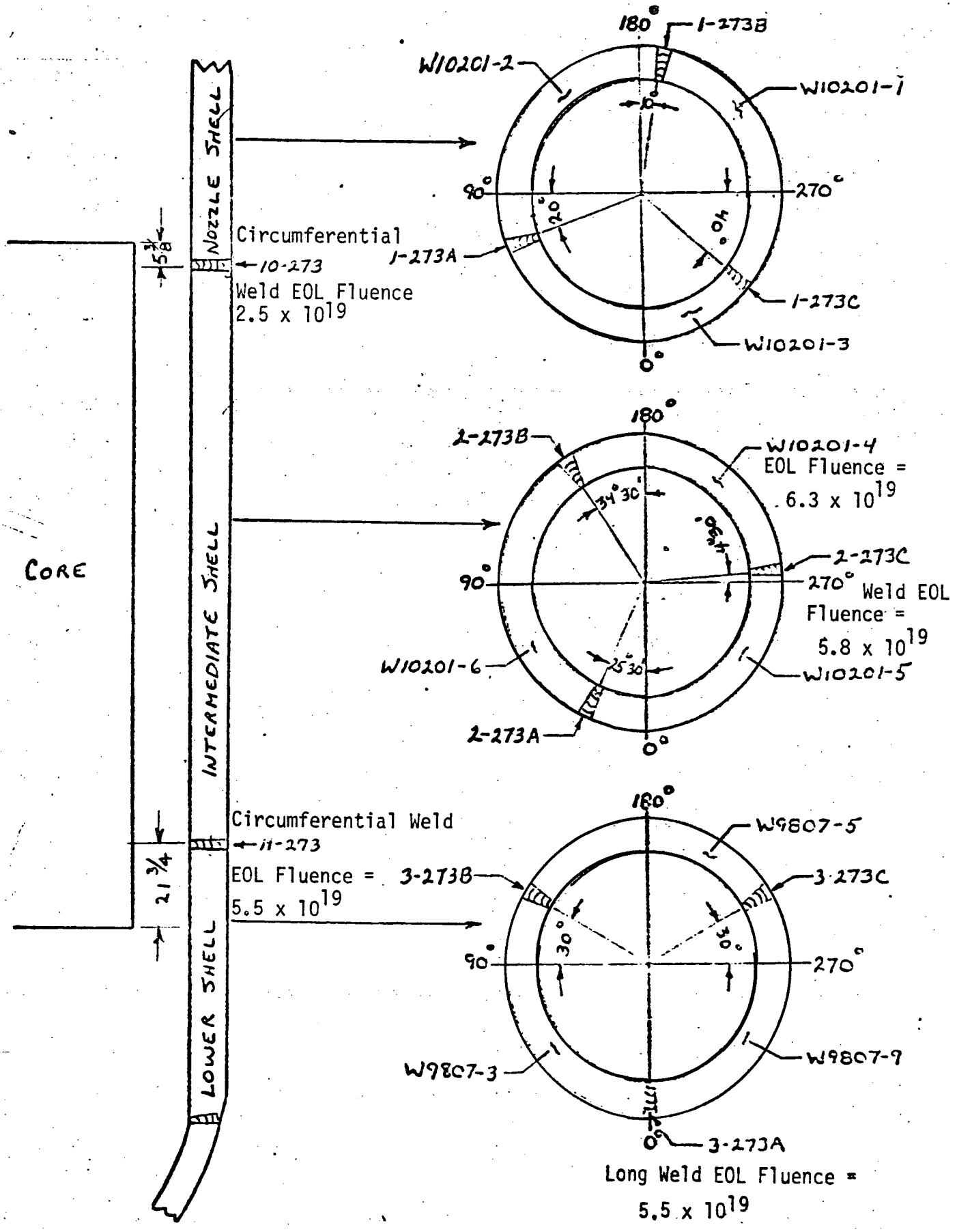

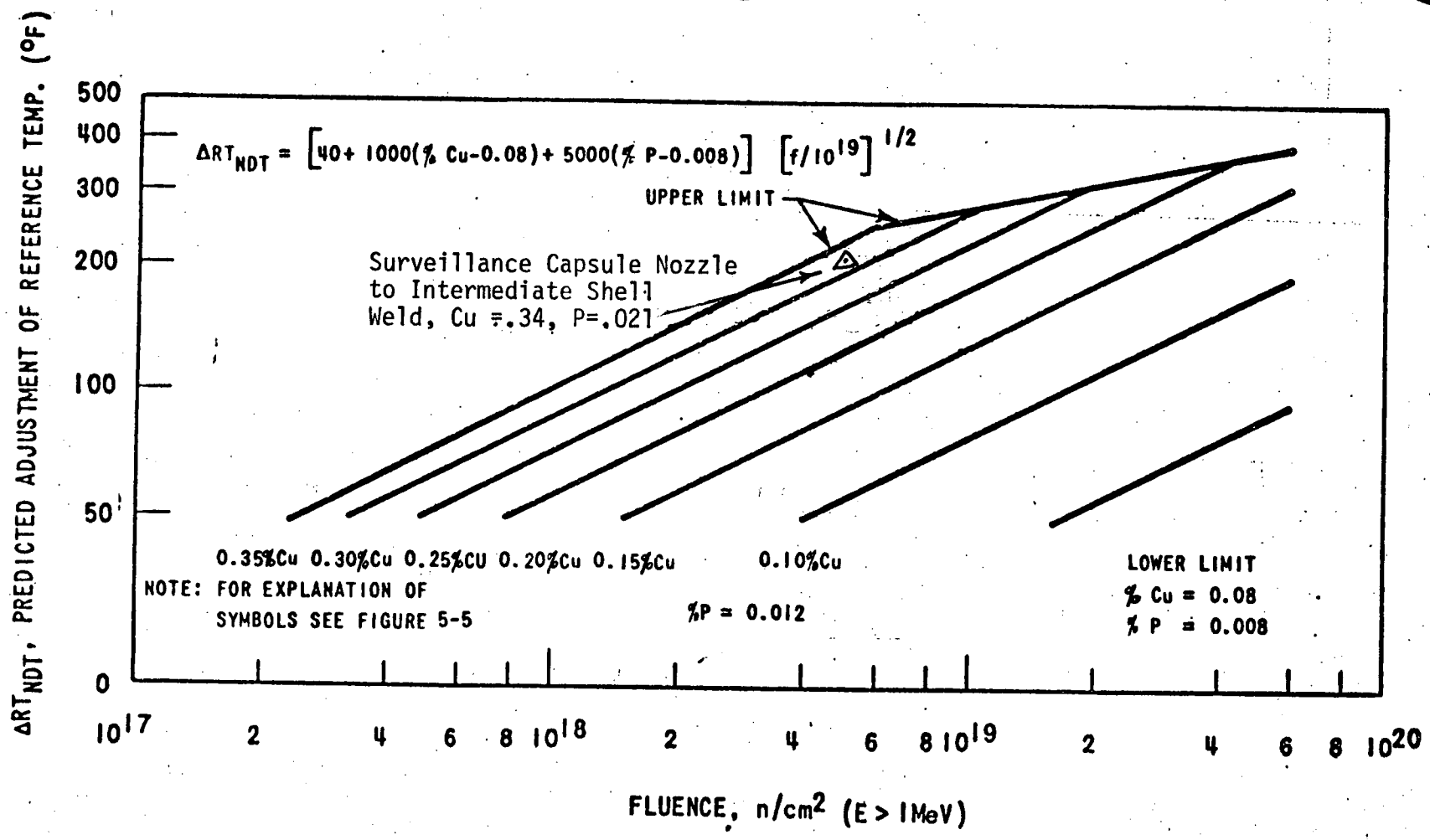

Figure 2-2 - **Regulatory Guide 1.99 Trend Curves: "Predicted Adjustment of Reference Temperature, ΔRT_{NDT} as a Function of Fluence and Copper Content"**

3. BASIS FOR CONTINUED OPERATION

The following information responds to Item 7 of the Enclosure to Reference [1] and Items 1 and 46 Enclosure [2] to Reference [3]:

3.1 Fracture Analyses Performed

The summary report on reactor vessel integrity for Westinghouse operating plants [2] submitted to you in December 1981 includes the analytical results of the most limiting transients with regard to vessel thermal shock consideration for H. B. Robinson Unit 2. Table 3-1 summarizes the minimum number of additional years of vessel operation without violation of acceptance criteria for the transients that were evaluated and provides additional information with respect to fundamental inputs to each analyses.

Detailed integrity assessments have been carried out for the H. B. Robinson Unit 2 reactor vessel, postulating the occurrence of five different types of thermal shock events:

- o Large Loss of Coolant
- o Small Loss of Coolant
- o Large Steam Break
- o Small Steam Break
- o Rancho-Seco Transient

A complete discussion of the transients and the basis for the thermal, stress and fracture analyses completed has been previously provided in reference [2], so it will not be repeated here. Included in Table 3-1 are two new analyses, for the Small Steam Break and Rancho Seco transients, using plant specific property information which are more recent than those done in Reference 2. These results are considered to be more appropriate to the H. B. Robinson vessel, and therefore should replace the previously obtained results.

The results obtained on all five of the transients showed that vessel integrity would be maintained throughout the design lifetime of the plant. To reach this conclusion the fracture analyses were evaluated against the acceptability criteria described below.

3.2 Acceptability Criteria

The results of the fracture mechanics analysis of postulated longitudinal and circumferential flaws are presented in terms of the maximum number of calendar years the reactor vessel will conform to the following criteria:

1. Minimum critical flaw depth for crack initiation is greater than 1.0 inch, or
2. Crack arrest occurs within 75 percent of the vessel wall thickness.

The initiation criterion is based on the ultrasonic inspection limitations, and the arrest criterion is set to be consistent wth Appendix A of Section XI, ASME Code.

It should be noted that the acceptable vessel lifetimes given in the report are based on this acceptance criteria, and therefore, the defined acceptable lifetime does not indicate catastrophic failure of the vessel.

3.3 Warm Prestressing

The results obtained for the H. B. Robinson Unit 2 vessel made use of the principal of warm prestressing to demonstrate integrity for the remaining design lifetime for the limiting transients presented.

The technical basis for the use of warm prestressing in demonstrating vessel integrity has been given in detail in Reference [2]. The application of warm prestressing to the transients results in an excellent behavior with regard to vessel integrity, because warm prestressing occurs very early in each transient.

The specific results for the two inch, no mixing, small LOCA, the most limiting transient, are provided in Figure 3-1 for the longitudinal low nickel weld.

The curves for the longitudinal low nickel weld are show since it is subjected to the highest stresses. As can be seen from the figure, the crack will arrest at 1024 seconds into the transient based on the warm-prestressing effects as discussed in Reference [2].

3.4 Benefit of Low Leakage Core

Reference [2] gives the benefit obtained by installation of a low leakage core. The H. B. Robinson Unit 2 reactor vessel will have a low leakage core installed in 1982. The expected benefit is to reduce the core leakeage flux and thus reduce the radiation damage to the reactor vessel. For this particular cycle the low leakage core also provides desireable characteristics from neutron physics and economic viewpoints. Future cores will be evaluated based on the same characteristics.

3.5 Summary

Detailed analyses have been carried out for bounding postulated transients which result in thermal shock to the reactor pressure vessel. The result of these analyses are summarized in Table 3.1 and show that the H. B. Robinson 2 plant can continue operation through end-of-life before the reactor vessel integrity acceptance criteria could be violated.

TAB[illegible]-1

H. B. ROBINSON 2 MINIMUM NUMBER OF ADDITIONAL YEARS OF VESSEL OPERATION WITHOUT VIOLATION OF ACCEPTANCE CRITERIA FOR THERMAL SHOCK TRANSIENTS

Transient	Minimum Number of Add'l Years*	Remarks						
		Vessel Geometry	Weld Location	Material Properties	Transient Characteristic	Fluence Profile	Trend Curve	Benefit of Warm-Prestress
Large LOCA	> 31	Plant Specific	Plant Specific	Plant Specific as given in Table	Plant Specific	Plant Specific	R.G. 1.99 Low Ni**	YES
Small LOCA	> 31	"	"	"	Limiting Generic 3 Loop 2" Break - No Mixing Case	"	"	YES
Large Steam Break	> 31	"	"	Plant Specific	Plant Specific	"	"	YES
Small Steam Break	> 31	"	"	Plant Specific	Generic	"	"	YES
Rancho-Seco Transient	> 31	"	"	Plant Specific	"	"	"	YES

*Accumulated EFPY as of 10/31/81 is 7.09 years. The values shown reflect the number of years before conservative acceptance criteria [2] are exceeded (does not indicate actual vessel failure) with the use of a 0.8 plant usage factor (capacity factor).

**Benefit of low nickel for longitudinal welds only.

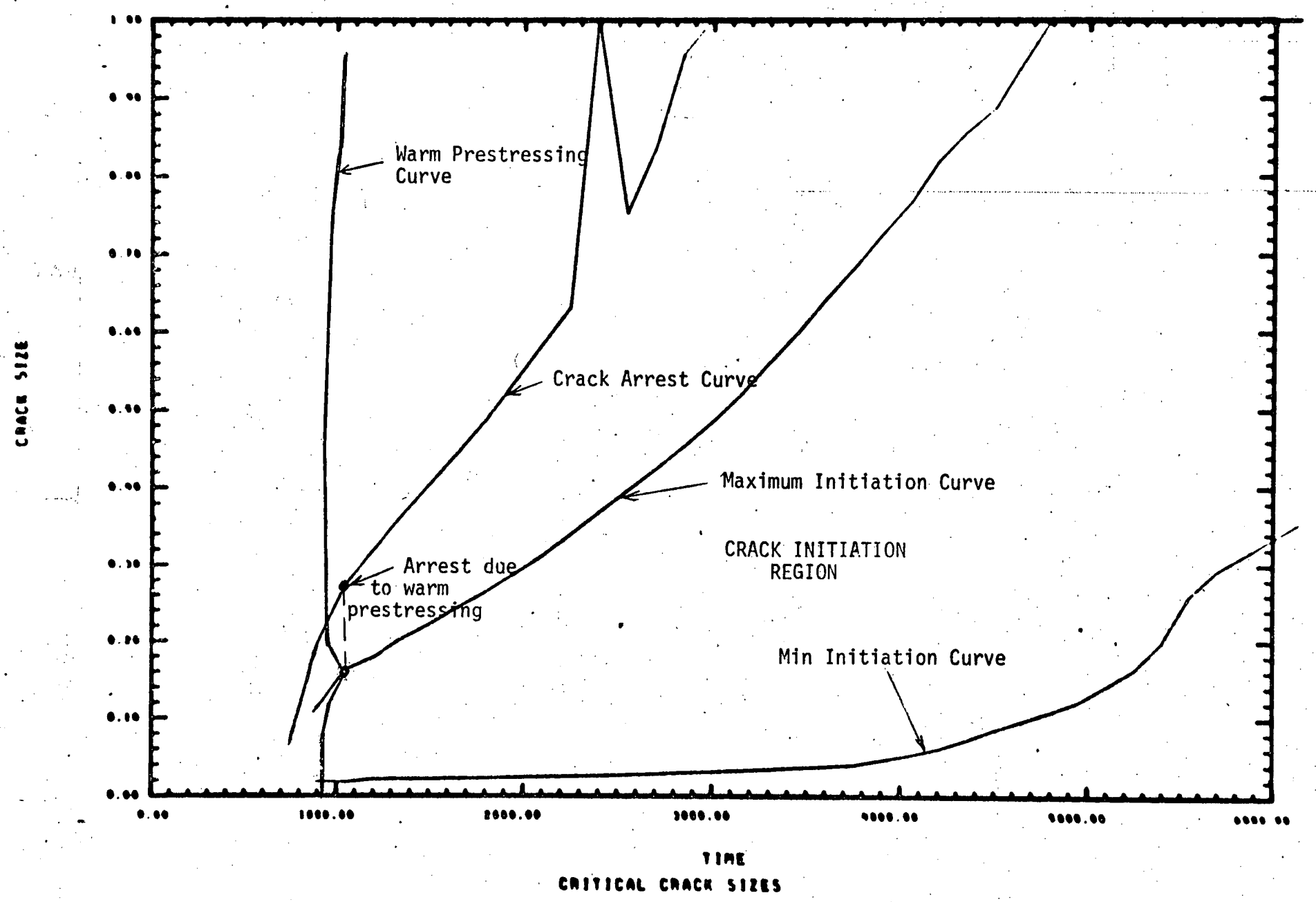

Figure 3.1 Effect of Warm Prestressing

4. OPERATOR ACTIONS

This section addresses item 5 in Enclosure [1] to Reference [3] and item (4)b in Enclosure (2) Figure [3].

4.1 Probability of Transient Occurrence

The transient events which have been postulated for evaluation in this report range from small breaks to the instantaneous complete severance of a primary or steam pipe. The large breaks are very unlikely to occur, and have been assigned probabilities in the well-known Rasmussen report [8]. The smaller breaks which have been analyzed herein will be discussed separately.

The small loss of coolant accident transient analyzed results from a sequence of events which can be assigned a probability of 2×10^{-2} per vessel per year of operation.

The small steam break transient chosen for analysis is actually one of three scenarios which could occur, and represents the most severe transient of the three, that of a stuck-open safety valve. The probability of this occurring is about 10^{-3} per vessel year. The other two scenarios, either a struck open steam (condenser) dump valve or stuck open secondary power operated relief valve, are somewhat more probable, but result in less severe transients.

The Rancho-Seco transient was caused by a control system failure that resulted in an excessive feedwater addition transient in the primary system. This transient produced a significant reactor vessel thermal shock; however, a similar excessive feedwater addition event in a Westinghouse PWR would not produce a primary system transient of significance to reactor vessel integrity. This is due to the fact that the Westinghouse PWR has a large secondary system thermal inertia which would minimize the primary system cooldown rate. The primary system pressure and temperature transient that occurred in Rancho-Seco would be similar to the primary system transient that could occur in a Westinghouse PWR due to a low probability small steam break.

4.2 Operating Procedures

In Reference [3], the NRC requested clarification of Carolina Power & Light Company's October 20, 1981 response on operator actions was requested. Concern was also expressed that appropriate emphasis was not being put on operator actions and training with respect to pressurized thermal shock (PTS) events. Carolina Power & Light Company management is very concerned about the reactor pressure vessel thermal shock issue, as described in recent discussions with Commissioner V. Gilinsky during his visit to H. B. Robinson, and has committed signficant resources to the solution of this issue. However, our philosophy from an operator action point of view apparently was not adequately conveyed in our October letter.

Carolina Power & Light Company believes that the procedures governing operator action and programs governing operator training should provide a balanced approach to handling transients and accidents. A PTS event at H. B. Robinson would most probably be the result of a LOCA or steam line break (SLB) event. Therefore, CP&L addresses PTS events in terms of an initiating LOCA or SLB. Guidance is provided to the operators in the LOCA and SLB procedures

(Emergency Instruction EI-I and Abnormal Procedure AP-25) which reduces the likelihood of various undesirable system conditions such as PTS. This guidance for PTS prevention was described in October 20, 1981 letter. This guidance is consistent with the criteria contained in the Westinghouse Owner's Group Procedure Guidelines which have been received by the NRC.

The PTS event is not a new operational concern. Heatup and cooldown curves which define acceptable operation to prevent PTS events have been in the H. B. Robinson Plant Operating Manual since plant startup. Procedure and training on how to use the heatup and cooldown curves have been in effect since initial startup. In addition, CP&L's operators receive training in the areas of metallurgy (nil-ductility temperature transitions, neutron embrittlement) and thermal hydraulics (repressurization, mixing of hot and cold fluids). Carolina Power & Light Company, however, is committed to assuring that each operator at H. B. Robinson has a complete understanding of the PTS issue and therefore is preparing a training session on the overall PTS issue, including recent information from Westinghouse Owners' Group activities and plant specific analyses. This training will be complete by March 31, 1982. Additionally, CP&L is active in the Westinghouse Owner's Group procedure efforts. As such, CP&L will continue to assure that PTS concerns are taken into account in the preparation of procedure guidelines and their subsequent transformation into plant specific procedures.

As discussed in WCAP 10019, the only transient where "credit" for operator action is taken is the large steam line break. It is assumed that auxiliary feedwater is terminated to the faulted steam generator, and injection flow to the Reactor Coolant System is stopped within ten minutes.

In summary, CP&L would like to reiterate our belief that the safest method of guiding and training operators is to provide a balanced approach to accidents and transients which considers the required operator actions in terms of the overall plant response.

5. IMPACT OF MARGINS

The following information addresses Item (3) in Enclosure (2) to T. Novak's letter of December 18, 1981:

Although a quantified assessment of the sensitivity of fracture analyses recently completed for the H. B. Robinson beltline weld has not been evaluated at this time relative to uncertainties in input values (e.g. initial crack size, copper content, fluence, and initial RT_{NDT}), a detailed discussion of the conservatisms inherent in these analyses is provided in WCAP 10019. Conservatisms due to the generic analytical approach (when applied as given in the remarks of Table 2-4) and margins associated with transient development, fluence calculations, and stress and fracture mechanics analyses are outlined in the subject WCAP.

6. REMEDIAL ACTIONS

The following information addresses the consideration of remedial actions requested in D. G. Eisenhut's letter of August 21, 1981 and Item (2) in Enclosure (2) to T. Novak's letter of December 18, 1981:

WCAP 10019 provides a qualitative assessment of the feasibility and/or usefulness of the following remedial action that could be used to resolve vessel integrity concerns, including a reduction in rate of further vessel embrittlement:

(1) Increasing the ECC water temperature via heating of the refueling water storage tank

(2) Limiting auxiliary feedwater flow

(3) Design of control systems to mitigate challenges to reactor vessel integrity

(4) Core modifications to reduce further neutron radiation damage at the beltline

(5) Recovery of material toughness by in-place annealing of the reactor vessel

As discussed previously, the analysis performed shows that the assumed acceptance criteria are not violated for the normal vessel lifetime. Although of low probability, Carolina Power & Light Company recognizes the serious reliability consequences that might result if a PTS event should ever occur and is therefore examining additional actions which might be taken. The following actions are being taken by CP&L with regard to reactor vessel integrity:

(1) A low leakage core loading pattern is being installed at Robinson during the next refueling. Cores for future cycles will be evaluated to ascertain to what extent it is desirable to maintain low leakage characteristics.

(2) Carolina Power & Light Company and EPRI are participating in a joint project to develop an independent analysis of H. B. Robinson with respect to pressurized thermal shock. This analysis will be plant specific rather than generic and should provide independent verification of the results previously reported.

(3) Carolina Power & Light Company is conducting an engineering study on the feasibility of heating the Refueling Water Storage Tank and plant specific benefits which can be derived from this type of modification. At this point, it is not apparent that a significant benefit can be gained at H. B. Robinson, but these results are preliminary.

(4) Carolina Power & Light Company is examining methods for potentially obtaining more definitive analysis of the chemical composition of the vessel longitudinal welds. Literature searches are continuing. Additionally, methods of physically analyzing the welds are being considered.

(5) Carolina Power & Light Company will review the recently completed study of vessel annealing conducted by EPRI for applicability to H. B. Robinson. This procedure does not presently appear warranted at H. B. Robinson, but CP&L will continue to remain abreast of the latest results of industry analysis.

As mentioned above, pressurized thermal shock is not a safety issue for H. B. Robinson based on the analysis performed to date. It is desirable, however, from an economic point of view to take steps to attempt to satisfy acceptance criteria based on no crack initiation. These economic incentives, plus the desire by CP&L to gain an even more conservative safety margin, are the reasons that CP&L is pursuing the above steps.

7. REFERENCES

[1] U. S. Nuclear Regulatory Commission letter entitled, "Pressurized Thermal Shock to Reactor Pressure Vessels", dated August 21, 1981.

[2] Meyer, T. A., "Summary Report on Reactor Vessel Integrity for Westinghouse Operating Plants", WCAP-10019, December 1981.

[3] U. S. Nuclear Regulatory Commission letter to Carolina Power & Light Company, December 18, 1981.

[4] Southwest Research Institute Project 02-4397 "H. B. Robinson Unit No. 2 Reactor Vessel Material Surveillance Program".

[5] SRI Letter to CP&L Co. dated April 4, 1977, E. B. Norris to Talmadge Clements.

[6] C. E. Power Systems letter to Carolina Power & Light Company, December 17, 1981.

[7] Carolina Power & Light Company letter entitled, "Pressurized Thermal Shock to Reactor Pressure Vessels", dated Octoer 21, 1981.

[8] Reactor Safety Study, An Assessment of Accident Risks in U. S. Commercial Nuclear Power Plants, Report WASH - 1400 U. S. Atomic Energy Commission, August 1974.

NRC-HBR

Box NCR_HBR_1994_0009

Accession 8203190254

U.S. NUCLEAR REGULATORY COMMISSION
DOCKET NO. 50-261
LICENSE NO. DPR-23

SAFE-SHUTDOWN CAPABILITY ASSESSMENT AND PROPOSED MODIFICATIONS

10 CFR 50, APPENDIX R, SECTION III G

H. B. ROBINSON UNIT NO. 2

CAROLINA POWER & LIGHT COMPANY

March 1982

CONTENTS

1.0 INTRODUCTION

This document provides information describing the safe-shutdown capabilities for H. B. Robinson Unit No. 2 (HBR 2). The capabilities include the existing hot-standby operating features (installed under previous plant modifications), the planned upgrade of hot-standby features, and the planned implementation of cold-shutdown features. Sections 2.0 through 8.0 describe these features, provide assurance of the adequacy of the features, describe the process by which they were identified, and define the plant modifications planned to achieve compliance with 10 CFR 50, Appendix R, Section III G.

Section 2.0 describes, in a procedural format, the course of action that was followed in evaluating the plant safe-shutdown capabilities in light of 10 CFR 50, Appendix R. Through this process, areas of compliance with Appendix R were defined, areas requiring modification were identified, and conceptual designs were developed.

Section 3.0 describes the rationale for selecting the alternative/dedicated shutdown approach (i.e., electing to comply with Appendix R, Section III G(3)) for HBR 2.

Section 4.0 describes the process employed in identifying, analyzing, and (if required) resolving "associated circuit" problems as addressed by Appendix R.

Section 5.0 is a summary table which denotes, by plant fire zone, the scheduled modifications planned for implementation to establish compliance with Section III G(3) of Appendix R. Exemptions noted are provided in a separate document.

Section 6.0 provides a listing of the modifications identified in Section 5.0, with a synopsis of the plant hardware impact of each modification.

Section 7.0 contains NUS drawing number 8726-M-4000, which provides the location of all fire zones in the reactor and auxiliary buildings. (Not shown on this drawing is the service water pump area intake structure, which is physically remote from the reactor and auxiliary buildings).

Section 8.0 contains the responses to questions comprising the NRC Request For Information dated February 20, 1981. The responses, which are keyed to the original

questions, are identified as Enclosure 1, Questions 8(a) through (l), and Enclosure 2, Questions 1 and 2.

2.0 METHODOLOGY—10CFR50, APPENDIX R SECTION III G

2.1 Scope

This section reflects the procedures used to review the fire protection of the safe shutdown capability provided to meet the requirements of Appendix R to 10CFR50.

The following efforts were identified as required:

1. Identify shutdown systems required to achieve cold shutdown.

2. Identify associated circuit interface areas (both electrical and physical proximity). Review spurious operation of the RCS high-low pressure boundary valves.

3. Identify conceptual designs to provide equipment and wiring capability for the dedicated or normal shutdown systems considering a fire in any zone.

2.2 Review of Systems Required to Achieve Hot Standby and Cold Shutdown

2.2.1 FSAR and P&IDs were reviewed to identify the systems required to achieve hot standby and cold shutdown conditions.

2.2.2 Cable routing paths by fire zone were identified for the normal shutdown equipment and for the dedicated hot standby equipment as installed. Plant cable drawings, hot standby cable installation drawings, plant staff information, and field trips to the plant were used as information sources.

2.2.3 The instrumentation required for shutdown of the plant to cold shutdown status was identified by reviewing plant operating procedures and system descriptions.

2.2.4 Power availability, for each item of shutdown equipment, was identified by reviewing the normal and alternative power sources.

2.2.5 A review by plant fire zone for the possible effects of a loss of each fire zone was accomplished. The review determined which equipment and/or power source would be unavailable and identified what alternate equipment was available to provide the required function.

2.2.6 An interim report was issued to summarize the findings of this portion of the study. A listing of the systems and equipment which were deemed as necessary to provide the functions required for cold shutdown was provided. The cable routing for each equipment item identified as part of the dedicated/alternative system was shown. The location of each equipment item was presented and the equipment alternates were listed considering a fire in each plant fire zone. A summarized listing of the problem areas to achieving cold shutdown was provided. This report was controlled as described by the procedures referenced in Section 2.6 and delivered to CP&L engineering and plant staffs for review and comment.

2.3 Associated Circuit Interface Review

2.3.1 A review of the possible inadvertent operation of equipment on a system-by-system basis was conducted. The possible effects of associated circuits on achieving the safe shutdown of the plant was identified. Plant wiring information by fire zone was utilized in conjunction with control wiring diagrams and switchgear and motor control center connection diagrams to expose possible effects of a fire in any single fire zone.

2.3.2 The results of spurious operation for each component were reviewed to determine if a resultant LOCA was possible.

2.3.3 If two or more redundant components were identified which could provide protection from a possible LOCA event, the cable routing for the components, both power and control, was then reviewed to determine if wiring for redundant components was routed through common fire zones.

2.3.4 For hot standby, the possible effects of associated circuit failures (worst case effects always presumed) were identified.

2.3.5 An interim report was issued to summarize the findings of this portion of the study. A tabular listing of associated circuits for each safe shutdown component was provided along with the power supply and control power, wiring by fire zone, and the isolation of available circuits and fire zones common to normal safe shutdown and alternative equipment. Also included were modifications identified to preclude the effects of associated circuit failures and fault isolation requirements on a component-by-component basis. The report was controlled as described by the procedures identified in Section 2.6 and delivered to CP&L engineering and plant staffs for review and comment.

2.4 Effects of Transient Combustibles

2.4.1 A plant site visit with a fire protection consultant was conducted and an inspection of each plant fire zone containing safe shutdown equipment was conducted. This visit resulted in comments regarding possible effects from transient combustibles at various points through the plant.

2.4.2 Particular plant areas required for cold shutdown such as the RHR pit and pipe alley areas were reviewed for possible fire effects. Combustible surveys and fire effects previously provided by the Fire Protection Program Review APCSB 9.5-1, H. B. Robinson Unit No. 2, CP&L, January 1, 1977, were utilized to determine fire hazards.

2.5 Conceptual Designs for Dedicated/Alternative Shutdown Systems

2.5.1 The results tabulated by the previous interim reports plus comments received as a result of the review of these reports were summarized.

2.5.2 Based upon the previous interim reports and fire hazard analysis, a dedicated/alternative shutdown system was conceptually designed. The functions required, the equipment to provide the functions, and the instruments to monitor the functions were identified. Control panel locations,

power supply locations, and cable routings independent of the normal system equipment and cables were identified.

2.5.3 A report was issued which documented, by block diagram, the equipment controls, power sources, switching networks, and possible cable routings. A shutdown scheme based upon the utilization of the previous hot standby safe shutdown equipment was expanded to include cold shutdown capability. This report was controlled as described by the procedures referenced in Section 2.6 and delivered to CP&L engineering and plant staffs for review and comment.

2.5.4 Comments from the review of this report on conceptual designs were considered and an additional summary was prepared for the possible effects on safe shutdown for the case where safety-related systems remained energized and under operator control.

2.6 Quality Assurance and Control

A quality assurance plan was issued to ensure the correctness and completeness of the documentation utilized in this review study.

3.0 RATIONALE FOR PROVIDING AN ALTERNATIVE/DEDICATED SHUTDOWN CAPABILITY (10CFR50, APPENDIX R, SECTION III G(3))

The separation criteria applied in developing the original HBR plant design were not consistent with the separation requirements of 10CFR50, Appendix R. Consequently, an evaluation was required to determine whether to extensively reroute existing circuits to establish adequate separation or to provide an alternative/dedicated shutdown capability.

It was determined that both shutdown-related equipment trains (cables) were in close proximity at many points throughout the plant, making it impractical to fully establish train separation in accordance with 10CFR50, Appendix R, Section III G(1) or III G(2). The obstacles encountered were:

- Inability to establish 20-ft. separation in most plant areas.

- Impracticality of installing three-hour-rated fire barriers in most areas (potentially severe impact on operations, maintenance, or HVAC functions).

- Impracticality of installing fixed fire suppression systems in many plant areas (congested equipment areas and/or potential equipment damage as a result of system actuation).

- Particular plant physical impact of separating circuits and power feeds associated with the plant emergency diesel generators. In order to separate the diesel equipment trains and provide for continuous availability of shutdown power (assuming loss of offsite power), extensive rerouting of 480V bus duct and conduits would be required.

- Particular problem areas included the control room, cable spreading room/relay room, battery room, and emergency switchgear room. Virtually all existing shutdown-related control and instrumentation circuits interfaced with one or more of these areas, and the highly congested equipment and raceway installations made it infeasible to establish adequate train separation within the areas. Because many of these circuits are safety related and all of these circuits were required to interface with the control room,

it was not feasible to provide alternative routing outside of the existing fire areas.

- These considerations dictated that an alternative control location, using a dedicated control panel, be provided to allow for shutdown operation in the event of a fire in any of the above areas.

- The possibility of loss of off-site power concurrent with a fire in one of several selected fire areas necessitated the installation of a dedicated DS power generation and distribution system.

In summation, the safe-shutdown capability provided at HBR represents a combination of alternative and dedicated shutdown concepts as defined by 10CFR50, Appendix R. As a result, new modifications will be designed to meet the requirements of Section III G(3) of 10CFR50, Appendix R, with a limited number to meet Section III G(1) and III G(2).

4.0 ASSOCIATED CIRCUIT REVIEW

The problem of associated circuits within this plant, which has limited physical separation of existing safety related components, is resolved by effectively creating a separate shutdown train. The separate shutdown equipment is powered from an independent power source. Control is provided by a dedicated control station which is remote from the normal control location. Cabling of the interconnect wiring is accomplished by utilizing alternate cable routing paths and isolating devices for electrical isolation from normal systems power and control circuits. All alternative/dedicated shutdown related circuits are routed in separate conduit containing only alternative/dedicated shutdown cables. Where common cable routing is encountered, fire barrier protection and fire suppression is provided. The reference material provided in the response to Question 1-D, of Enclosure 2 of the February 20, 1981 NRC request for information identifies the equipment and wiring in fire zones where associated circuits are encountered.

A tabulation of these common areas and the proposed protection is provided here for clarification.

FIRE ZONE	COMMON CIRCUITRY	PROTECTION PROVIDED
4	Charging pumps B&C wiring to E1&E2 buses	Coordinated circuit breaker protection isolates buses when required. Alternative pumps (S.I.) provide charging capability after reduction of RC system pressure.
5	Circuits to E1, E2, and the dedicated shutdown (DS) bus	The low volume of fixed combustibles present in this area plus the distance between the safety related circuits and the alternative shutdown circuits provide protection. A fire barrier between component cooling pumps has been provided and all alternative/dedicated shutdown cables are routed in separate conduit. See exemption request.

FIRE ZONE	COMMON CIRCUITRY	PROTECTION PROVIDED
12	Control circuits for dedicated shutdown system and power circuits for normal system	Dedicated circuits will be routed in conduit and provided with one-hour-rated fire barrier and automatic fire suppression (water spray) system.
13	Power and control circuits for both normal and dedicated shutdown systems	A fire in this zone could involve dedicated shutdown system power and control circuits and power circuits associated with E1 and E2. Breaker coordination will provide protection for E1 and E2 buses, thus allowing normal shutdown system operation. S.I. pumps provide charging capability.
24	Control and power circuits for both normal and dedicated shutdown systems	One-hour-rated fire barriers and automatic fire suppression provided.
28	Control and power circuits for both normal and dedicated shutdown systems	Fire barrier provided for alternative/dedicated circuits; due to low volume of combustible present automatic fire suppression is not required. See exemption request.

5.0 SUMMARY TABLE OF MEANS OF ESTABLISHING COMPLIANCE WITH 10CFR50, APPENDIX R, SECTION III G

The plant safe-shutdown capabilities were assessed for each fire zone; a fire was postulated in each zone, and the ability to achieve (cold) shutdown using the remaining plant equipment (unaffected by fire in that zone) was evaluated.

The results of this assessment are summarized on the attached table, which provides the following information for each fire zone:

- Whether the existing safe-shutdown features comply with Appendix R, Section III G (1, 2, or 3).

- If compliance has not yet been established, but will be achieved under the provisions of III G (1) or III G (2), the projected implementation date is given.

- If compliance has not yet been established, but will be achieved under the provisions of III G (3), the required modifications are identified (modification numbers are keyed to the listing of modifications in Section 6.0), and the projected implementation date is given.

- Areas in which exemptions from the requirements of Appendix R are justified are noted (see Exemption Requests) and areas having no safe-shutdown impact or required modifications are identified.

COMPLIANCE WITH APPENDIX R CRITERIA

Zones	Complies with III G	III G.1 or G.2 Mod. Req.	Date	III G.3 Mod. Req.*	Date	Exemption Requested
1	Yes	-	-	-	-	-
2	Yes	-	-	-	-	-
3	Yes	-	-	-	-	-
4	Yes	-	-	-	-	-
5	No	Yes	Note 1	16	Note 2	Yes
6	NA	-	-	-	-	-
7	NA	-	-	-	-	-
8	NA	-	-	-	-	-
9	No	No	-	7,9,10,13 15,18	Note 2	-
10	No	No	-	9,16,18	Note 2	-
11	No	No	-	2,3,6	Note 2	-
12	No	Yes	Note 1	2,3,5,19,20	Note 2	-
13	No	No	-	2,21	Note 2	-
14	NA	-	-	-	-	-
15	NA	-	-	-	-	-
16	No	No	-	1,3,4,7,8 18,22	Note 2	-
17	NA	-	-	-	-	-
18	NA	-	-	-	-	-
19	No	No	-	1-22	Note 2	-
20	No	No	-	1-22	Note 2	-
21	No	No	-	2	Note 2	-
22	No	No	-	1,3-20,22	Note 2	-
23	No	No	-	2,9,10,17,22	Note 2	-
24	No	No	-	7,9,10,12, 13,15,17,18	Note 2	-
25	No	No	-	13	Note 2	-
26	NA	-	-	-	-	-
27	No	Yes	Note 2	1	Note 2	Yes
28	No	Yes	Note 1	13,15-18	Note 2	Yes
SWP	No	Yes	12/1/82	No	-	Yes

LEGEND: Nos. 1-22 indicate the number of the modification descriptions (see Section 6.0)

NA - Not applicable (No safe shutdown equipment in the fire zone)

SWP - Service Water Pump Area

NOTES: 1 Planned for implementation during 1983 refueling outage.

2 Planned for implementation during 1984 refueling outage.

*Modifications identified require NRC approval.

6.0 MODIFICATIONS PLANNED TO ESTABLISH COMPLIANCE WITH 10CFR50, APPENDIX R, SECTION III.G(3)

In order to establish compliance with 10CFR50, Appendix R, under the provisions of Section III.G(3), the following modifications are planned:

1. Provide an additional switchgear section to expand the existing DS bus. Breakers for station air compressor, pressurizer heaters (control group) and RHR pump are required.

2. Abandon the existing power connections to the primary air compressor and the pressurizer heater control group; reconnect these loads to the expanded 480V DS bus. Pressurizer heater routing to be relocated to south cable vault. Provide alternate control at the charging pump room shutdown panel for the pressurizer heaters.

3. Install a dedicated 480V motor control center (MCC-DS) in the 4-KV switchgear room to support safe shutdown motor loads.

4. Provide the capability for the transfer of control and power circuits serving valves V1-8A, V2-14A, and V6-12D from MCC-6 to MCC-DS. Controls for these valves will remain on the existing turbine deck and charging pump room shutdown panels. Requires the addition of a transfer switch panel in fire zone 13.

5. Provide the capability for the transfer of the steam-driven auxiliary feedwater pump oil bearing pump from MCC-6 to MCC-DS. Provide alternate control from the charging pump room shutdown panel. Requires the addition of a transfer switch panel in fire zone 5.

6. Provide the capability for the transfer of the auxiliary building cooling unit fan from MCC-5 to MCC-DS.

7. Provide the capability for the transfer of isolation valves 535 and 536 from MCC-6 to MCC-DS at a transfer switch panel added in fire zone 5. Provide alternate control at the charging pump room shutdown panel.

Monitor valve position at the charging pump room shutdown panel for PCV 456 and 455C using independent power and cabling.

8. Replace the existing charging pump room panel with a new set of panels to accommodate additional controls and instrumentation.

9. Install dedicated temperature instrumentation for letdown relief line temperature with indication at the charging pump room shutdown panel (alternative to TE 141).

10. Provide dedicated level instrumentation for the pressurizer relief tank with indication at the charging pump room shutdown panel. Cable will be routed through the south cable vault.

11. Disable power and control (during normal plant operation) to valves 860A and B to prevent inadvertent operation. Provide valve position monitoring circuits, with indication in the control room.

12. Disable power and control (during normal plant operation) to valve 750. Provide a valve position monitoring circuit with indication in the control room.

13. Provide disconnect means for solenoid valves associated with reactor head vent and pressurizer vent lines.

14. Install dedicated level instrumentation for the volume control tank, with indication at the charging pump room shutdown panel.

15. Provide alternate control from the charging pump room shutdown panel for cold shutdown equipment normally operated from the control room (valves 200A, 460A, and 311).

16. Provide alternate control from the turbine deck shutdown panel for cold shutdown equipment normally operated from the control room (valves V1-8B, V1-8C, V2-14B, and V2-14C). Requires the addition of a transfer switch panel in fire zone 13.

17. Install dedicated instrumentation with indication at the charging pump room shutdown panel to provide cold shutdown information for RCS temperature (hot and cold leg), volume control tank level, RHR flow, and in-core temperature (utilizing existing in-core sensors).

18. Modify letdown system valves 460B, 204A, and 204B to enable manual control for air-operated valves; install manual air pilot valves to permit letdown valve control without solenoid actuation.

19. Modify the turbine deck shutdown panel to provide controls and indication for Loop B and C auxiliary feedwater turbine steam inlet valves and feedwater outlet valves. Install remaining RCS Loop B and C temperature monitors.

20. Provide the capability for the transfer of control and power circuits serving boric acid pump A, boric acid tank heater A, and associated heat tracing from MCC-5 to MCC-DS. Provide alternate controls at the charging pump room shutdown panel.

21. Perform an analysis of the MCC-6 control circuits routed through fire zone 13; verify that each circuit is protected by an effective isolation device (e.g., fuse) to prevent potential fire-induced damage to MCC-6 control circuits.

22. Install a dedicated 125V DC power supply (fed from the DS 480V distribution panel) for use with alternative/dedicated shutdown DC loads.

7.0 H. B. ROBINSON UNIT NO. 2 FIRE ZONES - REACTOR AND AUXILIARY BUILDINGS (NUS DRAWING NO. 8726-M-4000)

The drawing presented in this section provides a plan of the plant and identifies each fire zone for the plant.

8726-M-4000 A

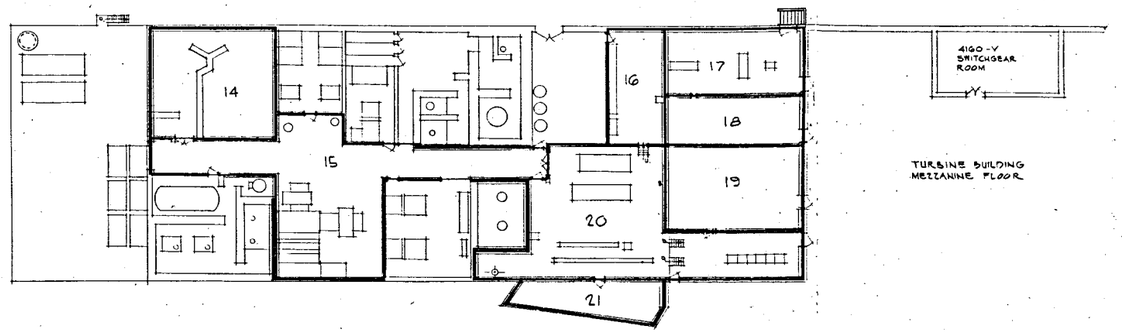

AUXILIARY BUILDING FLOOR EL. 242'-0" & 246'-0"

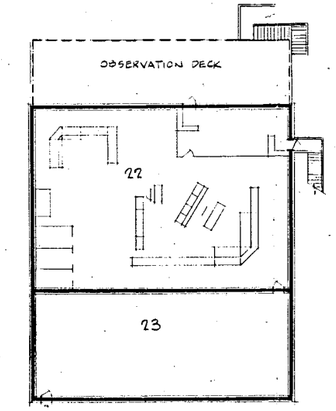

CONTROL ROOM FLOOR EL. 254'-0"

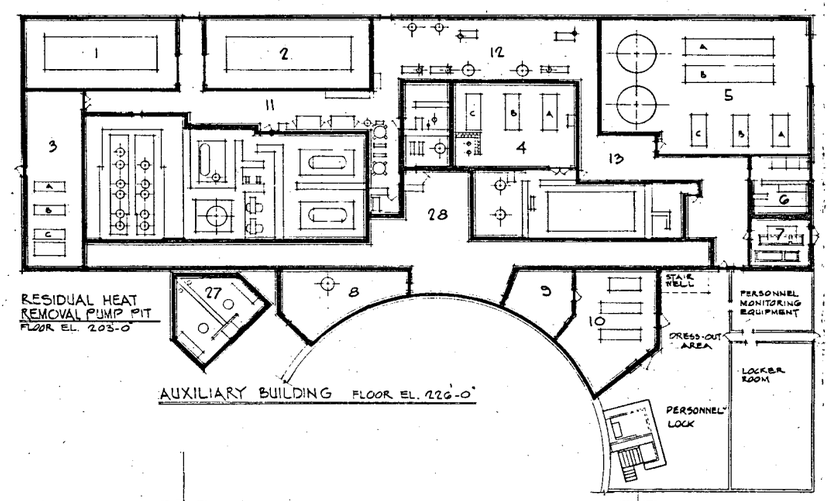

RESIDUAL HEAT REMOVAL PUMP PIT
FLOOR EL. 203'-0"

AUXILIARY BUILDING FLOOR EL. 226'-0"

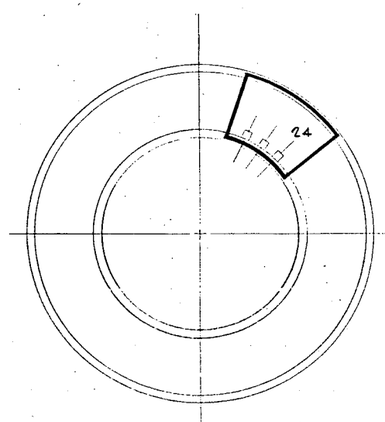

REACTOR BLDG. FLOOR EL. 228'-0"
ELECTRICAL PENETRATION AREA

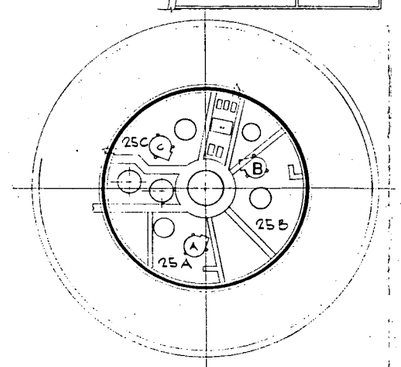

REACTOR BLDG. FLOOR EL. 251'-6"
REACTOR COOLANT PUMP BAYS

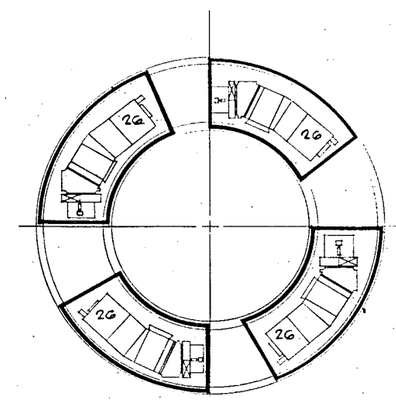

REACTOR BLDG. FLOOR EL. 275'-0"
HVAC/FILTER UNITS

LEGEND:

ZONE	DESCRIPTION
1	DIESEL GENERATOR ROOM B
2	DIESEL GENERATOR ROOM A
3	SAFETY INJECTION PUMP ROOM
4	CHARGING PUMP ROOM
5	COMPONENT COOLING PUMP ROOM
6	HOT LAB/COUNTING ROOM
7	AUXILIARY FEEDWATER PUMP ROOM
8	BORON INJECTION TANK ROOM
9	NORTH CABLE VAULT
10	SOUTH CABLE VAULT
11	HALLWAY-DIESEL GENERATORS/MCC-5
12	HALLWAY - AIR COMPRESSORS
13	HALLWAY - COMPONENT COOLING/CHARGING ROOMS
14	WASTE HANDLING ROOM
15	HALLWAY-HVAC EQUIPMENT
16	BATTERY ROOM
17	HVAC EQUIPMENT ROOM
18	FORMER UNIT-1 CABLE SPREADING ROOM
19	RELAY, COMPUTER, AND UNIT-2 CABLE SPREADING ROOM.
20	EMERGENCY SWITCHGEAR ROOM
21	ROD CONTROL ROOM
22	CONTROL ROOM
23	RELAY (HAGAN) ROOM
24	CONTAINMENT ELECTRICAL PENETRATION AREA
25	REACTOR COOLANT PUMP BAYS (A,B,C)
26	CONTAINMENT HVAC (FILTER) UNITS
27	RESIDUAL HEAT REMOVAL PUMP PIT
28	PIPE ALLEY

REVISIONS

REV.	DESCRIPTION
A	ISSUED FOR CLIENT REVIEW 1/18/82

DRAWING STATUS
ISSUED FOR CLIENT REVIEW

	Date
DRAWN	1/18/82
CHECKED	1/4/82
DES ENGINEER	1/4/82
SUPERVISOR ENGR.	1/4/82
APPROVAL	
APPROVAL	1/18/82
APPROVAL CLIENT	

CAROLINA POWER & LIGHT COMPANY
H.B. ROBINSON STEAM ELECTRIC PLANT

UNIT No. 2 - FIRE ZONES
AUXILIARY & REACTOR BUILDINGS

NUS CORPORATION
ROCKVILLE, MD.

DRAWING NO. 8726-M-4000 REV. A
SCALE NONE SHEET 1 OF 1

8.0 RESPONSES TO QUESTIONS COMPRISING NRC REQUEST FOR INFORMATION DATED FEBRUARY 20, 1981

The following NRC positions and answers to the questions presented for each position are provided here as they reflect the proposed design modifications for the H. B. Robinson Unit 2.

NRC Positions From Enclosure 1 of the Letter

8(a) Provide a description of the systems or portions thereof used to provide the shutdown capability and modifications required to achieve the alternate shutdown capability if required.

RESPONSE

The functional and hardware requirements for achieving a hot-standby condition are tabulated in the H. B. Robinson Unit No. 2 Fire Protection Program Review (APCSB 9.5.1), dated January 1, 1977. The requirements which are directed at achieving and maintaining a cold shutdown condition, are summarized on Table 1.

In the original plant configuration, fires occurring in some areas could impair the use of any or all of this equipment, primarily through destruction of power and control cables. Consequently, provisions have been made for the transfer of power and/or the control of select components to alternative sources to mitigate the consequences of a severe fire in these plant areas (i.e., control room, cable spreading room, emergency switchgear room, or battery room). The hot-standby capability is in basic accordance with Appendix R requirements and this capability is to be modified to include cold shutdown capability.

Figure 1, sheets 1 through 6, presents simplified piping and instrument diagrams of the major functional elements of the alternate shutdown capability; not all features associated with the shutdown capability are shown on the figure. The modification, as described herein, is intended only to ensure the operability of those systems and components needed to achieve a cold shutdown condition. The modification impacts the following existing and plant features.

- Steam-driven feedwater pump and steam supply valves
- Power-operated relief valves
- Component cooling pump A
- Service water pump D and associated valves
- Charging pump A
- Residual heat removal pump A

- Remote shutdown control panels (charging pump room and turbine deck)
- Dedicated 480V switchgear and motor control center
- Dedicated diesel generator
- Dedicated AC and DC power supplies
- Dedicated shutdown instrumentation (primary and secondary systems)
- Instrument air compressor
- Pressurizer heaters (control group)

Simplified schematic diagrams and descriptive summaries are provided for the above features. These diagrams and summaries are based on the reference design drawings listed on Table 2, which are available for review upon request.

Steam-Driven Feedwater Pump Shutoff Valves

A transfer switch panel located in the Auxiliary Building enables the transfer of power and control for the steam-driven feedwater pump (FWP) shutoff valves V1-8A and V2-14A from the existing remote control signals to local control from the turbine deck panel. Simplified control diagrams for valves V1-8A and V2-14A are presented by Figures 2 and 3, respectively. Valves V1-8B, V1-8C, V2-14B, and V2-14C will be modified in an identical manner for cold shutdown operation. The modification does not change the existing control voltage or power source alignment with the valves. The transfer to local control is annunciated in the control room.

Power-Operated Relief Valves

The turbine deck control panel also provides for disabling the existing remote control of steam generator power-operated relief valves RV1-1, RV1-2, and RV1-3; Figure 10 is a simplified diagram of the control transfer. When transferred to local control, the valves can be operated by using the existing valve controllers located on the turbine deck. The transfer to local control is annunciated in the control room.

Component Cooling Pump A

A transfer switch is provided on the charging pump room control panel to disable the existing remote control of component cooling pump (CCP) A and to transfer control of the pump to a local switch on the panel. Figure 4 is a simplified diagram

of the control transfer scheme. The modification does not change the existing control voltage or power source alignment (480V bus DS) with the pump. The transfer to local control is annunciated in the control room.

Service Water Pump D

The normal supply for service water pump (SWP) D is 480V bus E2, with control from the plant control room. To provide a power supply and controls independent of the control, cable spreading, and emergency switchgear rooms, manual circuit breakers 1 and 2 have been installed as shown on Figure 5. When properly aligned, these breakers provide an alternate power supply and control station for SWP D. Alternative control is accomplished from the charging pump room panel. The breakers are provided with a Kirk key interlock, with breaker 1 normally closed, breaker 2 normally open (the status of breaker 2, through an auxiliary contact, is annunciated in the control room). The Kirk key interlock is a single key system, and the respective breaker must be tripped before the key can be removed. Consequently, simultaneous closure of both breakers is impossible. Service water discharge valve V6-12D, which isolates the SWP D from the service water header, will be modified so that it is powered through local circuit breakers with a mechanical interlock as shown on Figure 6. The valve is normally powered from MCC-6 but the Kirk key breaker allows power from the dedicated MCC to be supplied to the local breaker. Thus, power train isolation is maintained and valve operation is available from the auxiliary shutdown power connections.

In the event of a control room, cable spreading room, or emergency switchgear room fire, breaker 1 is tripped and breaker 2 is closed. Service water pump D is then fed by the dedicated power supply and is controlled from the auxiliary panel in the charging pump room. In this configuration, operation of SWP D is independent of the control room, cable spreading room, and emergency switchgear rooms, and is unaffected by any fire in these areas. Similarly, operation of service water discharge valve V6-12D in the "alternative shutdown" mode is unaffected by fires in the control room, cable spreading room, and emergency switchgear room.

Charging Pump A

Alternate controls, independent of the control, cable spreading, and emergency switchgear rooms, have been provided for charging pump A. Since the normal power supply for this pump (480V bus DS) is outside the emergency switchgear room, an alternate power source is not required.

The alternate controls for charging pump A, consisting of a control transfer switch and pushbutton control switches, are located on the charging pump room control panel. As shown on Figure 7, the pushbutton control switches are electrically functional only when the control transfer switch is in the "local" position. With the control transfer switch in the "local" position, operation of charging pump A is not affected by any fire in the control, cable spreading, or emergency switchgear rooms.

Pressurizer Heaters (Control Group)

Alternate controls, independent of the control, cable spreading, and emergency switchgear rooms, will be provided for these heaters. The heaters will be powered from the 480V bus DS, therefore, an alternate power source will not be required.

The alternate controls will be located in the charging pump room and a control transfer switch similar to the charging pump A supplied to provide isolation from normal circuits and annunciate remote control to the control room.

Emergency DC Power Supply/Dedicated Shutdown Instrumentation

The modification provides an alternate DC control voltage source to the emergency switchgear. Dedicated distribution panel A provides an alternate DC control voltage source to 4kV buses 1 and 2 via interconnections with bus 1 cubicle 7 and to 480V buses 1 and 2A. The transfer to the alternate 125 VDC control voltage source is annunciated in the control room. In addition, a UPS (uninterruptible power supply) is located outside of the emergency switchgear room, in the 4KV switchgear room. The UPS supports dedicated shutdown instrumentation which is located in the charging

pump room control panel. The dedicated shutdown instrumentation will provide the following local displays at the charging pump room panel:

- Reactor coolant temperature (3 loops, both hot and cold leg) (2 loops are new)
- Nuclear instrumentation (source-range)
- Steam generator 1 level
- Steam generator 2 level
- Steam generator 3 level
- Pressurizer relief tank level (new)
- Pressurizer level
- Pressurizer pressure
- Pressurizer relief line power operated valves 455c and 456 position display.
- Volume control tank level (new)
- RHR flow (new)
- RHR relief line temperature (new)
- Letdown relief line temperature monitor (new)
- Incore temperature display (new)

Additional instrumentation displays will be provided at the turbine deck control panel to enable auxiliary feedwater pump and steam dump control. Displays are as follows:

- Steam generator levels 1, 2 and 3
- Pressurizer level and pressure
- Condensate storage tank level
- Reactor coolant system temperatures (3 loops hot and cold leg) (2 loops are new)

In the event of a fire in the battery room (or cable spreading room) coincident with a loss of offsite power, a complete loss of site DC power may be experienced. The main consequence of this failure would be the inability to operate circuit breakers to align alternate power sources (most breakers are DC-operated).

To mitigate the consequences of this potential situation a backup onsite power supply is provided to power the shutdown-related loads through 480V bus DS . The breakers supplying the shutdown loads will be either manually operated or electrically (AC)

operated. The onsite power supply and the associated switchgear and appurtenances have been designed and procured to non-seismic Category I criteria, and are not designed to meet single-failure criteria.

Cable routing for the DC power and the previously mentioned dedicated instrument loop is or will be independent of the zones containing normal plant instrumentation wiring. At the sensor installation lead dress will provide as much physical separation as possible to avoid common fire effects.

Instrument Air - Primary Air Compressor

Instrument air is not required for hot-standby operation; however, the continued availability of instrument air will be ensured by providing power and local control to the air compressor located in the turbine building. Power will be from the DS bus and power and control cables will not be routed into the auxiliary building. Operation of the letdown system for cold shutdown boration will utilize this air supply.

Miscellaneous Motor-Operated Valves and Pump Motors

Several motor-operated valves and pumps (required for safe shutdown) will be provided with alternative controls and status indication on the charging pump room panel. These controls will be implemented in a manner similar to that described for the steam-driven auxiliary feedwater pump steam supply valve. All controls will be activated by means of transfer switches, which will disable the existing (control room) controls and transfer control of the valves to the dedicated shutdown panel in the charging pump room. Activation of these transfer switches will be annunciated in the control room. The transfer switches will be mounted in two cabinets, one in fire zone 13 for train A related components and one in fire zone 5 for train B related components. Appropriate separation between safety-related power systems and nonsafety-related circuits shall be provided and is depicted on Figure 8 for a typical valve to indicate separation and control schemes. Isolation circuits shall be employed to prevent fault transfer including hot shorts between the control room, cable spreading room and the transfer switch area.

Components to be provided with alternative controls include the following:

- Pressurizer relief tank isolation valves 535 and 536
- Pressurizer spray control valve 311
- Steam-driven auxiliary feedwater pump-oil bearing pump
- Boric acid pump A
- Boric acid heat trace A
- Boric acid tank heater A
- Auxiliary building HVAC input fan HVS-1
- Letdown line isolation valve 460A
- Orifice valve 200A
- Pressurizer heaters (control group)

RHR Pump

Residual heat removal pump A will be utilized to provide the decay heat removal necessary to achieve and maintain cold shutdown. Power for the pump and its associated cooler fan unit is to remain connected to emergency bus E1. In the event that a fire in fire zone 28, the emergency switchgear room, or the control room is encountered, alternative power feeds from a predesignated breaker at the dedicated shutdown bus will be installed. Cables and procedures to accomplish the interconnections will be available at the site and the reconnection will be accomplished while the plant remains in the stable hot-standby mode. Routing of cables shall be outside the auxiliary building with a direct connection to the dedicated shutdown bus.

Safe-Shutdown Electrical Distribution System

The 480V dedicated shutdown bus will have the nonsafety-related shutdown loads (charging pump A, component cooling pump A, pressurizer heaters, and primary air compressor) permanently connected to the bus. This bus is normally fed from offsite power, but can be connected to the dedicated diesel generator from the diesel generator control panel, located in the turbine deck switchgear room. A motor control center will be located in the turbine deck switchgear room and will provide power to the shutdown valves and small motor pumps as shown on Figure 11. These loads will include feedwater valves V1-8A, V1-8B, V1-8C, V2-14A, V2-14B, V2-14C;

the service water valve V6-12D; the pressurizer relief line block valves V535 and V536; the oil bearing pump for the steam driven feedwater pump; the boric acid pump A, Tank A heater and associated heat trace, and the auxiliary building inlet HVAC fan. Instrumentation power (120 VAC) is supplied by an uninterruptible power supply which is normally powered from the dedicated 480V bus. All circuit breakers on the 480V DS bus (with the exception of the feeder breakers) are provided with AC control power from the DS bus itself. The feeder breakers are operated using the 48V DC battery system associated with the uninterruptible power supply.

Repair Procedures for Cold Shutdown

In addition to the above described repair procedures for the RHR pumps, repair procedures also may be written to install emergency (temporary) cables for other cold shutdown equipment.

At the present time, the modifications associated with establishing a dedicated cold shutdown capability are at the conceptual design stage, consequently, detailed design drawings of cold shutdown cable and conduit routing have not yet been developed.

For the cold shutdown modifications listed in Section 6.0 and described in this section, portions of the proposed cable runs may be identified during the detailed design phase to be installed as part of a cable repair procedure that will require only pulling and termination of the cable.

Modifications will be made to the extent that cable repair procedures can be written such that repairs can be made within 72 hours. Cables and procedures to accomplish the cable pulling and the terminations will be available at the site.

Table 1
Functional and Hardware Requirements for Achieving and Maintaining Cold Shutdown Conditions

Plant Functional Requirements	Equipment Functional Requirements	Minimum Equipment Requirements
Monitor and control primary system inventory and pressure	Monitor RCS inventory	One wide-range pressurizer level indicator
	Inject borated makeup water	One charging pump and injection path or one SI pump and injection path
	Provide borated makeup water source	Boric acid pump and tank or RWST (manual valve alignment)
	Monitor RCS pressure	One wide-range pressure indicator
	Control pressure-increase	One charging pump and injection path or one SI pump and injection path
	Control pressure-decrease	One charging pump and pressurizer auxiliary spray line
Remove decay heat by:		
a) Feedwater addition to the steam generators with steam venting to atmosphere	Provide feedwater	One steam-driven pump and associated valves and oil bearing pumps
	Monitor condensate tank level	One tank level monitor
	Monitor steam generator level	One wide-range level indicator per loop

Table 1
Functional and Hardware Requirements for Achieving and Maintaining Cold Shutdown Conditions (Continued)

Plant Functional Requirements	Equipment Functional Requirements	Minimum Equipment Requirements
	Vent main steam to atmosphere	Three main steam PORVs and positioners
	Monitor RCS temperature	Temperature sensors and associated instrumentation for hot and cold leg indication from each loop
b) Decay heat removal to cold shutdown	Remove residual heat	One RHR pump, heat exchanger and associated valve train
Verify reactor is subcritical	Monitor RCS boron concentration or startup range neutron flux to ensure that subcriticality is maintained	One sample cooler HX and valve train or the dedicated system neutron monitor channel
Auxiliary services required by the components that directly perform the above functions	Component cooling	One pump with HX and associated valve train
	Service water	One pump and associated valve train
	4160-Vac and 480-Vac power distribution	480-V bus DS, 480-V DS MCC, DS diesel generator, and 4kV Bus 3 (if offsite power is available)

Table 1
Functional and Hardware Requirements for Achieving and Maintaining Cold Shutdown Conditions (Continued)

Plant Functional Requirements	Equipment Functional Requirements	Minimum Equipment Requirements
	120-Vac power distribution	Dedicated shutdown 120-Vac uninterruptible power supply
	125-Vdc power distribution	DC power supplies from dedicated shutdown power
	RHR pump area cooling, charging, pump cooler	One cooler per system
Auxiliary services provided for operator convenience	Instrument air	One compressor

TABLE 2

REFERENCE DRAWINGS - PARTIAL LISTING

Drawing Number	Revision	Title
5137-E-6100		Control Wiring Diagram for Service Water Pump D
SH. 1	2	
2	2	
3	3	
4	4	
5137-E-6101		Control Wiring Diagram for Steam-Driven FWP Steam Shutoff Valve V1-8A
SH. 1	4	
2	4	
3	2	
5137-E-6109	6	Interconnection Diagram, Annunciator DSA
5137-E-6110	5	Interconnection Diagram, Annunciator DSB
5137-E-6115		Control Wiring Diagram for Steam-Driven FWP Shutoff Valve V2-14A
SH. 1	3	
2	4	
3	5	
5137-E-6116		Control Wiring Diagram for Service Water Discharge Valve V6-12D
SH. 1	2	
2	4	
3	5	
5137-E-6211		Interconnection Diagram, Charging Pump Room Control Panel
SH. 1	5	
3	3	

TABLE 2 (Cont'd)

REFERENCE DRAWINGS - PARTIAL LISTING

Drawing Number	Revision	Title
5137-E-6212		Interconnection Diagram, Turbine Deck Panel
SH. 1	3	
2	3	
3	4	
4	3	
5137-E-6213		Interconnection Diagram, Local/Remote CB Panels
SH. 7	4	
17	5	
23	5	
5137-E-6215		Interconnection Diagram, Emergency DC Power Supply System
SH. 1	5	
2	6	
5137-E-6216		Interconnection Diagram, Dedicated Shutdown Instrumentation
SH. 1	7	
2	1	
5137-E-6217	5	Alternate Power Connection Diagram, MCC-5
5137-E-6218	2	Interconnection Diagram, Remote Transfer Switch Panel, V1-8A
5137-E-6219	2	Interconnection Diagram, Remote Transfer Switch Panel, V2-14A

TABLE 2 (Cont'd)

REFERENCE DRAWINGS - PARTIAL LISTING

Drawing Number	Revision	Title
5137-E-6220		Interconnection Diagram, Steam Dump Control System
SH. 1	1	
2	5	
5137-E-6311		
SH. 1	7	Reactor Auxiliary Building Ground Floor - Conduits
2	7	Reactor Auxiliary Building Upper Floor - Conduits
3	7	Charging Pump Room - Conduits
4	8	Turbine Generator Area Switchgear Room - Conduits
5	8	Mezzanine Deck - Conduits
6	6	Control Room - Conduits
7	3	Reactor Building - Conduits
5137-E-6313		Charging Pump Room Control Panel Layout
SH. 1	7	
2	1	
3	0	
5137-E-6314		Turbine Deck Control Panel Layout
SH. 1	6	
2	1	
5137-E-6318	5	Mimic Bus Panel Layout
5137-E-6319		Transfer Switch Panel V1-8A and V2-14A
SH. 1	3	
2	0	

NOTES:

1. ◆ INDICATES COMPONENT SUBJECT TO CONTROL/OPERATION AS PART OF THE ALTERNATIVE SHUTDOWN CAPABILITY.
2. M.O. INDICATES DEVICE TO BE MANUALLY OPERATED IF REQUIRED.

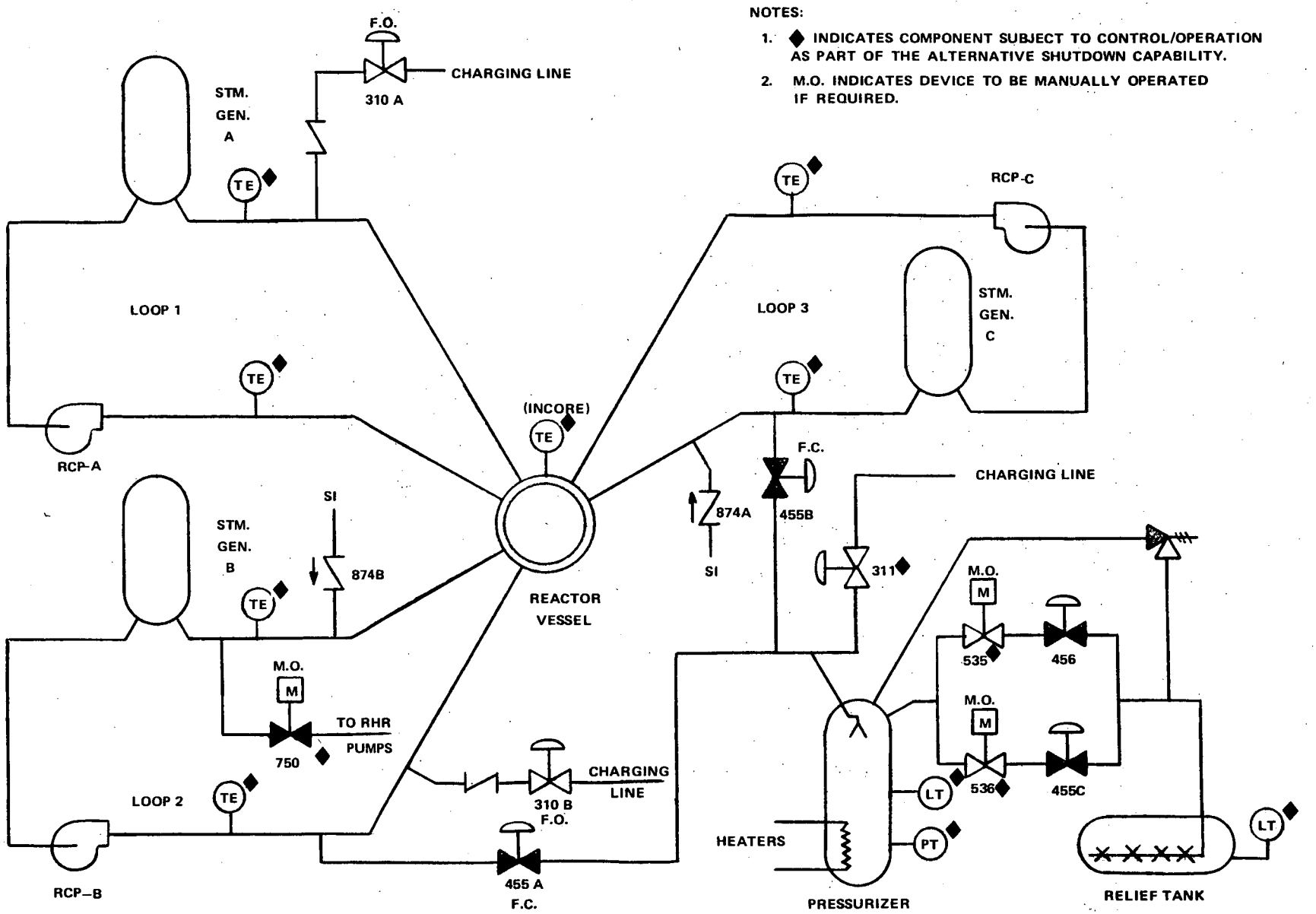

REACTOR COOLANT SYSTEM
FIGURE 1, SHEET 1

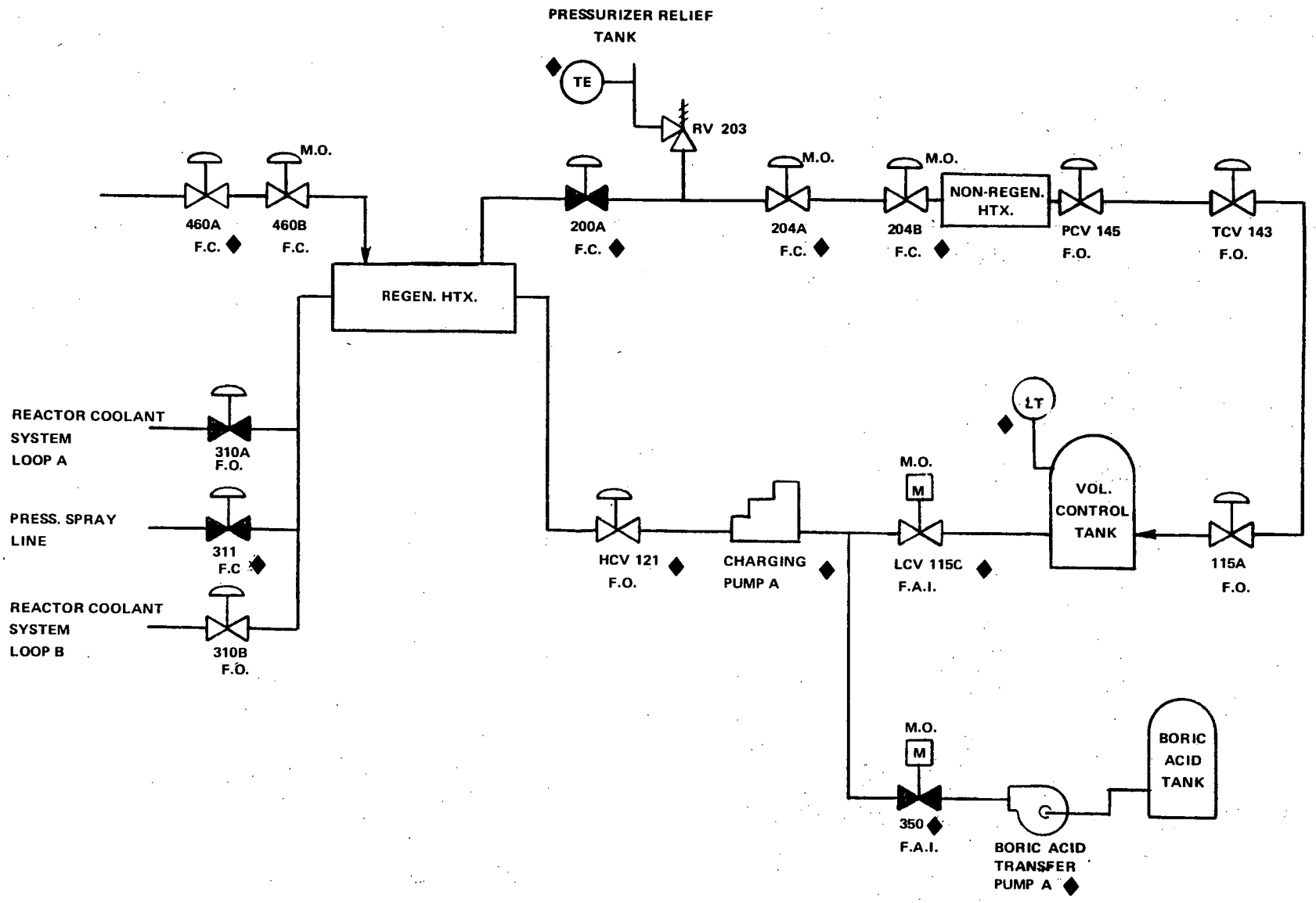

LETDOWN AND CHARGING SYSTEMS
FIGURE 1, SHEET 2

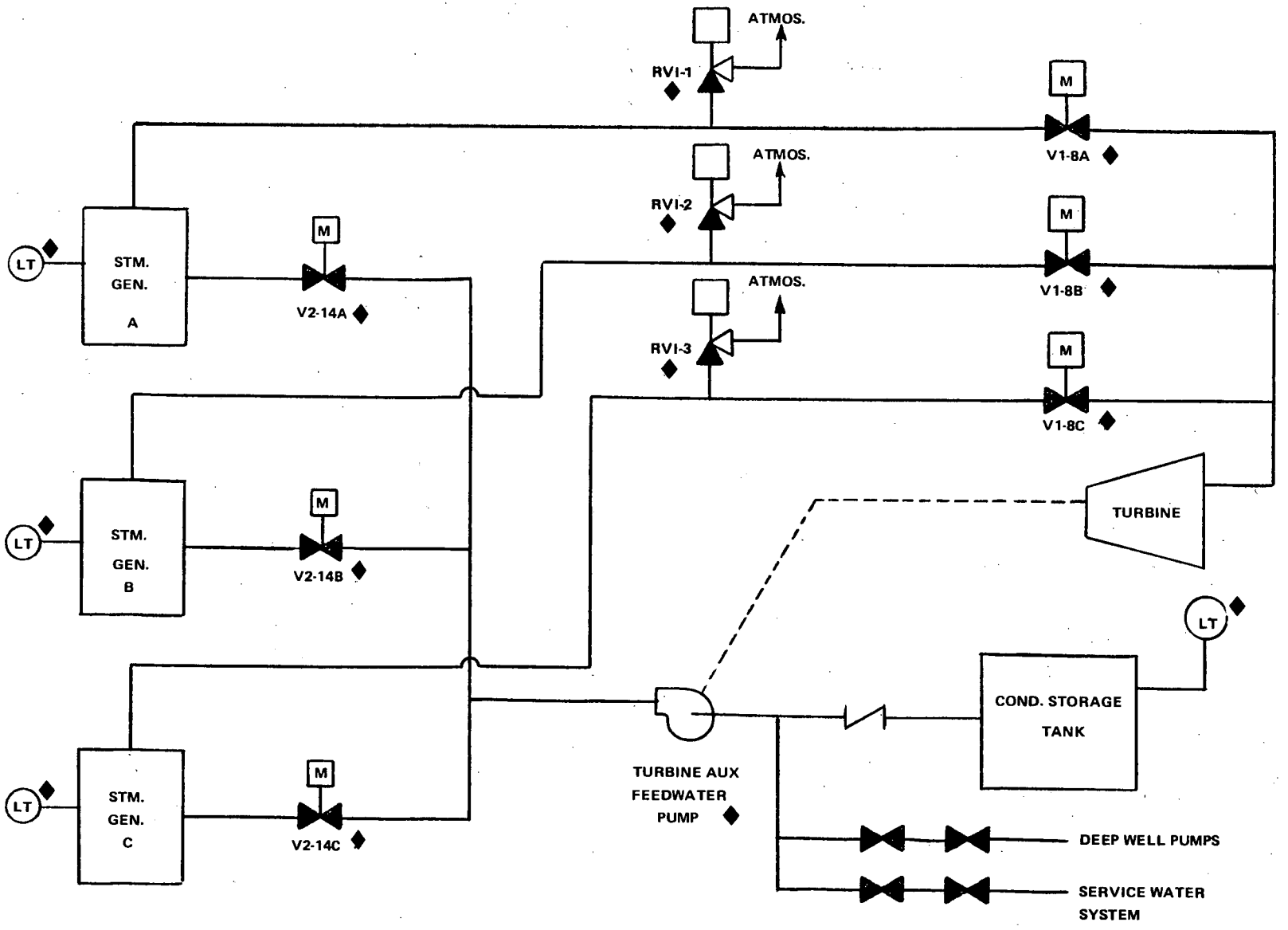

FEEDWATER, CONDENSATE AND STEAM EXTRACTION SYSTEMS
FIGURE 1, SHEET 3

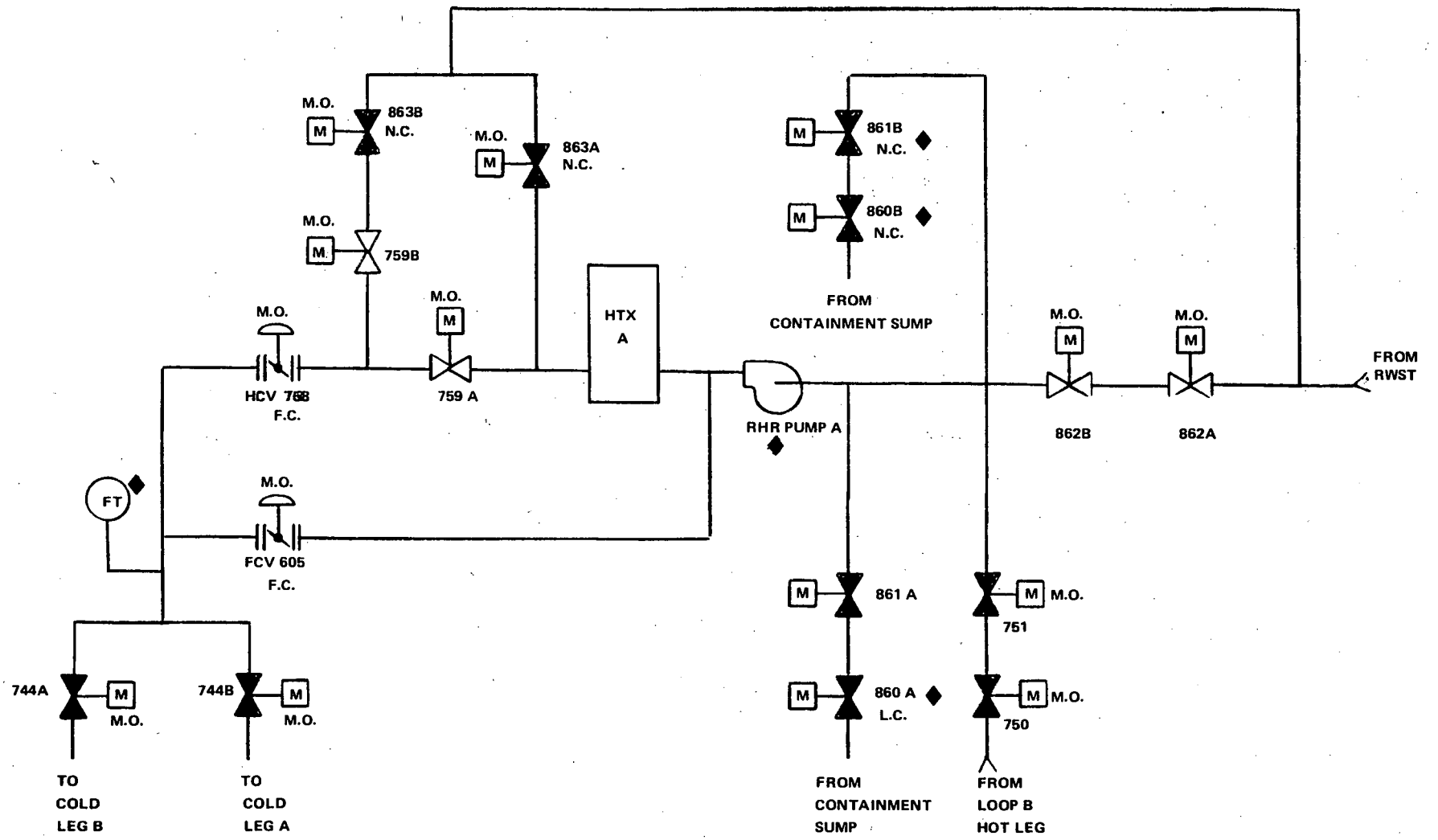

RESIDUAL HEAT REMOVAL SYSTEM
FIGURE 1, SHEET 4

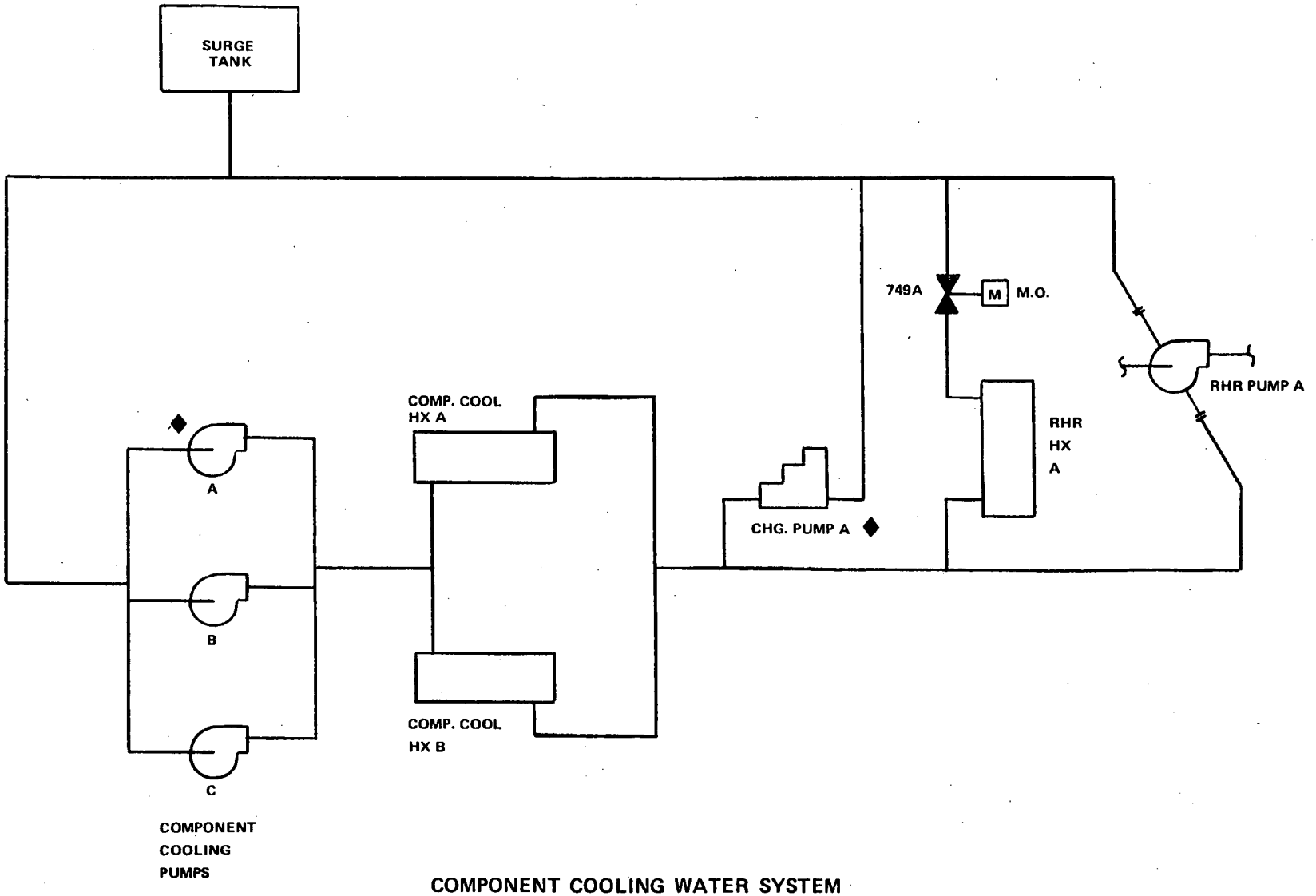

COMPONENT COOLING WATER SYSTEM

FIGURE 1, SHEET 5

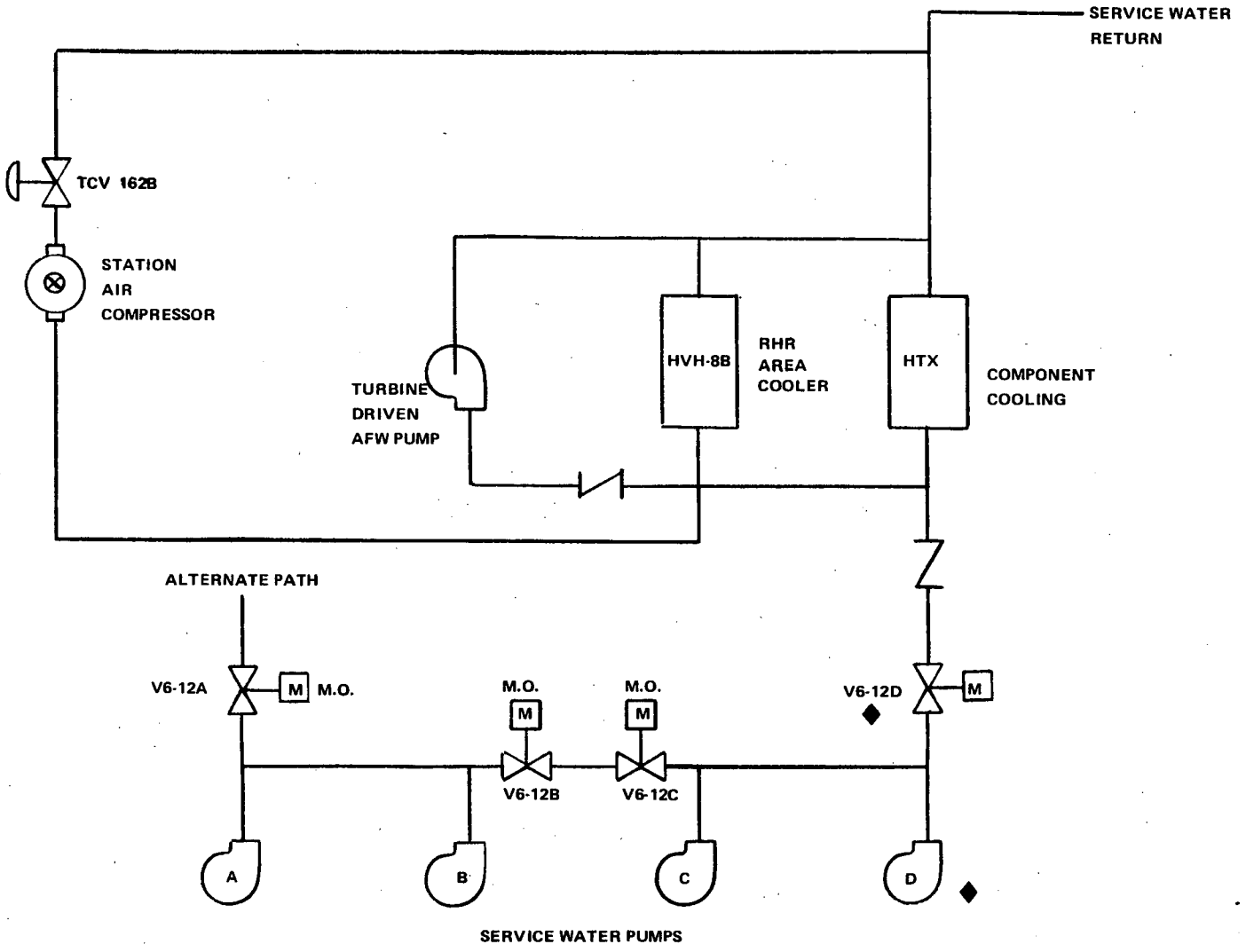

SERVICE WATER SYSTEM

FIGURE 1, SHEET 6

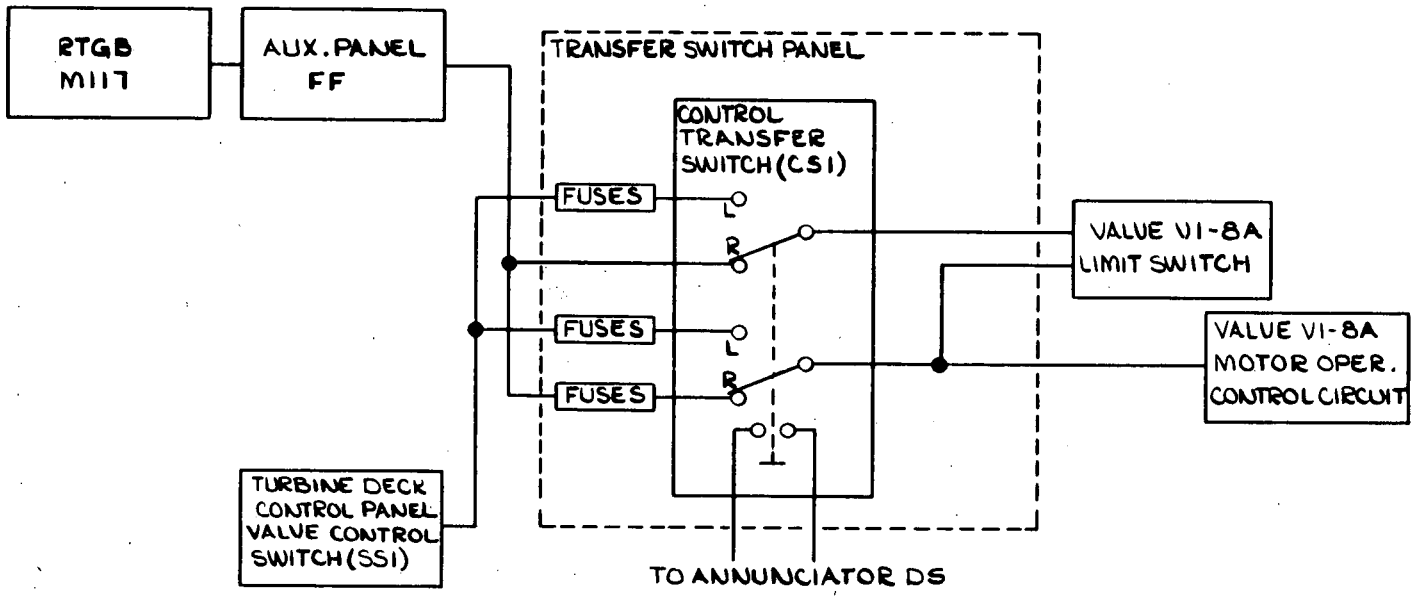

NOTES

1. SWITCH CS1 IS SHOWN IN REMOTE CONTROL POSITION.
2. REFER TO NUS DRAWING 5137-E-6101, -6109, -6218, -6314 & -6318.

FIGURE 2

STEAM DRIVEN FWP STEAM SHUTOFF VALVE V1-8A

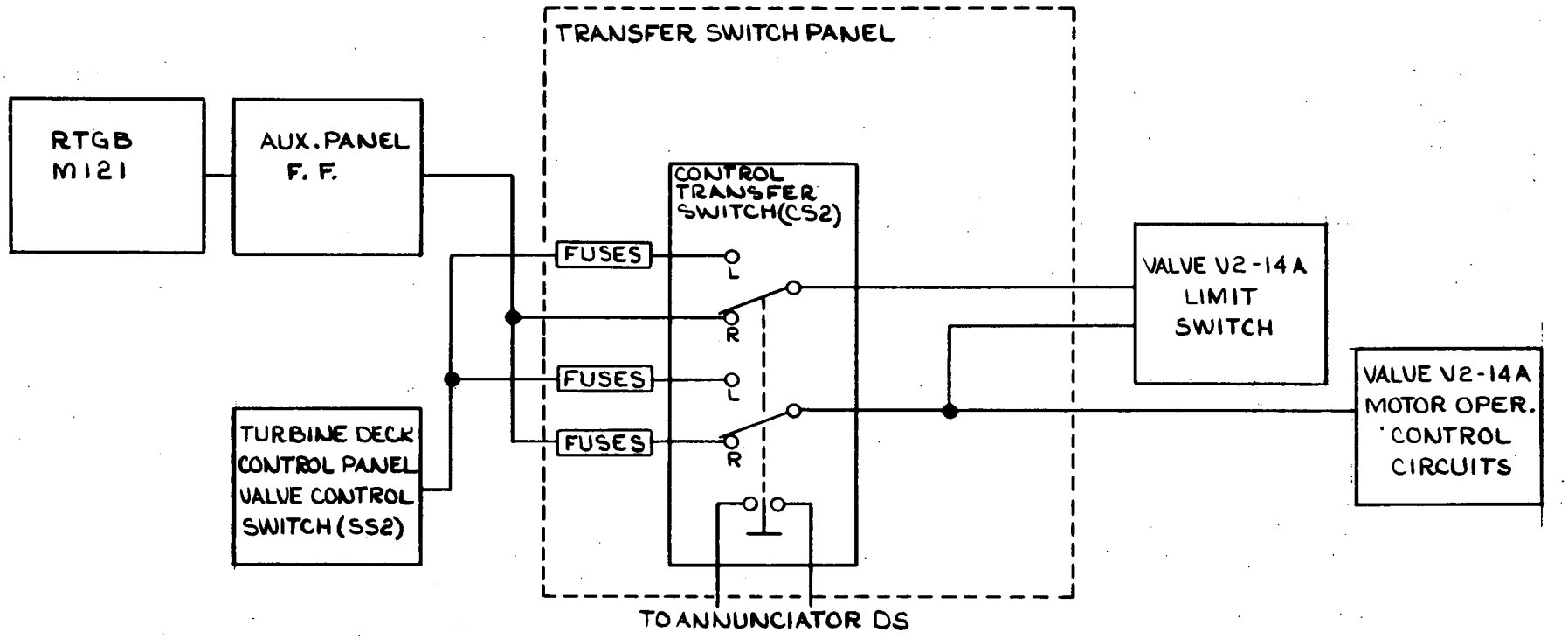

NOTES

1. SWITCH CS2 SHOWN IN REMOTE CONTROL POSITION.
2. REFER TO NUS DRAWINGS 5137-E-6109, -6115, -6219, -6314 & -6319.

FIGURE 3

STEAM DRIVEN FWP STEAM SHUTOFF VALVE V2-14A

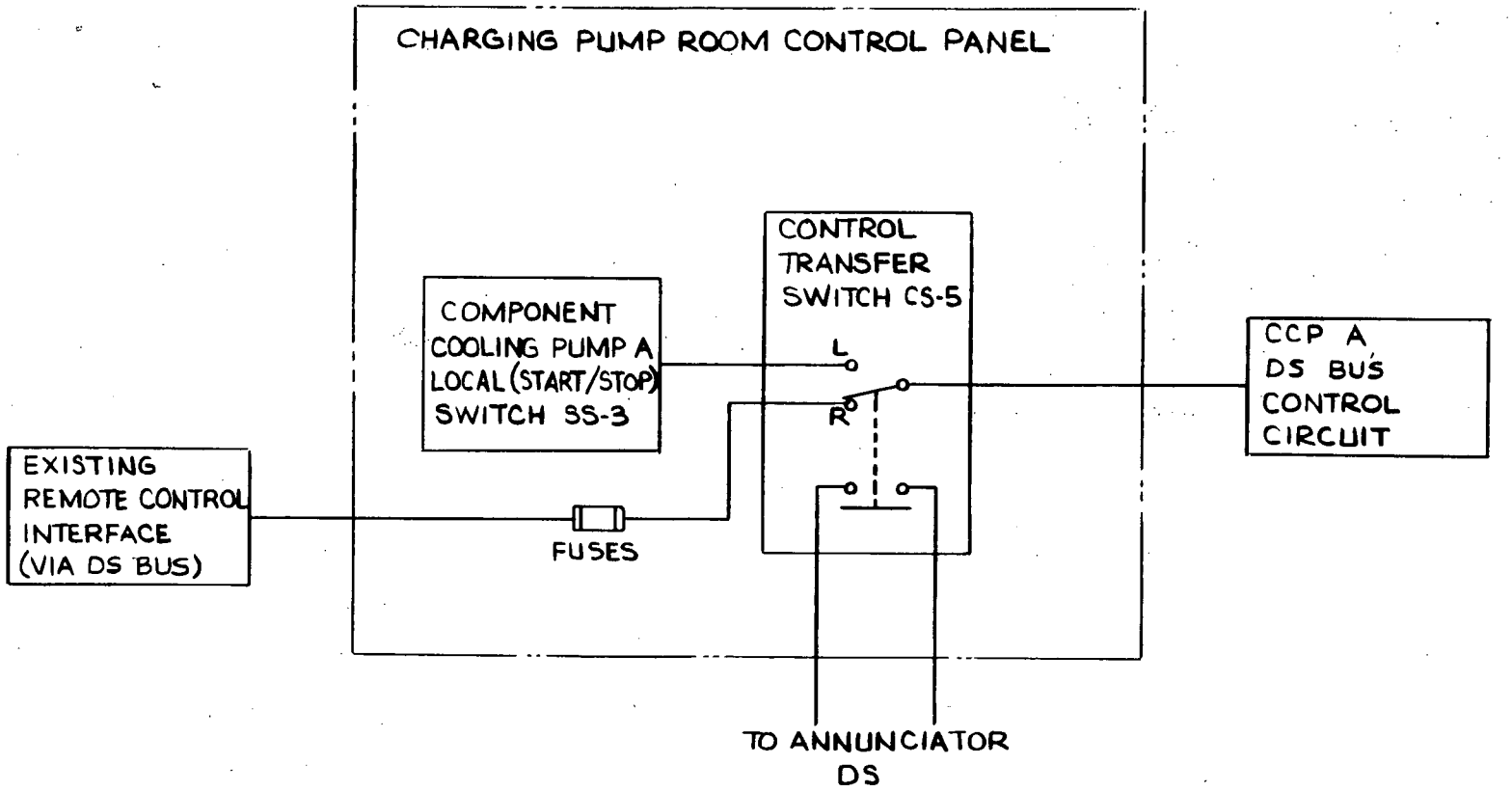

NOTES:

1. SWITCH CS-5 SHOWN IN REMOTE CONTROL POSITION
2. REFERENCE: NUS DRAWINGS 5137-E-6110, 5137-E-6211, AND 5137-E-6313

FIGURE 4
COMPONENT COOLING PUMP "A" CONTROL TRANSFER

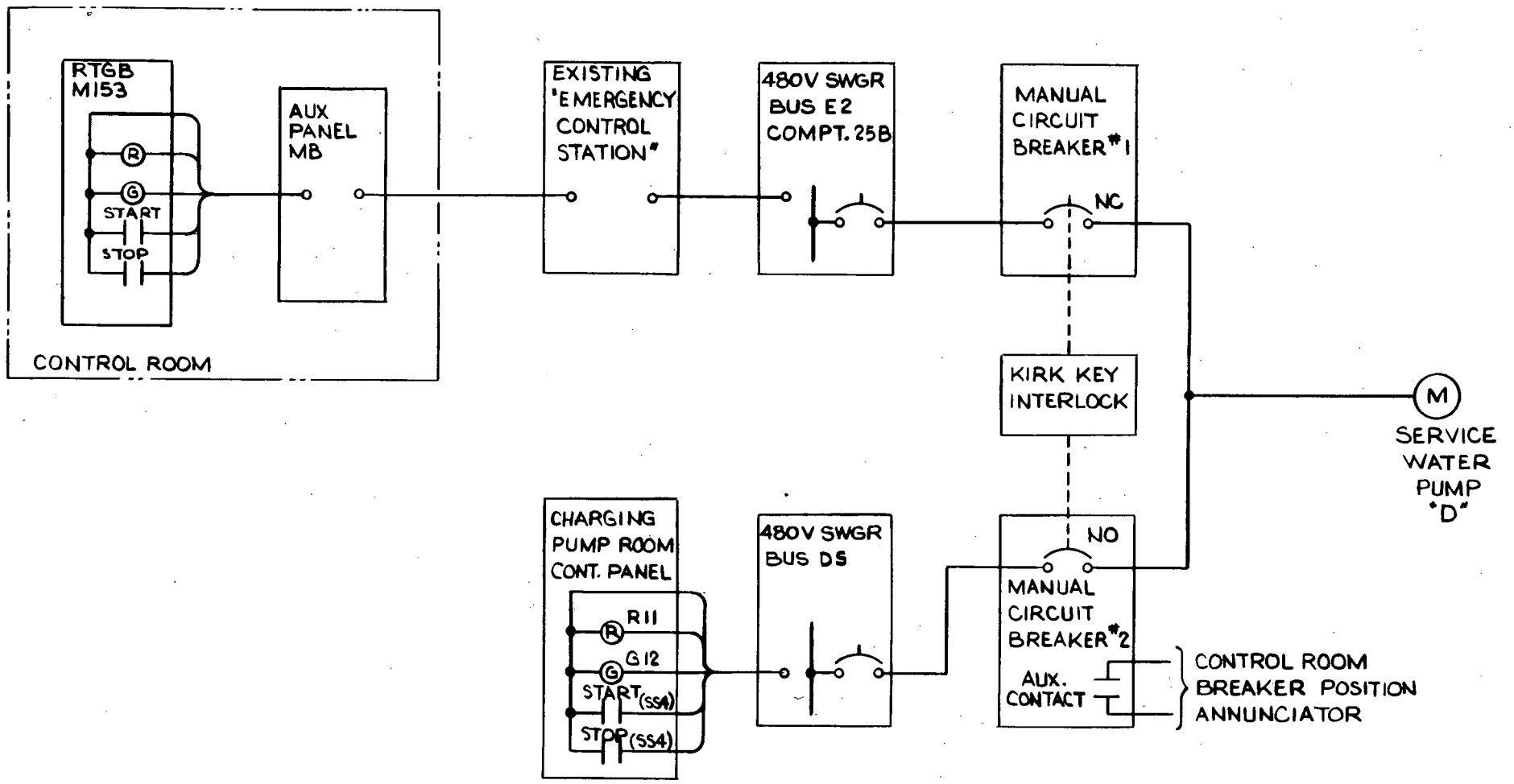

NOTE:

1. REFER TO NUS DWG 5137-E-6000, SHT. 1-4 FOR WIRING DETAILS

FIGURE 5
SERVICE WATER PUMP "D"

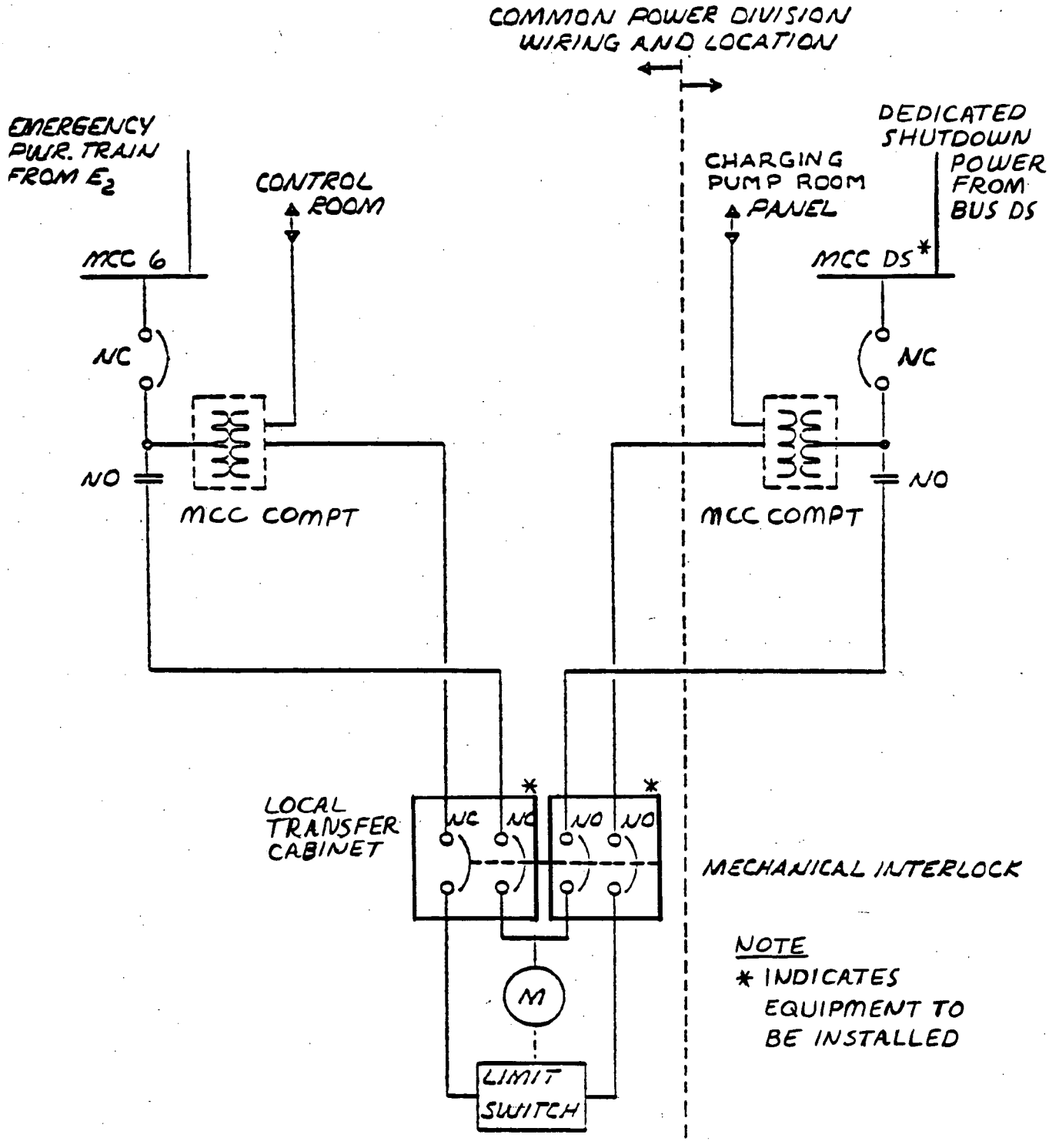

FIGURE 6
SERVICE WATER DISCHARGE VALVE V6-12D

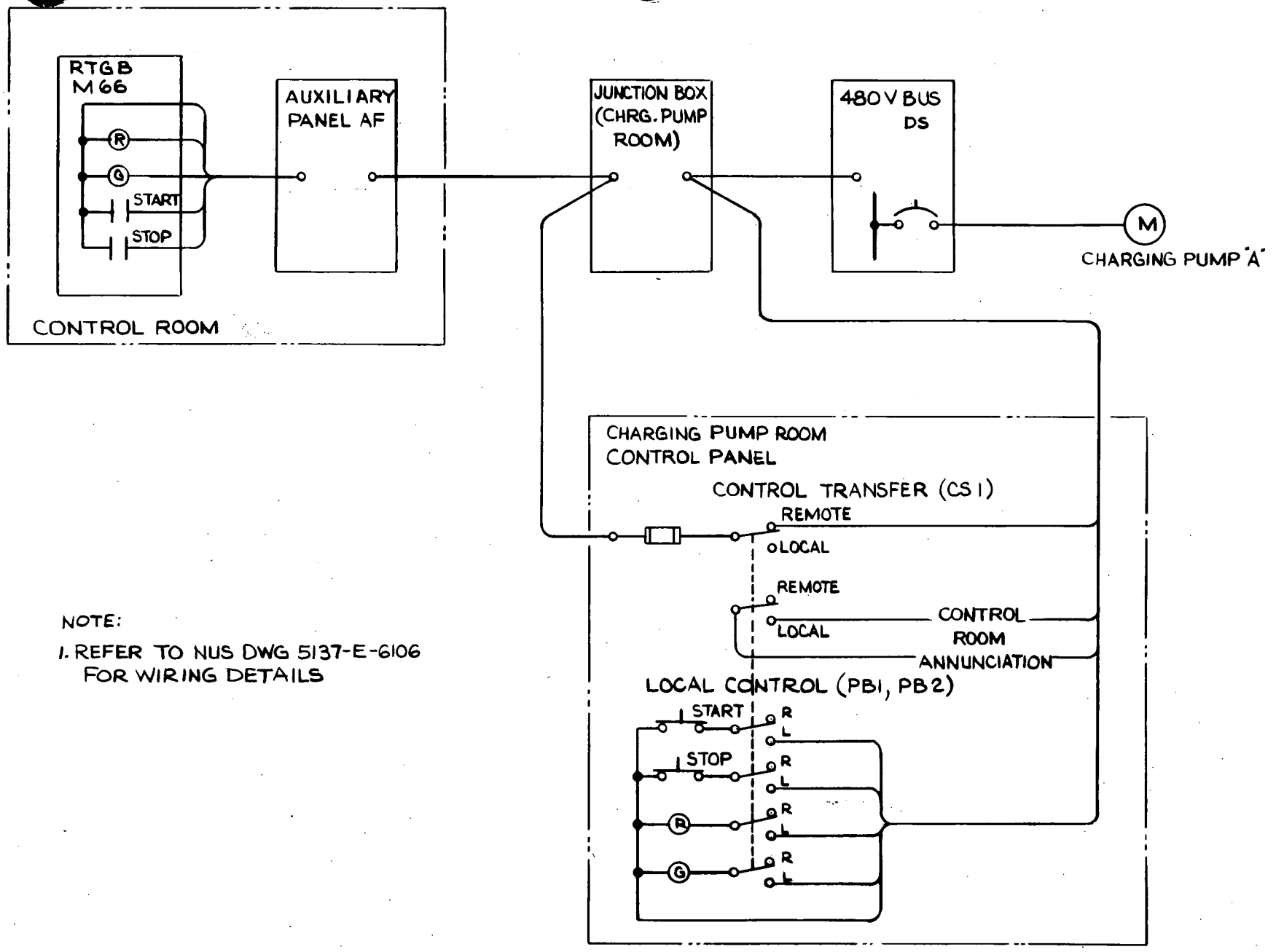

NOTE:

1. REFER TO NUS DWG 5137-E-6106 FOR WIRING DETAILS

FIGURE 7
CHARGING PUMP "A"

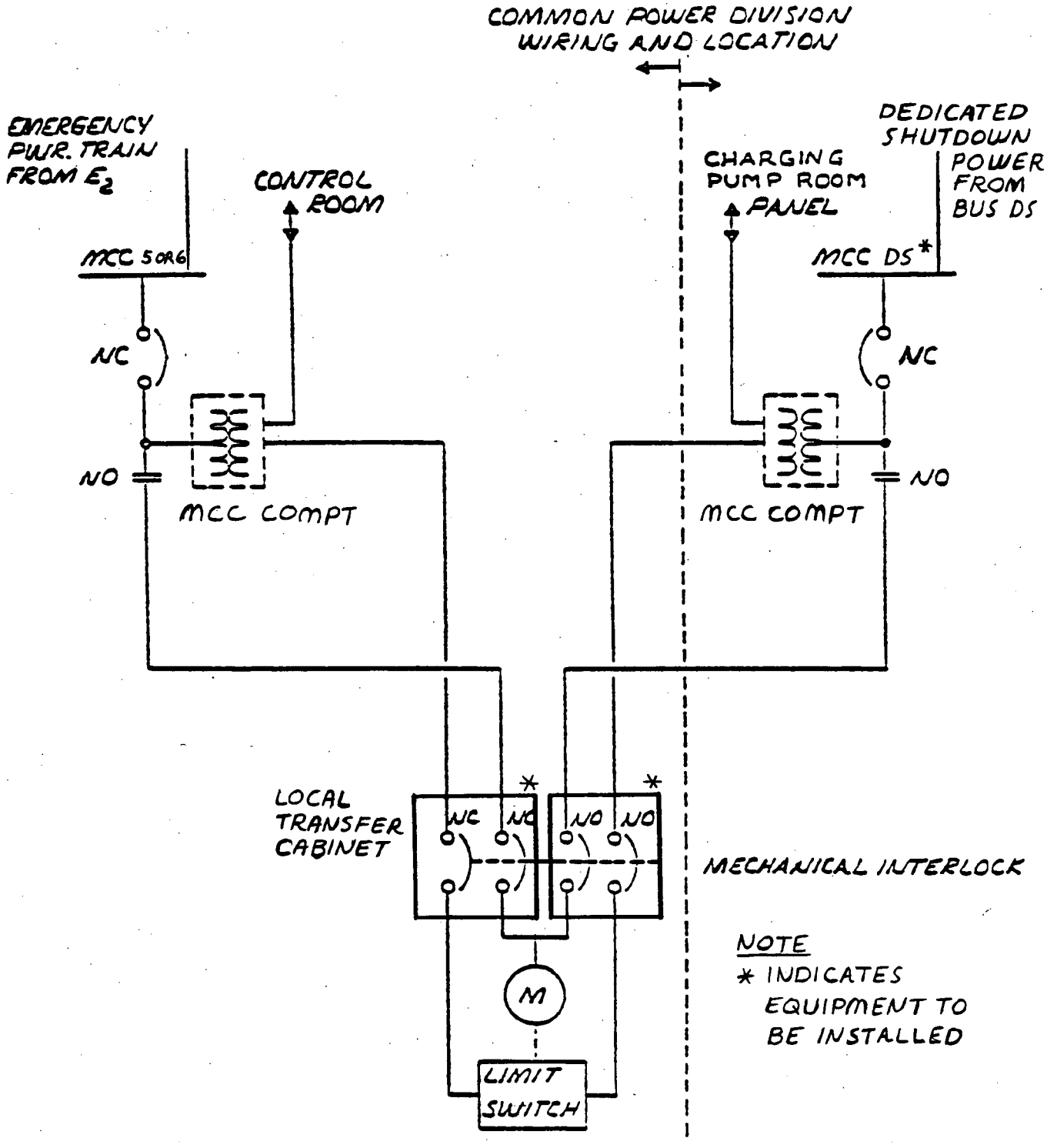

FIGURE 8

TYPICAL VALVE CONTROL MODIFICATION

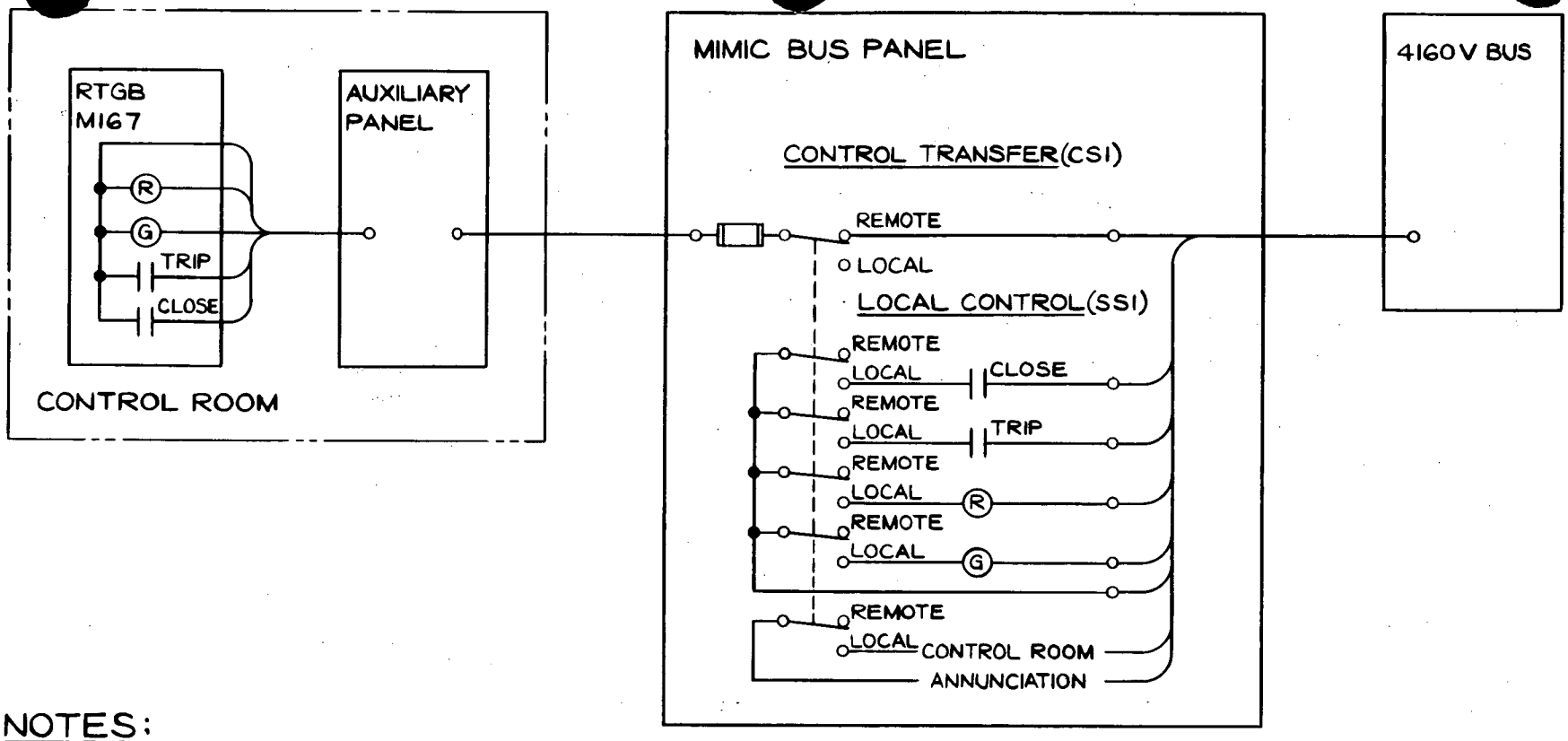

NOTES:

1. THIS SCHEMATIC IS TYPICAL FOR BREAKER CONTROLS ON THE MIMIC BUS PANEL, AND APPLIES TO THE FOLLOWING BREAKERS:

CIRCUIT BREAKER	MIMIC BUS PANEL CONT. SWS.
4160V BUS 3, CUB. 17	CS 3 SS 3
480V BUS 3, CUB. 16B	CS 12 SS 12
480V BUS 3, CUB. 15B	CS 10 SS 10
4160V BUS 3, CUB. 15	CS 7 SS 7
4160V BUS 3, CUB. 19	CS 13 SS 13

2. REFER TO NUS DWG. 5137-E-6213 FOR WIRING DETAILS.

FIGURE 9

TYPICAL MIMIC PANEL BREAKER CONTROLS

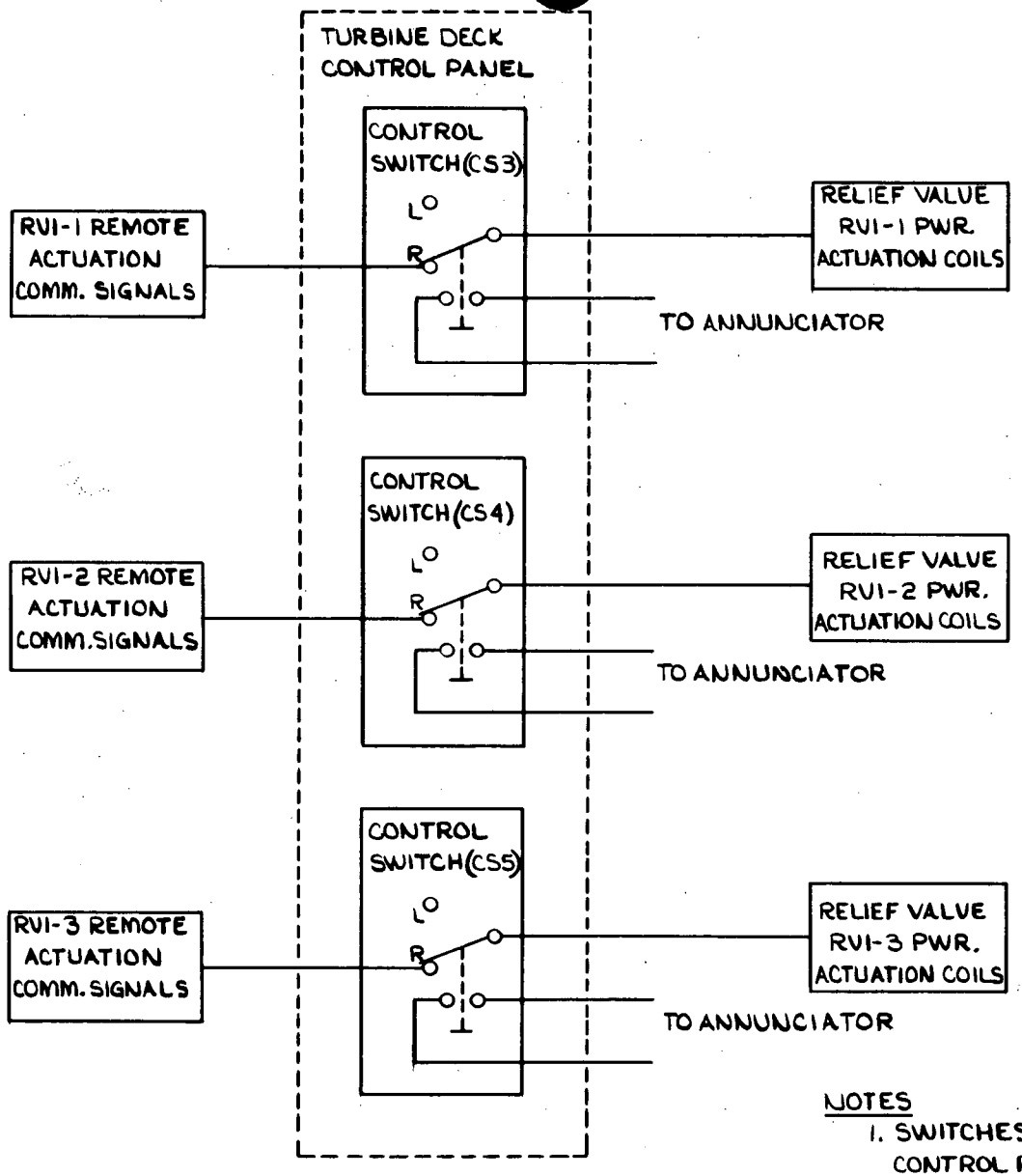

NOTES

1. SWITCHES SHOWN IN REMOTE CONTROL POSITION.
2. REFER TO NUS DRAWING 5137-E-6109, -6220 & -6314.

FIGURE 10
STEAM DUMP VALVE CONTROL

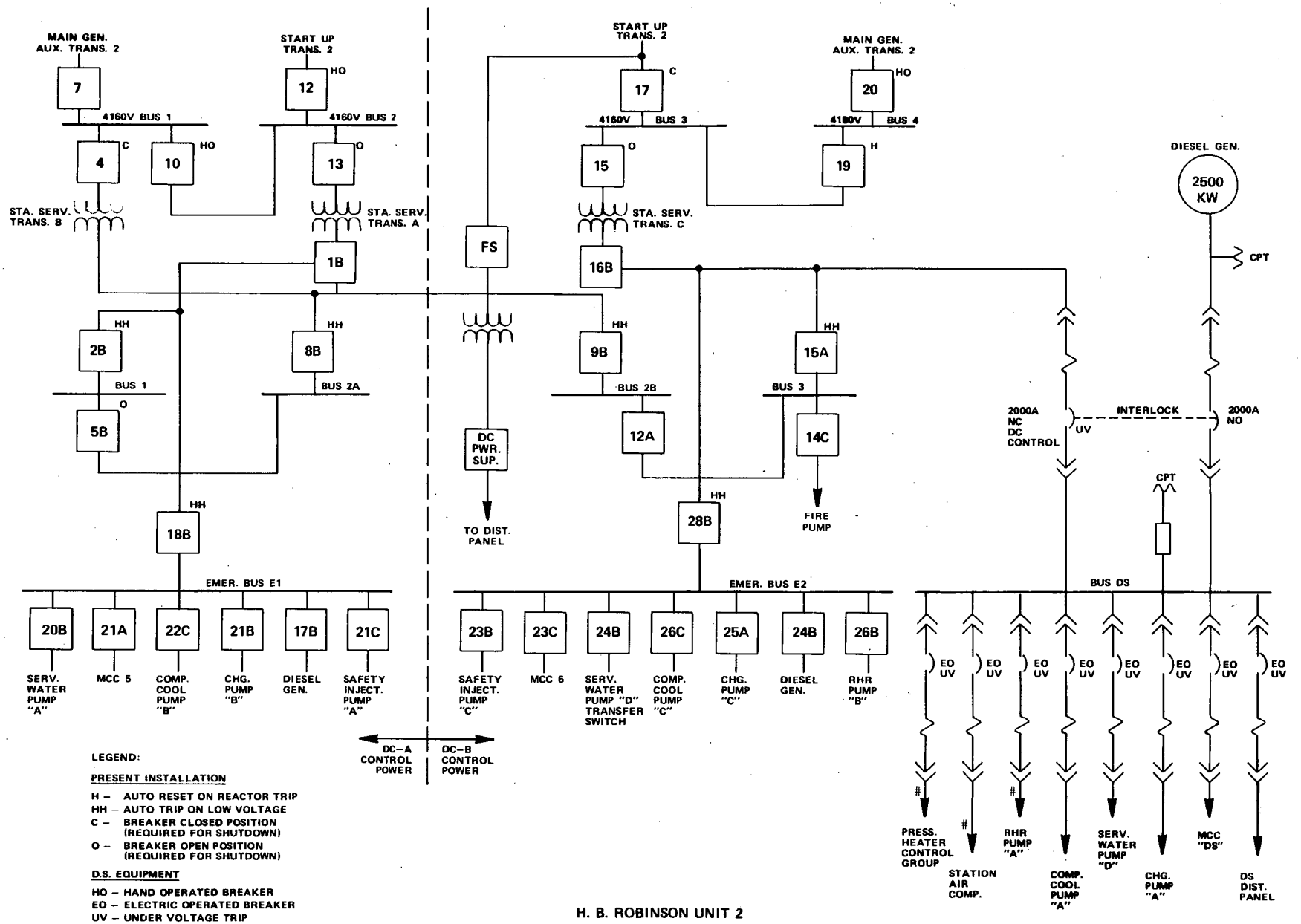

H. B. ROBINSON UNIT 2
DEDICATED SHUTDOWN POWER

FIGURE 11
Sheet 1 of 2

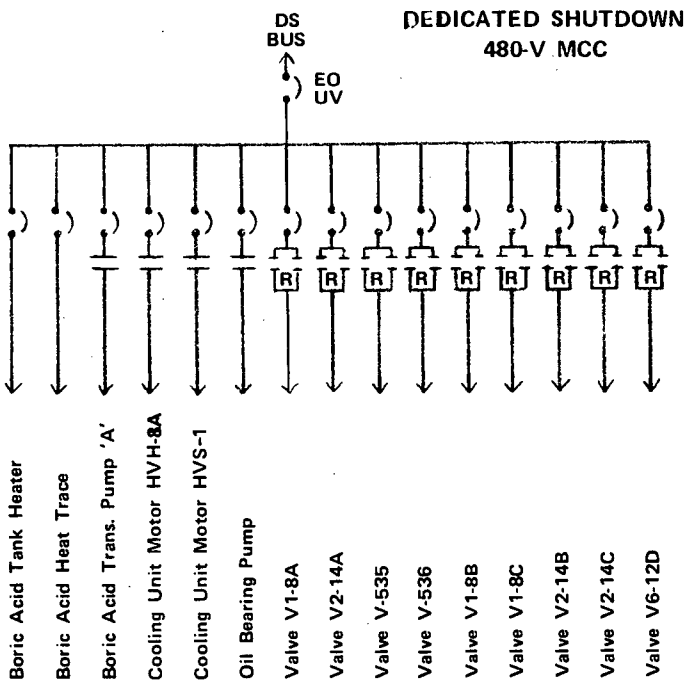

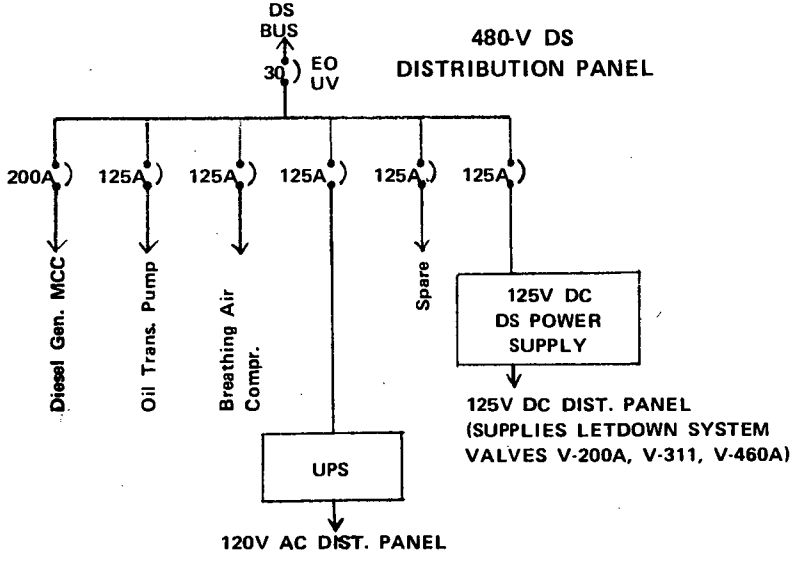

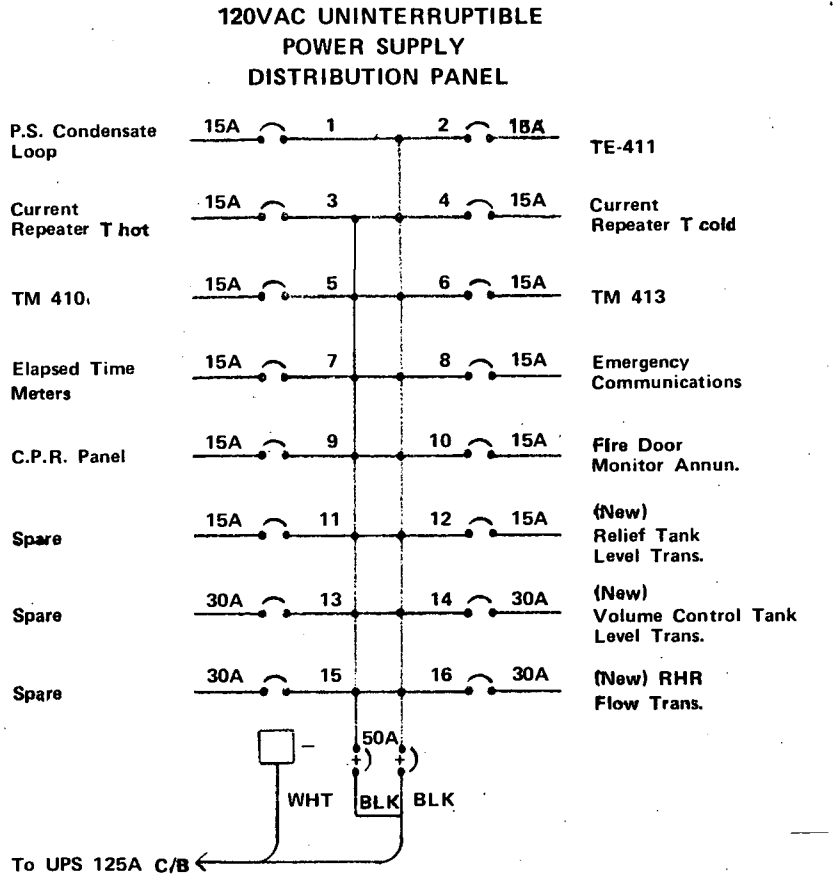

FIGURE 11

Sheet 2 of 2

8(b) System design by drawings which show normal and alternate shutdown control and power circuits, location of components, and that wiring which is in the area and the wiring which is out of the area that required the alternate system.

Hot Standby Capability

A description of the systems used to provide normal and alternative shutdown capabilities is given in the response to question 8(a).

All new components that provide power or control capabilities for the dedicated shutdown system hot standby capability have been located so that alternate power sources or control stations will not be affected by a fire that could damage the normal shutdown systems. In addition, all conduits and cable for the dedicated shutdown systems have generally been routed through areas that will not be affected by fires that could damage systems normally required for shutdown.

Where it was not possible to route redundant cables through separate fire areas (e.g., inside containment), alternative separation provisions in accordance with 10CFR50, Appendix R, Section IIIG have been installed to provide equivalent separation.

In some cases existing power and control cables for the normal shutdown equipment have also been rerouted to avoid hazardous areas. All new cable has been installed in rigid steel conduit routed through areas remote from cables presently used for the normal shutdown systems.

The location of all new control panels and equipment and the routing of all new wiring and conduits required for the dedicated shutdown system hot standby capability are shown in detail on NUS Drawing 5137-E-6311, Sheets 1 through 7.

Table 3 is a matrix that summarizes the location of all cables involved in the existing dedicated shutdown system and identifies the fire zones through which the cables for each system are routed. (Actual cable/conduit routing details are provided in the design documentation listed on Table 2.) Although Table 3 describes equipment associated with the existing hot standby capability, several items shown on the table have not yet been installed. These modifications, which are identified in the "Remarks" column as MR - Modification Required, are presently at the conceptual design stage and will

be implemented concurrently with the cold shutdown modifications. The cable routing guidelines provided by Table 3 will be used in developing the actual cable/conduit routing design.

Cold Shutdown Capability

At the present time, the modifications associated with establishing a dedicated cold shutdown capability are at the conceptual design stage. Consequently, detailed design drawings of cold shutdown cable and conduit routing have not yet been developed. However, Table 4 is a matrix that identifies the proposed routing for cold-shutdown cables. (See page A-8, Repair Procedures for Cold Shutdown.)

The proposed cable routes have been selected in accordance with the same criteria used in the development of the existing hot-standby capability. Where practicable, circuits serving redundant shutdown-related functions will be routed through separate fire areas; where this level of separation cannot be achieved, alternative measures (as espoused in 10CFR50, Appendix R, Section III G, or their equivalent) will be applied to ensure that adequate separation is maintained.

Table 3
Location of Hot Standby Equipment and Cabling by Fire Zone

Safe Shutdown Component	4	5	6	8	9	10	11	12	13	15	16	17	19	20	22	23	24	25	26	27	28	TB	WH	OS	IS	Remarks
Letdown System																										(Valve positions indicated for loss of air)
Valves																										
LCV460A					C						C		C	C	C	C	C	X/C			C					FC
LCV460B						C					C		C	C	C	C	C	X/C			C					FC
200A,B,C					C						C		C	C	C	C	C	X/C			C					FC
204A,B											C		C	C	C	C					X/C					FC
PCV145											C		C	C	C	C					X/C					FO
TCV143											C		C	C	C	C					X/C					FO
LCV115A	X/C										C		C	C	C	C					X/C					FO
Charging System																										(Valve positions indicated for loss of air)
Charging Pump A	X/P/C																				P/C	P/C	P/C			
Valves																										
LCV115C																										FAI
HCV121									C		C		C	C	C	C					X/C					FO
350									C		C		C	C	C	C					X/C					MO
310A					C						C		C	C	C	C	C	X/C								FO
310B						C					C		C	C	C	C	C	X/C								FO
Pressurizer Pressure	C/P						C										C	X/C			C	P	C/P			
Pressurizer Level	C/P						C										C	X/C			C	P	C/P			
Feedwater System																										
Steam Driven FWP Aux. Oil Pump																						X/P				MR
Valves																										
V2-14 A							P	P														X/P/C	P			
RV1-1																						X/C				MO, Gas Power
RV1-2																						X/C				MO, Gas Power
RV1-3																						X/C				MO, Gas Power
V1-8A								P	P													X/C/P		P		
Loop Temp Th HLA	C				C/P												C	X/C	C	C/P	P					
Loop Temp Tc HCA	C					C/P											C	X/C	C	C/P	P					
Condensate Tank Level	C																			C/P	C/P					
Steam Gen. Levels 1,2,3	C					C											C	X/C	C	C/P	P					
Comp. Cooling Water Sys.																										
Comp Cool Water Pump A	C	P						C	C													P/C		C		
Comp Cool HXB		X																								
Comp Cool Surge Tank		X																								
Service Water System																										
Service Water Pump D	C	P/C					C	C													C	P/C	C	P/C	P/C	
Valve																										
V6-12D		P					P	P													C	P/C	C			

Table 3
Location of Hot Standby Equipment and Cabling by Fire Zone (Continued)

Safe Shutdown Component	4	5	6	8	9	10	11	12	13	15	16	17	19	20	22	23	24	25	26	27	28	TB	WH	OS	IS	Remarks
Neutron Mon NPI	C					X/P											C				C	P				
HVAC System																										
HVS-1 Fan							P/C	P/C		X/P	P			C												MR
Instrument Air System																										
Primary Air Comp																						X/P				MR
Valve																										
PCV 1716				X																						MO
Power Supplies																										
DS-Bus																						X/P		P		
MCC-5		P					X/P	P	P												P	P	P	P		
MCC-DS		P												X/P								P/C				MR, Pwr. from DS bus.

Legend:

MO = Manual operation - i.e., valve override
MR = Modification required to provide routing as listed
P = Power cables
C = Control or instrument cables
X = Location of equipment
TB = Turbine building
WH = Waste holding tank area
OS = Outside of auxiliary building
IS = Intake structure area
FC = Fail closed
FO = Fail open
FAI = Fail as is

Table 4
Location of Cold Shutdown Equipment and Cabling by Fire Zone

Safe Shutdown Component	4	5	6	8	9	10	11	12	13	15	16	17	19	20	22	23	24	25	26	27	28	TB	WH	OS	IS	Remarks
Letdown System																										
Valves																										
LCV460A						P											P	X/P			P					MR, FC
LCV460B																		X								MO, FC
200A						P											P	X/P			P					MR, FC
204A,B																					X					MO, FC
PCV145																					X					FO
TCV143																					X					FO
LCV115A																					X					FO
Non-Regen. HX										X																
Vol. Control Tank Lv	C									X																
535,536	C					P/C											P/C	X/P/C			P/C					MR
Charging System																										
Charging Pump A	X/P/C																				P/C	P/C	P/C			
Boric Acid Pump A	C	X/P																								MR
Regen. Hx.																		X								
Boric Acid Heat Tank & Trace A		P							P/C																	MR
Valves																										
LCV115C	X																									MO
HCV121				X/C																						MO
311	C					C			P/C								P/C	X/C			C	C				MR
310A																		X								MO
310B																		X								MO
350	X/C																									MO
865A																		X								MO
865B																		X								MO
865C																		X								MO
Pressurizer Pressure	C/P					C											C	X/C			C	P	C/P			
Pressurizer Level	C/P					C											C	X/C			C	P	C/P			MR
Pressurizer Heaters	C				P				C								P	P/X			P	C/P	C			MR
Feedwater System																										
Steam Driven FWP Aux. Oil Pump																						X/P				MR
Valves																										
V2-14 A, B		P					P	P	P					P								X/P/C				MO
V2-6 A, B																						X/P				MO
RV1-1																						X				MO
RV1-2																						X				MO
RV1-3																						X				MO
V1-8A								C	P													X/P/C		P		
V1-8B, C		P/C																				X/P/C				MR
Loop Temp Th HLB, HLC	C					C/P											C	X/C	C		C/P	P				MR

Table 4
Location of Cold Shutdown Equipment and Cabling by Fire Zone (Continued)

Safe Shutdown Component	4	5	6	8	9	10	11	12	13	15	16	17	19	20	22	23	24	25	26	27	28	TB	WH	OS	IS	Remarks
Valves (Cont'd)																										
Loop Temp Tc HCA, HCB, HCR	C					C/P											C	X/C			C/P	P				MR
Condensate Tank Level	C																				C/P	C/P				
Steam Gen. Level 1,2,3	C					C											C	X/C			C/P	P				
Comp. Cooling Water Sys.																										
Comp Cool Water Pump A	C	P						C														P/C		C		
Comp Cool HXB		X																								
Comp Cool Surge Tank		X																								
Valve																										
749A																							X			MO
RHR System																										
RHR Pump A																				X/P						
RHR HX. A																							X			
Valves																										
863 A, B																							X			
HCV758																							X/P			MO
861 A, B																				X						MO
860 A, B																				X						MR
750																		X								MO, MR
751																		X								MO
862 A																				X						MO, MR
862 B																				X						MO
744 A																		X								MO
759 A																							X/P			MO
FCV 605																						P/C	X/P			MO
Fan HVE 8A																				X/P						MR
RHR Flow (FE 605)	C/P																				C/P	P	X/C			MR
Service Water System																										
Service Water Pump D	C	P/C						C													C	P/C	C	P/C	P/C	
HVH-8A Cooler																										
Valve																										
V6-12D		P						P													C	P/C	C			
Borate Sample Mon.																										
Hot Leg Sample Vessel			X																							
Sample HX																										
Valves																										
955 A																				X						MO
956 E				X																						MO
956 F				X																						MO

Table 4
Location of Cold Shutdown Equipment and Cabling by Fire Zone (Continued)

Safe Shutdown Component	4	5	6	8	9	10	11	12	13	15	16	17	19	20	22	23	24	25	26	27	28	TB	WH	OS	IS	Remarks
Neutron Mon NPI	C					X/P											C				C	P				
HVAC System																										
HVS-1 Fan		P/C								X/P	P											P				MR
Instrument Air System																										
Primary Air Comp.																						X/P				MR
Valve																										
PCV 1716				X																						MO
Power Supplies																										
MCC-DS																						X/P				MR
DS-Bus																						X/P		P		MR

Legend:

MO = Manual operation - i.e., valve override
MR = Modification required to provide routing as listed
P = Power cables
C = Control or instrument cables
X = Location of equipment
TB = Turbine building
WH = Waste holding tank
OS = Outside of auxiliary building
IS = Intake structure
FO = Fail open
FC = Fail closed
FAI = Fail as is

8(c) Demonstrate that changes to safety systems will not degrade safety systems (e.g., new isolation switches and control switches should meet design criteria and standards in FSAR for electrical equipment in the system that the switch is to be installed; cabinets that the switches are to be mounted in should also meet the same criteria (FSAR) as other safety related cabinets and panels; to avoid inadvertent isolation from the Control Room, the isolation switches should be key-locked, or alarmed in the Control Room if in the "local" or "isolated" position; periodic checks should be made to verify switch is in the proper position for normal operation; and a single transfer switch or other new device should not be a source for a single failure to cause loss of redundant safety systems).

RESPONSE

The engineered safety feature systems were designed in accordance with the applicable General Design Criteria (GDC) effective in 1968. The reactor protection system was also designed in accordance with applicable GDCs and IEEE 279, "Proposed Criteria for Nuclear Power Plant Protection Systems," August 1968. No regulatory guides were available for incorporation into the original design criteria for the engineered safety features.

The dedicated shutdown (hot standby and cold shutdown) system modification does not impact the physical integrity of any safety-related system components. The only interfaces with the existing reactor coolant system pressure boundary are for the installation of new instrument lines for new dedicated shutdown system instrumentation. The modification does not impact the system process and the dedicated shutdown system will continue to meet all of the original mechanical and operational design criteria.

The electrical portion of the modification complies with the original design criteria for engineered safety features as defined by applicable GDCs effective in 1968. The modification provides for:

Separation of Redundant Circuits

Where safety-related circuits have been modified, new wiring and components have been installed and the Control Panel is to be wired such that the separation requirements of Regulatory Guide 1.75 Rev. 2 are met. The basis for the modification (fire hazards analysis) dictates that power and control wiring for selected components (e.g., one charging pump, one service water pump) be rerouted so that cables serving redundant pumps do not pass through common fire areas.

Fault Isolation for Safety-Related Circuits and Power Supplies

Electrical isolation is provided to ensure that external faults (fire-induced) will not degrade existing or new safety-related electrical systems (see responses to items 8e and g).

Separation of Safety and Non-Safety-Related Circuits

Isolation devices and/or physical separation are provided to ensure that failures in non-safety-related circuits will not jeopardize adjacent safety-related circuits (see responses to items 8b, d, and e).

Annunciation in Main Control Room on Bypass or Assumption of Local Control

For those components provided with a "control transfer" feature, auxiliary contacts on each control transfer switch are used to provide annunciation (in the control room) when the component is switched out of its "remote control" mode.

This annunciation feature has been implemented for all auxiliary shutdown components having remote/local control capabilities.

Interlocks and Administrative Controls to Limit the Consequence of Faulted Conditions

Electromechanical key interlocks on selected circuit breakers prevent the inadvertent cross-connection or simultaneous faulting of redundant power supplies.

Seismic Installation in Safety-Related Areas or Safety-Related Cabinets

Interfaces with existing safety-related cabinets and new safety-related cabinets (e.g., charging pump room panel, transfer switch panels) and their included components have been designed to remain functional through a safe shutdown earthquake (SSE).

Single-Failure Criterion

All new safety-related components and safety-related interfaces are designed so that no single failure can cause the loss of redundant safety systems. The modifications affect only one train of redundant equipment (e.g., one charging pump, one component cooling pump). The failure of any one of these equipment trains will not initiate the failure of the redundant train; electrical and physical separation of the redundant trains have not been degraded as a result of the modification.

Cold-Shutdown Capability

The above criteria will be applied in the development of the detailed design for the cold-shutdown modification, to ensure that any additional hardware changes do not degrade existing safety-related systems.

8(d) Demonstrate that wiring, including power sources for the control circuit and equipment operation for the alternate shutdown method, is independent of equipment wiring in the area to be avoided.

RESPONSE

As discussed in the response to Question 8(a), the intent of the alternative/dedicated shutdown modification is to ensure the operability of at least one train of components, in the event of a fire in any single fire zone, to perform all functions required to achieve cold shutdown conditions. Several fire zones have been identified as "critical" in that cables for redundant shutdown-related components are routed through these areas. Consequently, a severe fire in one of these areas may incapacitate redundant equipment trains by destroying power and control cables or by damaging power supplies (switchgear, motor control centers, or batteries). The critical areas include the control room, cable spreading room, emergency switchgear room, and battery room.

All cables serving alternative shutdown components are routed so as to avoid these areas. In addition, the alternative shutdown cables are routed so as to avoid routing redundant cables (serving the normal and alternative device) through the same fire zone wherever possible. Where redundant circuits must be routed through the same fire zone, and adequate spatial separation cannot be achieved, separation in the form of rated fire barriers will be provided or it will be shown that other equipment is available for safe shutdown.

Power sources (480 VAC, 125 VDC, 120 VAC) for shutdown and cooldown operation are located so that the normal and alternative sources are not exposed to common fire hazards. The normal (safety-related) 125 VDC and 120 VAC sources are located in the battery room and emergency switchgear room. The dedicated 125 VDC and 120 VAC sources are located in the 4 KV switchgear room of the turbine building which is physically remote from the battery and emergency switchgear rooms. The dedicated shutdown 480-VAC bus and motor control center are also located in the 4 KV switchgear room of the turbine building. Routing of cables connected to these power sources will be in accordance with the separation criteria previously described. Cable routing by fire zone is provided on Table 3 and Table 4 in the response to Question 8(b).

8(e) Demonstrate that alternate shutdown power sources, including all breakers, have isolation devices in control circuits that are routed through the area to be avoided, even if the breaker is to be operated manually.

RESPONSE

Detailed control wiring diagrams for existing and modified plant equipment involved in the alternative shutdown system are listed on Table 2. The following paragraphs discuss the methods used to isolate power and control circuits of the alternative shutdown equipment from those used for normal shutdown.

Steam-Driven Feedwater Pump Shutoff Valves V1-8A and V2-14A

Figures 2 and 3 are simplified control diagrams for these two valves. Transfer switches have been provided on a panel in the auxiliary building to transfer control of the valves to a control panel located on the turbine deck. When the transfer switches are moved to the "local" position all control circuits for these valves routed to the main control room or to auxiliary panel "FF" are effectively isolated from the alternative control circuits.

In the event that a fire or other event causes a short circuit in the normal (remote) control circuits before the transfer switches are operated, the fuses in these circuits will open before damage can occur in the alternate control circuit. These isolation fuses are coordinated with the fuses in the valve motor operator control circuits to ensure that the control power supply fuses do not open due to faults in the remote control cables. Additional fuses have been provided in the transfer switch panel to ensure that the motor operator control circuits are not damaged by faults in the local control circuits at the turbine deck control panel.

As part of the cold shutdown modification, the alternative shutdown controls for valves V1-8A and V2-14A will be modified to establish a configuration similar to that shown on Figure 8. This arrangement will permit the transfer of power and control for these valves from MCC-5 to the alternative shutdown power source and control panel in the event of a fire. The isolation features will not be degraded by this modification; the magnetic contactors and local transfer switches, along with isolators

(fuses) in control circuits, will ensure that the valve control circuits are not damaged prior to assuming control at the appropriate shutdown panel.

The control/power modification as described conceptually for V1-8A will also be implemented for the following cold-shutdown-related components:

- Feedwater pump valves V1-8B, V1-8C, V2-14B, and V2-14C
- Letdown system valve LCV-460A
- Boric acid pump A
- Boric acid heat tracing A
- Boric acid tank A heater
- Pressurizer relief line block valves V535 & V536
- Aux. pressurizer spray line valve 311
- Letdown line orifice valve 200A
- Aux. feedwater pump (turbine) oil bearing pump
- Auxiliary building inlet fan unit HVS-1

Component Cooling Pump A

Figure 4 is a simplified control diagram for component cooling pump A, showing the isolation devices for the control circuits. (Component cooling pump A has been permanently assigned to DS bus.) The transfer switch and fuses located in the charging pump room panel effectively isolate all circuits required for local control in the event of damage to existing controls in the main control room or the associated cables. The fuses are coordinated with control fuses at the circuit breaker to ensure that the breaker controls remain operative in the event of a fault in the remote control circuits.

Pressurizer Heaters (Control Group)

The pressurizer heater control group will be permanently assigned to the DS bus and will utilize control transfer features simil ar to those described for the component cooling Pump A. Alternative control will be located at the charging pump room shutdown panel.

Service Water Pump D

Figure 5 is a simplified control diagram for service water pump D. Manual circuit breakers 1 and 2 have been provided with interlocks to ensure that faults in the normal power supply will not affect the availability of the alternative power supply system for this pump. The alternative control for this pump is located in the charging pump room control panel and is completely separate from the normal control system; therefore, isolation devices are not required for the remote controls.

Service Water Discharge Valve V6-12D

Figure 6 shows the control system modification for valve V6-12D. The normal supply for this valve operator is from MCC-6 and control from the main Control Room. The alternative power source and control location will be from DS-MCC with a control switch at the charging pump room panel. Isolation of the circuits will be accomplished by means of the magnetic contactors in MCC-6 and DS-MCC and the transfer switches which are located inside the auxiliary building. In addition, cables for the normal and alternative control circuits are routed in areas remote from each other.

Charging Pump A

Figure 7 is a simplified control diagram for the existing control circuits for this pump. When the transfer switches are placed in the "Local" position all control circuits for this pump which is routed to the main control room are effectively isolated from the alternative control circuits. Coordinated fuses in the remote control circuits will isolate faulted parts of these remote control circuits from the alternative controls before the manual transfer is accomplished.

4KV and 480V Switchgear

The responses to questions 8a and 8k describe the methods for providing power to the shutdown loads from the dedicated shutdown bus. Those breakers controlling the supply of offsite power to the shutdown loads (DS bus) are connected to a "local-remote" breaker control panel located in the 4KV switchgear room. Figure 9 gives a typical breaker control configuration for this panel. The control power cable from the cable spreading room runs through a "quick-blow" fuse in the control panel.

The breaker to be operated is outfitted with a "slo-blow" fuse. In the event of a short in the normal control power cable, the "quick-blow" fuse would blow prior to the "slo-blow" fuse in the breaker. Thus the breaker could still be operated by switching the breaker "local-remote" switch to the "local" position. This switching is annunciated in the Control Room.

Residual Heat Removal Pump A and HVH-8B Cooler

In the event of a severe fire that damages power or control cables associated with RHR pump A, repair procedures will be effected to install temporary cables between a spare breaker on the DS bus to the RHR pump A and HVH-8B. The breaker on the DS bus will then be closed manually to apply power to the pump and cooler. Consequently, the alternative feeder is completely independent of the normal power and controls, and isolation devices are not required.

8(f) Demonstrate that licensee procedure(s) have been developed which describe the tasks to be performed to effect the shutdown method. A summary of these procedures should be reviewed by the staff.

RESPONSE

At the present time, the alternative/dedicated shutdown system is configured to provide a hot-standby operation capability. Plant shutdown operation utilizing the dedicated shutdown features is accomplished in accordance with emergency procedure (EI-18). Copies of these procedures are maintained at the Robinson Plant for NRC review and inspection.

Following completion of the cold-shutdown modification, these procedures will be upgraded to provide for the operation of additional shutdown-related equipment.

8(g) Demonstrate that spare fuses are available for control circuits where these fuses may be required in supplying power to control circuits used for the shutdown method and may be blown by the effects of a cable spreading room fire. The spare fuses should be located convenient to the existing fuses. The shutdown procedures should inform the operator to check these fuses.

RESPONSE

The response to question 8(e) details which equipment necessary for the operation of the dedicated shutdown system, is fused to prevent loss of all control capability due to the effects of a fire in the cable spreading room, control room, or relay room. Spare fuses will be located inside each dedicated shutdown control or switching panel and inside each breaker necessary to provide power for the alternative shutdown system. The status of all shutdown equipment (e.g., valve position, breaker position) will be indicated visually by lights on the dedicated shutdown control panels. A blown fuse common to both the normal and dedicated shutdown control power supplies (such as in a 480V breaker) would be indicated by a failure of the affected valve, breaker or pump to operate from the local control panel. Operating procedures for the dedicated shutdown system contain instructions to the operator to inspect, and if necessary, replace the appropriate fuse(s). These emergency operating procedures will be available at the Robinson Plant for NRC inspection.

8(h) Demonstrate that the manpower required to perform the shutdown functions using the procedures of (f) as well as to provide fire brigade members to fight the fire is available as required by the fire brigade technical specifications.

RESPONSE

As stated in Technical Specifications 6.2.2f, "A Plant Fire Brigade of at least 5 members shall be maintained on site at all times. This excludes 3 members of the minimum shift crew necessary for safe shutdown of the plant. . . ." These requirements will provide sufficient personnel to take the plant to hot standby as is presently provided with the existing dedicated shutdown equipment.

If additional manpower is required to go to cold shutdown from hot standby, credit will be taken for availability of off-site personnel from other shifts.

Following completion of the modifications required to meet Appendix R and preparation/revision of operating procedures, manpower requirements will be assessed and revisions as necessary will be made to the Technical Specification.

8(i) Demonstrate that adequate acceptance tests are performed. These should verify that: equipment operates from the local control station when the transfer or isolation switch is placed in the "local" position and that the equipment cannot be operated from the control room; and that equipment operates from the control room but cannot be operated at the local control station when the transfer or isolation switch is in the "remote" position.

RESPONSE

Acceptance test procedures are developed as an integral part of the plant modification packages under which the dedicated shutdown modifications are implemented. New equipment is not placed in operation, nor is (existing) modified equipment returned to operation prior to successful completion, review, and sign-off of an approved acceptance test procedure.

The procedures are designed to fully demonstrate the alternative/dedicated shutdown capabilities as follows:

- Verify operability of shutdown-related equipment from both normal and alternative shutdown controls.
- Verify operability of interlocks between normal and alternative shutdown controls.
- Verify operability of equipment status lights and annunciators.
- Verify operability of control and power transfer circuits.
- Verify operability of dedicated shutdown power sources.
- Verify operability and accuracy of dedicated shutdown instrumentation.

Completed acceptance test procedures are retained with the original plant modification packages, and are available at the Robinson Plant for NRC inspection.

8(j) Technical Specifications of the surveillance requirements and limiting conditions for operation for that equipment not already covered by existing Tech. Specs. For example, if new isolation and control switches are added to the service water system, the existing Tech. Specs. surveillance requirements on the service water system should add a statement similar to the following: "Every third pump test should also verify that the pump starts from the alternate shutdown station after moving all service water isolation switches to the local control position."

RESPONSE

On December 2, 1980, CP&L submitted a technical specification change request reflecting changes and additions to the plant as a result of dedicated shutdown system modifications that would take the plant to hot standby. These specifications have not been approved at this time. Following completion of the detailed design of the changes required to meet Appendix R, CP&L will amend the previous submittal with appropriate changes.

8(k) Demonstrate that the systems available are adequate to perform the necessary shutdown functions. The functions required should be based on previous analyses, if possible (e.g., in the FSAR, such as a loss of normal a.c. power or shutdown on a Group I isolation (BWR)). The equipment required for the alternate capability should be the same or equivalent to that relied on in the above analyses.

RESPONSE

The operational functions required to achieve and maintain a shutdown condition are identified on Table 1 in the response to Question 8(a). These functions correspond to those listed in Section 14.1.12 of the H. B. Robinson Unit 2 FSAR. The referenced section of the FSAR discusses the functions required for a shutdown following a loss of AC power; the same functions would be required for shutdown following a postulated fire. The operability of the shutdown functions for both hot standby and cold shutdown cases presume that offsite power is not available, but dedicated diesel provides power for the functions identified here.

The functions required for shutdown and the adequacy of the equipment provided to perform these functions are discussed below.

Monitor and Control Primary System Coolant Inventory

The Chemical and Volume Control System is provided with 3 charging pumps. As stated in Section 9.2.2 of the FSAR, one charging pump is adequate to provide full charging flow and the reactor coolant pump seal water supply during normal seal leakage. For this reason, the operability of one charging pump (A) was ensured by rerouting power and control circuits, and by providing an alternate control location (charging pump room panel).

In order to monitor primary coolant level and primary coolant system pressure, one channel each of pressurizer level and pressurizer pressure instrumentation have been provided on the charging pump room panel and turbine deck panel. By providing one dedicated channel for each parameter, primary coolant conditions can be adequately monitored. Consequently, instrument lines, electrical cables, and power sources have been provided for the operation of this instrumentation.

Remove Decay Heat by Means of Feedwater Addition to the Steam Generators, With Atmospheric Venting of Steam

Section 14.1.12 of the FSAR describes an acceptable method of decay heat removal using the secondary system. The auxiliary feedwater pump (steam-driven) is utilized for steam generator feedwater, because the analysis of FSAR Section 14.1.12 postulated a loss of AC power.

To effectively utilize the secondary system for decay heat removal, two steam generators must be fed; level instrumentation for all three steam generators has been provided at both local shutdown panels.

The referenced FSAR analysis takes credit for operation of the steam generator safety relief valves and power-operated relief valves in order to vent steam to the atmosphere. To ensure the availability of full steam-venting capability, the control circuits for the power-operated relief valves (3) were modified to allow local control.

Monitor Reactor Coolant Neutron Level To Assure That Subcriticality Is Maintained

While maintaining a hot-standby condition, reactor coolant neutron level can be adequately monitored by one startup range neutron channel. A dedicated instrument channel, connected to an existing detector, has been installed in the south cable vault. Reactor coolant sampling provides an alternative means of monitoring RCS neutron monitor level.

Required Auxiliary Services

Component Cooling Water:

As stated in Section 9.3 of the FSAR, one component cooling loop (pump and heat exchanger) will provide cooling for all components in the auxiliary and containment buildings. Consequently, the operability of one pump (A) has been ensured by rerouting of power and control cables and provision of an alternate (local) control capability.

Service Water:

To ensure the operability of one service water pump (D) and its associated discharge valve (V6-12D), power and control cables have been provided. Only one pumping train has been modified, because the cooling requirements are assumed to be lower than those specified in the FSAR (i.e., it is assumed that a LOCA does not occur coincident with the postulated fire). Although cooldown time is extended with reduced service water capacity, one pump will provide sufficient flow to permit cooldown operation.

Decay Heat Removal to Cold Shutdown Conditions

In order to bring the unit to cold shutdown conditions, operation of at least one RHR equipment train (pump, heat exchanger, valve train) is required. As described in Section 9.3 of the FSAR, each RHR train is capable of removing decay heat and operation of one train is adequate to achieve cold shutdown conditions (FSAR Section 9.3.1).

To ensure the operability of the RHR decay heat removal function, fire protection features will be installed to ensure the availability of one pump following a fire in the pit. As described in the response to Question 8(a), power for this pump will be available from the dedicated shutdown bus. Valve alignment will be accomplished by manual operation and system operation will be provided by manual adjustment. A dedicated channel of RHR flow instrumentation will provide flow indication on the shutdown panel in the charging pump room.

480-V AC 125-V DC Electrical Power

Refer to the response to Question 8(a). The power system includes the following:

- Redistribution of shutdown related loads to a dedicated system (DS) 480V switchgear bus. This bus is normally fed from offsite power but can be switched over (at turbine deck) to receive power from the dedicated diesel generator.

- Establishment of dedicated DC and AC power sources. A dedicated 125 VDC source will be used for operation of selected circuit breakers and valve control circuits while a UPS will supply 120-V AC source for shutdown-related instrumentation.

The switchgear allocation and DC power supply capacity associated with the dedicated shutdown diesel generator power feed have been sized to support the shutdown-related loads. The adequacy of the power supplies is supported by design calculations. No loads other than the equipment essential to shutdown operation are connected to the dedicated buses.

NRC Positions as Presented in Enclosure 2 of the Letter

1. Section III.G of Appendix R to 10 CFR Part 50 requires cabling for or associated with redundant safe shutdown systems necessary to achieve and maintain hot shutdown conditions be separated by fire barriers having a three-hour fire rating or equivalent protection (see Section III.G.2 of Appendix R). Therefore, if option III.G.3 is chosen for the protection of shutdown capability cabling required for or associated with the alternative method of hot shutdown for each fire area, must be physically separated by the equivalent of a three-hour rated fire barrier from the fire area.

   In evaluating alternative shutdown methods, associated circuits are circuits that could prevent operation or cause maloperation of the alternative train which is used to achieve and maintain hot shutdown condition due to fire induced hot shorts, open circuits or shorts to ground.

   Safety-related and nonsafety-related cables that are associated with the equipment and cables of the alternative, or dedicated method of shutdown are those that have a separation from the fire area less than that required by Section III.G.2 of Appendix R to 10 CFR 50 and have either (1) a common power source with the alternate shutdown equipment and the power source is not electrically protected from the post-fire shutdown circuit of concern by coordinated circuit breakers, fuses or similar devices, (2) a connection to circuits of equipment whose spurious operation will adversely affect the shutdown capability, e.g., RHR/RCS Isolation Valves, or (3) a common enclosure, e.g., raceway, panel, junction box, with alternative shutdown cables and are not electrically protected from the post-fire shutdown circuits of concern by circuit breakers, fuses or similar devices.

   For each fire area where an alternative or dedicated shutdown method, in accordance with Section III.G.3 of Appendix R to 10 CFR Part 50, is provided by proposed modifications, the following information is required to demonstrate that associated

circuits will not prevent operation or cause maloperation of the alternative or dedicated shutdown method:

A. Provide a table that lists all equipment including instrumentation and support system equipment that are required by the alternative or dedicated method of achieving and maintaining hot shutdown.

RESPONSE

This information requested is enclosed in this submittal as Table 1 in the response to Enclosure 1, Question 8(a), which provides a listing of the functions and components required for achieving and maintaining cold shutdown using the alternative shutdown mode.

B. For each alternative shutdown equipment listed in 1.A above, provide a table that lists the essential cables (instrumentation, control, and power) that are located in the fire area.

RESPONSE

As stated in the response to Enclosure 1, Question 8(b), the dedicated shutdown modification has been completed for the hot-standby capability and the cable routings are identified on the drawings listed on Table 2. The equipment and instrumentation to be utilized for alternative shutdown (both hot-standby and cold shutdown) are listed on Tables 3 and 4. Although the cable routings for the cold shutdown related cables are conceptual at this time, Table 4 identifies the principal zones that will be occupied by the alternative/dedicated shutdown cables.

The routing of these circuits, coupled with other plant modifications, will eliminate the exposure to common high-hazard fire areas or will provide adequate spatial separation or rated fire barriers between cables serving normal and alternative devices.

The fire protection concept provided for both the hot-standby and cold shutdown system cables is to provide electrical separation by employing a dedicated power source and spatial separation by utilizing alternative fire zone routing. Where separate fire

zones are not available, appropriate fire barrier separation in accordance with 10 CFR 50 Appendix R, Section III G requirements are provided.

C. Provide a table that lists safety-related and nonsafety-related cables associated with the equipment and cables constituting the alternative or dedicated method of shutdown that are located in the fire area.

RESPONSE

The enclosed Table 5 provides a listing of the alternative shutdown components, their power connection, wiring by fire zone, type of electrical isolation provided, and the common fire zones shared by normal shutdown equipment and wiring. The alternative shutdown circuits are currently installed for hot-standby and will be routed for cold shutdown in separate conduit, with appropriate electrical isolation at any of the alternative shutdown/normal shutdown circuit interfaces. By establishing complete physical separation with fire barriers and isolation in this manner, the cables employed for the alternative shutdown equipment are not classified as associated circuits to other normal plant circuits.

D. Show that fire-induced failures of the cables listed in B and C above will not prevent operation or cause maloperation of the alternative or dedicated shutdown method.

RESPONSE

Any fire-induced failures of normal control and power circuits or circuits associated with the alternative shutdown cables, power supplies, or equipment will not adversely affect the shutdown operation, as a result of the following design criteria:

1. When operating in the alternative shutdown mode, essential components will utilize AC and DC power supplies that are independent of the normal distribution systems. Only circuits required for safe-shutdown operation interface with these power sources; failures of any circuits associated with the normal distribution system will have no effect on the alternative shutdown circuits.

2. Circuits required for the alternative shutdown operation will be rerouted as indicated to avoid high-hazard fire zones occupied by normal shutdown circuits. Circuits will be rerouted in conduit, which will contain only alternative shutdown circuits. Consequently, the alternative shutdown circuits will be routed independently of all other plant circuits.

3. All interfaces between normal and alternative shutdown circuits will be provided with electrical isolation. The isolation concepts are described in the response to Question 8(e) of Enclosure 1.

E. For each cable listed in 1.B above, provide detailed electrical schematic drawings that show how each cable is isolated from the fire area.

RESPONSE

The dedicated shutdown system modification is not yet at the detailed design stage for cold shutdown capability; consequently, detailed electrical schematic drawings are not available. However, the isolation concepts that will be applied for the alternative shutdown cables are described in the response to Question 8(e) of Enclosure 1. Hot-standby modifications completed to date are described by the reference drawings listed on Table 2. Copies of these drawings are available as a separate enclosure. The conceptual schematic/block diagram illustrating the isolation concepts is presented as Figure 8 (see response to Question 8(e) of Enclosure 1). This diagram identifies the principal isolation components and their locations. Although Figure 8 only illustrates the isolation scheme for a motor-operated valve, the same concepts will be applied to protect alternative/dedicated shutdown circuits for pumps, circuit breakers, and other components, as required.

NRC Position

2. The residual heat removal system is generally a low pressure system that interfaces with the high pressure primary coolant system. To preclude a LOCA through this interface, we require compliance with the recommendations of Branch Technical Position RSB 5-1. Thus, this interface most likely consists of two redundant and independent motor-operated valves. These two motor-operated valves and

their associated cable may be subject to a single fire hazard. It is our concern that this single fire could cause the two valves to open resulting in a fire-initiated LOCA through the subject high-low pressure interface. To assure that this interface and other high-low pressure interfaces are adequately protected from the effects of a single fire, we require the following information:

A. Identify each high-low pressure interface that uses redundant electrically controlled devices (such as two series motor operated valves) to isolate or preclude rupture of any primary coolant boundary.

RESPONSE

The following interfaces with the primary coolant system utilize redundant electrically controlled devices to isolate the pressure boundary:

1. Residual heat removal system suction line valves V-750 and V-751 comprise a motor-operated valve pair (in series).

2. Pressurizer PORVs and associated motor-operated block valves: PCV-455C/V-536, PCV-456/V-535

3. Chemical and volume control system letdown line utilizes multiple air-operated valves (fail closed on loss of air) and valves V-460A and 460B are a motor-operated valve pair (in series).

4. Reactor head vent discharge line to containment or quench tank has solenoid valves 572 and 571 respectively in series with solenoid valves 567 and 568 which are in parallel. The pressurizer vent utilizes the same solenoid valves 572 and 571 in series with solenoid valves 569 and 570 which are in parallel.

B. Identify the device's essential cabling (power and control) and describe the cable routing (by fire area) from source to termination.

RESPONSE

1. Residual Heat Removal System - Valves V-750, V-751

The control circuits for these valves have common routing in the control room, cable spread room, emergency switchgear room, auxiliary building hallway pipe alley, cable vault, and containment cable penetration and routing areas. The power circuits have common routing in the auxiliary building pipe alley, cable vault and containment cable penetration areas.

2. Pressurizer PORVs PCV-455C, PCV-456C and Block Valves V-535, V-536

The control power circuits for the PORVs and block valves have common routing in the control room, cable spreading room, emergency switchgear room, auxiliary building pipe alley, cable vault and containment cable penetration areas.

3. Chemical and Volume Control System Letdown Line

The valves associated with this system have essentially the same routing as described in (2) above.

4. Reactor Head Vent and Pressurizer Vent Liners

The valves associated with these systems have essentially the same routing as described in (2) above.

C. Identify each location where the identified cables are separated by less than a wall having a 3-hour fire rating from cables for the redundant device.

RESPONSE

Cables associated with the redundant RHR, pressurizer PORV and block, letdown, and vent system valve pairs are routed through a number of common fire zones. Where redundant cables are routed through common zones, they are generally not separated by a 3-hour-fire barrier. The areas of exposure to common fire hazards for each redundant valve pair are possible in each of the fire areas identified in (2-B) above.

D. For the areas identified in item 2c above (if any), provide the bases and justification as to the acceptability of the existing design or any proposed modifications.

RESPONSE

1. RHR Valves V-750 and 751

The RHR function is not required to achieve hot-standby; consequently, there is no requirement (based on time response restrictions) to control the RHR system from a central shutdown control panel. The RHR may be aligned using manual operation of valves (V-750 and 751) that are normally operated using electrical actuators.

It is recognized that rerouting of redundant circuits to avoid common fire zones or installation of barriers will not provide the required separation in all areas. The zone containing the valves will necessarily remain a vulnerable location, because of the physical proximity of the redundant valves, exposing cables, and valve actuators to a common fire hazard. As a result, the circuits for one valve in the pair will be modified so that AC power is removed under normal plant operating conditions. By removing AC power, no postulated fire-induced circuit faults can cause the normally closed valve to spuriously open.

2. Pressurizer PORVs and Block Valves (V-536, PCV-455C, V-535, and PCV-456)

The pressurizer relief block valves (V-535, V-536) are operated as normally open, motor operated valves. In the event that the associated PORV is spuriously opened by a fire-induced event, the block valve would require AC power to close the relief path. Removal of power and/or loss of air supply will cause PORVs to fail closed. The physical proximity of the valves, and exposure (of cables and actuators) to common fire hazards makes manual operation unreliable in the event of a fire in a critical fire zone. In addition, the motor-operated block valves are generally inaccessible for direct manual operation. To ensure that both pressurizer relief paths can be secured when required, the following modifications will be made:

- Reroute critical actuation circuits for valves 535 and 536 in separate conduit (downstream of disconnect switches) as required to avoid exposure

to potential fire-induced "hot shorts" to other circuits. In addition, a transfer switch scheme will provide power from the DS-MCC when normal plant power is unavailable.

- Provide remote status (position) indicators for both PORVs on the charging pump room panel.

- Provide for remote control of valves 535 and 536 for primary system pressure reduction at the dedicated shutdown panel in the charging pump room. These actuation circuits will be activated through a control transfer switch, and will be normally de-energized. The criteria and approach to ensure control circuit isolation will be as described for Question 1-8(e).

3. Letdown Orifice Valves V-200A, V-200B, V-200C, and Letdown Line Valves V-460A, V-460B, V-204A, and V-204B

The letdown system valves are designed to fail closed on loss of instrument air or control power. However, in the event of a fire in a critical fire zone, any or all of these valves may be spuriously actuated. If one or more of the letdown orifice isolation valves (V-200A, V-200B, V-200C) is spuriously opened while V-204A and V-204B are closed, a release may occur through RV-203. To control this possible release isolation valve 460A will be provided with alternative power and control by utilizing a transfer switch scheme. Valve 200A, a letdown orifice valve will also be provided with alternative power and control. The following modifications to the V-200A and V-460A actuation circuits will be made:

- Provide remote control switches (at the charging pump room shutdown panel) to permit control of valves V-460A and V-200A for shutdown to cold shutdown. Control circuit isolation described in 1-8(e) will be provided.

- Provide transfer of power from normal plant power to dedicated power source using a transfer switch scheme to ensure isolation, annunciation, etc.

- Reroute critical actuation circuits for valves V-200A and V-460A in separate conduit (downstream of disconnect switches) as required to avoid exposure to potential fire-induced "hot shorts" to other circuits.

- Manual operation of remaining letdown valves to an open condition will be conducted prior to beginning cooldown to cold shutdown status from the hot-standby condition.

Table 5. Alternative Shutdown Equipment Associated Circuits

Dedicated Shutdown Component	Power Supply & Control Power	Wiring by Fire Zone	Isolation Provided	Alternate Equipment/Wiring Common Zones
Letdown System				
Valves				
LCV 460A	DP	Zones 24,10,28,4,TB	Switch to new controller--DS power	28,24
LCV 460B	MO	NA	Disconnect from power panel	NA
200A	DP	Zones 25,24,10,28,4,TB,13	Switch power to DS bus	25,24,28
204A and B	MO	NA	Disconnect from power panel	NA
PCV 145	MO	NA	Disconnect from power panel	NA
TCV 143	MO	NA	Disconnect from power panel	NA
LCV 115A	MO	NA	Disconnect from power panel	NA
Vol. control tank Level sensor/ind.	DP	Zones 4,15,TB	Power from DS bus	15
535,536	DP	Zones 25,24,10,28,4,13	Power from DS bus	25,24,28,13
Steam & Feedwater Systems				
Steam driven FWP Aux. oil pump	DP	Zone TB	Power from DS bus, control-at TB	NA
Valves				
V2-14A	DP#	Zone TB	Switch disconnect from MCC 10 to DS bus	NA
V2-14B	DP	Zone TB	Switch disconnect from MCC 9 to DS bus	NA
V2-14C	DP	Zone TB	Switch disconnect from MCC 9 to DS bus	NA
V2-6A,B,C	MO	NA	Disconnect from MCC 10,9,9	NA
FCV 478	MO	NA	Disconnect from power panel	NA
FCV 479	MO	NA	Disconnect from power panel	NA
FCV 488	MO	NA	Disconnect from power panel	NA
FCV 489	MO	NA	Disconnect from power panel	NA
FCV 498	MO	NA	Disconnect from power panel	NA
FCV 499	MO	NA	Disconnect from power panel	NA
RV1-1	DP#	Zone TB	Switch disconnect at turbine deck panel	NA
RV1-2	DP#	Zone TB	Switch disconnect at turbine deck panel	NA
RV1-3	DP#	Zone TB	Switch disconnect at turbine deck panel	NA
V1-8A	DP#	Zone TB	Switch MCC 5 to DS bus	NA
V1-8B	DP	Zone TB	Switch MCC 6 to DS bus	NA
V1-8C	DP	Zone TB	Switch MCC 6 to DS bus	NA
RCS-Hot & Cold Leg Temp Loop 1	DP##	Zones 25,24,10,28,TB	Power from DS bus	25,24,28
RCS-Hot & Cold Leg Temp Loop 2	DP	Zones 25,24,10,28,TB	Power from DS bus	25,24,28
RCS-Hot & Cold Leg Temp Loop 3	DP	Zones 25,24,10,28,TB	Power from DS bus	25,24,28
Condensate Tank Level	DP#	Zones 4,28,TB	Power from DS bus	NA
Steam Gen. Level No. 1	DP#	Zones 24,25,10,4,28,TB	Power from DS bus	25,24,28
Steam Gen. Level No. 2	DP#	Zones 24,25,10,4,28,TB	Power from DS bus	25,24,28
Steam Gen. Level No. 3	DP#	Zones 24,25,10,4,28,TB	Power from DS bus	25,24,28

Table 5. Alternative Shutdown Equipment Associated Circuits (Continued)

Dedicated Shutdown Component	Power Supply & Control Power	Wiring by Fire Zone	Isolation Provided	Alternate Equipment/Wiring Common Zones
Charging System				
Charging Pump A	DP#	Zones 4,28,WH,TB	Isolated to control room by fuses power supplied by DS bus	NA
Boric Acid Pump A	DP	Zones 5,13,4,TB	Switch power from E1 to DS bus	NA
Boric Acid Heat Trace A	DP	Zones 5,TB,13	Switch power from MCC 5 to DS bus	NA
Boric Acid Tank A Htr.	DP	Zones 5,TB,13	Switch power from MCC 5 to DS bus	NA
Valves				
LCV 115C	MO	NA	Disconnect from power panel	NA
HCV 121	MO	NA	Disconnect from power panel	NA
HCV 110	MO	NA	Disconnect from power panel	NA
311	DP	Zones 4,28,10,24,25,13	Switch from power panel to DS power	28,24,25
310 A&B	MO	NA	Disconnect from power panel	NA
FCV 113A	MO	NA	Disconnect from power panel	NA
865 A&B&C	MO	NA	Disconnect from power panel	NA
350	MO	NA	Disconnect from MCC 5	NA
Pressurizer Pressure	DP#	Zones 25,24,10,28,4	Power from DS bus	25,24,28
Pressurizer Level	DP#	Zones 25,24,10,28,4	Power from DS bus	25,24,28
Pressurizer Heater Group	DP	Zones 25,24,TB,9,13,28	Power from DS bus	24,24
Incore Temp. Mon. Sys.	DP	Zones 25,24,10,28,4	Power from DS bus; readout in chg. pump room	NA
RHR System				
RHR Pump A	DP	Zones 27,TB	Power from DS bus	27
Valves				
863A&B	MO	NA	Disconnect power at MCC 5 & 6	NA
HCV 758	MO	NA	Local air power	NA
861 A&B	MO	NA	Disconnect from MCC 5 & 6	NA
860 A&B	MO	NA	Disconnect	NA
750	MO	NA	Disconnect from MCC 5	NA
751	MO	NA	Disconnect from MCC 6	NA
862A	MO	NA	Disconnect from MCC 5	NA
864B	MO	NA	Disconnect from MCC 5	NA
744A	MO	NA	Disconnect from MCC 5	NA
759A	MO	NA	Disconnect from MCC 5	NA
FCV 605	MO	NA	Local air power	NA
RHR Flow	DP	Zones 28,4,TB	Power from DS bus; readout in chg. pump room	28
Reactivity Monitor				
Neutron Mon. NPI	DP#	Zones 4,10,28,TB.24.25	Power from DS bus; located Zone 10; readout in chg. pump room.	24,25,28

Table 5. Alternative Shutdown Equipment Associated Circuits (Continued)

Dedicated Shutdown Component	Power Supply & Control Power	Wiring by Fire Zone	Isolation Provided	Alternate Equipment/Wiring Common Zones
Component Cooling Water System				
Pump A	DP#	Zones 4,5,12,TB	Isolated to control room by fuses; power from DS bus	5
Valve 749A	MO	NA	Disconnect from MCC 5	NA
Service Water System				
Pump D	DP#	Zones 4,5,12,28,TB,IS	Isolated to control room by fuses; power from DS bus	12,IS
Valve V6-12D	DP##	Zones 5,12,28,TB,WH	Isolated to control room by fuses	12,IS
Instrument Air System				
Primary Air Compressor	DP	Zone TB	Control from TB	NA
Valve PCV 1716	MO	NA	Disconnect from power panel	NA
HVAC System				
HVH-8A Fan - RHR PT	DP	Zone 27	Rewire if required	NA
HVS-1 Fan - Aux bldg	DP	Zones 15,16,TB	Switch from MCC 5 to DS bus	15
Plant Power				
DS-Bus	DP#	Zone TB	Power from DS diesel generator	NA

Legend

DP - Dedicated shutdown power
MO - Manual operation
NA - Not applicable
DS - Dedicated shutdown
TB - Turbine building
IS - Intake structure
- Hot shutdown modification completed
- Hot shutdown modification completed but change will be made.