Xcel Energy®

Monticello Nuclear Generating Plant
2807 W County Road 75
Monticello, MN 55362

June 17, 2014

L-MT-14-036
10 CFR 50.90

U. S. Nuclear Regulatory Commission
ATTN: Document Control Desk
Washington, DC 20555-0001

Monticello Nuclear Generating Plant
Docket No. 50-263
Renewed Facility Operating License No. DPR-22

License Amendment Request to Revise Technical Specification Surveillance Requirement 3.5.1.3.b to Correct the Alternate Nitrogen System Pressure

Pursuant to 10 CFR 50.90, Northern States Power Company, a Minnesota corporation (NSPM), doing business as Xcel Energy, hereby requests an amendment to the Technical Specifications (TS) for the Monticello Nuclear Generating Plant (MNGP) Renewed Operating License DPR-22. The proposed change would revise MNGP TS Surveillance Requirement 3.5.1.3.b to state that the MNGP Alternate Nitrogen System required pressure for operability is ≥ 700 psig rather than the ≥ 410 psig currently stated in the TS Surveillance Requirement.

NSPM has determined that the current MNGP TS value for the Alternate Nitrogen System is non-conservative and that the guidance of Nuclear Regulatory Commission (NRC) Administrative Letter, 98-10, "Dispositioning of Technical Specifications That Are Insufficient to Assure Plant Safety," applies. Based on this, NSPM has implemented administrative controls to maintain the Alternate Nitrogen System pressure at ≥ 700 psig, and is submitting this License Amendment Request (LAR) to address the nonconformance.

Enclosure 1 provides NSPM's evaluation of the proposed change. Attachment 1 to Enclosure 1 provides Figure 1, which is a sketch of the basic Alternate Nitrogen System configuration, for information only. Attachment 2 to Enclosure 1 provides the marked-up MNGP TS page. Attachment 3 to Enclosure 1 provides the re-typed MNGP TS page. Attachment 4 to Enclosure 1 provides the marked-up MNGP TS Bases pages, which are being provided for information only.

NSPM notes that a recent issue questioned the categorization of nitrogen bottle replacement as a cold shutdown repair per 10 CFR 50, Appendix R, when nitrogen is used for Safety Relief Valve (SRV) operation during hot shutdown. The Appendix R issue has been entered into the site CAP. Multiple potential solutions have been identified to resolve the cold shutdown repair issue. The potential solutions require

further study by NSPM before a final resolution is selected; therefore, final resolution of the Appendix R issue is not expected in the near term. Final resolution of the Appendix R issue may or may not result in design changes to the Alternate Nitrogen System. NSPM considers it prudent to expeditiously correct the non-conservative TS SR for the Alternate Nitrogen System while resolution is under development for the Appendix R issue. Therefore, NSPM is submitting this LAR to address the non-conservative TS SR in a timely manner per the Administrative Letter.

NSPM evaluated the proposed change in accordance with 10 CFR 50.92 and concluded the change involves no significant hazard consideration. Additionally, NSPM has determined the proposed change does not authorize a significant change in the types or totals amounts of effluent release or result in any significant increase in individual or cumulative occupational radiation exposure. Therefore, the proposed amendment meets the categorical exclusion requirements of 10 CFR 51.22(c)(9) and an environmental impact assessment need not be prepared. In accordance with 10 CFR 50.91(b)(1), a copy of this application, with enclosure, is being provided to the designated Minnesota Official. The MNGP Plant Operations Review Committee has reviewed this application.

NSPM requests approval of the proposed amendment by June 16, 2015. Once approved, the amendment will be implemented within 30 days.

Please contact Rick Loeffler at (763) 295-1247 if there are any questions regarding this letter.

Summary of Commitments

This letter proposes no new commitments and does not revise any existing commitments.

I declare under penalty of perjury that the foregoing is true and correct.

Executed on June 17, 2014.

Karen D. Fili
Site Vice President Monticello Nuclear Generating Plant
Northern States Power Company – Minnesota

cc: Administrator, Region III, USNRC
Project Manager, Monticello Nuclear Generating Plant, USNRC
Resident Inspector, Monticello Nuclear Generating Plant, USNRC
Minnesota Department of Commerce

ENCLOSURE 1

MONTICELLO NUCLEAR GENERATING PLANT

Evaluation of the Proposed Change

License Amendment Request to Revise Technical Specification Surveillance Requirement 3.5.1.3.b to Correct the Alternate Nitrogen System Pressure

ATTACHMENTS:
1. Figure 1 - Alternate Nitrogen System (Provided for Information Only)
2. Marked-Up Technical Specification Page
3. Retyped Technical Specification Page
4. Marked-Up Technical Specification Bases Pages (Provided for Information Only)

1.0 SUMMARY DESCRIPTION

Northern States Power Company, a Minnesota corporation, doing business as Xcel Energy (hereafter "NSPM"), proposes an amendment to the Technical Specifications (TS) for the Monticello Nuclear Generating Plant (MNGP) Renewed Operating License DPR-22. A revision is proposed to the MNGP TS Surveillance Requirement (SR) 3.5.1.3.b to state that the MNGP Alternate Nitrogen System required pressure for operability is ≥ 700 psig rather than the ≥ 410 psig currently stated in the TS Surveillance Requirement.

2.0 DETAILED DESCRIPTION

2.1 Proposed Changes

NSPM proposes a revision to a SR of TS 3.5.1, "ECCS (Emergency Core Cooling System) – Operating," to correct the requirements for the Alternate Nitrogen System pressure. TS SR 3.5.1.3 requires verification of limits for Automatic Depressurization System (ADS) pneumatic pressure for both of the required ADS pneumatic supplies. This proposed change would specifically revise the MNGP TS SR 3.5.1.3.b pressure limit for determining operability of the Alternate Nitrogen System from ≥ 410 psig to the corrected value of ≥ 700 psig.

2.2 Reason for Proposed Changes

NSPM has determined that the current MNGP TS value for the Alternate Nitrogen System is non-conservative. This non-conservatism exists based on non-conservative errors and deficiencies identified in the calculation that supports the Alternate Nitrogen System operability. The non-conservatisms and deficiencies were captured and entered into the site Corrective Action Program (CAP). A revision of the calculation that supports the Alternate Nitrogen System Operability Leakage Criteria has been completed and supports changing the pressure limit for determining operability from ≥ 410 psig to ≥ 700 psig. Additionally, NSPM determined that the guidance of Nuclear Regulatory Commission (NRC) Administrative Letter, 98-10, "Dispositioning of Technical Specifications that are Insufficient to Assure Plant Safety," applies to the nonconformance. NSPM has implemented administrative controls to maintain the Alternate Nitrogen System pressure ≥ 700 psig. NSPM is submitting this License Amendment Request (LAR) to address the nonconformance.

3.0 TECHNICAL EVALUATION

3.1 Alternate Nitrogen System Background

In response to NUREG-0737 Item II.K.3.28 that required a long term (100 day) post-accident depressurization capability to assure long term shutdown cooling operability,

NSPM created a tie-in with nitrogen bottles to the existing air supply to two SRVs to meet the requirements. Later modifications to the system provided two separate and independent safety-related nitrogen supply trains to the primary containment purge and vent valves and to the reactor building to torus vacuum breaker valves (to maintain containment integrity). The modification included a supply to the hard pipe vent system. Additional modifications revised the Alternate Nitrogen System to provide a safety related backup pneumatic supply for six of the eight SRVs and all of the inboard Main Steam Isolation Valves (MSIV).

3.2 Current Alternate Nitrogen System Description Summary

A safety-related Alternate Nitrogen System provides an alternate pressure source to equipment required during or following an accident. The Alternate Nitrogen System was designed as a long-term, safety-related backup to the normal non-safety related pneumatic supplies (i.e., the Instrument Air and Instrument Nitrogen Systems). The plant instrument air and nitrogen systems are described in USAR 10.3.4 (Reference 1). The Alternate Nitrogen System consists of two separate safety-related trains supplied from separate nitrogen bottle racks located in the Turbine Building. The location of the bottle racks permits replacement of nitrogen bottles to maintain the nitrogen pressure during normal operation and following an accident.

The Alternate Nitrogen System supplies the following major components:

- The T-ring seals of the Primary Containment and Atmospheric Control System purge and vent valves and the T-ring seals and actuators of the Reactor Building to Torus vacuum breakers.
- Six of the eight SRVs.
- The inboard MSIVs.
- The Hard Pipe Vent System isolation valves and rupture disc.

Train A of the Alternate Nitrogen System provides backup pneumatic supply to the T-ring seals of the inboard Primary Containment Atmospheric Control System purge and vent valves, the T-ring seals and actuators of the Reactor Building suppression chamber vacuum breakers and SRVs A, B, and E. Train B of the Alternate Nitrogen System provides backup pneumatic supply to the T-ring seals of the outboard Primary Containment Atmospheric Control System purge and vent valves, the inboard MSIVs, and SRVs C, F, and H. Train B also provides the sole pneumatic supply to the Primary Containment Hard Pipe Vent System. In each Alternate Nitrogen System train, one SRV is assigned to perform the Automatic Depressurization System (ADS) function, a different SRV performs the low-low set (LLS) function, and another SRV is available to perform alternate shutdown and manual depressurization functions. One ADS SRV and one LLS SRV have an associated accumulator bank that provides pneumatic pressure for valve actuation. Figure 1 in Attachment 1 shows the basic Alternate Nitrogen System configuration.

The bottled nitrogen supply racks used for the Alternate Nitrogen System are manually checked for adequate supply and pressure during plant operation at a frequency to assure minimum design capacity requirements of the system will be met, assuming worst case leakage rates.

3.3 Current Licensing Basis/Current Licensing Basis Acceptance Criteria

Current Technical Specification (TS) SR 3.5.1.3.b requires verification every 31 days that each Alternate Nitrogen System supply pressure is ≥ 410 psig. This LAR proposes changing the required supply pressure in TS SR 3.5.1.3.b from ≥ 410 psig to ≥ 700 psig. The SR ensures there is adequate supply pressure for reliable ADS operation. The design pneumatic supply pressure requirements for the Alternate Nitrogen System trains are such that following a failure of the normal pneumatic supply to the ADS SRVs supplied by the Alternate Nitrogen System, at least five valve actuations can occur in a 10 hour period. Each Alternate Nitrogen System train supplies one ADS valve. An accumulator bank supplies the remaining ADS valve, of which the supply pressure is verified by TS SR 3.5.1.3.a. All three ADS valves are required to cycle in response to a Loss of Coolant Accident (LOCA).

3.4 Alternate Nitrogen System Bottle Pressure Calculation Summary

The calculation for the Alternate Nitrogen System supply pressure was revised to correct non-conservative errors and deficiencies that were identified and entered into the site CAP. The required pressure in the bottles in the Alternate Nitrogen System bottle racks was calculated using the Ideal Gas Law. A compressibility factor was used to modify the Ideal Gas Law for high pressures.

To determine the required nitrogen bottle pressure, the volume of gas required to operate the equipment served (i.e., the Alternate Nitrogen System loads) was added to the volume of nitrogen remaining in the bottle at the minimum bottle pressure. As stated in Section 3.2 above, the Alternate Nitrogen System is composed of an A and B Train. The calculation determines the volume of nitrogen required to actuate all Alternate Nitrogen System Train B required loads. The calculation does not determine the Alternate Nitrogen System Train A loads as the Train B loads are bounding. Train B loads consist of one ADS SRV, one LLS SRV, one manually operated SRV, four inboard MSIVs, three T-ring seals on the Containment Purge and Vent Valves, and the hard piped vent system. The load for the one manually operated SRV and the Hard Pipe Vent are not considered in the calculation for determining the TS SR value as they are not actuated to satisfy the TS Requirement. The Alternate Nitrogen System supply to the hard pipe vent is specifically not considered in the calculation as those components are normally manually isolated and would only be unisolated under beyond design basis conditions. Therefore, operation of the hard pipe vent system is not required to be assumed coincident with other accident or transient events and the load is excluded. Lastly, maximum system leakage in the Alternate Nitrogen System train over a 10 hour period was considered in the calculation.

In order to calculate the volumes of different loads, an isentropic expansion of the nitrogen as it exits the bottles was assumed. This is an appropriate assumption as the valves actuate rapidly allowing minimal time for heat transfer from the pressure boundary to the nitrogen. This is conservative to an isothermal expansion as it results in the lowest pressures in the affected portions of the AN2 systems. The lower the pressure in the AN2 system during operation of the equipment, the more mass that will initially flow from the AN2 tanks into the AN2 system. Therefore, the Ideal Gas equation for isentropic expansion of a gas was used to determine the minimum nitrogen temperature possible following the valve actuations.

The required Alternate Nitrogen System load volume is then added to the volume remaining in the nitrogen bottles at the time that the low pressure isolation occurs. Low pressure isolation occurs when system pressure decreases to 200 psig. The calculation assumes system isolation occurs at a conservative minimum pressure of 236 psig, which allows additional margin for instrument error. The unavailable volume of nitrogen remaining in a bottle at the minimum bottle pressure of 236 psig was determined to be 127.44 standard cubic feet (scf).

The calculated required nitrogen gas volumes to actuate equipment for the limiting train of the Alternate Nitrogen System are:

- Volume required to cycle one ADS SRV and one LLS SRV five times (10 cycles total) — 0.795 scf
- Volume required to seal T-ring seals after the purge and vent valves cycle once AND the volume required to close and seal the four inboard MSIVs — 43.42 scf
- Volume of leakage out of the Alternate Nitrogen System system over a 10 hour period — 150 scf
- Volume at minimum bottle pressure of 236 psig — 127.44 scf

Total Required Volume: 321.66 scf

To convert this volume to the minimum required bottle pressure with use of the ideal gas law, an iterative approach was taken to select the compressibility factor. A high and low pressure around the final value was selected to be applied to show that even though the pressure ratio varies, the compressibility factor remains the same. This ultimately determined that in order to satisfy the TS SR 3.5.1.3.b, the minimum Alternate Nitrogen System supply pressure must be greater than or equal to 700 psig.

3.5 Conclusions

Each Alternate Nitrogen System subsystem provides sufficient capacity at the minimum bottle pressure of 700 psig to supply all subsystem loads to meet design and safety

functions for the various equipment served. This includes actuating the ADS SRVs during a LOCA to depressurize the reactor vessel to permit low pressure ECCS injection. Each Alternate Nitrogen System provides sufficient volume to cycle the one ADS SRV five times while supplying the other loads on the system, without nitrogen bottle replacement.

4.0 REGULATORY ANALYSIS

4.1 Applicable Regulatory Requirements/Criteria

Title 10 Code of Federal Regulations 50.36(c)(3), Surveillance Requirements:

> "Surveillance requirements are requirements relating to test, calibration, or inspection to assure that the necessary quality of systems and components is maintained, that facility operation will be within safety limits, and that the limiting conditions for operation will be met."

Conclusion
The proposed change revises the system operability criteria for the Alternate Nitrogen System from ≥ 410 psig to ≥ 700 psig. This is a correction to the value for the operability criteria. The TS SR will continue to be in place and will be under administrative controls until this License Amendment Request is approved and implemented. Therefore, the TS SR will continue to assure that the pressure requirement for operability will be met.

4.2 Precedent

Nuclear Management Company (NMC), the predecessor to NSPM, submitted a request for revision of TS 3.5.1.3.b by letter dated January 30, 2007 (Reference 2). The request was to revise a non-conservative TS value for the Alternate Nitrogen System. The request for amendment was approved by NRC on February 21, 2008 (Reference 3).

4.3 No Significant Hazards Consideration Determination

In accordance with the requirements of 10 CFR 50.90, Northern States Power Company, a Minnesota corporation (NSPM), doing business as Xcel Energy, requests an amendment to the Technical Specifications (TS) for the Monticello Nuclear Generating Plant (MNGP) Renewed Operating License DPR-22. The proposed amendment would revise the MNGP TS Surveillance Requirement 3.5.1.3.b for the Alternate Nitrogen System required pressure for operability. NPSM has determined that the current MNGP TS value for the Alternate Nitrogen System is non-conservative and that the guidance of Nuclear Regulatory Commission (NRC) Administrative Letter 98-10, "Dispositioning of Technical Specifications that are Insufficient to Assure Plant Safety," applies. NSPM has implemented administrative controls to maintain Alternate

Nitrogen System pressure and is submitting this License Amendment Request to address this nonconformance.

NSPM has evaluated the proposed amendment against the standards in 10 CFR 50.92 and has determined that the operation of the MNGP in accordance with the proposed amendment presents no significant hazards. NSPM's evaluation against each of the criteria in 10 CFR 50.92 follows.

1. Does the proposed change involve a significant increase in the probability or consequences of an accident previously evaluated?

   Response: No.

   The proposed change revises the TS SR for the purpose of restoring a value to be consistent with the licensing basis. The proposed TS change does not introduce new equipment or new equipment operating modes, nor does the proposed change alter existing system relationships. The proposed change does not affect plant operation, design function or any analysis that verifies the capability of a system, structure or component (SSC) to perform a design function. Further, the proposed change does not increase the likelihood of the malfunction of any SSC or impact any analyzed accident. Consequently, the probability of an accident previously evaluated is not affected and there is no significant increase in the consequences of any accident previously evaluated.

   Therefore, the proposed change does not involve a significant increase in the probability or consequences of an accident previously evaluated.

2. Does the proposed change create the possibility of a new or different kind of accident from any accident previously evaluated?

   Response: No.

   The proposed change revises the TS SR for the purpose of restoring a value to be consistent with the licensing basis. The change does not involve a physical alteration of the plant (i.e., no new or different type of equipment will be installed) or a change in the methods governing normal plant operations. The proposed change does not alter assumptions made in the safety analysis for the components supplied by the Alternate Nitrogen System. Further, the proposed change does not introduce new accident initiators.

   Therefore, the proposed change does not create the possibility of a new or different kind of accident from any accident previously evaluated.

3. Does the proposed change involve a significant reduction in a margin of safety?

   Response: No.

   The proposed change revises the TS SR for the purpose of restoring a value to be consistent with the licensing basis. The proposed change does not alter the manner in which safety limits, limiting safety system settings, or limiting conditions for operation are determined. The safety analysis assumptions and acceptance criteria are not affected by this change.

   Therefore, the proposed change does not involve a significant reduction in a margin of safety.

Based on the above evaluation, the NSPM has determined that operation of the facility in accordance with the proposed change does not involve a significant hazards consideration as defined in 10 CFR 50.92(c), in that it does not: (1) involve a significant increase in the probability or consequences of an accident previously evaluated; (2) create the possibility of a new or different kind of accident from any accident previously evaluated; or (3) involve a significant reduction in a margin of safety.

5.0 ENVIRONMENTAL CONSIDERATION

NSPM has determined that the proposed change would revise a requirement with respect to installation or use of a facility or component located within the restricted area, as defined in 10 CFR 20, or would change an inspection or surveillance requirement. However, the proposed amendment does not involve (i) a significant hazards consideration, or (ii) authorize a significant change in the types or a significant increase in the amounts of any effluent that may be released offsite, or (iii) result in a significant increase in individual or cumulative occupational radiation exposure. Accordingly, the proposed amendment meets the eligibility criterion for a categorical exclusion set forth in 10 CFR 51.22(c)(9). Therefore, NSPM concludes that pursuant to 10 CFR 51.22(b), no environmental impact statement or environmental assessment needs to be prepared in connection with the proposed amendment.

6.0 REFERENCES

1. USAR Section10.3, Plant Auxiliary Systems.

2. Letter from NMC to NRC, "License Amendment Request to Revise Technical Specification Surveillance Requirement 3.5.1.3 to Correct the Alternate Nitrogen System Pressure," dated January 30, 2007 (ADAMS Accession No. ML070310516).

3. Letter from NRC to NMC, "Monticello Nuclear Generating Plant – Issuance of Amendment Re: Request to Revise Technical Specification Surveillance Requirement 3.5.1.3 to Correct the Alternate Nitrogen System Pressure (TAC No. MD4292," dated February 21, 2008 (ADAMS Accession No. ML080380638).

ATTACHMENT 1

MONTICELLO NUCLEAR GENERATING PLANT, UNIT 1

License Amendment Request to Revise Technical Specification Surveillance Requirement 3.5.1.3.b to Correct the Alternate Nitrogen System Pressure

Figure 1 - Alternate Nitrogen System
(Provided for Information Only)

(1 page to follow)

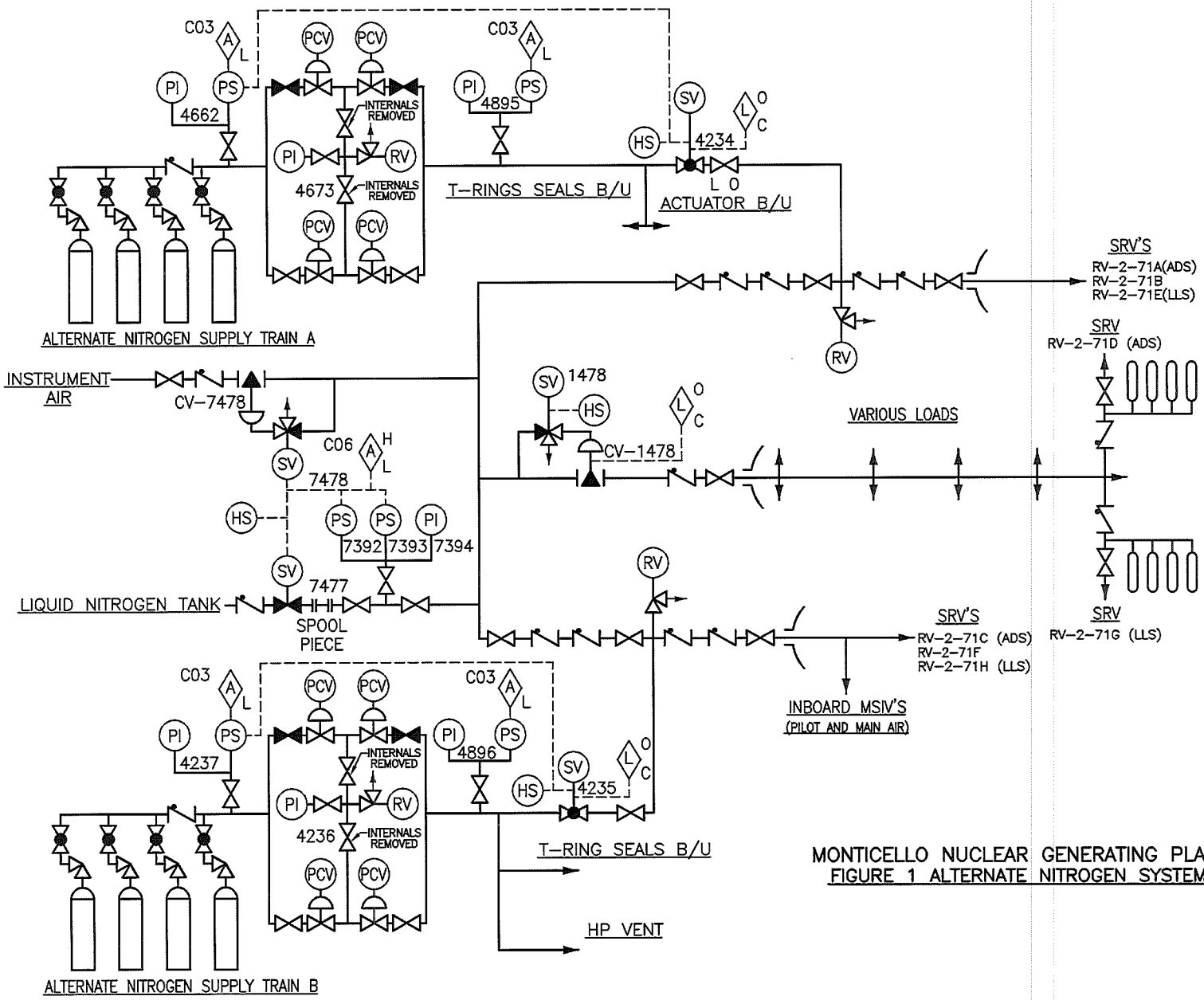

MONTICELLO NUCLEAR GENERATING PLANT
FIGURE 1 ALTERNATE NITROGEN SYSTEM

ATTACHMENT 2

MONTICELLO NUCLEAR GENERATING PLANT, UNIT 1

License Amendment Request to Revise Technical Specification Surveillance Requirement 3.5.1.3.b to Correct the Alternate Nitrogen System Pressure

MARKED-UP TECHNICAL SPECIFICATION PAGE

(1 page to follow)

SURVEILLANCE REQUIREMENTS

SURVEILLANCE		FREQUENCY
SR 3.5.1.1	Verify, for each low pressure ECCS injection/spray subsystem, the piping is filled with water from the pump discharge valve to the injection valve.	31 days
SR 3.5.1.2	Verify each ECCS injection/spray subsystem manual, power operated, and automatic valve in the flow path, that is not locked, sealed, or otherwise secured in position, is in the correct position.	31 days
SR 3.5.1.3	Verify ADS pneumatic pressure is as follows for each required ADS pneumatic supply: a. S/RV Accumulator Bank header pressure ≥ 88.3 psig; and b. Alternate Nitrogen System pressure is ≥ ~~410~~ 700 psig.	31 days
SR 3.5.1.4	----------NOTE---------- Only required to be met in MODE 1. ---------- Verify the RHR System intertie return line isolation valves are closed.	31 days
SR 3.5.1.5	Verify correct breaker alignment to the LPCI swing bus.	31 days
SR 3.5.1.6	Verify each recirculation pump discharge valve cycles through one complete cycle of full travel or is de-energized in the closed position.	In accordance with the Inservice Testing Program

ATTACHMENT 3

MONTICELLO NUCLEAR GENERATING PLANT, UNIT 1

License Amendment Request to Revise Technical Specification Surveillance Requirement 3.5.1.3.b to Correct the Alternate Nitrogen System Pressure

RETYPED TECHNICAL SPECIFICATION PAGE

(1 page to follow)

SURVEILLANCE REQUIREMENTS

SURVEILLANCE		FREQUENCY
SR 3.5.1.1	Verify, for each low pressure ECCS injection/spray subsystem, the piping is filled with water from the pump discharge valve to the injection valve.	31 days
SR 3.5.1.2	Verify each ECCS injection/spray subsystem manual, power operated, and automatic valve in the flow path, that is not locked, sealed, or otherwise secured in position, is in the correct position.	31 days
SR 3.5.1.3	Verify ADS pneumatic pressure is as follows for each required ADS pneumatic supply: a. S/RV Accumulator Bank header pressure ≥ 88.3 psig; and b. Alternate Nitrogen System pressure is ≥ 700 psig.	31 days
SR 3.5.1.4	----------NOTE---------- Only required to be met in MODE 1. ---------- Verify the RHR System intertie return line isolation valves are closed.	31 days
SR 3.5.1.5	Verify correct breaker alignment to the LPCI swing bus.	31 days
SR 3.5.1.6	Verify each recirculation pump discharge valve cycles through one complete cycle of full travel or is de-energized in the closed position.	In accordance with the Inservice Testing Program

ATTACHMENT 4

MONTICELLO NUCLEAR GENERATING PLANT, UNIT 1

License Amendment Request to Revise Technical Specification Surveillance Requirement 3.5.1.3.b to Correct the Alternate Nitrogen System Pressure

MARKED-UP TECHNICAL SPECIFICATION BASES PAGE
(Provided for Information Only)

(2 pages to follow)

BASES

SURVEILLANCE REQUIREMENTS

SR 3.5.1.1

The flow path piping has the potential to develop voids and pockets of entrained air. Maintaining the pump discharge lines of the CS System and LPCI subsystems full of water ensures that the ECCS will perform properly, injecting its full capacity into the RCS upon demand. This will also prevent a water hammer following an ECCS initiation signal. One acceptable method of ensuring that the lines are full is to vent at the high points. While the potential for developing voids in the HPCI System exists, the effects of a void have been analyzed and shown to be acceptable. The 31 day Frequency is based on the gradual nature of void buildup in the ECCS piping, the procedural controls governing system operation, and operating experience.

SR 3.5.1.2

Verifying the correct alignment for manual, power operated, and automatic valves in the ECCS flow paths provides assurance that the proper flow paths will exist for ECCS operation. This SR does not apply to valves that are locked, sealed, or otherwise secured in position since these were verified to be in the correct position prior to locking, sealing, or securing. A valve that receives an initiation signal is allowed to be in a nonaccident position provided the valve will automatically reposition in the proper stroke time. This SR does not require any testing or valve manipulation; rather, it involves verification that those valves capable of potentially being mispositioned are in the correct position. This SR does not apply to valves that cannot be inadvertently misaligned, such as check valves. For the HPCI System, this SR also includes the steam flow path for the turbine and the flow controller position.

The 31 day Frequency of this SR was derived from the Inservice Testing Program requirements for performing valve testing at least once every 92 days. The Frequency of 31 days is further justified because the valves are operated under procedural control and because improper valve position would only affect a single subsystem. This Frequency has been shown to be acceptable through operating experience.

SR 3.5.1.3

Verification every 31 days that each ADS pneumatic pressure is within the analysis limits (S/RV Accumulator Bank header pressure ≥ 88.3 psig and Alternate Nitrogen System supply (ALT N2 TRAIN A (or B) SUPPLY) pressure ≥ ~~410~~ 700 psig (Ref. 13)) ensures adequate pressure for reliable ADS operation. The supply associated with each ADS valve provides pneumatic pressure for valve actuation. The design pneumatic supply pressure requirements for the S/RV accumulator bank and Alternate

BASES

REFERENCES

1. USAR, Section 6.2.2.

2. USAR, Section 6.2.3.

3. USAR, Section 6.2.4.

4. USAR, Section 6.2.5.

5. USAR, Section 14.7.2.

6. USAR, Section 14.7.3.

7. 10 CFR 50, Appendix K.

8. USAR, Section 6.2.1.1.

9. 10 CFR 50.46.

10. USAR, Section 14.7.2.3.2.

11. Memorandum from R.L. Baer (NRC) to V. Stello, Jr. (NRC), "Recommended Interim Revisions to LCOs for ECCS Components," December 1, 1975.

12. USAR, Section 14.7.2.3.1.5.

Replace reference when proposed change is approved

13. ~~Amendment No. 155, "Issuance of Amendment Re: Request to Revise Technical Specification Surveillance Requirement 3.5.1.3 to Correct the Alternate Nitrogen System Pressure," dated February 21, 2008. (ADAMS Accession Nos. ML080380638 and ML080590541)~~

14. Amendment No. 162, "Issuance of Amendment Regarding Completion Time to Restore a Low-Pressure Emergency Core Cooling Subsystem to Operable Status," dated July 10, 2009. (ADAMS Accession No. ML091480782)

15. Amendment No. 168, "Issuance of Amendment Re: Testing of Main Steam Safety/Relief Valves," dated July 27, 2012. (ADAMS Accession No. ML12185A216)

16. ASME Operation and Maintenance (OM) Code.

17. Amendment No. 176, "Monticello Nuclear Generating Plant – Issuance of Amendment No. 176 to Renewed Facility Operating License Regarding Extended Power Uprate," (ADAMS Accession No. ML13316C459)