# Oconee Nuclear Station
# Units 1, 2 and 3

# ODCM

## Offsite Dose Calculation Manual

Duke Energy

**Oconee Nuclear Station**
**Units 1, 2 and 3**

# OFFSITE DOSE CALCULATION MANUAL (ODCM)

**Revision 54**

| | |
|---|---|
| **Prepared By: Christopher C. Courtenay/** **Fleet Scientific Services Radiation Protection** | / 10/9/13 |
| **Reviewed By: Eric T. Lampe/** **ONS Radiation Protection** | / 10/10/13<br>10/10/13 |
| **Approved By: Thomas D. Ray/** **ONS Station Manager** | Thomas D. Ray / 10/10/2013 |

# TABLE OF CONTENTS

**Executive Summary** . . . . . Executive Summary-1

**1.0 Radwaste Systems** . . . . . 1-1
1.0.1 Liquid Radwaste Processing . . . . . 1-1
1.0.2 Gaseous Radwaste Processing . . . . . 1-3

**2.0 Release Rate Calculations** . . . . . 2-1
2.0.1 Liquid Release Rate Limit Calculations . . . . . 2-1
2.0.1.1 Liquid Radwaste Effluent Line Release Rate Limit Calculation . . . 2-1
2.0.1.2 #3 Chemical Treatment Pond Effluent Line Discharge . . . . . 2-2
2.0.2 Gaseous Release Rate Limit Calculations . . . . . 2-5
2.0.2.1 Unit Vent Discharge Release Rate Limit Calculation . . . . . 2-5

**3.0 Setpoint Calculations** . . . . . 3-1
3.0.1 Liquid Radiation Monitor Setpoint Calculations . . . . . 3-1
3.0.2 Gaseous Radiation Monitor Setpoint Calculations . . . . . 3-5
3.0.2.1 Unit Vents Setpoints (RIA-45 and RIA-46) . . . . . 3-7
3.0.2.2 Radwaste Facility Setpoints (4RIA-45) . . . . . 3-8
3.0.2.3 Interim Radwaste Building Setpoints (RIA-53) . . . . . 3-9
3.0.2.4 Waste Gas Decay Tank Setpoints (RIA-37 and RIA-38) . . . . . 3-9

**4.0 Effluent Dose Models** . . . . . 4-1
4.0.1 Liquid Effluent Dose Model for the Maximum Exposed Individual . . . . 4-1
4.0.2 Gaseous Effluent Dose Model for the Maximum Exposed Individual . . . . 4-7
4.0.3 Direct Radiation . . . . . 4-23
4.0.4 Effluent Apportionment . . . . . 4-23

**5.0 Fuel Cycle Calculations** . . . . . 5-1
5.0.1 Milling . . . . . 5-1
5.0.2 Conversion . . . . . 5-1
5.0.3 Enrichment . . . . . 5-1
5.0.4 Fuel Fabrication . . . . . 5-1
5.0.5 Nuclear Power Production . . . . . 5-2
5.0.6 Fuel Reprocessing . . . . . 5-2
5.0.7 40CFR190 Total Dose Determination . . . . . 5-2

**6.0 Environmental Locations** . . . . . 6-1
6.0.1 Site Description and Sample Locations . . . . . 6-1
6.0.2 Land Use Census Data . . . . . 6-1
6.0.3 Oconee Meteorology: Relative Air Concentrations and Deposition . . . . 6-8
6.0.3.1 XOQDOQ Methodology and Assumptions . . . . . 6-8
6.0.3.2 Meteorological Data . . . . . 6-9
6.0.3.3 Annual XOQDOQ Comparison to the ODCM . . . . . 6-10

**7.0 Licensee Initiated Changes** . . . . . 7-1

## Appendices

Appendix A: Dose Factors for Exposure to a Semi-Infinite Cloud of Noble Gases . . . A-1
Appendix B: $P_i$ Dose Factors for use in the Gaseous Release Rate Limit Calculations . . . B-1
Appendix C: $A_i$ Adult Dose Factors for use in the Liquid Dose Calculations . . . . C-1
Appendix D: $A_i$ Teen Dose Factors for use in the Liquid Dose Calculations . . . . D-1
Appendix E: $A_i$ Child Dose Factors for use in the Liquid Dose Calculations . . . . E-1
Appendix F: $A_i$ Infant Dose Factors for use in the Liquid Dose Calculations . . . . F-1
Appendix G: $R_i$ Adult Dose Factors for use in the Gaseous Dose Calculations . . . . G-1
Appendix H: $R_i$ Teen Dose Factors for use in the Gaseous Dose Calculations . . . . H-1
Appendix I: $R_i$ Child Dose Factors for use in the Gaseous Dose Calculations . . . . I-1
Appendix J: $R_i$ Infant Dose Factors for use in the Gaseous Dose Calculations . . . . J-1

## LIST OF FIGURES

1.0-1 Liquid Radwaste System . . . . . 1-2
1.0-2 Gaseous Radwaste System (4 pages) . . . . . 1-4
2.0-1 Liquid Radwaste Discharge Locations . . . . . 2-4
6.0-1 Sampling Locations Map (Site Boundary) . . . . . 6-5
6.0-2 Sampling Locations Map (Ten Mile Radius) . . . . . 6-6
6.0-3 Land Use Census Map . . . . . 6-7

## LIST OF TABLES

3.0-1 RIA-33 Cs-137 Equivalents. . . . . 3-4
3.0-2 Xe-133 Equivalents . . . . . 3-11
6.0-1 Sampling Locations . . . . . 6-2
6.0-2 TLD Sites . . . . . 6-3
6.0-3 Land Use Census Results . . . . . 6-4
6.0-4 Terrain Heights Above ONS Yard Grade Elevation (m) . . . . . 6-9
6.0-5 ONS Atmospheric Stability Frequency (1988 - 1992) . . . . . 6-10
6.0-6 ONS Frequency of Wind Direction and Speed (1988 - 1992) . . . . . 6-10
6.0-7 ONS Limiting $\chi/Q$ and D/Q Values (1988-1992) . . . . . 6-11
6.0-8 ONS Delta-T Ranges per Vertical Separation Distances . . . . . 6-11
6.0-9 Oconee Semi-Elevated $\chi/Q$ and D/Q Average Values (1988-1992) . . . . . 6-12
6.0-10 Oconee Ground Level $\chi/Q$ and D/Q Average Values (1988-1992) . . . . . 6-14

# EXECUTIVE SUMMARY

The Oconee Nuclear Station (ONS) Offsite Dose Calculation Manual (ODCM) provides the methodology and parameters to be used in the calculation of offsite doses due to normal operation radioactive liquid and gaseous effluents to assure compliance with the dose limitations of the Selected Licensee Commitments (SLCs, UFSAR Chapter 16) and Technical Specifications (TSs). These dose limitations assure that:

(1) the concentration of radioactive liquid effluents released from the site to the unrestricted area will be limited to 10 times the effluent concentration (EC) levels of 10CFR20, Appendix B, Table 2, and 2.0E-04 µCi/ml for dissolved and entrained noble gases (TS 5.5.5(b), SLC 16.11.1(a)) ;

(2) the exposures to any individual member of the public from radioactive liquid effluents will not result in doses greater than the ALARA design objectives of 10CFR50, Appendix I or the 10CFR20 limits (TS 5.5.5(d), SLC 16.11.1(b)) ;

(3) the dose rate at any time at the site boundary from radioactive gaseous effluents will be limited to: for noble gases; less than or equal to 500 mrem/yr to the whole body, and less than or equal to 3000 mrem/yr to the skin; and for iodine-131 and iodine-133, for tritium, and for all radioactive materials in particulate form with half-lives greater than 8 days; less than or equal to 1500 mrem/yr to any organ (TS 5.5.5(g), SLC 16.11.2(a));

(4) the exposure to any individual member of the public from radioactive gaseous effluents will not result in doses greater than the ALARA design objectives of 10CFR50, Appendix I or the 10CFR20 limits (TS 5.5.5(h and i), SLC 16.11.2(b)); and

(5) the dose to any individual member of the public from the nuclear fuel cycle will not exceed the limits of 40CFR190 (TS 5.5.5(j), SLC 16.11.7).

The methodology and parameters used to assure compliance with the dose limitaions described above shall be used to prepare the radioactive liquid and gaseous effluent reports required by the SCLs and Technical Specifications. Dose calculations that demonstrate compliance with 40CFR190 will be considered to demonstrate compliance with 10CFR20 0.1-rem annual dose limit.

The ODCM also provides the methodology and parameters to be used in the calculation of radioactive liquid and gaseous effluent monitoring instrumentation alarm/trip setpoints to assure compliance with the concentration and dose rate limitations of the SLCs and Technical Specifications. Normally RETDAS, a computer code that implements NUREG-0133 methodology, is used for the calculation of offsite doses, but the ODCM also provides a method for the calculation of offsite doses when RETDAS is not available.

The ODCM has been prepared as generically as possible in order to minimize the need for revisions. However, some changes to the ODCM such as land-use census data are expected on an annual basis. Any changes to the methodology and parameters to be used in this ODCM shall be reviewed by knowledgeable individual(s), and approved by the Station Manager prior to implementation. Changes to the ODCM shall be submitted to the Nuclear Regulatory Commission in accordance with the SLCs and Technical Specifications.

The ODCM does not replace any station implementing procedures. Programmatic controls for radioactive effluents and radiological environmental monitoring are contained in the Administrative Controls chapter of the Technical Specifications. Procedural details for radioactive effluents and radiological environmental monitoring consisting of licensee commitments, applicability, remedial actions, surveillance requirements, and the bases for these requirements are contained in Section 16.11 of the SLCs.

# 1.0 RADWASTE SYSTEMS

## 1.0.1 LIQUID RADWASTE PROCESSING

The liquid radwaste system at Oconee Nuclear Station is used to collect and treat liquid chemical and radiochemical byproducts of unit operation. The system produces effluents that are discharged in small, dilute quantities to the environment. The means of treatment vary with waste type and desired product in the various systems:

(A) Filtration - Waste sources are filtered prior to processing as necessary.

(B) Ion Exchange - Ion exchange is used to remove radioactive ions from solution. Also, ion exchange is normally used in removing cations (cobalt, cesium, manganese) and anions (chloride, fluoride) from the filtrate in order to purify the filtrate for release.

(C) Gas Stripping - Removal of gaseous radioactive fission products is accomplished through venting of atmospheric holdup tanks.

Figure 1.0-1 is a schematic representation of the liquid radwaste system at Oconee.

## Figure 1.0-1 Oconee Nuclear Station Liquid Radwaste System

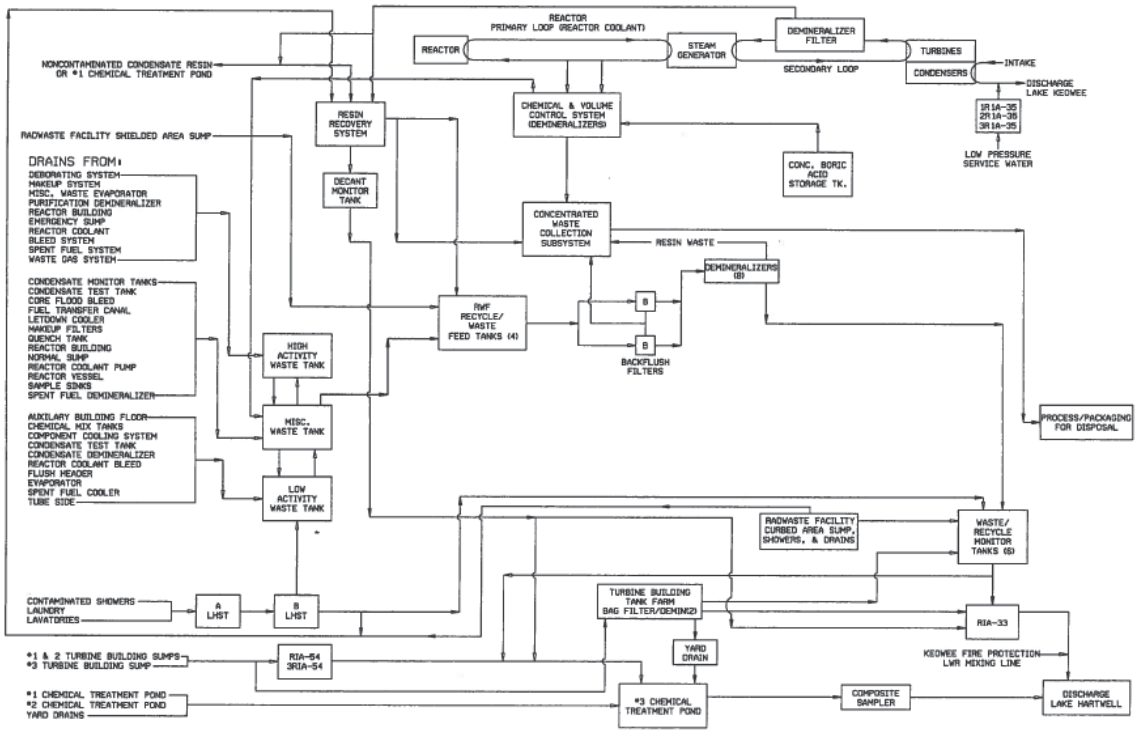

## 1.0.2 GASEOUS RADWASTE PROCESSING

The purpose of the gaseous waste disposal system is to:

(1) Maintain a non-oxidizing cover gas of nitrogen in tanks and equipment that contain potentially radioactive gas;

(2) Hold up radioactive gas for decay; and

(3) Release gases (radioactive and non-radioactive) to the atmosphere under controlled conditions.

During power operation of the facilities, radioactive materials released to the atmosphere in gaseous effluents include low concentrations of fission product noble gases (krypton and xenon), halogens (mostly iodines), tritium contained in water vapor, and particulate material including both fission products and activated corrosion products.

The primary source of gaseous radioactive wastes is from the degassing of the primary coolant during letdown of the cooling water into various holding tanks. Additional sources of gaseous waste activity include the auxiliary building exhaust, spent fuel area exhaust, the discharge from the steam jet air ejectors, and purging and venting of the reactor containment building. Some low radioactivity secondary system steam releases can occur at the site such as from infrequent lifts of the main steam relief valves and testing of the main steam manual atmospheric dump valves. Radioactivity released from secondary system steam releases is documented and included in the site effluent release total.

All components that can contain potentially radioactive gases are vented to a vent header. The vent gases are subsequently drawn from this header by one of four waste gas compressors or a waste gas exhauster. The waste gas compressor discharges through a waste gas separator to one of seven waste gas tanks. The waste gas tanks and the waste gas exhauster discharge to the unit vent after passing through a filter bank consisting of a prefilter, an absolute filter, and a charcoal filter.

Radioactive gases may be released inside the reactor containment building when components of the primary system are opened to the building atmosphere for operational reasons or where minor leaks occur in the primary system. Prior to access, the reactor containment atmosphere will be monitored for radioactivity and, when necessary, purged through prefilters, high-efficiency particulate air (HEPA) filters, and charcoal filters, and released to the atmosphere through the unit vent. The purge equipment is sized for a flow rate of 50,000 cfm providing approximately 1.5 air changes per hour in the reactor building. Units 1, 2, and 3 have a separate vent stack which services each unit.

Figure 1.0-2 is a schematic representation of the gaseous radwaste system at Oconee.

**Figure 1.0-2 Oconee Nuclear Station Gaseous Radwaste System**
**Page 1 of 4**

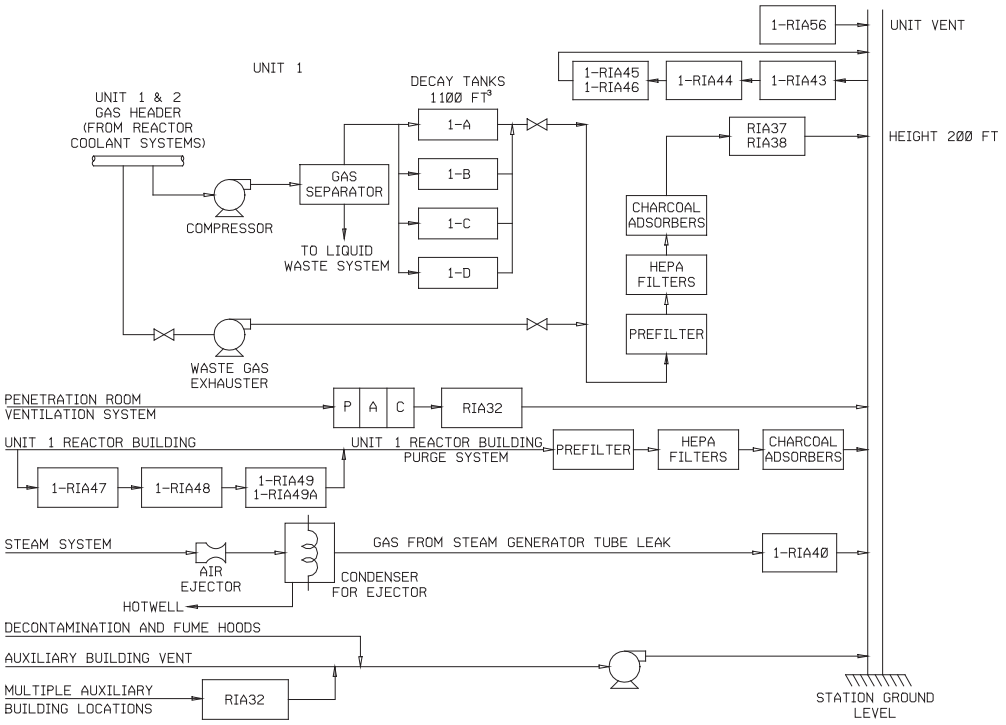

**Figure 1.0-2 Oconee Nuclear Station Gaseous Radwaste System**
**Page 2 of 4**

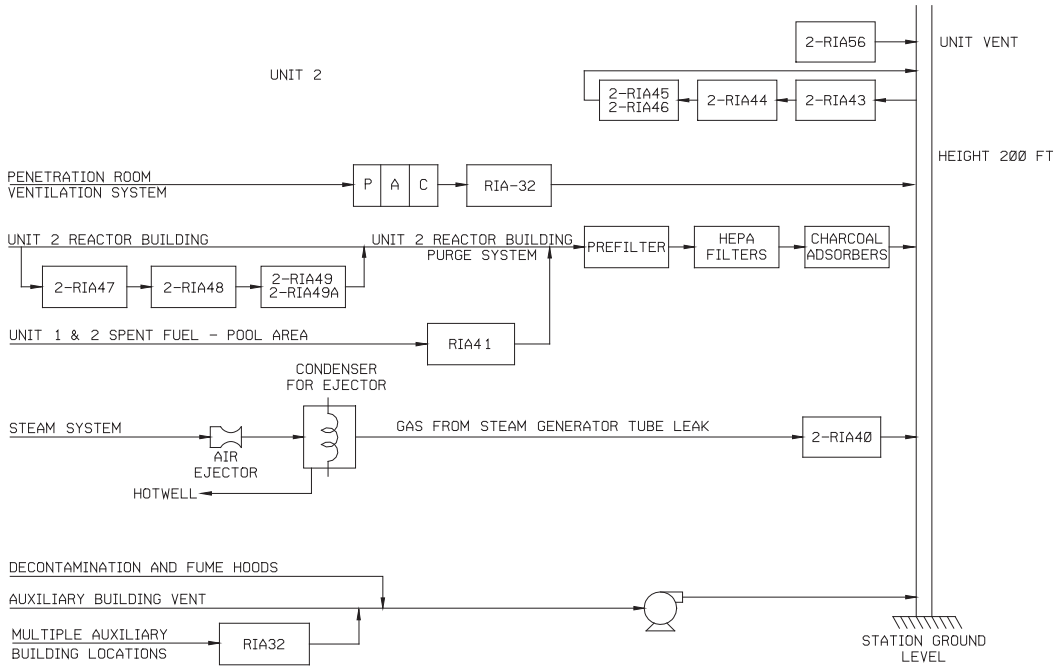

# Figure 1.0-2 Oconee Nuclear Station Gaseous Radwaste System Page 3 of 4

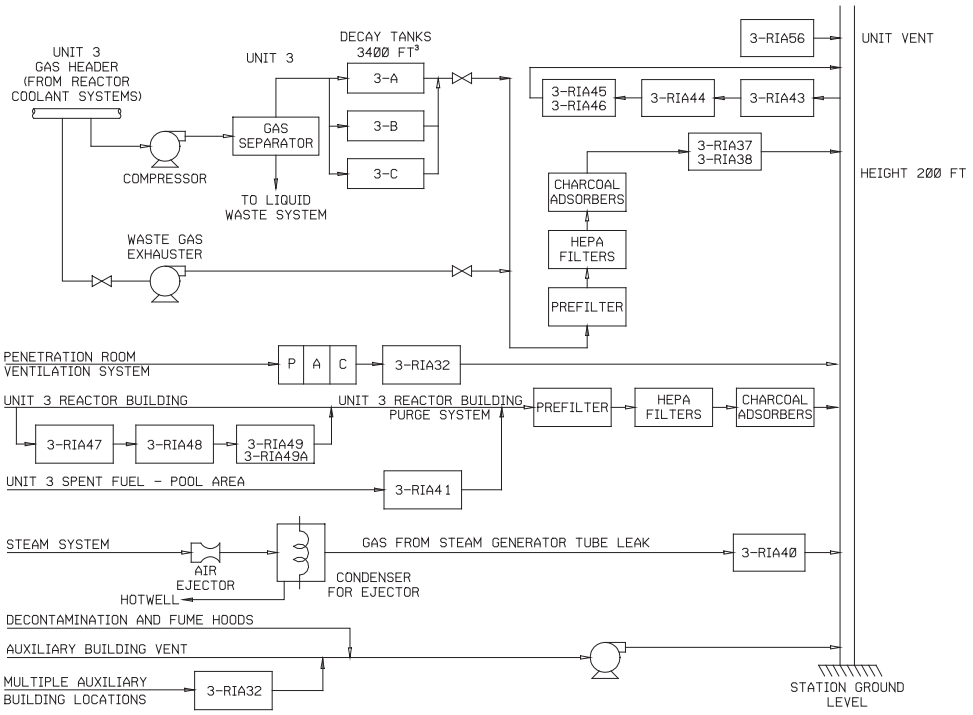

## Figure 1.0-2 Oconee Nuclear Station Gaseous Radwaste System Page 4 of 4

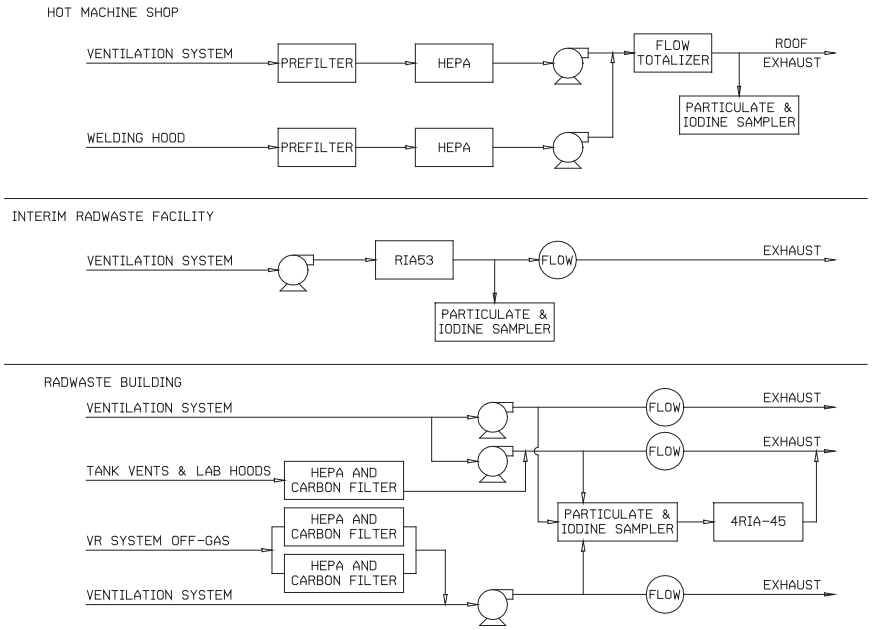

# 2.0 RELEASE RATE CALCULATIONS

## 2.0.1 LIQUID RELEASE RATE LIMIT CALCULATIONS

There are two liquid radwaste discharge points to the environment at Oconee; (1) the liquid radwaste effluent line to the Keowee Hydroelectric Unit Tailrace, and (2) the #3 Chemical Treatment Pond effluent line to the Keowee River (See Figure 2.0-1).

### 2.0.1.1 LIQUID RADWASTE EFFLUENT LINE RELEASE RATE LIMIT CALCULATION

Liquid releases to the Keowee Hydroelectric Unit Tailrace normally contain the radioactive releases from the site including effluents from the Waste Monitor Tanks, Recycle Monitor Tanks, and Decant Monitor Tank. The Keowee Tailrace discharge point can also contain Turbine Building Sump Monitor Tank (TBSMT) releases, however TBSMT effluent normally contains very low (if any) activity, and, therefore is transferred to the #3 Chemical Treatment Pond prior to release. Dilution flow for the liquid radwaste effluent line is provided by the Keowee Hydroelectric Unit and the Keowee Hydro Fire Protection liquid waste release mixing line. For purposes of the release rate calculation, Keowee hydro dilution flow is assumed to be a minimum leakage flow of 38 cfs, and a maximum flow of 6600 cfs based on one hydro unit operating at 50% power. The Keowee Hydro Fire Protection liquid waste release mixing line provides an additional 38 cfs dilution flow. Since Keowee Hydro typically releases only a small percentage of time during the year, 76 cfs (38 cfs leakage + 38 cfs mixing line) is normally assumed for dilution flow when performing liquid release rate calculations.

To comply with Technical Specifications and Selected Licensee Commitments, and to assure that the concentration of radioactive liquid effluents released from the site to the unrestricted area is limited to 10 times the effluent concentrations (ECs) of 10CFR20, Appendix B, Table 2, Column 2, and 2.0E-04 μCi/ml for dissolved and entrained noble gases, the following release rate limit calculation shall be performed for liquid releases to the Keowee Hydro Tailrace via the liquid radwaste effluent line:

$$f \leq \left(F \div \left(DF - 1\right)\right) \quad \text{Condition: DF} > 1.0 \qquad \text{Equation 2.1}$$

where:

$f$ = the undiluted effluent flow, in gpm.

$F$ = the dilution flow available, in gpm.
= normally 3.41E+04 gpm (76 cfs, based on a leakage rate of 38 cfs (19 cfs per Keowee Hydro unit), plus the Keowee Hydro Fire Protection liquid waste release

mixing line whose flow rate is 38 cfs. When Keowee Hydro enters an outage one of the two units is taken offline which temporarily reduces the amount of leakage by half. Therefore, during a Keowee Hydro outage the dilution flow is assumed to be 57 cfs (19 cfs leakage plus 38 cfs raw water, (2.56E+04 gpm)).

= or 2.96E+06 gpm (6600 cfs, based on one hydro unit operating at 50% power). This value is only used if it is known that Keowee Hydro is discharging.

$DF$ = required dilution factor to be applied to the undiluted effluent flow, unitless.

$$DF = \sigma \times \sum_i \frac{C_i}{(10 \times EC_i)} \qquad \text{Equation 2.2}$$

Note:

If $DF \leq 1.0$ then no dilution is required and the release rate is unrestricted.

If $DF > 1.0$ then dilution flow is required and the release rate is calculated using Equation 2.1. Equation 2.1 is used only when DF > 1.0.

$\sigma$ = the most restrictive recirculation factor at equilibrium, (dimensionless). The recirculation factor accounts for the fraction of discharged water reused by the station. This value equals 1.0 since discharged liquid effluent is not reused at Oconee.

$C_i$ = the concentration of radionuclide, 'i', in the undiluted liquid effluent, in μCi/ml.

$EC_i$ = the concentration of radionuclide, 'i', from 10CFR20, Appendix B, Table 2, Column 2, in μCi/ml. Note: if radionuclide, 'i', is a dissolved noble gas, then $EC_i$ = 2.00E-05 μCi/ml.

Once the maximum release rate, *f*, is calculated the value is multiplied by 0.8 for additional conservatism.

### 2.0.1.2 #3 CHEMICAL TREATMENT POND EFFLUENT LINE DISCHARGE

The #3 Chemical Treatment Pond (CTP) effluent line is the release point for station effluents that are normally considered to be non-radioactive; that is, the pond's effluent will not normally contain measurable activity above background with the exception of very low tritium activity. Tritium releases from the #3 CTP typically account for much less than 1% of the station total tritium release. It is assumed that no activity is present in the effluent until indicated by radiation monitoring measurements on the pond's inputs and/or by periodic analyses of the composite sample collected at the pond's discharge point. Inputs to this pond include the station's yard drain system, #1 CTP discharge, #2 CTP discharge, recovery well water, the decant water from the Powdex system, and the discharge from the Turbine Building Sump/TBSMT system whose contents have been

determined to be below 10EC. Inputs that have radiation monitors associated with them will be set to assure that Selected Licensee Commitment 16.11-1 will not be exceeded. #3 CTP is a continuous release path that discharges to the Keowee River (see Figure 2.0-1).

The #3 CTP may also be the discharge path for large volumes of slightly contaminated water following a primary-to-secondary leak so long as administrative procedures are implemented to assure that release rate calculations similar to that used in Section 2.0.1.1 are performed, that all detectable radionuclides will be accounted for, and that no station limits will be exceeded.

**Figure 2.0-1 Liquid Radwaste Discharge Locations**

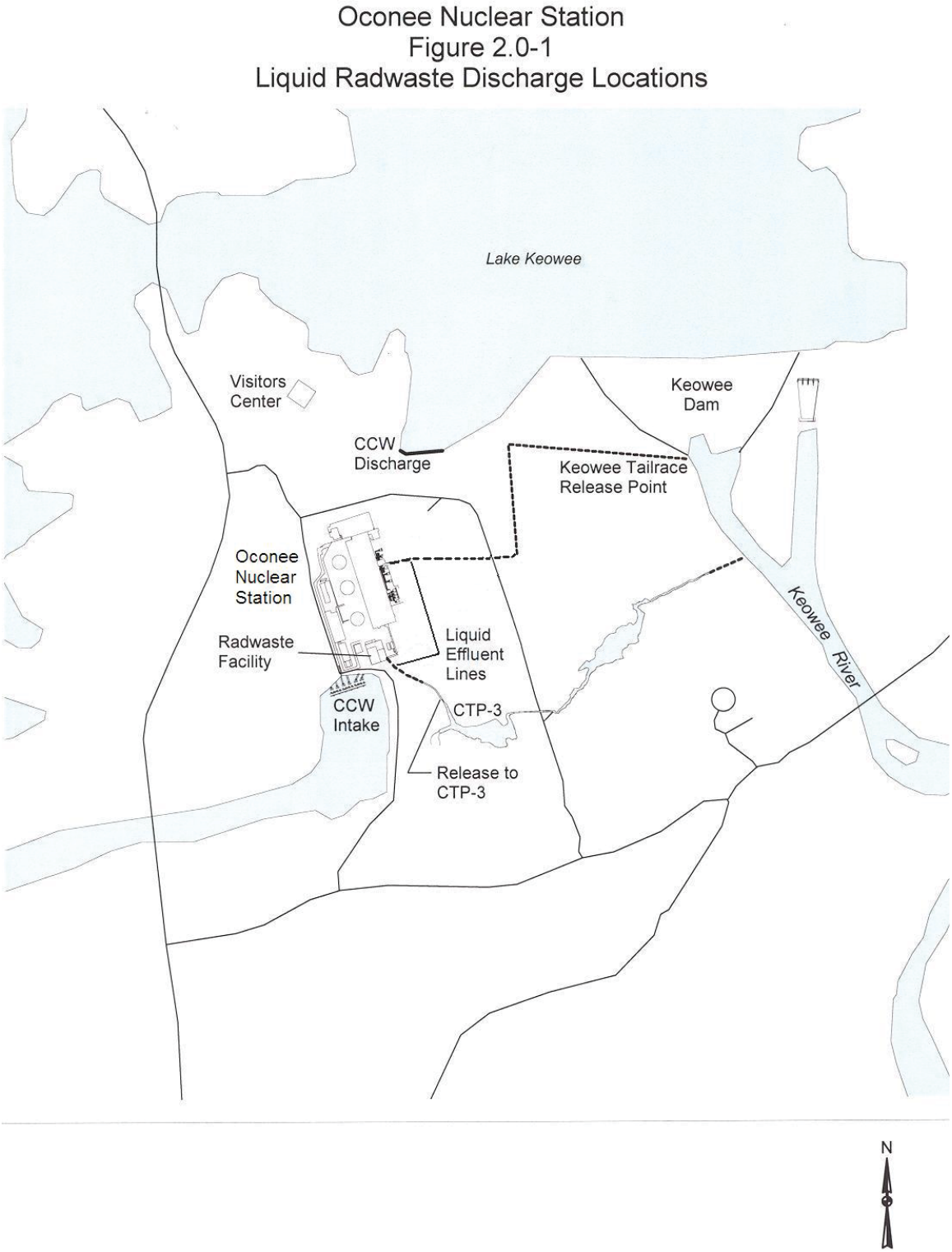

## 2.0.2 GASEOUS RELEASE RATE LIMIT CALCULATIONS

The three unit vents are the primary gaseous radioactive release points at Oconee. The unit vents are the semi-elevated release points for waste gas decay tanks, containment building purges, auxiliary building ventilation, spent fuel pool ventilation, and the condenser air ejector (see Figure 1.0-2, pages 1, 2, and 3). Each unit vent contains multi-range radiation monitors (RIAs) and flow rate measuring instrumentation.

There are three other separate gaseous effluent release points at Oconee; the Hot Machine Shop, Interim Radwaste Building and Radwaste Facility that are normally considered non-radioactive; that is, it is possible but unlikely that the effluent will contain measurable activity above background. Each of these release points are considered ground-level, and each has an effluent sampler and flow monitoring device (see Figure 1.0-2, page 4). In addition, the Interim Radwaste Building and Radwaste Facility have a RIA.

### 2.0.2.1 UNIT VENT DISCHARGE RELEASE RATE LIMIT CALCULATION

In order to comply with Technical Specifications and Selected Licensee Commitments and to assure that the dose rate, at any time, at or beyond the site boundary due to radioactive materials released in gaseous effluents from the site is limited to: ≤ 500 mrem/yr to the total body, and ≤ 3000 mrem/yr to the skin for the noble gases, and is limited to ≤ 1500 mrem/yr to any organ for radioiodine and for radioactive materials in particulate form, and radionuclides other than noble gases with half lives greater than 8 days, the following release rate and radiation monitor setpoint calculations shall be performed for releases from the waste gas decay tanks and the containment building. The release rate calculations when solved for the flow rate, 'f', are the release rates for noble gases and for radioiodines, particulates and other radionuclides with half-lives greater than 8 days. The most conservative release rate calculated shall control the flow rate. The following equations are based on the site dose rate limits. When applied to the individual release points the site dose rate values are apportioned 1/3 to each unit vent.

a. Noble Gases

Total Body:

$$\sum_i \left( K_i \times \frac{\chi}{Q} \times Q_i \right) < 500 \text{ mrem/yr} \qquad \text{Equation 2.3}$$

Skin:

$$\sum_i \left( \left( L_i + 1.1 M_i \right) \times \frac{\chi}{Q} \times Q_i \right) < 3000 \text{ mrem/yr} \qquad \text{Equation 2.4}$$

b. Radioiodines, Particulates, and Others

Inhalation, Ingestion and Ground Organ Pathways:

$$\sum_{p} \sum_{i} \left( P_{opi} \times W \times Q_i \times E_i \right) < 1500 \text{ mrem/yr}$$

To include both the food and ground organ dose and the inhalation organ dose the equation can be expanded to:

$$\sum_{p} \sum_{i} \left( \left\{ \left( P_{opi} \right)_{\text{food/gr}} \times W_{D/Q} + \left( P_{opi} \right)_{\text{inhal}} \times W_{\chi/Q} \right\} \times Q_i \times E_i \right) < 1500 \text{ mrem/yr}$$

Equation 2.5

where:

$K_i$ = the total body dose factor due to gamma emissions for each identified noble gas radionuclide, 'i', in mrem/yr per μCi/m$^3$ (See Appendix A).

$L_i$ = the skin dose factor due to beta emissions for each identified noble gas radionuclide, 'i', in mrem/yr per μCi/m$^3$ (See Appendix A).

$M_i$ = the air dose factor due to gamma emissions for each identified noble gas radionuclide, 'i', in mrad/yr per μCi/m$^3$ (See Appendix A).

1.1 = ratio to convert dose (mrad) to dose equivalent (mrem).

$P_{opi}$ = the dose parameter for radionuclides other than noble gases for the inhalation pathway, in mrem/yr per μCi/m$^3$ and for the food and ground plane pathways in (m$^2$ × (mrem/yr per μCi/sec)) for organ, 'o', and radionuclide, 'i', (See Appendix B for the pathway specific dose commitment factors). Note: NUREG-1301, page 75, specifies use of the Child age group, Inhalation pathway, for the $P_{opi}$ values.

$\chi/Q$ = the highest calculated annual average dispersion parameter for any area at or beyond the site boundary in sec/m$^3$. For the Oconee Unit Vents this value is 1.672E-6 sec/m$^3$. The location is the SW sector at 1.0 mile for semi-elevated releases. For the Hot Machine Shop, Interim Radwaste Building and Radwaste Facility this value is 7.308E-6 sec/m$^3$. The location is the SE sector at 1.0 mile for ground-level releases. As discussed in Oconee UFSAR Section 2.1.1.3, the boundary for establishing gaseous effluent release limits is the exclusion area boundary (EAB). The EAB is defined as a 1 mile radius from the station center.

$W$ = the highest calculated annual average dispersion or deposition parameter for estimating the maximum dose rate to an individual from the total inhalation, food, and ground plane pathways resulting from semi-elevated releases or ground-level releases:

$W_{\chi/Qse}$ = 1.672E-6 sec/m$^3$, for the inhalation pathway and the airborne H-3 food pathway. The location is the SW sector at 1.0 mile for semi-elevated releases.

$W_{D/Qse}$ = 1.295E-8 m$^{-2}$, for the food and ground plane pathways. The location is the NE sector at 1.0 mile for semi-elevated releases.

$W_{\chi/Qgl}$ = 7.308E-6 sec/m$^3$, for the inhalation pathway and the airborne H-3 food pathway. The location is the SE sector at 1.0 mile for ground-level releases.

$W_{D/Qgl}$ = 2.259E-8 m$^{-2}$, for the food and ground plane pathways. The location is the NE sector at 1.0 mile for ground-level releases.

$E_i$ = the filter removal factor for radionuclide, 'i', e.g., for 99% removal $E_i = 0.01$.
For iodine removal by charcoal adsorbers $E_i = 0.1$.
For particulate removal by HEPA filters $E_i = 0.01$.

$Q_i$ = the release rate of radionuclide, 'i', in gaseous effluent from all release points at the site, in μCi/sec.

$$Q_i = k_1 C_i f \div k_2 = 472 \times C_i f \qquad \text{Equation 2.6}$$

where:

$C_i$ = the concentration of radionuclide, 'i', in undiluted gaseous effluent, in μCi/ml.

$f$ = the undiluted effluent flow, in ft$^3$/min.

$k_1$ = conversion factor, 2.83E+04 cc/ft$^3$.

$k_2$ = conversion factor, 60 sec/min.

Substituting the expression for $Q_i$ in Equation 2.6 into Equations 2.3, 2.4, and 2.5, and solving for the flow rate, '$f$', in each equation gives:

Noble Gases - Total Body Maximum Release Rate:

$$f_{tb} < \frac{500}{472 \times \chi/Q \times \sum_i (K_i \times C_i)}$$

Noble Gases - Skin Maximum Release Rate:

$$f_{sk} < \frac{3000}{472 \times \chi/Q \times \sum_{i}\left[\left(L_i + 1.1M_i\right) \times C_i\right]}$$

Radioiodines, Particulates, and Others - Organ Maximum Release Rate:

$$f_{or} < \frac{1500}{472 \times \sum_{p} \sum_{i}\left(\left\{\left(P_{opi}\right)_{food/gr} \times W_{D/Q} + \left(P_{opi}\right)_{inhal} \times W_{\chi/Q}\right\} \times E_i \times C_i\right)}$$

$f_{tb}$, $f_{sk}$, and $f_{or}$, are calculated for each batch prior to release. The most limiting gaseous release rate is used to assure that no instantaneous dose rate limit is exceeded.

Once the maximum release rate, $f$, is calculated the value is multiplied by 0.8 for additional conservatism.

**Derivations of Iodine, Particulate, and H-3 Dose Commitment Factors ($P_{opi}$)**

Inhalation Pathway - Child Age Group

$$P_{opi} = K'(BR)(DFA_{oi})$$

| **Formula: from NUREG-0133, page 25.** | |
|---|---|
| Where: | |
| $P_{opi}$ | Dose commitment factor for Child age group, organ o, nuclide i, for the inhalation pathway (mrem/yr per μCi/$m^3$). (See Appendix B for the pathway specific dose commitment factors). |
| K' | Units conversion factor pCi/μCi ($10^6$). |
| BR | Breathing rate for the Child age group ($m^3$/yr, from Regulatory Guide 1.109):<br>Child – 3700 |
| $DFA_{oi}$ | Organ inhalation dose conversion factor for Child age group, organ o, nuclide i, (mrem/pCi), from Table E-9 of Regulatory Guide 1.109. |

# 3.0 SETPOINT CALCULATIONS

## 3.0.1 LIQUID RADIATION MONITOR SETPOINT CALCULATIONS

As shown on Figure 1.0-1, RIA-33 is the controlling radiation monitor for liquid batch releases at Oconee. Once the liquid release rate parameters have been established radiation monitor setpoints shall be calculated to assure that the concentration of radioactive liquid effluents released from the site to the unrestricted area is limited to ten times the effluent concentrations (ECs) of 10CFR20, Appendix B, Table 2, Column 2, and 2.0E-04 μCi/ml for dissolved and entrained noble gases. By substituting the dilution factor (DF) from Equation 2.2 into Equation 2.1, solving for the undiluted liquid effluent concentration, $C_i$, and accounting for the monitor background reading, the liquid radiation monitor setpoint can be readily obtained by multiplying $C_i$ by the radiation monitor correlation factor, $CF_i$, as follows:

$$C_i \leq \frac{(F + f) \times (10 \times EC_i)}{\sigma \times f} \qquad \text{Equation 3.1}$$

$$SP \leq \sum_i (C_i \times CF_i) + bkg \qquad \text{Equation 3.2}$$

where:

$C_i$ = the maximum allowable concentration of radionuclide, 'i', in the undiluted liquid effluent, in μCi/ml.

$SP$ = radiation monitor setpoint, in cpm.

$CF_i$ = radiation monitor correlation factor for radionuclide, 'i', in cpm/μCi/ml, e.g., 8.00E+07 cpm/μCi/ml (Cs-137) for RIA-33.

$bkg$ = background reading for the radiation monitor, in cpm.

All other parameters were previously defined.

Using conservative or "worst-case" parameters in Equation 3.1 and Equation 3.2 can provide a liquid radiation monitor setpoint that does not need to be revised for every release if activity is low enough to allow for this type of operation such as with continuous releases from the #3 CTP release point. However, for batch releases, e.g., waste monitor tanks, through the liquid radwaste effluent line to the Keowee hydro

tailrace the RIA-33 radiation monitor setpoints are calculated based on the actual expected activity in the release as follows:

First the "Correlation Concentration" (C CONC) is calculated:

$$C\ CONC = \sum_i \left(C_i \times EQ_i\right)$$

where:

$C_i$ = Undiluted liquid effluent concentration for each isotope, excluding tritium, μCi/ml.

$EQ_i$ = RIA-33 Cs-137 equivalence factor for each isotope, excluding tritium, to that of Cs-137 due to different gamma energies and abundance. This factor includes a 4-hour decay time due to the average time between sample and release. (See Table 3.0-1)

Next the RIA-33 setpoints are determined as follows:

If C CONC is > 9.0E-6 μCi/ml then three setpoint values are calculated. The actual "expected" count rate for the release is defined as the "Midpoint of Expected Range". The “Alert” setpoint is defined as 1.5 times the expected counts from activity in the liquid effluent plus background. If the “Alert” setpoint is exceeded, but there is no upward trend, the release will be allowed to continue. If RIA-33 continues to trend upward then the release will be manually terminated. The "Upper Limit of Expected Range" is defined as 3 times the expected counts from activity in the liquid effluent plus background. The “Upper Limit of Expected Range” is called the "Trip" setpoint. If the “Trip” setpoint is exceeded the release will be automatically terminated. The "Lower Limit of Expected Range" is defined as 3 times lower than the expected counts from activity in the liquid effluent plus background. The “Lower Limit of Expected Range” provides assurance that the correct liquid effluent is being released. If the RIA-33 count rate does not increase to at least the “Lower Limit of the Expected Range” then the release will be terminated, and a new sample analysis will be performed. The four RIA-33 setpoints are calculated as follows:

Lower Limit of Expected Range = C CONC × (8.00E7/3) cpm/(μCi/ml) + RIA-33 BKG

Midpoint of Expected Range = C CONC × 8.00E7 cpm/(μCi/ml) + RIA-33 BKG

Alert Setpoint = C CONC × (8.00E7×1.5) cpm/(μCi/ml) + RIA-33 BKG

Upper Limit of Expected Range (Trip Setpoint) = C CONC × (8.00E7×3) cpm/(μCi/ml) + RIA-33 BKG

If C CONC is ≤ 9.0E-6 μCi/ml then the RIA-33 setpoint is 2.16E3 cpm (9.0E-6 × 8.00E7 × 3) plus background (BKG) as the "Upper Limit of Expected Range". This setpoint is used for low activity releases, and is based on limiting the concentration in the effluent to 10 times the 10CFR20 EC of Cs-134 which has the lowest effluent concentration value (9.0E-7 μCi/ml) for any detectable radionuclide in the effluent. Similarly, the RIA-33 "Alert" setpoint for low activity releases is 1.08E3 cpm (9.0E-6 × 8.00E7 × 1.5) plus background (BKG).

As shown in Figure 1.0-1, Turbine Building Sump (TBS) discharge can be routed to either #3 CTP or to the Turbine Building Sump Monitor Tank (TBSMT). The TBS discharge is monitored by RIA-54 which is operated as a continuous sampler. Normally, TBS discharge is sent to #1 CTP or #2 CTP where the effluent is processed if it contains chemicals prior to being sent to #3 CTP. However, if RIA-54 trips on high radiation, then the TBS discharge is processed through the TBSMT where it can go to #3 CTP via the yard drain system if it is < 10EC or be released through RIA-33 if it is ≥ 10EC. RIA-54 alarm setpoints are set to provide an early warning of increased activity, and prevent TBS effluent releases in excess of station regulatory release limits (i.e., 10EC). Setpoint calculations are based on a monitor correlation factor of 7.81E-9 μCi/ml/cpm (Cs-137 equivalent) and a Cs-134 10CFR20 Effluent Concentration of 9E-7 μCi/ml. Cs-134 is the most limiting radionuclide 10CFR20 Effluent Concentration not known to be absent from the TBS effluent. The Cs-134 10CFR20 EC value of 9E-7 μCi/ml is conservatively used as a Cs-137 concentration since Cs-137 has a 10CFR20 EC value of 1E-6 μCi/ml. Setpoints are conservatively calculated using a rounded RIA-54 correlation factor of 8E-9 μCi/ml/cpm. The Alert setpoint limit is set to 1/2 of the 10EC release limit, and is based upon ten times the EC value for Cs-134 as follows:

RIA-54 Alert Setpoint = Background + 562 cpm; (i.e., 1/2 × 10 × 9E-7/8E-9 = 562).

Similarly, the Alarm setpoint limit is set to the 10EC release limit, and is based upon ten times the EC value for Cs-134 as follows:

RIA-54 Alarm Setpoint = Background + 1125 cpm; (i.e., 10 × 9E-7/8E-9 = 1125).

## Table 3.0-1

## RIA-33 Cs-137 Equivalents

| Isotope | Equivalence Factor | Isotope | Equivalence Factor | Isotope | Equivalence Factor |
|---|---|---|---|---|---|
| Be-7 | 0.1462 | Mo-99 | 0.2668 | La-141 | 0.0155 |
| F-18 | 0.5788 | Tc-99m | 0.00 | La-142 | 0.2942 |
| Na-24 | 0.8519 | Tc-101 | 0.00 | Ce-141 | 0.00 |
| Cl-38 | 0.0090 | Ru-103 | 1.3368 | Ce-143 | 0.7826 |
| K-40 | 0.1094 | Ru-105 | 0.8783 | Ce-144 | 0.0273 |
| Cr-51 | 0.1438 | Ru-106 | 0.4429 | I-130 | 3.3095 |
| Mn-54 | 1.0617 | Ag-108m | 3.4473 | I-131 | 1.4051 |
| Mn-56 | 0.4992 | Ag-110m | 3.5179 | I-132 | 1.0259 |
| Fe-59 | 1.0556 | Cd-115 | 0.5201 | I-133 | 1.1857 |
| Co-57 | 0.0022 | Cd-115m | 0.0235 | I-134 | 0.1388 |
| Co-58 | 1.4735 | In-115m | 0.3631 | I-135 | 0.9374 |
| Co-60 | 2.0495 | Sb-122 | 0.9218 | Ar-41 | 0.2229 |
| Cu-64 | 0.3954 | Sb-124 | 2.1617 | Kr-85 | 0.0059 |
| Ni-65 | 0.1591 | Sb-125 | 1.1308 | Kr-85m | 0.4280 |
| Zn-65 | 0.5584 | Sb-126 | 5.1762 | Kr-87 | 0.1213 |
| Zn-69m | 1.1391 | Sn-113 | 0.9971 | Kr-88 | 0.5278 |
| Se-75 | 1.3092 | Sn-123 | 0.0066 | Kr-89 | 0.00 |
| Br-80m | 0.0860 | Sn-126 | 0.00 | Xe-131m | 0.0167 |
| Br-82 | 3.4691 | Te-125m | 0.00 | Xe-133 | 0.0006 |
| Br-83 | 0.0059 | Te-127 | 0.0134 | Xe-133m | 0.1172 |
| Br-84 | 0.0053 | Te-127m | 0.0001 | Xe-135 | 0.8564 |
| Br-85 | 0.00 | Te-129 | 0.0138 | Xe-135m | 0.00 |
| Rb-86 | 0.0894 | Te-129m | 0.0507 | Xe-137 | 0.00 |
| Rb-88 | 0.00 | Te-131 | 0.0008 | Xe-138 | 0.00 |
| Rb-89 | 0.00 | Te-131m | 1.8463 | Nd-147 | 0.2619 |
| Sr-89 | 0.0002 | Te-132 | 0.9766 | Hf-181 | 1.4209 |
| Sr-91 | 0.6460 | Te-134 | 0.0408 | W-187 | 0.8027 |
| Sr-92 | 0.3900 | Cs-134 | 2.5804 | Tl-208 | 0.00 |
| Y-91 | 0.0031 | Cs-136 | 3.1916 | Bi-212 | 0.0144 |
| Y-91m | 0.0439 | Cs-137 | 1.00 | Bi-214 | 0.0003 |
| Y-92 | 0.1334 | Cs-138 | 0.0120 | Pb-212 | 0.4497 |
| Y-93 | 0.1091 | Ba-133 | 1.3648 | Pb-214 | 0.0020 |
| Zr-95 | 1.0909 | Ba-139 | 0.0203 | Ra-226 | 0.0320 |
| Zr-97 | 1.1210 | Ba-140 | 0.5307 | Ac-228 | 0.8261 |
| Nb-95 | 1.0821 | Ba-141 | 0.0002 | Th-228 | 0.0038 |
| Nb-95m | 0.2919 | Ba-142 | 0.00 | Np-239 | 0.3996 |
| Nb-97 | 0.1164 | La-140 | 2.3237 | | |

## 3.0.2 GASEOUS RADIATION MONITOR SETPOINT CALCULATIONS

The unit vent radiation monitor setpoints are established at the Oconee Nuclear Station to help ensure that gaseous release rate limits are not exceeded. For some release pathways in which a specific RIA exists, the setpoints also help to ensure that the effluent being released is the same concentration as indicated by manual samples, e.g. effluent from waste gas decay tanks, thereby reducing the likelihood of releasing the wrong tank. For instances in which the RIA which normally controls the release is not operable, or is "out of service", independent manual samples (IMS) are collected and the noble gas constituents from both samples are compared to help ensure that the intended "batch" is being released. For certain low potential release types, e.g. Integrated Leak Rate Tests, no RIA exists to ensure that release rate limits are not exceeded or to ensure that the effluent being released is the "expected" concentration. For such pathways, independent manual samples are required to be collected and noble gas constituents compared prior to release. The following list defines the controlling RIA for the various gaseous effluent release types at Oconee:

| Pathway | Controlling RIA |
|---|---|
| Unit 1 "A" Waste Gas Decay Tank | 1&2 RIA 37/38 |
| Unit 1 "B" Waste Gas Decay Tank | 1&2 RIA 37/38 |
| Unit 1 "C" Waste Gas Decay Tank | 1&2 RIA 37/38 |
| Unit 1 "D" Waste Gas Decay Tank | 1&2 RIA 37/38 |
| Unit 3 "A" Waste Gas Decay Tank | 3 RIA 37/38 |
| Unit 3 "B" Waste Gas Decay Tank | 3 RIA 37/38 |
| Unit 3 "C" Waste Gas Decay Tank | 3 RIA 37/38 |
| Unit 1 Reactor Building Purge | 1 RIA 45/46 |
| Unit 2 Reactor Building Purge | 2 RIA 45/46 |
| Unit 3 Reactor Building Purge | 3 RIA 45/46 |
| Unit 1 Depressurization | IMS 1 RIA 45/46 Alarm Only |
| Unit 2 Depressurization | IMS 2 RIA 45/46 Alarm Only |
| Unit 3 Depressurization | IMS 3 RIA 45/46 Alarm Only |
| Unit 1 Hydrogen Recombiner | IMS 1 RIA 45/46 Alarm Only |
| Unit 2 Hydrogen Recombiner | IMS 2 RIA 45/46 Alarm Only |
| Unit 3 Hydrogen Recombiner | IMS 3 RIA 45/46 Alarm Only |
| Unit 1 Integrated Leak Rate Test | IMS |
| Unit 2 Integrated Leak Rate Test | IMS |
| Unit 3 Integrated Leak Rate Test | IMS |

The following sections describe the methods by which setpoints are established. In general, gaseous radiation monitors are calibrated to Xe-133, and for continuous release points, e.g., the three unit vents, are preset at a maximum value based on the 500 mrem/year total body gaseous release rate limit according to the following methodology:

Note: when applied to the individual release points the 500 mrem/year site dose rate value is apportioned 30% to each Unit Vent (RIA-45 and RIA-46) semi-elevated release point. The remaining 10% is allocated to the three ground-level release points, the Hot Machine Shop (no monitor), Interim Radwaste Building (RIA-53) and Radwaste Facility (4RIA-45) that are normally considered non-radioactive. Recall from Section 2.0.2.1 the following equation:

$$K_{Xe-133} \times \chi/Q \times Q_{Xe-133} < 500 \text{ mrem/yr}$$

Solve for $Q_{Xe-133}$:

$$Q_{Xe-133} < \frac{500}{K_{Xe-133} \times \chi/Q} \qquad \text{Equation 3.4}$$

From Equation 2.6:

$$Q_{Xe-133} = 472 \times C_{Xe-133} \times f \qquad \text{Equation 3.5}$$

Substitute Equation 3.5 into Equation 3.4:

$$472 \times C_{Xe-133} \times f < \frac{500}{K_{Xe-133} \times \chi/Q}$$

Solve for $C_{Xe-133}$:

$$C_{Xe-133} < \frac{500}{472 \times f \times K_{Xe-133} \times \chi/Q}$$

$$SP = \frac{C_{Xe-133}}{CF} + bkg \qquad \text{Equation 3.6}$$

where:

$K_{Xe-133}$ = 2.94E+02, the total body dose factor due to gamma emissions for Xe-133, in mrem/year per μCi/m$^3$ (See Appendix A).

χ/Q = the highest calculated semi-elevated annual average dispersion parameter for any area at or beyond the site boundary in sec/m$^3$. For Oconee this value is 1.672E-6 sec/m$^3$. The location is the SW sector at 1.0 mile.

$Q_{Xe-133}$ = Xe-133 equivalent release rate limit for the noble gas total body dose pathway, in μCi/sec.

472 = Conversion factor, (cc/ft$^3$)/(sec/min).

$C_{Xe\text{-}133}$ = the maximum allowable Xe-133 equivalent concentration in the gaseous effluent, in μCi/cc.

$f$ = the gaseous effluent flow from the tank, building, or vent, in $ft^3$/min.

$SP$ = radiation monitor setpoint, in cpm.

$CF$ = the Xe-133 equivalent monitor correlation factor, in μCi/cc/cpm.

$bkg$ = the radiation monitor background reading, in cpm.

Equation 3.6 provides the methodology to calculate the maximum setpoint for releases from the Unit Vents (RIA-45 and RIA-46), Radwaste Facility (4RIA-45), and Interim Radwaste Building (RIA-53).

### 3.0.2.1 UNIT VENTS SETPOINTS (RIA-45 and RIA-46)

Reactor Building purges from all 3 units are released via the applicable unit vent, either Unit 1, Unit 2, or Unit 3. Each of the 3 unit vents are monitored by a normal/low range RIA (RIA-45) and a high range RIA (RIA-46). In addition to Reactor Building purges, all other releases from the main plant, including the Auxiliary Building ventilation, Waste Gas Decay Tanks, and the Spent Fuel Pools are monitored by each unit's RIA-45 and RIA-46. However, RIA-45 and RIA-46 on each unit vent have release termination authority only for Reactor Building purge releases. Each unit's RIA-45 and RIA-46 will, when operable, activate Control Room alarms if the unit vent concentration exceeds the monitor's setpoint value. The setpoints for each unit's RIA-45 and RIA-46 are established on a "worst case" basis, with the upper bound normally set at 30 percent of the station release rate limit for noble gases in Xe-133 equivalent concentration as follows:

Recall Equation 3.6:

$$SP = \frac{C_{Xe-133}}{CF} + bkg$$

where:

$$C_{Xe-133} < \frac{500}{472 \times f \times K_{Xe-133} \times \chi/Q}$$

$$RIA\text{–}45_{unit\ \mathrm{vent}} = \frac{150}{472 \times 6.5\mathrm{E{+}04} \times 294 \times 1.672\mathrm{E{-}06} \times 7.09\mathrm{E{-}08}}$$

$$RIA\text{–}45_{unit\ \mathrm{vent}} \cong 1.40\mathrm{E{+}05}\ \mathrm{cpm} + \mathrm{bkg}$$

where:

150 = 30% of the 500 mrem/yr total body release rate limit.

6.5E+04 = Unit Vent flow rate with Reactor Building Purge off, $ft^3$/min.

1.672E-06 = Highest Semi-Elevated release point dispersion factor, sec/$m^3$.

7.09E-08 = RIA-45 Correlation Factor, µCi/ml/cpm.

All other factors were previously defined.

$$RIA\text{–}46_{unit\ \mathrm{vent}} = \frac{150}{472 \times 6.5\mathrm{E{+}04} \times 294 \times 1.672\mathrm{E{-}06} \times 3.17\mathrm{E{-}04}}$$

$$RIA - 46_{unit\ \mathrm{vent}} \cong 31\,\mathrm{cpm} + \mathrm{bkg}$$

where:

3.17E-04 = RIA-46 Correlation Factor, µCi/ml/cpm.

All other factors were previously defined.

For instances in which the Reactor Building Purge is on, the setpoint is multiplied by 0.65 (65,000 cfm/ (65,000 cfm + 35,000 cfm purge flow)).

### 3.0.2.2 RADWASTE FACILITY SETPOINTS (4RIA-45)

$$4RIA\text{–}45 = \frac{25}{472 \times 1.297\mathrm{E{+}05} \times 294 \times 7.308\mathrm{E{-}06}}$$

$$4RIA\text{–}45 \cong 1.90\mathrm{E{-}04}\ \mu\mathrm{Ci/ml}$$

where:

25 = 5% of the 500 mrem/yr total body release rate limit.

1.297E+05 = Radwaste Facility Vent flow rate, $ft^3$/min.

7.308E-06 = Highest Ground-Level release point dispersion factor, sec/$m^3$.

All other factors were previously defined.

4RIA-45 reads in units of concentration, µCi/ml.

### 3.0.2.3 INTERIM RADWASTE BUILDING SETPOINTS (RIA-53)

$$RIA\text{–}53 = \frac{25}{472 \times 1.5\text{E+04} \times 294 \times 7.308\text{E–06} \times 3.4\text{E–08}}$$

$$RIA\text{–}53 \cong 4.8\text{E+04}\,\text{cpm} + \text{bkg}$$

where:

25 = 5% of the 500 mrem/yr total body release rate limit.

1.5E+04 = Interim Radwaste Building Vent flow rate, $ft^3$/min.

7.308E-06 = Highest Ground-Level release point dispersion factor, sec/$m^3$.

3.4E-08 = RIA-53 Correlation Factor, µCi/ml/cpm.

All other factors were previously defined.

In addition to the maximum setpoints discussed previously, Oconee uses "Alert" setpoints that are based on 10% of the reporting requirement from 10CFR50.73(a)(2)(viii)(A). Each unit vent Alert setpoint is based on 60% of a Xe-133 Effluent Concentration (EC) value of 5.0E-07 µCi/ml at the site boundary. The Interim Radwaste Building and Radwaste Facility are each set at 10% of the Xe-133 EC. The method used to calculate the Alert setpoints is similar to that used to calculate the maximum setpoints except that the limit is based on concentration rather than dose rate. The Alert setpoints are approximately 42% of the maximum setpoints.

### 3.0.2.4 WASTE GAS DECAY TANK SETPOINTS (RIA-37 and RIA-38)

For batch releases where the effluent can contain activity significantly above background, e.g., Waste Gas Decay Tank (WGDT), two additional monitors, RIA-37 and RIA-38 are used to establish setpoints for each WGDT batch released. RIA-37 is the normal/low range noble gas monitor, and RIA-38 is the high range noble gas monitor. The following setpoint methodology is used:

$$C_{Xe-133} = \sum_i \left(C_i \times Eq_i\right)$$

$$Expected\ \ Cpm = \frac{C_{Xe-133}}{CF_{Xe-133}} + bkg$$

$$RIA\text{-}\ 37\ and\ RIA\text{-}38\ Setpoint = \frac{C_{Xe-133}}{CF_{Xe-133}} \times 1.5 + bkg \qquad \text{Equation 3.7}$$

where:

$C_{Xe\text{-}133}$ = Xe-133 equivalent concentration of the WGDT to be released, in μCi/ml.

$Eq_i$ = Xe-133 equivalence factor for each noble gas isotope, excluding tritium, to that of Xe-133 due to different beta energies and abundance. (See Table 3.0-2).

$CF_{Xe\text{-}133}$ = The expected RIA response to a given Xe-133 equivalent concentration, in μCi/ml/cpm. 1RIA-37 = 4.20E-08 μCi/ml/cpm, 3RIA-37 = 4.20E-08 μCi/ml/cpm, 1RIA-38 and 3RIA-38 = 1.34E-03 μCi/ml/cpm.

1.5 = An adjustment factor to account for expected minor variations in effluent concentration and RIA background.

*bkg* = The radiation monitor background reading, in cpm.

When the release pathway is from any Unit 1 WGDT (A-D), and the Xe-133 equivalent concentration is less than 2.8E-01 μCi/ml, the 1&2 RIA-38 setpoint is established at 313 cpm, and the 1&2 RIA-37 setpoint is calculated using Equation 3.7.

When the release pathway is from any Unit 1 WGDT (A-D), and the Xe-133 equivalent concentration is greater than 2.8E-01 μCi/ml, the 1&2 RIA-37 setpoint is established as offscale high, and the 1&2 RIA-38 setpoint is calculated using Equation 3.7.

When the release pathway is from any Unit 3 WGDT (A-C), and the Xe-133 equivalent concentration is less than 2.8E-01 μCi/ml, the 3 RIA-38 setpoint is established at 313 cpm, and the 3 RIA-37 setpoint is calculated using Equation 3.7.

When the release pathway is from any Unit 3 WGDT (A-C), and the Xe-133 equivalent concentration is greater than 2.8E-01 μCi/ml, the 3 RIA-37 setpoint is established as offscale high, and the 3 RIA-38 setpoint is calculated using Equation 3.7.

Low activity levels in the WGDTs can result in calculated setpoint values close to background. To prevent spurious alarms, if the 1&2 RIA-37 or 3 RIA-37 setpoint is calculated to be less than 2000 cpm, then the setpoint is established at 2000 cpm above background.

## Table 3.0-2

## Xe-133 Equivalents

| Isotope | Equivalence Factor |
|---|---|
| Kr-83m | 0 |
| Kr-85m | 2.48 |
| Kr-85 | 2.56 |
| Kr-87 | 2.93 |
| Kr-88 | 2.78 |
| Kr-89 | 2.93 |
| Kr-90 | 2.93 |
| Xe-131m | 1.69 |
| Xe-133m | 1.99 |
| Xe-133 | 1.0 |
| Xe-135m | 0.83 |
| Xe-135 | 2.63 |
| Xe-137 | 2.93 |
| Xe-138 | 2.93 |
| Ar-41 | 2.82 |
| C-11 | 2.70 |

# 4.0 EFFLUENT DOSE MODELS

The effluent dose models used to show compliance with 10CFR50, Appendix I ALARA design objectives, 40CFR190 fuel cycle dose limits, and the dose values given in station SLCs are based on the methodology given in NUREG-0133 and Regulatory Guide 1.109. Dose contributions to the maximum individual shall be calculated at least every 31 days, quarterly, and annually using the RETDAS computer code which implements the ODCM methodology. RETDAS, Radioactive Effluent Tracking and Dose Assessment Software, is a database application designed by Canberra Industries, Inc. to automate many of the tasks required in the administration of effluent releases at Oconee. RETDAS performs normal operation effluent dose assessment using NUREG-0133 and Regulatory Guide 1.109 methodology.

Station long-term historical and dose projection calculations are performed periodically to determine the station's status with respect to meeting annual ALARA goals specified in the Oconee SLCs. Such calculations are used to verify that adequate margin remains during a report period to allow normal station and radwaste system operation, including anticipated operational occurrences, for the remainder of the report period without exceeding applicable goals. Station 31-day dose projections that are used to assess the need to reduce effluent releases with the Gaseous Waste (GW) or Liquid Waste (LW) systems as required in the Oconee SLCs are estimated by the previous month's calculated dose results.

Fuel cycle dose calculations shall be performed annually or as required by special reports. Dose contributions shall be calculated using the RETDAS computer program.

## 4.0.1 LIQUID EFFLUENT DOSE MODEL FOR THE MAXIMUM EXPOSED INDIVIDUAL

Of the possible exposure pathways in the aquatic environment, only three contribute significantly to the total dose; these pathways are ingestion of potable water and aquatic foods, and direct exposure from radioactivity deposited on the shoreline. The dose contribution from these pathways for measured quantities of radioactive materials identified in liquid effluents released to unrestricted areas shall be calculated for the maximum exposed individual in each age group using the methodology provided in this section.

Liquid waste processed by the LW system can be released to the environment at Oconee from two liquid discharge points; (1) directly to the Keowee Tailrace through RIA-33 and (2) to the Chemical Treatment Pond #3 discharge point into the Keowee River (See Figure 2.0-1). Liquid dose calculations for the maximum exposed individual are performed and documented in the Annual Radioactive Effluent Release Report for both locations using the applicable activity release and dilution data for each liquid effluent release point. The primary liquid effluent discharge point for Oconee is to the Keowee

Tailrace through RIA-33. In general, only low activity tritium releases (<1% station total) occur through the Chemical Treatment Pond #3 discharge point into the Keowee River. Dose calculations are performed for each of the two liquid discharge points for dose reporting purposes. The highest calculated dose from the two dose calculations is used to define the maximum individual dose from liquid releases at Oconee.

## Liquid Dose Calculations

The following equation is used for calculating liquid dose to the maximum exposed individual from each of the two liquid effluent release points:

$$Dose_{oa} = \sum_{p} \sum_{i} \left( A_{oapi} \times C_i \right) \times \Delta t \times F_n \times \frac{1}{D_w}$$

$$F_n = \frac{f}{f + F} \times \sigma$$

| **Formula: adapted from NUREG-0133, pages 15-17. Where:** | |
|---|---|
| $Dose_{oa}$ | The cumulative dose commitment for organ o and age group a, from the liquid effluent for the total time period, Δt. (mrem) |
| $A_{oapi}$ | Dose commitment factor for organ o, age group a, pathway p, and nuclide i (mrem/hr per μCi/ml). (See Appendices C through F for age group and pathway specific dose commitment factors). |
| $C_i$ | The average concentration of nuclide i, in undiluted liquid effluent during the time period, Δt. (μCi/ml) |
| Δt | The length of time over which $C_i$ and $F_n$ are averaged for all liquid releases. (hr) |
| $F_n$ | The near field average dilution factor for $C_i$ during the period of interest, Δt. Includes the recirculation factor. (dimensionless) |
| f | Average liquid radwaste flow during the period of interest, Δt. (gpm) |
| F | Average dilution flow during the period of interest, Δt. (gpm)<br>Normally this value is conservatively assumed to be 1.71E+04 gpm (38 cfs). A dilution flow of 76 cfs is more realistic since it includes bypass Keowee bypass leakage (19 cfs per Keowee Hydro unit, plus the Keowee Hydro Fire Protection liquid waste release mixing line whose flow rate is 38 cfs). No dilution credit is taken for the relatively short period of time during the year that the Keowee Hydro units are running. |
| σ | Recirculation factor. (dimensionless) * |
| $D_w$ | Dilution factor from the near field area to the potable water intake;<br>**= 30.0** for Oconee**. This factor applies to the potable water pathway only**. The nearest potable water intake to Oconee is located at the Andersen water intake approximately 31.5 miles from the site on a separate arm of Lake Hartwell. From a hydrology standpoint the Andersen water intake should not be significantly affected by liquid effluent discharges from Oconee. 30.0 is a conservatively small dilution factor based on environmental sample data. |

* The recirculation factor accounts for the fraction of discharged water reused by the station. Liquid effluent discharge cannot be recirculated back into the Oconee station. Therefore, the recirculation factor is 1.0 at Oconee.

**Derivation of Liquid Dose Commitment Factors ($A_{oapi}$)**

Potable Water

$$A_{oapi} = 1.14 \times 10^5 \times U_{aw} \times D_{aoi} \times e^{-\lambda_i t_p}$$

| **Formula: from NUREG-0133, page 16 and Regulatory Guide 1.109, page 1.109-12. Where:** | |
|---|---|
| $A_{oapi}$ | Dose commitment factor for organ o, age group a, pathway p, and nuclide i, (mrem/hr per μCi/ml). (See Appendices C through F for age group and pathway specific dose commitment factors). |
| $1.14 \times 10^5$ | Units conversion factor (pCi-yr-ml)/(μCi-hr-l). |
| $U_{aw}$ | Water consumption rate in liters per year for age group a. From Table E-5, Regulatory Guide 1.109.<br>Adult – 730<br>Teen – 510<br>Child – 510<br>Infant – 330 |
| $D_{aoi}$ | Dose factor for age group a, organ o, nuclide i, in mrem/pCi. From tables E-11 through E-14 of Regulatory Guide 1.109. |
| $\lambda_i$ | Decay constant for nuclide i, in $sec^{-1}$. |
| $t_p$ | Environmental transit time from release to receptor. Default = 4.32E+04 sec (12 hours). From Regulatory Guide 1.109, Table E-15. |

Aquatic Foods

$$A_{oapi} = 1.14 \times 10^5 \times U_{af} \times BF_i \times D_{aoi} \times e^{-\lambda_i t_p}$$

| **Formula: from NUREG-0133, page 16 and Regulatory Guide 1.109, page 1.109-12. Where:** | |
|---|---|
| $A_{oapi}$ | Dose commitment factor for organ o, age group a, pathway p, and nuclide i, (mrem/hr per μCi/ml). (See Appendices C through F for age group and pathway specific dose commitment factors). |
| $1.14\times10^5$ | Units conversion factor (pCi-yr-ml)/(μCi-hr-l). |
| $U_{af}$ | Fish consumption rate for age group a (kg/yr). From Table E-5, Regulatory Guide 1.109.<br>Adult – 21<br>Teen – 16<br>Child – 6.9<br>Infant – 0 |
| $BF_i$ | Bioaccumulation factor for nuclide i, in fish, in units of pCi/kg per pCi/liter. From Table A-1 of Regulatory Guide 1.109. |
| $D_{aoi}$ | Dose factor for age group a, organ o, nuclide i, in mrem/pCi. From tables E-11 through E-14 of Regulatory Guide 1.109. |
| $\lambda_i$ | Decay constant for nuclide i, in $sec^{-1}$. |
| $t_p$ | Environmental transit time from release to receptor. Default = 8.64E+04 sec (1 day). From Regulatory Guide 1.109, Table E-15. |

Shoreline Sediment

$$A_{oapi} = 1.14 \times 10^5 \times 100 \times DFG_{oi} \times w \times U_{as} \times T_i^{\frac{1}{2}} \times e^{-\lambda_i t_p} \times (1 - e^{-\lambda_i t_b})$$

| **Formula: adapted from Regulatory Guide 1.109, page 1.109-14.** | |
|---|---|
| Where: | |
| $A_{oapi}$ | Dose commitment factor for organ o, age group a, pathway p, and nuclide i, (mrem/hr per μCi/ml). (See Appendices C through F for age group and pathway specific dose commitment factors). |
| $1.14 \times 10^5$ | Units conversion factor (pCi-yr-ml)/(μCi-hr-l). |
| 100 | Proportionality constant used in the sediment radioactivity model, (liters/($m^2$-day). |
| $DFG_{oi}$ | Ground plane dose conversion factor for organ o, nuclide i (mrem/hr per pCi/$m^2$), from Table E-6 of Regulatory Guide 1.109. |
| w | Shoreline width factor. For Oconee = 0.2, from Table A-2, Regulatory Guide 1.109. |
| $U_{as}$ | Shoreline exposure rate for age group a (hr/yr), From Table E-5, Regulatory Guide 1.109.<br>Adult – 12<br>Teen – 67<br>Child – 14<br>Infant – 0 |
| $T_i^{1/2}$ | Nuclide half life for nuclide i, in days. |
| $\lambda_i$ | Nuclide decay constant for nuclide i. |
| $t_p$ | Average transit time to point of exposure (0 hours). |
| $t_b$ | Sediment exposure time (15 years). Page 1.109-14. |

## 4.0.2 GASEOUS EFFLUENT DOSE MODEL FOR THE MAXIMUM EXPOSED INDIVIDUAL

The dose contributions from measured quantities of radioactive materials identified in gaseous effluent released to unrestricted areas shall be calculated for the maximum gamma and beta air dose from noble gases, and for the maximum exposed individual from radioiodines, particulates, and others using the following equations:

Gaseous Dose Calculations

**Noble Gas Dose Calculations**

Gamma Air Dose

$$Dose_{\gamma} = 3.17 \times 10^{-8} \times \chi / Q \times \sum_{i} \left( M_i \times Q_i \right)$$

| **Formula: adapted from NUREG-0133, page 28.** | |
|---|---|
| Where: | |
| $Dose_{\gamma}$ | Gamma air dose for the time period of interest (mrad). |
| $3.17\times10^{-8}$ | Inverse number of seconds in year (year/seconds). |
| $M_i$ | Gamma air dose factor due to gamma emissions for nuclide i (mrad/yr per μCi/m$^3$). (See Appendix A). |
| $\chi/Q$ | The highest calculated annual average relative concentration for any area at or beyond the site boundary (sec/m$^3$)*. (See Table 6.0-9). |
| $Q_i$ | Activity for nuclide i released during the time period of interest (μCi). |

Beta Air Dose

$$Dose_{\beta} = 3.17 \times 10^{-8} \times \chi / Q \times \sum_{i} \left( N_i \times Q_i \right)$$

| **Formula: adapted from NUREG-0133, page 28.** | |
|---|---|
| Where: | |
| $Dose_{\beta}$ | Beta air dose for the time period of interest (mrad). |
| $3.17\times10^{-8}$ | Inverse number of seconds in year (year/seconds). |
| $N_i$ | Beta air dose factor due to beta emissions for nuclide i (mrad/yr per μCi/m$^3$). (See Appendix A). |
| $\chi/Q$ | The highest calculated annual average relative concentration for any area at or beyond the site boundary (sec/m$^3$)*. (See Table 6.0-9). |
| $Q_i$ | Activity for nuclide i released during the time period of interest (μCi). |

**Iodine, Particulates, and H-3 Dose Organ Dose Calculation**

$$Dose_{oa} = 3.17 \times 10^{-8} \times W \times \sum_{p} \sum_{i} \left( R_{oapi} \times Q_i \right)$$

| **Formula: adapted from NUREG-0133, pages 29 & 30.** | | |
|---|---|---|
| Where: | | |
| $Dose_{oa}$ | The cumulative dose commitment to the total body or any organ o, for an individual of age group a (mrem). | |
| $3.17 \times 10^{-8}$ | Inverse number of seconds in year (year/seconds). | |
| $R_{oapi}$ | Dose commitment factor for organ o, age group a, pathway p, and nuclide i. The units are based on whether a dispersion or deposition factor is used. When a χ/Q is used the units are mrem/yr per μCi/m$^3$. When a D/Q is used the units are (m$^2$ · mrem/yr) per μCi/sec. (See Appendices G through J for age group and pathway specific dose commitment factors). | |
| W* | Dispersion (χ/Q) or deposition factor (D/Q). The factor used is based upon the pathway. Note: χ/Q is always used for tritium and C-14. | |
| | Pathway | Factor Used |
| | Ground Plane Deposition | D/Q (m$^{-2}$) |
| | Inhalation | χ/Q (sec/m$^3$) |
| | Vegetation | D/Q (m$^{-2}$) |
| | Grass/Cow/Milk | D/Q (m$^{-2}$) |
| | Grass/Goat/Milk | D/Q (m$^{-2}$) |
| | Grass/Cow/Meat | D/Q (m$^{-2}$) |
| $Q_i$** | Activity for nuclide i, released during the time period of interest (μCi). | |

* The dose from noble gases released from semi-elevated release points, e.g., unit vent, is calculated using the semi-elevated dispersion factors. The dose from noble gases released from ground level release points, e.g., Radwaste Facility vent, is calculated using the ground level dispersion factors. The total dose is the sum of the semi-elevated and ground level dose calculations. Maximum individual organ dose is determined by calculating the organ dose at each of the χ/Q and D/Q locations shown in Table 6.0-9 and Table 6.0-10 (128 locations) for both semi-elevated release points and ground level release points, summing the two at each location, and then choosing the dose from the maximum location. Dose is calculated only for those pathways (e.g., garden, milk animal, etc.) that actually exist at each location as determined by the land use census shown in Table 6.0-3. As discussed in Oconee UFSAR Section 2.1.1.3, the boundary for establishing gaseous effluent release limits is the exclusion area boundary (EAB). The EAB is defined as a 1 mile radius from the station center.

** C-14 airborne activity released to the environment is estimated based on actual power generation as discussed in Regulatory Guide 1.21, Revision 2. A value of 9.4 Ci/GWe-yr is used along with actual power generation to estimate C-14 activity released to the environment via gaseous effluents from Oconee. 9.4 Ci/GWe-yr is based on information from "*Estimation of Carbon-14 in Nuclear Power Plant Gaseous Effluents",* EPRI, Palo Alto, CA: 2010. 1021106.

**Derivations of Iodine, Particulate, and H-3 Dose Commitment Factors ($R_{oapi}$)**

Ground Plane Deposition Pathway

$$R_{oapi} = K'K''(SF)DFG_{oi}\left[\frac{(1-e^{-\lambda_i t})}{\lambda_i}\right]$$

| **Formula: from NUREG-0133, page 32.** | |
|---|---|
| Where: | |
| $R_{oapi}$ | Dose commitment factor for organ o, age group a, nuclide i, for ground plane deposition pathway ($m^2$·mrem/yr per μCi/sec). (See Appendices G through J for age group and pathway specific dose commitment factors). |
| K' | Units conversion factor pCi/μCi ($10^6$). |
| K" | Units conversion factor 8760 hr/year. |
| SF | Shielding factor (dimensionless) (0.7, from Regulatory Guide 1.109). |
| $DFG_{oi}$ | Ground plane dose conversion factor for organ o, nuclide i (mrem/hr per pCi/$m^2$), from Table E-6 of Regulatory Guide 1.109. |
| $\lambda_i$ | Nuclide decay constant for nuclide i ($sec^{-1}$). |
| t | Exposure time, $4.73\times10^8$ seconds (15 years). |

Inhalation Pathway

$$R_{oapi} = K'(BR_a)(DFA_{oi})_a$$

| **Formula: from NUREG-0133, page 31.** | |
|---|---|
| Where: | |
| $R_{oapi}$ | Dose commitment factor for organ o, age group a, nuclide i, for inhalation pathway (mrem/yr per μCi/$m^3$). (See Appendices G through J for age group and pathway specific dose commitment factors). |
| K' | Units conversion factor pCi/μCi ($10^6$). |
| $BR_a$ | Breathing rate for age group ($m^3$/yr), from Regulatory Guide 1.109:<br>Adult – 8000<br>Teen – 8000<br>Child – 3700<br>Infant – 1400 |
| $(DFA_{oi})_a$ | Organ inhalation factor dose conversion factor for organ o, nuclide i, age group a (mrem/pCi), from Tables E-7 through E-10 of Regulatory Guide 1.109. |

Vegetation

$$R_{oapi} = K'\left[\frac{(r)}{Y_v(\lambda_i + \lambda_w)}\right] \times (DFL_{oi})_a \times \left[U_a^L f_L e^{-\lambda_i t_L} + U_a^S f_g e^{-\lambda_i t_h}\right]$$

| **Formula: from NUREG-0133, page 35. Where:** | |
|---|---|
| $R_{oapi}$ | Dose commitment factor for organ o, age group a, nuclide i, for vegetation pathway ($m^2$·mrem/yr per μCi/sec). (See Appendices G through J for age group and pathway specific dose commitment factors). |
| K' | Units conversion factor pCi/μCi ($10^6$). |
| r | Fraction of deposited activity retained on vegetation, from Regulatory Guide 1.109.<br>1.0 for radioiodine.<br>0.2 for particulates. |
| $Y_v$ | Vegetation areal density (kg/$m^2$) (2.0, from Regulatory Guide 1.109). |
| $\lambda_i$ | Nuclide decay constant for nuclide i ($sec^{-1}$). |
| $\lambda_w$ | Decay constant for removal of activity on leaf and plant surfaces by weathering ($5.73\times10^{-7}$ $sec^{-1}$, from NUREG-0133). |
| $(DFL_{oi})_a$ | Ingestion dose conversion factor for nuclide i, organ o, and age group a, from Tables E-11 through E-14 of Reg. Guide 1.109 (mrem/pCi). |
| $U^L_a$ | Consumption rate of fresh leafy vegetation for age group a (kg/yr) (from Regulatory Guide 1.109).<br>Adult – 64<br>Teen – 42<br>Child – 26<br>Infant – 0 |
| $f_L$ | Fraction of annual intake of fresh leafy vegetation grown locally (1.0, from NUREG-0133). |
| $t_L$ | Average time between harvest of leafy vegetation and consumption ($8.6\times10^4$ seconds, (1 day), from Regulatory Guide 1.109). |
| $U^S_a$ | Consumption rate of stored vegetation for age group a (kg/yr) (from Regulatory Guide 1.109).<br>Adult – 520<br>Teen – 630<br>Child – 520<br>Infant – 0 |
| $f_g$ | Fraction of annual intake of stored vegetation (0.76, from Regulatory Guide 1.109). |
| $t_h$ | Average time between harvest of stored vegetation and consumption ($5.18\times10^6$ seconds, (60 days), from Regulatory Guide 1.109). |

Vegetation – Tritium

$$R_{oapi} = K' K''' \left[ U_a^L f_L + U_a^S f_g \right] (DFL_{oi})_a \left[ 0.75(0.5/H) \right]$$

| **Formula: from NUREG-0133, page 36.** | |
|---|---|
| Where: | |
| $R_{oapi}$ | Dose commitment factor for organ o, age group a, for vegetation pathway and tritium (mrem/yr per μCi/m$^3$). (See Appendices G through J for age group and pathway specific dose commitment factors). |
| K' | Units conversion factor pCi/μCi ($10^6$). |
| K''' | Units conversion factor gm/kg ($10^3$). |
| $U^L_a$ | Consumption rate of fresh leafy vegetation for age group a (kg/yr) (from Regulatory Guide 1.109).<br>Adult – 64<br>Teen – 42<br>Child – 26<br>Infant – 0 |
| $f_L$ | Fraction of annual intake of fresh leafy vegetation grown locally (1.0, from NUREG-0133). |
| $U^S_a$ | Consumption rate of stored vegetation for age group a (kg/yr) (from Regulatory Guide 1.109).<br>Adult – 520<br>Teen – 630<br>Child – 520<br>Infant – 0 |
| $f_g$ | Fraction of annual intake of stored vegetation (0.76, from Regulatory Guide 1.109). |
| $(DFL_{oi})_a$ | Ingestion dose conversion factor for nuclide i, organ o, and age group a, from Tables E-11 through E-14 of Regulatory Guide 1.109 (mrem/pCi). |
| 0.75 | Fraction of total feed that is water. (From NUREG-0133). |
| 0.5 | Ratio of specific activity of feed grass water to atmospheric water. (From NUREG-0133). |
| H | Absolute humidity of the atmosphere (8 gm/m$^3$, from Regulatory Guide 1.109). |

Vegetation – Carbon-14

$$R_{oapi} = \mathrm{K'K'''}\left[U_a^L f_L + U_a^S f_g\right](DFL_{oi})_a\left[0.11/0.16\right](p)(f_I)$$

| **Formula: from NUREG-0133, page 36 and Regulatory Guide 1.109, page 26.** | |
|---|---|
| Where: | |
| $R_{oapi}$ | Dose commitment factor for organ o, age group a, for vegetation pathway and carbon-14 (mrem/yr per μCi/m$^3$). (See Appendices G through J for age group and pathway specific dose commitment factors). |
| K' | Units conversion factor pCi/μCi ($10^6$). |
| K''' | Units conversion factor gm/kg ($10^3$). |
| $U^L_a$ | Consumption rate of fresh leafy vegetation for age group a (kg/yr) (from Regulatory Guide 1.109).<br>Adult – 64<br>Teen – 42<br>Child – 26<br>Infant – 0 |
| $f_L$ | Fraction of annual intake of fresh leafy vegetation grown locally (1.0, from NUREG-0133). |
| $U^S_a$ | Consumption rate of stored vegetation for age group a (kg/yr) (from Regulatory Guide 1.109).<br>Adult – 520<br>Teen – 630<br>Child – 520<br>Infant – 0 |
| $f_g$ | Fraction of annual intake of stored vegetation (0.76, from Regulatory Guide 1.109). |
| $(DFL_{oi})_a$ | Ingestion dose conversion factor for nuclide i, organ o, and age group a, from Tables E-11 through E-14 of Regulatory Guide 1.109 (mrem/pCi). |
| 0.11 | Fraction of total plant mass that is natural carbon. |
| 0.16 | Concentration of natural carbon in the atmosphere (gm/m$^3$). |
| p | Ratio of the total annual C-14 release time to the total annual time during which photosynthesis occurs. This value is assumed to be 0.35, based on 70% of C-14 releases being from WGDTs, and 30% of C-14 releases being continuous from the unit vents (ref. IAEA Technical Reports Series no. 421, "Management of Waste Containing Tritium and Carbon-14", 2004). |
| $f_I$ | The fraction of C-14 assumed to be in inorganic form (e.g., $CO_2$). Assumed to be 20%. Reference EPRI TR-105715, "Characterization of Carbon-14 Generated by the Nuclear Power Industry", Table 5-1. |

Grass/Cow/Milk

$$R_{oapi} = K' \frac{Q_F(U_{ap})}{\lambda_i + \lambda_w} F_{mi}(r)(DFL_{oi})_a \left[ \frac{f_p f_s}{Y_p} + \frac{(1 - f_p f_s)e^{-\lambda_i t_h}}{Y_s} \right] e^{-\lambda_i t_f}$$

| **Formula: from NUREG-0133, pages 32 & 33. Where:** | |
|---|---|
| $R_{oapi}$ | Dose commitment factor for organ o, age group a, nuclide i, for grass/cow/milk pathway ($m^2$·mrem/yr per µCi/sec). (See Appendices G through J for age group and pathway specific dose commitment factors). |
| K' | Units conversion factor pCi/µCi ($10^6$). |
| $Q_F$ | Cow consumption rate (50 kg/day, from Regulatory Guide 1.109) |
| $U_{ap}$ | Consumption rate of cow milk for age group a (liters/yr, from Regulatory Guide 1.109).<br>Adult – 310<br>Teen – 400<br>Child – 330<br>Infant – 330 |
| r | Fraction of deposited activity retained on cow's feed grass, (from Regulatory Guide 1.109).<br>1.0 for radioiodine.<br>0.2 for particulates. |
| $Y_p$ | Agricultural productivity by unit area of pasture feed grass (0.7 kg/$m^2$, from Regulatory Guide 1.109). |
| $Y_s$ | Agricultural productivity by unit area of stored feed (2.0 kg/$m^2$, from Regulatory Guide 1.109). |
| $\lambda_i$ | Nuclide decay constant for nuclide i ($sec^{-1}$). |
| $\lambda_w$ | Decay constant for removal of activity on leaf and plant surfaces by weathering ($5.73\times10^{-7}$ $sec^{-1}$, from NUREG-0133). |
| $(DFL_{oi})_a$ | Ingestion dose conversion factor for nuclide i, organ o, and age group a, from Tables E-11 through E-14 of Regulatory Guide 1.109 (mrem/pCi). |
| $F_{mi}$ | Stable element transfer coefficient for nuclide i, in days/liter, from Table E-1 of Regulatory Guide 1.109 for cow milk. |
| $f_p$ | Fraction of year that the cow is on pasture (1.0, from RG 1.109). |
| $f_s$ | Fraction of the cow feed that is pasture grass while the cow is on pasture (1.0, from Regulatory Guide 1.109). |
| $t_f$ | Transport time for pasture to cow, to milk, to receptor (1.73E+05 seconds, from Regulatory Guide 1.109). |
| $t_h$ | Transport time from pasture, to harvest, to cow, to milk, to receptor (7.78e+06 seconds, from Regulatory Guide 1.109). |

Grass/Cow/Milk – Tritium

$$R_{oapi} = K' K''' F_{mi} Q_f U_{ap} (DFL_{io})_a \left[0.75(0.5/H)\right]$$

| **Formula: from NUREG-0133, page 34.** | |
|---|---|
| Where: | |
| $R_{oapi}$ | Dose commitment factor for organ o, age group a, nuclide i, for grass/cow/milk pathway (mrem/yr per μCi/m$^3$). (See Appendices G through J for age group and pathway specific dose commitment factors). |
| K' | Units conversion factor pCi/μCi ($10^6$). |
| K''' | Units conversion factor gm/kg ($10^3$). |
| $Q_F$ | Cow consumption rate (50 kg/day, from Regulatory Guide 1.109). |
| $U_{ap}$ | Consumption rate of cow milk for age group a (liters/yr, from Regulatory Guide 1.109).<br>Adult – 310<br>Teen – 400<br>Child – 330<br>Infant – 330 |
| $(DFL_{oi})_a$ | Ingestion dose conversion factor for nuclide i, organ o, and age group a, from Tables E-11 through E-14 of Regulatory Guide 1.109 (mrem/pCi). |
| $F_{mi}$ | Stable element transfer coefficient for nuclide i, in days/liter, from Table E-1 of Regulatory Guide 1.109 for cow milk. |
| 0.75 | Fraction of total feed that is water (from NUREG-0133). |
| 0.5 | Ratio of specific activity of feed grass water to atmospheric water (from NUREG-0133). |
| H | Absolute humidity of the atmosphere (8 gm/m$^3$, from Regulatory Guide 1.109). |

Grass/Cow/Milk – Carbon-14

$$R_{oapi} = \mathrm{K'K'''}\, \mathrm{F}_{mi}\, \mathrm{Q}_F\, \mathrm{U}_{ap}\, (DFL_{oi})_a [0.11/0.16](p)(f_I)$$

| **Formula: from NUREG-0133, page 34 and Regulatory Guide 1.109, page 26.** | |
|---|---|
| Where: | |
| $R_{oapi}$ | Dose commitment factor for organ o, age group a, nuclide i, for grass/cow/meat pathway (mrem/yr per μCi/m$^3$). (See Appendices G through J for age group and pathway specific dose commitment factors). |
| K' | Units conversion factor pCi/μCi ($10^6$). |
| K''' | Units conversion factor gm/kg ($10^3$). |
| $F_{mi}$ | Stable element transfer coefficient for nuclide i, in days/liter, from Table E-1 of Regulatory Guide 1.109 for cow milk. |
| $Q_F$ | Cow consumption rate (50 kg/day, from Regulatory Guide 1.109). |
| $U_{ap}$ | Consumption rate of cow milk for age group a (liters/yr) (from Regulatory Guide 1.109).<br>Adult – 310<br>Teen – 400<br>Child – 330<br>Infant – 330 |
| $(DFL_{oi})_a$ | Ingestion dose conversion factor for nuclide i, organ o, and age group a, from Tables E-11 through E-14 of Regulatory Guide 1.109 (mrem/pCi). |
| 0.11 | Fraction of total plant mass that is natural carbon. |
| 0.16 | Concentration of natural carbon in the atmosphere (gm/m$^3$). |
| p | Ratio of the total annual C-14 release time to the total annual time during which photosynthesis occurs. This value is assumed to be 0.35, based on 70% of C-14 releases being from WGDTs, and 30% of C-14 releases being continuous from the unit vents (ref. IAEA Technical Reports Series no. 421, "Management of Waste Containing Tritium and Carbon-14", 2004). |
| $f_I$ | The fraction of C-14 assumed to be in inorganic form (e.g., $CO_2$). Assumed to be 20%. Reference EPRI TR-105715, "Characterization of Carbon-14 Generated by the Nuclear Power Industry", Table 5-1. |

Grass/Goat/Milk

$$R_{oapi} = K' \frac{Q_F(U_{ap})}{\lambda_i + \lambda_w} F_{mi}(r)(DFL_{oi})_a \left[ \frac{f_p f_s}{Y_p} + \frac{(1 - f_p f_s)e^{-\lambda_i t_h}}{Y_s} \right] e^{-\lambda_i t_f}$$

| **Formula: from NUREG-0133, pages 32 & 33. Where:** | |
|---|---|
| $R_{oapi}$ | Dose commitment factor for organ o, age group a, nuclide i, for grass/goat/milk pathway ($m^2$·mrem/yr per μCi/sec). (See Appendices G through J for age group and pathway specific dose commitment factors). |
| K' | Units conversion factor pCi/μCi ($10^6$). |
| $Q_F$ | Goat consumption rate (6 kg/day, from Regulatory Guide 1.109). |
| $U_{ap}$ | Consumption rate of goat milk for age group a (liters/yr, from Regulatory Guide 1.109).<br>Adult – 310<br>Teen – 400<br>Child – 330<br>Infant – 330 |
| r | Fraction of deposited activity retained on goat's feed grass, from Regulatory Guide 1.109.<br>1.0 for radioiodine.<br>0.2 for particulates. |
| $Y_p$ | Agricultural productivity by unit area of pasture feed grass (0.7 kg/$m^2$, from Regulatory Guide 1.109). |
| $Y_s$ | Agricultural productivity by unit area of stored feed (2.0 kg/$m^2$, from Regulatory Guide 1.109). |
| $\lambda_i$ | Nuclide decay constant for nuclide i ($sec^{-1}$). |
| $\lambda_w$ | Decay constant for removal of activity on leaf and plant surfaces by weathering ($5.73\times10^{-7}$ $sec^{-1}$, from NUREG-0133). |
| $(DFL_{oi})_a$ | Ingestion dose conversion factor for nuclide i, organ o, and age group a, from Tables E-11 through E-14 of Regulatory Guide 1.109 (mrem/pCi). |
| $F_{mi}$ | Stable element transfer coefficient for nuclide i, in days/liter, from Table E-2 of Regulatory Guide 1.109 for goat milk. |
| $f_p$ | Fraction of year that the goat is on pasture (1.0, from RG 1.109). |
| $f_s$ | Fraction of the goat feed that is pasture grass while the goat is on pasture (1.0, from Regulatory Guide 1.109). |
| $t_f$ | Transport time for pasture to goat, to milk, to receptor (1.73E+05 seconds, from Regulatory Guide 1.109). |
| $t_h$ | Transport time from pasture, to harvest, to goat, to milk, to receptor (7.78e+06 seconds, from Regulatory Guide 1.109). |

Grass/Goat/Milk – Tritium

$$R_{oapi} = K' K''' F_{mi} Q_f U_{ap} (DFL_{oi})_a \left[0.75(0.5/H)\right]$$

| **Formula: from NUREG-0133, page 34.** | |
|---|---|
| Where: | |
| $R_{oapi}$ | Dose commitment factor for organ o, age group a, nuclide i, for grass/goat/milk pathway (mrem/yr per μCi/m$^3$). (See Appendices G through J for age group and pathway specific dose commitment factors). |
| K' | Units conversion factor pCi/μCi ($10^6$). |
| K''' | Units conversion factor gm/kg ($10^3$). |
| $Q_F$ | Goat consumption rate (6 kg/day, from Regulatory Guide 1.109). |
| $U_{ap}$ | Consumption rate of goat milk for age group a (liters/yr, from Regulatory Guide 1.109).<br>Adult – 310<br>Teen – 400<br>Child – 330<br>Infant – 330 |
| $(DFL_{oi})_a$ | Ingestion dose conversion factor for nuclide i, organ o, and age group a, from Tables E-11 through E-14 of Regulatory Guide 1.109 (mrem/pCi). |
| $F_{mi}$ | Stable element transfer coefficient for nuclide i, in days/liter, from Table E-2 of Regulatory Guide 1.109 for goat milk. |
| 0.75 | Fraction of total feed that is water (from NUREG-0133). |
| 0.5 | Ratio of specific activity of feed grass water to atmospheric water (from NUREG-0133). |
| H | Absolute humidity of the atmosphere (8 gm/m$^3$, from Regulatory Guide 1.109). |

Grass/Goat/Milk – Carbon-14

$$R_{oapi} = \mathrm{K'K'''}\, \mathrm{F}_{mi}\, \mathrm{Q}_F\, \mathrm{U}_{ap}\, (DFL_{oi})_a [0.11/0.16](p)(f_I)$$

| **Formula: from NUREG-0133, page 34 and Regulatory Guide 1.109, page 26.** | |
|---|---|
| Where: | |
| $R_{oapi}$ | Dose commitment factor for organ o, age group a, nuclide i, for grass/cow/meat pathway (mrem/yr per μCi/m$^3$). (See Appendices G through J for age group and pathway specific dose commitment factors). |
| K' | Units conversion factor pCi/μCi ($10^6$). |
| K''' | Units conversion factor gm/kg ($10^3$). |
| $F_{mi}$ | Stable element transfer coefficient for nuclide i, in days/liter, from Table E-2 of Regulatory Guide 1.109 for goat milk (0.10). |
| $Q_F$ | Goat consumption rate (6 kg/day, from Regulatory Guide 1.109). |
| $U_{ap}$ | Consumption rate of goat milk for age group a (liters/yr) (from Regulatory Guide 1.109).<br>Adult – 310<br>Teen – 400<br>Child – 330<br>Infant – 330 |
| $(DFL_{oi})_a$ | Ingestion dose conversion factor for nuclide i, organ o, and age group a, from Tables E-11 through E-14 of Regulatory Guide 1.109 (mrem/pCi). |
| 0.11 | Fraction of total plant mass that is natural carbon. |
| 0.16 | Concentration of natural carbon in the atmosphere (gm/m$^3$). |
| p | Ratio of the total annual C-14 release time to the total annual time during which photosynthesis occurs. This value is assumed to be 0.35, based on 70% of C-14 releases being from WGDTs, and 30% of C-14 releases being continuous from the unit vents (ref. IAEA Technical Reports Series no. 421, "Management of Waste Containing Tritium and Carbon-14", 2004). |
| $f_I$ | The fraction of C-14 assumed to be in inorganic form (e.g., $CO_2$). Assumed to be 20%. Reference EPRI TR-105715, "Characterization of Carbon-14 Generated by the Nuclear Power Industry", Table 5-1. |

Grass/Cow/Meat

$$R_{oapi} = K' \frac{Q_F (U_{ap})}{\lambda_i + \lambda_w} F_{fi}(r)(DFL_i)_a \left[ \frac{f_p f_s}{Y_p} + \frac{(1 - f_p f_s) e^{-\lambda_i t_h}}{Y_s} \right] e^{-\lambda_i t_f}$$

| **Formula: from NUREG-0133, pages 34 & 35. Where:** | |
|---|---|
| $R_{oapi}$ | Dose commitment factor for organ o, age group a, nuclide i, for grass/cow/meat pathway ($m^2$·mrem/yr per µCi/sec). (See Appendices G through J for age group and pathway specific dose commitment factors). |
| K' | Units conversion factor pCi/µCi ($10^6$). |
| $Q_F$ | Cow consumption rate (50 kg/day, from Regulatory Guide 1.109). |
| $U_{ap}$ | Consumption rate of cow meat for age group a (kg/yr, from Regulatory Guide 1.109).<br>Adult – 110<br>Teen – 65<br>Child – 41<br>Infant – 0 |
| r | Fraction of deposited activity retained on cow's feed grass (from Regulatory Guide 1.109).<br>1.0 for radioiodine.<br>0.2 for particulates. |
| $Y_p$ | Agricultural productivity by unit area of pasture feed grass (0.7 kg/$m^2$, from Regulatory Guide 1.109). |
| $Y_s$ | Agricultural productivity by unit area of stored feed (2.0 kg/$m^2$, from Regulatory Guide 1.109). |
| $\lambda_i$ | Nuclide decay constant for nuclide i ($sec^{-1}$). |
| $\lambda_w$ | Decay constant for removal of activity on leaf and plant surfaces by weathering ($5.73\times10^{-7}$ $sec^{-1}$, from NUREG-0133). |
| $(DFL_{oi})_a$ | Ingestion dose conversion factor for nuclide i, organ o, and age group a, from Tables E-11 through E-14 of Regulatory Guide 1.109 (mrem/pCi). |
| $F_{fi}$ | Stable element transfer coefficient for nuclide i, in days/kg, from Table E-1 of Regulatory Guide 1.109 for cow meat. |
| $f_p$ | Fraction of year that the cow is on pasture (1.0, from RG 1.109). |
| $f_s$ | Fraction of the cow feed that is pasture grass while the cow is on pasture (1.0, from Regulatory Guide 1.109). |
| $t_f$ | Transport time from pasture to receptor (1.73E+06 seconds, from Regulatory Guide 1.109). |
| $t_h$ | Transport time from crop field to receptor (7.78E+06 seconds, from Regulatory Guide 1.109). |

Grass/Cow/Meat – Tritium

$$R_{oapi} = K' K''' F_{fi} Q_F U_{ap} (DFL_{oi})_a \left[0.75(0.5/H)\right]$$

| **Formula: from NUREG-0133, page 35.** | |
|---|---|
| Where: | |
| $R_{oapi}$ | Dose commitment factor for organ o, age group a, nuclide i, for grass/cow/meat pathway (mrem/yr per μCi/m$^3$). (See Appendices G through J for age group and pathway specific dose commitment factors). |
| K' | Units conversion factor pCi/μCi ($10^6$). |
| K''' | Units conversion factor gm/kg ($10^3$). |
| $Q_F$ | Cow consumption rate (50 kg/day, from Regulatory Guide 1.109). |
| $U_{ap}$ | Consumption rate of cow meat for age group a (kg/yr, from Regulatory Guide 1.109).<br>Adult – 110<br>Teen – 65<br>Child – 41<br>Infant – 0 |
| $(DFL_{oi})_a$ | Ingestion dose conversion factor for nuclide i, organ o, and age group a, from Tables E-11 through E-14 of Regulatory Guide 1.109 (mrem/pCi). |
| $F_{fi}$ | Stable element transfer coefficient for nuclide i, in days/liter, from Table E-1 of Regulatory Guide 1.109 for cow meat. |
| 0.75 | Fraction of total feed that is water (from NUREG-0133). |
| 0.5 | Ratio of specific activity of feed grass water to atmospheric water (from NUREG-0133). |
| H | Absolute humidity of the atmosphere (8 gm/m$^3$, from Regulatory Guide 1.109). |

Grass/Cow/Meat – Carbon-14

$$R_{oapi} = \mathrm{K'K'''}\, \mathrm{F}_{fi}\, \mathrm{Q}_F\, \mathrm{U}_{ap}\, (DFL_{oi})_a \left[0.11/0.16\right](p)(f_I)$$

| **Formula: from NUREG-0133, page 35 and Regulatory Guide 1.109, page 26.** | |
|---|---|
| Where: | |
| $R_{oapi}$ | Dose commitment factor for organ o, age group a, nuclide i, for grass/cow/meat pathway (mrem/yr per μCi/m$^3$). (See Appendices G through J for age group and pathway specific dose commitment factors). |
| K' | Units conversion factor pCi/μCi ($10^6$). |
| K''' | Units conversion factor gm/kg ($10^3$). |
| $F_{fi}$ | Stable element transfer coefficient for nuclide i, in days/liter, from Table E-1 of Regulatory Guide 1.109 for cow meat. |
| $Q_F$ | Cow consumption rate (50 kg/day, from Regulatory Guide 1.109). |
| $U_{ap}$ | Consumption rate of cow meat for age group a (kg/yr) (from Regulatory Guide 1.109).<br>Adult – 110<br>Teen – 65<br>Child – 41<br>Infant – 0 |
| $(DFL_{oi})_a$ | Ingestion dose conversion factor for nuclide i, organ o, and age group a, from Tables E-11 through E-14 of Regulatory Guide 1.109 (mrem/pCi). |
| 0.11 | Fraction of total plant mass that is natural carbon. |
| 0.16 | Concentration of natural carbon in the atmosphere (gm/m$^3$). |
| p | Ratio of the total annual C-14 release time to the total annual time during which photosynthesis occurs. This value is assumed to be 0.35, based on 70% of C-14 releases being from WGDTs, and 30% of C-14 releases being continuous from the unit vents (ref. IAEA Technical Reports Series no. 421, "Management of Waste Containing Tritium and Carbon-14", 2004). |
| $f_I$ | The fraction of C-14 assumed to be in inorganic form (e.g., $CO_2$). Assumed to be 20%. Reference EPRI TR-105715, "Characterization of Carbon-14 Generated by the Nuclear Power Industry", Table 5-1. |

## 4.0.3 DIRECT RADIATION

Direct radiation is that radiation from confined sources, and does not include any external component from radioactive effluents. The point kernel method has been used to calculate offsite dose rates from radioactive materials stored in the refueling water storage tanks, reactor makeup water storage tanks, and temporary onsite radwaste storage tanks. Dose calculations using this method performed for Oconee Nuclear Station indicate direct radiation doses are much less than 0.01 mrem/yr and, therefore, make a negligible contribution to individual dose.

Likewise, direct and air-scatter radiation dose contributions from the onsite Independent Spent Fuel Storage Installation (ISFSI) at Oconee have been calculated and documented in the Oconee 10CFR72.212 evaluation report. The results of the calculation demonstrate that the annual dose to any "real individual" beyond the controlled area boundary is below the 10CFR72.104(a) and 40CFR190.10(a) limit of 25 mrem from direct and skyshine radiation, and all other fuel cycle sources (e.g., effluent).

Direct radiation doses will not be calculated routinely.

## 4.0.4 EFFLUENT APPORTIONMENT

For the Oconee Nuclear Station the effluent releases are apportioned equally to each unit for each site as recommended by Section 3.1 of NUREG-0133, because the shared radwaste treatment systems at each site make it impractical to accurately ascribe releases to a specific reactor unit. For Annual Effluent Release Report purposes effluent releases are summed for each unit, and the maximum individual dose to the public is reported as a site total.

# 5.0 FUEL CYCLE CALCULATIONS

In accordance with the requirements of 40CFR190, the annual dose commitment to any member of the general public shall be calculated to assure that doses are limited to 25 millirems to the total body or any organ with the exception of the thyroid which is limited to 75 millirems. In accordance with the requirements of the Selected Licensee Commitments, the annual dose commitment shall also be calculated any time twice the specified quarterly dose limit of the Selected Licensee Commitments is exceeded; these annual dose commitments may not just be calculated for the calendar year.

The "Uranium fuel cycle" is defined in 40CFR Part 190.02(b) as:

"Uranium fuel cycle means the operations of milling or uranium ore, chemical conversion of uranium, isotopic enrichment of uranium, fabrication of uranium fuel, generation of electricity by a light-water-cooled nuclear power plant using uranium fuel, and reprocessing of spent uranium fuel, to the extent that these directly support the production of electrical power for public use utilizing nuclear energy, but excludes mining operations, operations at waste disposal sites, transportation of any radioactive material in support of these operations, and the reuse of recovered non-uranium special nuclear and by-product materials from the cycle."

Based on this definition of the fuel cycle and the information in 10CFR51, Table S-3, and Wash-1248, the radiological impact of the following operations has been assessed for Oconee Nuclear Station:

## 5.0.1 MILLING

No milling operations occur within fifty miles of the Oconee Nuclear Station.

## 5.0.2 CONVERSION

No uranium hexafluoride production occurs within fifty miles of the Oconee Nuclear Station.

## 5.0.3 ENRICHMENT

No uranium enrichment operations occur within fifty miles of the Oconee Nuclear Station.

## 5.0.4 FUEL FABRICATION

No fuel fabrication operations occur within fifty miles of the Oconee Nuclear Station.

## 5.0.5 NUCLEAR POWER PRODUCTION

The production of electricity for public use using light-water-cooled nuclear power stations results in increments of dose to individuals within fifty miles of any station due to liquid and gaseous effluent releases and direct radiation or skyshine. The increments of dose resulting from liquid and gaseous effluent releases will be calculated using the ODCM methodology implemented in the RETDAS computer program. The dose from direct radiation, skyshine, and radiation from the station storage facilities has been estimated using conservative assumptions (see Section 4.0.3).

In certain situations more than one nuclear power station site may contribute to the doses to be considered in making fuel cycle dose assessments in accordance with 40CFR190. However, since the Oconee nuclear station is located over 100 miles from the Catawba and McGuire nuclear stations, the relative dose contribution from each site to the other is insignificant, and can be ignored in assessing compliance with 40CFR190.

## 5.0.6 FUEL REPROCESSING

No fuel reprocessing operations occur within fifty miles of the Oconee Nuclear Station.

## 5.0.7 40CFR190 TOTAL DOSE DETERMINATION

To summarize, only dose increments from nuclear power production operations (Section 5.0.5) need be considered in calculations to demonstrate compliance with the requirements of 40CFR190. The fuel cycle dose assessments for Oconee Nuclear Station only include liquid and gaseous dose contributions from Oconee and dose from Oconee's ISFSI since no other uranium fuel cycle facility contributes significantly to Oconee's maximum exposed individual. For this dose assessment, the total body and maximum organ dose contributions to the maximum exposed individual from Oconee's liquid and gaseous effluents are estimated using the following calculations:

$$D_{wb}(T) = D_{wb}(l) + D_{wb}(g)$$

$$D_{mo}(T) = D_{mo}(l) + D_{mo}(g)$$

where:

$D_{wb}(T)$ = Total estimated fuel cycle whole body dose commitment resulting from the combined liquid and gaseous effluents of Oconee during the calendar year of interest, in mrem.

$D_{mo}(T)$ = Total estimated fuel cycle maximum organ dose commitment resulting from the combined liquid and gaseous effluents of Oconee during the calendar year of interest, in mrem.

# 6.0 ENVIRONMENTAL LOCATIONS

## 6.0.1 SITE DESCRIPTION AND SAMPLE LOCATIONS

Oconee Nuclear Station (ONS) is located in Oconee County, South Carolina, approximately 8 miles northeast of Seneca, South Carolina, on the shore of Lake Keowee. This lake was formed by damming the Keowee and Little Rivers in that location. Immediately to the south is the U.S. Government Hartwell Project. The Keowee Hydroelectric Plant near the station joins Lake Keowee and the upper reaches of Lake Hartwell. To the north, the Jocassee Hydroelectric Plant joins Lake Jocassee and Lake Keowee. Jocassee is a pumped storage plant. The ONS exclusion area boundary is 1 mile.

Table 6.0-1 and Table 6.0-2 define the sampling and TLD locations for the Oconee Radiological Monitoring Program. Figure 6.0-1 and Figure 6.0-2 illustrate these locations as compared to Oconee Nuclear Station.

## 6.0.2 LAND USE CENSUS DATA

The Annual Land Use Census, required by Selected Licensee Commitments, is performed to ensure that changes in the use of areas at or beyond the site boundary are identified, and that modifications to the Radiological Environmental Monitoring Program are made if required by changes in land use. This census satisfies the requirements of Section IV.B.3 of Appendix I to 10CFR50. Results are shown in Table 6.0-3 and Figure 6.0-3.

# TABLE 6.0-1

## OCONEE RADIOLOGICAL MONITORING PROGRAM SAMPLING LOCATIONS

| Table 6.0-1 Codes | | | |
|---|---|---|---|
| W | Weekly | SM | Semimonthly |
| BW | BiWeekly | Q | Quarterly |
| M | Monthly | SA | Semiannually |
| C | Control | | |

| Site # | Location Description* | Air Rad. & Particulate | Surface Water | Drinking Water | Shoreline Sediment | Fish | Milk | Broadleaf Vegetation |
|---|---|---|---|---|---|---|---|---|
| 060 | Greenville Water Intake Road (3.23 NE) | | | M | | | | |
| 060 C ** | Greenville Water Intake Road (2.28 NE) | | | | | SA | | |
| 062 C | Lake Keowee Hydro Intake (0.85 mi ENE) | | M | | | | | |
| 063 | Lake Hartwell Hwy 183 Bridge (0.80 mi ESE) [000.7] | | | | SA | SA | | |
| 063.1 | Lake Hartwell Hwy 183 (0.79 mi E) | | M | | | | | |
| 064 C | Seneca (6.67 mi SSW) [004.1] | | | M | | | | |
| 066 | Anderson (18.9 mi SSE) [012] | | | M | | | | |
| 067 | Lawrence Ramsey Bridge Hwy 27 (4.34 mi SSE) [005.2] | | | | SA | SA | | |
| 068 C | High Falls County Park (1.82 mi W) | | | | SA | | | |
| 071 C | Clemson Dairy (10.2 mi SSE) [006.3] | | | | | | SM | |
| 074 | Keowee Key Resort (2.36 mi NNW) | W | | | | | | |
| 077 | Skimmer Wall (1.00 mi SW) | W | | | | | | M |
| 078.1 | Recreation Site (0.53 mi WSW) | W | | | | | | |
| 079 | Keowee Dam (0.56 mi NE) | W | | | | | | M |
| 081 C | Clemson Operations Center (9.33 mi SE) | W | | | | | | M |
| 084 | Sue Craig Road (2.58 mi NNE) | W | | | | | | M |
| 085 | Lake Services / Building B9125 (0.88 mi NNW) | W | | | | | | |

* GPS data reflect approximate accuracy to within 2-5 meters. GPS field measurements were taken as close as possible to the item of interest.

** Control for Fish Only
[ ] Location Numbers prior to 1984

# TABLE 6.0-2

## OCONEE RADIOLOGICAL MONITORING PROGRAM SAMPLING LOCATIONS

## (TLD SITES)

| Site # | Location* | Distance | Sector | Site # | Location* | Distance | Sector |
|---|---|---|---|---|---|---|---|
| 020 | SITE BOUNDARY | 0.16 miles | N | 040 | MICROWAVE TOWER, SIX MILE | 4.74 miles | E |
| 021 | SITE BOUNDARY | 0.25 miles | NNE | 041 | JCT HWY 101 & 133 | 4.25 miles | ESE |
| 022 | SITE BOUNDARY | 0.53 miles | NE | 042 | LAWRENCE CHAPEL CHURCH, HWY 133 | 4.93 miles | SE |
| 023 | SITE BOUNDARY | 0.93 miles | ENE | 043 | HWY 291 AT ISSAQUEENA PARK | 4.09 miles | SSE |
| 024 | SITE BOUNDARY | 0.79 miles | E | 044 | HWY 130 AT LITTLE RIVER DAM | 3.96 miles | S |
| 025 | SITE BOUNDARY | 0.42 miles | ESE | 045 | TERMINUS OF HWY 588 AT CROOKED CREEK | 4.78 miles | SSW |
| 026 | SITE BOUNDARY | 0.34 miles | SE | 046 | HWY 188 AT CROOKED CREEK | 4.61 miles | SW |
| 027 | SITE BOUNDARY | 0.49 miles | SSE | 047 | NEW HOPE CHURCH, HWY 188 | 3.58 miles | WSW |
| 028 | SITE BOUNDARY | 0.46 miles | S | 048 | JCT HWY 175 & 188 | 3.64 miles | W |
| 029 | SITE BOUNDARY | 0.56 miles | SSW | 049 | JCT HWY 201 & 92 | 3.60 miles | WNW |
| 030 | SITE BOUNDARY | 0.42 miles | SW | 050 | STAMP CREEK LANDING, END OF HWY 92 | 3.53 miles | NW |
| 031 | SITE BOUNDARY | 0.27 miles | WSW | 051 | HWY 128, 1 MILE N OF HWY 130 | 4.64 miles | NNW |
| 076 | SITE BOUNDARY | 0.19 miles | W | 052 | DPC BRANCH OFFICE SITE - PICKENS | 12.4 miles | ENE |
| 032 | SITE BOUNDARY | 0.19 miles | WNW | 053 | DPC BRANCH OFFICE SITE - LIBERTY | 11.7 miles | E |
| 033 | SITE BOUNDARY | 0.21 miles | WNW | 054 | POST OFFICE - HWY 93 NORRIS | 8.60 miles | ESE |
| 034 | SITE BOUNDARY | 0.22 miles | NW | 055 | CLEMSON METEOROLOGY PLOT | 9.27 miles | SSE |
| 035 | SITE BOUNDARY | 0.17 miles | NNW | 056 | WATER TOWER - SENECA | 7.30 miles | SSW |
| 036 | MILE CREEK LANDING | 4.18 miles | N | 057 | OCONEE MEMORIAL HOSPITAL | 8.42 miles | SW |
| 037 | KEOWEE CHURCH, HWY 327 | 4.85 miles | NNE | 058 C | BRANCH RD SUBSTATION, WALHALLA | 9.39 miles | WSW |
| 038 | CONVENIENCE MART, JCT HWY 183 & 133 | 4.24 miles | NE | 059 | TAMASSEE DAR SCHOOL | 9.20 miles | NW |
| 039 | HWY 133, 1 MILE EAST OF JCT HWY 183 & 133 | 4.02 miles | ENE | 081 C | CLEMSON OPERATIONS CENTER | 9.33 miles | SE |

C = Control

* GPS data reflect approximate accuracy to within 2-5 meters. GPS field measurements were taken as close as possible to the item of interest.

## TABLE 6.0-3

## Oconee 2012 Land Use Census Results*

## Land Use Census performed 6/13/2012

| Sector | | Distance (Miles)** | Sector | | Distance (Miles)** |
|---|---|---|---|---|---|
| N | Nearest Residence<br>Nearest Milk Animal | 2.98<br>- | S | Nearest Residence<br>Nearest Milk Animal | 1.96<br>- |
| NNE | Nearest Residence<br>Nearest Milk Animal | 1.84<br>- | SSW | Nearest Residence<br>Nearest Milk Animal | 1.36<br>- |
| NE | Nearest Residence<br>Nearest Milk Animal | 1.20<br>- | SW | Nearest Residence<br>Nearest Milk Animal | 1.31<br>- |
| ENE | Nearest Residence<br>Nearest Milk Animal | 1.34<br>- | WSW | Nearest Residence<br>Nearest Milk Animal | 1.76<br>- |
| E | Nearest Residence<br>Nearest Milk Animal | 1.64<br>- | W | Nearest Residence<br>Nearest Milk Animal | 1.58<br>- |
| ESE | Nearest Residence<br>Nearest Milk Animal | 1.57<br>- | WNW | Nearest Residence<br>Nearest Milk Animal | 1.35<br>- |
| SE | Nearest Residence<br>Nearest Milk Animal | 1.46<br>- | NW | Nearest Residence<br>Nearest Milk Animal | 1.04<br>- |
| SSE | Nearest Residence<br>Nearest Milk Animal | 1.54<br>- | NNW | Nearest Residence<br>Nearest Milk Animal | 1.03<br>- |

"-" indicates no occurrences within the 5 mile radius

* The land use census identifies nearest pathways to the exclusion area boundary (EAB, ~ 1.0 mile) for each of the 16 sectors. Locations beyond the nearest pathway for each sector are assumed to contain that pathway for dose calculation purposes. At Oconee, broad leaf vegetation samples are taken in lieu of a garden census. For dose calculation purposes, since a garden location cannot be ruled out, a garden is assumed to exist at the site boundary and beyond for every sector. For the 4.5-5.0 mile sector all pathways, i.e., residence, garden, milk animal (goat), and meat animal (cow), are assumed to exist for dose calculation purposes.

** GPS data reflect approximate accuracy to within 2-5 meters. GPS field measurements were taken as close as possible to the item of interest.

**Figure 6.0-1 Sampling Locations Map (Site Boundary)**

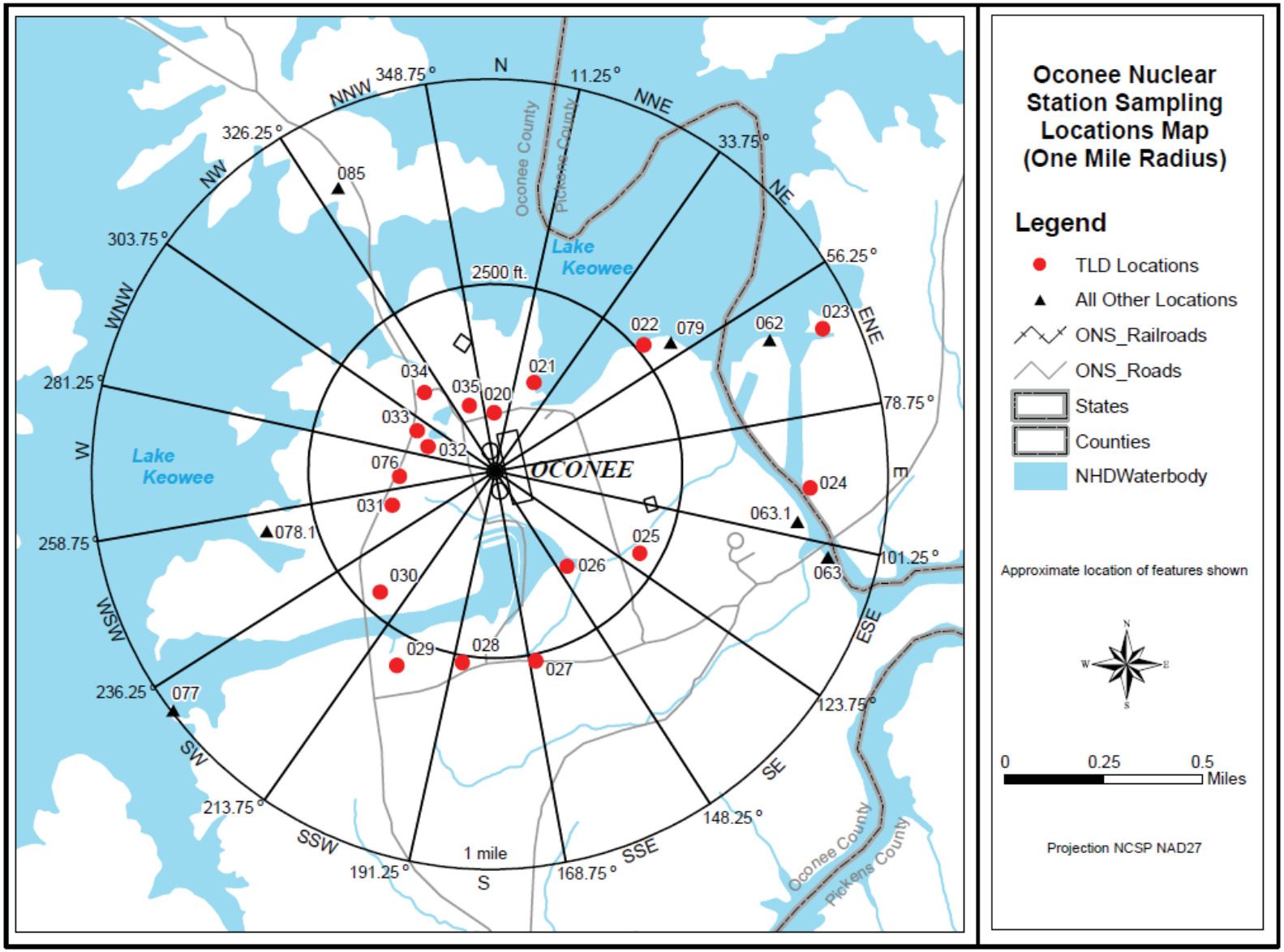

**Figure 6.0-2 Sampling Locations Map (Ten Mile Radius)**

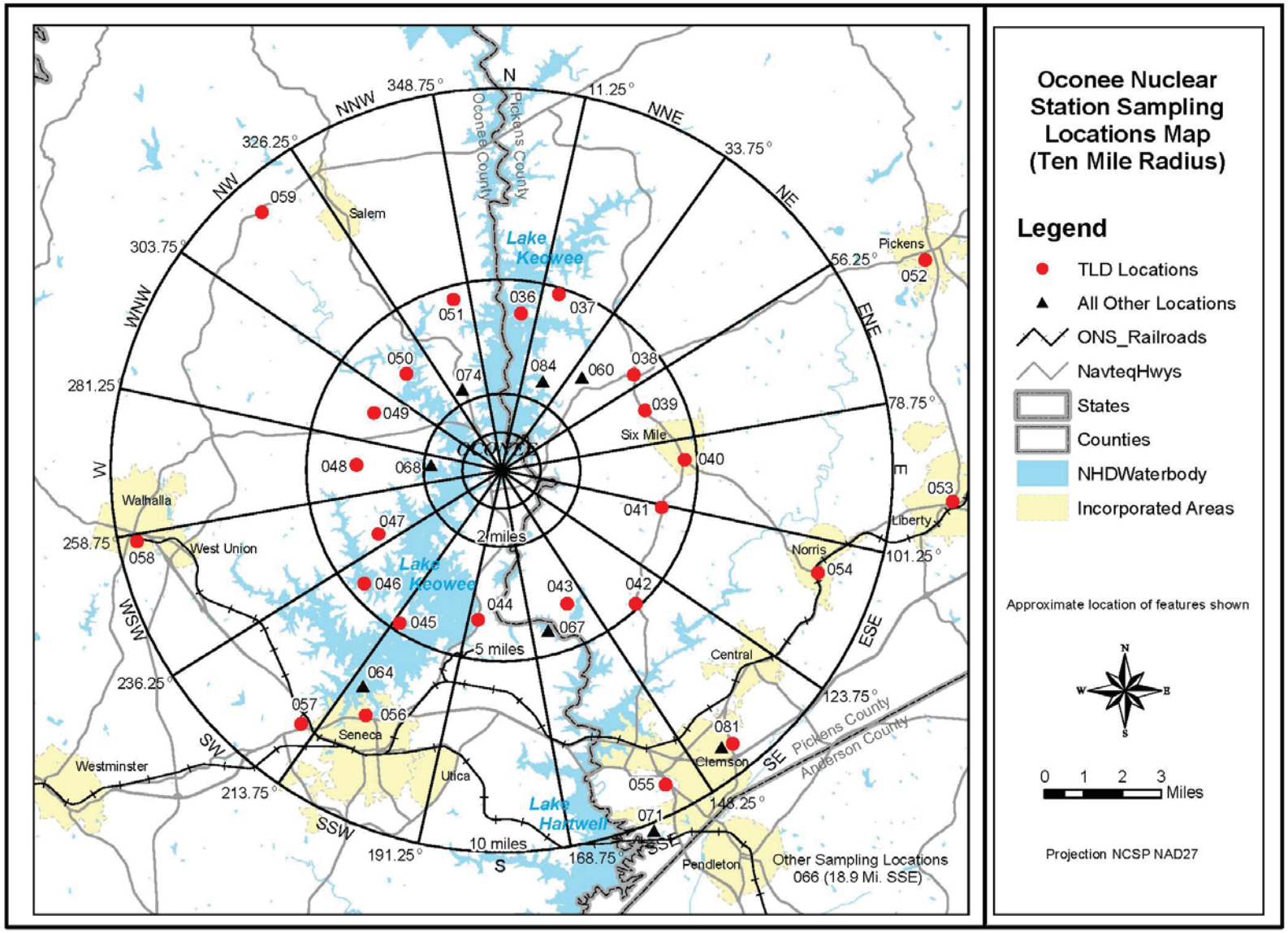

**Figure 6.0-3 ONS 2012 Land Use Census Map**

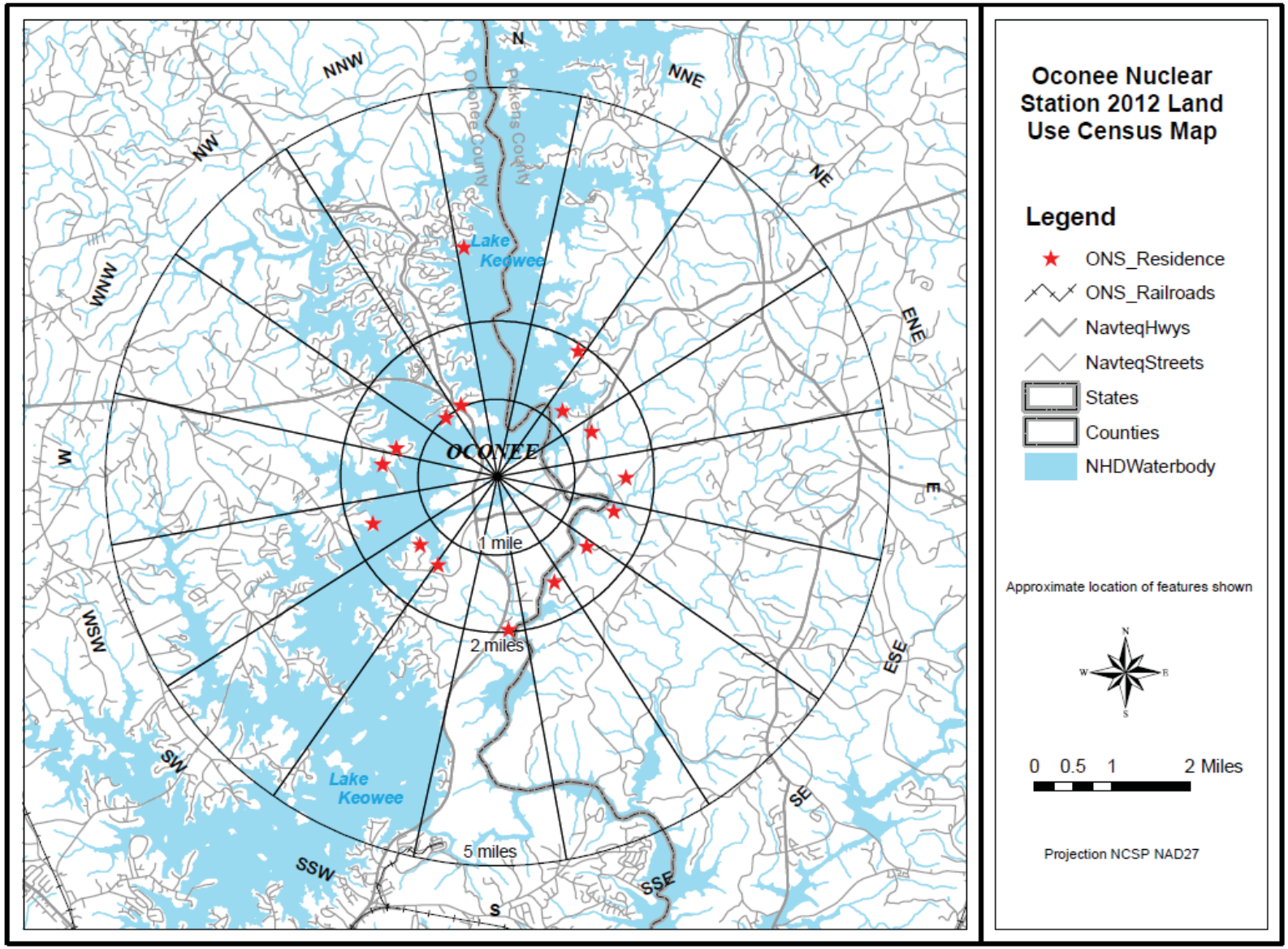

## 6.0.3 OCONEE METEOROLOGY: RELATIVE AIR CONCENTRATIONS AND DEPOSITION

Calculations of annually averaged air concentrations and deposition values from routine releases provide the air dispersion and deposition factors needed for dose assessment. The methodology is based upon Regulatory Guide 1.111, as implemented by the NRC's computer model "XOQDOQ: Computer Program for the Meteorological Evaluation of Routine Effluent Releases at Nuclear Power Stations," NUREG/CR-2919, PNL-4380, September 1982.

Five years of hourly meteorological data from the onsite instruments are processed into a representative joint frequency distribution of winds and atmospheric stability for input into the XOQDOQ model (Version 2.0). Thus, the air dispersion and deposition factors ($\chi$/Q and D/Q) output by the model are based on a five-year climatology for the site.

### 6.0.3.1 XOQDOQ METHODOLOGY AND ASSUMPTIONS

A continuous, routine release (non-purge) is simulated from each unit vent. The unit vent release type is categorized as semi-elevated, being elevated approximately 92% of the time and being at ground-level approximately 8% of the time. This is based on RG 1.111 criteria, with the ratio (i.e. 3.64) of the average exit velocity (11.39 m/s) to the mean wind speed at the 60 m release height (3.13 m/s). To account for all release pathways, Oconee is modeled as both a totally "ground-level" release and as a "mixed-mode" release, with two model runs of XOQDOQ.

Surrounding terrain heights are not input for ground-level releases, but are used for the elevated portion of mixed-mode releases. The locale consists of rolling terrain, so the default open terrain recirculation factor is applied in XOQDOQ [KOPT(8)=1]. This correction factor is recommended in RG 1.111 to adjust the straight-line airflow of the model for spatial and temporal variations that are produced by large scale weather patterns, or other non-linear flow conditions at local and regional scales.

In order for XOQDOQ to treat the plume as a ground-level release, the exit velocity and the inside diameter of the unit vent must be input as zero. The heat emission rate of each vent is also assumed to be zero, as recommended by the model. A release height of 10 m is assumed for the ground-level release, with actual plant grade of 796 ft msl. Using the building height (58 m) and minimum cross-sectional area of the containment building (2296 $m^2$), XOQDOQ applies a building wake correction to the relative air concentrations.

For the mixed-mode release, the exit velocities (11.1, 11.3, and 11.7 m/s for U1-U3, respectively) and inside diameters (1.8 m) of the unit vents are input to the XOQDOQ model for each vent. The heat emission rate of each vent is still assumed to be zero, as in the ground-level release. Plant grade elevation is now input as zero, however, to properly

utilize the input terrain heights above yard grade elevation (Table 6.0-4). The height of the vent (60.7 m) above plant grade is used to determine the plume centerline height.

**Table 6.0-4**

**Terrain Heights Above ONS Yard Grade Elevation (m)**

| Distance: | 0.5 mile | 1 mile | 1.5 miles | 2.0 miles | 2.5 miles | 3.0 miles | 3.5 miles | 4.0 miles | 4.5 miles | 5.0 miles |
|---|---|---|---|---|---|---|---|---|---|---|
| S | 29 | 38 | 38 | 38 | 38 | 38 | 50 | 50 | 50 | 50 |
| SSW | 32 | 44 | 50 | 50 | 50 | 50 | 50 | 50 | 50 | 50 |
| SW | 38 | 44 | 44 | 44 | 50 | 50 | 50 | 50 | 50 | 50 |
| WSW | 44 | 44 | 44 | 44 | 44 | 44 | 44 | 48 | 48 | 57 |
| W | 48 | 48 | 48 | 48 | 48 | 55 | 58 | 73 | 73 | 73 |
| WNW | 29 | 29 | 29 | 38 | 65 | 65 | 71 | 71 | 77 | 80 |
| NW | 30 | 30 | 30 | 48 | 50 | 68 | 69 | 69 | 71 | 71 |
| NNW | 30 | 30 | 30 | 48 | 50 | 68 | 69 | 69 | 71 | 71 |
| N | 29 | 30 | 30 | 30 | 30 | 30 | 62 | 62 | 62 | 74 |
| NNE | 24 | 24 | 35 | 35 | 53 | 53 | 82 | 82 | 82 | 82 |
| NE | 7 | 13 | 35 | 44 | 44 | 50 | 78 | 88 | 99 | 100 |
| ENE | 4 | 23 | 35 | 38 | 53 | 62 | 74 | 80 | 99 | 100 |
| E | 1 | 24 | 24 | 24 | 57 | 68 | 68 | 74 | 84 | 84 |
| ESE | 1 | 1 | 13 | 35 | 62 | 62 | 62 | 65 | 71 | 71 |
| SE | 7 | 20 | 20 | 44 | 67 | 67 | 67 | 67 | 67 | 67 |
| SSE | 7 | 38 | 38 | 38 | 47 | 62 | 62 | 62 | 62 | 62 |

Calculations of relative air concentrations and deposition are made for gridded receptor distances per sector. The "no decay" assumption is used in the XOQDOQ model.

### 6.0.3.2 METEOROLOGICAL DATA

Five years (1988-1992) of hourly, onsite meteorological data are used to produce the joint frequency distributions of wind speed and direction per stability class. The 10 m level winds are used. It is these joint frequency distributions which are input to the XOQDOQ model. XOQDOQ extrapolates the 10 m wind speed to the release height during the elevated portion of mixed-mode releases. Hours of calm winds are distributed by direction with the same frequency as the lowest "noncalm" wind speed class [KOPT(1)=1]. Thus, wind speed classes are established so that the lowest wind speed class is the starting threshold of the anemometer (i.e. the "calm" wind speed class). The largest wind speed class has the upper bound of (5 m/s + max hourly wind speed). Stability classes (A-G) are based on the vertical temperature gradient, measured by the hourly averaged delta-T variable.

### 6.0.3.3 ANNUAL XOQDOQ COMPARISON TO THE ODCM

Each year, the prevailing winds and stability class frequencies for ONS are compared to the 5-year period (1988-1992) upon which the χ/Q and D/Q calculations have been made. The 5-year climatology is summarized in Table 6.0-5 and Table 6.0-6 below. Since the comparison is being made to a 5-year climatology, significant differences should not occur in the meteorological variables of concern (i.e. winds and delta-T). The meteorological comparison serves to verify this assumption.

**Table 6.0-5**
**ONS Atmospheric Stability Frequency (1988-1992)**

| | A | B | C | D | E | F | G |
|---|---|---|---|---|---|---|---|
| Frequency (%) | 8.8 | 5.6 | 6.2 | 40.4 | 32.5 | 5.0 | 1.4 |

**Table 6.0-6**
**ONS Frequency of Wind Direction (From) and Speed (1988-1992)**

| Sector | Wind Direction Frequency (%) | Wind Speed Class (m/s) | Wind Speed Frequency (%) |
|---|---|---|---|
| N | 5.3 | CALM | 1.0 |
| NNE | 5.2 | 0.45 - 0.74 m/s | 4.1 |
| NE | 9.0 | 0.75 - 0.99 m/s | 10.3 |
| ENE | 8.2 | 1.00 - 1.24 m/s | 10.9 |
| E | 5.2 | 1.25 - 1.49 m/s | 13.4 |
| ESE | 3.1 | 1.50 - 1.99 m/s | 18.3 |
| SE | 3.1 | 2.00 - 2.99 m/s | 22.2 |
| SSE | 3.5 | 3.00 - 3.99 m/s | 10.5 |
| S | 3.6 | 4.00 - 4.99 m/s | 4.9 |
| SSW | 8.6 | 5.00 - 5.99 m/s | 2.0 |
| SW | 11.8 | 6.00 - 7.99 m/s | 1.5 |
| WSW | 7.5 | 8.00 - 9.99 m/s | 0.3 |
| W | 5.2 | > 9.99 m/s | 0.5 |
| WNW | 7.0 | | |
| NW | 7.3 | | |
| NNW | 6.4 | | |

The joint frequency distributions of wind speed and direction versus atmospheric stability class are also determined from the annual data to provide input to the XOQDOQ model. Modeled χ/Q and D/Q values for the 1.0 mile Exclusion Area Boundary at ONS are compared to the maximum of the (1988-1992) χ/Q and D/Q values from all sectors. If

the newly calculated annual dispersion and deposition values do not result in a significant increase in the calculated offsite dose relative to the 10CFR50, Appendix I dose objectives then the 5-year $\chi/Q$ and D/Q values used in the Annual Radiological Effluent Release Report (ARERR) are not revised. An increase in calculated offsite dose that is greater than five percent of the 10CFR50, Appendix I dose objectives would be considered significant enough to warrant a change in the $\chi/Q$ and D/Q values used in the ARERR. If an increasing trend in the annual $\chi/Q$ and D/Q values compared to the 5-year values is noted then a revised set of 5-year $\chi/Q$ and D/Q values will be generated. These limiting values are listed in Table 6.0-7. The entire $\chi/Q$ and D/Q list based on directional sector and distance is given in Table 6.0-9 and Table 6.0-10.

**Table 6.0-7**
**ONS Maximum $\chi/Q$ and D/Q Values (1988-1992)**

| | **($\chi/Q$,s/m$^3$) (D/Q,1/m$^2$)** | **Distance** | **Sector** |
|---|---|---|---|
| Ground-level Release: Maximum $\chi/Q$ | 7.308E-06 | 1 mile EAB | SE |
| Ground-level Release: Maximum D/Q | 2.259E-08 | 1 mile EAB | NE |
| Mixed-mode Release: Maximum $\chi/Q$ | 1.672E-06 | 1 mile EAB | SW |
| Mixed-mode Release: Maximum D/Q | 1.295E-08 | 1 mile EAB | NE |

Note:
The Oconee meteorological instruments were relocated from the 46 m microwave tower to a new 60 m onsite meteorological tower in April 1988. The 60 m tower became operational at 1700 hours on April 23, 1988. Therefore, determination of atmospheric stability should use the 36 m separation criteria for the period February 24, 1977-April 22, 1988 shown in Table 6.0-8**.** Data starting on April 23, 1988 or later should use the 50 m separation criteria.

**Table 6.0-8**
**ONS Delta-T Ranges per Vertical Separation Distances**

| **Stability Class** | **36m separation Delta-T (between 46m-10m levels) FEB 24, 1977 - APRIL 18, 1988 (4/18/88 ending hour 1430)** | **50m separation Delta-T (between 60m-10m levels) Starting at hour 1700 on April 23, 1988.** |
|---|---|---|
| A | $dT \leq -0.68$ | $dT \leq -0.95$ |
| B | $-0.68 < dT \leq -0.61$ | $-0.95 < dT \leq -0.85$ |
| C | $-0.61 < dT \leq -0.54$ | $-0.85 < dT \leq -0.75$ |
| D | $-0.54 < dT \leq -0.18$ | $-0.75 < dT \leq -0.25$ |
| E | $-0.18 < dT \leq 0.54$ | $-0.25 < dT \leq 0.75$ |
| F | $0.54 < dT \leq 1.44$ | $0.75 < dT \leq 2.00$ |
| G | $1.44 < dT$ | $2.00 < dT$ |

## Table 6.0-9
**(page 1 of 2)**

## Oconee Semi-Elevated χ/Q Average Values (1988-1992) (sec/m$^3$)

| Sector | 1.0-1.5* | 1.5-2.0 | 2.0-2.5 | 2.5-3.0 | 3.0-3.5 | 3.5-4.0 | 4.0-4.5 | 4.5-5.0 |
|---|---|---|---|---|---|---|---|---|
| N | 5.220E-07 | 2.650E-07 | 1.594E-07 | 1.069E-07 | 7.719E-08 | 7.321E-08 | 5.665E-08 | 4.542E-08 |
| NNE | 8.379E-07 | 4.734E-07 | 2.690E-07 | 2.003E-07 | 1.385E-07 | 1.091E-07 | 8.379E-08 | 6.676E-08 |
| NE | 9.503E-07 | 6.350E-07 | 3.962E-07 | 2.535E-07 | 1.847E-07 | 1.497E-07 | 1.157E-07 | 9.246E-08 |
| ENE | 8.116E-07 | 4.856E-07 | 2.919E-07 | 2.196E-07 | 1.619E-07 | 1.239E-07 | 9.609E-08 | 7.720E-08 |
| E | 5.950E-07 | 3.202E-07 | 2.015E-07 | 2.270E-07 | 1.745E-07 | 1.292E-07 | 1.024E-07 | 8.308E-08 |
| ESE | 4.531E-07 | 3.300E-07 | 3.623E-07 | 4.020E-07 | 2.822E-07 | 2.109E-07 | 1.688E-07 | 1.405E-07 |
| SE | 7.505E-07 | 4.573E-07 | 5.490E-07 | 5.110E-07 | 3.560E-07 | 2.648E-07 | 2.063E-07 | 1.665E-07 |
| SSE | 1.419E-06 | 7.428E-07 | 4.527E-07 | 3.489E-07 | 2.866E-07 | 2.131E-07 | 1.659E-07 | 1.337E-07 |
| S | 1.170E-06 | 6.099E-07 | 3.701E-07 | 2.496E-07 | 1.810E-07 | 1.552E-07 | 1.218E-07 | 9.867E-08 |
| SSW | 1.214E-06 | 6.327E-07 | 3.564E-07 | 2.301E-07 | 1.621E-07 | 1.213E-07 | 9.481E-08 | 7.660E-08 |
| SW | 1.672E-06 | 7.285E-07 | 4.057E-07 | 2.720E-07 | 1.891E-07 | 1.400E-07 | 1.085E-07 | 8.708E-08 |
| WSW | 1.558E-06 | 6.820E-07 | 3.804E-07 | 2.438E-07 | 1.708E-07 | 1.271E-07 | 1.010E-07 | 8.114E-08 |
| W | 1.193E-06 | 5.214E-07 | 2.909E-07 | 1.867E-07 | 1.372E-07 | 1.032E-07 | 8.326E-08 | 6.654E-08 |
| WNW | 4.658E-07 | 2.480E-07 | 1.760E-07 | 1.482E-07 | 1.024E-07 | 7.695E-08 | 5.943E-08 | 4.796E-08 |
| NW | 4.831E-07 | 2.524E-07 | 1.965E-07 | 1.291E-07 | 9.959E-08 | 7.356E-08 | 5.682E-08 | 4.566E-08 |
| NNW | 5.375E-07 | 2.769E-07 | 2.128E-07 | 1.394E-07 | 1.072E-07 | 7.913E-08 | 6.110E-08 | 4.907E-08 |

* Units are in miles from the station. As discussed in Oconee UFSAR Section 2.1.1.3, the boundary for establishing gaseous effluent release limits is the exclusion area boundary (EAB). The EAB is at a radius of 1.0 mile from the station center. Each χ/Q value is calculated at the closest location for the sector, e.g., 1.672E-06 sec/m$^3$ is the χ/Q value at 1.0 mile (SW) from the station.

## Table 6.0-9
**(page 2 of 2)**

## Oconee Semi-Elevated D/Q Average Values (1988-1992)
## ($m^{-2}$)

| Sector | 1.0-1.5* | 1.5-2.0 | 2.0-2.5 | 2.5-3.0 | 3.0-3.5 | 3.5-4.0 | 4.0-4.5 | 4.5-5.0 |
|---|---|---|---|---|---|---|---|---|
| N | 2.890E-09 | 1.184E-09 | 6.225E-10 | 3.812E-10 | 2.586E-10 | 3.380E-10 | 2.510E-10 | 1.943E-10 |
| NNE | 9.113E-09 | 3.989E-09 | 2.013E-09 | 1.248E-09 | 8.235E-10 | 8.997E-10 | 6.667E-10 | 5.138E-10 |
| NE | 1.295E-08 | 5.666E-09 | 2.919E-09 | 1.729E-09 | 1.145E-09 | 1.224E-09 | 9.140E-10 | 7.067E-10 |
| ENE | 7.899E-09 | 3.385E-09 | 1.756E-09 | 1.095E-09 | 9.819E-10 | 7.671E-10 | 5.749E-10 | 4.466E-10 |
| E | 4.454E-09 | 1.775E-09 | 9.252E-10 | 7.164E-10 | 7.491E-10 | 5.267E-10 | 3.981E-10 | 3.125E-10 |
| ESE | 4.361E-09 | 1.838E-09 | 1.086E-09 | 1.322E-09 | 8.696E-10 | 6.161E-10 | 5.153E-10 | 4.139E-10 |
| SE | 3.397E-09 | 1.385E-09 | 8.341E-10 | 1.649E-09 | 1.080E-09 | 7.595E-10 | 5.629E-10 | 4.340E-10 |
| SSE | 3.333E-09 | 1.323E-09 | 6.920E-10 | 4.404E-10 | 7.307E-10 | 5.202E-10 | 3.922E-10 | 3.091E-10 |
| S | 3.192E-09 | 1.256E-09 | 6.530E-10 | 4.020E-10 | 2.788E-10 | 2.177E-10 | 1.759E-10 | 1.501E-10 |
| SSW | 5.190E-09 | 1.972E-09 | 9.899E-10 | 5.895E-10 | 3.928E-10 | 2.842E-10 | 2.192E-10 | 1.778E-10 |
| SW | 1.205E-08 | 4.399E-09 | 2.193E-09 | 1.299E-09 | 8.521E-10 | 6.028E-10 | 4.518E-10 | 3.546E-10 |
| WSW | 1.047E-08 | 3.824E-09 | 1.908E-09 | 1.127E-09 | 7.422E-10 | 5.277E-10 | 3.980E-10 | 3.145E-10 |
| W | 5.577E-09 | 2.044E-09 | 1.025E-09 | 6.094E-10 | 4.134E-10 | 3.405E-10 | 3.962E-10 | 3.052E-10 |
| WNW | 2.185E-09 | 9.042E-10 | 5.220E-10 | 6.464E-10 | 4.227E-10 | 3.188E-10 | 2.360E-10 | 1.868E-10 |
| NW | 2.097E-09 | 8.759E-10 | 5.225E-10 | 3.196E-10 | 4.521E-10 | 3.178E-10 | 2.353E-10 | 1.812E-10 |
| NNW | 2.461E-09 | 1.028E-09 | 6.219E-10 | 3.765E-10 | 5.128E-10 | 3.604E-10 | 2.667E-10 | 2.054E-10 |

* Units are in miles from the station. As discussed in Oconee UFSAR Section 2.1.1.3, the boundary for establishing gaseous effluent release limits is the exclusion area boundary (EAB). The EAB is defined as a 1 mile radius from the station center. Each D/Q value is calculated at the closest location for the sector, e.g., 1.205E-08 $m^{-2}$ is the D/Q value at 1.0 mile (SW) from the station.

## Table 6.0-10
**(page 1 of 2)**

## Oconee Ground Level χ/Q Average Values (1988-1992) (sec/m$^3$)

| Sector | 1.0-1.5* | 1.5-2.0 | 2.0-2.5 | 2.5-3.0 | 3.0-3.5 | 3.5-4.0 | 4.0-4.5 | 4.5-5.0 |
|---|---|---|---|---|---|---|---|---|
| N | 2.115E-06 | 8.389E-07 | 4.495E-07 | 2.822E-07 | 1.952E-07 | 1.443E-07 | 1.117E-07 | 8.961E-08 |
| NNE | 2.898E-06 | 1.137E-06 | 6.047E-07 | 3.775E-07 | 2.602E-07 | 1.916E-07 | 1.480E-07 | 1.184E-07 |
| NE | 3.886E-06 | 1.529E-06 | 8.158E-07 | 5.108E-07 | 3.529E-07 | 2.604E-07 | 2.015E-07 | 1.616E-07 |
| ENE | 3.226E-06 | 1.277E-06 | 6.848E-07 | 4.305E-07 | 2.983E-07 | 2.207E-07 | 1.711E-07 | 1.374E-07 |
| E | 3.522E-06 | 1.410E-06 | 7.658E-07 | 4.866E-07 | 3.400E-07 | 2.534E-07 | 1.977E-07 | 1.596E-07 |
| ESE | 5.964E-06 | 2.407E-06 | 1.321E-06 | 8.459E-07 | 5.950E-07 | 4.457E-07 | 3.493E-07 | 2.832E-07 |
| SE | 7.308E-06 | 2.972E-06 | 1.631E-06 | 1.044E-06 | 7.342E-07 | 5.497E-07 | 4.307E-07 | 3.490E-07 |
| SSE | 6.604E-06 | 2.657E-06 | 1.440E-06 | 9.117E-07 | 6.354E-07 | 4.723E-07 | 3.676E-07 | 2.962E-07 |
| S | 5.278E-06 | 2.121E-06 | 1.146E-06 | 7.237E-07 | 5.032E-07 | 3.734E-07 | 2.901E-07 | 2.335E-07 |
| SSW | 3.986E-06 | 1.589E-06 | 8.536E-07 | 5.370E-07 | 3.721E-07 | 2.753E-07 | 2.135E-07 | 1.714E-07 |
| SW | 4.108E-06 | 1.620E-06 | 8.628E-07 | 5.390E-07 | 3.715E-07 | 2.735E-07 | 2.112E-07 | 1.689E-07 |
| WSW | 3.804E-06 | 1.503E-06 | 8.018E-07 | 5.015E-07 | 3.460E-07 | 2.549E-07 | 1.970E-07 | 1.577E-07 |
| W | 2.978E-06 | 1.186E-06 | 6.361E-07 | 3.995E-07 | 2.765E-07 | 2.043E-07 | 1.583E-07 | 1.270E-07 |
| WNW | 2.201E-06 | 8.791E-07 | 4.726E-07 | 2.974E-07 | 2.062E-07 | 1.526E-07 | 1.183E-07 | 9.502E-08 |
| NW | 2.104E-06 | 8.385E-07 | 4.499E-07 | 2.826E-07 | 1.957E-07 | 1.447E-07 | 1.121E-07 | 8.991E-08 |
| NNW | 2.221E-06 | 8.860E-07 | 4.755E-07 | 2.988E-07 | 2.069E-07 | 1.529E-07 | 1.185E-07 | 9.508E-08 |

* Units are in miles from the station. As discussed in Oconee UFSAR Section 2.1.1.3, the boundary for establishing gaseous effluent release limits is the exclusion area boundary (EAB). The EAB is defined as a 1 mile radius from the station center. Each χ/Q value is calculated at the closest location for the sector, e.g., 4.108E-06 sec/m$^3$ is the χ/Q value at 1.0 mile (SW) from the station.

## Table 6.0-10
**(page 2 of 2)**

## Oconee Ground Level D/Q Average Values (1988-1992)
## ($m^{-2}$)

| Sector | 1.0-1.5* | 1.5-2.0 | 2.0-2.5 | 2.5-3.0 | 3.0-3.5 | 3.5-4.0 | 4.0-4.5 | 4.5-5.0 |
|---|---|---|---|---|---|---|---|---|
| N | 6.916E-09 | 2.484E-09 | 1.232E-09 | 7.255E-10 | 4.750E-10 | 3.342E-10 | 2.477E-10 | 1.909E-10 |
| NNE | 1.642E-08 | 5.897E-09 | 2.924E-09 | 1.722E-09 | 1.128E-09 | 7.934E-10 | 5.880E-10 | 4.531E-10 |
| NE | 2.259E-08 | 8.114E-09 | 4.024E-09 | 2.369E-09 | 1.551E-09 | 1.092E-09 | 8.090E-10 | 6.235E-10 |
| ENE | 1.428E-08 | 5.130E-09 | 2.544E-09 | 1.498E-09 | 9.810E-10 | 6.902E-10 | 5.115E-10 | 3.942E-10 |
| E | 9.899E-09 | 3.556E-09 | 1.763E-09 | 1.038E-09 | 6.798E-10 | 4.784E-10 | 3.545E-10 | 2.732E-10 |
| ESE | 1.336E-08 | 4.798E-09 | 2.379E-09 | 1.401E-09 | 9.174E-10 | 6.455E-10 | 4.784E-10 | 3.686E-10 |
| SE | 1.401E-08 | 5.034E-09 | 2.496E-09 | 1.470E-09 | 9.625E-10 | 6.772E-10 | 5.019E-10 | 3.868E-10 |
| SSE | 1.226E-08 | 4.404E-09 | 2.184E-09 | 1.286E-09 | 8.420E-10 | 5.925E-10 | 4.391E-10 | 3.384E-10 |
| S | 1.008E-08 | 3.620E-09 | 1.795E-09 | 1.057E-09 | 6.922E-10 | 4.871E-10 | 3.610E-10 | 2.782E-10 |
| SSW | 9.941E-09 | 3.571E-09 | 1.771E-09 | 1.043E-09 | 6.828E-10 | 4.804E-10 | 3.560E-10 | 2.744E-10 |
| SW | 1.717E-08 | 6.169E-09 | 3.059E-09 | 1.801E-09 | 1.180E-09 | 8.300E-10 | 6.151E-10 | 4.740E-10 |
| WSW | 1.574E-08 | 5.655E-09 | 2.804E-09 | 1.651E-09 | 1.081E-09 | 7.608E-10 | 5.638E-10 | 4.345E-10 |
| W | 9.988E-09 | 3.588E-09 | 1.779E-09 | 1.048E-09 | 6.860E-10 | 4.827E-10 | 3.577E-10 | 2.757E-10 |
| WNW | 5.953E-09 | 2.138E-09 | 1.060E-09 | 6.244E-10 | 4.088E-10 | 2.877E-10 | 2.132E-10 | 1.643E-10 |
| NW | 5.891E-09 | 2.116E-09 | 1.049E-09 | 6.179E-10 | 4.046E-10 | 2.847E-10 | 2.110E-10 | 1.626E-10 |
| NNW | 6.672E-09 | 2.397E-09 | 1.188E-09 | 6.998E-10 | 4.582E-10 | 3.224E-10 | 2.390E-10 | 1.841E-10 |

* Units are in miles from the station. As discussed in Oconee UFSAR Section 2.1.1.3, the boundary for establishing gaseous effluent release limits is the exclusion area boundary (EAB). The EAB is defined as a 1 mile radius from the station center. Each D/Q value is calculated at the closest location for the sector, e.g., 1.717E-08 $m^{-2}$ is the D/Q value at 1.0 mile (SW) from the station.

# 7.0 LICENSEE INITIATED CHANGES

All ODCM changes are reviewed by knowledgeable individual(s), and approved by the Station Manager. The changes do not adversely impact the accuracy or reliability of effluent, dose, or setpoint calculations.

**ODCM Revision 54 - Implementation Date: October 9, 2013**
ODCM Revision 54 was approved by the Station Manager on October 9, 2013.

Section 3 - Page 10
Revised the minimum RIA-37 setpoint methodology description to reflect changes made to HP/0/B/1000/060A (reference PIP O-12-010675) as follows:
"Low activity levels in the WGDTs can result in calculated setpoint values close to background. To prevent spurious alarms, if the 1&2 RIA-37 or 3 RIA-37 setpoint is calculated to be less than 2000 cpm, then the setpoint is established at 2000 cpm above background".

# APPENDIX A

## Dose Factors for Exposure to a Semi-Infinite Cloud of Noble Gases*

| Nuclide | $K_i$ Total Body mrem/yr/ $\mu Ci/m^3$ | $L_i$ Skin mrem/yr/ $\mu Ci/m^3$ | $M_i$ Gamma Air mrad/yr/ $\mu Ci/m^3$ | $N_i$ Beta Air mrad/yr/ $\mu Ci/m^3$ |
|---|---|---|---|---|
| AR-41 | 8.840E+03 | 2.690E+03 | 9.300E+03 | 3.280E+03 |
| KR-83M | 7.560E-02 | 0.000E+00 | 1.930E+01 | 2.880E+02 |
| KR-85M | 1.170E+03 | 1.460E+03 | 1.230E+03 | 1.970E+03 |
| KR-85 | 1.610E+01 | 1.340E+03 | 1.720E+01 | 1.950E+03 |
| KR-87 | 5.920E+03 | 9.730E+03 | 6.170E+03 | 1.030E+04 |
| KR-88 | 1.470E+04 | 2.370E+03 | 1.520E+04 | 2.930E+03 |
| KR-89 | 1.660E+04 | 1.010E+04 | 1.730E+04 | 1.060E+04 |
| KR-90 | 1.560E+04 | 7.290E+03 | 1.630E+04 | 7.830E+03 |
| XE-131M | 9.150E+01 | 4.760E+02 | 1.560E+02 | 1.110E+03 |
| XE-133M | 2.510E+02 | 9.940E+02 | 3.270E+02 | 1.480E+03 |
| XE-133 | 2.940E+02 | 3.060E+02 | 3.530E+02 | 1.050E+03 |
| XE-135M | 3.120E+03 | 7.110E+02 | 3.360E+03 | 7.390E+02 |
| XE-135 | 1.810E+03 | 1.860E+03 | 1.920E+03 | 2.460E+03 |
| XE-137 | 1.420E+03 | 1.220E+04 | 1.510E+03 | 1.270E+04 |
| XE-138 | 8.830E+03 | 4.130E+03 | 9.210E+03 | 4.750E+03 |

* Reference Regulatory Guide 1.109, Table B-1

# APPENDIX B

## $P_i$ Dose Factors for use in the Gaseous Release Rate Limit Calculations

| Agegroup: | CHILD | Pathway: | Inhalation (INHL) | | | Units: | mrem/yr / µCi/m$^3$ | |
|---|---|---|---|---|---|---|---|---|
| **Nuclide** | **Bone** | **Liver** | **Thyroid** | **Kidney** | **Lung** | **Gilli** | **Skin** | **Total Body** |
| H-3 | 0.000E+00 | 1.120E+03 | 1.120E+03 | 1.120E+03 | 1.120E+03 | 1.120E+03 | 0.000E+00 | 1.120E+03 |
| C-14 | 3.590E+04 | 6.730E+03 | 6.730E+03 | 6.730E+03 | 6.730E+03 | 6.730E+03 | 0.000E+00 | 6.730E+03 |
| NA-24 | 1.610E+04 | 1.610E+04 | 1.610E+04 | 1.610E+04 | 1.610E+04 | 1.610E+04 | 0.000E+00 | 1.610E+04 |
| P-32 | 2.600E+06 | 1.140E+05 | 0.000E+00 | 0.000E+00 | 0.000E+00 | 4.220E+04 | 0.000E+00 | 9.880E+04 |
| CR-51 | 0.000E+00 | 0.000E+00 | 8.550E+01 | 2.430E+01 | 1.700E+04 | 1.080E+03 | 0.000E+00 | 1.540E+02 |
| MN-54 | 0.000E+00 | 4.290E+04 | 0.000E+00 | 1.000E+04 | 1.580E+06 | 2.290E+04 | 0.000E+00 | 9.510E+03 |
| MN-56 | 0.000E+00 | 1.660E+00 | 0.000E+00 | 1.670E+00 | 1.310E+04 | 1.230E+05 | 0.000E+00 | 3.120E-01 |
| FE-55 | 4.740E+04 | 2.520E+04 | 0.000E+00 | 0.000E+00 | 1.110E+05 | 2.870E+03 | 0.000E+00 | 7.770E+03 |
| FE-59 | 2.070E+04 | 3.340E+04 | 0.000E+00 | 0.000E+00 | 1.270E+06 | 7.070E+04 | 0.000E+00 | 1.670E+04 |
| CO-58 | 0.000E+00 | 1.770E+03 | 0.000E+00 | 0.000E+00 | 1.110E+06 | 3.440E+04 | 0.000E+00 | 3.160E+03 |
| CO-60 | 0.000E+00 | 1.310E+04 | 0.000E+00 | 0.000E+00 | 7.070E+06 | 9.620E+04 | 0.000E+00 | 2.260E+04 |
| NI-63 | 8.210E+05 | 4.620E+04 | 0.000E+00 | 0.000E+00 | 2.750E+05 | 6.330E+03 | 0.000E+00 | 2.800E+04 |
| NI-65 | 2.990E+00 | 2.960E-01 | 0.000E+00 | 0.000E+00 | 8.180E+03 | 8.400E+04 | 0.000E+00 | 1.640E-01 |
| CU-64 | 0.000E+00 | 1.990E+00 | 0.000E+00 | 6.030E+00 | 9.580E+03 | 3.670E+04 | 0.000E+00 | 1.070E+00 |
| ZN-65 | 4.260E+04 | 1.130E+05 | 0.000E+00 | 7.140E+04 | 9.950E+05 | 1.630E+04 | 0.000E+00 | 7.030E+04 |
| ZN-69 | 6.700E-02 | 9.660E-02 | 0.000E+00 | 5.850E-02 | 1.420E+03 | 1.020E+04 | 0.000E+00 | 8.920E-03 |
| BR-83 | 0.000E+00 | 0.000E+00 | 0.000E+00 | 0.000E+00 | 0.000E+00 | 0.000E+00 | 0.000E+00 | 4.740E+02 |
| BR-84 | 0.000E+00 | 0.000E+00 | 0.000E+00 | 0.000E+00 | 0.000E+00 | 0.000E+00 | 0.000E+00 | 5.480E+02 |
| BR-85 | 0.000E+00 | 0.000E+00 | 0.000E+00 | 0.000E+00 | 0.000E+00 | 0.000E+00 | 0.000E+00 | 2.530E+01 |
| RB-86 | 0.000E+00 | 1.980E+05 | 0.000E+00 | 0.000E+00 | 0.000E+00 | 7.990E+03 | 0.000E+00 | 1.140E+05 |
| RB-88 | 0.000E+00 | 5.620E+02 | 0.000E+00 | 0.000E+00 | 0.000E+00 | 1.720E+01 | 0.000E+00 | 3.660E+02 |
| RB-89 | 0.000E+00 | 3.450E+02 | 0.000E+00 | 0.000E+00 | 0.000E+00 | 1.890E+00 | 0.000E+00 | 2.900E+02 |
| SR-89 | 5.990E+05 | 0.000E+00 | 0.000E+00 | 0.000E+00 | 2.160E+06 | 1.670E+05 | 0.000E+00 | 1.720E+04 |
| SR-90 | 1.010E+08 | 0.000E+00 | 0.000E+00 | 0.000E+00 | 1.480E+07 | 3.430E+05 | 0.000E+00 | 6.440E+06 |
| SR-91 | 1.210E+02 | 0.000E+00 | 0.000E+00 | 0.000E+00 | 5.330E+04 | 1.740E+05 | 0.000E+00 | 4.590E+00 |

# APPENDIX B

## $P_i$ Dose Factors for use in the Gaseous Release Rate Limit Calculations

| Agegroup: | CHILD | Pathway: | Inhalation (INHL) | | | Units: | mrem/yr / µCi/m$^3$ | |
|---|---|---|---|---|---|---|---|---|
| **Nuclide** | **Bone** | **Liver** | **Thyroid** | **Kidney** | **Lung** | **Gilli** | **Skin** | **Total Body** |
| SR-92 | 1.310E+01 | 0.000E+00 | 0.000E+00 | 0.000E+00 | 2.400E+04 | 2.420E+05 | 0.000E+00 | 5.250E-01 |
| Y-90 | 4.110E+03 | 0.000E+00 | 0.000E+00 | 0.000E+00 | 2.620E+05 | 2.680E+05 | 0.000E+00 | 1.110E+02 |
| Y-91 | 9.140E+05 | 0.000E+00 | 0.000E+00 | 0.000E+00 | 2.630E+06 | 1.840E+05 | 0.000E+00 | 2.440E+04 |
| Y-91M | 5.070E-01 | 0.000E+00 | 0.000E+00 | 0.000E+00 | 2.810E+03 | 1.720E+03 | 0.000E+00 | 1.840E-02 |
| Y-92 | 2.030E+01 | 0.000E+00 | 0.000E+00 | 0.000E+00 | 2.390E+04 | 2.390E+05 | 0.000E+00 | 5.810E-01 |
| Y-93 | 1.860E+02 | 0.000E+00 | 0.000E+00 | 0.000E+00 | 7.440E+04 | 3.880E+05 | 0.000E+00 | 5.110E+00 |
| ZR-95 | 1.900E+05 | 4.180E+04 | 0.000E+00 | 5.960E+04 | 2.230E+06 | 6.110E+04 | 0.000E+00 | 3.700E+04 |
| ZR-97 | 1.880E+02 | 2.720E+01 | 0.000E+00 | 3.880E+01 | 1.130E+05 | 3.510E+05 | 0.000E+00 | 1.600E+01 |
| NB-95 | 2.350E+04 | 9.180E+03 | 0.000E+00 | 8.620E+03 | 6.140E+05 | 3.700E+04 | 0.000E+00 | 6.550E+03 |
| MO-99 | 0.000E+00 | 1.720E+02 | 0.000E+00 | 3.920E+02 | 1.350E+05 | 1.270E+05 | 0.000E+00 | 4.260E+01 |
| TC-99M | 1.780E-03 | 3.480E-03 | 0.000E+00 | 5.070E-02 | 9.510E+02 | 4.810E+03 | 0.000E+00 | 5.770E-02 |
| TC-101 | 8.100E-05 | 8.510E-05 | 0.000E+00 | 1.450E-03 | 5.850E+02 | 1.630E+01 | 0.000E+00 | 1.080E-03 |
| RU-103 | 2.790E+03 | 0.000E+00 | 0.000E+00 | 7.030E+03 | 6.620E+05 | 4.480E+04 | 0.000E+00 | 1.070E+03 |
| RU-105 | 1.530E+00 | 0.000E+00 | 0.000E+00 | 1.340E+00 | 1.590E+04 | 9.950E+04 | 0.000E+00 | 5.550E-01 |
| RU-106 | 1.360E+05 | 0.000E+00 | 0.000E+00 | 1.840E+05 | 1.430E+07 | 4.290E+05 | 0.000E+00 | 1.690E+04 |
| AG-110M | 1.690E+04 | 1.140E+04 | 0.000E+00 | 2.120E+04 | 5.480E+06 | 1.000E+05 | 0.000E+00 | 9.140E+03 |
| TE-125M | 6.730E+03 | 2.330E+03 | 1.920E+03 | 0.000E+00 | 4.770E+05 | 3.380E+04 | 0.000E+00 | 9.140E+02 |
| TE-127 | 2.770E+00 | 9.510E-01 | 1.960E+00 | 7.070E+00 | 1.000E+04 | 5.620E+04 | 0.000E+00 | 6.100E-01 |
| TE-127M | 2.490E+04 | 8.550E+03 | 6.070E+03 | 6.360E+04 | 1.480E+06 | 7.140E+04 | 0.000E+00 | 3.020E+03 |
| TE-129 | 9.770E-02 | 3.500E-02 | 7.140E-02 | 2.570E-01 | 2.930E+03 | 2.550E+04 | 0.000E+00 | 2.380E-02 |
| TE-129M | 1.920E+04 | 6.840E+03 | 6.330E+03 | 5.030E+04 | 1.760E+06 | 1.820E+05 | 0.000E+00 | 3.040E+03 |
| TE-131 | 2.170E-02 | 8.440E-03 | 1.700E-02 | 5.880E-02 | 2.050E+03 | 1.330E+03 | 0.000E+00 | 6.590E-03 |
| TE-131M | 1.340E+02 | 5.920E+01 | 9.770E+01 | 4.000E+02 | 2.060E+05 | 3.080E+05 | 0.000E+00 | 5.070E+01 |
| TE-132 | 4.810E+02 | 2.720E+02 | 3.170E+02 | 1.770E+03 | 3.770E+05 | 1.380E+05 | 0.000E+00 | 2.630E+02 |
| I-130 | 8.180E+03 | 1.640E+04 | 1.850E+06 | 2.450E+04 | 0.000E+00 | 5.110E+03 | 0.000E+00 | 8.440E+03 |

# APPENDIX B

## $P_i$ Dose Factors for use in the Gaseous Release Rate Limit Calculations

| Agegroup: | CHILD | Pathway: | Inhalation (INHL) | | | Units: | mrem/yr / µCi/m$^3$ | |
|---|---|---|---|---|---|---|---|---|
| **Nuclide** | **Bone** | **Liver** | **Thyroid** | **Kidney** | **Lung** | **Gilli** | **Skin** | **Total Body** |
| I-131 | 4.810E+04 | 4.810E+04 | 1.620E+07 | 7.880E+04 | 0.000E+00 | 2.840E+03 | 0.000E+00 | 2.730E+04 |
| I-132 | 2.120E+03 | 4.070E+03 | 1.940E+05 | 6.250E+03 | 0.000E+00 | 3.200E+03 | 0.000E+00 | 1.880E+03 |
| I-133 | 1.660E+04 | 2.030E+04 | 3.850E+06 | 3.380E+04 | 0.000E+00 | 5.480E+03 | 0.000E+00 | 7.700E+03 |
| I-134 | 1.170E+03 | 2.160E+03 | 5.070E+04 | 3.300E+03 | 0.000E+00 | 9.550E+02 | 0.000E+00 | 9.950E+02 |
| I-135 | 4.920E+03 | 8.730E+03 | 7.920E+05 | 1.340E+04 | 0.000E+00 | 4.440E+03 | 0.000E+00 | 4.140E+03 |
| CS-134 | 6.510E+05 | 1.010E+06 | 0.000E+00 | 3.300E+05 | 1.210E+05 | 3.850E+03 | 0.000E+00 | 2.250E+05 |
| CS-136 | 6.510E+04 | 1.710E+05 | 0.000E+00 | 9.550E+04 | 1.450E+04 | 4.180E+03 | 0.000E+00 | 1.160E+05 |
| CS-137 | 9.060E+05 | 8.250E+05 | 0.000E+00 | 2.820E+05 | 1.040E+05 | 3.620E+03 | 0.000E+00 | 1.280E+05 |
| CS-138 | 6.330E+02 | 8.400E+02 | 0.000E+00 | 6.220E+02 | 6.810E+01 | 2.700E+02 | 0.000E+00 | 5.550E+02 |
| BA-139 | 1.840E+00 | 9.840E-04 | 0.000E+00 | 8.620E-04 | 5.770E+03 | 5.770E+04 | 0.000E+00 | 5.360E-02 |
| BA-140 | 7.400E+04 | 6.480E+01 | 0.000E+00 | 2.110E+01 | 1.740E+06 | 1.020E+05 | 0.000E+00 | 4.330E+03 |
| BA-141 | 1.960E-01 | 1.090E-04 | 0.000E+00 | 9.470E-05 | 2.920E+03 | 2.750E+02 | 0.000E+00 | 6.360E-03 |
| BA-142 | 5.000E-02 | 3.600E-05 | 0.000E+00 | 2.910E-05 | 1.640E+03 | 2.740E+00 | 0.000E+00 | 2.790E-03 |
| LA-140 | 6.440E+02 | 2.250E+02 | 0.000E+00 | 0.000E+00 | 1.830E+05 | 2.260E+05 | 0.000E+00 | 7.550E+01 |
| LA-142 | 1.300E+00 | 4.110E-01 | 0.000E+00 | 0.000E+00 | 8.700E+03 | 7.580E+04 | 0.000E+00 | 1.290E-01 |
| CE-141 | 3.920E+04 | 1.950E+04 | 0.000E+00 | 8.550E+03 | 5.440E+05 | 5.660E+04 | 0.000E+00 | 2.900E+03 |
| CE-143 | 3.660E+02 | 1.990E+02 | 0.000E+00 | 8.360E+01 | 1.150E+05 | 1.270E+05 | 0.000E+00 | 2.870E+01 |
| CE-144 | 6.770E+06 | 2.120E+06 | 0.000E+00 | 1.170E+06 | 1.200E+07 | 3.880E+05 | 0.000E+00 | 3.610E+05 |
| PR-143 | 1.850E+04 | 5.550E+03 | 0.000E+00 | 3.000E+03 | 4.330E+05 | 9.730E+04 | 0.000E+00 | 9.140E+02 |
| PR-144 | 5.960E-02 | 1.850E-02 | 0.000E+00 | 9.770E-03 | 1.570E+03 | 1.970E+02 | 0.000E+00 | 3.000E-03 |
| ND-147 | 1.080E+04 | 8.730E+03 | 0.000E+00 | 4.810E+03 | 3.280E+05 | 8.210E+04 | 0.000E+00 | 6.810E+02 |
| W-187 | 1.630E+01 | 9.660E+00 | 0.000E+00 | 0.000E+00 | 4.110E+04 | 9.100E+04 | 0.000E+00 | 4.330E+00 |
| NP-239 | 4.660E+02 | 3.340E+01 | 0.000E+00 | 9.730E+01 | 5.810E+04 | 6.400E+04 | 0.000E+00 | 2.350E+01 |

# APPENDIX C

## $A_i$ Adult Dose Factors for use in the Liquid Dose Calculations

| Agegroup: | ADULT | Pathway: | Potable Water (PWtr) | | | Units: | mrem/hr / µCi/ml | |
|---|---|---|---|---|---|---|---|---|
| **Nuclide** | **Bone** | **Liver** | **Thyroid** | **Kidney** | **Lung** | **Gilli** | **Skin** | **Total Body** |
| H-3 | 0.000E+00 | 8.740E+00 | 8.740E+00 | 8.740E+00 | 8.740E+00 | 8.740E+00 | 0.000E+00 | 8.740E+00 |
| C-14 | 2.360E+02 | 4.730E+01 | 4.730E+01 | 4.730E+01 | 4.730E+01 | 4.730E+01 | 0.000E+00 | 4.730E+01 |
| NA-24 | 8.140E+01 | 8.140E+01 | 8.140E+01 | 8.140E+01 | 8.140E+01 | 8.140E+01 | 0.000E+00 | 8.140E+01 |
| P-32 | 1.570E+04 | 9.750E+02 | 0.000E+00 | 0.000E+00 | 0.000E+00 | 1.760E+03 | 0.000E+00 | 6.060E+02 |
| CR-51 | 0.000E+00 | 0.000E+00 | 1.310E-01 | 4.820E-02 | 2.900E-01 | 5.500E+01 | 0.000E+00 | 2.190E-01 |
| MN-54 | 0.000E+00 | 3.800E+02 | 0.000E+00 | 1.130E+02 | 0.000E+00 | 1.160E+03 | 0.000E+00 | 7.250E+01 |
| MN-56 | 0.000E+00 | 3.800E-01 | 0.000E+00 | 4.820E-01 | 0.000E+00 | 1.210E+01 | 0.000E+00 | 6.740E-02 |
| FE-55 | 2.290E+02 | 1.580E+02 | 0.000E+00 | 0.000E+00 | 8.820E+01 | 9.070E+01 | 0.000E+00 | 3.690E+01 |
| FE-59 | 3.580E+02 | 8.420E+02 | 0.000E+00 | 0.000E+00 | 2.350E+02 | 2.810E+03 | 0.000E+00 | 3.230E+02 |
| CO-58 | 0.000E+00 | 6.170E+01 | 0.000E+00 | 0.000E+00 | 0.000E+00 | 1.250E+03 | 0.000E+00 | 1.380E+02 |
| CO-60 | 0.000E+00 | 1.780E+02 | 0.000E+00 | 0.000E+00 | 0.000E+00 | 3.340E+03 | 0.000E+00 | 3.930E+02 |
| NI-63 | 1.080E+04 | 7.500E+02 | 0.000E+00 | 0.000E+00 | 0.000E+00 | 1.560E+02 | 0.000E+00 | 3.630E+02 |
| NI-65 | 1.620E+00 | 2.100E-01 | 0.000E+00 | 0.000E+00 | 0.000E+00 | 5.340E+00 | 0.000E+00 | 9.600E-02 |
| CU-64 | 0.000E+00 | 3.590E+00 | 0.000E+00 | 9.060E+00 | 0.000E+00 | 3.060E+02 | 0.000E+00 | 1.690E+00 |
| ZN-65 | 4.020E+02 | 1.280E+03 | 0.000E+00 | 8.560E+02 | 0.000E+00 | 8.060E+02 | 0.000E+00 | 5.780E+02 |
| ZN-69 | 1.070E-04 | 2.050E-04 | 0.000E+00 | 1.330E-04 | 0.000E+00 | 3.080E-05 | 0.000E+00 | 1.430E-05 |
| BR-83 | 0.000E+00 | 0.000E+00 | 0.000E+00 | 0.000E+00 | 0.000E+00 | 1.480E-01 | 0.000E+00 | 1.030E-01 |
| BR-84 | 0.000E+00 | 0.000E+00 | 0.000E+00 | 0.000E+00 | 0.000E+00 | 5.270E-12 | 0.000E+00 | 6.710E-07 |
| BR-85 | 0.000E+00 | 0.000E+00 | 0.000E+00 | 0.000E+00 | 0.000E+00 | 0.000E+00 | 0.000E+00 | 4.380E-77 |
| RB-86 | 0.000E+00 | 1.720E+03 | 0.000E+00 | 0.000E+00 | 0.000E+00 | 3.400E+02 | 0.000E+00 | 8.030E+02 |
| RB-88 | 0.000E+00 | 3.360E-12 | 0.000E+00 | 0.000E+00 | 0.000E+00 | 4.640E-23 | 0.000E+00 | 1.780E-12 |
| RB-89 | 0.000E+00 | 3.090E-14 | 0.000E+00 | 0.000E+00 | 0.000E+00 | 1.790E-27 | 0.000E+00 | 2.170E-14 |
| SR-89 | 2.550E+04 | 0.000E+00 | 0.000E+00 | 0.000E+00 | 0.000E+00 | 4.080E+03 | 0.000E+00 | 7.310E+02 |
| SR-90 | 6.310E+05 | 0.000E+00 | 0.000E+00 | 0.000E+00 | 0.000E+00 | 1.820E+04 | 0.000E+00 | 1.550E+05 |
| SR-91 | 1.960E+02 | 0.000E+00 | 0.000E+00 | 0.000E+00 | 0.000E+00 | 9.350E+02 | 0.000E+00 | 7.930E+00 |

# APPENDIX C

## $A_i$ Adult Dose Factors for use in the Liquid Dose Calculations

| Agegroup: | ADULT | Pathway: | Potable Water (PWtr) | | | Units: | mrem/hr / µCi/ml | |
|---|---|---|---|---|---|---|---|---|
| **Nuclide** | **Bone** | **Liver** | **Thyroid** | **Kidney** | **Lung** | **Gilli** | **Skin** | **Total Body** |
| SR-92 | 8.290E+00 | 0.000E+00 | 0.000E+00 | 0.000E+00 | 0.000E+00 | 1.640E+02 | 0.000E+00 | 3.590E-01 |
| Y-90 | 7.030E-01 | 0.000E+00 | 0.000E+00 | 0.000E+00 | 0.000E+00 | 7.460E+03 | 0.000E+00 | 1.890E-02 |
| Y-91 | 1.170E+01 | 0.000E+00 | 0.000E+00 | 0.000E+00 | 0.000E+00 | 6.420E+03 | 0.000E+00 | 3.120E-01 |
| Y-91M | 3.360E-07 | 0.000E+00 | 0.000E+00 | 0.000E+00 | 0.000E+00 | 9.860E-07 | 0.000E+00 | 1.300E-08 |
| Y-92 | 6.710E-03 | 0.000E+00 | 0.000E+00 | 0.000E+00 | 0.000E+00 | 1.170E+02 | 0.000E+00 | 1.960E-04 |
| Y-93 | 9.770E-02 | 0.000E+00 | 0.000E+00 | 0.000E+00 | 0.000E+00 | 3.100E+03 | 0.000E+00 | 2.700E-03 |
| ZR-95 | 2.520E+00 | 8.070E-01 | 0.000E+00 | 1.270E+00 | 0.000E+00 | 2.560E+03 | 0.000E+00 | 5.460E-01 |
| ZR-97 | 8.540E-02 | 1.720E-02 | 0.000E+00 | 2.600E-02 | 0.000E+00 | 5.340E+03 | 0.000E+00 | 7.880E-03 |
| NB-95 | 5.130E-01 | 2.850E-01 | 0.000E+00 | 2.820E-01 | 0.000E+00 | 1.730E+03 | 0.000E+00 | 1.530E-01 |
| MO-99 | 0.000E+00 | 3.160E+02 | 0.000E+00 | 7.160E+02 | 0.000E+00 | 7.330E+02 | 0.000E+00 | 6.020E+01 |
| TC-99M | 5.160E-03 | 1.460E-02 | 0.000E+00 | 2.210E-01 | 7.140E-03 | 8.630E+00 | 0.000E+00 | 1.860E-01 |
| TC-101 | 1.130E-17 | 1.630E-17 | 0.000E+00 | 2.930E-16 | 8.320E-18 | 4.890E-29 | 0.000E+00 | 1.600E-16 |
| RU-103 | 1.530E+01 | 0.000E+00 | 0.000E+00 | 5.820E+01 | 0.000E+00 | 1.780E+03 | 0.000E+00 | 6.570E+00 |
| RU-105 | 1.970E-01 | 0.000E+00 | 0.000E+00 | 2.540E+00 | 0.000E+00 | 1.200E+02 | 0.000E+00 | 7.760E-02 |
| RU-106 | 2.290E+02 | 0.000E+00 | 0.000E+00 | 4.410E+02 | 0.000E+00 | 1.480E+04 | 0.000E+00 | 2.890E+01 |
| AG-110M | 1.330E+01 | 1.230E+01 | 0.000E+00 | 2.420E+01 | 0.000E+00 | 5.020E+03 | 0.000E+00 | 7.300E+00 |
| TE-125M | 2.220E+02 | 8.030E+01 | 6.670E+01 | 9.020E+02 | 0.000E+00 | 8.850E+02 | 0.000E+00 | 2.970E+01 |
| TE-127 | 3.780E+00 | 1.360E+00 | 2.800E+00 | 1.540E+01 | 0.000E+00 | 2.980E+02 | 0.000E+00 | 8.170E-01 |
| TE-127M | 5.620E+02 | 2.010E+02 | 1.440E+02 | 2.280E+03 | 0.000E+00 | 1.880E+03 | 0.000E+00 | 6.840E+01 |
| TE-129 | 1.920E-03 | 7.230E-04 | 1.480E-03 | 8.080E-03 | 0.000E+00 | 1.450E-03 | 0.000E+00 | 4.690E-04 |
| TE-129M | 9.470E+02 | 3.530E+02 | 3.250E+02 | 3.950E+03 | 0.000E+00 | 4.770E+03 | 0.000E+00 | 1.500E+02 |
| TE-131 | 3.520E-09 | 1.470E-09 | 2.900E-09 | 1.540E-08 | 0.000E+00 | 4.990E-10 | 0.000E+00 | 1.110E-09 |
| TE-131M | 1.090E+02 | 5.340E+01 | 8.450E+01 | 5.400E+02 | 0.000E+00 | 5.300E+03 | 0.000E+00 | 4.450E+01 |
| TE-132 | 1.880E+02 | 1.220E+02 | 1.350E+02 | 1.170E+03 | 0.000E+00 | 5.770E+03 | 0.000E+00 | 1.140E+02 |
| I-130 | 3.210E+01 | 9.460E+01 | 8.020E+03 | 1.480E+02 | 0.000E+00 | 8.140E+01 | 0.000E+00 | 3.730E+01 |

# APPENDIX C

## $A_i$ Adult Dose Factors for use in the Liquid Dose Calculations

| Agegroup: | ADULT | Pathway: | Potable Water (PWtr) | | | Units: | mrem/hr / µCi/ml | |
|---|---|---|---|---|---|---|---|---|
| **Nuclide** | **Bone** | **Liver** | **Thyroid** | **Kidney** | **Lung** | **Gilli** | **Skin** | **Total Body** |
| I-131 | 3.320E+02 | 4.740E+02 | 1.550E+05 | 8.130E+02 | 0.000E+00 | 1.250E+02 | 0.000E+00 | 2.720E+02 |
| I-132 | 4.540E-01 | 1.220E+00 | 4.250E+01 | 1.940E+00 | 0.000E+00 | 2.280E-01 | 0.000E+00 | 4.250E-01 |
| I-133 | 7.920E+01 | 1.380E+02 | 2.020E+04 | 2.400E+02 | 0.000E+00 | 1.240E+02 | 0.000E+00 | 4.200E+01 |
| I-134 | 6.580E-04 | 1.790E-03 | 3.100E-02 | 2.840E-03 | 0.000E+00 | 1.560E-06 | 0.000E+00 | 6.390E-04 |
| I-135 | 1.050E+01 | 2.750E+01 | 1.810E+03 | 4.400E+01 | 0.000E+00 | 3.100E+01 | 0.000E+00 | 1.010E+01 |
| CS-134 | 5.170E+03 | 1.230E+04 | 0.000E+00 | 3.980E+03 | 1.320E+03 | 2.150E+02 | 0.000E+00 | 1.010E+04 |
| CS-136 | 5.280E+02 | 2.080E+03 | 0.000E+00 | 1.160E+03 | 1.590E+02 | 2.370E+02 | 0.000E+00 | 1.500E+03 |
| CS-137 | 6.630E+03 | 9.070E+03 | 0.000E+00 | 3.080E+03 | 1.020E+03 | 1.760E+02 | 0.000E+00 | 5.940E+03 |
| CS-138 | 8.450E-07 | 1.670E-06 | 0.000E+00 | 1.230E-06 | 1.210E-07 | 7.120E-12 | 0.000E+00 | 8.260E-07 |
| BA-139 | 1.990E-02 | 1.420E-05 | 0.000E+00 | 1.330E-05 | 8.050E-06 | 3.530E-02 | 0.000E+00 | 5.830E-04 |
| BA-140 | 1.640E+03 | 2.070E+00 | 0.000E+00 | 7.020E-01 | 1.180E+00 | 3.390E+03 | 0.000E+00 | 1.080E+02 |
| BA-141 | 5.440E-12 | 4.120E-15 | 0.000E+00 | 3.830E-15 | 2.340E-15 | 2.570E-21 | 0.000E+00 | 1.840E-13 |
| BA-142 | 6.290E-21 | 6.470E-24 | 0.000E+00 | 5.460E-24 | 3.660E-24 | 8.860E-39 | 0.000E+00 | 3.960E-22 |
| LA-140 | 1.690E-01 | 8.530E-02 | 0.000E+00 | 0.000E+00 | 0.000E+00 | 6.260E+03 | 0.000E+00 | 2.250E-02 |
| LA-142 | 5.720E-05 | 2.600E-05 | 0.000E+00 | 0.000E+00 | 0.000E+00 | 1.900E-01 | 0.000E+00 | 6.480E-06 |
| CE-141 | 7.710E-01 | 5.210E-01 | 0.000E+00 | 2.420E-01 | 0.000E+00 | 1.990E+03 | 0.000E+00 | 5.910E-02 |
| CE-143 | 1.070E-01 | 7.890E+01 | 0.000E+00 | 3.470E-02 | 0.000E+00 | 2.950E+03 | 0.000E+00 | 8.730E-03 |
| CE-144 | 4.060E+01 | 1.700E+01 | 0.000E+00 | 1.010E+01 | 0.000E+00 | 1.370E+04 | 0.000E+00 | 2.180E+00 |
| PR-143 | 7.460E-01 | 2.990E-01 | 0.000E+00 | 1.730E-01 | 0.000E+00 | 3.270E+03 | 0.000E+00 | 3.700E-02 |
| PR-144 | 7.350E-16 | 3.050E-16 | 0.000E+00 | 1.720E-16 | 0.000E+00 | 1.060E-22 | 0.000E+00 | 3.730E-17 |
| ND-147 | 5.070E-01 | 5.860E-01 | 0.000E+00 | 3.430E-01 | 0.000E+00 | 2.810E+03 | 0.000E+00 | 3.510E-02 |
| W-187 | 6.050E+00 | 5.050E+00 | 0.000E+00 | 0.000E+00 | 0.000E+00 | 1.660E+03 | 0.000E+00 | 1.770E+00 |
| NP-239 | 8.550E-02 | 8.400E-03 | 0.000E+00 | 2.620E-02 | 0.000E+00 | 1.720E+03 | 0.000E+00 | 4.630E-03 |

# APPENDIX C

## $A_i$ Adult Dose Factors for use in the Liquid Dose Calculations

| Agegroup: | ADULT | Pathway: | Fresh Water Fish - Sport (FFSP) | | | Units: | mrem/hr / µCi/ml | |
|---|---|---|---|---|---|---|---|---|
| **Nuclide** | **Bone** | **Liver** | **Thyroid** | **Kidney** | **Lung** | **Gilli** | **Skin** | **Total Body** |
| H-3 | 0.000E+00 | 2.260E-01 | 2.260E-01 | 2.260E-01 | 2.260E-01 | 2.260E-01 | 0.000E+00 | 2.260E-01 |
| C-14 | 3.130E+04 | 6.260E+03 | 6.260E+03 | 6.260E+03 | 6.260E+03 | 6.260E+03 | 0.000E+00 | 6.260E+03 |
| NA-24 | 1.350E+02 | 1.350E+02 | 1.350E+02 | 1.350E+02 | 1.350E+02 | 1.350E+02 | 0.000E+00 | 1.350E+02 |
| P-32 | 1.320E+06 | 8.210E+04 | 0.000E+00 | 0.000E+00 | 0.000E+00 | 1.480E+05 | 0.000E+00 | 5.100E+04 |
| CR-51 | 0.000E+00 | 0.000E+00 | 7.420E-01 | 2.740E-01 | 1.650E+00 | 3.120E+02 | 0.000E+00 | 1.240E+00 |
| MN-54 | 0.000E+00 | 4.370E+03 | 0.000E+00 | 1.300E+03 | 0.000E+00 | 1.340E+04 | 0.000E+00 | 8.330E+02 |
| MN-56 | 0.000E+00 | 1.730E-01 | 0.000E+00 | 2.200E-01 | 0.000E+00 | 5.530E+00 | 0.000E+00 | 3.070E-02 |
| FE-55 | 6.580E+02 | 4.550E+02 | 0.000E+00 | 0.000E+00 | 2.540E+02 | 2.610E+02 | 0.000E+00 | 1.060E+02 |
| FE-59 | 1.020E+03 | 2.400E+03 | 0.000E+00 | 0.000E+00 | 6.720E+02 | 8.010E+03 | 0.000E+00 | 9.220E+02 |
| CO-58 | 0.000E+00 | 8.830E+01 | 0.000E+00 | 0.000E+00 | 0.000E+00 | 1.790E+03 | 0.000E+00 | 1.980E+02 |
| CO-60 | 0.000E+00 | 2.560E+02 | 0.000E+00 | 0.000E+00 | 0.000E+00 | 4.810E+03 | 0.000E+00 | 5.650E+02 |
| NI-63 | 3.110E+04 | 2.160E+03 | 0.000E+00 | 0.000E+00 | 0.000E+00 | 4.500E+02 | 0.000E+00 | 1.040E+03 |
| NI-65 | 1.720E-01 | 2.230E-02 | 0.000E+00 | 0.000E+00 | 0.000E+00 | 5.660E-01 | 0.000E+00 | 1.020E-02 |
| CU-64 | 0.000E+00 | 2.680E+00 | 0.000E+00 | 6.760E+00 | 0.000E+00 | 2.290E+02 | 0.000E+00 | 1.260E+00 |
| ZN-65 | 2.310E+04 | 7.350E+04 | 0.000E+00 | 4.920E+04 | 0.000E+00 | 4.630E+04 | 0.000E+00 | 3.320E+04 |
| ZN-69 | 7.730E-07 | 1.480E-06 | 0.000E+00 | 9.610E-07 | 0.000E+00 | 2.220E-07 | 0.000E+00 | 1.030E-07 |
| BR-83 | 0.000E+00 | 0.000E+00 | 0.000E+00 | 0.000E+00 | 0.000E+00 | 5.500E-02 | 0.000E+00 | 3.820E-02 |
| BR-84 | 0.000E+00 | 0.000E+00 | 0.000E+00 | 0.000E+00 | 0.000E+00 | 9.850E-18 | 0.000E+00 | 1.250E-12 |
| BR-85 | 0.000E+00 | 0.000E+00 | 0.000E+00 | 0.000E+00 | 0.000E+00 | 0.000E+00 | 0.000E+00 | 0.000E+00 |
| RB-86 | 0.000E+00 | 9.730E+04 | 0.000E+00 | 0.000E+00 | 0.000E+00 | 1.920E+04 | 0.000E+00 | 4.530E+04 |
| RB-88 | 0.000E+00 | 1.290E-22 | 0.000E+00 | 0.000E+00 | 0.000E+00 | 1.780E-33 | 0.000E+00 | 6.830E-23 |
| RB-89 | 0.000E+00 | 1.640E-26 | 0.000E+00 | 0.000E+00 | 0.000E+00 | 9.560E-40 | 0.000E+00 | 1.160E-26 |
| SR-89 | 2.180E+04 | 0.000E+00 | 0.000E+00 | 0.000E+00 | 0.000E+00 | 3.500E+03 | 0.000E+00 | 6.260E+02 |
| SR-90 | 5.440E+05 | 0.000E+00 | 0.000E+00 | 0.000E+00 | 0.000E+00 | 1.570E+04 | 0.000E+00 | 1.340E+05 |
| SR-91 | 7.050E+01 | 0.000E+00 | 0.000E+00 | 0.000E+00 | 0.000E+00 | 3.360E+02 | 0.000E+00 | 2.850E+00 |

# APPENDIX C

## $A_i$ Adult Dose Factors for use in the Liquid Dose Calculations

| Agegroup: | ADULT | Pathway: | Fresh Water Fish - Sport (FFSP) | | | Units: | mrem/hr / µCi/ml | |
|---|---|---|---|---|---|---|---|---|
| **Nuclide** | **Bone** | **Liver** | **Thyroid** | **Kidney** | **Lung** | **Gilli** | **Skin** | **Total Body** |
| SR-92 | 3.320E-01 | 0.000E+00 | 0.000E+00 | 0.000E+00 | 0.000E+00 | 6.570E+00 | 0.000E+00 | 1.430E-02 |
| Y-90 | 4.440E-01 | 0.000E+00 | 0.000E+00 | 0.000E+00 | 0.000E+00 | 4.710E+03 | 0.000E+00 | 1.190E-02 |
| Y-91 | 8.340E+00 | 0.000E+00 | 0.000E+00 | 0.000E+00 | 0.000E+00 | 4.590E+03 | 0.000E+00 | 2.230E-01 |
| Y-91M | 1.070E-11 | 0.000E+00 | 0.000E+00 | 0.000E+00 | 0.000E+00 | 3.150E-11 | 0.000E+00 | 4.150E-13 |
| Y-92 | 4.600E-04 | 0.000E+00 | 0.000E+00 | 0.000E+00 | 0.000E+00 | 8.060E+00 | 0.000E+00 | 1.340E-05 |
| Y-93 | 3.080E-02 | 0.000E+00 | 0.000E+00 | 0.000E+00 | 0.000E+00 | 9.770E+02 | 0.000E+00 | 8.500E-04 |
| ZR-95 | 2.380E-01 | 7.620E-02 | 0.000E+00 | 1.200E-01 | 0.000E+00 | 2.410E+02 | 0.000E+00 | 5.160E-02 |
| ZR-97 | 4.960E-03 | 1.000E-03 | 0.000E+00 | 1.510E-03 | 0.000E+00 | 3.100E+02 | 0.000E+00 | 4.570E-04 |
| NB-95 | 4.380E+02 | 2.440E+02 | 0.000E+00 | 2.410E+02 | 0.000E+00 | 1.480E+06 | 0.000E+00 | 1.310E+02 |
| MO-99 | 0.000E+00 | 8.020E+01 | 0.000E+00 | 1.820E+02 | 0.000E+00 | 1.860E+02 | 0.000E+00 | 1.530E+01 |
| TC-99M | 5.590E-04 | 1.580E-03 | 0.000E+00 | 2.400E-02 | 7.740E-04 | 9.340E-01 | 0.000E+00 | 2.010E-02 |
| TC-101 | 2.610E-33 | 3.760E-33 | 0.000E+00 | 6.770E-32 | 1.920E-33 | 1.130E-44 | 0.000E+00 | 3.690E-32 |
| RU-103 | 4.350E+00 | 0.000E+00 | 0.000E+00 | 1.660E+01 | 0.000E+00 | 5.080E+02 | 0.000E+00 | 1.870E+00 |
| RU-105 | 8.670E-03 | 0.000E+00 | 0.000E+00 | 1.120E-01 | 0.000E+00 | 5.300E+00 | 0.000E+00 | 3.420E-03 |
| RU-106 | 6.570E+01 | 0.000E+00 | 0.000E+00 | 1.270E+02 | 0.000E+00 | 4.250E+03 | 0.000E+00 | 8.320E+00 |
| AG-110M | 8.790E-01 | 8.130E-01 | 0.000E+00 | 1.600E+00 | 0.000E+00 | 3.320E+02 | 0.000E+00 | 4.830E-01 |
| TE-125M | 2.540E+03 | 9.190E+02 | 7.630E+02 | 1.030E+04 | 0.000E+00 | 1.010E+04 | 0.000E+00 | 3.400E+02 |
| TE-127 | 1.790E+01 | 6.440E+00 | 1.330E+01 | 7.300E+01 | 0.000E+00 | 1.410E+03 | 0.000E+00 | 3.880E+00 |
| TE-127M | 6.440E+03 | 2.300E+03 | 1.650E+03 | 2.620E+04 | 0.000E+00 | 2.160E+04 | 0.000E+00 | 7.850E+02 |
| TE-129 | 1.630E-05 | 6.120E-06 | 1.250E-05 | 6.850E-05 | 0.000E+00 | 1.230E-05 | 0.000E+00 | 3.970E-06 |
| TE-129M | 1.080E+04 | 4.020E+03 | 3.710E+03 | 4.500E+04 | 0.000E+00 | 5.430E+04 | 0.000E+00 | 1.710E+03 |
| TE-131 | 8.710E-17 | 3.640E-17 | 7.160E-17 | 3.820E-16 | 0.000E+00 | 1.230E-17 | 0.000E+00 | 2.750E-17 |
| TE-131M | 9.510E+02 | 4.650E+02 | 7.370E+02 | 4.710E+03 | 0.000E+00 | 4.620E+04 | 0.000E+00 | 3.880E+02 |
| TE-132 | 1.950E+03 | 1.260E+03 | 1.390E+03 | 1.210E+04 | 0.000E+00 | 5.960E+04 | 0.000E+00 | 1.180E+03 |
| I-130 | 7.050E+00 | 2.080E+01 | 1.760E+03 | 3.250E+01 | 0.000E+00 | 1.790E+01 | 0.000E+00 | 8.210E+00 |

# APPENDIX C

## $A_i$ Adult Dose Factors for use in the Liquid Dose Calculations

| Agegroup: | ADULT | Pathway: | Fresh Water Fish - Sport (FFSP) | | | Units: | mrem/hr / µCi/ml | |
|---|---|---|---|---|---|---|---|---|
| **Nuclide** | **Bone** | **Liver** | **Thyroid** | **Kidney** | **Lung** | **Gilli** | **Skin** | **Total Body** |
| I-131 | 1.370E+02 | 1.960E+02 | 6.420E+04 | 3.360E+02 | 0.000E+00 | 5.170E+01 | 0.000E+00 | 1.120E+02 |
| I-132 | 5.270E-03 | 1.410E-02 | 4.940E-01 | 2.250E-02 | 0.000E+00 | 2.650E-03 | 0.000E+00 | 4.940E-03 |
| I-133 | 2.290E+01 | 3.990E+01 | 5.860E+03 | 6.950E+01 | 0.000E+00 | 3.580E+01 | 0.000E+00 | 1.210E+01 |
| I-134 | 2.120E-08 | 5.750E-08 | 9.960E-07 | 9.140E-08 | 0.000E+00 | 5.010E-11 | 0.000E+00 | 2.060E-08 |
| I-135 | 1.290E+00 | 3.370E+00 | 2.220E+02 | 5.410E+00 | 0.000E+00 | 3.810E+00 | 0.000E+00 | 1.240E+00 |
| CS-134 | 2.980E+05 | 7.080E+05 | 0.000E+00 | 2.290E+05 | 7.610E+04 | 1.240E+04 | 0.000E+00 | 5.790E+05 |
| CS-136 | 2.960E+04 | 1.170E+05 | 0.000E+00 | 6.500E+04 | 8.900E+03 | 1.330E+04 | 0.000E+00 | 8.400E+04 |
| CS-137 | 3.820E+05 | 5.220E+05 | 0.000E+00 | 1.770E+05 | 5.890E+04 | 1.010E+04 | 0.000E+00 | 3.420E+05 |
| CS-138 | 8.940E-12 | 1.770E-11 | 0.000E+00 | 1.300E-11 | 1.280E-12 | 7.530E-17 | 0.000E+00 | 8.750E-12 |
| BA-139 | 5.650E-06 | 4.030E-09 | 0.000E+00 | 3.760E-09 | 2.280E-09 | 1.000E-05 | 0.000E+00 | 1.660E-07 |
| BA-140 | 1.840E+02 | 2.310E-01 | 0.000E+00 | 7.860E-02 | 1.320E-01 | 3.790E+02 | 0.000E+00 | 1.210E+01 |
| BA-141 | 8.700E-25 | 6.580E-28 | 0.000E+00 | 6.120E-28 | 3.730E-28 | 4.100E-34 | 0.000E+00 | 2.940E-26 |
| BA-142 | 2.570E-42 | 2.640E-45 | 0.000E+00 | 2.230E-45 | 1.490E-45 | 3.620E-60 | 0.000E+00 | 1.610E-43 |
| LA-140 | 9.900E-02 | 4.990E-02 | 0.000E+00 | 0.000E+00 | 0.000E+00 | 3.660E+03 | 0.000E+00 | 1.320E-02 |
| LA-142 | 2.210E-07 | 1.000E-07 | 0.000E+00 | 0.000E+00 | 0.000E+00 | 7.330E-04 | 0.000E+00 | 2.500E-08 |
| CE-141 | 2.190E-02 | 1.480E-02 | 0.000E+00 | 6.890E-03 | 0.000E+00 | 5.670E+01 | 0.000E+00 | 1.680E-03 |
| CE-143 | 2.380E-03 | 1.760E+00 | 0.000E+00 | 7.760E-04 | 0.000E+00 | 6.590E+01 | 0.000E+00 | 1.950E-04 |
| CE-144 | 1.170E+00 | 4.870E-01 | 0.000E+00 | 2.890E-01 | 0.000E+00 | 3.940E+02 | 0.000E+00 | 6.260E-02 |
| PR-143 | 5.230E-01 | 2.100E-01 | 0.000E+00 | 1.210E-01 | 0.000E+00 | 2.290E+03 | 0.000E+00 | 2.590E-02 |
| PR-144 | 1.550E-28 | 6.440E-29 | 0.000E+00 | 3.630E-29 | 0.000E+00 | 2.230E-35 | 0.000E+00 | 7.880E-30 |
| ND-147 | 3.530E-01 | 4.080E-01 | 0.000E+00 | 2.390E-01 | 0.000E+00 | 1.960E+03 | 0.000E+00 | 2.440E-02 |
| W-187 | 1.470E+02 | 1.230E+02 | 0.000E+00 | 0.000E+00 | 0.000E+00 | 4.030E+04 | 0.000E+00 | 4.300E+01 |
| NP-239 | 2.120E-02 | 2.090E-03 | 0.000E+00 | 6.510E-03 | 0.000E+00 | 4.280E+02 | 0.000E+00 | 1.150E-03 |

# APPENDIX C

## $A_i$ Adult Dose Factors for use in the Liquid Dose Calculations

| Agegroup: | ADULT | Pathway: | Shoreline Sediment (SHDp) | | | Units: | mrem/hr / µCi/ml | |
|---|---|---|---|---|---|---|---|---|
| **Nuclide** | **Bone** | **Liver** | **Thyroid** | **Kidney** | **Lung** | **Gilli** | **Skin** | **Total Body** |
| H-3 | 0.000E+00 | 0.000E+00 | 0.000E+00 | 0.000E+00 | 0.000E+00 | 0.000E+00 | 0.000E+00 | 0.000E+00 |
| C-14 | 0.000E+00 | 0.000E+00 | 0.000E+00 | 0.000E+00 | 0.000E+00 | 0.000E+00 | 0.000E+00 | 0.000E+00 |
| NA-24 | 4.270E-01 | 4.270E-01 | 4.270E-01 | 4.270E-01 | 4.270E-01 | 4.270E-01 | 4.960E-01 | 4.270E-01 |
| P-32 | 0.000E+00 | 0.000E+00 | 0.000E+00 | 0.000E+00 | 0.000E+00 | 0.000E+00 | 0.000E+00 | 0.000E+00 |
| CR-51 | 1.670E-01 | 1.670E-01 | 1.670E-01 | 1.670E-01 | 1.670E-01 | 1.670E-01 | 1.970E-01 | 1.670E-01 |
| MN-54 | 4.960E+01 | 4.960E+01 | 4.960E+01 | 4.960E+01 | 4.960E+01 | 4.960E+01 | 5.820E+01 | 4.960E+01 |
| MN-56 | 3.230E-02 | 3.230E-02 | 3.230E-02 | 3.230E-02 | 3.230E-02 | 3.230E-02 | 3.820E-02 | 3.230E-02 |
| FE-55 | 0.000E+00 | 0.000E+00 | 0.000E+00 | 0.000E+00 | 0.000E+00 | 0.000E+00 | 0.000E+00 | 0.000E+00 |
| FE-59 | 9.770E+00 | 9.770E+00 | 9.770E+00 | 9.770E+00 | 9.770E+00 | 9.770E+00 | 1.150E+01 | 9.770E+00 |
| CO-58 | 1.360E+01 | 1.360E+01 | 1.360E+01 | 1.360E+01 | 1.360E+01 | 1.360E+01 | 1.590E+01 | 1.360E+01 |
| CO-60 | 7.690E+02 | 7.690E+02 | 7.690E+02 | 7.690E+02 | 7.690E+02 | 7.690E+02 | 9.050E+02 | 7.690E+02 |
| NI-63 | 0.000E+00 | 0.000E+00 | 0.000E+00 | 0.000E+00 | 0.000E+00 | 0.000E+00 | 0.000E+00 | 0.000E+00 |
| NI-65 | 1.060E-02 | 1.060E-02 | 1.060E-02 | 1.060E-02 | 1.060E-02 | 1.060E-02 | 1.240E-02 | 1.060E-02 |
| CU-64 | 2.170E-02 | 2.170E-02 | 2.170E-02 | 2.170E-02 | 2.170E-02 | 2.170E-02 | 2.460E-02 | 2.170E-02 |
| ZN-65 | 2.670E+01 | 2.670E+01 | 2.670E+01 | 2.670E+01 | 2.670E+01 | 2.670E+01 | 3.080E+01 | 2.670E+01 |
| ZN-69 | 0.000E+00 | 0.000E+00 | 0.000E+00 | 0.000E+00 | 0.000E+00 | 0.000E+00 | 0.000E+00 | 0.000E+00 |
| BR-83 | 1.740E-04 | 1.740E-04 | 1.740E-04 | 1.740E-04 | 1.740E-04 | 1.740E-04 | 2.530E-04 | 1.740E-04 |
| BR-84 | 7.250E-03 | 7.250E-03 | 7.250E-03 | 7.250E-03 | 7.250E-03 | 7.250E-03 | 8.460E-03 | 7.250E-03 |
| BR-85 | 0.000E+00 | 0.000E+00 | 0.000E+00 | 0.000E+00 | 0.000E+00 | 0.000E+00 | 0.000E+00 | 0.000E+00 |
| RB-86 | 3.220E-01 | 3.220E-01 | 3.220E-01 | 3.220E-01 | 3.220E-01 | 3.220E-01 | 3.680E-01 | 3.220E-01 |
| RB-88 | 1.180E-03 | 1.180E-03 | 1.180E-03 | 1.180E-03 | 1.180E-03 | 1.180E-03 | 1.350E-03 | 1.180E-03 |
| RB-89 | 4.400E-03 | 4.400E-03 | 4.400E-03 | 4.400E-03 | 4.400E-03 | 4.400E-03 | 5.280E-03 | 4.400E-03 |
| SR-89 | 7.740E-04 | 7.740E-04 | 7.740E-04 | 7.740E-04 | 7.740E-04 | 7.740E-04 | 8.990E-04 | 7.740E-04 |
| SR-90 | 0.000E+00 | 0.000E+00 | 0.000E+00 | 0.000E+00 | 0.000E+00 | 0.000E+00 | 0.000E+00 | 0.000E+00 |
| SR-91 | 7.690E-02 | 7.690E-02 | 7.690E-02 | 7.690E-02 | 7.690E-02 | 7.690E-02 | 8.990E-02 | 7.690E-02 |

# APPENDIX C

## $A_i$ Adult Dose Factors for use in the Liquid Dose Calculations

| Agegroup: | ADULT | Pathway: | Shoreline Sediment (SHDp) | | | Units: | mrem/hr / µCi/ml | |
|---|---|---|---|---|---|---|---|---|
| **Nuclide** | **Bone** | **Liver** | **Thyroid** | **Kidney** | **Lung** | **Gilli** | **Skin** | **Total Body** |
| SR-92 | 2.780E-02 | 2.780E-02 | 2.780E-02 | 2.780E-02 | 2.780E-02 | 2.780E-02 | 3.090E-02 | 2.780E-02 |
| Y-90 | 1.610E-04 | 1.610E-04 | 1.610E-04 | 1.610E-04 | 1.610E-04 | 1.610E-04 | 1.900E-04 | 1.610E-04 |
| Y-91 | 3.840E-02 | 3.840E-02 | 3.840E-02 | 3.840E-02 | 3.840E-02 | 3.840E-02 | 4.320E-02 | 3.840E-02 |
| Y-91M | 3.590E-03 | 3.590E-03 | 3.590E-03 | 3.590E-03 | 3.590E-03 | 3.590E-03 | 4.150E-03 | 3.590E-03 |
| Y-92 | 6.460E-03 | 6.460E-03 | 6.460E-03 | 6.460E-03 | 6.460E-03 | 6.460E-03 | 7.670E-03 | 6.460E-03 |
| Y-93 | 6.560E-03 | 6.560E-03 | 6.560E-03 | 6.560E-03 | 6.560E-03 | 6.560E-03 | 8.980E-03 | 6.560E-03 |
| ZR-95 | 8.760E+00 | 8.760E+00 | 8.760E+00 | 8.760E+00 | 8.760E+00 | 8.760E+00 | 1.020E+01 | 8.760E+00 |
| ZR-97 | 1.060E-01 | 1.060E-01 | 1.060E-01 | 1.060E-01 | 1.060E-01 | 1.060E-01 | 1.230E-01 | 1.060E-01 |
| NB-95 | 4.890E+00 | 4.890E+00 | 4.890E+00 | 4.890E+00 | 4.890E+00 | 4.890E+00 | 5.750E+00 | 4.890E+00 |
| MO-99 | 1.430E-01 | 1.430E-01 | 1.430E-01 | 1.430E-01 | 1.430E-01 | 1.430E-01 | 1.660E-01 | 1.430E-01 |
| TC-99M | 6.590E-03 | 6.590E-03 | 6.590E-03 | 6.590E-03 | 6.590E-03 | 6.590E-03 | 7.550E-03 | 6.590E-03 |
| TC-101 | 7.280E-04 | 7.280E-04 | 7.280E-04 | 7.280E-04 | 7.280E-04 | 7.280E-04 | 8.090E-04 | 7.280E-04 |
| RU-103 | 3.870E+00 | 3.870E+00 | 3.870E+00 | 3.870E+00 | 3.870E+00 | 3.870E+00 | 4.520E+00 | 3.870E+00 |
| RU-105 | 2.280E-02 | 2.280E-02 | 2.280E-02 | 2.280E-02 | 2.280E-02 | 2.280E-02 | 2.580E-02 | 2.280E-02 |
| RU-106 | 1.510E+01 | 1.510E+01 | 1.510E+01 | 1.510E+01 | 1.510E+01 | 1.510E+01 | 1.810E+01 | 1.510E+01 |
| AG-110M | 1.230E+02 | 1.230E+02 | 1.230E+02 | 1.230E+02 | 1.230E+02 | 1.230E+02 | 1.440E+02 | 1.230E+02 |
| TE-125M | 5.550E-02 | 5.550E-02 | 5.550E-02 | 5.550E-02 | 5.550E-02 | 5.550E-02 | 7.620E-02 | 5.550E-02 |
| TE-127 | 1.070E-04 | 1.070E-04 | 1.070E-04 | 1.070E-04 | 1.070E-04 | 1.070E-04 | 1.170E-04 | 1.070E-04 |
| TE-127M | 3.280E-03 | 3.280E-03 | 3.280E-03 | 3.280E-03 | 3.280E-03 | 3.280E-03 | 3.880E-03 | 3.280E-03 |
| TE-129 | 9.390E-04 | 9.390E-04 | 9.390E-04 | 9.390E-04 | 9.390E-04 | 9.390E-04 | 1.110E-03 | 9.390E-04 |
| TE-129M | 7.080E-01 | 7.080E-01 | 7.080E-01 | 7.080E-01 | 7.080E-01 | 7.080E-01 | 8.270E-01 | 7.080E-01 |
| TE-131 | 1.040E-03 | 1.040E-03 | 1.040E-03 | 1.040E-03 | 1.040E-03 | 1.040E-03 | 1.230E+00 | 1.040E-03 |
| TE-131M | 2.870E-01 | 2.870E-01 | 2.870E-01 | 2.870E-01 | 2.870E-01 | 2.870E-01 | 3.390E-01 | 2.870E-01 |
| TE-132 | 1.520E-01 | 1.520E-01 | 1.520E-01 | 1.520E-01 | 1.520E-01 | 1.520E-01 | 1.780E-01 | 1.520E-01 |
| I-130 | 1.970E-01 | 1.970E-01 | 1.970E-01 | 1.970E-01 | 1.970E-01 | 1.970E-01 | 2.390E-01 | 1.970E-01 |

# APPENDIX C

## $A_i$ Adult Dose Factors for use in the Liquid Dose Calculations

| Agegroup: | ADULT | Pathway: | Shoreline Sediment (SHDp) | | | Units: | mrem/hr / µCi/ml | |
|---|---|---|---|---|---|---|---|---|
| **Nuclide** | **Bone** | **Liver** | **Thyroid** | **Kidney** | **Lung** | **Gilli** | **Skin** | **Total Body** |
| I-131 | 6.160E-01 | 6.160E-01 | 6.160E-01 | 6.160E-01 | 6.160E-01 | 6.160E-01 | 7.480E-01 | 6.160E-01 |
| I-132 | 4.460E-02 | 4.460E-02 | 4.460E-02 | 4.460E-02 | 4.460E-02 | 4.460E-02 | 5.240E-02 | 4.460E-02 |
| I-133 | 8.770E-02 | 8.770E-02 | 8.770E-02 | 8.770E-02 | 8.770E-02 | 8.770E-02 | 1.070E-01 | 8.770E-02 |
| I-134 | 1.600E-02 | 1.600E-02 | 1.600E-02 | 1.600E-02 | 1.600E-02 | 1.600E-02 | 1.900E-02 | 1.600E-02 |
| I-135 | 9.040E-02 | 9.040E-02 | 9.040E-02 | 9.040E-02 | 9.040E-02 | 9.040E-02 | 1.050E-01 | 9.040E-02 |
| CS-134 | 2.450E+02 | 2.450E+02 | 2.450E+02 | 2.450E+02 | 2.450E+02 | 2.450E+02 | 2.860E+02 | 2.450E+02 |
| CS-136 | 5.400E+00 | 5.400E+00 | 5.400E+00 | 5.400E+00 | 5.400E+00 | 5.400E+00 | 6.120E+00 | 5.400E+00 |
| CS-137 | 3.680E+02 | 3.680E+02 | 3.680E+02 | 3.680E+02 | 3.680E+02 | 3.680E+02 | 4.290E+02 | 3.680E+02 |
| CS-138 | 1.280E-02 | 1.280E-02 | 1.280E-02 | 1.280E-02 | 1.280E-02 | 1.280E-02 | 1.470E-02 | 1.280E-02 |
| BA-139 | 3.790E-03 | 3.790E-03 | 3.790E-03 | 3.790E-03 | 3.790E-03 | 3.790E-03 | 4.260E-03 | 3.790E-03 |
| BA-140 | 7.350E-01 | 7.350E-01 | 7.350E-01 | 7.350E-01 | 7.350E-01 | 7.350E-01 | 8.400E-01 | 7.350E-01 |
| BA-141 | 1.490E-03 | 1.490E-03 | 1.490E-03 | 1.490E-03 | 1.490E-03 | 1.490E-03 | 1.700E-03 | 1.490E-03 |
| BA-142 | 1.610E-03 | 1.610E-03 | 1.610E-03 | 1.610E-03 | 1.610E-03 | 1.610E-03 | 1.830E-03 | 1.610E-03 |
| LA-140 | 6.880E-01 | 6.880E-01 | 6.880E-01 | 6.880E-01 | 6.880E-01 | 6.880E-01 | 7.790E-01 | 6.880E-01 |
| LA-142 | 2.720E-02 | 2.720E-02 | 2.720E-02 | 2.720E-02 | 2.720E-02 | 2.720E-02 | 3.260E-02 | 2.720E-02 |
| CE-141 | 4.890E-01 | 4.890E-01 | 4.890E-01 | 4.890E-01 | 4.890E-01 | 4.890E-01 | 5.510E-01 | 4.890E-01 |
| CE-143 | 8.270E-02 | 8.270E-02 | 8.270E-02 | 8.270E-02 | 8.270E-02 | 8.270E-02 | 9.400E-02 | 8.270E-02 |
| CE-144 | 2.490E+00 | 2.490E+00 | 2.490E+00 | 2.490E+00 | 2.490E+00 | 2.490E+00 | 2.880E+00 | 2.490E+00 |
| PR-143 | 0.000E+00 | 0.000E+00 | 0.000E+00 | 0.000E+00 | 0.000E+00 | 0.000E+00 | 0.000E+00 | 0.000E+00 |
| PR-144 | 6.570E-05 | 6.570E-05 | 6.570E-05 | 6.570E-05 | 6.570E-05 | 6.570E-05 | 7.550E-05 | 6.570E-05 |
| ND-147 | 3.000E-01 | 3.000E-01 | 3.000E-01 | 3.000E-01 | 3.000E-01 | 3.000E-01 | 3.600E-01 | 3.000E-01 |
| W-187 | 8.420E-02 | 8.420E-02 | 8.420E-02 | 8.420E-02 | 8.420E-02 | 8.420E-02 | 9.780E-02 | 8.420E-02 |
| NP-239 | 6.120E-02 | 6.120E-02 | 6.120E-02 | 6.120E-02 | 6.120E-02 | 6.120E-02 | 7.090E-02 | 6.120E-02 |

# APPENDIX D

## $A_i$ Teen Factors for use in the Liquid Dose Calculations

| Agegroup: | TEEN | Pathway: | Potable Water (PWtr) | | | Units: | mrem/hr / µCi/ml | |
|---|---|---|---|---|---|---|---|---|
| **Nuclide** | **Bone** | **Liver** | **Thyroid** | **Kidney** | **Lung** | **Gilli** | **Skin** | **Total Body** |
| H-3 | 0.000E+00 | 6.160E+00 | 6.160E+00 | 6.160E+00 | 6.160E+00 | 6.160E+00 | 0.000E+00 | 6.160E+00 |
| C-14 | 2.360E+02 | 4.720E+01 | 4.720E+01 | 4.720E+01 | 4.720E+01 | 4.720E+01 | 0.000E+00 | 4.720E+01 |
| NA-24 | 7.690E+01 | 7.690E+01 | 7.690E+01 | 7.690E+01 | 7.690E+01 | 7.690E+01 | 0.000E+00 | 7.690E+01 |
| P-32 | 1.570E+04 | 9.700E+02 | 0.000E+00 | 0.000E+00 | 0.000E+00 | 1.320E+03 | 0.000E+00 | 6.070E+02 |
| CR-51 | 0.000E+00 | 0.000E+00 | 1.150E-01 | 4.530E-02 | 2.950E-01 | 3.470E+01 | 0.000E+00 | 2.070E-01 |
| MN-54 | 0.000E+00 | 3.430E+02 | 0.000E+00 | 1.020E+02 | 0.000E+00 | 7.030E+02 | 0.000E+00 | 6.790E+01 |
| MN-56 | 0.000E+00 | 3.640E-01 | 0.000E+00 | 4.610E-01 | 0.000E+00 | 2.400E+01 | 0.000E+00 | 6.480E-02 |
| FE-55 | 2.200E+02 | 1.560E+02 | 0.000E+00 | 0.000E+00 | 9.880E+01 | 6.740E+01 | 0.000E+00 | 3.630E+01 |
| FE-59 | 3.390E+02 | 7.900E+02 | 0.000E+00 | 0.000E+00 | 2.490E+02 | 1.870E+03 | 0.000E+00 | 3.050E+02 |
| CO-58 | 0.000E+00 | 5.620E+01 | 0.000E+00 | 0.000E+00 | 0.000E+00 | 7.750E+02 | 0.000E+00 | 1.300E+02 |
| CO-60 | 0.000E+00 | 1.630E+02 | 0.000E+00 | 0.000E+00 | 0.000E+00 | 2.130E+03 | 0.000E+00 | 3.680E+02 |
| NI-63 | 1.030E+04 | 7.270E+02 | 0.000E+00 | 0.000E+00 | 0.000E+00 | 1.160E+02 | 0.000E+00 | 3.490E+02 |
| NI-65 | 1.610E+00 | 2.050E-01 | 0.000E+00 | 0.000E+00 | 0.000E+00 | 1.110E+01 | 0.000E+00 | 9.350E-02 |
| CU-64 | 0.000E+00 | 3.470E+00 | 0.000E+00 | 8.770E+00 | 0.000E+00 | 2.690E+02 | 0.000E+00 | 1.630E+00 |
| ZN-65 | 3.340E+02 | 1.160E+03 | 0.000E+00 | 7.430E+02 | 0.000E+00 | 4.920E+02 | 0.000E+00 | 5.420E+02 |
| ZN-69 | 1.070E-04 | 2.040E-04 | 0.000E+00 | 1.330E-04 | 0.000E+00 | 3.760E-04 | 0.000E+00 | 1.430E-05 |
| BR-83 | 0.000E+00 | 0.000E+00 | 0.000E+00 | 0.000E+00 | 0.000E+00 | 0.000E+00 | 0.000E+00 | 1.030E-01 |
| BR-84 | 0.000E+00 | 0.000E+00 | 0.000E+00 | 0.000E+00 | 0.000E+00 | 0.000E+00 | 0.000E+00 | 6.500E-07 |
| BR-85 | 0.000E+00 | 0.000E+00 | 0.000E+00 | 0.000E+00 | 0.000E+00 | 0.000E+00 | 0.000E+00 | 4.360E-77 |
| RB-86 | 0.000E+00 | 1.700E+03 | 0.000E+00 | 0.000E+00 | 0.000E+00 | 2.520E+02 | 0.000E+00 | 7.990E+02 |
| RB-88 | 0.000E+00 | 3.300E-12 | 0.000E+00 | 0.000E+00 | 0.000E+00 | 2.830E-19 | 0.000E+00 | 1.760E-12 |
| RB-89 | 0.000E+00 | 2.960E-14 | 0.000E+00 | 0.000E+00 | 0.000E+00 | 4.540E-23 | 0.000E+00 | 2.090E-14 |
| SR-89 | 2.540E+04 | 0.000E+00 | 0.000E+00 | 0.000E+00 | 0.000E+00 | 3.030E+03 | 0.000E+00 | 7.280E+02 |
| SR-90 | 4.830E+05 | 0.000E+00 | 0.000E+00 | 0.000E+00 | 0.000E+00 | 1.350E+04 | 0.000E+00 | 1.190E+05 |
| SR-91 | 1.950E+02 | 0.000E+00 | 0.000E+00 | 0.000E+00 | 0.000E+00 | 8.850E+02 | 0.000E+00 | 7.760E+00 |

# APPENDIX D

## $A_i$ Teen Factors for use in the Liquid Dose Calculations

| Agegroup: | TEEN | Pathway: | Potable Water (PWtr) | | | Units: | mrem/hr / µCi/ml | |
|---|---|---|---|---|---|---|---|---|
| **Nuclide** | **Bone** | **Liver** | **Thyroid** | **Kidney** | **Lung** | **Gilli** | **Skin** | **Total Body** |
| SR-92 | 8.220E+00 | 0.000E+00 | 0.000E+00 | 0.000E+00 | 0.000E+00 | 2.090E+02 | 0.000E+00 | 3.500E-01 |
| Y-90 | 7.000E-01 | 0.000E+00 | 0.000E+00 | 0.000E+00 | 0.000E+00 | 5.770E+03 | 0.000E+00 | 1.880E-02 |
| Y-91 | 1.160E+01 | 0.000E+00 | 0.000E+00 | 0.000E+00 | 0.000E+00 | 4.760E+03 | 0.000E+00 | 3.120E-01 |
| Y-91M | 3.330E-07 | 0.000E+00 | 0.000E+00 | 0.000E+00 | 0.000E+00 | 1.570E-05 | 0.000E+00 | 1.270E-08 |
| Y-92 | 6.710E-03 | 0.000E+00 | 0.000E+00 | 0.000E+00 | 0.000E+00 | 1.840E+02 | 0.000E+00 | 1.940E-04 |
| Y-93 | 9.760E-02 | 0.000E+00 | 0.000E+00 | 0.000E+00 | 0.000E+00 | 2.980E+03 | 0.000E+00 | 2.670E-03 |
| ZR-95 | 2.380E+00 | 7.520E-01 | 0.000E+00 | 1.100E+00 | 0.000E+00 | 1.730E+03 | 0.000E+00 | 5.170E-01 |
| ZR-97 | 8.420E-02 | 1.670E-02 | 0.000E+00 | 2.530E-02 | 0.000E+00 | 4.510E+03 | 0.000E+00 | 7.670E-03 |
| NB-95 | 4.730E-01 | 2.630E-01 | 0.000E+00 | 2.540E-01 | 0.000E+00 | 1.120E+03 | 0.000E+00 | 1.440E-01 |
| MO-99 | 0.000E+00 | 3.090E+02 | 0.000E+00 | 7.070E+02 | 0.000E+00 | 5.530E+02 | 0.000E+00 | 5.890E+01 |
| TC-99M | 4.840E-03 | 1.350E-02 | 0.000E+00 | 2.010E-01 | 7.500E-03 | 8.870E+00 | 0.000E+00 | 1.750E-01 |
| TC-101 | 1.120E-17 | 1.590E-17 | 0.000E+00 | 2.880E-16 | 9.700E-18 | 2.720E-24 | 0.000E+00 | 1.560E-16 |
| RU-103 | 1.470E+01 | 0.000E+00 | 0.000E+00 | 5.180E+01 | 0.000E+00 | 1.230E+03 | 0.000E+00 | 6.280E+00 |
| RU-105 | 1.940E-01 | 0.000E+00 | 0.000E+00 | 2.450E+00 | 0.000E+00 | 1.570E+02 | 0.000E+00 | 7.540E-02 |
| RU-106 | 2.280E+02 | 0.000E+00 | 0.000E+00 | 4.390E+02 | 0.000E+00 | 1.090E+04 | 0.000E+00 | 2.870E+01 |
| AG-110M | 1.190E+01 | 1.130E+01 | 0.000E+00 | 2.150E+01 | 0.000E+00 | 3.160E+03 | 0.000E+00 | 6.850E+00 |
| TE-125M | 2.210E+02 | 7.980E+01 | 6.180E+01 | 0.000E+00 | 0.000E+00 | 6.530E+02 | 0.000E+00 | 2.960E+01 |
| TE-127 | 3.790E+00 | 1.340E+00 | 2.610E+00 | 1.530E+01 | 0.000E+00 | 2.930E+02 | 0.000E+00 | 8.150E-01 |
| TE-127M | 5.600E+02 | 1.990E+02 | 1.330E+02 | 2.270E+03 | 0.000E+00 | 1.400E+03 | 0.000E+00 | 6.660E+01 |
| TE-129 | 1.920E-03 | 7.150E-04 | 1.370E-03 | 8.040E-03 | 0.000E+00 | 1.050E-02 | 0.000E+00 | 4.660E-04 |
| TE-129M | 9.380E+02 | 3.480E+02 | 3.030E+02 | 3.920E+03 | 0.000E+00 | 3.520E+03 | 0.000E+00 | 1.480E+02 |
| TE-131 | 3.490E-09 | 1.440E-09 | 2.690E-09 | 1.520E-08 | 0.000E+00 | 2.860E-10 | 0.000E+00 | 1.090E-09 |
| TE-131M | 1.080E+02 | 5.150E+01 | 7.750E+01 | 5.380E+02 | 0.000E+00 | 4.140E+03 | 0.000E+00 | 4.300E+01 |
| TE-132 | 1.820E+02 | 1.150E+02 | 1.220E+02 | 1.110E+03 | 0.000E+00 | 3.660E+03 | 0.000E+00 | 1.090E+02 |
| I-130 | 3.050E+01 | 8.830E+01 | 7.200E+03 | 1.360E+02 | 0.000E+00 | 6.790E+01 | 0.000E+00 | 3.530E+01 |

# APPENDIX D

## $A_i$ Teen Factors for use in the Liquid Dose Calculations

| Agegroup: | TEEN | Pathway: | Potable Water (PWtr) | | | Units: | mrem/hr / µCi/ml | |
|---|---|---|---|---|---|---|---|---|
| **Nuclide** | **Bone** | **Liver** | **Thyroid** | **Kidney** | **Lung** | **Gilli** | **Skin** | **Total Body** |
| I-131 | 3.260E+02 | 4.560E+02 | 1.330E+05 | 7.850E+02 | 0.000E+00 | 9.020E+01 | 0.000E+00 | 2.450E+02 |
| I-132 | 4.360E-01 | 1.140E+00 | 3.850E+01 | 1.800E+00 | 0.000E+00 | 4.970E-01 | 0.000E+00 | 4.100E-01 |
| I-133 | 7.830E+01 | 1.330E+02 | 1.860E+04 | 2.330E+02 | 0.000E+00 | 1.010E+02 | 0.000E+00 | 4.050E+01 |
| I-134 | 6.330E-04 | 1.680E-03 | 2.800E-02 | 2.640E-03 | 0.000E+00 | 2.210E-05 | 0.000E+00 | 6.020E-04 |
| I-135 | 1.010E+01 | 2.600E+01 | 1.670E+03 | 4.100E+01 | 0.000E+00 | 2.880E+01 | 0.000E+00 | 9.630E+00 |
| CS-134 | 4.860E+03 | 1.140E+04 | 0.000E+00 | 3.640E+03 | 1.390E+03 | 1.420E+02 | 0.000E+00 | 5.310E+03 |
| CS-136 | 4.860E+02 | 1.910E+03 | 0.000E+00 | 1.040E+03 | 1.640E+02 | 1.540E+02 | 0.000E+00 | 1.290E+03 |
| CS-137 | 6.510E+03 | 8.660E+03 | 0.000E+00 | 2.950E+03 | 1.150E+03 | 1.230E+02 | 0.000E+00 | 3.020E+03 |
| CS-138 | 8.300E-07 | 1.590E-06 | 0.000E+00 | 1.180E-06 | 1.370E-07 | 7.230E-10 | 0.000E+00 | 7.970E-07 |
| BA-139 | 1.990E-02 | 1.400E-05 | 0.000E+00 | 1.320E-05 | 9.670E-06 | 1.780E-01 | 0.000E+00 | 5.810E-04 |
| BA-140 | 1.610E+03 | 1.970E+00 | 0.000E+00 | 6.680E-01 | 1.320E+00 | 2.480E+03 | 0.000E+00 | 1.040E+02 |
| BA-141 | 5.420E-12 | 4.050E-15 | 0.000E+00 | 3.760E-15 | 2.770E-15 | 1.150E-17 | 0.000E+00 | 1.810E-13 |
| BA-142 | 6.170E-21 | 6.170E-24 | 0.000E+00 | 5.220E-24 | 4.100E-24 | 1.890E-32 | 0.000E+00 | 3.800E-22 |
| LA-140 | 1.650E-01 | 8.090E-02 | 0.000E+00 | 0.000E+00 | 0.000E+00 | 4.640E+03 | 0.000E+00 | 2.150E-02 |
| LA-142 | 5.590E-05 | 2.480E-05 | 0.000E+00 | 0.000E+00 | 0.000E+00 | 7.550E-01 | 0.000E+00 | 6.180E-06 |
| CE-141 | 7.650E-01 | 5.110E-01 | 0.000E+00 | 2.400E-01 | 0.000E+00 | 1.460E+03 | 0.000E+00 | 5.870E-02 |
| CE-143 | 1.060E-01 | 7.730E+01 | 0.000E+00 | 3.460E-02 | 0.000E+00 | 2.320E+03 | 0.000E+00 | 8.630E-03 |
| CE-144 | 4.040E+01 | 1.670E+01 | 0.000E+00 | 9.990E+00 | 0.000E+00 | 1.020E+04 | 0.000E+00 | 2.170E+00 |
| PR-143 | 7.420E-01 | 2.960E-01 | 0.000E+00 | 1.720E-01 | 0.000E+00 | 2.440E+03 | 0.000E+00 | 3.700E-02 |
| PR-144 | 7.330E-16 | 3.000E-16 | 0.000E+00 | 1.720E-16 | 0.000E+00 | 8.080E-19 | 0.000E+00 | 3.720E-17 |
| ND-147 | 5.280E-01 | 5.750E-01 | 0.000E+00 | 3.370E-01 | 0.000E+00 | 2.070E+03 | 0.000E+00 | 3.440E-02 |
| W-187 | 5.990E+00 | 4.880E+00 | 0.000E+00 | 0.000E+00 | 0.000E+00 | 1.320E+03 | 0.000E+00 | 1.710E+00 |
| NP-239 | 8.830E-02 | 8.330E-03 | 0.000E+00 | 2.610E-02 | 0.000E+00 | 1.340E+03 | 0.000E+00 | 4.630E-03 |

# APPENDIX D

## $A_i$ Teen Dose Factors for use in the Liquid Dose Calculations

| Agegroup: | TEEN | Pathway: | Fresh Water Fish - Sport (FFSP) | | | Units: | mrem/hr / µCi/ml | |
|---|---|---|---|---|---|---|---|---|
| **Nuclide** | **Bone** | **Liver** | **Thyroid** | **Kidney** | **Lung** | **Gilli** | **Skin** | **Total Body** |
| H-3 | 0.000E+00 | 1.740E-01 | 1.740E-01 | 1.740E-01 | 1.740E-01 | 1.740E-01 | 0.000E+00 | 1.740E-01 |
| C-14 | 3.410E+04 | 6.810E+03 | 6.810E+03 | 6.810E+03 | 6.810E+03 | 6.810E+03 | 0.000E+00 | 6.810E+03 |
| NA-24 | 1.390E+02 | 1.390E+02 | 1.390E+02 | 1.390E+02 | 1.390E+02 | 1.390E+02 | 0.000E+00 | 1.390E+02 |
| P-32 | 1.440E+06 | 8.910E+04 | 0.000E+00 | 0.000E+00 | 0.000E+00 | 1.210E+05 | 0.000E+00 | 5.580E+04 |
| CR-51 | 0.000E+00 | 0.000E+00 | 7.120E-01 | 2.810E-01 | 1.830E+00 | 2.150E+02 | 0.000E+00 | 1.280E+00 |
| MN-54 | 0.000E+00 | 4.300E+03 | 0.000E+00 | 1.280E+03 | 0.000E+00 | 8.810E+03 | 0.000E+00 | 8.520E+02 |
| MN-56 | 0.000E+00 | 1.810E-01 | 0.000E+00 | 2.300E-01 | 0.000E+00 | 1.190E+01 | 0.000E+00 | 3.230E-02 |
| FE-55 | 6.890E+02 | 4.880E+02 | 0.000E+00 | 0.000E+00 | 3.100E+02 | 2.110E+02 | 0.000E+00 | 1.140E+02 |
| FE-59 | 1.050E+03 | 2.460E+03 | 0.000E+00 | 0.000E+00 | 7.760E+02 | 5.820E+03 | 0.000E+00 | 9.500E+02 |
| CO-58 | 0.000E+00 | 8.780E+01 | 0.000E+00 | 0.000E+00 | 0.000E+00 | 1.210E+03 | 0.000E+00 | 2.020E+02 |
| CO-60 | 0.000E+00 | 2.560E+02 | 0.000E+00 | 0.000E+00 | 0.000E+00 | 3.340E+03 | 0.000E+00 | 5.770E+02 |
| NI-63 | 3.230E+04 | 2.280E+03 | 0.000E+00 | 0.000E+00 | 0.000E+00 | 3.630E+02 | 0.000E+00 | 1.090E+03 |
| NI-65 | 1.860E-01 | 2.370E-02 | 0.000E+00 | 0.000E+00 | 0.000E+00 | 1.290E+00 | 0.000E+00 | 1.080E-02 |
| CU-64 | 0.000E+00 | 2.820E+00 | 0.000E+00 | 7.140E+00 | 0.000E+00 | 2.190E+02 | 0.000E+00 | 1.330E+00 |
| ZN-65 | 2.100E+04 | 7.280E+04 | 0.000E+00 | 4.660E+04 | 0.000E+00 | 3.080E+04 | 0.000E+00 | 3.390E+04 |
| ZN-69 | 8.410E-07 | 1.600E-06 | 0.000E+00 | 1.050E-06 | 0.000E+00 | 2.950E-06 | 0.000E+00 | 1.120E-07 |
| BR-83 | 0.000E+00 | 0.000E+00 | 0.000E+00 | 0.000E+00 | 0.000E+00 | 0.000E+00 | 0.000E+00 | 4.160E-02 |
| BR-84 | 0.000E+00 | 0.000E+00 | 0.000E+00 | 0.000E+00 | 0.000E+00 | 0.000E+00 | 0.000E+00 | 1.320E-12 |
| BR-85 | 0.000E+00 | 0.000E+00 | 0.000E+00 | 0.000E+00 | 0.000E+00 | 0.000E+00 | 0.000E+00 | 0.000E+00 |
| RB-86 | 0.000E+00 | 1.050E+05 | 0.000E+00 | 0.000E+00 | 0.000E+00 | 1.550E+04 | 0.000E+00 | 4.920E+04 |
| RB-88 | 0.000E+00 | 1.380E-22 | 0.000E+00 | 0.000E+00 | 0.000E+00 | 1.180E-29 | 0.000E+00 | 7.360E-23 |
| RB-89 | 0.000E+00 | 1.720E-26 | 0.000E+00 | 0.000E+00 | 0.000E+00 | 2.630E-35 | 0.000E+00 | 1.220E-26 |
| SR-89 | 2.370E+04 | 0.000E+00 | 0.000E+00 | 0.000E+00 | 0.000E+00 | 2.830E+03 | 0.000E+00 | 6.800E+02 |
| SR-90 | 4.540E+05 | 0.000E+00 | 0.000E+00 | 0.000E+00 | 0.000E+00 | 1.270E+04 | 0.000E+00 | 1.120E+05 |
| SR-91 | 7.640E+01 | 0.000E+00 | 0.000E+00 | 0.000E+00 | 0.000E+00 | 3.470E+02 | 0.000E+00 | 3.040E+00 |

# APPENDIX D

## $A_i$ Teen Dose Factors for use in the Liquid Dose Calculations

| Agegroup: | TEEN | Pathway: | Fresh Water Fish - Sport (FFSP) | | | Units: | mrem/hr / µCi/ml | |
|---|---|---|---|---|---|---|---|---|
| **Nuclide** | **Bone** | **Liver** | **Thyroid** | **Kidney** | **Lung** | **Gilli** | **Skin** | **Total Body** |
| SR-92 | 3.590E-01 | 0.000E+00 | 0.000E+00 | 0.000E+00 | 0.000E+00 | 9.130E+00 | 0.000E+00 | 1.530E-02 |
| Y-90 | 4.820E-01 | 0.000E+00 | 0.000E+00 | 0.000E+00 | 0.000E+00 | 3.980E+03 | 0.000E+00 | 1.300E-02 |
| Y-91 | 9.060E+00 | 0.000E+00 | 0.000E+00 | 0.000E+00 | 0.000E+00 | 3.710E+03 | 0.000E+00 | 2.430E-01 |
| Y-91M | 1.160E-11 | 0.000E+00 | 0.000E+00 | 0.000E+00 | 0.000E+00 | 5.470E-10 | 0.000E+00 | 4.430E-13 |
| Y-92 | 5.020E-04 | 0.000E+00 | 0.000E+00 | 0.000E+00 | 0.000E+00 | 1.380E+01 | 0.000E+00 | 1.450E-05 |
| Y-93 | 3.350E-02 | 0.000E+00 | 0.000E+00 | 0.000E+00 | 0.000E+00 | 1.020E+03 | 0.000E+00 | 9.190E-04 |
| ZR-95 | 2.450E-01 | 7.740E-02 | 0.000E+00 | 1.140E-01 | 0.000E+00 | 1.790E+02 | 0.000E+00 | 5.320E-02 |
| ZR-97 | 5.330E-03 | 1.050E-03 | 0.000E+00 | 1.600E-03 | 0.000E+00 | 2.850E+02 | 0.000E+00 | 4.860E-04 |
| NB-95 | 4.410E+02 | 2.450E+02 | 0.000E+00 | 2.370E+02 | 0.000E+00 | 1.050E+06 | 0.000E+00 | 1.350E+02 |
| MO-99 | 0.000E+00 | 8.550E+01 | 0.000E+00 | 1.960E+02 | 0.000E+00 | 1.530E+02 | 0.000E+00 | 1.630E+01 |
| TC-99M | 5.720E-04 | 1.600E-03 | 0.000E+00 | 2.380E-02 | 8.860E-04 | 1.050E+00 | 0.000E+00 | 2.070E-02 |
| TC-101 | 2.820E-33 | 4.010E-33 | 0.000E+00 | 7.240E-32 | 2.440E-33 | 6.840E-40 | 0.000E+00 | 3.930E-32 |
| RU-103 | 4.570E+00 | 0.000E+00 | 0.000E+00 | 1.610E+01 | 0.000E+00 | 3.820E+02 | 0.000E+00 | 1.950E+00 |
| RU-105 | 9.350E-03 | 0.000E+00 | 0.000E+00 | 1.180E-01 | 0.000E+00 | 7.550E+00 | 0.000E+00 | 3.630E-03 |
| RU-106 | 7.140E+01 | 0.000E+00 | 0.000E+00 | 1.380E+02 | 0.000E+00 | 3.420E+03 | 0.000E+00 | 8.990E+00 |
| AG-110M | 8.580E-01 | 8.120E-01 | 0.000E+00 | 1.550E+00 | 0.000E+00 | 2.280E+02 | 0.000E+00 | 4.940E-01 |
| TE-125M | 2.760E+03 | 9.950E+02 | 7.710E+02 | 0.000E+00 | 0.000E+00 | 8.150E+03 | 0.000E+00 | 3.690E+02 |
| TE-127 | 1.960E+01 | 6.950E+00 | 1.350E+01 | 7.940E+01 | 0.000E+00 | 1.510E+03 | 0.000E+00 | 4.220E+00 |
| TE-127M | 7.010E+03 | 2.490E+03 | 1.670E+03 | 2.840E+04 | 0.000E+00 | 1.750E+04 | 0.000E+00 | 8.340E+02 |
| TE-129 | 1.770E-05 | 6.600E-06 | 1.260E-05 | 7.430E-05 | 0.000E+00 | 9.680E-05 | 0.000E+00 | 4.310E-06 |
| TE-129M | 1.160E+04 | 4.320E+03 | 3.760E+03 | 4.870E+04 | 0.000E+00 | 4.370E+04 | 0.000E+00 | 1.840E+03 |
| TE-131 | 9.400E-17 | 3.870E-17 | 7.240E-17 | 4.110E-16 | 0.000E+00 | 7.710E-18 | 0.000E+00 | 2.940E-17 |
| TE-131M | 1.020E+03 | 4.900E+02 | 7.370E+02 | 5.110E+03 | 0.000E+00 | 3.930E+04 | 0.000E+00 | 4.090E+02 |
| TE-132 | 2.060E+03 | 1.300E+03 | 1.370E+03 | 1.250E+04 | 0.000E+00 | 4.130E+04 | 0.000E+00 | 1.230E+03 |
| I-130 | 7.320E+00 | 2.120E+01 | 1.730E+03 | 3.260E+01 | 0.000E+00 | 1.630E+01 | 0.000E+00 | 8.460E+00 |

# APPENDIX D

## $A_i$ Teen Dose Factors for use in the Liquid Dose Calculations

| Agegroup: | TEEN | Pathway: | Fresh Water Fish - Sport (FFSP) | | | Units: | mrem/hr / µCi/ml | |
|---|---|---|---|---|---|---|---|---|
| **Nuclide** | **Bone** | **Liver** | **Thyroid** | **Kidney** | **Lung** | **Gilli** | **Skin** | **Total Body** |
| I-131 | 1.470E+02 | 2.060E+02 | 6.000E+04 | 3.540E+02 | 0.000E+00 | 4.070E+01 | 0.000E+00 | 1.100E+02 |
| I-132 | 5.520E-03 | 1.440E-02 | 4.870E-01 | 2.280E-02 | 0.000E+00 | 6.290E-03 | 0.000E+00 | 5.180E-03 |
| I-133 | 2.470E+01 | 4.190E+01 | 5.850E+03 | 7.350E+01 | 0.000E+00 | 3.170E+01 | 0.000E+00 | 1.280E+01 |
| I-134 | 2.220E-08 | 5.890E-08 | 9.810E-07 | 9.280E-08 | 0.000E+00 | 7.760E-10 | 0.000E+00 | 2.110E-08 |
| I-135 | 1.350E+00 | 3.480E+00 | 2.240E+02 | 5.490E+00 | 0.000E+00 | 3.850E+00 | 0.000E+00 | 1.290E+00 |
| CS-134 | 3.050E+05 | 7.180E+05 | 0.000E+00 | 2.280E+05 | 8.710E+04 | 8.930E+03 | 0.000E+00 | 3.330E+05 |
| CS-136 | 2.970E+04 | 1.170E+05 | 0.000E+00 | 6.370E+04 | 1.000E+04 | 9.410E+03 | 0.000E+00 | 7.860E+04 |
| CS-137 | 4.090E+05 | 5.440E+05 | 0.000E+00 | 1.850E+05 | 7.190E+04 | 7.730E+03 | 0.000E+00 | 1.890E+05 |
| CS-138 | 9.580E-12 | 1.840E-11 | 0.000E+00 | 1.360E-11 | 1.580E-12 | 8.340E-15 | 0.000E+00 | 9.190E-12 |
| BA-139 | 6.170E-06 | 4.340E-09 | 0.000E+00 | 4.090E-09 | 2.990E-09 | 5.510E-05 | 0.000E+00 | 1.800E-07 |
| BA-140 | 1.960E+02 | 2.410E-01 | 0.000E+00 | 8.160E-02 | 1.620E-01 | 3.030E+02 | 0.000E+00 | 1.260E+01 |
| BA-141 | 9.450E-25 | 7.050E-28 | 0.000E+00 | 6.550E-28 | 4.830E-28 | 2.010E-30 | 0.000E+00 | 3.150E-26 |
| BA-142 | 2.750E-42 | 2.750E-45 | 0.000E+00 | 2.320E-45 | 1.830E-45 | 8.430E-54 | 0.000E+00 | 1.690E-43 |
| LA-140 | 1.050E-01 | 5.160E-02 | 0.000E+00 | 0.000E+00 | 0.000E+00 | 2.960E+03 | 0.000E+00 | 1.370E-02 |
| LA-142 | 2.350E-07 | 1.040E-07 | 0.000E+00 | 0.000E+00 | 0.000E+00 | 3.180E-03 | 0.000E+00 | 2.600E-08 |
| CE-141 | 2.370E-02 | 1.590E-02 | 0.000E+00 | 7.460E-03 | 0.000E+00 | 4.540E+01 | 0.000E+00 | 1.820E-03 |
| CE-143 | 2.590E-03 | 1.880E+00 | 0.000E+00 | 8.450E-04 | 0.000E+00 | 5.660E+01 | 0.000E+00 | 2.100E-04 |
| CE-144 | 1.270E+00 | 5.240E-01 | 0.000E+00 | 3.130E-01 | 0.000E+00 | 3.180E+02 | 0.000E+00 | 6.810E-02 |
| PR-143 | 5.680E-01 | 2.270E-01 | 0.000E+00 | 1.320E-01 | 0.000E+00 | 1.870E+03 | 0.000E+00 | 2.830E-02 |
| PR-144 | 1.690E-28 | 6.900E-29 | 0.000E+00 | 3.960E-29 | 0.000E+00 | 1.860E-31 | 0.000E+00 | 8.550E-30 |
| ND-147 | 4.020E-01 | 4.370E-01 | 0.000E+00 | 2.560E-01 | 0.000E+00 | 1.580E+03 | 0.000E+00 | 2.620E-02 |
| W-187 | 1.590E+02 | 1.300E+02 | 0.000E+00 | 0.000E+00 | 0.000E+00 | 3.510E+04 | 0.000E+00 | 4.540E+01 |
| NP-239 | 2.390E-02 | 2.260E-03 | 0.000E+00 | 7.080E-03 | 0.000E+00 | 3.630E+02 | 0.000E+00 | 1.250E-03 |

# APPENDIX D

## $A_i$ Teen Dose Factors for use in the Liquid Dose Calculations

| Agegroup: | TEEN | Pathway: | Shoreline Sediment (SHDp) | | | Units: | mrem/hr / µCi/ml | |
|---|---|---|---|---|---|---|---|---|
| **Nuclide** | **Bone** | **Liver** | **Thyroid** | **Kidney** | **Lung** | **Gilli** | **Skin** | **Total Body** |
| H-3 | 0.000E+00 | 0.000E+00 | 0.000E+00 | 0.000E+00 | 0.000E+00 | 0.000E+00 | 0.000E+00 | 0.000E+00 |
| C-14 | 0.000E+00 | 0.000E+00 | 0.000E+00 | 0.000E+00 | 0.000E+00 | 0.000E+00 | 0.000E+00 | 0.000E+00 |
| NA-24 | 2.390E+00 | 2.390E+00 | 2.390E+00 | 2.390E+00 | 2.390E+00 | 2.390E+00 | 2.770E+00 | 2.390E+00 |
| P-32 | 0.000E+00 | 0.000E+00 | 0.000E+00 | 0.000E+00 | 0.000E+00 | 0.000E+00 | 0.000E+00 | 0.000E+00 |
| CR-51 | 9.310E-01 | 9.310E-01 | 9.310E-01 | 9.310E-01 | 9.310E-01 | 9.310E-01 | 1.100E+00 | 9.310E-01 |
| MN-54 | 2.770E+02 | 2.770E+02 | 2.770E+02 | 2.770E+02 | 2.770E+02 | 2.770E+02 | 3.250E+02 | 2.770E+02 |
| MN-56 | 1.800E-01 | 1.800E-01 | 1.800E-01 | 1.800E-01 | 1.800E-01 | 1.800E-01 | 2.130E-01 | 1.800E-01 |
| FE-55 | 0.000E+00 | 0.000E+00 | 0.000E+00 | 0.000E+00 | 0.000E+00 | 0.000E+00 | 0.000E+00 | 0.000E+00 |
| FE-59 | 5.450E+01 | 5.450E+01 | 5.450E+01 | 5.450E+01 | 5.450E+01 | 5.450E+01 | 6.410E+01 | 5.450E+01 |
| CO-58 | 7.570E+01 | 7.570E+01 | 7.570E+01 | 7.570E+01 | 7.570E+01 | 7.570E+01 | 8.870E+01 | 7.570E+01 |
| CO-60 | 4.300E+03 | 4.300E+03 | 4.300E+03 | 4.300E+03 | 4.300E+03 | 4.300E+03 | 5.050E+03 | 4.300E+03 |
| NI-63 | 0.000E+00 | 0.000E+00 | 0.000E+00 | 0.000E+00 | 0.000E+00 | 0.000E+00 | 0.000E+00 | 0.000E+00 |
| NI-65 | 5.930E-02 | 5.930E-02 | 5.930E-02 | 5.930E-02 | 5.930E-02 | 5.930E-02 | 6.900E-02 | 5.930E-02 |
| CU-64 | 1.210E-01 | 1.210E-01 | 1.210E-01 | 1.210E-01 | 1.210E-01 | 1.210E-01 | 1.370E-01 | 1.210E-01 |
| ZN-65 | 1.490E+02 | 1.490E+02 | 1.490E+02 | 1.490E+02 | 1.490E+02 | 1.490E+02 | 1.720E+02 | 1.490E+02 |
| ZN-69 | 0.000E+00 | 0.000E+00 | 0.000E+00 | 0.000E+00 | 0.000E+00 | 0.000E+00 | 0.000E+00 | 0.000E+00 |
| BR-83 | 9.730E-04 | 9.730E-04 | 9.730E-04 | 9.730E-04 | 9.730E-04 | 9.730E-04 | 1.410E-03 | 9.730E-04 |
| BR-84 | 4.050E-02 | 4.050E-02 | 4.050E-02 | 4.050E-02 | 4.050E-02 | 4.050E-02 | 4.720E-02 | 4.050E-02 |
| BR-85 | 0.000E+00 | 0.000E+00 | 0.000E+00 | 0.000E+00 | 0.000E+00 | 0.000E+00 | 0.000E+00 | 0.000E+00 |
| RB-86 | 1.800E+00 | 1.800E+00 | 1.800E+00 | 1.800E+00 | 1.800E+00 | 1.800E+00 | 2.050E+00 | 1.800E+00 |
| RB-88 | 6.610E-03 | 6.610E-03 | 6.610E-03 | 6.610E-03 | 6.610E-03 | 6.610E-03 | 7.550E-03 | 6.610E-03 |
| RB-89 | 2.460E-02 | 2.460E-02 | 2.460E-02 | 2.460E-02 | 2.460E-02 | 2.460E-02 | 2.950E-02 | 2.460E-02 |
| SR-89 | 4.320E-03 | 4.320E-03 | 4.320E-03 | 4.320E-03 | 4.320E-03 | 4.320E-03 | 5.020E-03 | 4.320E-03 |
| SR-90 | 0.000E+00 | 0.000E+00 | 0.000E+00 | 0.000E+00 | 0.000E+00 | 0.000E+00 | 0.000E+00 | 0.000E+00 |
| SR-91 | 4.290E-01 | 4.290E-01 | 4.290E-01 | 4.290E-01 | 4.290E-01 | 4.290E-01 | 5.020E-01 | 4.290E-01 |

# APPENDIX D

## $A_i$ Teen Dose Factors for use in the Liquid Dose Calculations

| Agegroup: | TEEN | Pathway: | Shoreline Sediment (SHDp) | | | Units: | mrem/hr / µCi/ml | |
|---|---|---|---|---|---|---|---|---|
| **Nuclide** | **Bone** | **Liver** | **Thyroid** | **Kidney** | **Lung** | **Gilli** | **Skin** | **Total Body** |
| SR-92 | 1.550E-01 | 1.550E-01 | 1.550E-01 | 1.550E-01 | 1.550E-01 | 1.550E-01 | 1.720E-01 | 1.550E-01 |
| Y-90 | 8.970E-04 | 8.970E-04 | 8.970E-04 | 8.970E-04 | 8.970E-04 | 8.970E-04 | 1.060E-03 | 8.970E-04 |
| Y-91 | 2.140E-01 | 2.140E-01 | 2.140E-01 | 2.140E-01 | 2.140E-01 | 2.140E-01 | 2.410E-01 | 2.140E-01 |
| Y-91M | 2.000E-02 | 2.000E-02 | 2.000E-02 | 2.000E-02 | 2.000E-02 | 2.000E-02 | 2.320E-02 | 2.000E-02 |
| Y-92 | 3.600E-02 | 3.600E-02 | 3.600E-02 | 3.600E-02 | 3.600E-02 | 3.600E-02 | 4.280E-02 | 3.600E-02 |
| Y-93 | 3.660E-02 | 3.660E-02 | 3.660E-02 | 3.660E-02 | 3.660E-02 | 3.660E-02 | 5.010E-02 | 3.660E-02 |
| ZR-95 | 4.890E+01 | 4.890E+01 | 4.890E+01 | 4.890E+01 | 4.890E+01 | 4.890E+01 | 5.670E+01 | 4.890E+01 |
| ZR-97 | 5.910E-01 | 5.910E-01 | 5.910E-01 | 5.910E-01 | 5.910E-01 | 5.910E-01 | 6.880E-01 | 5.910E-01 |
| NB-95 | 2.730E+01 | 2.730E+01 | 2.730E+01 | 2.730E+01 | 2.730E+01 | 2.730E+01 | 3.210E+01 | 2.730E+01 |
| MO-99 | 7.980E-01 | 7.980E-01 | 7.980E-01 | 7.980E-01 | 7.980E-01 | 7.980E-01 | 9.240E-01 | 7.980E-01 |
| TC-99M | 3.680E-02 | 3.680E-02 | 3.680E-02 | 3.680E-02 | 3.680E-02 | 3.680E-02 | 4.210E-02 | 3.680E-02 |
| TC-101 | 4.070E-03 | 4.070E-03 | 4.070E-03 | 4.070E-03 | 4.070E-03 | 4.070E-03 | 4.520E-03 | 4.070E-03 |
| RU-103 | 2.160E+01 | 2.160E+01 | 2.160E+01 | 2.160E+01 | 2.160E+01 | 2.160E+01 | 2.520E+01 | 2.160E+01 |
| RU-105 | 1.270E-01 | 1.270E-01 | 1.270E-01 | 1.270E-01 | 1.270E-01 | 1.270E-01 | 1.440E-01 | 1.270E-01 |
| RU-106 | 8.430E+01 | 8.430E+01 | 8.430E+01 | 8.430E+01 | 8.430E+01 | 8.430E+01 | 1.010E+02 | 8.430E+01 |
| AG-110M | 6.870E+02 | 6.870E+02 | 6.870E+02 | 6.870E+02 | 6.870E+02 | 6.870E+02 | 8.010E+02 | 6.870E+02 |
| TE-125M | 3.100E-01 | 3.100E-01 | 3.100E-01 | 3.100E-01 | 3.100E-01 | 3.100E-01 | 4.250E-01 | 3.100E-01 |
| TE-127 | 5.950E-04 | 5.950E-04 | 5.950E-04 | 5.950E-04 | 5.950E-04 | 5.950E-04 | 6.540E-04 | 5.950E-04 |
| TE-127M | 1.830E-02 | 1.830E-02 | 1.830E-02 | 1.830E-02 | 1.830E-02 | 1.830E-02 | 2.160E-02 | 1.830E-02 |
| TE-129 | 5.240E-03 | 5.240E-03 | 5.240E-03 | 5.240E-03 | 5.240E-03 | 5.240E-03 | 6.200E-03 | 5.240E-03 |
| TE-129M | 3.950E+00 | 3.950E+00 | 3.950E+00 | 3.950E+00 | 3.950E+00 | 3.950E+00 | 4.620E+00 | 3.950E+00 |
| TE-131 | 5.830E-03 | 5.830E-03 | 5.830E-03 | 5.830E-03 | 5.830E-03 | 5.830E-03 | 6.890E+00 | 5.830E-03 |
| TE-131M | 1.600E+00 | 1.600E+00 | 1.600E+00 | 1.600E+00 | 1.600E+00 | 1.600E+00 | 1.890E+00 | 1.600E+00 |
| TE-132 | 8.460E-01 | 8.460E-01 | 8.460E-01 | 8.460E-01 | 8.460E-01 | 8.460E-01 | 9.950E-01 | 8.460E-01 |
| I-130 | 1.100E+00 | 1.100E+00 | 1.100E+00 | 1.100E+00 | 1.100E+00 | 1.100E+00 | 1.340E+00 | 1.100E+00 |

# APPENDIX D

## $A_i$ Teen Dose Factors for use in the Liquid Dose Calculations

| Agegroup: | TEEN | Pathway: | Shoreline Sediment (SHDp) | | | Units: | mrem/hr / µCi/ml | |
|---|---|---|---|---|---|---|---|---|
| **Nuclide** | **Bone** | **Liver** | **Thyroid** | **Kidney** | **Lung** | **Gilli** | **Skin** | **Total Body** |
| I-131 | 3.440E+00 | 3.440E+00 | 3.440E+00 | 3.440E+00 | 3.440E+00 | 3.440E+00 | 4.170E+00 | 3.440E+00 |
| I-132 | 2.490E-01 | 2.490E-01 | 2.490E-01 | 2.490E-01 | 2.490E-01 | 2.490E-01 | 2.930E-01 | 2.490E-01 |
| I-133 | 4.900E-01 | 4.900E-01 | 4.900E-01 | 4.900E-01 | 4.900E-01 | 4.900E-01 | 5.960E-01 | 4.900E-01 |
| I-134 | 8.930E-02 | 8.930E-02 | 8.930E-02 | 8.930E-02 | 8.930E-02 | 8.930E-02 | 1.060E-01 | 8.930E-02 |
| I-135 | 5.050E-01 | 5.050E-01 | 5.050E-01 | 5.050E-01 | 5.050E-01 | 5.050E-01 | 5.890E-01 | 5.050E-01 |
| CS-134 | 1.370E+03 | 1.370E+03 | 1.370E+03 | 1.370E+03 | 1.370E+03 | 1.370E+03 | 1.600E+03 | 1.370E+03 |
| CS-136 | 3.010E+01 | 3.010E+01 | 3.010E+01 | 3.010E+01 | 3.010E+01 | 3.010E+01 | 3.420E+01 | 3.010E+01 |
| CS-137 | 2.050E+03 | 2.050E+03 | 2.050E+03 | 2.050E+03 | 2.050E+03 | 2.050E+03 | 2.400E+03 | 2.050E+03 |
| CS-138 | 7.170E-02 | 7.170E-02 | 7.170E-02 | 7.170E-02 | 7.170E-02 | 7.170E-02 | 8.200E-02 | 7.170E-02 |
| BA-139 | 2.120E-02 | 2.120E-02 | 2.120E-02 | 2.120E-02 | 2.120E-02 | 2.120E-02 | 2.380E-02 | 2.120E-02 |
| BA-140 | 4.100E+00 | 4.100E+00 | 4.100E+00 | 4.100E+00 | 4.100E+00 | 4.100E+00 | 4.690E+00 | 4.100E+00 |
| BA-141 | 8.330E-03 | 8.330E-03 | 8.330E-03 | 8.330E-03 | 8.330E-03 | 8.330E-03 | 9.490E-03 | 8.330E-03 |
| BA-142 | 8.970E-03 | 8.970E-03 | 8.970E-03 | 8.970E-03 | 8.970E-03 | 8.970E-03 | 1.020E-02 | 8.970E-03 |
| LA-140 | 3.840E+00 | 3.840E+00 | 3.840E+00 | 3.840E+00 | 3.840E+00 | 3.840E+00 | 4.350E+00 | 3.840E+00 |
| LA-142 | 1.520E-01 | 1.520E-01 | 1.520E-01 | 1.520E-01 | 1.520E-01 | 1.520E-01 | 1.820E-01 | 1.520E-01 |
| CE-141 | 2.730E+00 | 2.730E+00 | 2.730E+00 | 2.730E+00 | 2.730E+00 | 2.730E+00 | 3.080E+00 | 2.730E+00 |
| CE-143 | 4.620E-01 | 4.620E-01 | 4.620E-01 | 4.620E-01 | 4.620E-01 | 4.620E-01 | 5.250E-01 | 4.620E-01 |
| CE-144 | 1.390E+01 | 1.390E+01 | 1.390E+01 | 1.390E+01 | 1.390E+01 | 1.390E+01 | 1.610E+01 | 1.390E+01 |
| PR-143 | 0.000E+00 | 0.000E+00 | 0.000E+00 | 0.000E+00 | 0.000E+00 | 0.000E+00 | 0.000E+00 | 0.000E+00 |
| PR-144 | 3.670E-04 | 3.670E-04 | 3.670E-04 | 3.670E-04 | 3.670E-04 | 3.670E-04 | 4.220E-04 | 3.670E-04 |
| ND-147 | 1.680E+00 | 1.680E+00 | 1.680E+00 | 1.680E+00 | 1.680E+00 | 1.680E+00 | 2.010E+00 | 1.680E+00 |
| W-187 | 4.700E-01 | 4.700E-01 | 4.700E-01 | 4.700E-01 | 4.700E-01 | 4.700E-01 | 5.460E-01 | 4.700E-01 |
| NP-239 | 3.420E-01 | 3.420E-01 | 3.420E-01 | 3.420E-01 | 3.420E-01 | 3.420E-01 | 3.960E-01 | 3.420E-01 |

# APPENDIX E

## $A_i$ Child Dose Factors for use in the Liquid Dose Calculations

| Agegroup: | CHILD | Pathway: | Potable Water (PWtr) | | | Units: | mrem/hr / µCi/ml | |
|---|---|---|---|---|---|---|---|---|
| **Nuclide** | **Bone** | **Liver** | **Thyroid** | **Kidney** | **Lung** | **Gilli** | **Skin** | **Total Body** |
| H-3 | 0.000E+00 | 1.180E+01 | 1.180E+01 | 1.180E+01 | 1.180E+01 | 1.180E+01 | 0.000E+00 | 1.180E+01 |
| C-14 | 7.030E+02 | 1.410E+02 | 1.410E+02 | 1.410E+02 | 1.410E+02 | 1.410E+02 | 0.000E+00 | 1.410E+02 |
| NA-24 | 1.940E+02 | 1.940E+02 | 1.940E+02 | 1.940E+02 | 1.940E+02 | 1.940E+02 | 0.000E+00 | 1.940E+02 |
| P-32 | 4.680E+04 | 2.190E+03 | 0.000E+00 | 0.000E+00 | 0.000E+00 | 1.290E+03 | 0.000E+00 | 1.800E+03 |
| CR-51 | 0.000E+00 | 0.000E+00 | 2.840E-01 | 7.750E-02 | 5.180E-01 | 2.710E+01 | 0.000E+00 | 5.110E-01 |
| MN-54 | 0.000E+00 | 6.210E+02 | 0.000E+00 | 1.740E+02 | 0.000E+00 | 5.220E+02 | 0.000E+00 | 1.660E+02 |
| MN-56 | 0.000E+00 | 7.700E-01 | 0.000E+00 | 9.320E-01 | 0.000E+00 | 1.120E+02 | 0.000E+00 | 1.740E-01 |
| FE-55 | 6.680E+02 | 3.550E+02 | 0.000E+00 | 0.000E+00 | 2.010E+02 | 6.570E+01 | 0.000E+00 | 1.100E+02 |
| FE-59 | 9.520E+02 | 1.540E+03 | 0.000E+00 | 0.000E+00 | 4.470E+02 | 1.600E+03 | 0.000E+00 | 7.670E+02 |
| CO-58 | 0.000E+00 | 1.040E+02 | 0.000E+00 | 0.000E+00 | 0.000E+00 | 6.070E+02 | 0.000E+00 | 3.190E+02 |
| CO-60 | 0.000E+00 | 3.080E+02 | 0.000E+00 | 0.000E+00 | 0.000E+00 | 1.700E+03 | 0.000E+00 | 9.070E+02 |
| NI-63 | 3.130E+04 | 1.670E+03 | 0.000E+00 | 0.000E+00 | 0.000E+00 | 1.130E+02 | 0.000E+00 | 1.060E+03 |
| NI-65 | 4.760E+00 | 4.480E-01 | 0.000E+00 | 0.000E+00 | 0.000E+00 | 5.490E+01 | 0.000E+00 | 2.610E-01 |
| CU-64 | 0.000E+00 | 7.390E+00 | 0.000E+00 | 1.780E+01 | 0.000E+00 | 3.470E+02 | 0.000E+00 | 4.460E+00 |
| ZN-65 | 7.950E+02 | 2.120E+03 | 0.000E+00 | 1.340E+03 | 0.000E+00 | 3.720E+02 | 0.000E+00 | 1.320E+03 |
| ZN-69 | 3.190E-04 | 4.610E-04 | 0.000E+00 | 2.800E-04 | 0.000E+00 | 2.900E-02 | 0.000E+00 | 4.260E-05 |
| BR-83 | 0.000E+00 | 0.000E+00 | 0.000E+00 | 0.000E+00 | 0.000E+00 | 0.000E+00 | 0.000E+00 | 3.060E-01 |
| BR-84 | 0.000E+00 | 0.000E+00 | 0.000E+00 | 0.000E+00 | 0.000E+00 | 0.000E+00 | 0.000E+00 | 1.780E-06 |
| BR-85 | 0.000E+00 | 0.000E+00 | 0.000E+00 | 0.000E+00 | 0.000E+00 | 0.000E+00 | 0.000E+00 | 1.300E-76 |
| RB-86 | 0.000E+00 | 3.820E+03 | 0.000E+00 | 0.000E+00 | 0.000E+00 | 2.460E+02 | 0.000E+00 | 2.350E+03 |
| RB-88 | 0.000E+00 | 7.360E-12 | 0.000E+00 | 0.000E+00 | 0.000E+00 | 3.610E-13 | 0.000E+00 | 5.110E-12 |
| RB-89 | 0.000E+00 | 6.300E-14 | 0.000E+00 | 0.000E+00 | 0.000E+00 | 5.490E-16 | 0.000E+00 | 5.600E-14 |
| SR-89 | 7.620E+04 | 0.000E+00 | 0.000E+00 | 0.000E+00 | 0.000E+00 | 2.950E+03 | 0.000E+00 | 2.180E+03 |
| SR-90 | 9.880E+05 | 0.000E+00 | 0.000E+00 | 0.000E+00 | 0.000E+00 | 1.330E+04 | 0.000E+00 | 2.510E+05 |
| SR-91 | 5.810E+02 | 0.000E+00 | 0.000E+00 | 0.000E+00 | 0.000E+00 | 1.280E+03 | 0.000E+00 | 2.190E+01 |

# APPENDIX E

## $A_i$ Child Dose Factors for use in the Liquid Dose Calculations

| Agegroup: | CHILD | Pathway: | Potable Water (PWtr) | | | Units: | mrem/hr / µCi/ml | |
|---|---|---|---|---|---|---|---|---|
| **Nuclide** | **Bone** | **Liver** | **Thyroid** | **Kidney** | **Lung** | **Gilli** | **Skin** | **Total Body** |
| SR-92 | 2.430E+01 | 0.000E+00 | 0.000E+00 | 0.000E+00 | 0.000E+00 | 4.610E+02 | 0.000E+00 | 9.760E-01 |
| Y-90 | 2.100E+00 | 0.000E+00 | 0.000E+00 | 0.000E+00 | 0.000E+00 | 5.980E+03 | 0.000E+00 | 5.620E-02 |
| Y-91 | 3.480E+01 | 0.000E+00 | 0.000E+00 | 0.000E+00 | 0.000E+00 | 4.640E+03 | 0.000E+00 | 9.310E-01 |
| Y-91M | 9.860E-07 | 0.000E+00 | 0.000E+00 | 0.000E+00 | 0.000E+00 | 1.930E-03 | 0.000E+00 | 3.590E-08 |
| Y-92 | 2.000E-02 | 0.000E+00 | 0.000E+00 | 0.000E+00 | 0.000E+00 | 5.770E+02 | 0.000E+00 | 5.710E-04 |
| Y-93 | 2.900E-01 | 0.000E+00 | 0.000E+00 | 0.000E+00 | 0.000E+00 | 4.330E+03 | 0.000E+00 | 7.970E-03 |
| ZR-95 | 6.710E+00 | 1.470E+00 | 0.000E+00 | 2.110E+00 | 0.000E+00 | 1.540E+03 | 0.000E+00 | 1.310E+00 |
| ZR-97 | 2.480E-01 | 3.590E-02 | 0.000E+00 | 5.150E-02 | 0.000E+00 | 5.440E+03 | 0.000E+00 | 2.120E-02 |
| NB-95 | 1.300E+00 | 5.040E-01 | 0.000E+00 | 4.740E-01 | 0.000E+00 | 9.330E+02 | 0.000E+00 | 3.600E-01 |
| MO-99 | 0.000E+00 | 6.820E+02 | 0.000E+00 | 1.460E+03 | 0.000E+00 | 5.640E+02 | 0.000E+00 | 1.690E+02 |
| TC-99M | 1.350E-02 | 2.640E-02 | 0.000E+00 | 3.840E-01 | 1.340E-02 | 1.500E+01 | 0.000E+00 | 4.380E-01 |
| TC-101 | 3.330E-17 | 3.480E-17 | 0.000E+00 | 5.940E-16 | 1.840E-17 | 1.110E-16 | 0.000E+00 | 4.410E-16 |
| RU-103 | 4.210E+01 | 0.000E+00 | 0.000E+00 | 1.060E+02 | 0.000E+00 | 1.090E+03 | 0.000E+00 | 1.620E+01 |
| RU-105 | 5.750E-01 | 0.000E+00 | 0.000E+00 | 5.060E+00 | 0.000E+00 | 3.750E+02 | 0.000E+00 | 2.090E-01 |
| RU-106 | 6.800E+02 | 0.000E+00 | 0.000E+00 | 9.180E+02 | 0.000E+00 | 1.060E+04 | 0.000E+00 | 8.480E+01 |
| AG-110M | 3.130E+01 | 2.110E+01 | 0.000E+00 | 3.940E+01 | 0.000E+00 | 2.510E+03 | 0.000E+00 | 1.690E+01 |
| TE-125M | 6.590E+02 | 1.790E+02 | 1.850E+02 | 0.000E+00 | 0.000E+00 | 6.360E+02 | 0.000E+00 | 8.780E+01 |
| TE-127 | 1.130E+01 | 3.050E+00 | 7.820E+00 | 3.210E+01 | 0.000E+00 | 4.410E+02 | 0.000E+00 | 2.420E+00 |
| TE-127M | 1.670E+03 | 4.510E+02 | 4.000E+02 | 4.780E+03 | 0.000E+00 | 1.360E+03 | 0.000E+00 | 1.990E+02 |
| TE-129 | 5.730E-03 | 1.600E-03 | 4.090E-03 | 1.680E-02 | 0.000E+00 | 3.570E-01 | 0.000E+00 | 1.360E-03 |
| TE-129M | 2.800E+03 | 7.830E+02 | 9.030E+02 | 8.230E+03 | 0.000E+00 | 3.420E+03 | 0.000E+00 | 4.350E+02 |
| TE-131 | 1.040E-08 | 3.160E-09 | 7.930E-09 | 3.140E-08 | 0.000E+00 | 5.450E-08 | 0.000E+00 | 3.090E-09 |
| TE-131M | 3.170E+02 | 1.100E+02 | 2.260E+02 | 1.060E+03 | 0.000E+00 | 4.450E+03 | 0.000E+00 | 1.170E+02 |
| TE-132 | 5.280E+02 | 2.340E+02 | 3.400E+02 | 2.170E+03 | 0.000E+00 | 2.350E+03 | 0.000E+00 | 2.820E+02 |
| I-130 | 8.650E+01 | 1.750E+02 | 1.930E+04 | 2.610E+02 | 0.000E+00 | 8.180E+01 | 0.000E+00 | 9.010E+01 |

# APPENDIX E

## $A_i$ Child Dose Factors for use in the Liquid Dose Calculations

| Agegroup: | CHILD | Pathway: | Potable Water (PWtr) | | | Units: | mrem/hr / µCi/ml | |
|---|---|---|---|---|---|---|---|---|
| **Nuclide** | **Bone** | **Liver** | **Thyroid** | **Kidney** | **Lung** | **Gilli** | **Skin** | **Total Body** |
| I-131 | 9.580E+02 | 9.630E+02 | 3.190E+05 | 1.580E+03 | 0.000E+00 | 8.580E+01 | 0.000E+00 | 5.470E+02 |
| I-132 | 1.250E+00 | 2.300E+00 | 1.070E+02 | 3.520E+00 | 0.000E+00 | 2.710E+00 | 0.000E+00 | 1.060E+00 |
| I-133 | 2.310E+02 | 2.850E+02 | 5.300E+04 | 4.750E+02 | 0.000E+00 | 1.150E+02 | 0.000E+00 | 1.080E+02 |
| I-134 | 1.820E-03 | 3.370E-03 | 7.760E-02 | 5.160E-03 | 0.000E+00 | 2.240E-03 | 0.000E+00 | 1.550E-03 |
| I-135 | 2.890E+01 | 5.210E+01 | 4.610E+03 | 7.990E+01 | 0.000E+00 | 3.970E+01 | 0.000E+00 | 2.460E+01 |
| CS-134 | 1.360E+04 | 2.230E+04 | 0.000E+00 | 6.920E+03 | 2.480E+03 | 1.200E+02 | 0.000E+00 | 4.710E+03 |
| CS-136 | 1.330E+03 | 3.660E+03 | 0.000E+00 | 1.950E+03 | 2.910E+02 | 1.290E+02 | 0.000E+00 | 2.370E+03 |
| CS-137 | 1.900E+04 | 1.820E+04 | 0.000E+00 | 5.930E+03 | 2.130E+03 | 1.140E+02 | 0.000E+00 | 2.690E+03 |
| CS-138 | 2.440E-06 | 3.390E-06 | 0.000E+00 | 2.380E-06 | 2.570E-07 | 1.560E-06 | 0.000E+00 | 2.150E-06 |
| BA-139 | 5.940E-02 | 3.170E-05 | 0.000E+00 | 2.770E-05 | 1.860E-05 | 3.430E+00 | 0.000E+00 | 1.720E-03 |
| BA-140 | 4.700E+03 | 4.120E+00 | 0.000E+00 | 1.340E+00 | 2.460E+00 | 2.380E+03 | 0.000E+00 | 2.740E+02 |
| BA-141 | 1.620E-11 | 9.050E-15 | 0.000E+00 | 7.830E-15 | 5.310E-14 | 9.210E-12 | 0.000E+00 | 5.260E-13 |
| BA-142 | 1.800E-20 | 1.300E-23 | 0.000E+00 | 1.050E-23 | 7.630E-24 | 2.350E-22 | 0.000E+00 | 1.010E-21 |
| LA-140 | 4.780E-01 | 1.670E-01 | 0.000E+00 | 0.000E+00 | 0.000E+00 | 4.650E+03 | 0.000E+00 | 5.630E-02 |
| LA-142 | 1.640E-04 | 5.210E-05 | 0.000E+00 | 0.000E+00 | 0.000E+00 | 1.030E+01 | 0.000E+00 | 1.630E-05 |
| CE-141 | 2.280E+00 | 1.140E+00 | 0.000E+00 | 4.990E-01 | 0.000E+00 | 1.420E+03 | 0.000E+00 | 1.690E-01 |
| CE-143 | 3.160E-01 | 1.710E+02 | 0.000E+00 | 7.180E-02 | 0.000E+00 | 2.510E+03 | 0.000E+00 | 2.480E-02 |
| CE-144 | 1.210E+02 | 3.790E+01 | 0.000E+00 | 2.100E+01 | 0.000E+00 | 9.870E+03 | 0.000E+00 | 6.450E+00 |
| PR-143 | 2.230E+00 | 6.690E-01 | 0.000E+00 | 3.620E-01 | 0.000E+00 | 2.400E+03 | 0.000E+00 | 1.110E-01 |
| PR-144 | 2.200E-15 | 6.800E-16 | 0.000E+00 | 3.600E-16 | 0.000E+00 | 1.460E-12 | 0.000E+00 | 1.110E-16 |
| ND-147 | 1.570E+00 | 1.270E+00 | 0.000E+00 | 6.990E-01 | 0.000E+00 | 2.020E+03 | 0.000E+00 | 9.860E-02 |
| W-187 | 1.760E+01 | 1.040E+01 | 0.000E+00 | 0.000E+00 | 0.000E+00 | 1.460E+03 | 0.000E+00 | 4.680E+00 |
| NP-239 | 2.630E-01 | 1.890E-02 | 0.000E+00 | 5.470E-02 | 0.000E+00 | 1.400E+03 | 0.000E+00 | 1.330E-02 |

# APPENDIX E

## $A_i$ Child Dose Factors for use in the Liquid Dose Calculations

| Agegroup: | CHILD | Pathway: | Fresh Water Fish - Sport (FFSP) | | | Units: | mrem/hr / µCi/ml | |
|---|---|---|---|---|---|---|---|---|
| **Nuclide** | **Bone** | **Liver** | **Thyroid** | **Kidney** | **Lung** | **Gilli** | **Skin** | **Total Body** |
| H-3 | 0.000E+00 | 1.440E-01 | 1.440E-01 | 1.440E-01 | 1.440E-01 | 1.440E-01 | 0.000E+00 | 1.440E-01 |
| C-14 | 4.380E+04 | 8.760E+03 | 8.760E+03 | 8.760E+03 | 8.760E+03 | 8.760E+03 | 0.000E+00 | 8.760E+03 |
| NA-24 | 1.510E+02 | 1.510E+02 | 1.510E+02 | 1.510E+02 | 1.510E+02 | 1.510E+02 | 0.000E+00 | 1.510E+02 |
| P-32 | 1.850E+06 | 8.680E+04 | 0.000E+00 | 0.000E+00 | 0.000E+00 | 5.130E+04 | 0.000E+00 | 7.150E+04 |
| CR-51 | 0.000E+00 | 0.000E+00 | 7.580E-01 | 2.070E-01 | 1.380E+00 | 7.240E+01 | 0.000E+00 | 1.370E+00 |
| MN-54 | 0.000E+00 | 3.360E+03 | 0.000E+00 | 9.420E+02 | 0.000E+00 | 2.820E+03 | 0.000E+00 | 8.950E+02 |
| MN-56 | 0.000E+00 | 1.650E-01 | 0.000E+00 | 2.000E-01 | 0.000E+00 | 2.400E+01 | 0.000E+00 | 3.730E-02 |
| FE-55 | 9.040E+02 | 4.790E+02 | 0.000E+00 | 0.000E+00 | 2.710E+02 | 8.880E+01 | 0.000E+00 | 1.490E+02 |
| FE-59 | 1.280E+03 | 2.070E+03 | 0.000E+00 | 0.000E+00 | 5.990E+02 | 2.150E+03 | 0.000E+00 | 1.030E+03 |
| CO-58 | 0.000E+00 | 7.010E+01 | 0.000E+00 | 0.000E+00 | 0.000E+00 | 4.090E+02 | 0.000E+00 | 2.150E+02 |
| CO-60 | 0.000E+00 | 2.080E+02 | 0.000E+00 | 0.000E+00 | 0.000E+00 | 1.150E+03 | 0.000E+00 | 6.130E+02 |
| NI-63 | 4.230E+04 | 2.270E+03 | 0.000E+00 | 0.000E+00 | 0.000E+00 | 1.530E+02 | 0.000E+00 | 1.440E+03 |
| NI-65 | 2.370E-01 | 2.230E-02 | 0.000E+00 | 0.000E+00 | 0.000E+00 | 2.740E+00 | 0.000E+00 | 1.300E-02 |
| CU-64 | 0.000E+00 | 2.590E+00 | 0.000E+00 | 6.260E+00 | 0.000E+00 | 1.220E+02 | 0.000E+00 | 1.570E+00 |
| ZN-65 | 2.150E+04 | 5.730E+04 | 0.000E+00 | 3.610E+04 | 0.000E+00 | 1.010E+04 | 0.000E+00 | 3.560E+04 |
| ZN-69 | 1.080E-06 | 1.560E-06 | 0.000E+00 | 9.470E-07 | 0.000E+00 | 9.840E-05 | 0.000E+00 | 1.440E-07 |
| BR-83 | 0.000E+00 | 0.000E+00 | 0.000E+00 | 0.000E+00 | 0.000E+00 | 0.000E+00 | 0.000E+00 | 5.340E-02 |
| BR-84 | 0.000E+00 | 0.000E+00 | 0.000E+00 | 0.000E+00 | 0.000E+00 | 0.000E+00 | 0.000E+00 | 1.570E-12 |
| BR-85 | 0.000E+00 | 0.000E+00 | 0.000E+00 | 0.000E+00 | 0.000E+00 | 0.000E+00 | 0.000E+00 | 0.000E+00 |
| RB-86 | 0.000E+00 | 1.020E+05 | 0.000E+00 | 0.000E+00 | 0.000E+00 | 6.530E+03 | 0.000E+00 | 6.250E+04 |
| RB-88 | 0.000E+00 | 1.330E-22 | 0.000E+00 | 0.000E+00 | 0.000E+00 | 6.510E-24 | 0.000E+00 | 9.220E-23 |
| RB-89 | 0.000E+00 | 1.580E-26 | 0.000E+00 | 0.000E+00 | 0.000E+00 | 1.370E-28 | 0.000E+00 | 1.400E-26 |
| SR-89 | 3.070E+04 | 0.000E+00 | 0.000E+00 | 0.000E+00 | 0.000E+00 | 1.190E+03 | 0.000E+00 | 8.780E+02 |
| SR-90 | 4.010E+05 | 0.000E+00 | 0.000E+00 | 0.000E+00 | 0.000E+00 | 5.400E+03 | 0.000E+00 | 1.020E+05 |
| SR-91 | 9.800E+01 | 0.000E+00 | 0.000E+00 | 0.000E+00 | 0.000E+00 | 2.160E+02 | 0.000E+00 | 3.700E+00 |

# APPENDIX E

## $A_i$ Child Dose Factors for use in the Liquid Dose Calculations

| Agegroup: | CHILD | Pathway: | Fresh Water Fish - Sport (FFSP) | | | Units: | mrem/hr / µCi/ml | |
|---|---|---|---|---|---|---|---|---|
| **Nuclide** | **Bone** | **Liver** | **Thyroid** | **Kidney** | **Lung** | **Gilli** | **Skin** | **Total Body** |
| SR-92 | 4.580E-01 | 0.000E+00 | 0.000E+00 | 0.000E+00 | 0.000E+00 | 8.670E+00 | 0.000E+00 | 1.840E-02 |
| Y-90 | 6.240E-01 | 0.000E+00 | 0.000E+00 | 0.000E+00 | 0.000E+00 | 1.780E+03 | 0.000E+00 | 1.670E-02 |
| Y-91 | 1.170E+01 | 0.000E+00 | 0.000E+00 | 0.000E+00 | 0.000E+00 | 1.560E+03 | 0.000E+00 | 3.130E-01 |
| Y-91M | 1.480E-11 | 0.000E+00 | 0.000E+00 | 0.000E+00 | 0.000E+00 | 2.900E-08 | 0.000E+00 | 5.390E-13 |
| Y-92 | 6.440E-04 | 0.000E+00 | 0.000E+00 | 0.000E+00 | 0.000E+00 | 1.860E+01 | 0.000E+00 | 1.840E-05 |
| Y-93 | 4.300E-02 | 0.000E+00 | 0.000E+00 | 0.000E+00 | 0.000E+00 | 6.420E+02 | 0.000E+00 | 1.180E-03 |
| ZR-95 | 2.980E-01 | 6.550E-02 | 0.000E+00 | 9.370E-02 | 0.000E+00 | 6.830E+01 | 0.000E+00 | 5.830E-02 |
| ZR-97 | 6.780E-03 | 9.790E-04 | 0.000E+00 | 1.410E-03 | 0.000E+00 | 1.480E+02 | 0.000E+00 | 5.780E-04 |
| NB-95 | 5.210E+02 | 2.030E+02 | 0.000E+00 | 1.900E+02 | 0.000E+00 | 3.750E+05 | 0.000E+00 | 1.450E+02 |
| MO-99 | 0.000E+00 | 8.130E+01 | 0.000E+00 | 1.740E+02 | 0.000E+00 | 6.720E+01 | 0.000E+00 | 2.010E+01 |
| TC-99M | 6.860E-04 | 1.350E-03 | 0.000E+00 | 1.950E-02 | 6.830E-04 | 7.650E-01 | 0.000E+00 | 2.230E-02 |
| TC-101 | 3.610E-33 | 3.780E-33 | 0.000E+00 | 6.440E-32 | 2.000E-33 | 1.200E-32 | 0.000E+00 | 4.790E-32 |
| RU-103 | 5.650E+00 | 0.000E+00 | 0.000E+00 | 1.420E+01 | 0.000E+00 | 1.460E+02 | 0.000E+00 | 2.170E+00 |
| RU-105 | 1.190E-02 | 0.000E+00 | 0.000E+00 | 1.050E-01 | 0.000E+00 | 7.790E+00 | 0.000E+00 | 4.330E-03 |
| RU-106 | 9.190E+01 | 0.000E+00 | 0.000E+00 | 1.240E+02 | 0.000E+00 | 1.430E+03 | 0.000E+00 | 1.150E+01 |
| AG-110M | 9.720E-01 | 6.570E-01 | 0.000E+00 | 1.220E+00 | 0.000E+00 | 7.810E+01 | 0.000E+00 | 5.250E-01 |
| TE-125M | 3.540E+03 | 9.610E+02 | 9.950E+02 | 0.000E+00 | 0.000E+00 | 3.420E+03 | 0.000E+00 | 4.730E+02 |
| TE-127 | 2.520E+01 | 6.800E+00 | 1.750E+01 | 7.170E+01 | 0.000E+00 | 9.850E+02 | 0.000E+00 | 5.410E+00 |
| TE-127M | 9.040E+03 | 2.430E+03 | 2.160E+03 | 2.580E+04 | 0.000E+00 | 7.320E+03 | 0.000E+00 | 1.070E+03 |
| TE-129 | 2.280E-05 | 6.370E-06 | 1.630E-05 | 6.680E-05 | 0.000E+00 | 1.420E-03 | 0.000E+00 | 5.420E-06 |
| TE-129M | 1.500E+04 | 4.190E+03 | 4.840E+03 | 4.410E+04 | 0.000E+00 | 1.830E+04 | 0.000E+00 | 2.330E+03 |
| TE-131 | 1.210E-16 | 3.680E-17 | 9.220E-17 | 3.650E-16 | 0.000E+00 | 6.330E-16 | 0.000E+00 | 3.590E-17 |
| TE-131M | 1.300E+03 | 4.500E+02 | 9.250E+02 | 4.350E+03 | 0.000E+00 | 1.820E+04 | 0.000E+00 | 4.790E+02 |
| TE-132 | 2.570E+03 | 1.140E+03 | 1.650E+03 | 1.050E+04 | 0.000E+00 | 1.140E+04 | 0.000E+00 | 1.370E+03 |
| I-130 | 8.950E+00 | 1.810E+01 | 1.990E+03 | 2.700E+01 | 0.000E+00 | 8.460E+00 | 0.000E+00 | 9.320E+00 |

# APPENDIX E

## $A_i$ Child Dose Factors for use in the Liquid Dose Calculations

| Agegroup: | CHILD | Pathway: | Fresh Water Fish - Sport (FFSP) | | | Units: | mrem/hr / µCi/ml | |
|---|---|---|---|---|---|---|---|---|
| **Nuclide** | **Bone** | **Liver** | **Thyroid** | **Kidney** | **Lung** | **Gilli** | **Skin** | **Total Body** |
| I-131 | 1.860E+02 | 1.870E+02 | 6.190E+04 | 3.070E+02 | 0.000E+00 | 1.670E+01 | 0.000E+00 | 1.060E+02 |
| I-132 | 6.830E-03 | 1.250E-02 | 5.820E-01 | 1.920E-02 | 0.000E+00 | 1.480E-02 | 0.000E+00 | 5.770E-03 |
| I-133 | 3.140E+01 | 3.880E+01 | 7.210E+03 | 6.470E+01 | 0.000E+00 | 1.560E+01 | 0.000E+00 | 1.470E+01 |
| I-134 | 2.750E-08 | 5.100E-08 | 1.170E-06 | 7.800E-08 | 0.000E+00 | 3.380E-08 | 0.000E+00 | 2.350E-08 |
| I-135 | 1.670E+00 | 3.010E+00 | 2.660E+02 | 4.610E+00 | 0.000E+00 | 2.290E+00 | 0.000E+00 | 1.420E+00 |
| CS-134 | 3.680E+05 | 6.040E+05 | 0.000E+00 | 1.870E+05 | 6.710E+04 | 3.250E+03 | 0.000E+00 | 1.270E+05 |
| CS-136 | 3.510E+04 | 9.640E+04 | 0.000E+00 | 5.130E+04 | 7.660E+03 | 3.390E+03 | 0.000E+00 | 6.240E+04 |
| CS-137 | 5.140E+05 | 4.920E+05 | 0.000E+00 | 1.600E+05 | 5.770E+04 | 3.080E+03 | 0.000E+00 | 7.270E+04 |
| CS-138 | 1.210E-11 | 1.690E-11 | 0.000E+00 | 1.190E-11 | 1.280E-12 | 7.770E-12 | 0.000E+00 | 1.070E-11 |
| BA-139 | 7.930E-06 | 4.230E-09 | 0.000E+00 | 3.700E-09 | 2.490E-09 | 4.580E-04 | 0.000E+00 | 2.300E-07 |
| BA-140 | 2.480E+02 | 2.170E-01 | 0.000E+00 | 7.060E-02 | 1.290E-01 | 1.250E+02 | 0.000E+00 | 1.450E+01 |
| BA-141 | 1.210E-24 | 6.800E-28 | 0.000E+00 | 5.880E-28 | 3.990E-27 | 6.920E-25 | 0.000E+00 | 3.950E-26 |
| BA-142 | 3.460E-42 | 2.490E-45 | 0.000E+00 | 2.020E-45 | 1.470E-45 | 4.510E-44 | 0.000E+00 | 1.930E-43 |
| LA-140 | 1.310E-01 | 4.590E-02 | 0.000E+00 | 0.000E+00 | 0.000E+00 | 1.280E+03 | 0.000E+00 | 1.550E-02 |
| LA-142 | 2.970E-07 | 9.470E-08 | 0.000E+00 | 0.000E+00 | 0.000E+00 | 1.880E-02 | 0.000E+00 | 2.960E-08 |
| CE-141 | 3.060E-02 | 1.520E-02 | 0.000E+00 | 6.680E-03 | 0.000E+00 | 1.900E+01 | 0.000E+00 | 2.260E-03 |
| CE-143 | 3.320E-03 | 1.800E+00 | 0.000E+00 | 7.550E-04 | 0.000E+00 | 2.640E+01 | 0.000E+00 | 2.610E-04 |
| CE-144 | 1.630E+00 | 5.120E-01 | 0.000E+00 | 2.830E-01 | 0.000E+00 | 1.330E+02 | 0.000E+00 | 8.710E-02 |
| PR-143 | 7.340E-01 | 2.200E-01 | 0.000E+00 | 1.190E-01 | 0.000E+00 | 7.920E+02 | 0.000E+00 | 3.640E-02 |
| PR-144 | 2.180E-28 | 6.750E-29 | 0.000E+00 | 3.570E-29 | 0.000E+00 | 1.450E-25 | 0.000E+00 | 1.100E-29 |
| ND-147 | 5.150E-01 | 4.170E-01 | 0.000E+00 | 2.290E-01 | 0.000E+00 | 6.610E+02 | 0.000E+00 | 3.230E-02 |
| W-187 | 2.010E+02 | 1.190E+02 | 0.000E+00 | 0.000E+00 | 0.000E+00 | 1.680E+04 | 0.000E+00 | 5.350E+01 |
| NP-239 | 3.080E-02 | 2.210E-03 | 0.000E+00 | 6.390E-03 | 0.000E+00 | 1.630E+02 | 0.000E+00 | 1.550E-03 |

# APPENDIX E

## $A_i$ Child Dose Factors for use in the Liquid Dose Calculations

| Agegroup: | CHILD | Pathway: | Shoreline Sediment (SHDp) | | | Units: | mrem/hr / µCi/ml | |
|---|---|---|---|---|---|---|---|---|
| **Nuclide** | **Bone** | **Liver** | **Thyroid** | **Kidney** | **Lung** | **Gilli** | **Skin** | **Total Body** |
| H-3 | 0.000E+00 | 0.000E+00 | 0.000E+00 | 0.000E+00 | 0.000E+00 | 0.000E+00 | 0.000E+00 | 0.000E+00 |
| C-14 | 0.000E+00 | 0.000E+00 | 0.000E+00 | 0.000E+00 | 0.000E+00 | 0.000E+00 | 0.000E+00 | 0.000E+00 |
| NA-24 | 4.990E-01 | 4.990E-01 | 4.990E-01 | 4.990E-01 | 4.990E-01 | 4.990E-01 | 5.780E-01 | 4.990E-01 |
| P-32 | 0.000E+00 | 0.000E+00 | 0.000E+00 | 0.000E+00 | 0.000E+00 | 0.000E+00 | 0.000E+00 | 0.000E+00 |
| CR-51 | 1.950E-01 | 1.950E-01 | 1.950E-01 | 1.950E-01 | 1.950E-01 | 1.950E-01 | 2.300E-01 | 1.950E-01 |
| MN-54 | 5.790E+01 | 5.790E+01 | 5.790E+01 | 5.790E+01 | 5.790E+01 | 5.790E+01 | 6.790E+01 | 5.790E+01 |
| MN-56 | 3.770E-02 | 3.770E-02 | 3.770E-02 | 3.770E-02 | 3.770E-02 | 3.770E-02 | 4.450E-02 | 3.770E-02 |
| FE-55 | 0.000E+00 | 0.000E+00 | 0.000E+00 | 0.000E+00 | 0.000E+00 | 0.000E+00 | 0.000E+00 | 0.000E+00 |
| FE-59 | 1.140E+01 | 1.140E+01 | 1.140E+01 | 1.140E+01 | 1.140E+01 | 1.140E+01 | 1.340E+01 | 1.140E+01 |
| CO-58 | 1.580E+01 | 1.580E+01 | 1.580E+01 | 1.580E+01 | 1.580E+01 | 1.580E+01 | 1.850E+01 | 1.580E+01 |
| CO-60 | 8.980E+02 | 8.980E+02 | 8.980E+02 | 8.980E+02 | 8.980E+02 | 8.980E+02 | 1.060E+03 | 8.980E+02 |
| NI-63 | 0.000E+00 | 0.000E+00 | 0.000E+00 | 0.000E+00 | 0.000E+00 | 0.000E+00 | 0.000E+00 | 0.000E+00 |
| NI-65 | 1.240E-02 | 1.240E-02 | 1.240E-02 | 1.240E-02 | 1.240E-02 | 1.240E-02 | 1.440E-02 | 1.240E-02 |
| CU-64 | 2.530E-02 | 2.530E-02 | 2.530E-02 | 2.530E-02 | 2.530E-02 | 2.530E-02 | 2.870E-02 | 2.530E-02 |
| ZN-65 | 3.120E+01 | 3.120E+01 | 3.120E+01 | 3.120E+01 | 3.120E+01 | 3.120E+01 | 3.590E+01 | 3.120E+01 |
| ZN-69 | 0.000E+00 | 0.000E+00 | 0.000E+00 | 0.000E+00 | 0.000E+00 | 0.000E+00 | 0.000E+00 | 0.000E+00 |
| BR-83 | 2.030E-04 | 2.030E-04 | 2.030E-04 | 2.030E-04 | 2.030E-04 | 2.030E-04 | 2.960E-04 | 2.030E-04 |
| BR-84 | 8.460E-03 | 8.460E-03 | 8.460E-03 | 8.460E-03 | 8.460E-03 | 8.460E-03 | 9.870E-03 | 8.460E-03 |
| BR-85 | 0.000E+00 | 0.000E+00 | 0.000E+00 | 0.000E+00 | 0.000E+00 | 0.000E+00 | 0.000E+00 | 0.000E+00 |
| RB-86 | 3.750E-01 | 3.750E-01 | 3.750E-01 | 3.750E-01 | 3.750E-01 | 3.750E-01 | 4.290E-01 | 3.750E-01 |
| RB-88 | 1.380E-03 | 1.380E-03 | 1.380E-03 | 1.380E-03 | 1.380E-03 | 1.380E-03 | 1.580E-03 | 1.380E-03 |
| RB-89 | 5.130E-03 | 5.130E-03 | 5.130E-03 | 5.130E-03 | 5.130E-03 | 5.130E-03 | 6.160E-03 | 5.130E-03 |
| SR-89 | 9.030E-04 | 9.030E-04 | 9.030E-04 | 9.030E-04 | 9.030E-04 | 9.030E-04 | 1.050E-03 | 9.030E-04 |
| SR-90 | 0.000E+00 | 0.000E+00 | 0.000E+00 | 0.000E+00 | 0.000E+00 | 0.000E+00 | 0.000E+00 | 0.000E+00 |
| SR-91 | 8.970E-02 | 8.970E-02 | 8.970E-02 | 8.970E-02 | 8.970E-02 | 8.970E-02 | 1.050E-01 | 8.970E-02 |

# APPENDIX E

## $A_i$ Child Dose Factors for use in the Liquid Dose Calculations

| Agegroup: | CHILD | Pathway: | Shoreline Sediment (SHDp) | | | Units: | mrem/hr / µCi/ml | |
|---|---|---|---|---|---|---|---|---|
| **Nuclide** | **Bone** | **Liver** | **Thyroid** | **Kidney** | **Lung** | **Gilli** | **Skin** | **Total Body** |
| SR-92 | 3.240E-02 | 3.240E-02 | 3.240E-02 | 3.240E-02 | 3.240E-02 | 3.240E-02 | 3.600E-02 | 3.240E-02 |
| Y-90 | 1.880E-04 | 1.880E-04 | 1.880E-04 | 1.880E-04 | 1.880E-04 | 1.880E-04 | 2.220E-04 | 1.880E-04 |
| Y-91 | 4.480E-02 | 4.480E-02 | 4.480E-02 | 4.480E-02 | 4.480E-02 | 4.480E-02 | 5.040E-02 | 4.480E-02 |
| Y-91M | 4.190E-03 | 4.190E-03 | 4.190E-03 | 4.190E-03 | 4.190E-03 | 4.190E-03 | 4.850E-03 | 4.190E-03 |
| Y-92 | 7.530E-03 | 7.530E-03 | 7.530E-03 | 7.530E-03 | 7.530E-03 | 7.530E-03 | 8.940E-03 | 7.530E-03 |
| Y-93 | 7.660E-03 | 7.660E-03 | 7.660E-03 | 7.660E-03 | 7.660E-03 | 7.660E-03 | 1.050E-02 | 7.660E-03 |
| ZR-95 | 1.020E+01 | 1.020E+01 | 1.020E+01 | 1.020E+01 | 1.020E+01 | 1.020E+01 | 1.190E+01 | 1.020E+01 |
| ZR-97 | 1.240E-01 | 1.240E-01 | 1.240E-01 | 1.240E-01 | 1.240E-01 | 1.240E-01 | 1.440E-01 | 1.240E-01 |
| NB-95 | 5.710E+00 | 5.710E+00 | 5.710E+00 | 5.710E+00 | 5.710E+00 | 5.710E+00 | 6.710E+00 | 5.710E+00 |
| MO-99 | 1.670E-01 | 1.670E-01 | 1.670E-01 | 1.670E-01 | 1.670E-01 | 1.670E-01 | 1.930E-01 | 1.670E-01 |
| TC-99M | 7.680E-03 | 7.680E-03 | 7.680E-03 | 7.680E-03 | 7.680E-03 | 7.680E-03 | 8.810E-03 | 7.680E-03 |
| TC-101 | 8.500E-04 | 8.500E-04 | 8.500E-04 | 8.500E-04 | 8.500E-04 | 8.500E-04 | 9.440E-04 | 8.500E-04 |
| RU-103 | 4.520E+00 | 4.520E+00 | 4.520E+00 | 4.520E+00 | 4.520E+00 | 4.520E+00 | 5.270E+00 | 4.520E+00 |
| RU-105 | 2.660E-02 | 2.660E-02 | 2.660E-02 | 2.660E-02 | 2.660E-02 | 2.660E-02 | 3.010E-02 | 2.660E-02 |
| RU-106 | 1.760E+01 | 1.760E+01 | 1.760E+01 | 1.760E+01 | 1.760E+01 | 1.760E+01 | 2.110E+01 | 1.760E+01 |
| AG-110M | 1.440E+02 | 1.440E+02 | 1.440E+02 | 1.440E+02 | 1.440E+02 | 1.440E+02 | 1.670E+02 | 1.440E+02 |
| TE-125M | 6.480E-02 | 6.480E-02 | 6.480E-02 | 6.480E-02 | 6.480E-02 | 6.480E-02 | 8.880E-02 | 6.480E-02 |
| TE-127 | 1.240E-04 | 1.240E-04 | 1.240E-04 | 1.240E-04 | 1.240E-04 | 1.240E-04 | 1.370E-04 | 1.240E-04 |
| TE-127M | 3.830E-03 | 3.830E-03 | 3.830E-03 | 3.830E-03 | 3.830E-03 | 3.830E-03 | 4.520E-03 | 3.830E-03 |
| TE-129 | 1.100E-03 | 1.100E-03 | 1.100E-03 | 1.100E-03 | 1.100E-03 | 1.100E-03 | 1.300E-03 | 1.100E-03 |
| TE-129M | 8.260E-01 | 8.260E-01 | 8.260E-01 | 8.260E-01 | 8.260E-01 | 8.260E-01 | 9.650E-01 | 8.260E-01 |
| TE-131 | 1.220E-03 | 1.220E-03 | 1.220E-03 | 1.220E-03 | 1.220E-03 | 1.220E-03 | 1.440E+00 | 1.220E-03 |
| TE-131M | 3.350E-01 | 3.350E-01 | 3.350E-01 | 3.350E-01 | 3.350E-01 | 3.350E-01 | 3.950E-01 | 3.350E-01 |
| TE-132 | 1.770E-01 | 1.770E-01 | 1.770E-01 | 1.770E-01 | 1.770E-01 | 1.770E-01 | 2.080E-01 | 1.770E-01 |
| I-130 | 2.300E-01 | 2.300E-01 | 2.300E-01 | 2.300E-01 | 2.300E-01 | 2.300E-01 | 2.790E-01 | 2.300E-01 |

# APPENDIX E

## $A_i$ Child Dose Factors for use in the Liquid Dose Calculations

| Agegroup: | CHILD | Pathway: | Shoreline Sediment (SHDp) | | | Units: | mrem/hr / µCi/ml | |
|---|---|---|---|---|---|---|---|---|
| **Nuclide** | **Bone** | **Liver** | **Thyroid** | **Kidney** | **Lung** | **Gilli** | **Skin** | **Total Body** |
| I-131 | 7.180E-01 | 7.180E-01 | 7.180E-01 | 7.180E-01 | 7.180E-01 | 7.180E-01 | 8.720E-01 | 7.180E-01 |
| I-132 | 5.200E-02 | 5.200E-02 | 5.200E-02 | 5.200E-02 | 5.200E-02 | 5.200E-02 | 6.120E-02 | 5.200E-02 |
| I-133 | 1.020E-01 | 1.020E-01 | 1.020E-01 | 1.020E-01 | 1.020E-01 | 1.020E-01 | 1.240E-01 | 1.020E-01 |
| I-134 | 1.870E-02 | 1.870E-02 | 1.870E-02 | 1.870E-02 | 1.870E-02 | 1.870E-02 | 2.210E-02 | 1.870E-02 |
| I-135 | 1.050E-01 | 1.050E-01 | 1.050E-01 | 1.050E-01 | 1.050E-01 | 1.050E-01 | 1.230E-01 | 1.050E-01 |
| CS-134 | 2.860E+02 | 2.860E+02 | 2.860E+02 | 2.860E+02 | 2.860E+02 | 2.860E+02 | 3.340E+02 | 2.860E+02 |
| CS-136 | 6.300E+00 | 6.300E+00 | 6.300E+00 | 6.300E+00 | 6.300E+00 | 6.300E+00 | 7.140E+00 | 6.300E+00 |
| CS-137 | 4.290E+02 | 4.290E+02 | 4.290E+02 | 4.290E+02 | 4.290E+02 | 4.290E+02 | 5.010E+02 | 4.290E+02 |
| CS-138 | 1.500E-02 | 1.500E-02 | 1.500E-02 | 1.500E-02 | 1.500E-02 | 1.500E-02 | 1.710E-02 | 1.500E-02 |
| BA-139 | 4.420E-03 | 4.420E-03 | 4.420E-03 | 4.420E-03 | 4.420E-03 | 4.420E-03 | 4.970E-03 | 4.420E-03 |
| BA-140 | 8.570E-01 | 8.570E-01 | 8.570E-01 | 8.570E-01 | 8.570E-01 | 8.570E-01 | 9.800E-01 | 8.570E-01 |
| BA-141 | 1.740E-03 | 1.740E-03 | 1.740E-03 | 1.740E-03 | 1.740E-03 | 1.740E-03 | 1.980E-03 | 1.740E-03 |
| BA-142 | 1.870E-03 | 1.870E-03 | 1.870E-03 | 1.870E-03 | 1.870E-03 | 1.870E-03 | 2.130E-03 | 1.870E-03 |
| LA-140 | 8.020E-01 | 8.020E-01 | 8.020E-01 | 8.020E-01 | 8.020E-01 | 8.020E-01 | 9.090E-01 | 8.020E-01 |
| LA-142 | 3.170E-02 | 3.170E-02 | 3.170E-02 | 3.170E-02 | 3.170E-02 | 3.170E-02 | 3.810E-02 | 3.170E-02 |
| CE-141 | 5.700E-01 | 5.700E-01 | 5.700E-01 | 5.700E-01 | 5.700E-01 | 5.700E-01 | 6.430E-01 | 5.700E-01 |
| CE-143 | 9.650E-02 | 9.650E-02 | 9.650E-02 | 9.650E-02 | 9.650E-02 | 9.650E-02 | 1.100E-01 | 9.650E-02 |
| CE-144 | 2.900E+00 | 2.900E+00 | 2.900E+00 | 2.900E+00 | 2.900E+00 | 2.900E+00 | 3.360E+00 | 2.900E+00 |
| PR-143 | 0.000E+00 | 0.000E+00 | 0.000E+00 | 0.000E+00 | 0.000E+00 | 0.000E+00 | 0.000E+00 | 0.000E+00 |
| PR-144 | 7.660E-05 | 7.660E-05 | 7.660E-05 | 7.660E-05 | 7.660E-05 | 7.660E-05 | 8.810E-05 | 7.660E-05 |
| ND-147 | 3.500E-01 | 3.500E-01 | 3.500E-01 | 3.500E-01 | 3.500E-01 | 3.500E-01 | 4.200E-01 | 3.500E-01 |
| W-187 | 9.820E-02 | 9.820E-02 | 9.820E-02 | 9.820E-02 | 9.820E-02 | 9.820E-02 | 1.140E-01 | 9.820E-02 |
| NP-239 | 7.140E-02 | 7.140E-02 | 7.140E-02 | 7.140E-02 | 7.140E-02 | 7.140E-02 | 8.270E-02 | 7.140E-02 |

# APPENDIX F

## $A_i$ Infant Dose Factors for use in the Liquid Dose Calculations

| Agegroup: | INFANT | Pathway: | Potable Water (PWtr) | | | Units: | mrem/hr / µCi/ml | |
|---|---|---|---|---|---|---|---|---|
| **Nuclide** | **Bone** | **Liver** | **Thyroid** | **Kidney** | **Lung** | **Gilli** | **Skin** | **Total Body** |
| H-3 | 0.000E+00 | 1.160E+01 | 1.160E+01 | 1.160E+01 | 1.160E+01 | 1.160E+01 | 0.000E+00 | 1.160E+01 |
| C-14 | 8.920E+02 | 1.900E+02 | 1.900E+02 | 1.900E+02 | 1.900E+02 | 1.900E+02 | 0.000E+00 | 1.900E+02 |
| NA-24 | 2.190E+02 | 2.190E+02 | 2.190E+02 | 2.190E+02 | 2.190E+02 | 2.190E+02 | 0.000E+00 | 2.190E+02 |
| P-32 | 6.240E+04 | 3.670E+03 | 0.000E+00 | 0.000E+00 | 0.000E+00 | 8.450E+02 | 0.000E+00 | 2.420E+03 |
| CR-51 | 0.000E+00 | 0.000E+00 | 3.420E-01 | 7.470E-02 | 6.650E-01 | 1.530E+01 | 0.000E+00 | 5.240E-01 |
| MN-54 | 0.000E+00 | 7.480E+02 | 0.000E+00 | 1.660E+02 | 0.000E+00 | 2.750E+02 | 0.000E+00 | 1.690E+02 |
| MN-56 | 0.000E+00 | 1.220E+00 | 0.000E+00 | 1.050E+00 | 0.000E+00 | 1.110E+02 | 0.000E+00 | 2.100E-01 |
| FE-55 | 5.230E+02 | 3.380E+02 | 0.000E+00 | 0.000E+00 | 1.650E+02 | 4.290E+01 | 0.000E+00 | 9.030E+01 |
| FE-59 | 1.150E+03 | 2.010E+03 | 0.000E+00 | 0.000E+00 | 5.940E+02 | 9.590E+02 | 0.000E+00 | 7.910E+02 |
| CO-58 | 0.000E+00 | 1.350E+02 | 0.000E+00 | 0.000E+00 | 0.000E+00 | 3.360E+02 | 0.000E+00 | 3.360E+02 |
| CO-60 | 0.000E+00 | 4.060E+02 | 0.000E+00 | 0.000E+00 | 0.000E+00 | 9.670E+02 | 0.000E+00 | 9.590E+02 |
| NI-63 | 2.390E+04 | 1.470E+03 | 0.000E+00 | 0.000E+00 | 0.000E+00 | 7.340E+01 | 0.000E+00 | 8.280E+02 |
| NI-65 | 6.520E+00 | 7.380E-01 | 0.000E+00 | 0.000E+00 | 0.000E+00 | 5.620E+01 | 0.000E+00 | 3.360E-01 |
| CU-64 | 0.000E+00 | 1.190E+01 | 0.000E+00 | 2.010E+01 | 0.000E+00 | 2.440E+02 | 0.000E+00 | 5.500E+00 |
| ZN-65 | 6.910E+02 | 2.370E+03 | 0.000E+00 | 1.150E+03 | 0.000E+00 | 2.000E+03 | 0.000E+00 | 1.090E+03 |
| ZN-69 | 4.390E-04 | 7.910E-04 | 0.000E+00 | 3.290E-04 | 0.000E+00 | 6.450E-02 | 0.000E+00 | 5.890E-05 |
| BR-83 | 0.000E+00 | 0.000E+00 | 0.000E+00 | 0.000E+00 | 0.000E+00 | 0.000E+00 | 0.000E+00 | 4.200E-01 |
| BR-84 | 0.000E+00 | 0.000E+00 | 0.000E+00 | 0.000E+00 | 0.000E+00 | 0.000E+00 | 0.000E+00 | 2.220E-06 |
| BR-85 | 0.000E+00 | 0.000E+00 | 0.000E+00 | 0.000E+00 | 0.000E+00 | 0.000E+00 | 0.000E+00 | 1.800E-76 |
| RB-86 | 0.000E+00 | 6.280E+03 | 0.000E+00 | 0.000E+00 | 0.000E+00 | 1.610E+02 | 0.000E+00 | 3.100E+03 |
| RB-88 | 0.000E+00 | 1.250E-11 | 0.000E+00 | 0.000E+00 | 0.000E+00 | 1.220E-11 | 0.000E+00 | 6.840E-12 |
| RB-89 | 0.000E+00 | 9.960E-14 | 0.000E+00 | 0.000E+00 | 0.000E+00 | 3.390E-14 | 0.000E+00 | 6.860E-14 |
| SR-89 | 9.380E+04 | 0.000E+00 | 0.000E+00 | 0.000E+00 | 0.000E+00 | 1.930E+03 | 0.000E+00 | 2.690E+03 |
| SR-90 | 6.960E+05 | 0.000E+00 | 0.000E+00 | 0.000E+00 | 0.000E+00 | 8.690E+03 | 0.000E+00 | 1.770E+05 |
| SR-91 | 7.830E+02 | 0.000E+00 | 0.000E+00 | 0.000E+00 | 0.000E+00 | 9.270E+02 | 0.000E+00 | 2.830E+01 |

# APPENDIX F

## $A_i$ Infant Dose Factors for use in the Liquid Dose Calculations

| Agegroup: | INFANT | Pathway: | Potable Water (PWtr) | | | Units: | mrem/hr / µCi/ml | |
|---|---|---|---|---|---|---|---|---|
| **Nuclide** | **Bone** | **Liver** | **Thyroid** | **Kidney** | **Lung** | **Gilli** | **Skin** | **Total Body** |
| SR-92 | 3.350E+01 | 0.000E+00 | 0.000E+00 | 0.000E+00 | 0.000E+00 | 3.610E+02 | 0.000E+00 | 1.240E+00 |
| Y-90 | 2.870E+00 | 0.000E+00 | 0.000E+00 | 0.000E+00 | 0.000E+00 | 3.970E+03 | 0.000E+00 | 7.700E-02 |
| Y-91 | 4.230E+01 | 0.000E+00 | 0.000E+00 | 0.000E+00 | 0.000E+00 | 3.030E+03 | 0.000E+00 | 1.130E+00 |
| Y-91M | 1.350E-06 | 0.000E+00 | 0.000E+00 | 0.000E+00 | 0.000E+00 | 4.510E-03 | 0.000E+00 | 4.610E-08 |
| Y-92 | 2.740E-02 | 0.000E+00 | 0.000E+00 | 0.000E+00 | 0.000E+00 | 5.240E+02 | 0.000E+00 | 7.710E-04 |
| Y-93 | 4.010E-01 | 0.000E+00 | 0.000E+00 | 0.000E+00 | 0.000E+00 | 3.170E+03 | 0.000E+00 | 1.090E-02 |
| ZR-95 | 7.710E+00 | 1.880E+00 | 0.000E+00 | 2.020E+00 | 0.000E+00 | 9.350E+02 | 0.000E+00 | 1.330E+00 |
| ZR-97 | 3.400E-01 | 5.840E-02 | 0.000E+00 | 5.890E-02 | 0.000E+00 | 3.720E+03 | 0.000E+00 | 2.670E-02 |
| NB-95 | 1.560E+00 | 6.440E-01 | 0.000E+00 | 4.620E-01 | 0.000E+00 | 5.440E+02 | 0.000E+00 | 3.720E-01 |
| MO-99 | 0.000E+00 | 1.130E+03 | 0.000E+00 | 1.680E+03 | 0.000E+00 | 3.710E+02 | 0.000E+00 | 2.200E+02 |
| TC-99M | 1.810E-02 | 3.740E-02 | 0.000E+00 | 4.020E-01 | 1.950E-02 | 1.090E+01 | 0.000E+00 | 4.820E-01 |
| TC-101 | 4.570E-17 | 5.750E-17 | 0.000E+00 | 6.840E-16 | 3.140E-17 | 9.780E-15 | 0.000E+00 | 5.690E-16 |
| RU-103 | 5.520E+01 | 0.000E+00 | 0.000E+00 | 1.150E+02 | 0.000E+00 | 6.710E+02 | 0.000E+00 | 1.850E+01 |
| RU-105 | 7.850E-01 | 0.000E+00 | 0.000E+00 | 5.770E+00 | 0.000E+00 | 3.120E+02 | 0.000E+00 | 2.640E-01 |
| RU-106 | 9.060E+02 | 0.000E+00 | 0.000E+00 | 1.070E+03 | 0.000E+00 | 6.880E+03 | 0.000E+00 | 1.130E+02 |
| AG-110M | 3.740E+01 | 2.730E+01 | 0.000E+00 | 3.910E+01 | 0.000E+00 | 1.420E+03 | 0.000E+00 | 1.810E+01 |
| TE-125M | 8.710E+02 | 2.910E+02 | 2.930E+02 | 0.000E+00 | 0.000E+00 | 4.150E+02 | 0.000E+00 | 1.180E+02 |
| TE-127 | 1.550E+01 | 5.200E+00 | 1.260E+01 | 3.790E+01 | 0.000E+00 | 3.260E+02 | 0.000E+00 | 3.340E+00 |
| TE-127M | 2.190E+03 | 7.280E+02 | 6.340E+02 | 5.400E+03 | 0.000E+00 | 8.850E+02 | 0.000E+00 | 2.660E+02 |
| TE-129 | 7.860E-03 | 2.710E-03 | 6.590E-03 | 1.960E-02 | 0.000E+00 | 6.280E-01 | 0.000E+00 | 1.840E-03 |
| TE-129M | 3.720E+03 | 1.280E+03 | 1.430E+03 | 9.310E+03 | 0.000E+00 | 2.220E+03 | 0.000E+00 | 5.730E+02 |
| TE-131 | 1.420E-08 | 5.250E-09 | 1.270E-08 | 3.640E-08 | 0.000E+00 | 5.750E-07 | 0.000E+00 | 3.990E-09 |
| TE-131M | 4.330E+02 | 1.740E+02 | 3.540E+02 | 1.200E+03 | 0.000E+00 | 2.940E+03 | 0.000E+00 | 1.440E+02 |
| TE-132 | 7.030E+02 | 3.480E+02 | 5.140E+02 | 2.180E+03 | 0.000E+00 | 1.290E+03 | 0.000E+00 | 3.250E+02 |
| I-130 | 1.150E+02 | 2.530E+02 | 2.840E+04 | 2.780E+02 | 0.000E+00 | 5.430E+01 | 0.000E+00 | 1.020E+02 |

# APPENDIX F

## $A_i$ Infant Dose Factors for use in the Liquid Dose Calculations

| Agegroup: | INFANT | Pathway: | Potable Water (PWtr) | | | Units: | mrem/hr / µCi/ml | |
|---|---|---|---|---|---|---|---|---|
| **Nuclide** | **Bone** | **Liver** | **Thyroid** | **Kidney** | **Lung** | **Gilli** | **Skin** | **Total Body** |
| I-131 | 1.290E+03 | 1.520E+03 | 5.010E+05 | 1.780E+03 | 0.000E+00 | 5.440E+01 | 0.000E+00 | 6.700E+02 |
| I-132 | 1.680E+00 | 3.410E+00 | 1.600E+02 | 3.800E+00 | 0.000E+00 | 2.760E+00 | 0.000E+00 | 1.210E+00 |
| I-133 | 3.150E+02 | 4.590E+02 | 8.350E+04 | 5.400E+02 | 0.000E+00 | 7.770E+01 | 0.000E+00 | 1.340E+02 |
| I-134 | 2.440E-03 | 4.990E-03 | 1.160E-01 | 5.580E-03 | 0.000E+00 | 5.160E-03 | 0.000E+00 | 1.780E-03 |
| I-135 | 3.900E+01 | 7.750E+01 | 6.950E+03 | 8.640E+01 | 0.000E+00 | 2.800E+01 | 0.000E+00 | 2.830E+01 |
| CS-134 | 1.420E+04 | 2.640E+04 | 0.000E+00 | 6.810E+03 | 2.790E+03 | 7.180E+01 | 0.000E+00 | 2.670E+03 |
| CS-136 | 1.680E+03 | 4.950E+03 | 0.000E+00 | 1.970E+03 | 4.030E+02 | 7.510E+01 | 0.000E+00 | 1.850E+03 |
| CS-137 | 1.960E+04 | 2.300E+04 | 0.000E+00 | 6.170E+03 | 2.500E+03 | 7.190E+01 | 0.000E+00 | 1.630E+03 |
| CS-138 | 3.330E-06 | 5.410E-06 | 0.000E+00 | 2.700E-06 | 4.210E-07 | 8.650E-06 | 0.000E+00 | 2.620E-06 |
| BA-139 | 8.180E-02 | 5.420E-05 | 0.000E+00 | 3.260E-05 | 3.290E-05 | 5.180E+00 | 0.000E+00 | 2.370E-03 |
| BA-140 | 6.260E+03 | 6.260E+00 | 0.000E+00 | 1.490E+00 | 3.840E+00 | 1.540E+03 | 0.000E+00 | 3.230E+02 |
| BA-141 | 2.220E-11 | 1.520E-14 | 0.000E+00 | 9.140E-15 | 9.250E-15 | 2.710E-10 | 0.000E+00 | 7.000E-13 |
| BA-142 | 2.460E-20 | 2.040E-23 | 0.000E+00 | 1.180E-23 | 1.240E-23 | 1.010E-19 | 0.000E+00 | 1.210E-21 |
| LA-140 | 6.460E-01 | 2.550E-01 | 0.000E+00 | 0.000E+00 | 0.000E+00 | 2.990E+03 | 0.000E+00 | 6.550E-02 |
| LA-142 | 2.220E-04 | 8.160E-05 | 0.000E+00 | 0.000E+00 | 0.000E+00 | 1.390E+01 | 0.000E+00 | 1.950E-05 |
| CE-141 | 2.930E+00 | 1.790E+00 | 0.000E+00 | 5.510E-01 | 0.000E+00 | 9.230E+02 | 0.000E+00 | 2.100E-01 |
| CE-143 | 4.330E-01 | 2.870E+02 | 0.000E+00 | 8.360E-02 | 0.000E+00 | 1.670E+03 | 0.000E+00 | 3.270E-02 |
| CE-144 | 1.120E+02 | 4.580E+01 | 0.000E+00 | 1.850E+01 | 0.000E+00 | 6.430E+03 | 0.000E+00 | 6.270E+00 |
| PR-143 | 2.980E+00 | 1.110E+00 | 0.000E+00 | 4.140E-01 | 0.000E+00 | 1.570E+03 | 0.000E+00 | 1.480E-01 |
| PR-144 | 3.020E-15 | 1.170E-15 | 0.000E+00 | 4.240E-16 | 0.000E+00 | 5.440E-11 | 0.000E+00 | 1.520E-16 |
| ND-147 | 2.020E+00 | 2.070E+00 | 0.000E+00 | 7.980E-01 | 0.000E+00 | 1.310E+03 | 0.000E+00 | 1.270E-01 |
| W-187 | 2.400E+01 | 1.670E+01 | 0.000E+00 | 0.000E+00 | 0.000E+00 | 9.790E+02 | 0.000E+00 | 5.760E+00 |
| NP-239 | 3.600E-01 | 3.220E-02 | 0.000E+00 | 6.430E-02 | 0.000E+00 | 9.320E+02 | 0.000E+00 | 1.820E-02 |

# APPENDIX G

## $R_i$ Adult Dose Factors for use in the Gaseous Dose Calculations

| Agegroup: | ADULT | Pathway: | Grs/Cow/Milk (CMILK) | | | Units: | $m^2$·mrem/yr / µCi/sec; mrem/yr / µCi/$m^3$ (H-3, C-14) | |
|---|---|---|---|---|---|---|---|---|
| **Nuclide** | **Bone** | **Liver** | **Thyroid** | **Kidney** | **Lung** | **Gilli** | **Skin** | **Total Body** |
| H-3 | 0.000E+00 | 7.630E+02 | 7.630E+02 | 7.630E+02 | 7.630E+02 | 7.630E+02 | 0.000E+00 | 7.630E+02 |
| C-14 | 2.540E+04 | 5.080E+03 | 5.080E+03 | 5.080E+03 | 5.080E+03 | 5.080E+03 | 0.000E+00 | 5.080E+03 |
| NA-24 | 2.440E+06 | 2.440E+06 | 2.440E+06 | 2.440E+06 | 2.440E+06 | 2.440E+06 | 0.000E+00 | 2.440E+06 |
| P-32 | 1.710E+10 | 1.060E+09 | 0.000E+00 | 0.000E+00 | 0.000E+00 | 1.920E+09 | 0.000E+00 | 6.610E+08 |
| CR-51 | 0.000E+00 | 0.000E+00 | 1.710E+04 | 6.300E+03 | 3.790E+04 | 7.190E+06 | 0.000E+00 | 2.860E+04 |
| MN-54 | 0.000E+00 | 8.410E+06 | 0.000E+00 | 2.500E+06 | 0.000E+00 | 2.580E+07 | 0.000E+00 | 1.610E+06 |
| MN-56 | 0.000E+00 | 4.090E-03 | 0.000E+00 | 5.190E-03 | 0.000E+00 | 1.310E-01 | 0.000E+00 | 7.260E-04 |
| FE-55 | 2.510E+07 | 1.740E+07 | 0.000E+00 | 0.000E+00 | 9.680E+06 | 9.950E+06 | 0.000E+00 | 4.050E+06 |
| FE-59 | 2.970E+07 | 6.980E+07 | 0.000E+00 | 0.000E+00 | 1.950E+07 | 2.330E+08 | 0.000E+00 | 2.680E+07 |
| CO-58 | 0.000E+00 | 4.710E+06 | 0.000E+00 | 0.000E+00 | 0.000E+00 | 9.550E+07 | 0.000E+00 | 1.060E+07 |
| CO-60 | 0.000E+00 | 1.640E+07 | 0.000E+00 | 0.000E+00 | 0.000E+00 | 3.080E+08 | 0.000E+00 | 3.620E+07 |
| NI-63 | 6.730E+09 | 4.660E+08 | 0.000E+00 | 0.000E+00 | 0.000E+00 | 9.730E+07 | 0.000E+00 | 2.260E+08 |
| NI-65 | 3.700E-01 | 4.810E-02 | 0.000E+00 | 0.000E+00 | 0.000E+00 | 1.220E+00 | 0.000E+00 | 2.190E-02 |
| CU-64 | 0.000E+00 | 2.380E+04 | 0.000E+00 | 6.010E+04 | 0.000E+00 | 2.030E+06 | 0.000E+00 | 1.120E+04 |
| ZN-65 | 1.370E+09 | 4.370E+09 | 0.000E+00 | 2.920E+09 | 0.000E+00 | 2.750E+09 | 0.000E+00 | 1.970E+09 |
| ZN-69 | 2.090E-12 | 4.000E-12 | 0.000E+00 | 2.600E-12 | 0.000E+00 | 6.010E-13 | 0.000E+00 | 2.780E-13 |
| BR-83 | 0.000E+00 | 0.000E+00 | 0.000E+00 | 0.000E+00 | 0.000E+00 | 1.400E-01 | 0.000E+00 | 9.720E-02 |
| BR-84 | 0.000E+00 | 0.000E+00 | 0.000E+00 | 0.000E+00 | 0.000E+00 | 1.260E-28 | 0.000E+00 | 1.610E-23 |
| BR-85 | 0.000E+00 | 0.000E+00 | 0.000E+00 | 0.000E+00 | 0.000E+00 | 0.000E+00 | 0.000E+00 | 0.000E+00 |
| RB-86 | 0.000E+00 | 2.590E+09 | 0.000E+00 | 0.000E+00 | 0.000E+00 | 5.120E+08 | 0.000E+00 | 1.210E+09 |
| RB-88 | 0.000E+00 | 2.140E-45 | 0.000E+00 | 0.000E+00 | 0.000E+00 | 2.960E-56 | 0.000E+00 | 1.140E-45 |
| RB-89 | 0.000E+00 | 4.330E-53 | 0.000E+00 | 0.000E+00 | 0.000E+00 | 2.510E-66 | 0.000E+00 | 3.040E-53 |
| SR-89 | 1.450E+09 | 0.000E+00 | 0.000E+00 | 0.000E+00 | 0.000E+00 | 2.330E+08 | 0.000E+00 | 4.160E+07 |
| SR-90 | 4.680E+10 | 0.000E+00 | 0.000E+00 | 0.000E+00 | 0.000E+00 | 1.350E+09 | 0.000E+00 | 1.150E+10 |
| SR-91 | 2.890E+04 | 0.000E+00 | 0.000E+00 | 0.000E+00 | 0.000E+00 | 1.380E+05 | 0.000E+00 | 1.170E+03 |

# APPENDIX G

## $R_i$ Adult Dose Factors for use in the Gaseous Dose Calculations

| Agegroup: | ADULT | Pathway: | Grs/Cow/Milk (CMILK) | | | Units: | $m^2$·mrem/yr / µCi/sec; mrem/yr / µCi/$m^3$ (H-3, C-14) | |
|---|---|---|---|---|---|---|---|---|
| **Nuclide** | **Bone** | **Liver** | **Thyroid** | **Kidney** | **Lung** | **Gilli** | **Skin** | **Total Body** |
| SR-92 | 4.880E-01 | 0.000E+00 | 0.000E+00 | 0.000E+00 | 0.000E+00 | 9.680E+00 | 0.000E+00 | 2.110E-02 |
| Y-90 | 7.080E+01 | 0.000E+00 | 0.000E+00 | 0.000E+00 | 0.000E+00 | 7.510E+05 | 0.000E+00 | 1.900E+00 |
| Y-91 | 8.590E+03 | 0.000E+00 | 0.000E+00 | 0.000E+00 | 0.000E+00 | 4.730E+06 | 0.000E+00 | 2.300E+02 |
| Y-91M | 5.980E-20 | 0.000E+00 | 0.000E+00 | 0.000E+00 | 0.000E+00 | 1.760E-19 | 0.000E+00 | 2.320E-21 |
| Y-92 | 5.580E-05 | 0.000E+00 | 0.000E+00 | 0.000E+00 | 0.000E+00 | 9.770E-01 | 0.000E+00 | 1.630E-06 |
| Y-93 | 2.230E-01 | 0.000E+00 | 0.000E+00 | 0.000E+00 | 0.000E+00 | 7.090E+03 | 0.000E+00 | 6.170E-03 |
| ZR-95 | 9.430E+02 | 3.030E+02 | 0.000E+00 | 4.750E+02 | 0.000E+00 | 9.590E+05 | 0.000E+00 | 2.050E+02 |
| ZR-97 | 4.330E-01 | 8.740E-02 | 0.000E+00 | 1.320E-01 | 0.000E+00 | 2.710E+04 | 0.000E+00 | 4.000E-02 |
| NB-95 | 8.260E+04 | 4.590E+04 | 0.000E+00 | 4.540E+04 | 0.000E+00 | 2.790E+08 | 0.000E+00 | 2.470E+04 |
| MO-99 | 0.000E+00 | 2.480E+07 | 0.000E+00 | 5.610E+07 | 0.000E+00 | 5.740E+07 | 0.000E+00 | 4.710E+06 |
| TC-99M | 3.320E+00 | 9.380E+00 | 0.000E+00 | 1.420E+02 | 4.600E+00 | 5.550E+03 | 0.000E+00 | 1.200E+02 |
| TC-101 | 2.590E-60 | 3.740E-60 | 0.000E+00 | 6.730E-59 | 1.910E-60 | 1.120E-71 | 0.000E+00 | 3.670E-59 |
| RU-103 | 1.020E+03 | 0.000E+00 | 0.000E+00 | 3.890E+03 | 0.000E+00 | 1.190E+05 | 0.000E+00 | 4.390E+02 |
| RU-105 | 8.570E-04 | 0.000E+00 | 0.000E+00 | 1.110E-02 | 0.000E+00 | 5.240E-01 | 0.000E+00 | 3.380E-04 |
| RU-106 | 2.040E+04 | 0.000E+00 | 0.000E+00 | 3.940E+04 | 0.000E+00 | 1.320E+06 | 0.000E+00 | 2.580E+03 |
| AG-110M | 5.820E+07 | 5.390E+07 | 0.000E+00 | 1.060E+08 | 0.000E+00 | 2.200E+10 | 0.000E+00 | 3.200E+07 |
| TE-125M | 1.630E+07 | 5.900E+06 | 4.900E+06 | 6.630E+07 | 0.000E+00 | 6.500E+07 | 0.000E+00 | 2.180E+06 |
| TE-127 | 6.530E+02 | 2.340E+02 | 4.840E+02 | 2.660E+03 | 0.000E+00 | 5.150E+04 | 0.000E+00 | 1.410E+02 |
| TE-127M | 4.580E+07 | 1.640E+07 | 1.170E+07 | 1.860E+08 | 0.000E+00 | 1.540E+08 | 0.000E+00 | 5.580E+06 |
| TE-129 | 2.830E-10 | 1.060E-10 | 2.170E-10 | 1.190E-09 | 0.000E+00 | 2.130E-10 | 0.000E+00 | 6.880E-11 |
| TE-129M | 6.020E+07 | 2.250E+07 | 2.070E+07 | 2.510E+08 | 0.000E+00 | 3.030E+08 | 0.000E+00 | 9.530E+06 |
| TE-131 | 3.600E-33 | 1.500E-33 | 2.960E-33 | 1.580E-32 | 0.000E+00 | 5.100E-34 | 0.000E+00 | 1.140E-33 |
| TE-131M | 3.610E+05 | 1.770E+05 | 2.800E+05 | 1.790E+06 | 0.000E+00 | 1.750E+07 | 0.000E+00 | 1.470E+05 |
| TE-132 | 2.400E+06 | 1.550E+06 | 1.720E+06 | 1.500E+07 | 0.000E+00 | 7.350E+07 | 0.000E+00 | 1.460E+06 |
| I-130 | 4.200E+05 | 1.240E+06 | 1.050E+08 | 1.930E+06 | 0.000E+00 | 1.070E+06 | 0.000E+00 | 4.890E+05 |

# APPENDIX G

## $R_i$ Adult Dose Factors for use in the Gaseous Dose Calculations

| Agegroup: | ADULT | Pathway: | Grs/Cow/Milk (CMILK) | | | Units: | $m^2$·mrem/yr / µCi/sec; mrem/yr / µCi/$m^3$ (H-3, C-14) | |
|---|---|---|---|---|---|---|---|---|
| **Nuclide** | **Bone** | **Liver** | **Thyroid** | **Kidney** | **Lung** | **Gilli** | **Skin** | **Total Body** |
| I-131 | 2.960E+08 | 4.230E+08 | 1.390E+11 | 7.260E+08 | 0.000E+00 | 1.120E+08 | 0.000E+00 | 2.430E+08 |
| I-132 | 1.640E-01 | 4.390E-01 | 1.540E+01 | 7.000E-01 | 0.000E+00 | 8.250E-02 | 0.000E+00 | 1.540E-01 |
| I-133 | 3.870E+06 | 6.730E+06 | 9.890E+08 | 1.170E+07 | 0.000E+00 | 6.050E+06 | 0.000E+00 | 2.050E+06 |
| I-134 | 2.020E-12 | 5.480E-12 | 9.490E-11 | 8.710E-12 | 0.000E+00 | 4.770E-15 | 0.000E+00 | 1.960E-12 |
| I-135 | 1.280E+04 | 3.360E+04 | 2.220E+06 | 5.390E+04 | 0.000E+00 | 3.800E+04 | 0.000E+00 | 1.240E+04 |
| CS-134 | 5.650E+09 | 1.350E+10 | 0.000E+00 | 4.350E+09 | 1.450E+09 | 2.350E+08 | 0.000E+00 | 1.100E+10 |
| CS-136 | 2.630E+08 | 1.040E+09 | 0.000E+00 | 5.780E+08 | 7.930E+07 | 1.180E+08 | 0.000E+00 | 7.480E+08 |
| CS-137 | 7.380E+09 | 1.010E+10 | 0.000E+00 | 3.430E+09 | 1.140E+09 | 1.950E+08 | 0.000E+00 | 6.610E+09 |
| CS-138 | 9.050E-24 | 1.790E-23 | 0.000E+00 | 1.310E-23 | 1.300E-24 | 7.620E-29 | 0.000E+00 | 8.850E-24 |
| BA-139 | 4.420E-08 | 3.150E-11 | 0.000E+00 | 2.940E-11 | 1.790E-11 | 7.830E-08 | 0.000E+00 | 1.290E-09 |
| BA-140 | 2.690E+07 | 3.380E+04 | 0.000E+00 | 1.150E+04 | 1.930E+04 | 5.530E+07 | 0.000E+00 | 1.760E+06 |
| BA-141 | 4.090E-46 | 3.090E-49 | 0.000E+00 | 2.880E-49 | 1.760E-49 | 1.930E-55 | 0.000E+00 | 1.380E-47 |
| BA-142 | 2.640E-80 | 2.720E-83 | 0.000E+00 | 2.300E-83 | 1.540E-83 | 3.720E-98 | 0.000E+00 | 1.660E-81 |
| LA-140 | 4.510E+00 | 2.270E+00 | 0.000E+00 | 0.000E+00 | 0.000E+00 | 1.670E+05 | 0.000E+00 | 6.010E-01 |
| LA-142 | 1.860E-11 | 8.460E-12 | 0.000E+00 | 0.000E+00 | 0.000E+00 | 6.170E-08 | 0.000E+00 | 2.110E-12 |
| CE-141 | 4.840E+03 | 3.280E+03 | 0.000E+00 | 1.520E+03 | 0.000E+00 | 1.250E+07 | 0.000E+00 | 3.720E+02 |
| CE-143 | 4.160E+01 | 3.070E+04 | 0.000E+00 | 1.350E+01 | 0.000E+00 | 1.150E+06 | 0.000E+00 | 3.400E+00 |
| CE-144 | 3.580E+05 | 1.500E+05 | 0.000E+00 | 8.870E+04 | 0.000E+00 | 1.210E+08 | 0.000E+00 | 1.920E+04 |
| PR-143 | 1.580E+02 | 6.330E+01 | 0.000E+00 | 3.660E+01 | 0.000E+00 | 6.920E+05 | 0.000E+00 | 7.830E+00 |
| PR-144 | 5.870E-54 | 2.440E-54 | 0.000E+00 | 1.380E-54 | 0.000E+00 | 8.450E-61 | 0.000E+00 | 2.990E-55 |
| ND-147 | 9.420E+01 | 1.090E+02 | 0.000E+00 | 6.360E+01 | 0.000E+00 | 5.220E+05 | 0.000E+00 | 6.510E+00 |
| W-187 | 6.510E+03 | 5.450E+03 | 0.000E+00 | 0.000E+00 | 0.000E+00 | 1.780E+06 | 0.000E+00 | 1.900E+03 |
| NP-239 | 3.670E+00 | 3.610E-01 | 0.000E+00 | 1.130E+00 | 0.000E+00 | 7.410E+04 | 0.000E+00 | 1.990E-01 |

# APPENDIX G

## $R_i$ Adult Dose Factors for use in the Gaseous Dose Calculations

| Agegroup: | ADULT | Pathway: | Grs/Goat/Milk (GMILK) | | | Units: | $m^2$·mrem/yr / µCi/sec; mrem/yr / µCi/$m^3$ (H-3, C-14) | |
|---|---|---|---|---|---|---|---|---|
| **Nuclide** | **Bone** | **Liver** | **Thyroid** | **Kidney** | **Lung** | **Gilli** | **Skin** | **Total Body** |
| H-3 | 0.000E+00 | 1.560E+03 | 1.560E+03 | 1.560E+03 | 1.560E+03 | 1.560E+03 | 0.000E+00 | 1.560E+03 |
| C-14 | 2.540E+04 | 5.080E+03 | 5.080E+03 | 5.080E+03 | 5.080E+03 | 5.080E+03 | 0.000E+00 | 5.080E+03 |
| NA-24 | 2.930E+05 | 2.930E+05 | 2.930E+05 | 2.930E+05 | 2.930E+05 | 2.930E+05 | 0.000E+00 | 2.930E+05 |
| P-32 | 2.050E+10 | 1.280E+09 | 0.000E+00 | 0.000E+00 | 0.000E+00 | 2.310E+09 | 0.000E+00 | 7.930E+08 |
| CR-51 | 0.000E+00 | 0.000E+00 | 2.050E+03 | 7.550E+02 | 4.550E+03 | 8.620E+05 | 0.000E+00 | 3.430E+03 |
| MN-54 | 0.000E+00 | 1.010E+06 | 0.000E+00 | 3.000E+05 | 0.000E+00 | 3.090E+06 | 0.000E+00 | 1.930E+05 |
| MN-56 | 0.000E+00 | 4.910E-04 | 0.000E+00 | 6.230E-04 | 0.000E+00 | 1.570E-02 | 0.000E+00 | 8.710E-05 |
| FE-55 | 3.260E+05 | 2.260E+05 | 0.000E+00 | 0.000E+00 | 1.260E+05 | 1.290E+05 | 0.000E+00 | 5.260E+04 |
| FE-59 | 3.860E+05 | 9.070E+05 | 0.000E+00 | 0.000E+00 | 2.540E+05 | 3.020E+06 | 0.000E+00 | 3.480E+05 |
| CO-58 | 0.000E+00 | 5.660E+05 | 0.000E+00 | 0.000E+00 | 0.000E+00 | 1.150E+07 | 0.000E+00 | 1.270E+06 |
| CO-60 | 0.000E+00 | 1.970E+06 | 0.000E+00 | 0.000E+00 | 0.000E+00 | 3.700E+07 | 0.000E+00 | 4.340E+06 |
| NI-63 | 8.070E+08 | 5.600E+07 | 0.000E+00 | 0.000E+00 | 0.000E+00 | 1.170E+07 | 0.000E+00 | 2.710E+07 |
| NI-65 | 4.440E-02 | 5.770E-03 | 0.000E+00 | 0.000E+00 | 0.000E+00 | 1.460E-01 | 0.000E+00 | 2.630E-03 |
| CU-64 | 0.000E+00 | 2.660E+03 | 0.000E+00 | 6.700E+03 | 0.000E+00 | 2.260E+05 | 0.000E+00 | 1.250E+03 |
| ZN-65 | 1.650E+08 | 5.240E+08 | 0.000E+00 | 3.500E+08 | 0.000E+00 | 3.300E+08 | 0.000E+00 | 2.370E+08 |
| ZN-69 | 2.510E-13 | 4.800E-13 | 0.000E+00 | 3.120E-13 | 0.000E+00 | 7.210E-14 | 0.000E+00 | 3.340E-14 |
| BR-83 | 0.000E+00 | 0.000E+00 | 0.000E+00 | 0.000E+00 | 0.000E+00 | 1.680E-02 | 0.000E+00 | 1.170E-02 |
| BR-84 | 0.000E+00 | 0.000E+00 | 0.000E+00 | 0.000E+00 | 0.000E+00 | 1.520E-29 | 0.000E+00 | 1.930E-24 |
| BR-85 | 0.000E+00 | 0.000E+00 | 0.000E+00 | 0.000E+00 | 0.000E+00 | 0.000E+00 | 0.000E+00 | 0.000E+00 |
| RB-86 | 0.000E+00 | 3.110E+08 | 0.000E+00 | 0.000E+00 | 0.000E+00 | 6.140E+07 | 0.000E+00 | 1.450E+08 |
| RB-88 | 0.000E+00 | 2.570E-46 | 0.000E+00 | 0.000E+00 | 0.000E+00 | 3.550E-57 | 0.000E+00 | 1.360E-46 |
| RB-89 | 0.000E+00 | 5.190E-54 | 0.000E+00 | 0.000E+00 | 0.000E+00 | 3.020E-67 | 0.000E+00 | 3.650E-54 |
| SR-89 | 3.050E+09 | 0.000E+00 | 0.000E+00 | 0.000E+00 | 0.000E+00 | 4.890E+08 | 0.000E+00 | 8.750E+07 |
| SR-90 | 9.830E+10 | 0.000E+00 | 0.000E+00 | 0.000E+00 | 0.000E+00 | 2.840E+09 | 0.000E+00 | 2.410E+10 |
| SR-91 | 6.070E+04 | 0.000E+00 | 0.000E+00 | 0.000E+00 | 0.000E+00 | 2.890E+05 | 0.000E+00 | 2.450E+03 |

# APPENDIX G

## $R_i$ Adult Dose Factors for use in the Gaseous Dose Calculations

| Agegroup: | ADULT | Pathway: | Grs/Goat/Milk (GMILK) | | | Units: | $m^2$·mrem/yr / µCi/sec; mrem/yr / µCi/$m^3$ (H-3, C-14) | |
|---|---|---|---|---|---|---|---|---|
| **Nuclide** | **Bone** | **Liver** | **Thyroid** | **Kidney** | **Lung** | **Gilli** | **Skin** | **Total Body** |
| SR-92 | 1.030E+00 | 0.000E+00 | 0.000E+00 | 0.000E+00 | 0.000E+00 | 2.030E+01 | 0.000E+00 | 4.440E-02 |
| Y-90 | 8.500E+00 | 0.000E+00 | 0.000E+00 | 0.000E+00 | 0.000E+00 | 9.010E+04 | 0.000E+00 | 2.280E-01 |
| Y-91 | 1.030E+03 | 0.000E+00 | 0.000E+00 | 0.000E+00 | 0.000E+00 | 5.670E+05 | 0.000E+00 | 2.760E+01 |
| Y-91M | 7.170E-21 | 0.000E+00 | 0.000E+00 | 0.000E+00 | 0.000E+00 | 2.110E-20 | 0.000E+00 | 2.780E-22 |
| Y-92 | 6.690E-06 | 0.000E+00 | 0.000E+00 | 0.000E+00 | 0.000E+00 | 1.170E-01 | 0.000E+00 | 1.960E-07 |
| Y-93 | 2.680E-02 | 0.000E+00 | 0.000E+00 | 0.000E+00 | 0.000E+00 | 8.500E+02 | 0.000E+00 | 7.400E-04 |
| ZR-95 | 1.130E+02 | 3.630E+01 | 0.000E+00 | 5.700E+01 | 0.000E+00 | 1.150E+05 | 0.000E+00 | 2.460E+01 |
| ZR-97 | 5.200E-02 | 1.050E-02 | 0.000E+00 | 1.580E-02 | 0.000E+00 | 3.250E+03 | 0.000E+00 | 4.800E-03 |
| NB-95 | 9.910E+03 | 5.510E+03 | 0.000E+00 | 5.450E+03 | 0.000E+00 | 3.340E+07 | 0.000E+00 | 2.960E+03 |
| MO-99 | 0.000E+00 | 2.970E+06 | 0.000E+00 | 6.730E+06 | 0.000E+00 | 6.890E+06 | 0.000E+00 | 5.660E+05 |
| TC-99M | 3.980E-01 | 1.130E+00 | 0.000E+00 | 1.710E+01 | 5.520E-01 | 6.660E+02 | 0.000E+00 | 1.430E+01 |
| TC-101 | 3.110E-61 | 4.490E-61 | 0.000E+00 | 8.080E-60 | 2.290E-61 | 1.350E-72 | 0.000E+00 | 4.400E-60 |
| RU-103 | 1.220E+02 | 0.000E+00 | 0.000E+00 | 4.660E+02 | 0.000E+00 | 1.430E+04 | 0.000E+00 | 5.260E+01 |
| RU-105 | 1.030E-04 | 0.000E+00 | 0.000E+00 | 1.330E-03 | 0.000E+00 | 6.290E-02 | 0.000E+00 | 4.060E-05 |
| RU-106 | 2.450E+03 | 0.000E+00 | 0.000E+00 | 4.730E+03 | 0.000E+00 | 1.580E+05 | 0.000E+00 | 3.100E+02 |
| AG-110M | 6.990E+06 | 6.460E+06 | 0.000E+00 | 1.270E+07 | 0.000E+00 | 2.640E+09 | 0.000E+00 | 3.840E+06 |
| TE-125M | 1.950E+06 | 7.080E+05 | 5.880E+05 | 7.950E+06 | 0.000E+00 | 7.800E+06 | 0.000E+00 | 2.620E+05 |
| TE-127 | 7.830E+01 | 2.810E+01 | 5.800E+01 | 3.190E+02 | 0.000E+00 | 6.180E+03 | 0.000E+00 | 1.700E+01 |
| TE-127M | 5.490E+06 | 1.960E+06 | 1.400E+06 | 2.230E+07 | 0.000E+00 | 1.840E+07 | 0.000E+00 | 6.690E+05 |
| TE-129 | 3.390E-11 | 1.270E-11 | 2.600E-11 | 1.430E-10 | 0.000E+00 | 2.560E-11 | 0.000E+00 | 8.260E-12 |
| TE-129M | 7.220E+06 | 2.690E+06 | 2.480E+06 | 3.020E+07 | 0.000E+00 | 3.640E+07 | 0.000E+00 | 1.140E+06 |
| TE-131 | 4.320E-34 | 1.810E-34 | 3.550E-34 | 1.890E-33 | 0.000E+00 | 6.120E-35 | 0.000E+00 | 1.360E-34 |
| TE-131M | 4.330E+04 | 2.120E+04 | 3.360E+04 | 2.150E+05 | 0.000E+00 | 2.100E+06 | 0.000E+00 | 1.770E+04 |
| TE-132 | 2.880E+05 | 1.860E+05 | 2.060E+05 | 1.800E+06 | 0.000E+00 | 8.820E+06 | 0.000E+00 | 1.750E+05 |
| I-130 | 5.040E+05 | 1.490E+06 | 1.260E+08 | 2.320E+06 | 0.000E+00 | 1.280E+06 | 0.000E+00 | 5.870E+05 |

# APPENDIX G

## $R_i$ Adult Dose Factors for use in the Gaseous Dose Calculations

| Agegroup: | ADULT | Pathway: | Grs/Goat/Milk (GMILK) | | | Units: | $m^2$·mrem/yr / µCi/sec; mrem/yr / µCi/$m^3$ (H-3, C-14) | |
|---|---|---|---|---|---|---|---|---|
| **Nuclide** | **Bone** | **Liver** | **Thyroid** | **Kidney** | **Lung** | **Gilli** | **Skin** | **Total Body** |
| I-131 | 3.550E+08 | 5.080E+08 | 1.670E+11 | 8.710E+08 | 0.000E+00 | 1.340E+08 | 0.000E+00 | 2.910E+08 |
| I-132 | 1.970E-01 | 5.270E-01 | 1.840E+01 | 8.400E-01 | 0.000E+00 | 9.900E-02 | 0.000E+00 | 1.840E-01 |
| I-133 | 4.640E+06 | 8.080E+06 | 1.190E+09 | 1.410E+07 | 0.000E+00 | 7.260E+06 | 0.000E+00 | 2.460E+06 |
| I-134 | 2.420E-12 | 6.570E-12 | 1.140E-10 | 1.050E-11 | 0.000E+00 | 5.730E-15 | 0.000E+00 | 2.350E-12 |
| I-135 | 1.540E+04 | 4.030E+04 | 2.660E+06 | 6.470E+04 | 0.000E+00 | 4.560E+04 | 0.000E+00 | 1.490E+04 |
| CS-134 | 1.700E+10 | 4.040E+10 | 0.000E+00 | 1.310E+10 | 4.340E+09 | 7.060E+08 | 0.000E+00 | 3.300E+10 |
| CS-136 | 7.900E+08 | 3.120E+09 | 0.000E+00 | 1.730E+09 | 2.380E+08 | 3.540E+08 | 0.000E+00 | 2.240E+09 |
| CS-137 | 2.210E+10 | 3.030E+10 | 0.000E+00 | 1.030E+10 | 3.420E+09 | 5.860E+08 | 0.000E+00 | 1.980E+10 |
| CS-138 | 2.710E-23 | 5.360E-23 | 0.000E+00 | 3.940E-23 | 3.890E-24 | 2.290E-28 | 0.000E+00 | 2.650E-23 |
| BA-139 | 5.300E-09 | 3.780E-12 | 0.000E+00 | 3.530E-12 | 2.140E-12 | 9.400E-09 | 0.000E+00 | 1.550E-10 |
| BA-140 | 3.230E+06 | 4.050E+03 | 0.000E+00 | 1.380E+03 | 2.320E+03 | 6.640E+06 | 0.000E+00 | 2.110E+05 |
| BA-141 | 4.910E-47 | 3.710E-50 | 0.000E+00 | 3.450E-50 | 2.110E-50 | 2.310E-56 | 0.000E+00 | 1.660E-48 |
| BA-142 | 3.170E-81 | 3.260E-84 | 0.000E+00 | 2.750E-84 | 1.850E-84 | 0.000E+00 | 0.000E+00 | 2.000E-82 |
| LA-140 | 5.410E-01 | 2.730E-01 | 0.000E+00 | 0.000E+00 | 0.000E+00 | 2.000E+04 | 0.000E+00 | 7.210E-02 |
| LA-142 | 2.230E-12 | 1.010E-12 | 0.000E+00 | 0.000E+00 | 0.000E+00 | 7.410E-09 | 0.000E+00 | 2.530E-13 |
| CE-141 | 5.810E+02 | 3.930E+02 | 0.000E+00 | 1.830E+02 | 0.000E+00 | 1.500E+06 | 0.000E+00 | 4.460E+01 |
| CE-143 | 4.990E+00 | 3.690E+03 | 0.000E+00 | 1.620E+00 | 0.000E+00 | 1.380E+05 | 0.000E+00 | 4.080E-01 |
| CE-144 | 4.290E+04 | 1.790E+04 | 0.000E+00 | 1.060E+04 | 0.000E+00 | 1.450E+07 | 0.000E+00 | 2.300E+03 |
| PR-143 | 1.890E+01 | 7.600E+00 | 0.000E+00 | 4.390E+00 | 0.000E+00 | 8.300E+04 | 0.000E+00 | 9.390E-01 |
| PR-144 | 7.050E-55 | 2.930E-55 | 0.000E+00 | 1.650E-55 | 0.000E+00 | 1.010E-61 | 0.000E+00 | 3.580E-56 |
| ND-147 | 1.130E+01 | 1.310E+01 | 0.000E+00 | 7.630E+00 | 0.000E+00 | 6.270E+04 | 0.000E+00 | 7.810E-01 |
| W-187 | 7.820E+02 | 6.530E+02 | 0.000E+00 | 0.000E+00 | 0.000E+00 | 2.140E+05 | 0.000E+00 | 2.280E+02 |
| NP-239 | 4.410E-01 | 4.330E-02 | 0.000E+00 | 1.350E-01 | 0.000E+00 | 8.890E+03 | 0.000E+00 | 2.390E-02 |

# APPENDIX G

## $R_i$ Adult Dose Factors for use in the Gaseous Dose Calculations

| Agegroup: | ADULT | Pathway: | Grs/Cow/Meat (CMEAT) | | | Units: | $m^2$·mrem/yr / µCi/sec; mrem/yr / µCi/$m^3$ (H-3, C-14) | |
|---|---|---|---|---|---|---|---|---|
| **Nuclide** | **Bone** | **Liver** | **Thyroid** | **Kidney** | **Lung** | **Gilli** | **Skin** | **Total Body** |
| H-3 | 0.000E+00 | 3.250E+02 | 3.250E+02 | 3.250E+02 | 3.250E+02 | 3.250E+02 | 0.000E+00 | 3.250E+02 |
| C-14 | 2.330E+04 | 4.660E+03 | 4.660E+03 | 4.660E+03 | 4.660E+03 | 4.660E+03 | 0.000E+00 | 4.660E+03 |
| NA-24 | 1.360E-03 | 1.360E-03 | 1.360E-03 | 1.360E-03 | 1.360E-03 | 1.360E-03 | 0.000E+00 | 1.360E-03 |
| P-32 | 4.660E+09 | 2.900E+08 | 0.000E+00 | 0.000E+00 | 0.000E+00 | 5.240E+08 | 0.000E+00 | 1.800E+08 |
| CR-51 | 0.000E+00 | 0.000E+00 | 4.210E+03 | 1.550E+03 | 9.350E+03 | 1.770E+06 | 0.000E+00 | 7.050E+03 |
| MN-54 | 0.000E+00 | 9.180E+06 | 0.000E+00 | 2.730E+06 | 0.000E+00 | 2.810E+07 | 0.000E+00 | 1.750E+06 |
| MN-56 | 0.000E+00 | 1.320E-53 | 0.000E+00 | 1.680E-53 | 0.000E+00 | 4.220E-52 | 0.000E+00 | 2.350E-54 |
| FE-55 | 2.930E+08 | 2.030E+08 | 0.000E+00 | 0.000E+00 | 1.130E+08 | 1.160E+08 | 0.000E+00 | 4.720E+07 |
| FE-59 | 2.660E+08 | 6.240E+08 | 0.000E+00 | 0.000E+00 | 1.740E+08 | 2.080E+09 | 0.000E+00 | 2.390E+08 |
| CO-58 | 0.000E+00 | 1.820E+07 | 0.000E+00 | 0.000E+00 | 0.000E+00 | 3.690E+08 | 0.000E+00 | 4.090E+07 |
| CO-60 | 0.000E+00 | 7.520E+07 | 0.000E+00 | 0.000E+00 | 0.000E+00 | 1.410E+09 | 0.000E+00 | 1.660E+08 |
| NI-63 | 1.890E+10 | 1.310E+09 | 0.000E+00 | 0.000E+00 | 0.000E+00 | 2.730E+08 | 0.000E+00 | 6.330E+08 |
| NI-65 | 2.250E-52 | 2.920E-53 | 0.000E+00 | 0.000E+00 | 0.000E+00 | 7.400E-52 | 0.000E+00 | 1.330E-53 |
| CU-64 | 0.000E+00 | 2.710E-07 | 0.000E+00 | 6.830E-07 | 0.000E+00 | 2.310E-05 | 0.000E+00 | 1.270E-07 |
| ZN-65 | 3.560E+08 | 1.130E+09 | 0.000E+00 | 7.570E+08 | 0.000E+00 | 7.130E+08 | 0.000E+00 | 5.120E+08 |
| ZN-69 | 0.000E+00 | 0.000E+00 | 0.000E+00 | 0.000E+00 | 0.000E+00 | 0.000E+00 | 0.000E+00 | 0.000E+00 |
| BR-83 | 0.000E+00 | 0.000E+00 | 0.000E+00 | 0.000E+00 | 0.000E+00 | 8.650E-57 | 0.000E+00 | 6.000E-57 |
| BR-84 | 0.000E+00 | 0.000E+00 | 0.000E+00 | 0.000E+00 | 0.000E+00 | 0.000E+00 | 0.000E+00 | 0.000E+00 |
| BR-85 | 0.000E+00 | 0.000E+00 | 0.000E+00 | 0.000E+00 | 0.000E+00 | 0.000E+00 | 0.000E+00 | 0.000E+00 |
| RB-86 | 0.000E+00 | 4.870E+08 | 0.000E+00 | 0.000E+00 | 0.000E+00 | 9.600E+07 | 0.000E+00 | 2.270E+08 |
| RB-88 | 0.000E+00 | 0.000E+00 | 0.000E+00 | 0.000E+00 | 0.000E+00 | 0.000E+00 | 0.000E+00 | 0.000E+00 |
| RB-89 | 0.000E+00 | 0.000E+00 | 0.000E+00 | 0.000E+00 | 0.000E+00 | 0.000E+00 | 0.000E+00 | 0.000E+00 |
| SR-89 | 3.020E+08 | 0.000E+00 | 0.000E+00 | 0.000E+00 | 0.000E+00 | 4.840E+07 | 0.000E+00 | 8.660E+06 |
| SR-90 | 1.240E+10 | 0.000E+00 | 0.000E+00 | 0.000E+00 | 0.000E+00 | 3.590E+08 | 0.000E+00 | 3.050E+09 |
| SR-91 | 1.520E-10 | 0.000E+00 | 0.000E+00 | 0.000E+00 | 0.000E+00 | 7.240E-10 | 0.000E+00 | 6.140E-12 |

# APPENDIX G

## $R_i$ Adult Dose Factors for use in the Gaseous Dose Calculations

| Agegroup: | ADULT | Pathway: | Grs/Cow/Meat (CMEAT) | | | Units: | $m^2$·mrem/yr / µCi/sec; mrem/yr / µCi/$m^3$ (H-3, C-14) | |
|---|---|---|---|---|---|---|---|---|
| **Nuclide** | **Bone** | **Liver** | **Thyroid** | **Kidney** | **Lung** | **Gilli** | **Skin** | **Total Body** |
| SR-92 | 1.180E-49 | 0.000E+00 | 0.000E+00 | 0.000E+00 | 0.000E+00 | 2.340E-48 | 0.000E+00 | 5.100E-51 |
| Y-90 | 1.080E+02 | 0.000E+00 | 0.000E+00 | 0.000E+00 | 0.000E+00 | 1.140E+06 | 0.000E+00 | 2.890E+00 |
| Y-91 | 1.130E+06 | 0.000E+00 | 0.000E+00 | 0.000E+00 | 0.000E+00 | 6.230E+08 | 0.000E+00 | 3.030E+04 |
| Y-91M | 0.000E+00 | 0.000E+00 | 0.000E+00 | 0.000E+00 | 0.000E+00 | 0.000E+00 | 0.000E+00 | 0.000E+00 |
| Y-92 | 1.520E-39 | 0.000E+00 | 0.000E+00 | 0.000E+00 | 0.000E+00 | 2.660E-35 | 0.000E+00 | 4.430E-41 |
| Y-93 | 4.690E-12 | 0.000E+00 | 0.000E+00 | 0.000E+00 | 0.000E+00 | 1.490E-07 | 0.000E+00 | 1.300E-13 |
| ZR-95 | 1.870E+06 | 6.010E+05 | 0.000E+00 | 9.420E+05 | 0.000E+00 | 1.900E+09 | 0.000E+00 | 4.070E+05 |
| ZR-97 | 2.070E-05 | 4.170E-06 | 0.000E+00 | 6.300E-06 | 0.000E+00 | 1.290E+00 | 0.000E+00 | 1.910E-06 |
| NB-95 | 2.300E+06 | 1.280E+06 | 0.000E+00 | 1.260E+06 | 0.000E+00 | 7.760E+09 | 0.000E+00 | 6.870E+05 |
| MO-99 | 0.000E+00 | 1.000E+05 | 0.000E+00 | 2.260E+05 | 0.000E+00 | 2.320E+05 | 0.000E+00 | 1.900E+04 |
| TC-99M | 4.450E-21 | 1.260E-20 | 0.000E+00 | 1.910E-19 | 6.150E-21 | 7.430E-18 | 0.000E+00 | 1.600E-19 |
| TC-101 | 0.000E+00 | 0.000E+00 | 0.000E+00 | 0.000E+00 | 0.000E+00 | 0.000E+00 | 0.000E+00 | 0.000E+00 |
| RU-103 | 1.050E+08 | 0.000E+00 | 0.000E+00 | 4.010E+08 | 0.000E+00 | 1.230E+10 | 0.000E+00 | 4.530E+07 |
| RU-105 | 5.780E-28 | 0.000E+00 | 0.000E+00 | 7.460E-27 | 0.000E+00 | 3.530E-25 | 0.000E+00 | 2.280E-28 |
| RU-106 | 2.800E+09 | 0.000E+00 | 0.000E+00 | 5.400E+09 | 0.000E+00 | 1.810E+11 | 0.000E+00 | 3.540E+08 |
| AG-110M | 6.680E+06 | 6.180E+06 | 0.000E+00 | 1.220E+07 | 0.000E+00 | 2.520E+09 | 0.000E+00 | 3.670E+06 |
| TE-125M | 3.590E+08 | 1.300E+08 | 1.080E+08 | 1.460E+09 | 0.000E+00 | 1.430E+09 | 0.000E+00 | 4.810E+07 |
| TE-127 | 2.120E-10 | 7.610E-11 | 1.570E-10 | 8.640E-10 | 0.000E+00 | 1.670E-08 | 0.000E+00 | 4.590E-11 |
| TE-127M | 1.120E+09 | 3.990E+08 | 2.850E+08 | 4.530E+09 | 0.000E+00 | 3.740E+09 | 0.000E+00 | 1.360E+08 |
| TE-129 | 0.000E+00 | 0.000E+00 | 0.000E+00 | 0.000E+00 | 0.000E+00 | 0.000E+00 | 0.000E+00 | 0.000E+00 |
| TE-129M | 1.130E+09 | 4.230E+08 | 3.900E+08 | 4.730E+09 | 0.000E+00 | 5.710E+09 | 0.000E+00 | 1.790E+08 |
| TE-131 | 0.000E+00 | 0.000E+00 | 0.000E+00 | 0.000E+00 | 0.000E+00 | 0.000E+00 | 0.000E+00 | 0.000E+00 |
| TE-131M | 4.510E+02 | 2.210E+02 | 3.490E+02 | 2.230E+03 | 0.000E+00 | 2.190E+04 | 0.000E+00 | 1.840E+02 |
| TE-132 | 1.420E+06 | 9.180E+05 | 1.010E+06 | 8.840E+06 | 0.000E+00 | 4.340E+07 | 0.000E+00 | 8.620E+05 |
| I-130 | 2.110E-06 | 6.220E-06 | 5.270E-04 | 9.700E-06 | 0.000E+00 | 5.350E-06 | 0.000E+00 | 2.450E-06 |

# APPENDIX G

## $R_i$ Adult Dose Factors for use in the Gaseous Dose Calculations

| Agegroup: | ADULT | Pathway: | Grs/Cow/Meat (CMEAT) | | | Units: | $m^2$·mrem/yr / µCi/sec; mrem/yr / µCi/$m^3$ (H-3, C-14) | |
|---|---|---|---|---|---|---|---|---|
| **Nuclide** | **Bone** | **Liver** | **Thyroid** | **Kidney** | **Lung** | **Gilli** | **Skin** | **Total Body** |
| I-131 | 1.070E+07 | 1.540E+07 | 5.030E+09 | 2.630E+07 | 0.000E+00 | 4.050E+06 | 0.000E+00 | 8.800E+06 |
| I-132 | 6.970E-59 | 1.860E-58 | 6.530E-57 | 2.970E-58 | 0.000E+00 | 3.500E-59 | 0.000E+00 | 6.530E-59 |
| I-133 | 3.650E-01 | 6.350E-01 | 9.340E+01 | 1.110E+00 | 0.000E+00 | 5.710E-01 | 0.000E+00 | 1.940E-01 |
| I-134 | 0.000E+00 | 0.000E+00 | 0.000E+00 | 0.000E+00 | 0.000E+00 | 0.000E+00 | 0.000E+00 | 0.000E+00 |
| I-135 | 4.420E-17 | 1.160E-16 | 7.640E-15 | 1.860E-16 | 0.000E+00 | 1.310E-16 | 0.000E+00 | 4.270E-17 |
| CS-134 | 6.580E+08 | 1.560E+09 | 0.000E+00 | 5.060E+08 | 1.680E+08 | 2.740E+07 | 0.000E+00 | 1.280E+09 |
| CS-136 | 1.210E+07 | 4.760E+07 | 0.000E+00 | 2.650E+07 | 3.630E+06 | 5.410E+06 | 0.000E+00 | 3.420E+07 |
| CS-137 | 8.720E+08 | 1.190E+09 | 0.000E+00 | 4.050E+08 | 1.350E+08 | 2.310E+07 | 0.000E+00 | 7.810E+08 |
| CS-138 | 0.000E+00 | 0.000E+00 | 0.000E+00 | 0.000E+00 | 0.000E+00 | 0.000E+00 | 0.000E+00 | 0.000E+00 |
| BA-139 | 0.000E+00 | 0.000E+00 | 0.000E+00 | 0.000E+00 | 0.000E+00 | 0.000E+00 | 0.000E+00 | 0.000E+00 |
| BA-140 | 2.870E+07 | 3.610E+04 | 0.000E+00 | 1.230E+04 | 2.070E+04 | 5.920E+07 | 0.000E+00 | 1.880E+06 |
| BA-141 | 0.000E+00 | 0.000E+00 | 0.000E+00 | 0.000E+00 | 0.000E+00 | 0.000E+00 | 0.000E+00 | 0.000E+00 |
| BA-142 | 0.000E+00 | 0.000E+00 | 0.000E+00 | 0.000E+00 | 0.000E+00 | 0.000E+00 | 0.000E+00 | 0.000E+00 |
| LA-140 | 3.710E-02 | 1.870E-02 | 0.000E+00 | 0.000E+00 | 0.000E+00 | 1.370E+03 | 0.000E+00 | 4.940E-03 |
| LA-142 | 3.470E-92 | 1.580E-92 | 0.000E+00 | 0.000E+00 | 0.000E+00 | 1.150E-88 | 0.000E+00 | 3.940E-93 |
| CE-141 | 1.400E+04 | 9.500E+03 | 0.000E+00 | 4.410E+03 | 0.000E+00 | 3.630E+07 | 0.000E+00 | 1.080E+03 |
| CE-143 | 2.010E-02 | 1.480E+01 | 0.000E+00 | 6.530E-03 | 0.000E+00 | 5.550E+02 | 0.000E+00 | 1.640E-03 |
| CE-144 | 1.460E+06 | 6.090E+05 | 0.000E+00 | 3.610E+05 | 0.000E+00 | 4.930E+08 | 0.000E+00 | 7.830E+04 |
| PR-143 | 2.100E+04 | 8.410E+03 | 0.000E+00 | 4.850E+03 | 0.000E+00 | 9.180E+07 | 0.000E+00 | 1.040E+03 |
| PR-144 | 0.000E+00 | 0.000E+00 | 0.000E+00 | 0.000E+00 | 0.000E+00 | 0.000E+00 | 0.000E+00 | 0.000E+00 |
| ND-147 | 7.070E+03 | 8.170E+03 | 0.000E+00 | 4.780E+03 | 0.000E+00 | 3.920E+07 | 0.000E+00 | 4.890E+02 |
| W-187 | 2.070E-02 | 1.730E-02 | 0.000E+00 | 0.000E+00 | 0.000E+00 | 5.660E+00 | 0.000E+00 | 6.040E-03 |
| NP-239 | 2.590E-01 | 2.550E-02 | 0.000E+00 | 7.950E-02 | 0.000E+00 | 5.230E+03 | 0.000E+00 | 1.400E-02 |

# APPENDIX G

## $R_i$ Adult Dose Factors for use in the Gaseous Dose Calculations

| Agegroup: | ADULT | Pathway: | Vegetation (VEG) | | | Units: | $m^2$·mrem/yr / µCi/sec; mrem/yr / µCi/$m^3$ (H-3, C-14) | |
|---|---|---|---|---|---|---|---|---|
| **Nuclide** | **Bone** | **Liver** | **Thyroid** | **Kidney** | **Lung** | **Gilli** | **Skin** | **Total Body** |
| H-3 | 0.000E+00 | 2.260E+03 | 2.260E+03 | 2.260E+03 | 2.260E+03 | 2.260E+03 | 0.000E+00 | 2.260E+03 |
| C-14 | 6.280E+04 | 1.260E+04 | 1.260E+04 | 1.260E+04 | 1.260E+04 | 1.260E+04 | 0.000E+00 | 1.260E+04 |
| NA-24 | 2.690E+05 | 2.690E+05 | 2.690E+05 | 2.690E+05 | 2.690E+05 | 2.690E+05 | 0.000E+00 | 2.690E+05 |
| P-32 | 1.400E+09 | 8.730E+07 | 0.000E+00 | 0.000E+00 | 0.000E+00 | 1.580E+08 | 0.000E+00 | 5.430E+07 |
| CR-51 | 0.000E+00 | 0.000E+00 | 2.780E+04 | 1.020E+04 | 6.160E+04 | 1.170E+07 | 0.000E+00 | 4.640E+04 |
| MN-54 | 0.000E+00 | 3.130E+08 | 0.000E+00 | 9.310E+07 | 0.000E+00 | 9.590E+08 | 0.000E+00 | 5.970E+07 |
| MN-56 | 0.000E+00 | 1.580E+01 | 0.000E+00 | 2.000E+01 | 0.000E+00 | 5.040E+02 | 0.000E+00 | 2.800E+00 |
| FE-55 | 2.100E+08 | 1.450E+08 | 0.000E+00 | 0.000E+00 | 8.080E+07 | 8.310E+07 | 0.000E+00 | 3.380E+07 |
| FE-59 | 1.260E+08 | 2.960E+08 | 0.000E+00 | 0.000E+00 | 8.280E+07 | 9.880E+08 | 0.000E+00 | 1.140E+08 |
| CO-58 | 0.000E+00 | 3.070E+07 | 0.000E+00 | 0.000E+00 | 0.000E+00 | 6.230E+08 | 0.000E+00 | 6.890E+07 |
| CO-60 | 0.000E+00 | 1.670E+08 | 0.000E+00 | 0.000E+00 | 0.000E+00 | 3.140E+09 | 0.000E+00 | 3.690E+08 |
| NI-63 | 1.040E+10 | 7.210E+08 | 0.000E+00 | 0.000E+00 | 0.000E+00 | 1.500E+08 | 0.000E+00 | 3.490E+08 |
| NI-65 | 6.150E+01 | 7.990E+00 | 0.000E+00 | 0.000E+00 | 0.000E+00 | 2.030E+02 | 0.000E+00 | 3.640E+00 |
| CU-64 | 0.000E+00 | 9.200E+03 | 0.000E+00 | 2.320E+04 | 0.000E+00 | 7.840E+05 | 0.000E+00 | 4.320E+03 |
| ZN-65 | 3.170E+08 | 1.010E+09 | 0.000E+00 | 6.750E+08 | 0.000E+00 | 6.360E+08 | 0.000E+00 | 4.560E+08 |
| ZN-69 | 5.490E-06 | 1.050E-05 | 0.000E+00 | 6.830E-06 | 0.000E+00 | 1.580E-06 | 0.000E+00 | 7.310E-07 |
| BR-83 | 0.000E+00 | 0.000E+00 | 0.000E+00 | 0.000E+00 | 0.000E+00 | 4.470E+00 | 0.000E+00 | 3.110E+00 |
| BR-84 | 0.000E+00 | 0.000E+00 | 0.000E+00 | 0.000E+00 | 0.000E+00 | 1.940E-16 | 0.000E+00 | 2.480E-11 |
| BR-85 | 0.000E+00 | 0.000E+00 | 0.000E+00 | 0.000E+00 | 0.000E+00 | 0.000E+00 | 0.000E+00 | 0.000E+00 |
| RB-86 | 0.000E+00 | 2.190E+08 | 0.000E+00 | 0.000E+00 | 0.000E+00 | 4.330E+07 | 0.000E+00 | 1.020E+08 |
| RB-88 | 0.000E+00 | 3.430E-22 | 0.000E+00 | 0.000E+00 | 0.000E+00 | 4.740E-33 | 0.000E+00 | 1.820E-22 |
| RB-89 | 0.000E+00 | 3.890E-26 | 0.000E+00 | 0.000E+00 | 0.000E+00 | 2.260E-39 | 0.000E+00 | 2.730E-26 |
| SR-89 | 9.970E+09 | 0.000E+00 | 0.000E+00 | 0.000E+00 | 0.000E+00 | 1.600E+09 | 0.000E+00 | 2.860E+08 |
| SR-90 | 6.050E+11 | 0.000E+00 | 0.000E+00 | 0.000E+00 | 0.000E+00 | 1.750E+10 | 0.000E+00 | 1.480E+11 |
| SR-91 | 3.050E+05 | 0.000E+00 | 0.000E+00 | 0.000E+00 | 0.000E+00 | 1.450E+06 | 0.000E+00 | 1.230E+04 |

# APPENDIX G

## $R_i$ Adult Dose Factors for use in the Gaseous Dose Calculations

| Agegroup: | ADULT | Pathway: | Vegetation (VEG) | | | Units: | $m^2$·mrem/yr / µCi/sec; mrem/yr / µCi/$m^3$ (H-3, C-14) | |
|---|---|---|---|---|---|---|---|---|
| **Nuclide** | **Bone** | **Liver** | **Thyroid** | **Kidney** | **Lung** | **Gilli** | **Skin** | **Total Body** |
| SR-92 | 4.270E+02 | 0.000E+00 | 0.000E+00 | 0.000E+00 | 0.000E+00 | 8.450E+03 | 0.000E+00 | 1.850E+01 |
| Y-90 | 1.330E+04 | 0.000E+00 | 0.000E+00 | 0.000E+00 | 0.000E+00 | 1.410E+08 | 0.000E+00 | 3.570E+02 |
| Y-91 | 5.110E+06 | 0.000E+00 | 0.000E+00 | 0.000E+00 | 0.000E+00 | 2.810E+09 | 0.000E+00 | 1.370E+05 |
| Y-91M | 5.220E-09 | 0.000E+00 | 0.000E+00 | 0.000E+00 | 0.000E+00 | 1.530E-08 | 0.000E+00 | 2.020E-10 |
| Y-92 | 9.150E-01 | 0.000E+00 | 0.000E+00 | 0.000E+00 | 0.000E+00 | 1.600E+04 | 0.000E+00 | 2.680E-02 |
| Y-93 | 1.700E+02 | 0.000E+00 | 0.000E+00 | 0.000E+00 | 0.000E+00 | 5.380E+06 | 0.000E+00 | 4.680E+00 |
| ZR-95 | 1.170E+06 | 3.770E+05 | 0.000E+00 | 5.910E+05 | 0.000E+00 | 1.190E+09 | 0.000E+00 | 2.550E+05 |
| ZR-97 | 3.370E+02 | 6.810E+01 | 0.000E+00 | 1.030E+02 | 0.000E+00 | 2.110E+07 | 0.000E+00 | 3.110E+01 |
| NB-95 | 1.420E+05 | 7.920E+04 | 0.000E+00 | 7.830E+04 | 0.000E+00 | 4.810E+08 | 0.000E+00 | 4.260E+04 |
| MO-99 | 0.000E+00 | 6.150E+06 | 0.000E+00 | 1.390E+07 | 0.000E+00 | 1.430E+07 | 0.000E+00 | 1.170E+06 |
| TC-99M | 3.100E+00 | 8.770E+00 | 0.000E+00 | 1.330E+02 | 4.300E+00 | 5.190E+03 | 0.000E+00 | 1.120E+02 |
| TC-101 | 8.220E-31 | 1.180E-30 | 0.000E+00 | 2.130E-29 | 6.050E-31 | 3.560E-42 | 0.000E+00 | 1.160E-29 |
| RU-103 | 4.770E+06 | 0.000E+00 | 0.000E+00 | 1.820E+07 | 0.000E+00 | 5.570E+08 | 0.000E+00 | 2.060E+06 |
| RU-105 | 5.390E+01 | 0.000E+00 | 0.000E+00 | 6.960E+02 | 0.000E+00 | 3.290E+04 | 0.000E+00 | 2.130E+01 |
| RU-106 | 1.930E+08 | 0.000E+00 | 0.000E+00 | 3.720E+08 | 0.000E+00 | 1.250E+10 | 0.000E+00 | 2.440E+07 |
| AG-110M | 1.050E+07 | 9.750E+06 | 0.000E+00 | 1.920E+07 | 0.000E+00 | 3.980E+09 | 0.000E+00 | 5.790E+06 |
| TE-125M | 9.660E+07 | 3.500E+07 | 2.900E+07 | 3.930E+08 | 0.000E+00 | 3.860E+08 | 0.000E+00 | 1.290E+07 |
| TE-127 | 5.660E+03 | 2.030E+03 | 4.190E+03 | 2.310E+04 | 0.000E+00 | 4.470E+05 | 0.000E+00 | 1.220E+03 |
| TE-127M | 3.490E+08 | 1.250E+08 | 8.920E+07 | 1.420E+09 | 0.000E+00 | 1.170E+09 | 0.000E+00 | 4.260E+07 |
| TE-129 | 7.630E-04 | 2.870E-04 | 5.850E-04 | 3.210E-03 | 0.000E+00 | 5.760E-04 | 0.000E+00 | 1.860E-04 |
| TE-129M | 2.510E+08 | 9.380E+07 | 8.630E+07 | 1.050E+09 | 0.000E+00 | 1.270E+09 | 0.000E+00 | 3.980E+07 |
| TE-131 | 1.500E-15 | 6.270E-16 | 1.230E-15 | 6.570E-15 | 0.000E+00 | 2.130E-16 | 0.000E+00 | 4.740E-16 |
| TE-131M | 9.120E+05 | 4.460E+05 | 7.060E+05 | 4.520E+06 | 0.000E+00 | 4.430E+07 | 0.000E+00 | 3.720E+05 |
| TE-132 | 4.300E+06 | 2.780E+06 | 3.070E+06 | 2.680E+07 | 0.000E+00 | 1.320E+08 | 0.000E+00 | 2.610E+06 |
| I-130 | 3.920E+05 | 1.160E+06 | 9.810E+07 | 1.810E+06 | 0.000E+00 | 9.960E+05 | 0.000E+00 | 4.570E+05 |

# APPENDIX G

## $R_i$ Adult Dose Factors for use in the Gaseous Dose Calculations

| Agegroup: | ADULT | Pathway: | Vegetation (VEG) | | | Units: | $m^2$·mrem/yr / µCi/sec; mrem/yr / µCi/$m^3$ (H-3, C-14) | |
|---|---|---|---|---|---|---|---|---|
| **Nuclide** | **Bone** | **Liver** | **Thyroid** | **Kidney** | **Lung** | **Gilli** | **Skin** | **Total Body** |
| I-131 | 8.080E+07 | 1.160E+08 | 3.790E+10 | 1.980E+08 | 0.000E+00 | 3.050E+07 | 0.000E+00 | 6.620E+07 |
| I-132 | 5.760E+01 | 1.540E+02 | 5.390E+03 | 2.450E+02 | 0.000E+00 | 2.890E+01 | 0.000E+00 | 5.390E+01 |
| I-133 | 2.090E+06 | 3.630E+06 | 5.330E+08 | 6.330E+06 | 0.000E+00 | 3.260E+06 | 0.000E+00 | 1.110E+06 |
| I-134 | 9.650E-05 | 2.620E-04 | 4.540E-03 | 4.170E-04 | 0.000E+00 | 2.290E-07 | 0.000E+00 | 9.380E-05 |
| I-135 | 3.900E+04 | 1.020E+05 | 6.730E+06 | 1.640E+05 | 0.000E+00 | 1.150E+05 | 0.000E+00 | 3.770E+04 |
| CS-134 | 4.670E+09 | 1.110E+10 | 0.000E+00 | 3.590E+09 | 1.190E+09 | 1.940E+08 | 0.000E+00 | 9.080E+09 |
| CS-136 | 4.270E+07 | 1.680E+08 | 0.000E+00 | 9.380E+07 | 1.290E+07 | 1.910E+07 | 0.000E+00 | 1.210E+08 |
| CS-137 | 6.360E+09 | 8.700E+09 | 0.000E+00 | 2.950E+09 | 9.810E+08 | 1.680E+08 | 0.000E+00 | 5.700E+09 |
| CS-138 | 3.920E-11 | 7.730E-11 | 0.000E+00 | 5.680E-11 | 5.610E-12 | 3.300E-16 | 0.000E+00 | 3.830E-11 |
| BA-139 | 2.860E-02 | 2.030E-05 | 0.000E+00 | 1.900E-05 | 1.150E-05 | 5.060E-02 | 0.000E+00 | 8.360E-04 |
| BA-140 | 1.280E+08 | 1.610E+05 | 0.000E+00 | 5.490E+04 | 9.240E+04 | 2.650E+08 | 0.000E+00 | 8.420E+06 |
| BA-141 | 1.150E-21 | 8.700E-25 | 0.000E+00 | 8.090E-25 | 4.940E-25 | 5.430E-31 | 0.000E+00 | 3.890E-23 |
| BA-142 | 5.960E-39 | 6.120E-42 | 0.000E+00 | 5.170E-42 | 3.470E-42 | 8.390E-57 | 0.000E+00 | 3.750E-40 |
| LA-140 | 1.980E+03 | 9.970E+02 | 0.000E+00 | 0.000E+00 | 0.000E+00 | 7.320E+07 | 0.000E+00 | 2.630E+02 |
| LA-142 | 2.020E-04 | 9.190E-05 | 0.000E+00 | 0.000E+00 | 0.000E+00 | 6.710E-01 | 0.000E+00 | 2.290E-05 |
| CE-141 | 1.970E+05 | 1.330E+05 | 0.000E+00 | 6.190E+04 | 0.000E+00 | 5.100E+08 | 0.000E+00 | 1.510E+04 |
| CE-143 | 9.980E+02 | 7.380E+05 | 0.000E+00 | 3.250E+02 | 0.000E+00 | 2.760E+07 | 0.000E+00 | 8.160E+01 |
| CE-144 | 3.290E+07 | 1.380E+07 | 0.000E+00 | 8.160E+06 | 0.000E+00 | 1.110E+10 | 0.000E+00 | 1.770E+06 |
| PR-143 | 6.260E+04 | 2.510E+04 | 0.000E+00 | 1.450E+04 | 0.000E+00 | 2.740E+08 | 0.000E+00 | 3.100E+03 |
| PR-144 | 3.090E-26 | 1.280E-26 | 0.000E+00 | 7.230E-27 | 0.000E+00 | 4.440E-33 | 0.000E+00 | 1.570E-27 |
| ND-147 | 3.330E+04 | 3.850E+04 | 0.000E+00 | 2.250E+04 | 0.000E+00 | 1.850E+08 | 0.000E+00 | 2.310E+03 |
| W-187 | 3.800E+04 | 3.180E+04 | 0.000E+00 | 0.000E+00 | 0.000E+00 | 1.040E+07 | 0.000E+00 | 1.110E+04 |
| NP-239 | 1.430E+03 | 1.400E+02 | 0.000E+00 | 4.380E+02 | 0.000E+00 | 2.880E+07 | 0.000E+00 | 7.740E+01 |

# APPENDIX G

## $R_i$ Adult Dose Factors for use in the Gaseous Dose Calculations

| Agegroup: | ADULT | Pathway: | Inhalation (INHL) | | | Units: | mrem/yr / µCi/m$^3$ | |
|---|---|---|---|---|---|---|---|---|
| **Nuclide** | **Bone** | **Liver** | **Thyroid** | **Kidney** | **Lung** | **Gilli** | **Skin** | **Total Body** |
| H-3 | 0.000E+00 | 1.260E+03 | 1.260E+03 | 1.260E+03 | 1.260E+03 | 1.260E+03 | 0.000E+00 | 1.260E+03 |
| C-14 | 1.820E+04 | 3.410E+03 | 3.410E+03 | 3.410E+03 | 3.410E+03 | 3.410E+03 | 0.000E+00 | 3.410E+03 |
| NA-24 | 1.020E+04 | 1.020E+04 | 1.020E+04 | 1.020E+04 | 1.020E+04 | 1.020E+04 | 0.000E+00 | 1.020E+04 |
| P-32 | 1.320E+06 | 7.710E+04 | 0.000E+00 | 0.000E+00 | 0.000E+00 | 8.640E+04 | 0.000E+00 | 5.010E+04 |
| CR-51 | 0.000E+00 | 0.000E+00 | 5.950E+01 | 2.280E+01 | 1.440E+04 | 3.320E+03 | 0.000E+00 | 1.000E+02 |
| MN-54 | 0.000E+00 | 3.960E+04 | 0.000E+00 | 9.840E+03 | 1.400E+06 | 7.740E+04 | 0.000E+00 | 6.300E+03 |
| MN-56 | 0.000E+00 | 1.240E+00 | 0.000E+00 | 1.300E+00 | 9.440E+03 | 2.020E+04 | 0.000E+00 | 1.830E-01 |
| FE-55 | 2.460E+04 | 1.700E+04 | 0.000E+00 | 0.000E+00 | 7.210E+04 | 6.030E+03 | 0.000E+00 | 3.940E+03 |
| FE-59 | 1.180E+04 | 2.780E+04 | 0.000E+00 | 0.000E+00 | 1.020E+06 | 1.880E+05 | 0.000E+00 | 1.060E+04 |
| CO-58 | 0.000E+00 | 1.580E+03 | 0.000E+00 | 0.000E+00 | 9.280E+05 | 1.060E+05 | 0.000E+00 | 2.070E+03 |
| CO-60 | 0.000E+00 | 1.150E+04 | 0.000E+00 | 0.000E+00 | 5.970E+06 | 2.850E+05 | 0.000E+00 | 1.480E+04 |
| NI-63 | 4.320E+05 | 3.140E+04 | 0.000E+00 | 0.000E+00 | 1.780E+05 | 1.340E+04 | 0.000E+00 | 1.450E+04 |
| NI-65 | 1.540E+00 | 2.100E-01 | 0.000E+00 | 0.000E+00 | 5.600E+03 | 1.230E+04 | 0.000E+00 | 9.120E-02 |
| CU-64 | 0.000E+00 | 1.460E+00 | 0.000E+00 | 4.620E+00 | 6.780E+03 | 4.900E+04 | 0.000E+00 | 6.150E-01 |
| ZN-65 | 3.240E+04 | 1.030E+05 | 0.000E+00 | 6.900E+04 | 8.640E+05 | 5.340E+04 | 0.000E+00 | 4.660E+04 |
| ZN-69 | 3.380E-02 | 6.510E-02 | 0.000E+00 | 4.220E-02 | 9.200E+02 | 1.630E+01 | 0.000E+00 | 4.520E-03 |
| BR-83 | 0.000E+00 | 0.000E+00 | 0.000E+00 | 0.000E+00 | 0.000E+00 | 2.320E+02 | 0.000E+00 | 2.410E+02 |
| BR-84 | 0.000E+00 | 0.000E+00 | 0.000E+00 | 0.000E+00 | 0.000E+00 | 1.640E-03 | 0.000E+00 | 3.130E+02 |
| BR-85 | 0.000E+00 | 0.000E+00 | 0.000E+00 | 0.000E+00 | 0.000E+00 | 0.000E+00 | 0.000E+00 | 1.280E+01 |
| RB-86 | 0.000E+00 | 1.350E+05 | 0.000E+00 | 0.000E+00 | 0.000E+00 | 1.660E+04 | 0.000E+00 | 5.900E+04 |
| RB-88 | 0.000E+00 | 3.870E+02 | 0.000E+00 | 0.000E+00 | 0.000E+00 | 3.340E-09 | 0.000E+00 | 1.930E+02 |
| RB-89 | 0.000E+00 | 2.560E+02 | 0.000E+00 | 0.000E+00 | 0.000E+00 | 9.280E-12 | 0.000E+00 | 1.700E+02 |
| SR-89 | 3.040E+05 | 0.000E+00 | 0.000E+00 | 0.000E+00 | 1.400E+06 | 3.500E+05 | 0.000E+00 | 8.720E+03 |
| SR-90 | 9.920E+07 | 0.000E+00 | 0.000E+00 | 0.000E+00 | 9.600E+06 | 7.220E+05 | 0.000E+00 | 6.100E+06 |
| SR-91 | 6.190E+01 | 0.000E+00 | 0.000E+00 | 0.000E+00 | 3.650E+04 | 1.910E+05 | 0.000E+00 | 2.500E+00 |

# APPENDIX G

## $R_i$ Adult Dose Factors for use in the Gaseous Dose Calculations

| Agegroup: | ADULT | Pathway: | Inhalation (INHL) | | | Units: | mrem/yr / µCi/m$^3$ | |
|---|---|---|---|---|---|---|---|---|
| **Nuclide** | **Bone** | **Liver** | **Thyroid** | **Kidney** | **Lung** | **Gilli** | **Skin** | **Total Body** |
| SR-92 | 6.740E+00 | 0.000E+00 | 0.000E+00 | 0.000E+00 | 1.650E+04 | 4.300E+04 | 0.000E+00 | 2.910E-01 |
| Y-90 | 2.090E+03 | 0.000E+00 | 0.000E+00 | 0.000E+00 | 1.700E+05 | 5.060E+05 | 0.000E+00 | 5.610E+01 |
| Y-91 | 4.620E+05 | 0.000E+00 | 0.000E+00 | 0.000E+00 | 1.700E+06 | 3.850E+05 | 0.000E+00 | 1.240E+04 |
| Y-91M | 2.610E-01 | 0.000E+00 | 0.000E+00 | 0.000E+00 | 1.920E+03 | 1.330E+00 | 0.000E+00 | 1.020E-02 |
| Y-92 | 1.030E+01 | 0.000E+00 | 0.000E+00 | 0.000E+00 | 1.570E+04 | 7.350E+04 | 0.000E+00 | 3.020E-01 |
| Y-93 | 9.440E+01 | 0.000E+00 | 0.000E+00 | 0.000E+00 | 4.850E+04 | 4.220E+05 | 0.000E+00 | 2.610E+00 |
| ZR-95 | 1.070E+05 | 3.440E+04 | 0.000E+00 | 5.420E+04 | 1.770E+06 | 1.500E+05 | 0.000E+00 | 2.330E+04 |
| ZR-97 | 9.680E+01 | 1.960E+01 | 0.000E+00 | 2.970E+01 | 7.870E+04 | 5.230E+05 | 0.000E+00 | 9.040E+00 |
| NB-95 | 1.410E+04 | 7.820E+03 | 0.000E+00 | 7.740E+03 | 5.050E+05 | 1.040E+05 | 0.000E+00 | 4.210E+03 |
| MO-99 | 0.000E+00 | 1.210E+02 | 0.000E+00 | 2.910E+02 | 9.120E+04 | 2.480E+05 | 0.000E+00 | 2.300E+01 |
| TC-99M | 1.030E-03 | 2.910E-03 | 0.000E+00 | 4.420E-02 | 7.640E+02 | 4.160E+03 | 0.000E+00 | 3.700E-02 |
| TC-101 | 4.180E-05 | 6.020E-05 | 0.000E+00 | 1.080E-03 | 3.990E+02 | 1.090E-11 | 0.000E+00 | 5.900E-04 |
| RU-103 | 1.530E+03 | 0.000E+00 | 0.000E+00 | 5.830E+03 | 5.050E+05 | 1.100E+05 | 0.000E+00 | 6.580E+02 |
| RU-105 | 7.900E-01 | 0.000E+00 | 0.000E+00 | 1.020E+00 | 1.100E+04 | 4.820E+04 | 0.000E+00 | 3.110E-01 |
| RU-106 | 6.910E+04 | 0.000E+00 | 0.000E+00 | 1.340E+05 | 9.360E+06 | 9.120E+05 | 0.000E+00 | 8.720E+03 |
| AG-110M | 1.080E+04 | 1.000E+04 | 0.000E+00 | 1.970E+04 | 4.630E+06 | 3.020E+05 | 0.000E+00 | 5.940E+03 |
| TE-125M | 3.420E+03 | 1.580E+03 | 1.050E+03 | 1.240E+04 | 3.140E+05 | 7.060E+04 | 0.000E+00 | 4.670E+02 |
| TE-127 | 1.400E+00 | 6.420E-01 | 1.060E+00 | 5.100E+00 | 6.510E+03 | 5.740E+04 | 0.000E+00 | 3.100E-01 |
| TE-127M | 1.260E+04 | 5.770E+03 | 3.290E+03 | 4.580E+04 | 9.600E+05 | 1.500E+05 | 0.000E+00 | 1.570E+03 |
| TE-129 | 4.980E-02 | 2.390E-02 | 3.900E-02 | 1.870E-01 | 1.940E+03 | 1.570E+02 | 0.000E+00 | 1.240E-02 |
| TE-129M | 9.760E+03 | 4.670E+03 | 3.440E+03 | 3.660E+04 | 1.160E+06 | 3.830E+05 | 0.000E+00 | 1.580E+03 |
| TE-131 | 1.110E-02 | 5.950E-03 | 9.360E-03 | 4.370E-02 | 1.390E+03 | 1.840E+01 | 0.000E+00 | 3.590E-03 |
| TE-131M | 6.990E+01 | 4.360E+01 | 5.500E+01 | 3.090E+02 | 1.460E+05 | 5.560E+05 | 0.000E+00 | 2.900E+01 |
| TE-132 | 2.600E+02 | 2.150E+02 | 1.900E+02 | 1.460E+03 | 2.880E+05 | 5.100E+05 | 0.000E+00 | 1.620E+02 |
| I-130 | 4.580E+03 | 1.340E+04 | 1.140E+06 | 2.090E+04 | 0.000E+00 | 7.690E+03 | 0.000E+00 | 5.280E+03 |

# APPENDIX G

## $R_i$ Adult Dose Factors for use in the Gaseous Dose Calculations

| Agegroup: | ADULT | Pathway: | Inhalation (INHL) | | | Units: | mrem/yr / µCi/m$^3$ | |
|---|---|---|---|---|---|---|---|---|
| **Nuclide** | **Bone** | **Liver** | **Thyroid** | **Kidney** | **Lung** | **Gilli** | **Skin** | **Total Body** |
| I-131 | 2.520E+04 | 3.580E+04 | 1.190E+07 | 6.130E+04 | 0.000E+00 | 6.280E+03 | 0.000E+00 | 2.050E+04 |
| I-132 | 1.160E+03 | 3.260E+03 | 1.140E+05 | 5.180E+03 | 0.000E+00 | 4.060E+02 | 0.000E+00 | 1.160E+03 |
| I-133 | 8.640E+03 | 1.480E+04 | 2.150E+06 | 2.580E+04 | 0.000E+00 | 8.880E+03 | 0.000E+00 | 4.520E+03 |
| I-134 | 6.440E+02 | 1.730E+03 | 2.980E+04 | 2.750E+03 | 0.000E+00 | 1.010E+00 | 0.000E+00 | 6.150E+02 |
| I-135 | 2.680E+03 | 6.980E+03 | 4.480E+05 | 1.110E+04 | 0.000E+00 | 5.250E+03 | 0.000E+00 | 2.570E+03 |
| CS-134 | 3.730E+05 | 8.480E+05 | 0.000E+00 | 2.870E+05 | 9.760E+04 | 1.040E+04 | 0.000E+00 | 7.280E+05 |
| CS-136 | 3.900E+04 | 1.460E+05 | 0.000E+00 | 8.560E+04 | 1.200E+04 | 1.170E+04 | 0.000E+00 | 1.100E+05 |
| CS-137 | 4.780E+05 | 6.210E+05 | 0.000E+00 | 2.220E+05 | 7.520E+04 | 8.400E+03 | 0.000E+00 | 4.280E+05 |
| CS-138 | 3.310E+02 | 6.210E+02 | 0.000E+00 | 4.800E+02 | 4.860E+01 | 1.860E-03 | 0.000E+00 | 3.240E+02 |
| BA-139 | 9.360E-01 | 6.660E-04 | 0.000E+00 | 6.220E-04 | 3.760E+03 | 8.960E+02 | 0.000E+00 | 2.740E-02 |
| BA-140 | 3.900E+04 | 4.900E+01 | 0.000E+00 | 1.670E+01 | 1.270E+06 | 2.180E+05 | 0.000E+00 | 2.570E+03 |
| BA-141 | 1.000E-01 | 7.530E-05 | 0.000E+00 | 7.000E-05 | 1.940E+03 | 1.160E-07 | 0.000E+00 | 3.360E-03 |
| BA-142 | 2.630E-02 | 2.700E-05 | 0.000E+00 | 2.290E-05 | 1.190E+03 | 1.570E-16 | 0.000E+00 | 1.660E-03 |
| LA-140 | 3.440E+02 | 1.740E+02 | 0.000E+00 | 0.000E+00 | 1.360E+05 | 4.580E+05 | 0.000E+00 | 4.580E+01 |
| LA-142 | 6.830E-01 | 3.100E-01 | 0.000E+00 | 0.000E+00 | 6.330E+03 | 2.110E+03 | 0.000E+00 | 7.720E-02 |
| CE-141 | 1.990E+04 | 1.350E+04 | 0.000E+00 | 6.260E+03 | 3.620E+05 | 1.200E+05 | 0.000E+00 | 1.530E+03 |
| CE-143 | 1.860E+02 | 1.380E+02 | 0.000E+00 | 6.080E+01 | 7.980E+04 | 2.260E+05 | 0.000E+00 | 1.530E+01 |
| CE-144 | 3.430E+06 | 1.430E+06 | 0.000E+00 | 8.480E+05 | 7.780E+06 | 8.160E+05 | 0.000E+00 | 1.840E+05 |
| PR-143 | 9.360E+03 | 3.750E+03 | 0.000E+00 | 2.160E+03 | 2.810E+05 | 2.000E+05 | 0.000E+00 | 4.640E+02 |
| PR-144 | 3.010E-02 | 1.250E-02 | 0.000E+00 | 7.050E-03 | 1.020E+03 | 2.150E-08 | 0.000E+00 | 1.530E-03 |
| ND-147 | 5.270E+03 | 6.100E+03 | 0.000E+00 | 3.560E+03 | 2.210E+05 | 1.730E+05 | 0.000E+00 | 3.650E+02 |
| W-187 | 8.480E+00 | 7.080E+00 | 0.000E+00 | 0.000E+00 | 2.900E+04 | 1.550E+05 | 0.000E+00 | 2.480E+00 |
| NP-239 | 2.300E+02 | 2.260E+01 | 0.000E+00 | 7.000E+01 | 3.760E+04 | 1.190E+05 | 0.000E+00 | 1.240E+01 |

# APPENDIX G

## $R_i$ Adult Dose Factors for use in the Gaseous Dose Calculations

| Agegroup: | ADULT | Pathway: | Ground Plane Deposition (GPD) | | | Units: | $m^2$·mrem/yr / µCi/sec | |
|---|---|---|---|---|---|---|---|---|
| **Nuclide** | **Bone** | **Liver** | **Thyroid** | **Kidney** | **Lung** | **Gilli** | **Skin** | **Total Body** |
| H-3 | 0.000E+00 | 0.000E+00 | 0.000E+00 | 0.000E+00 | 0.000E+00 | 0.000E+00 | 0.000E+00 | 0.000E+00 |
| C-14 | 0.000E+00 | 0.000E+00 | 0.000E+00 | 0.000E+00 | 0.000E+00 | 0.000E+00 | 0.000E+00 | 0.000E+00 |
| NA-24 | 1.190E+07 | 1.190E+07 | 1.190E+07 | 1.190E+07 | 1.190E+07 | 1.190E+07 | 1.390E+07 | 1.190E+07 |
| P-32 | 0.000E+00 | 0.000E+00 | 0.000E+00 | 0.000E+00 | 0.000E+00 | 0.000E+00 | 0.000E+00 | 0.000E+00 |
| CR-51 | 4.660E+06 | 4.660E+06 | 4.660E+06 | 4.660E+06 | 4.660E+06 | 4.660E+06 | 5.510E+06 | 4.660E+06 |
| MN-54 | 1.390E+09 | 1.390E+09 | 1.390E+09 | 1.390E+09 | 1.390E+09 | 1.390E+09 | 1.630E+09 | 1.390E+09 |
| MN-56 | 9.020E+05 | 9.020E+05 | 9.020E+05 | 9.020E+05 | 9.020E+05 | 9.020E+05 | 1.070E+06 | 9.020E+05 |
| FE-55 | 0.000E+00 | 0.000E+00 | 0.000E+00 | 0.000E+00 | 0.000E+00 | 0.000E+00 | 0.000E+00 | 0.000E+00 |
| FE-59 | 2.730E+08 | 2.730E+08 | 2.730E+08 | 2.730E+08 | 2.730E+08 | 2.730E+08 | 3.210E+08 | 2.730E+08 |
| CO-58 | 3.790E+08 | 3.790E+08 | 3.790E+08 | 3.790E+08 | 3.790E+08 | 3.790E+08 | 4.440E+08 | 3.790E+08 |
| CO-60 | 2.150E+10 | 2.150E+10 | 2.150E+10 | 2.150E+10 | 2.150E+10 | 2.150E+10 | 2.530E+10 | 2.150E+10 |
| NI-63 | 0.000E+00 | 0.000E+00 | 0.000E+00 | 0.000E+00 | 0.000E+00 | 0.000E+00 | 0.000E+00 | 0.000E+00 |
| NI-65 | 2.970E+05 | 2.970E+05 | 2.970E+05 | 2.970E+05 | 2.970E+05 | 2.970E+05 | 3.450E+05 | 2.970E+05 |
| CU-64 | 6.070E+05 | 6.070E+05 | 6.070E+05 | 6.070E+05 | 6.070E+05 | 6.070E+05 | 6.880E+05 | 6.070E+05 |
| ZN-65 | 7.470E+08 | 7.470E+08 | 7.470E+08 | 7.470E+08 | 7.470E+08 | 7.470E+08 | 8.590E+08 | 7.470E+08 |
| ZN-69 | 0.000E+00 | 0.000E+00 | 0.000E+00 | 0.000E+00 | 0.000E+00 | 0.000E+00 | 0.000E+00 | 0.000E+00 |
| BR-83 | 4.870E+03 | 4.870E+03 | 4.870E+03 | 4.870E+03 | 4.870E+03 | 4.870E+03 | 7.080E+03 | 4.870E+03 |
| BR-84 | 2.030E+05 | 2.030E+05 | 2.030E+05 | 2.030E+05 | 2.030E+05 | 2.030E+05 | 2.360E+05 | 2.030E+05 |
| BR-85 | 0.000E+00 | 0.000E+00 | 0.000E+00 | 0.000E+00 | 0.000E+00 | 0.000E+00 | 0.000E+00 | 0.000E+00 |
| RB-86 | 8.990E+06 | 8.990E+06 | 8.990E+06 | 8.990E+06 | 8.990E+06 | 8.990E+06 | 1.030E+07 | 8.990E+06 |
| RB-88 | 3.310E+04 | 3.310E+04 | 3.310E+04 | 3.310E+04 | 3.310E+04 | 3.310E+04 | 3.780E+04 | 3.310E+04 |
| RB-89 | 1.230E+05 | 1.230E+05 | 1.230E+05 | 1.230E+05 | 1.230E+05 | 1.230E+05 | 1.480E+05 | 1.230E+05 |
| SR-89 | 2.160E+04 | 2.160E+04 | 2.160E+04 | 2.160E+04 | 2.160E+04 | 2.160E+04 | 2.510E+04 | 2.160E+04 |
| SR-90 | 0.000E+00 | 0.000E+00 | 0.000E+00 | 0.000E+00 | 0.000E+00 | 0.000E+00 | 0.000E+00 | 0.000E+00 |
| SR-91 | 2.150E+06 | 2.150E+06 | 2.150E+06 | 2.150E+06 | 2.150E+06 | 2.150E+06 | 2.510E+06 | 2.150E+06 |

# APPENDIX G

## $R_i$ Adult Dose Factors for use in the Gaseous Dose Calculations

| Agegroup: | ADULT | Pathway: | Ground Plane Deposition (GPD) | | | Units: | $m^2$·mrem/yr / µCi/sec | |
|---|---|---|---|---|---|---|---|---|
| **Nuclide** | **Bone** | **Liver** | **Thyroid** | **Kidney** | **Lung** | **Gilli** | **Skin** | **Total Body** |
| SR-92 | 7.770E+05 | 7.770E+05 | 7.770E+05 | 7.770E+05 | 7.770E+05 | 7.770E+05 | 8.630E+05 | 7.770E+05 |
| Y-90 | 4.490E+03 | 4.490E+03 | 4.490E+03 | 4.490E+03 | 4.490E+03 | 4.490E+03 | 5.310E+03 | 4.490E+03 |
| Y-91 | 1.070E+06 | 1.070E+06 | 1.070E+06 | 1.070E+06 | 1.070E+06 | 1.070E+06 | 1.210E+06 | 1.070E+06 |
| Y-91M | 1.000E+05 | 1.000E+05 | 1.000E+05 | 1.000E+05 | 1.000E+05 | 1.000E+05 | 1.160E+05 | 1.000E+05 |
| Y-92 | 1.800E+05 | 1.800E+05 | 1.800E+05 | 1.800E+05 | 1.800E+05 | 1.800E+05 | 2.140E+05 | 1.800E+05 |
| Y-93 | 1.830E+05 | 1.830E+05 | 1.830E+05 | 1.830E+05 | 1.830E+05 | 1.830E+05 | 2.510E+05 | 1.830E+05 |
| ZR-95 | 2.450E+08 | 2.450E+08 | 2.450E+08 | 2.450E+08 | 2.450E+08 | 2.450E+08 | 2.840E+08 | 2.450E+08 |
| ZR-97 | 2.960E+06 | 2.960E+06 | 2.960E+06 | 2.960E+06 | 2.960E+06 | 2.960E+06 | 3.440E+06 | 2.960E+06 |
| NB-95 | 1.370E+08 | 1.370E+08 | 1.370E+08 | 1.370E+08 | 1.370E+08 | 1.370E+08 | 1.610E+08 | 1.370E+08 |
| MO-99 | 3.990E+06 | 3.990E+06 | 3.990E+06 | 3.990E+06 | 3.990E+06 | 3.990E+06 | 4.630E+06 | 3.990E+06 |
| TC-99M | 1.840E+05 | 1.840E+05 | 1.840E+05 | 1.840E+05 | 1.840E+05 | 1.840E+05 | 2.110E+05 | 1.840E+05 |
| TC-101 | 2.040E+04 | 2.040E+04 | 2.040E+04 | 2.040E+04 | 2.040E+04 | 2.040E+04 | 2.260E+04 | 2.040E+04 |
| RU-103 | 1.080E+08 | 1.080E+08 | 1.080E+08 | 1.080E+08 | 1.080E+08 | 1.080E+08 | 1.260E+08 | 1.080E+08 |
| RU-105 | 6.360E+05 | 6.360E+05 | 6.360E+05 | 6.360E+05 | 6.360E+05 | 6.360E+05 | 7.210E+05 | 6.360E+05 |
| RU-106 | 4.220E+08 | 4.220E+08 | 4.220E+08 | 4.220E+08 | 4.220E+08 | 4.220E+08 | 5.070E+08 | 4.220E+08 |
| AG-110M | 3.440E+09 | 3.440E+09 | 3.440E+09 | 3.440E+09 | 3.440E+09 | 3.440E+09 | 4.010E+09 | 3.440E+09 |
| TE-125M | 1.550E+06 | 1.550E+06 | 1.550E+06 | 1.550E+06 | 1.550E+06 | 1.550E+06 | 2.130E+06 | 1.550E+06 |
| TE-127 | 2.980E+03 | 2.980E+03 | 2.980E+03 | 2.980E+03 | 2.980E+03 | 2.980E+03 | 3.280E+03 | 2.980E+03 |
| TE-127M | 9.160E+04 | 9.160E+04 | 9.160E+04 | 9.160E+04 | 9.160E+04 | 9.160E+04 | 1.080E+05 | 9.160E+04 |
| TE-129 | 2.620E+04 | 2.620E+04 | 2.620E+04 | 2.620E+04 | 2.620E+04 | 2.620E+04 | 3.100E+04 | 2.620E+04 |
| TE-129M | 1.980E+07 | 1.980E+07 | 1.980E+07 | 1.980E+07 | 1.980E+07 | 1.980E+07 | 2.310E+07 | 1.980E+07 |
| TE-131 | 2.920E+04 | 2.920E+04 | 2.920E+04 | 2.920E+04 | 2.920E+04 | 2.920E+04 | 3.450E+07 | 2.920E+04 |
| TE-131M | 8.030E+06 | 8.030E+06 | 8.030E+06 | 8.030E+06 | 8.030E+06 | 8.030E+06 | 9.460E+06 | 8.030E+06 |
| TE-132 | 4.230E+06 | 4.230E+06 | 4.230E+06 | 4.230E+06 | 4.230E+06 | 4.230E+06 | 4.980E+06 | 4.230E+06 |
| I-130 | 5.510E+06 | 5.510E+06 | 5.510E+06 | 5.510E+06 | 5.510E+06 | 5.510E+06 | 6.690E+06 | 5.510E+06 |

# APPENDIX G

## $R_i$ Adult Dose Factors for use in the Gaseous Dose Calculations

| Agegroup: | ADULT | Pathway: | Ground Plane Deposition (GPD) | | | Units: | $m^2$·mrem/yr / µCi/sec | |
|---|---|---|---|---|---|---|---|---|
| **Nuclide** | **Bone** | **Liver** | **Thyroid** | **Kidney** | **Lung** | **Gilli** | **Skin** | **Total Body** |
| I-131 | 1.720E+07 | 1.720E+07 | 1.720E+07 | 1.720E+07 | 1.720E+07 | 1.720E+07 | 2.090E+07 | 1.720E+07 |
| I-132 | 1.250E+06 | 1.250E+06 | 1.250E+06 | 1.250E+06 | 1.250E+06 | 1.250E+06 | 1.470E+06 | 1.250E+06 |
| I-133 | 2.450E+06 | 2.450E+06 | 2.450E+06 | 2.450E+06 | 2.450E+06 | 2.450E+06 | 2.980E+06 | 2.450E+06 |
| I-134 | 4.470E+05 | 4.470E+05 | 4.470E+05 | 4.470E+05 | 4.470E+05 | 4.470E+05 | 5.300E+05 | 4.470E+05 |
| I-135 | 2.530E+06 | 2.530E+06 | 2.530E+06 | 2.530E+06 | 2.530E+06 | 2.530E+06 | 2.950E+06 | 2.530E+06 |
| CS-134 | 6.860E+09 | 6.860E+09 | 6.860E+09 | 6.860E+09 | 6.860E+09 | 6.860E+09 | 8.000E+09 | 6.860E+09 |
| CS-136 | 1.510E+08 | 1.510E+08 | 1.510E+08 | 1.510E+08 | 1.510E+08 | 1.510E+08 | 1.710E+08 | 1.510E+08 |
| CS-137 | 1.030E+10 | 1.030E+10 | 1.030E+10 | 1.030E+10 | 1.030E+10 | 1.030E+10 | 1.200E+10 | 1.030E+10 |
| CS-138 | 3.590E+05 | 3.590E+05 | 3.590E+05 | 3.590E+05 | 3.590E+05 | 3.590E+05 | 4.100E+05 | 3.590E+05 |
| BA-139 | 1.060E+05 | 1.060E+05 | 1.060E+05 | 1.060E+05 | 1.060E+05 | 1.060E+05 | 1.190E+05 | 1.060E+05 |
| BA-140 | 2.050E+07 | 2.050E+07 | 2.050E+07 | 2.050E+07 | 2.050E+07 | 2.050E+07 | 2.350E+07 | 2.050E+07 |
| BA-141 | 4.170E+04 | 4.170E+04 | 4.170E+04 | 4.170E+04 | 4.170E+04 | 4.170E+04 | 4.750E+04 | 4.170E+04 |
| BA-142 | 4.490E+04 | 4.490E+04 | 4.490E+04 | 4.490E+04 | 4.490E+04 | 4.490E+04 | 5.110E+04 | 4.490E+04 |
| LA-140 | 1.920E+07 | 1.920E+07 | 1.920E+07 | 1.920E+07 | 1.920E+07 | 1.920E+07 | 2.180E+07 | 1.920E+07 |
| LA-142 | 7.600E+05 | 7.600E+05 | 7.600E+05 | 7.600E+05 | 7.600E+05 | 7.600E+05 | 9.120E+05 | 7.600E+05 |
| CE-141 | 1.370E+07 | 1.370E+07 | 1.370E+07 | 1.370E+07 | 1.370E+07 | 1.370E+07 | 1.540E+07 | 1.370E+07 |
| CE-143 | 2.310E+06 | 2.310E+06 | 2.310E+06 | 2.310E+06 | 2.310E+06 | 2.310E+06 | 2.630E+06 | 2.310E+06 |
| CE-144 | 6.950E+07 | 6.950E+07 | 6.950E+07 | 6.950E+07 | 6.950E+07 | 6.950E+07 | 8.040E+07 | 6.950E+07 |
| PR-143 | 0.000E+00 | 0.000E+00 | 0.000E+00 | 0.000E+00 | 0.000E+00 | 0.000E+00 | 0.000E+00 | 0.000E+00 |
| PR-144 | 1.830E+03 | 1.830E+03 | 1.830E+03 | 1.830E+03 | 1.830E+03 | 1.830E+03 | 2.110E+03 | 1.830E+03 |
| ND-147 | 8.390E+06 | 8.390E+06 | 8.390E+06 | 8.390E+06 | 8.390E+06 | 8.390E+06 | 1.010E+07 | 8.390E+06 |
| W-187 | 2.350E+06 | 2.350E+06 | 2.350E+06 | 2.350E+06 | 2.350E+06 | 2.350E+06 | 2.730E+06 | 2.350E+06 |
| NP-239 | 1.710E+06 | 1.710E+06 | 1.710E+06 | 1.710E+06 | 1.710E+06 | 1.710E+06 | 1.980E+06 | 1.710E+06 |

# APPENDIX H

## $R_i$ Teen Dose Factors for use in the Gaseous Dose Calculations

| Agegroup: | TEEN | Pathway: | Grs/Cow/Milk (CMILK) | | | Units: | $m^2$·mrem/yr / µCi/sec; mrem/yr / µCi/$m^3$ (H-3, C-14) | |
|---|---|---|---|---|---|---|---|---|
| **Nuclide** | **Bone** | **Liver** | **Thyroid** | **Kidney** | **Lung** | **Gilli** | **Skin** | **Total Body** |
| H-3 | 0.000E+00 | 9.940E+02 | 9.940E+02 | 9.940E+02 | 9.940E+02 | 9.940E+02 | 0.000E+00 | 9.940E+02 |
| C-14 | 4.690E+04 | 9.380E+03 | 9.380E+03 | 9.380E+03 | 9.380E+03 | 9.380E+03 | 0.000E+00 | 9.380E+03 |
| NA-24 | 4.260E+06 | 4.260E+06 | 4.260E+06 | 4.260E+06 | 4.260E+06 | 4.260E+06 | 0.000E+00 | 4.260E+06 |
| P-32 | 3.150E+10 | 1.950E+09 | 0.000E+00 | 0.000E+00 | 0.000E+00 | 2.650E+09 | 0.000E+00 | 1.220E+09 |
| CR-51 | 0.000E+00 | 0.000E+00 | 2.770E+04 | 1.090E+04 | 7.130E+04 | 8.390E+06 | 0.000E+00 | 4.990E+04 |
| MN-54 | 0.000E+00 | 1.400E+07 | 0.000E+00 | 4.180E+06 | 0.000E+00 | 2.870E+07 | 0.000E+00 | 2.780E+06 |
| MN-56 | 0.000E+00 | 7.250E-03 | 0.000E+00 | 9.180E-03 | 0.000E+00 | 4.770E-01 | 0.000E+00 | 1.290E-03 |
| FE-55 | 4.450E+07 | 3.160E+07 | 0.000E+00 | 0.000E+00 | 2.000E+07 | 1.370E+07 | 0.000E+00 | 7.360E+06 |
| FE-59 | 5.180E+07 | 1.210E+08 | 0.000E+00 | 0.000E+00 | 3.810E+07 | 2.860E+08 | 0.000E+00 | 4.670E+07 |
| CO-58 | 0.000E+00 | 7.940E+06 | 0.000E+00 | 0.000E+00 | 0.000E+00 | 1.090E+08 | 0.000E+00 | 1.830E+07 |
| CO-60 | 0.000E+00 | 2.780E+07 | 0.000E+00 | 0.000E+00 | 0.000E+00 | 3.620E+08 | 0.000E+00 | 6.260E+07 |
| NI-63 | 1.180E+10 | 8.350E+08 | 0.000E+00 | 0.000E+00 | 0.000E+00 | 1.330E+08 | 0.000E+00 | 4.010E+08 |
| NI-65 | 6.770E-01 | 8.650E-02 | 0.000E+00 | 0.000E+00 | 0.000E+00 | 4.690E+00 | 0.000E+00 | 3.940E-02 |
| CU-64 | 0.000E+00 | 4.250E+04 | 0.000E+00 | 1.070E+05 | 0.000E+00 | 3.290E+06 | 0.000E+00 | 2.000E+04 |
| ZN-65 | 2.110E+09 | 7.320E+09 | 0.000E+00 | 4.680E+09 | 0.000E+00 | 3.100E+09 | 0.000E+00 | 3.410E+09 |
| ZN-69 | 3.850E-12 | 7.330E-12 | 0.000E+00 | 4.790E-12 | 0.000E+00 | 1.350E-11 | 0.000E+00 | 5.130E-13 |
| BR-83 | 0.000E+00 | 0.000E+00 | 0.000E+00 | 0.000E+00 | 0.000E+00 | 0.000E+00 | 0.000E+00 | 1.790E-01 |
| BR-84 | 0.000E+00 | 0.000E+00 | 0.000E+00 | 0.000E+00 | 0.000E+00 | 0.000E+00 | 0.000E+00 | 2.880E-23 |
| BR-85 | 0.000E+00 | 0.000E+00 | 0.000E+00 | 0.000E+00 | 0.000E+00 | 0.000E+00 | 0.000E+00 | 0.000E+00 |
| RB-86 | 0.000E+00 | 4.730E+09 | 0.000E+00 | 0.000E+00 | 0.000E+00 | 7.000E+08 | 0.000E+00 | 2.220E+09 |
| RB-88 | 0.000E+00 | 3.890E-45 | 0.000E+00 | 0.000E+00 | 0.000E+00 | 3.330E-52 | 0.000E+00 | 2.070E-45 |
| RB-89 | 0.000E+00 | 7.660E-53 | 0.000E+00 | 0.000E+00 | 0.000E+00 | 1.170E-61 | 0.000E+00 | 5.420E-53 |
| SR-89 | 2.670E+09 | 0.000E+00 | 0.000E+00 | 0.000E+00 | 0.000E+00 | 3.190E+08 | 0.000E+00 | 7.660E+07 |
| SR-90 | 6.610E+10 | 0.000E+00 | 0.000E+00 | 0.000E+00 | 0.000E+00 | 1.860E+09 | 0.000E+00 | 1.630E+10 |
| SR-91 | 5.310E+04 | 0.000E+00 | 0.000E+00 | 0.000E+00 | 0.000E+00 | 2.410E+05 | 0.000E+00 | 2.110E+03 |

# APPENDIX H

## $R_i$ Teen Dose Factors for use in the Gaseous Dose Calculations

| Agegroup: | TEEN | Pathway: | Grs/Cow/Milk (CMILK) | | | Units: | $m^2$·mrem/yr / µCi/sec; mrem/yr / µCi/$m^3$ (H-3, C-14) | |
|---|---|---|---|---|---|---|---|---|
| **Nuclide** | **Bone** | **Liver** | **Thyroid** | **Kidney** | **Lung** | **Gilli** | **Skin** | **Total Body** |
| SR-92 | 8.940E-01 | 0.000E+00 | 0.000E+00 | 0.000E+00 | 0.000E+00 | 2.280E+01 | 0.000E+00 | 3.810E-02 |
| Y-90 | 1.300E+02 | 0.000E+00 | 0.000E+00 | 0.000E+00 | 0.000E+00 | 1.070E+06 | 0.000E+00 | 3.510E+00 |
| Y-91 | 1.580E+04 | 0.000E+00 | 0.000E+00 | 0.000E+00 | 0.000E+00 | 6.480E+06 | 0.000E+00 | 4.240E+02 |
| Y-91M | 1.090E-19 | 0.000E+00 | 0.000E+00 | 0.000E+00 | 0.000E+00 | 5.170E-18 | 0.000E+00 | 4.180E-21 |
| Y-92 | 1.030E-04 | 0.000E+00 | 0.000E+00 | 0.000E+00 | 0.000E+00 | 2.830E+00 | 0.000E+00 | 2.980E-06 |
| Y-93 | 4.120E-01 | 0.000E+00 | 0.000E+00 | 0.000E+00 | 0.000E+00 | 1.260E+04 | 0.000E+00 | 1.130E-02 |
| ZR-95 | 1.650E+03 | 5.200E+02 | 0.000E+00 | 7.650E+02 | 0.000E+00 | 1.200E+06 | 0.000E+00 | 3.580E+02 |
| ZR-97 | 7.880E-01 | 1.560E-01 | 0.000E+00 | 2.370E-01 | 0.000E+00 | 4.220E+04 | 0.000E+00 | 7.190E-02 |
| NB-95 | 1.410E+05 | 7.810E+04 | 0.000E+00 | 7.570E+04 | 0.000E+00 | 3.340E+08 | 0.000E+00 | 4.300E+04 |
| MO-99 | 0.000E+00 | 4.470E+07 | 0.000E+00 | 1.020E+08 | 0.000E+00 | 8.010E+07 | 0.000E+00 | 8.530E+06 |
| TC-99M | 5.760E+00 | 1.610E+01 | 0.000E+00 | 2.390E+02 | 8.920E+00 | 1.050E+04 | 0.000E+00 | 2.080E+02 |
| TC-101 | 4.740E-60 | 6.750E-60 | 0.000E+00 | 1.220E-58 | 4.110E-60 | 1.150E-66 | 0.000E+00 | 6.630E-59 |
| RU-103 | 1.810E+03 | 0.000E+00 | 0.000E+00 | 6.380E+03 | 0.000E+00 | 1.510E+05 | 0.000E+00 | 7.740E+02 |
| RU-105 | 1.560E-03 | 0.000E+00 | 0.000E+00 | 1.970E-02 | 0.000E+00 | 1.260E+00 | 0.000E+00 | 6.070E-04 |
| RU-106 | 3.750E+04 | 0.000E+00 | 0.000E+00 | 7.240E+04 | 0.000E+00 | 1.800E+06 | 0.000E+00 | 4.730E+03 |
| AG-110M | 9.630E+07 | 9.110E+07 | 0.000E+00 | 1.740E+08 | 0.000E+00 | 2.560E+10 | 0.000E+00 | 5.540E+07 |
| TE-125M | 3.000E+07 | 1.080E+07 | 8.390E+06 | 0.000E+00 | 0.000E+00 | 8.860E+07 | 0.000E+00 | 4.020E+06 |
| TE-127 | 1.210E+03 | 4.290E+02 | 8.350E+02 | 4.900E+03 | 0.000E+00 | 9.340E+04 | 0.000E+00 | 2.600E+02 |
| TE-127M | 8.440E+07 | 2.990E+07 | 2.010E+07 | 3.420E+08 | 0.000E+00 | 2.100E+08 | 0.000E+00 | 1.000E+07 |
| TE-129 | 5.200E-10 | 1.940E-10 | 3.720E-10 | 2.180E-09 | 0.000E+00 | 2.840E-09 | 0.000E+00 | 1.270E-10 |
| TE-129M | 1.100E+08 | 4.090E+07 | 3.550E+07 | 4.610E+08 | 0.000E+00 | 4.130E+08 | 0.000E+00 | 1.740E+07 |
| TE-131 | 6.580E-33 | 2.710E-33 | 5.070E-33 | 2.880E-32 | 0.000E+00 | 5.400E-34 | 0.000E+00 | 2.060E-33 |
| TE-131M | 6.570E+05 | 3.150E+05 | 4.740E+05 | 3.290E+06 | 0.000E+00 | 2.530E+07 | 0.000E+00 | 2.630E+05 |
| TE-132 | 4.290E+06 | 2.720E+06 | 2.870E+06 | 2.610E+07 | 0.000E+00 | 8.610E+07 | 0.000E+00 | 2.560E+06 |
| I-130 | 7.380E+05 | 2.140E+06 | 1.740E+08 | 3.290E+06 | 0.000E+00 | 1.640E+06 | 0.000E+00 | 8.530E+05 |

# APPENDIX H

## $R_i$ Teen Dose Factors for use in the Gaseous Dose Calculations

| Agegroup: | TEEN | Pathway: | Grs/Cow/Milk (CMILK) | | | Units: | $m^2$·mrem/yr / µCi/sec; mrem/yr / µCi/$m^3$ (H-3, C-14) | |
|---|---|---|---|---|---|---|---|---|
| **Nuclide** | **Bone** | **Liver** | **Thyroid** | **Kidney** | **Lung** | **Gilli** | **Skin** | **Total Body** |
| I-131 | 5.370E+08 | 7.520E+08 | 2.190E+11 | 1.290E+09 | 0.000E+00 | 1.490E+08 | 0.000E+00 | 4.040E+08 |
| I-132 | 2.910E-01 | 7.620E-01 | 2.570E+01 | 1.200E+00 | 0.000E+00 | 3.320E-01 | 0.000E+00 | 2.740E-01 |
| I-133 | 7.070E+06 | 1.200E+07 | 1.670E+09 | 2.100E+07 | 0.000E+00 | 9.070E+06 | 0.000E+00 | 3.660E+06 |
| I-134 | 3.580E-12 | 9.500E-12 | 1.580E-10 | 1.500E-11 | 0.000E+00 | 1.250E-13 | 0.000E+00 | 3.410E-12 |
| I-135 | 2.280E+04 | 5.870E+04 | 3.780E+06 | 9.270E+04 | 0.000E+00 | 6.510E+04 | 0.000E+00 | 2.180E+04 |
| CS-134 | 9.820E+09 | 2.310E+10 | 0.000E+00 | 7.340E+09 | 2.800E+09 | 2.870E+08 | 0.000E+00 | 1.070E+10 |
| CS-136 | 4.480E+08 | 1.760E+09 | 0.000E+00 | 9.600E+08 | 1.510E+08 | 1.420E+08 | 0.000E+00 | 1.180E+09 |
| CS-137 | 1.340E+10 | 1.780E+10 | 0.000E+00 | 6.060E+09 | 2.350E+09 | 2.530E+08 | 0.000E+00 | 6.200E+09 |
| CS-138 | 1.640E-23 | 3.150E-23 | 0.000E+00 | 2.330E-23 | 2.710E-24 | 1.430E-26 | 0.000E+00 | 1.580E-23 |
| BA-139 | 8.170E-08 | 5.750E-11 | 0.000E+00 | 5.420E-11 | 3.960E-11 | 7.290E-07 | 0.000E+00 | 2.380E-09 |
| BA-140 | 4.850E+07 | 5.950E+04 | 0.000E+00 | 2.020E+04 | 4.000E+04 | 7.480E+07 | 0.000E+00 | 3.130E+06 |
| BA-141 | 7.520E-46 | 5.620E-49 | 0.000E+00 | 5.210E-49 | 3.850E-49 | 1.600E-51 | 0.000E+00 | 2.510E-47 |
| BA-142 | 4.790E-80 | 4.790E-83 | 0.000E+00 | 4.050E-83 | 3.190E-83 | 1.470E-91 | 0.000E+00 | 2.950E-81 |
| LA-140 | 8.100E+00 | 3.980E+00 | 0.000E+00 | 0.000E+00 | 0.000E+00 | 2.290E+05 | 0.000E+00 | 1.060E+00 |
| LA-142 | 3.360E-11 | 1.490E-11 | 0.000E+00 | 0.000E+00 | 0.000E+00 | 4.540E-07 | 0.000E+00 | 3.710E-12 |
| CE-141 | 8.880E+03 | 5.930E+03 | 0.000E+00 | 2.790E+03 | 0.000E+00 | 1.700E+07 | 0.000E+00 | 6.810E+02 |
| CE-143 | 7.640E+01 | 5.560E+04 | 0.000E+00 | 2.490E+01 | 0.000E+00 | 1.670E+06 | 0.000E+00 | 6.210E+00 |
| CE-144 | 6.580E+05 | 2.720E+05 | 0.000E+00 | 1.630E+05 | 0.000E+00 | 1.660E+08 | 0.000E+00 | 3.540E+04 |
| PR-143 | 2.900E+02 | 1.160E+02 | 0.000E+00 | 6.730E+01 | 0.000E+00 | 9.540E+05 | 0.000E+00 | 1.440E+01 |
| PR-144 | 1.080E-53 | 4.430E-54 | 0.000E+00 | 2.540E-54 | 0.000E+00 | 1.190E-56 | 0.000E+00 | 5.490E-55 |
| ND-147 | 1.810E+02 | 1.970E+02 | 0.000E+00 | 1.160E+02 | 0.000E+00 | 7.110E+05 | 0.000E+00 | 1.180E+01 |
| W-187 | 1.190E+04 | 9.710E+03 | 0.000E+00 | 0.000E+00 | 0.000E+00 | 2.630E+06 | 0.000E+00 | 3.400E+03 |
| NP-239 | 7.010E+00 | 6.610E-01 | 0.000E+00 | 2.070E+00 | 0.000E+00 | 1.060E+05 | 0.000E+00 | 3.670E-01 |

# APPENDIX H

## $R_i$ Teen Dose Factors for use in the Gaseous Dose Calculations

| Agegroup: | TEEN | Pathway: | Grs/Goat/Milk (GMILK) | | | Units: | $m^2$·mrem/yr / µCi/sec; mrem/yr / µCi/$m^3$ (H-3, C-14) | |
|---|---|---|---|---|---|---|---|---|
| **Nuclide** | **Bone** | **Liver** | **Thyroid** | **Kidney** | **Lung** | **Gilli** | **Skin** | **Total Body** |
| H-3 | 0.000E+00 | 2.030E+03 | 2.030E+03 | 2.030E+03 | 2.030E+03 | 2.030E+03 | 0.000E+00 | 2.030E+03 |
| C-14 | 4.690E+04 | 9.380E+03 | 9.380E+03 | 9.380E+03 | 9.380E+03 | 9.380E+03 | 0.000E+00 | 9.380E+03 |
| NA-24 | 5.110E+05 | 5.110E+05 | 5.110E+05 | 5.110E+05 | 5.110E+05 | 5.110E+05 | 0.000E+00 | 5.110E+05 |
| P-32 | 3.780E+10 | 2.340E+09 | 0.000E+00 | 0.000E+00 | 0.000E+00 | 3.180E+09 | 0.000E+00 | 1.470E+09 |
| CR-51 | 0.000E+00 | 0.000E+00 | 3.330E+03 | 1.310E+03 | 8.550E+03 | 1.010E+06 | 0.000E+00 | 5.990E+03 |
| MN-54 | 0.000E+00 | 1.680E+06 | 0.000E+00 | 5.020E+05 | 0.000E+00 | 3.450E+06 | 0.000E+00 | 3.340E+05 |
| MN-56 | 0.000E+00 | 8.700E-04 | 0.000E+00 | 1.100E-03 | 0.000E+00 | 5.730E-02 | 0.000E+00 | 1.550E-04 |
| FE-55 | 5.790E+05 | 4.110E+05 | 0.000E+00 | 0.000E+00 | 2.600E+05 | 1.780E+05 | 0.000E+00 | 9.570E+04 |
| FE-59 | 6.740E+05 | 1.570E+06 | 0.000E+00 | 0.000E+00 | 4.960E+05 | 3.720E+06 | 0.000E+00 | 6.070E+05 |
| CO-58 | 0.000E+00 | 9.520E+05 | 0.000E+00 | 0.000E+00 | 0.000E+00 | 1.310E+07 | 0.000E+00 | 2.190E+06 |
| CO-60 | 0.000E+00 | 3.340E+06 | 0.000E+00 | 0.000E+00 | 0.000E+00 | 4.350E+07 | 0.000E+00 | 7.520E+06 |
| NI-63 | 1.420E+09 | 1.000E+08 | 0.000E+00 | 0.000E+00 | 0.000E+00 | 1.590E+07 | 0.000E+00 | 4.810E+07 |
| NI-65 | 8.120E-02 | 1.040E-02 | 0.000E+00 | 0.000E+00 | 0.000E+00 | 5.630E-01 | 0.000E+00 | 4.730E-03 |
| CU-64 | 0.000E+00 | 4.730E+03 | 0.000E+00 | 1.200E+04 | 0.000E+00 | 3.670E+05 | 0.000E+00 | 2.230E+03 |
| ZN-65 | 2.530E+08 | 8.780E+08 | 0.000E+00 | 5.620E+08 | 0.000E+00 | 3.720E+08 | 0.000E+00 | 4.100E+08 |
| ZN-69 | 4.620E-13 | 8.800E-13 | 0.000E+00 | 5.750E-13 | 0.000E+00 | 1.620E-12 | 0.000E+00 | 6.160E-14 |
| BR-83 | 0.000E+00 | 0.000E+00 | 0.000E+00 | 0.000E+00 | 0.000E+00 | 0.000E+00 | 0.000E+00 | 2.150E-02 |
| BR-84 | 0.000E+00 | 0.000E+00 | 0.000E+00 | 0.000E+00 | 0.000E+00 | 0.000E+00 | 0.000E+00 | 3.450E-24 |
| BR-85 | 0.000E+00 | 0.000E+00 | 0.000E+00 | 0.000E+00 | 0.000E+00 | 0.000E+00 | 0.000E+00 | 0.000E+00 |
| RB-86 | 0.000E+00 | 5.670E+08 | 0.000E+00 | 0.000E+00 | 0.000E+00 | 8.400E+07 | 0.000E+00 | 2.670E+08 |
| RB-88 | 0.000E+00 | 4.670E-46 | 0.000E+00 | 0.000E+00 | 0.000E+00 | 4.000E-53 | 0.000E+00 | 2.490E-46 |
| RB-89 | 0.000E+00 | 9.190E-54 | 0.000E+00 | 0.000E+00 | 0.000E+00 | 1.410E-62 | 0.000E+00 | 6.500E-54 |
| SR-89 | 5.620E+09 | 0.000E+00 | 0.000E+00 | 0.000E+00 | 0.000E+00 | 6.690E+08 | 0.000E+00 | 1.610E+08 |
| SR-90 | 1.390E+11 | 0.000E+00 | 0.000E+00 | 0.000E+00 | 0.000E+00 | 3.900E+09 | 0.000E+00 | 3.430E+10 |
| SR-91 | 1.120E+05 | 0.000E+00 | 0.000E+00 | 0.000E+00 | 0.000E+00 | 5.060E+05 | 0.000E+00 | 4.440E+03 |

# APPENDIX H

## $R_i$ Teen Dose Factors for use in the Gaseous Dose Calculations

| Agegroup: | TEEN | Pathway: | Grs/Goat/Milk (GMILK) | | | Units: | $m^2$·mrem/yr / µCi/sec; mrem/yr / µCi/$m^3$ (H-3, C-14) | |
|---|---|---|---|---|---|---|---|---|
| **Nuclide** | **Bone** | **Liver** | **Thyroid** | **Kidney** | **Lung** | **Gilli** | **Skin** | **Total Body** |
| SR-92 | 1.880E+00 | 0.000E+00 | 0.000E+00 | 0.000E+00 | 0.000E+00 | 4.780E+01 | 0.000E+00 | 8.000E-02 |
| Y-90 | 1.560E+01 | 0.000E+00 | 0.000E+00 | 0.000E+00 | 0.000E+00 | 1.290E+05 | 0.000E+00 | 4.210E-01 |
| Y-91 | 1.900E+03 | 0.000E+00 | 0.000E+00 | 0.000E+00 | 0.000E+00 | 7.770E+05 | 0.000E+00 | 5.080E+01 |
| Y-91M | 1.310E-20 | 0.000E+00 | 0.000E+00 | 0.000E+00 | 0.000E+00 | 6.200E-19 | 0.000E+00 | 5.020E-22 |
| Y-92 | 1.240E-05 | 0.000E+00 | 0.000E+00 | 0.000E+00 | 0.000E+00 | 3.390E-01 | 0.000E+00 | 3.580E-07 |
| Y-93 | 4.940E-02 | 0.000E+00 | 0.000E+00 | 0.000E+00 | 0.000E+00 | 1.510E+03 | 0.000E+00 | 1.360E-03 |
| ZR-95 | 1.980E+02 | 6.250E+01 | 0.000E+00 | 9.180E+01 | 0.000E+00 | 1.440E+05 | 0.000E+00 | 4.300E+01 |
| ZR-97 | 9.460E-02 | 1.870E-02 | 0.000E+00 | 2.840E-02 | 0.000E+00 | 5.070E+03 | 0.000E+00 | 8.620E-03 |
| NB-95 | 1.690E+04 | 9.370E+03 | 0.000E+00 | 9.080E+03 | 0.000E+00 | 4.010E+07 | 0.000E+00 | 5.160E+03 |
| MO-99 | 0.000E+00 | 5.370E+06 | 0.000E+00 | 1.230E+07 | 0.000E+00 | 9.610E+06 | 0.000E+00 | 1.020E+06 |
| TC-99M | 6.910E-01 | 1.930E+00 | 0.000E+00 | 2.870E+01 | 1.070E+00 | 1.270E+03 | 0.000E+00 | 2.500E+01 |
| TC-101 | 5.690E-61 | 8.100E-61 | 0.000E+00 | 1.460E-59 | 4.930E-61 | 1.380E-67 | 0.000E+00 | 7.950E-60 |
| RU-103 | 2.170E+02 | 0.000E+00 | 0.000E+00 | 7.660E+02 | 0.000E+00 | 1.810E+04 | 0.000E+00 | 9.290E+01 |
| RU-105 | 1.880E-04 | 0.000E+00 | 0.000E+00 | 2.370E-03 | 0.000E+00 | 1.520E-01 | 0.000E+00 | 7.290E-05 |
| RU-106 | 4.500E+03 | 0.000E+00 | 0.000E+00 | 8.680E+03 | 0.000E+00 | 2.160E+05 | 0.000E+00 | 5.670E+02 |
| AG-110M | 1.160E+07 | 1.090E+07 | 0.000E+00 | 2.080E+07 | 0.000E+00 | 3.070E+09 | 0.000E+00 | 6.650E+06 |
| TE-125M | 3.600E+06 | 1.300E+06 | 1.010E+06 | 0.000E+00 | 0.000E+00 | 1.060E+07 | 0.000E+00 | 4.820E+05 |
| TE-127 | 1.450E+02 | 5.150E+01 | 1.000E+02 | 5.880E+02 | 0.000E+00 | 1.120E+04 | 0.000E+00 | 3.120E+01 |
| TE-127M | 1.010E+07 | 3.590E+06 | 2.410E+06 | 4.100E+07 | 0.000E+00 | 2.520E+07 | 0.000E+00 | 1.200E+06 |
| TE-129 | 6.240E-11 | 2.330E-11 | 4.460E-11 | 2.620E-10 | 0.000E+00 | 3.410E-10 | 0.000E+00 | 1.520E-11 |
| TE-129M | 1.320E+07 | 4.900E+06 | 4.260E+06 | 5.530E+07 | 0.000E+00 | 4.960E+07 | 0.000E+00 | 2.090E+06 |
| TE-131 | 7.900E-34 | 3.260E-34 | 6.090E-34 | 3.450E-33 | 0.000E+00 | 6.480E-35 | 0.000E+00 | 2.470E-34 |
| TE-131M | 7.880E+04 | 3.780E+04 | 5.690E+04 | 3.940E+05 | 0.000E+00 | 3.030E+06 | 0.000E+00 | 3.150E+04 |
| TE-132 | 5.150E+05 | 3.260E+05 | 3.440E+05 | 3.130E+06 | 0.000E+00 | 1.030E+07 | 0.000E+00 | 3.070E+05 |
| I-130 | 8.860E+05 | 2.560E+06 | 2.090E+08 | 3.950E+06 | 0.000E+00 | 1.970E+06 | 0.000E+00 | 1.020E+06 |

# APPENDIX H

## $R_i$ Teen Dose Factors for use in the Gaseous Dose Calculations

| Agegroup: | TEEN | Pathway: | Grs/Goat/Milk (GMILK) | | | Units: | $m^2$·mrem/yr / µCi/sec; mrem/yr / µCi/$m^3$ (H-3, C-14) | |
|---|---|---|---|---|---|---|---|---|
| **Nuclide** | **Bone** | **Liver** | **Thyroid** | **Kidney** | **Lung** | **Gilli** | **Skin** | **Total Body** |
| I-131 | 6.450E+08 | 9.030E+08 | 2.630E+11 | 1.550E+09 | 0.000E+00 | 1.790E+08 | 0.000E+00 | 4.850E+08 |
| I-132 | 3.500E-01 | 9.150E-01 | 3.080E+01 | 1.440E+00 | 0.000E+00 | 3.980E-01 | 0.000E+00 | 3.280E-01 |
| I-133 | 8.480E+06 | 1.440E+07 | 2.010E+09 | 2.520E+07 | 0.000E+00 | 1.090E+07 | 0.000E+00 | 4.390E+06 |
| I-134 | 4.300E-12 | 1.140E-11 | 1.900E-10 | 1.800E-11 | 0.000E+00 | 1.500E-13 | 0.000E+00 | 4.090E-12 |
| I-135 | 2.740E+04 | 7.040E+04 | 4.530E+06 | 1.110E+05 | 0.000E+00 | 7.810E+04 | 0.000E+00 | 2.610E+04 |
| CS-134 | 2.940E+10 | 6.930E+10 | 0.000E+00 | 2.200E+10 | 8.410E+09 | 8.620E+08 | 0.000E+00 | 3.220E+10 |
| CS-136 | 1.340E+09 | 5.290E+09 | 0.000E+00 | 2.880E+09 | 4.540E+08 | 4.260E+08 | 0.000E+00 | 3.550E+09 |
| CS-137 | 4.020E+10 | 5.340E+10 | 0.000E+00 | 1.820E+10 | 7.060E+09 | 7.600E+08 | 0.000E+00 | 1.860E+10 |
| CS-138 | 4.920E-23 | 9.450E-23 | 0.000E+00 | 6.980E-23 | 8.120E-24 | 4.290E-26 | 0.000E+00 | 4.730E-23 |
| BA-139 | 9.800E-09 | 6.900E-12 | 0.000E+00 | 6.500E-12 | 4.750E-12 | 8.750E-08 | 0.000E+00 | 2.860E-10 |
| BA-140 | 5.820E+06 | 7.130E+03 | 0.000E+00 | 2.420E+03 | 4.800E+03 | 8.980E+06 | 0.000E+00 | 3.750E+05 |
| BA-141 | 9.030E-47 | 6.740E-50 | 0.000E+00 | 6.260E-50 | 4.610E-50 | 1.920E-52 | 0.000E+00 | 3.010E-48 |
| BA-142 | 5.750E-81 | 5.750E-84 | 0.000E+00 | 4.860E-84 | 3.820E-84 | 1.760E-92 | 0.000E+00 | 3.540E-82 |
| LA-140 | 9.720E-01 | 4.780E-01 | 0.000E+00 | 0.000E+00 | 0.000E+00 | 2.740E+04 | 0.000E+00 | 1.270E-01 |
| LA-142 | 4.030E-12 | 1.790E-12 | 0.000E+00 | 0.000E+00 | 0.000E+00 | 5.440E-08 | 0.000E+00 | 4.450E-13 |
| CE-141 | 1.070E+03 | 7.120E+02 | 0.000E+00 | 3.350E+02 | 0.000E+00 | 2.040E+06 | 0.000E+00 | 8.170E+01 |
| CE-143 | 9.170E+00 | 6.670E+03 | 0.000E+00 | 2.990E+00 | 0.000E+00 | 2.000E+05 | 0.000E+00 | 7.450E-01 |
| CE-144 | 7.900E+04 | 3.270E+04 | 0.000E+00 | 1.950E+04 | 0.000E+00 | 1.990E+07 | 0.000E+00 | 4.240E+03 |
| PR-143 | 3.480E+01 | 1.390E+01 | 0.000E+00 | 8.080E+00 | 0.000E+00 | 1.150E+05 | 0.000E+00 | 1.730E+00 |
| PR-144 | 1.300E-54 | 5.320E-55 | 0.000E+00 | 3.050E-55 | 0.000E+00 | 1.430E-57 | 0.000E+00 | 6.590E-56 |
| ND-147 | 2.170E+01 | 2.360E+01 | 0.000E+00 | 1.390E+01 | 0.000E+00 | 8.530E+04 | 0.000E+00 | 1.420E+00 |
| W-187 | 1.430E+03 | 1.170E+03 | 0.000E+00 | 0.000E+00 | 0.000E+00 | 3.150E+05 | 0.000E+00 | 4.080E+02 |
| NP-239 | 8.410E-01 | 7.930E-02 | 0.000E+00 | 2.490E-01 | 0.000E+00 | 1.280E+04 | 0.000E+00 | 4.410E-02 |

# APPENDIX H

## $R_i$ Teen Dose Factors for use in the Gaseous Dose Calculations

| Agegroup: | TEEN | Pathway: | Grs/Cow/Meat (CMEAT) | | | Units: | $m^2$·mrem/yr / µCi/sec; mrem/yr / µCi/$m^3$ (H-3, C-14) | |
|---|---|---|---|---|---|---|---|---|
| **Nuclide** | **Bone** | **Liver** | **Thyroid** | **Kidney** | **Lung** | **Gilli** | **Skin** | **Total Body** |
| H-3 | 0.000E+00 | 1.940E+02 | 1.940E+02 | 1.940E+02 | 1.940E+02 | 1.940E+02 | 0.000E+00 | 1.940E+02 |
| C-14 | 1.970E+04 | 3.940E+03 | 3.940E+03 | 3.940E+03 | 3.940E+03 | 3.940E+03 | 0.000E+00 | 3.940E+03 |
| NA-24 | 1.080E-03 | 1.080E-03 | 1.080E-03 | 1.080E-03 | 1.080E-03 | 1.080E-03 | 0.000E+00 | 1.080E-03 |
| P-32 | 3.930E+09 | 2.440E+08 | 0.000E+00 | 0.000E+00 | 0.000E+00 | 3.310E+08 | 0.000E+00 | 1.530E+08 |
| CR-51 | 0.000E+00 | 0.000E+00 | 3.130E+03 | 1.240E+03 | 8.050E+03 | 9.470E+05 | 0.000E+00 | 5.640E+03 |
| MN-54 | 0.000E+00 | 7.000E+06 | 0.000E+00 | 2.090E+06 | 0.000E+00 | 1.440E+07 | 0.000E+00 | 1.390E+06 |
| MN-56 | 0.000E+00 | 1.070E-53 | 0.000E+00 | 1.360E-53 | 0.000E+00 | 7.070E-52 | 0.000E+00 | 1.910E-54 |
| FE-55 | 2.380E+08 | 1.690E+08 | 0.000E+00 | 0.000E+00 | 1.070E+08 | 7.310E+07 | 0.000E+00 | 3.940E+07 |
| FE-59 | 2.120E+08 | 4.950E+08 | 0.000E+00 | 0.000E+00 | 1.560E+08 | 1.170E+09 | 0.000E+00 | 1.910E+08 |
| CO-58 | 0.000E+00 | 1.410E+07 | 0.000E+00 | 0.000E+00 | 0.000E+00 | 1.940E+08 | 0.000E+00 | 3.240E+07 |
| CO-60 | 0.000E+00 | 5.830E+07 | 0.000E+00 | 0.000E+00 | 0.000E+00 | 7.600E+08 | 0.000E+00 | 1.310E+08 |
| NI-63 | 1.520E+10 | 1.070E+09 | 0.000E+00 | 0.000E+00 | 0.000E+00 | 1.710E+08 | 0.000E+00 | 5.150E+08 |
| NI-65 | 1.880E-52 | 2.410E-53 | 0.000E+00 | 0.000E+00 | 0.000E+00 | 1.300E-51 | 0.000E+00 | 1.100E-53 |
| CU-64 | 0.000E+00 | 2.210E-07 | 0.000E+00 | 5.600E-07 | 0.000E+00 | 1.720E-05 | 0.000E+00 | 1.040E-07 |
| ZN-65 | 2.500E+08 | 8.690E+08 | 0.000E+00 | 5.560E+08 | 0.000E+00 | 3.680E+08 | 0.000E+00 | 4.050E+08 |
| ZN-69 | 0.000E+00 | 0.000E+00 | 0.000E+00 | 0.000E+00 | 0.000E+00 | 0.000E+00 | 0.000E+00 | 0.000E+00 |
| BR-83 | 0.000E+00 | 0.000E+00 | 0.000E+00 | 0.000E+00 | 0.000E+00 | 0.000E+00 | 0.000E+00 | 5.070E-57 |
| BR-84 | 0.000E+00 | 0.000E+00 | 0.000E+00 | 0.000E+00 | 0.000E+00 | 0.000E+00 | 0.000E+00 | 0.000E+00 |
| BR-85 | 0.000E+00 | 0.000E+00 | 0.000E+00 | 0.000E+00 | 0.000E+00 | 0.000E+00 | 0.000E+00 | 0.000E+00 |
| RB-86 | 0.000E+00 | 4.070E+08 | 0.000E+00 | 0.000E+00 | 0.000E+00 | 6.020E+07 | 0.000E+00 | 1.910E+08 |
| RB-88 | 0.000E+00 | 0.000E+00 | 0.000E+00 | 0.000E+00 | 0.000E+00 | 0.000E+00 | 0.000E+00 | 0.000E+00 |
| RB-89 | 0.000E+00 | 0.000E+00 | 0.000E+00 | 0.000E+00 | 0.000E+00 | 0.000E+00 | 0.000E+00 | 0.000E+00 |
| SR-89 | 2.550E+08 | 0.000E+00 | 0.000E+00 | 0.000E+00 | 0.000E+00 | 3.030E+07 | 0.000E+00 | 7.290E+06 |
| SR-90 | 8.050E+09 | 0.000E+00 | 0.000E+00 | 0.000E+00 | 0.000E+00 | 2.260E+08 | 0.000E+00 | 1.990E+09 |
| SR-91 | 1.280E-10 | 0.000E+00 | 0.000E+00 | 0.000E+00 | 0.000E+00 | 5.800E-10 | 0.000E+00 | 5.090E-12 |

# APPENDIX H

## $R_i$ Teen Dose Factors for use in the Gaseous Dose Calculations

| Agegroup: | TEEN | Pathway: | Grs/Cow/Meat (CMEAT) | | | Units: | $m^2$·mrem/yr / µCi/sec; mrem/yr / µCi/$m^3$ (H-3, C-14) | |
|---|---|---|---|---|---|---|---|---|
| **Nuclide** | **Bone** | **Liver** | **Thyroid** | **Kidney** | **Lung** | **Gilli** | **Skin** | **Total Body** |
| SR-92 | 9.880E-50 | 0.000E+00 | 0.000E+00 | 0.000E+00 | 0.000E+00 | 2.520E-48 | 0.000E+00 | 4.210E-51 |
| Y-90 | 9.060E+01 | 0.000E+00 | 0.000E+00 | 0.000E+00 | 0.000E+00 | 7.470E+05 | 0.000E+00 | 2.440E+00 |
| Y-91 | 9.540E+05 | 0.000E+00 | 0.000E+00 | 0.000E+00 | 0.000E+00 | 3.910E+08 | 0.000E+00 | 2.560E+04 |
| Y-91M | 0.000E+00 | 0.000E+00 | 0.000E+00 | 0.000E+00 | 0.000E+00 | 0.000E+00 | 0.000E+00 | 0.000E+00 |
| Y-92 | 1.280E-39 | 0.000E+00 | 0.000E+00 | 0.000E+00 | 0.000E+00 | 3.520E-35 | 0.000E+00 | 3.710E-41 |
| Y-93 | 3.960E-12 | 0.000E+00 | 0.000E+00 | 0.000E+00 | 0.000E+00 | 1.210E-07 | 0.000E+00 | 1.090E-13 |
| ZR-95 | 1.500E+06 | 4.730E+05 | 0.000E+00 | 6.950E+05 | 0.000E+00 | 1.090E+09 | 0.000E+00 | 3.250E+05 |
| ZR-97 | 1.720E-05 | 3.410E-06 | 0.000E+00 | 5.170E-06 | 0.000E+00 | 9.230E-01 | 0.000E+00 | 1.570E-06 |
| NB-95 | 1.790E+06 | 9.950E+05 | 0.000E+00 | 9.650E+05 | 0.000E+00 | 4.260E+09 | 0.000E+00 | 5.480E+05 |
| MO-99 | 0.000E+00 | 8.270E+04 | 0.000E+00 | 1.890E+05 | 0.000E+00 | 1.480E+05 | 0.000E+00 | 1.580E+04 |
| TC-99M | 3.530E-21 | 9.850E-21 | 0.000E+00 | 1.470E-19 | 5.470E-21 | 6.470E-18 | 0.000E+00 | 1.280E-19 |
| TC-101 | 0.000E+00 | 0.000E+00 | 0.000E+00 | 0.000E+00 | 0.000E+00 | 0.000E+00 | 0.000E+00 | 0.000E+00 |
| RU-103 | 8.570E+07 | 0.000E+00 | 0.000E+00 | 3.020E+08 | 0.000E+00 | 7.160E+09 | 0.000E+00 | 3.660E+07 |
| RU-105 | 4.830E-28 | 0.000E+00 | 0.000E+00 | 6.090E-27 | 0.000E+00 | 3.900E-25 | 0.000E+00 | 1.880E-28 |
| RU-106 | 2.360E+09 | 0.000E+00 | 0.000E+00 | 4.550E+09 | 0.000E+00 | 1.130E+11 | 0.000E+00 | 2.970E+08 |
| AG-110M | 5.060E+06 | 4.790E+06 | 0.000E+00 | 9.130E+06 | 0.000E+00 | 1.340E+09 | 0.000E+00 | 2.910E+06 |
| TE-125M | 3.030E+08 | 1.090E+08 | 8.470E+07 | 0.000E+00 | 0.000E+00 | 8.940E+08 | 0.000E+00 | 4.050E+07 |
| TE-127 | 1.800E-10 | 6.380E-11 | 1.240E-10 | 7.290E-10 | 0.000E+00 | 1.390E-08 | 0.000E+00 | 3.870E-11 |
| TE-127M | 9.410E+08 | 3.340E+08 | 2.240E+08 | 3.820E+09 | 0.000E+00 | 2.350E+09 | 0.000E+00 | 1.120E+08 |
| TE-129 | 0.000E+00 | 0.000E+00 | 0.000E+00 | 0.000E+00 | 0.000E+00 | 0.000E+00 | 0.000E+00 | 0.000E+00 |
| TE-129M | 9.500E+08 | 3.530E+08 | 3.070E+08 | 3.970E+09 | 0.000E+00 | 3.570E+09 | 0.000E+00 | 1.500E+08 |
| TE-131 | 0.000E+00 | 0.000E+00 | 0.000E+00 | 0.000E+00 | 0.000E+00 | 0.000E+00 | 0.000E+00 | 0.000E+00 |
| TE-131M | 3.760E+02 | 1.800E+02 | 2.710E+02 | 1.880E+03 | 0.000E+00 | 1.450E+04 | 0.000E+00 | 1.500E+02 |
| TE-132 | 1.160E+06 | 7.360E+05 | 7.750E+05 | 7.060E+06 | 0.000E+00 | 2.330E+07 | 0.000E+00 | 6.920E+05 |
| I-130 | 1.700E-06 | 4.910E-06 | 4.000E-04 | 7.560E-06 | 0.000E+00 | 3.770E-06 | 0.000E+00 | 1.960E-06 |

# APPENDIX H

## $R_i$ Teen Dose Factors for use in the Gaseous Dose Calculations

| Agegroup: | TEEN | Pathway: | Grs/Cow/Meat (CMEAT) | | | Units: | $m^2$·mrem/yr / µCi/sec; mrem/yr / µCi/$m^3$ (H-3, C-14) | |
|---|---|---|---|---|---|---|---|---|
| **Nuclide** | **Bone** | **Liver** | **Thyroid** | **Kidney** | **Lung** | **Gilli** | **Skin** | **Total Body** |
| I-131 | 8.920E+06 | 1.250E+07 | 3.650E+09 | 2.150E+07 | 0.000E+00 | 2.470E+06 | 0.000E+00 | 6.710E+06 |
| I-132 | 5.660E-59 | 1.480E-58 | 4.990E-57 | 2.330E-58 | 0.000E+00 | 6.450E-59 | 0.000E+00 | 5.320E-59 |
| I-133 | 3.050E-01 | 5.180E-01 | 7.230E+01 | 9.090E-01 | 0.000E+00 | 3.920E-01 | 0.000E+00 | 1.580E-01 |
| I-134 | 0.000E+00 | 0.000E+00 | 0.000E+00 | 0.000E+00 | 0.000E+00 | 0.000E+00 | 0.000E+00 | 0.000E+00 |
| I-135 | 3.600E-17 | 9.260E-17 | 5.960E-15 | 1.460E-16 | 0.000E+00 | 1.030E-16 | 0.000E+00 | 3.430E-17 |
| CS-134 | 5.230E+08 | 1.230E+09 | 0.000E+00 | 3.910E+08 | 1.490E+08 | 1.530E+07 | 0.000E+00 | 5.710E+08 |
| CS-136 | 9.400E+06 | 3.700E+07 | 0.000E+00 | 2.010E+07 | 3.170E+06 | 2.980E+06 | 0.000E+00 | 2.480E+07 |
| CS-137 | 7.240E+08 | 9.630E+08 | 0.000E+00 | 3.280E+08 | 1.270E+08 | 1.370E+07 | 0.000E+00 | 3.360E+08 |
| CS-138 | 0.000E+00 | 0.000E+00 | 0.000E+00 | 0.000E+00 | 0.000E+00 | 0.000E+00 | 0.000E+00 | 0.000E+00 |
| BA-139 | 0.000E+00 | 0.000E+00 | 0.000E+00 | 0.000E+00 | 0.000E+00 | 0.000E+00 | 0.000E+00 | 0.000E+00 |
| BA-140 | 2.380E+07 | 2.910E+04 | 0.000E+00 | 9.870E+03 | 1.960E+04 | 3.660E+07 | 0.000E+00 | 1.530E+06 |
| BA-141 | 0.000E+00 | 0.000E+00 | 0.000E+00 | 0.000E+00 | 0.000E+00 | 0.000E+00 | 0.000E+00 | 0.000E+00 |
| BA-142 | 0.000E+00 | 0.000E+00 | 0.000E+00 | 0.000E+00 | 0.000E+00 | 0.000E+00 | 0.000E+00 | 0.000E+00 |
| LA-140 | 3.050E-02 | 1.500E-02 | 0.000E+00 | 0.000E+00 | 0.000E+00 | 8.610E+02 | 0.000E+00 | 3.990E-03 |
| LA-142 | 2.870E-92 | 1.280E-92 | 0.000E+00 | 0.000E+00 | 0.000E+00 | 3.880E-88 | 0.000E+00 | 3.180E-93 |
| CE-141 | 1.180E+04 | 7.870E+03 | 0.000E+00 | 3.710E+03 | 0.000E+00 | 2.250E+07 | 0.000E+00 | 9.040E+02 |
| CE-143 | 1.690E-02 | 1.230E+01 | 0.000E+00 | 5.510E-03 | 0.000E+00 | 3.690E+02 | 0.000E+00 | 1.370E-03 |
| CE-144 | 1.230E+06 | 5.080E+05 | 0.000E+00 | 3.040E+05 | 0.000E+00 | 3.090E+08 | 0.000E+00 | 6.600E+04 |
| PR-143 | 1.760E+04 | 7.040E+03 | 0.000E+00 | 4.090E+03 | 0.000E+00 | 5.800E+07 | 0.000E+00 | 8.780E+02 |
| PR-144 | 0.000E+00 | 0.000E+00 | 0.000E+00 | 0.000E+00 | 0.000E+00 | 0.000E+00 | 0.000E+00 | 0.000E+00 |
| ND-147 | 6.230E+03 | 6.770E+03 | 0.000E+00 | 3.980E+03 | 0.000E+00 | 2.440E+07 | 0.000E+00 | 4.060E+02 |
| W-187 | 1.730E-02 | 1.410E-02 | 0.000E+00 | 0.000E+00 | 0.000E+00 | 3.820E+00 | 0.000E+00 | 4.940E-03 |
| NP-239 | 2.260E-01 | 2.140E-02 | 0.000E+00 | 6.700E-02 | 0.000E+00 | 3.440E+03 | 0.000E+00 | 1.190E-02 |

# APPENDIX H

## $R_i$ Teen Dose Factors for use in the Gaseous Dose Calculations

| Agegroup: | TEEN | Pathway: | Vegetation (VEG) | | | Units: | $m^2$·mrem/yr / µCi/sec; mrem/yr / µCi/$m^3$ (H-3, C-14) | |
|---|---|---|---|---|---|---|---|---|
| Nuclide | Bone | Liver | Thyroid | Kidney | Lung | Gilli | Skin | Total Body |
| H-3 | 0.000E+00 | 2.590E+03 | 2.590E+03 | 2.590E+03 | 2.590E+03 | 2.590E+03 | 0.000E+00 | 2.590E+03 |
| C-14 | 1.020E+05 | 2.040E+04 | 2.040E+04 | 2.040E+04 | 2.040E+04 | 2.040E+04 | 0.000E+00 | 2.040E+04 |
| NA-24 | 2.390E+05 | 2.390E+05 | 2.390E+05 | 2.390E+05 | 2.390E+05 | 2.390E+05 | 0.000E+00 | 2.390E+05 |
| P-32 | 1.610E+09 | 9.970E+07 | 0.000E+00 | 0.000E+00 | 0.000E+00 | 1.350E+08 | 0.000E+00 | 6.240E+07 |
| CR-51 | 0.000E+00 | 0.000E+00 | 3.430E+04 | 1.350E+04 | 8.810E+04 | 1.040E+07 | 0.000E+00 | 6.170E+04 |
| MN-54 | 0.000E+00 | 4.540E+08 | 0.000E+00 | 1.360E+08 | 0.000E+00 | 9.320E+08 | 0.000E+00 | 9.010E+07 |
| MN-56 | 0.000E+00 | 1.420E+01 | 0.000E+00 | 1.800E+01 | 0.000E+00 | 9.360E+02 | 0.000E+00 | 2.530E+00 |
| FE-55 | 3.260E+08 | 2.310E+08 | 0.000E+00 | 0.000E+00 | 1.470E+08 | 1.000E+08 | 0.000E+00 | 5.390E+07 |
| FE-59 | 1.790E+08 | 4.190E+08 | 0.000E+00 | 0.000E+00 | 1.320E+08 | 9.900E+08 | 0.000E+00 | 1.620E+08 |
| CO-58 | 0.000E+00 | 4.360E+07 | 0.000E+00 | 0.000E+00 | 0.000E+00 | 6.010E+08 | 0.000E+00 | 1.000E+08 |
| CO-60 | 0.000E+00 | 2.490E+08 | 0.000E+00 | 0.000E+00 | 0.000E+00 | 3.240E+09 | 0.000E+00 | 5.600E+08 |
| NI-63 | 1.610E+10 | 1.130E+09 | 0.000E+00 | 0.000E+00 | 0.000E+00 | 1.810E+08 | 0.000E+00 | 5.450E+08 |
| NI-65 | 5.720E+01 | 7.310E+00 | 0.000E+00 | 0.000E+00 | 0.000E+00 | 3.970E+02 | 0.000E+00 | 3.330E+00 |
| CU-64 | 0.000E+00 | 8.340E+03 | 0.000E+00 | 2.110E+04 | 0.000E+00 | 6.470E+05 | 0.000E+00 | 3.920E+03 |
| ZN-65 | 4.240E+08 | 1.470E+09 | 0.000E+00 | 9.420E+08 | 0.000E+00 | 6.230E+08 | 0.000E+00 | 6.870E+08 |
| ZN-69 | 5.140E-06 | 9.800E-06 | 0.000E+00 | 6.400E-06 | 0.000E+00 | 1.810E-05 | 0.000E+00 | 6.860E-07 |
| BR-83 | 0.000E+00 | 0.000E+00 | 0.000E+00 | 0.000E+00 | 0.000E+00 | 0.000E+00 | 0.000E+00 | 2.910E+00 |
| BR-84 | 0.000E+00 | 0.000E+00 | 0.000E+00 | 0.000E+00 | 0.000E+00 | 0.000E+00 | 0.000E+00 | 2.250E-11 |
| BR-85 | 0.000E+00 | 0.000E+00 | 0.000E+00 | 0.000E+00 | 0.000E+00 | 0.000E+00 | 0.000E+00 | 0.000E+00 |
| RB-86 | 0.000E+00 | 2.740E+08 | 0.000E+00 | 0.000E+00 | 0.000E+00 | 4.050E+07 | 0.000E+00 | 1.290E+08 |
| RB-88 | 0.000E+00 | 3.170E-22 | 0.000E+00 | 0.000E+00 | 0.000E+00 | 2.720E-29 | 0.000E+00 | 1.690E-22 |
| RB-89 | 0.000E+00 | 3.500E-26 | 0.000E+00 | 0.000E+00 | 0.000E+00 | 5.360E-35 | 0.000E+00 | 2.470E-26 |
| SR-89 | 1.510E+10 | 0.000E+00 | 0.000E+00 | 0.000E+00 | 0.000E+00 | 1.800E+09 | 0.000E+00 | 4.340E+08 |
| SR-90 | 7.510E+11 | 0.000E+00 | 0.000E+00 | 0.000E+00 | 0.000E+00 | 2.110E+10 | 0.000E+00 | 1.850E+11 |
| SR-91 | 2.850E+05 | 0.000E+00 | 0.000E+00 | 0.000E+00 | 0.000E+00 | 1.290E+06 | 0.000E+00 | 1.130E+04 |

# APPENDIX H

## $R_i$ Teen Dose Factors for use in the Gaseous Dose Calculations

| Agegroup: | TEEN | Pathway: | Vegetation (VEG) | | | Units: | $m^2$·mrem/yr / µCi/sec; mrem/yr / µCi/$m^3$ (H-3, C-14) | |
|---|---|---|---|---|---|---|---|---|
| Nuclide | Bone | Liver | Thyroid | Kidney | Lung | Gilli | Skin | Total Body |
| SR-92 | 3.970E+02 | 0.000E+00 | 0.000E+00 | 0.000E+00 | 0.000E+00 | 1.010E+04 | 0.000E+00 | 1.690E+01 |
| Y-90 | 1.240E+04 | 0.000E+00 | 0.000E+00 | 0.000E+00 | 0.000E+00 | 1.020E+08 | 0.000E+00 | 3.350E+02 |
| Y-91 | 7.840E+06 | 0.000E+00 | 0.000E+00 | 0.000E+00 | 0.000E+00 | 3.210E+09 | 0.000E+00 | 2.100E+05 |
| Y-91M | 4.860E-09 | 0.000E+00 | 0.000E+00 | 0.000E+00 | 0.000E+00 | 2.290E-07 | 0.000E+00 | 1.860E-10 |
| Y-92 | 8.600E-01 | 0.000E+00 | 0.000E+00 | 0.000E+00 | 0.000E+00 | 2.360E+04 | 0.000E+00 | 2.490E-02 |
| Y-93 | 1.590E+02 | 0.000E+00 | 0.000E+00 | 0.000E+00 | 0.000E+00 | 4.860E+06 | 0.000E+00 | 4.360E+00 |
| ZR-95 | 1.720E+06 | 5.430E+05 | 0.000E+00 | 7.980E+05 | 0.000E+00 | 1.250E+09 | 0.000E+00 | 3.730E+05 |
| ZR-97 | 3.120E+02 | 6.180E+01 | 0.000E+00 | 9.370E+01 | 0.000E+00 | 1.670E+07 | 0.000E+00 | 2.850E+01 |
| NB-95 | 1.920E+05 | 1.070E+05 | 0.000E+00 | 1.030E+05 | 0.000E+00 | 4.560E+08 | 0.000E+00 | 5.870E+04 |
| MO-99 | 0.000E+00 | 5.650E+06 | 0.000E+00 | 1.290E+07 | 0.000E+00 | 1.010E+07 | 0.000E+00 | 1.080E+06 |
| TC-99M | 2.740E+00 | 7.630E+00 | 0.000E+00 | 1.140E+02 | 4.240E+00 | 5.010E+03 | 0.000E+00 | 9.890E+01 |
| TC-101 | 7.640E-31 | 1.090E-30 | 0.000E+00 | 1.970E-29 | 6.620E-31 | 1.860E-37 | 0.000E+00 | 1.070E-29 |
| RU-103 | 6.820E+06 | 0.000E+00 | 0.000E+00 | 2.400E+07 | 0.000E+00 | 5.700E+08 | 0.000E+00 | 2.920E+06 |
| RU-105 | 5.000E+01 | 0.000E+00 | 0.000E+00 | 6.310E+02 | 0.000E+00 | 4.040E+04 | 0.000E+00 | 1.940E+01 |
| RU-106 | 3.100E+08 | 0.000E+00 | 0.000E+00 | 5.970E+08 | 0.000E+00 | 1.480E+10 | 0.000E+00 | 3.900E+07 |
| AG-110M | 1.520E+07 | 1.430E+07 | 0.000E+00 | 2.740E+07 | 0.000E+00 | 4.030E+09 | 0.000E+00 | 8.720E+06 |
| TE-125M | 1.480E+08 | 5.340E+07 | 4.140E+07 | 0.000E+00 | 0.000E+00 | 4.370E+08 | 0.000E+00 | 1.980E+07 |
| TE-127 | 5.330E+03 | 1.890E+03 | 3.680E+03 | 2.160E+04 | 0.000E+00 | 4.120E+05 | 0.000E+00 | 1.150E+03 |
| TE-127M | 5.510E+08 | 1.960E+08 | 1.310E+08 | 2.240E+09 | 0.000E+00 | 1.370E+09 | 0.000E+00 | 6.560E+07 |
| TE-129 | 7.140E-04 | 2.660E-04 | 5.100E-04 | 3.000E-03 | 0.000E+00 | 3.910E-03 | 0.000E+00 | 1.740E-04 |
| TE-129M | 3.620E+08 | 1.340E+08 | 1.170E+08 | 1.510E+09 | 0.000E+00 | 1.360E+09 | 0.000E+00 | 5.730E+07 |
| TE-131 | 1.390E-15 | 5.750E-16 | 1.070E-15 | 6.100E-15 | 0.000E+00 | 1.140E-16 | 0.000E+00 | 4.360E-16 |
| TE-131M | 8.440E+05 | 4.050E+05 | 6.090E+05 | 4.220E+06 | 0.000E+00 | 3.250E+07 | 0.000E+00 | 3.380E+05 |
| TE-132 | 3.910E+06 | 2.470E+06 | 2.610E+06 | 2.370E+07 | 0.000E+00 | 7.840E+07 | 0.000E+00 | 2.330E+06 |
| I-130 | 3.510E+05 | 1.010E+06 | 8.280E+07 | 1.560E+06 | 0.000E+00 | 7.800E+05 | 0.000E+00 | 4.050E+05 |

# APPENDIX H

## $R_i$ Teen Dose Factors for use in the Gaseous Dose Calculations

| Agegroup: | TEEN | Pathway: | Vegetation (VEG) | | | Units: | $m^2$·mrem/yr / µCi/sec; mrem/yr / µCi/$m^3$ (H-3, C-14) | |
|---|---|---|---|---|---|---|---|---|
| Nuclide | Bone | Liver | Thyroid | Kidney | Lung | Gilli | Skin | Total Body |
| I-131 | 7.690E+07 | 1.080E+08 | 3.140E+10 | 1.850E+08 | 0.000E+00 | 2.130E+07 | 0.000E+00 | 5.780E+07 |
| I-132 | 5.190E+01 | 1.360E+02 | 4.580E+03 | 2.140E+02 | 0.000E+00 | 5.920E+01 | 0.000E+00 | 4.880E+01 |
| I-133 | 1.940E+06 | 3.290E+06 | 4.590E+08 | 5.760E+06 | 0.000E+00 | 2.490E+06 | 0.000E+00 | 1.000E+06 |
| I-134 | 8.720E-05 | 2.310E-04 | 3.850E-03 | 3.640E-04 | 0.000E+00 | 3.050E-06 | 0.000E+00 | 8.310E-05 |
| I-135 | 3.520E+04 | 9.070E+04 | 5.830E+06 | 1.430E+05 | 0.000E+00 | 1.000E+05 | 0.000E+00 | 3.360E+04 |
| CS-134 | 7.100E+09 | 1.670E+10 | 0.000E+00 | 5.310E+09 | 2.030E+09 | 2.080E+08 | 0.000E+00 | 7.750E+09 |
| CS-136 | 4.370E+07 | 1.720E+08 | 0.000E+00 | 9.370E+07 | 1.480E+07 | 1.380E+07 | 0.000E+00 | 1.160E+08 |
| CS-137 | 1.010E+10 | 1.350E+10 | 0.000E+00 | 4.590E+09 | 1.780E+09 | 1.920E+08 | 0.000E+00 | 4.690E+09 |
| CS-138 | 3.610E-11 | 6.940E-11 | 0.000E+00 | 5.120E-11 | 5.960E-12 | 3.150E-14 | 0.000E+00 | 3.470E-11 |
| BA-139 | 2.690E-02 | 1.890E-05 | 0.000E+00 | 1.780E-05 | 1.300E-05 | 2.400E-01 | 0.000E+00 | 7.830E-04 |
| BA-140 | 1.380E+08 | 1.690E+05 | 0.000E+00 | 5.740E+04 | 1.140E+05 | 2.130E+08 | 0.000E+00 | 8.900E+06 |
| BA-141 | 1.080E-21 | 8.040E-25 | 0.000E+00 | 7.460E-25 | 5.500E-25 | 2.290E-27 | 0.000E+00 | 3.590E-23 |
| BA-142 | 5.490E-39 | 5.490E-42 | 0.000E+00 | 4.640E-42 | 3.650E-42 | 1.680E-50 | 0.000E+00 | 3.380E-40 |
| LA-140 | 1.810E+03 | 8.880E+02 | 0.000E+00 | 0.000E+00 | 0.000E+00 | 5.100E+07 | 0.000E+00 | 2.360E+02 |
| LA-142 | 1.850E-04 | 8.240E-05 | 0.000E+00 | 0.000E+00 | 0.000E+00 | 2.510E+00 | 0.000E+00 | 2.050E-05 |
| CE-141 | 2.830E+05 | 1.890E+05 | 0.000E+00 | 8.890E+04 | 0.000E+00 | 5.400E+08 | 0.000E+00 | 2.170E+04 |
| CE-143 | 9.330E+02 | 6.790E+05 | 0.000E+00 | 3.040E+02 | 0.000E+00 | 2.040E+07 | 0.000E+00 | 7.580E+01 |
| CE-144 | 5.270E+07 | 2.180E+07 | 0.000E+00 | 1.300E+07 | 0.000E+00 | 1.330E+10 | 0.000E+00 | 2.830E+06 |
| PR-143 | 7.000E+04 | 2.800E+04 | 0.000E+00 | 1.630E+04 | 0.000E+00 | 2.300E+08 | 0.000E+00 | 3.490E+03 |
| PR-144 | 2.900E-26 | 1.190E-26 | 0.000E+00 | 6.800E-27 | 0.000E+00 | 3.190E-29 | 0.000E+00 | 1.470E-27 |
| ND-147 | 3.620E+04 | 3.940E+04 | 0.000E+00 | 2.310E+04 | 0.000E+00 | 1.420E+08 | 0.000E+00 | 2.360E+03 |
| W-187 | 3.540E+04 | 2.880E+04 | 0.000E+00 | 0.000E+00 | 0.000E+00 | 7.800E+06 | 0.000E+00 | 1.010E+04 |
| NP-239 | 1.390E+03 | 1.310E+02 | 0.000E+00 | 4.100E+02 | 0.000E+00 | 2.100E+07 | 0.000E+00 | 7.260E+01 |

# APPENDIX H

## $R_i$ Teen Dose Factors for use in the Gaseous Dose Calculations

| Agegroup: | TEEN | Pathway: | Inhalation (INHL) | | | Units: | mrem/yr / µCi/m$^3$ | |
|---|---|---|---|---|---|---|---|---|
| **Nuclide** | **Bone** | **Liver** | **Thyroid** | **Kidney** | **Lung** | **Gilli** | **Skin** | **Total Body** |
| H-3 | 0.000E+00 | 1.270E+03 | 1.270E+03 | 1.270E+03 | 1.270E+03 | 1.270E+03 | 0.000E+00 | 1.270E+03 |
| C-14 | 2.600E+04 | 4.870E+03 | 4.870E+03 | 4.870E+03 | 4.870E+03 | 4.870E+03 | 0.000E+00 | 4.870E+03 |
| NA-24 | 1.380E+04 | 1.380E+04 | 1.380E+04 | 1.380E+04 | 1.380E+04 | 1.380E+04 | 0.000E+00 | 1.380E+04 |
| P-32 | 1.890E+06 | 1.100E+05 | 0.000E+00 | 0.000E+00 | 0.000E+00 | 9.280E+04 | 0.000E+00 | 7.160E+04 |
| CR-51 | 0.000E+00 | 0.000E+00 | 7.500E+01 | 3.070E+01 | 2.100E+04 | 3.000E+03 | 0.000E+00 | 1.350E+02 |
| MN-54 | 0.000E+00 | 5.110E+04 | 0.000E+00 | 1.270E+04 | 1.980E+06 | 6.680E+04 | 0.000E+00 | 8.400E+03 |
| MN-56 | 0.000E+00 | 1.700E+00 | 0.000E+00 | 1.790E+00 | 1.520E+04 | 5.740E+04 | 0.000E+00 | 2.520E-01 |
| FE-55 | 3.340E+04 | 2.380E+04 | 0.000E+00 | 0.000E+00 | 1.240E+05 | 6.390E+03 | 0.000E+00 | 5.540E+03 |
| FE-59 | 1.590E+04 | 3.700E+04 | 0.000E+00 | 0.000E+00 | 1.530E+06 | 1.780E+05 | 0.000E+00 | 1.430E+04 |
| CO-58 | 0.000E+00 | 2.070E+03 | 0.000E+00 | 0.000E+00 | 1.340E+06 | 9.520E+04 | 0.000E+00 | 2.780E+03 |
| CO-60 | 0.000E+00 | 1.510E+04 | 0.000E+00 | 0.000E+00 | 8.720E+06 | 2.590E+05 | 0.000E+00 | 1.980E+04 |
| NI-63 | 5.800E+05 | 4.340E+04 | 0.000E+00 | 0.000E+00 | 3.070E+05 | 1.420E+04 | 0.000E+00 | 1.980E+04 |
| NI-65 | 2.180E+00 | 2.930E-01 | 0.000E+00 | 0.000E+00 | 9.360E+03 | 3.670E+04 | 0.000E+00 | 1.270E-01 |
| CU-64 | 0.000E+00 | 2.030E+00 | 0.000E+00 | 6.410E+00 | 1.110E+04 | 6.140E+04 | 0.000E+00 | 8.480E-01 |
| ZN-65 | 3.860E+04 | 1.340E+05 | 0.000E+00 | 8.640E+04 | 1.240E+06 | 4.660E+04 | 0.000E+00 | 6.240E+04 |
| ZN-69 | 4.830E-02 | 9.200E-02 | 0.000E+00 | 6.020E-02 | 1.580E+03 | 2.850E+02 | 0.000E+00 | 6.460E-03 |
| BR-83 | 0.000E+00 | 0.000E+00 | 0.000E+00 | 0.000E+00 | 0.000E+00 | 0.000E+00 | 0.000E+00 | 3.440E+02 |
| BR-84 | 0.000E+00 | 0.000E+00 | 0.000E+00 | 0.000E+00 | 0.000E+00 | 0.000E+00 | 0.000E+00 | 4.330E+02 |
| BR-85 | 0.000E+00 | 0.000E+00 | 0.000E+00 | 0.000E+00 | 0.000E+00 | 0.000E+00 | 0.000E+00 | 1.830E+01 |
| RB-86 | 0.000E+00 | 1.900E+05 | 0.000E+00 | 0.000E+00 | 0.000E+00 | 1.770E+04 | 0.000E+00 | 8.400E+04 |
| RB-88 | 0.000E+00 | 5.460E+02 | 0.000E+00 | 0.000E+00 | 0.000E+00 | 2.920E-05 | 0.000E+00 | 2.720E+02 |
| RB-89 | 0.000E+00 | 3.520E+02 | 0.000E+00 | 0.000E+00 | 0.000E+00 | 3.380E-07 | 0.000E+00 | 2.330E+02 |
| SR-89 | 4.340E+05 | 0.000E+00 | 0.000E+00 | 0.000E+00 | 2.420E+06 | 3.710E+05 | 0.000E+00 | 1.250E+04 |
| SR-90 | 1.080E+08 | 0.000E+00 | 0.000E+00 | 0.000E+00 | 1.650E+07 | 7.650E+05 | 0.000E+00 | 6.680E+06 |
| SR-91 | 8.800E+01 | 0.000E+00 | 0.000E+00 | 0.000E+00 | 6.070E+04 | 2.590E+05 | 0.000E+00 | 3.510E+00 |

# APPENDIX H

## $R_i$ Teen Dose Factors for use in the Gaseous Dose Calculations

| Agegroup: | TEEN | Pathway: | Inhalation (INHL) | | | Units: | mrem/yr / µCi/m$^3$ | |
|---|---|---|---|---|---|---|---|---|
| **Nuclide** | **Bone** | **Liver** | **Thyroid** | **Kidney** | **Lung** | **Gilli** | **Skin** | **Total Body** |
| SR-92 | 9.520E+00 | 0.000E+00 | 0.000E+00 | 0.000E+00 | 2.740E+04 | 1.190E+05 | 0.000E+00 | 4.060E-01 |
| Y-90 | 2.980E+03 | 0.000E+00 | 0.000E+00 | 0.000E+00 | 2.930E+05 | 5.590E+05 | 0.000E+00 | 8.000E+01 |
| Y-91 | 6.610E+05 | 0.000E+00 | 0.000E+00 | 0.000E+00 | 2.940E+06 | 4.090E+05 | 0.000E+00 | 1.770E+04 |
| Y-91M | 3.700E-01 | 0.000E+00 | 0.000E+00 | 0.000E+00 | 3.200E+03 | 3.020E+01 | 0.000E+00 | 1.420E-02 |
| Y-92 | 1.470E+01 | 0.000E+00 | 0.000E+00 | 0.000E+00 | 2.680E+04 | 1.650E+05 | 0.000E+00 | 4.290E-01 |
| Y-93 | 1.350E+02 | 0.000E+00 | 0.000E+00 | 0.000E+00 | 8.320E+04 | 5.790E+05 | 0.000E+00 | 3.720E+00 |
| ZR-95 | 1.460E+05 | 4.580E+04 | 0.000E+00 | 6.740E+04 | 2.690E+06 | 1.490E+05 | 0.000E+00 | 3.150E+04 |
| ZR-97 | 1.380E+02 | 2.720E+01 | 0.000E+00 | 4.120E+01 | 1.300E+05 | 6.300E+05 | 0.000E+00 | 1.260E+01 |
| NB-95 | 1.860E+04 | 1.030E+04 | 0.000E+00 | 1.000E+04 | 7.510E+05 | 9.680E+04 | 0.000E+00 | 5.660E+03 |
| MO-99 | 0.000E+00 | 1.690E+02 | 0.000E+00 | 4.110E+02 | 1.540E+05 | 2.690E+05 | 0.000E+00 | 3.220E+01 |
| TC-99M | 1.380E-03 | 3.860E-03 | 0.000E+00 | 5.760E-02 | 1.150E+03 | 6.130E+03 | 0.000E+00 | 4.990E-02 |
| TC-101 | 5.920E-05 | 8.400E-05 | 0.000E+00 | 1.520E-03 | 6.670E+02 | 8.720E-07 | 0.000E+00 | 8.240E-04 |
| RU-103 | 2.100E+03 | 0.000E+00 | 0.000E+00 | 7.430E+03 | 7.830E+05 | 1.090E+05 | 0.000E+00 | 8.960E+02 |
| RU-105 | 1.120E+00 | 0.000E+00 | 0.000E+00 | 1.410E+00 | 1.820E+04 | 9.040E+04 | 0.000E+00 | 4.340E-01 |
| RU-106 | 9.840E+04 | 0.000E+00 | 0.000E+00 | 1.900E+05 | 1.610E+07 | 9.600E+05 | 0.000E+00 | 1.240E+04 |
| AG-110M | 1.380E+04 | 1.310E+04 | 0.000E+00 | 2.500E+04 | 6.750E+06 | 2.730E+05 | 0.000E+00 | 7.990E+03 |
| TE-125M | 4.880E+03 | 2.240E+03 | 1.400E+03 | 0.000E+00 | 5.360E+05 | 7.500E+04 | 0.000E+00 | 6.670E+02 |
| TE-127 | 2.010E+00 | 9.120E-01 | 1.420E+00 | 7.280E+00 | 1.120E+04 | 8.080E+04 | 0.000E+00 | 4.420E-01 |
| TE-127M | 1.800E+04 | 8.160E+03 | 4.380E+03 | 6.540E+04 | 1.660E+06 | 1.590E+05 | 0.000E+00 | 2.180E+03 |
| TE-129 | 7.100E-02 | 3.380E-02 | 5.180E-02 | 2.660E-01 | 3.300E+03 | 1.620E+03 | 0.000E+00 | 1.760E-02 |
| TE-129M | 1.390E+04 | 6.580E+03 | 4.580E+03 | 5.190E+04 | 1.980E+06 | 4.050E+05 | 0.000E+00 | 2.250E+03 |
| TE-131 | 1.580E-02 | 8.320E-03 | 1.240E-02 | 6.180E-02 | 2.340E+03 | 1.510E+01 | 0.000E+00 | 5.040E-03 |
| TE-131M | 9.840E+01 | 6.010E+01 | 7.250E+01 | 4.390E+02 | 2.380E+05 | 6.210E+05 | 0.000E+00 | 4.020E+01 |
| TE-132 | 3.600E+02 | 2.900E+02 | 2.460E+02 | 1.950E+03 | 4.490E+05 | 4.630E+05 | 0.000E+00 | 2.190E+02 |
| I-130 | 6.240E+03 | 1.790E+04 | 1.490E+06 | 2.750E+04 | 0.000E+00 | 9.120E+03 | 0.000E+00 | 7.170E+03 |

# APPENDIX H

## $R_i$ Teen Dose Factors for use in the Gaseous Dose Calculations

| Agegroup: | TEEN | Pathway: | Inhalation (INHL) | | | Units: | mrem/yr / µCi/m$^3$ | |
|---|---|---|---|---|---|---|---|---|
| **Nuclide** | **Bone** | **Liver** | **Thyroid** | **Kidney** | **Lung** | **Gilli** | **Skin** | **Total Body** |
| I-131 | 3.540E+04 | 4.910E+04 | 1.460E+07 | 8.400E+04 | 0.000E+00 | 6.490E+03 | 0.000E+00 | 2.640E+04 |
| I-132 | 1.590E+03 | 4.380E+03 | 1.510E+05 | 6.920E+03 | 0.000E+00 | 1.270E+03 | 0.000E+00 | 1.580E+03 |
| I-133 | 1.220E+04 | 2.050E+04 | 2.920E+06 | 3.590E+04 | 0.000E+00 | 1.030E+04 | 0.000E+00 | 6.220E+03 |
| I-134 | 8.880E+02 | 2.320E+03 | 3.950E+04 | 3.660E+03 | 0.000E+00 | 2.040E+01 | 0.000E+00 | 8.400E+02 |
| I-135 | 3.700E+03 | 9.440E+03 | 6.210E+05 | 1.490E+04 | 0.000E+00 | 6.950E+03 | 0.000E+00 | 3.490E+03 |
| CS-134 | 5.020E+05 | 1.130E+06 | 0.000E+00 | 3.750E+05 | 1.460E+05 | 9.760E+03 | 0.000E+00 | 5.490E+05 |
| CS-136 | 5.150E+04 | 1.940E+05 | 0.000E+00 | 1.100E+05 | 1.780E+04 | 1.090E+04 | 0.000E+00 | 1.370E+05 |
| CS-137 | 6.700E+05 | 8.480E+05 | 0.000E+00 | 3.040E+05 | 1.210E+05 | 8.480E+03 | 0.000E+00 | 3.110E+05 |
| CS-138 | 4.660E+02 | 8.560E+02 | 0.000E+00 | 6.620E+02 | 7.870E+01 | 2.700E-01 | 0.000E+00 | 4.460E+02 |
| BA-139 | 1.340E+00 | 9.440E-04 | 0.000E+00 | 8.880E-04 | 6.460E+03 | 6.450E+03 | 0.000E+00 | 3.900E-02 |
| BA-140 | 5.470E+04 | 6.700E+01 | 0.000E+00 | 2.280E+01 | 2.030E+06 | 2.290E+05 | 0.000E+00 | 3.520E+03 |
| BA-141 | 1.420E-01 | 1.060E-04 | 0.000E+00 | 9.840E-05 | 3.290E+03 | 7.460E-04 | 0.000E+00 | 4.740E-03 |
| BA-142 | 3.700E-02 | 3.700E-05 | 0.000E+00 | 3.140E-05 | 1.910E+03 | 4.790E-10 | 0.000E+00 | 2.270E-03 |
| LA-140 | 4.790E+02 | 2.360E+02 | 0.000E+00 | 0.000E+00 | 2.140E+05 | 4.870E+05 | 0.000E+00 | 6.260E+01 |
| LA-142 | 9.600E-01 | 4.250E-01 | 0.000E+00 | 0.000E+00 | 1.020E+04 | 1.200E+04 | 0.000E+00 | 1.060E-01 |
| CE-141 | 2.840E+04 | 1.900E+04 | 0.000E+00 | 8.880E+03 | 6.140E+05 | 1.260E+05 | 0.000E+00 | 2.170E+03 |
| CE-143 | 2.660E+02 | 1.940E+02 | 0.000E+00 | 8.640E+01 | 1.300E+05 | 2.550E+05 | 0.000E+00 | 2.160E+01 |
| CE-144 | 4.890E+06 | 2.020E+06 | 0.000E+00 | 1.210E+06 | 1.340E+07 | 8.640E+05 | 0.000E+00 | 2.620E+05 |
| PR-143 | 1.340E+04 | 5.310E+03 | 0.000E+00 | 3.090E+03 | 4.830E+05 | 2.140E+05 | 0.000E+00 | 6.620E+02 |
| PR-144 | 4.300E-02 | 1.760E-02 | 0.000E+00 | 1.010E-02 | 1.750E+03 | 2.350E-04 | 0.000E+00 | 2.180E-03 |
| ND-147 | 7.860E+03 | 8.560E+03 | 0.000E+00 | 5.020E+03 | 3.720E+05 | 1.820E+05 | 0.000E+00 | 5.130E+02 |
| W-187 | 1.200E+01 | 9.760E+00 | 0.000E+00 | 0.000E+00 | 4.740E+04 | 1.770E+05 | 0.000E+00 | 3.430E+00 |
| NP-239 | 3.380E+02 | 3.190E+01 | 0.000E+00 | 1.000E+02 | 6.490E+04 | 1.320E+05 | 0.000E+00 | 1.770E+01 |

# APPENDIX H

## $R_i$ Teen Dose Factors for use in the Gaseous Dose Calculations

| Agegroup: | TEEN | Pathway: | Ground Plane Deposition (GPD) | | | Units: | $m^2$·mrem/yr / µCi/sec | |
|---|---|---|---|---|---|---|---|---|
| **Nuclide** | **Bone** | **Liver** | **Thyroid** | **Kidney** | **Lung** | **Gilli** | **Skin** | **Total Body** |
| H-3 | 0.000E+00 | 0.000E+00 | 0.000E+00 | 0.000E+00 | 0.000E+00 | 0.000E+00 | 0.000E+00 | 0.000E+00 |
| C-14 | 0.000E+00 | 0.000E+00 | 0.000E+00 | 0.000E+00 | 0.000E+00 | 0.000E+00 | 0.000E+00 | 0.000E+00 |
| NA-24 | 1.190E+07 | 1.190E+07 | 1.190E+07 | 1.190E+07 | 1.190E+07 | 1.190E+07 | 1.390E+07 | 1.190E+07 |
| P-32 | 0.000E+00 | 0.000E+00 | 0.000E+00 | 0.000E+00 | 0.000E+00 | 0.000E+00 | 0.000E+00 | 0.000E+00 |
| CR-51 | 4.660E+06 | 4.660E+06 | 4.660E+06 | 4.660E+06 | 4.660E+06 | 4.660E+06 | 5.510E+06 | 4.660E+06 |
| MN-54 | 1.390E+09 | 1.390E+09 | 1.390E+09 | 1.390E+09 | 1.390E+09 | 1.390E+09 | 1.630E+09 | 1.390E+09 |
| MN-56 | 9.020E+05 | 9.020E+05 | 9.020E+05 | 9.020E+05 | 9.020E+05 | 9.020E+05 | 1.070E+06 | 9.020E+05 |
| FE-55 | 0.000E+00 | 0.000E+00 | 0.000E+00 | 0.000E+00 | 0.000E+00 | 0.000E+00 | 0.000E+00 | 0.000E+00 |
| FE-59 | 2.730E+08 | 2.730E+08 | 2.730E+08 | 2.730E+08 | 2.730E+08 | 2.730E+08 | 3.210E+08 | 2.730E+08 |
| CO-58 | 3.790E+08 | 3.790E+08 | 3.790E+08 | 3.790E+08 | 3.790E+08 | 3.790E+08 | 4.440E+08 | 3.790E+08 |
| CO-60 | 2.150E+10 | 2.150E+10 | 2.150E+10 | 2.150E+10 | 2.150E+10 | 2.150E+10 | 2.530E+10 | 2.150E+10 |
| NI-63 | 0.000E+00 | 0.000E+00 | 0.000E+00 | 0.000E+00 | 0.000E+00 | 0.000E+00 | 0.000E+00 | 0.000E+00 |
| NI-65 | 2.970E+05 | 2.970E+05 | 2.970E+05 | 2.970E+05 | 2.970E+05 | 2.970E+05 | 3.450E+05 | 2.970E+05 |
| CU-64 | 6.070E+05 | 6.070E+05 | 6.070E+05 | 6.070E+05 | 6.070E+05 | 6.070E+05 | 6.880E+05 | 6.070E+05 |
| ZN-65 | 7.470E+08 | 7.470E+08 | 7.470E+08 | 7.470E+08 | 7.470E+08 | 7.470E+08 | 8.590E+08 | 7.470E+08 |
| ZN-69 | 0.000E+00 | 0.000E+00 | 0.000E+00 | 0.000E+00 | 0.000E+00 | 0.000E+00 | 0.000E+00 | 0.000E+00 |
| BR-83 | 4.870E+03 | 4.870E+03 | 4.870E+03 | 4.870E+03 | 4.870E+03 | 4.870E+03 | 7.080E+03 | 4.870E+03 |
| BR-84 | 2.030E+05 | 2.030E+05 | 2.030E+05 | 2.030E+05 | 2.030E+05 | 2.030E+05 | 2.360E+05 | 2.030E+05 |
| BR-85 | 0.000E+00 | 0.000E+00 | 0.000E+00 | 0.000E+00 | 0.000E+00 | 0.000E+00 | 0.000E+00 | 0.000E+00 |
| RB-86 | 8.990E+06 | 8.990E+06 | 8.990E+06 | 8.990E+06 | 8.990E+06 | 8.990E+06 | 1.030E+07 | 8.990E+06 |
| RB-88 | 3.310E+04 | 3.310E+04 | 3.310E+04 | 3.310E+04 | 3.310E+04 | 3.310E+04 | 3.780E+04 | 3.310E+04 |
| RB-89 | 1.230E+05 | 1.230E+05 | 1.230E+05 | 1.230E+05 | 1.230E+05 | 1.230E+05 | 1.480E+05 | 1.230E+05 |
| SR-89 | 2.160E+04 | 2.160E+04 | 2.160E+04 | 2.160E+04 | 2.160E+04 | 2.160E+04 | 2.510E+04 | 2.160E+04 |
| SR-90 | 0.000E+00 | 0.000E+00 | 0.000E+00 | 0.000E+00 | 0.000E+00 | 0.000E+00 | 0.000E+00 | 0.000E+00 |
| SR-91 | 2.150E+06 | 2.150E+06 | 2.150E+06 | 2.150E+06 | 2.150E+06 | 2.150E+06 | 2.510E+06 | 2.150E+06 |

# APPENDIX H

## $R_i$ Teen Dose Factors for use in the Gaseous Dose Calculations

| Agegroup: | TEEN | Pathway: | Ground Plane Deposition (GPD) | | | Units: | $m^2$·mrem/yr / µCi/sec | |
|---|---|---|---|---|---|---|---|---|
| **Nuclide** | **Bone** | **Liver** | **Thyroid** | **Kidney** | **Lung** | **Gilli** | **Skin** | **Total Body** |
| SR-92 | 7.770E+05 | 7.770E+05 | 7.770E+05 | 7.770E+05 | 7.770E+05 | 7.770E+05 | 8.630E+05 | 7.770E+05 |
| Y-90 | 4.490E+03 | 4.490E+03 | 4.490E+03 | 4.490E+03 | 4.490E+03 | 4.490E+03 | 5.310E+03 | 4.490E+03 |
| Y-91 | 1.070E+06 | 1.070E+06 | 1.070E+06 | 1.070E+06 | 1.070E+06 | 1.070E+06 | 1.210E+06 | 1.070E+06 |
| Y-91M | 1.000E+05 | 1.000E+05 | 1.000E+05 | 1.000E+05 | 1.000E+05 | 1.000E+05 | 1.160E+05 | 1.000E+05 |
| Y-92 | 1.800E+05 | 1.800E+05 | 1.800E+05 | 1.800E+05 | 1.800E+05 | 1.800E+05 | 2.140E+05 | 1.800E+05 |
| Y-93 | 1.830E+05 | 1.830E+05 | 1.830E+05 | 1.830E+05 | 1.830E+05 | 1.830E+05 | 2.510E+05 | 1.830E+05 |
| ZR-95 | 2.450E+08 | 2.450E+08 | 2.450E+08 | 2.450E+08 | 2.450E+08 | 2.450E+08 | 2.840E+08 | 2.450E+08 |
| ZR-97 | 2.960E+06 | 2.960E+06 | 2.960E+06 | 2.960E+06 | 2.960E+06 | 2.960E+06 | 3.440E+06 | 2.960E+06 |
| NB-95 | 1.370E+08 | 1.370E+08 | 1.370E+08 | 1.370E+08 | 1.370E+08 | 1.370E+08 | 1.610E+08 | 1.370E+08 |
| MO-99 | 3.990E+06 | 3.990E+06 | 3.990E+06 | 3.990E+06 | 3.990E+06 | 3.990E+06 | 4.630E+06 | 3.990E+06 |
| TC-99M | 1.840E+05 | 1.840E+05 | 1.840E+05 | 1.840E+05 | 1.840E+05 | 1.840E+05 | 2.110E+05 | 1.840E+05 |
| TC-101 | 2.040E+04 | 2.040E+04 | 2.040E+04 | 2.040E+04 | 2.040E+04 | 2.040E+04 | 2.260E+04 | 2.040E+04 |
| RU-103 | 1.080E+08 | 1.080E+08 | 1.080E+08 | 1.080E+08 | 1.080E+08 | 1.080E+08 | 1.260E+08 | 1.080E+08 |
| RU-105 | 6.360E+05 | 6.360E+05 | 6.360E+05 | 6.360E+05 | 6.360E+05 | 6.360E+05 | 7.210E+05 | 6.360E+05 |
| RU-106 | 4.220E+08 | 4.220E+08 | 4.220E+08 | 4.220E+08 | 4.220E+08 | 4.220E+08 | 5.070E+08 | 4.220E+08 |
| AG-110M | 3.440E+09 | 3.440E+09 | 3.440E+09 | 3.440E+09 | 3.440E+09 | 3.440E+09 | 4.010E+09 | 3.440E+09 |
| TE-125M | 1.550E+06 | 1.550E+06 | 1.550E+06 | 1.550E+06 | 1.550E+06 | 1.550E+06 | 2.130E+06 | 1.550E+06 |
| TE-127 | 2.980E+03 | 2.980E+03 | 2.980E+03 | 2.980E+03 | 2.980E+03 | 2.980E+03 | 3.280E+03 | 2.980E+03 |
| TE-127M | 9.160E+04 | 9.160E+04 | 9.160E+04 | 9.160E+04 | 9.160E+04 | 9.160E+04 | 1.080E+05 | 9.160E+04 |
| TE-129 | 2.620E+04 | 2.620E+04 | 2.620E+04 | 2.620E+04 | 2.620E+04 | 2.620E+04 | 3.100E+04 | 2.620E+04 |
| TE-129M | 1.980E+07 | 1.980E+07 | 1.980E+07 | 1.980E+07 | 1.980E+07 | 1.980E+07 | 2.310E+07 | 1.980E+07 |
| TE-131 | 2.920E+04 | 2.920E+04 | 2.920E+04 | 2.920E+04 | 2.920E+04 | 2.920E+04 | 3.450E+07 | 2.920E+04 |
| TE-131M | 8.030E+06 | 8.030E+06 | 8.030E+06 | 8.030E+06 | 8.030E+06 | 8.030E+06 | 9.460E+06 | 8.030E+06 |
| TE-132 | 4.230E+06 | 4.230E+06 | 4.230E+06 | 4.230E+06 | 4.230E+06 | 4.230E+06 | 4.980E+06 | 4.230E+06 |
| I-130 | 5.510E+06 | 5.510E+06 | 5.510E+06 | 5.510E+06 | 5.510E+06 | 5.510E+06 | 6.690E+06 | 5.510E+06 |

# APPENDIX H

## $R_i$ Teen Dose Factors for use in the Gaseous Dose Calculations

| Agegroup: | TEEN | Pathway: | Ground Plane Deposition (GPD) | | | Units: | $m^2$·mrem/yr / µCi/sec | |
|---|---|---|---|---|---|---|---|---|
| **Nuclide** | **Bone** | **Liver** | **Thyroid** | **Kidney** | **Lung** | **Gilli** | **Skin** | **Total Body** |
| I-131 | 1.720E+07 | 1.720E+07 | 1.720E+07 | 1.720E+07 | 1.720E+07 | 1.720E+07 | 2.090E+07 | 1.720E+07 |
| I-132 | 1.250E+06 | 1.250E+06 | 1.250E+06 | 1.250E+06 | 1.250E+06 | 1.250E+06 | 1.470E+06 | 1.250E+06 |
| I-133 | 2.450E+06 | 2.450E+06 | 2.450E+06 | 2.450E+06 | 2.450E+06 | 2.450E+06 | 2.980E+06 | 2.450E+06 |
| I-134 | 4.470E+05 | 4.470E+05 | 4.470E+05 | 4.470E+05 | 4.470E+05 | 4.470E+05 | 5.300E+05 | 4.470E+05 |
| I-135 | 2.530E+06 | 2.530E+06 | 2.530E+06 | 2.530E+06 | 2.530E+06 | 2.530E+06 | 2.950E+06 | 2.530E+06 |
| CS-134 | 6.860E+09 | 6.860E+09 | 6.860E+09 | 6.860E+09 | 6.860E+09 | 6.860E+09 | 8.000E+09 | 6.860E+09 |
| CS-136 | 1.510E+08 | 1.510E+08 | 1.510E+08 | 1.510E+08 | 1.510E+08 | 1.510E+08 | 1.710E+08 | 1.510E+08 |
| CS-137 | 1.030E+10 | 1.030E+10 | 1.030E+10 | 1.030E+10 | 1.030E+10 | 1.030E+10 | 1.200E+10 | 1.030E+10 |
| CS-138 | 3.590E+05 | 3.590E+05 | 3.590E+05 | 3.590E+05 | 3.590E+05 | 3.590E+05 | 4.100E+05 | 3.590E+05 |
| BA-139 | 1.060E+05 | 1.060E+05 | 1.060E+05 | 1.060E+05 | 1.060E+05 | 1.060E+05 | 1.190E+05 | 1.060E+05 |
| BA-140 | 2.050E+07 | 2.050E+07 | 2.050E+07 | 2.050E+07 | 2.050E+07 | 2.050E+07 | 2.350E+07 | 2.050E+07 |
| BA-141 | 4.170E+04 | 4.170E+04 | 4.170E+04 | 4.170E+04 | 4.170E+04 | 4.170E+04 | 4.750E+04 | 4.170E+04 |
| BA-142 | 4.490E+04 | 4.490E+04 | 4.490E+04 | 4.490E+04 | 4.490E+04 | 4.490E+04 | 5.110E+04 | 4.490E+04 |
| LA-140 | 1.920E+07 | 1.920E+07 | 1.920E+07 | 1.920E+07 | 1.920E+07 | 1.920E+07 | 2.180E+07 | 1.920E+07 |
| LA-142 | 7.600E+05 | 7.600E+05 | 7.600E+05 | 7.600E+05 | 7.600E+05 | 7.600E+05 | 9.120E+05 | 7.600E+05 |
| CE-141 | 1.370E+07 | 1.370E+07 | 1.370E+07 | 1.370E+07 | 1.370E+07 | 1.370E+07 | 1.540E+07 | 1.370E+07 |
| CE-143 | 2.310E+06 | 2.310E+06 | 2.310E+06 | 2.310E+06 | 2.310E+06 | 2.310E+06 | 2.630E+06 | 2.310E+06 |
| CE-144 | 6.950E+07 | 6.950E+07 | 6.950E+07 | 6.950E+07 | 6.950E+07 | 6.950E+07 | 8.040E+07 | 6.950E+07 |
| PR-143 | 0.000E+00 | 0.000E+00 | 0.000E+00 | 0.000E+00 | 0.000E+00 | 0.000E+00 | 0.000E+00 | 0.000E+00 |
| PR-144 | 1.830E+03 | 1.830E+03 | 1.830E+03 | 1.830E+03 | 1.830E+03 | 1.830E+03 | 2.110E+03 | 1.830E+03 |
| ND-147 | 8.390E+06 | 8.390E+06 | 8.390E+06 | 8.390E+06 | 8.390E+06 | 8.390E+06 | 1.010E+07 | 8.390E+06 |
| W-187 | 2.350E+06 | 2.350E+06 | 2.350E+06 | 2.350E+06 | 2.350E+06 | 2.350E+06 | 2.730E+06 | 2.350E+06 |
| NP-239 | 1.710E+06 | 1.710E+06 | 1.710E+06 | 1.710E+06 | 1.710E+06 | 1.710E+06 | 1.980E+06 | 1.710E+06 |

# APPENDIX I

## $R_i$ Child Dose Factors for use in the Gaseous Dose Calculations

| Agegroup: | CHILD | Pathway: | Grs/Cow/Milk (CMILK) | | | Units: | $m^2$·mrem/yr / µCi/sec; mrem/yr / µCi/$m^3$ (H-3, C-14) | |
|---|---|---|---|---|---|---|---|---|
| **Nuclide** | **Bone** | **Liver** | **Thyroid** | **Kidney** | **Lung** | **Gilli** | **Skin** | **Total Body** |
| H-3 | 0.000E+00 | 1.570E+03 | 1.570E+03 | 1.570E+03 | 1.570E+03 | 1.570E+03 | 0.000E+00 | 1.570E+03 |
| C-14 | 1.150E+05 | 2.310E+04 | 2.310E+04 | 2.310E+04 | 2.310E+04 | 2.310E+04 | 0.000E+00 | 2.310E+04 |
| NA-24 | 8.850E+06 | 8.850E+06 | 8.850E+06 | 8.850E+06 | 8.850E+06 | 8.850E+06 | 0.000E+00 | 8.850E+06 |
| P-32 | 7.780E+10 | 3.640E+09 | 0.000E+00 | 0.000E+00 | 0.000E+00 | 2.150E+09 | 0.000E+00 | 3.000E+09 |
| CR-51 | 0.000E+00 | 0.000E+00 | 5.650E+04 | 1.540E+04 | 1.030E+05 | 5.400E+06 | 0.000E+00 | 1.020E+05 |
| MN-54 | 0.000E+00 | 2.100E+07 | 0.000E+00 | 5.880E+06 | 0.000E+00 | 1.760E+07 | 0.000E+00 | 5.590E+06 |
| MN-56 | 0.000E+00 | 1.260E-02 | 0.000E+00 | 1.530E-02 | 0.000E+00 | 1.830E+00 | 0.000E+00 | 2.860E-03 |
| FE-55 | 1.120E+08 | 5.930E+07 | 0.000E+00 | 0.000E+00 | 3.350E+07 | 1.100E+07 | 0.000E+00 | 1.840E+07 |
| FE-59 | 1.200E+08 | 1.950E+08 | 0.000E+00 | 0.000E+00 | 5.640E+07 | 2.030E+08 | 0.000E+00 | 9.690E+07 |
| CO-58 | 0.000E+00 | 1.210E+07 | 0.000E+00 | 0.000E+00 | 0.000E+00 | 7.070E+07 | 0.000E+00 | 3.710E+07 |
| CO-60 | 0.000E+00 | 4.320E+07 | 0.000E+00 | 0.000E+00 | 0.000E+00 | 2.390E+08 | 0.000E+00 | 1.270E+08 |
| NI-63 | 2.960E+10 | 1.590E+09 | 0.000E+00 | 0.000E+00 | 0.000E+00 | 1.070E+08 | 0.000E+00 | 1.010E+09 |
| NI-65 | 1.660E+00 | 1.560E-01 | 0.000E+00 | 0.000E+00 | 0.000E+00 | 1.910E+01 | 0.000E+00 | 9.100E-02 |
| CU-64 | 0.000E+00 | 7.460E+04 | 0.000E+00 | 1.800E+05 | 0.000E+00 | 3.500E+06 | 0.000E+00 | 4.510E+04 |
| ZN-65 | 4.130E+09 | 1.100E+10 | 0.000E+00 | 6.940E+09 | 0.000E+00 | 1.930E+09 | 0.000E+00 | 6.850E+09 |
| ZN-69 | 9.460E-12 | 1.370E-11 | 0.000E+00 | 8.300E-12 | 0.000E+00 | 8.620E-10 | 0.000E+00 | 1.260E-12 |
| BR-83 | 0.000E+00 | 0.000E+00 | 0.000E+00 | 0.000E+00 | 0.000E+00 | 0.000E+00 | 0.000E+00 | 4.400E-01 |
| BR-84 | 0.000E+00 | 0.000E+00 | 0.000E+00 | 0.000E+00 | 0.000E+00 | 0.000E+00 | 0.000E+00 | 6.510E-23 |
| BR-85 | 0.000E+00 | 0.000E+00 | 0.000E+00 | 0.000E+00 | 0.000E+00 | 0.000E+00 | 0.000E+00 | 0.000E+00 |
| RB-86 | 0.000E+00 | 8.770E+09 | 0.000E+00 | 0.000E+00 | 0.000E+00 | 5.640E+08 | 0.000E+00 | 5.390E+09 |
| RB-88 | 0.000E+00 | 7.160E-45 | 0.000E+00 | 0.000E+00 | 0.000E+00 | 3.510E-46 | 0.000E+00 | 4.970E-45 |
| RB-89 | 0.000E+00 | 1.340E-52 | 0.000E+00 | 0.000E+00 | 0.000E+00 | 1.170E-54 | 0.000E+00 | 1.190E-52 |
| SR-89 | 6.620E+09 | 0.000E+00 | 0.000E+00 | 0.000E+00 | 0.000E+00 | 2.560E+08 | 0.000E+00 | 1.890E+08 |
| SR-90 | 1.120E+11 | 0.000E+00 | 0.000E+00 | 0.000E+00 | 0.000E+00 | 1.510E+09 | 0.000E+00 | 2.830E+10 |
| SR-91 | 1.300E+05 | 0.000E+00 | 0.000E+00 | 0.000E+00 | 0.000E+00 | 2.880E+05 | 0.000E+00 | 4.920E+03 |

# APPENDIX I

## $R_i$ Child Dose Factors for use in the Gaseous Dose Calculations

| Agegroup: | CHILD | Pathway: | Grs/Cow/Milk (CMILK) | | | Units: | $m^2$·mrem/yr / µCi/sec; mrem/yr / µCi/$m^3$ (H-3, C-14) | |
|---|---|---|---|---|---|---|---|---|
| **Nuclide** | **Bone** | **Liver** | **Thyroid** | **Kidney** | **Lung** | **Gilli** | **Skin** | **Total Body** |
| SR-92 | 2.180E+00 | 0.000E+00 | 0.000E+00 | 0.000E+00 | 0.000E+00 | 4.130E+01 | 0.000E+00 | 8.750E-02 |
| Y-90 | 3.220E+02 | 0.000E+00 | 0.000E+00 | 0.000E+00 | 0.000E+00 | 9.170E+05 | 0.000E+00 | 8.620E+00 |
| Y-91 | 3.900E+04 | 0.000E+00 | 0.000E+00 | 0.000E+00 | 0.000E+00 | 5.200E+06 | 0.000E+00 | 1.040E+03 |
| Y-91M | 2.670E-19 | 0.000E+00 | 0.000E+00 | 0.000E+00 | 0.000E+00 | 5.240E-16 | 0.000E+00 | 9.730E-21 |
| Y-92 | 2.530E-04 | 0.000E+00 | 0.000E+00 | 0.000E+00 | 0.000E+00 | 7.310E+00 | 0.000E+00 | 7.240E-06 |
| Y-93 | 1.010E+00 | 0.000E+00 | 0.000E+00 | 0.000E+00 | 0.000E+00 | 1.510E+04 | 0.000E+00 | 2.780E-02 |
| ZR-95 | 3.830E+03 | 8.420E+02 | 0.000E+00 | 1.210E+03 | 0.000E+00 | 8.790E+05 | 0.000E+00 | 7.500E+02 |
| ZR-97 | 1.920E+00 | 2.770E-01 | 0.000E+00 | 3.980E-01 | 0.000E+00 | 4.200E+04 | 0.000E+00 | 1.640E-01 |
| NB-95 | 3.180E+05 | 1.240E+05 | 0.000E+00 | 1.160E+05 | 0.000E+00 | 2.290E+08 | 0.000E+00 | 8.840E+04 |
| MO-99 | 0.000E+00 | 8.140E+07 | 0.000E+00 | 1.740E+08 | 0.000E+00 | 6.730E+07 | 0.000E+00 | 2.010E+07 |
| TC-99M | 1.320E+01 | 2.590E+01 | 0.000E+00 | 3.760E+02 | 1.320E+01 | 1.470E+04 | 0.000E+00 | 4.290E+02 |
| TC-101 | 1.160E-59 | 1.220E-59 | 0.000E+00 | 2.080E-58 | 6.440E-60 | 3.870E-59 | 0.000E+00 | 1.540E-58 |
| RU-103 | 4.280E+03 | 0.000E+00 | 0.000E+00 | 1.080E+04 | 0.000E+00 | 1.110E+05 | 0.000E+00 | 1.650E+03 |
| RU-105 | 3.820E-03 | 0.000E+00 | 0.000E+00 | 3.360E-02 | 0.000E+00 | 2.490E+00 | 0.000E+00 | 1.390E-03 |
| RU-106 | 9.240E+04 | 0.000E+00 | 0.000E+00 | 1.250E+05 | 0.000E+00 | 1.440E+06 | 0.000E+00 | 1.150E+04 |
| AG-110M | 2.090E+08 | 1.410E+08 | 0.000E+00 | 2.630E+08 | 0.000E+00 | 1.680E+10 | 0.000E+00 | 1.130E+08 |
| TE-125M | 7.380E+07 | 2.000E+07 | 2.070E+07 | 0.000E+00 | 0.000E+00 | 7.120E+07 | 0.000E+00 | 9.840E+06 |
| TE-127 | 2.980E+03 | 8.020E+02 | 2.060E+03 | 8.470E+03 | 0.000E+00 | 1.160E+05 | 0.000E+00 | 6.380E+02 |
| TE-127M | 2.080E+08 | 5.600E+07 | 4.970E+07 | 5.930E+08 | 0.000E+00 | 1.680E+08 | 0.000E+00 | 2.470E+07 |
| TE-129 | 1.280E-09 | 3.580E-10 | 9.160E-10 | 3.750E-09 | 0.000E+00 | 7.990E-08 | 0.000E+00 | 3.050E-10 |
| TE-129M | 2.710E+08 | 7.580E+07 | 8.750E+07 | 7.970E+08 | 0.000E+00 | 3.310E+08 | 0.000E+00 | 4.210E+07 |
| TE-131 | 1.620E-32 | 4.920E-33 | 1.240E-32 | 4.890E-32 | 0.000E+00 | 8.490E-32 | 0.000E+00 | 4.810E-33 |
| TE-131M | 1.600E+06 | 5.530E+05 | 1.140E+06 | 5.350E+06 | 0.000E+00 | 2.240E+07 | 0.000E+00 | 5.890E+05 |
| TE-132 | 1.020E+07 | 4.530E+06 | 6.600E+06 | 4.210E+07 | 0.000E+00 | 4.570E+07 | 0.000E+00 | 5.480E+06 |
| I-130 | 1.730E+06 | 3.490E+06 | 3.840E+08 | 5.220E+06 | 0.000E+00 | 1.630E+06 | 0.000E+00 | 1.800E+06 |

# APPENDIX I

## $R_i$ Child Dose Factors for use in the Gaseous Dose Calculations

| Agegroup: | CHILD | Pathway: | Grs/Cow/Milk (CMILK) | | | Units: | $m^2$·mrem/yr / µCi/sec; mrem/yr / µCi/$m^3$ (H-3, C-14) | |
|---|---|---|---|---|---|---|---|---|
| **Nuclide** | **Bone** | **Liver** | **Thyroid** | **Kidney** | **Lung** | **Gilli** | **Skin** | **Total Body** |
| I-131 | 1.300E+09 | 1.310E+09 | 4.330E+11 | 2.150E+09 | 0.000E+00 | 1.170E+08 | 0.000E+00 | 7.450E+08 |
| I-132 | 6.890E-01 | 1.270E+00 | 5.870E+01 | 1.940E+00 | 0.000E+00 | 1.490E+00 | 0.000E+00 | 5.820E-01 |
| I-133 | 1.720E+07 | 2.120E+07 | 3.940E+09 | 3.540E+07 | 0.000E+00 | 8.560E+06 | 0.000E+00 | 8.030E+06 |
| I-134 | 8.480E-12 | 1.570E-11 | 3.620E-10 | 2.410E-11 | 0.000E+00 | 1.040E-11 | 0.000E+00 | 7.250E-12 |
| I-135 | 5.400E+04 | 9.720E+04 | 8.610E+06 | 1.490E+05 | 0.000E+00 | 7.400E+04 | 0.000E+00 | 4.600E+04 |
| CS-134 | 2.260E+10 | 3.720E+10 | 0.000E+00 | 1.150E+10 | 4.130E+09 | 2.000E+08 | 0.000E+00 | 7.840E+09 |
| CS-136 | 1.010E+09 | 2.780E+09 | 0.000E+00 | 1.480E+09 | 2.210E+08 | 9.770E+07 | 0.000E+00 | 1.800E+09 |
| CS-137 | 3.220E+10 | 3.090E+10 | 0.000E+00 | 1.010E+10 | 3.620E+09 | 1.930E+08 | 0.000E+00 | 4.550E+09 |
| CS-138 | 3.980E-23 | 5.530E-23 | 0.000E+00 | 3.890E-23 | 4.190E-24 | 2.550E-23 | 0.000E+00 | 3.510E-23 |
| BA-139 | 2.010E-07 | 1.070E-10 | 0.000E+00 | 9.360E-11 | 6.300E-11 | 1.160E-05 | 0.000E+00 | 5.820E-09 |
| BA-140 | 1.170E+08 | 1.030E+05 | 0.000E+00 | 3.340E+04 | 6.120E+04 | 5.930E+07 | 0.000E+00 | 6.840E+06 |
| BA-141 | 1.850E-45 | 1.040E-48 | 0.000E+00 | 8.960E-49 | 6.090E-48 | 1.050E-45 | 0.000E+00 | 6.020E-47 |
| BA-142 | 1.150E-79 | 8.310E-83 | 0.000E+00 | 6.720E-83 | 4.890E-83 | 1.510E-81 | 0.000E+00 | 6.450E-81 |
| LA-140 | 1.940E+01 | 6.780E+00 | 0.000E+00 | 0.000E+00 | 0.000E+00 | 1.890E+05 | 0.000E+00 | 2.290E+00 |
| LA-142 | 8.100E-11 | 2.580E-11 | 0.000E+00 | 0.000E+00 | 0.000E+00 | 5.120E-06 | 0.000E+00 | 8.090E-12 |
| CE-141 | 2.190E+04 | 1.090E+04 | 0.000E+00 | 4.780E+03 | 0.000E+00 | 1.360E+07 | 0.000E+00 | 1.620E+03 |
| CE-143 | 1.870E+02 | 1.020E+05 | 0.000E+00 | 4.260E+01 | 0.000E+00 | 1.490E+06 | 0.000E+00 | 1.470E+01 |
| CE-144 | 1.620E+06 | 5.090E+05 | 0.000E+00 | 2.820E+05 | 0.000E+00 | 1.330E+08 | 0.000E+00 | 8.660E+04 |
| PR-143 | 7.180E+02 | 2.160E+02 | 0.000E+00 | 1.170E+02 | 0.000E+00 | 7.750E+05 | 0.000E+00 | 3.560E+01 |
| PR-144 | 2.680E-53 | 8.290E-54 | 0.000E+00 | 4.380E-54 | 0.000E+00 | 1.780E-50 | 0.000E+00 | 1.350E-54 |
| ND-147 | 4.450E+02 | 3.600E+02 | 0.000E+00 | 1.980E+02 | 0.000E+00 | 5.700E+05 | 0.000E+00 | 2.790E+01 |
| W-187 | 2.890E+04 | 1.710E+04 | 0.000E+00 | 0.000E+00 | 0.000E+00 | 2.400E+06 | 0.000E+00 | 7.670E+03 |
| NP-239 | 1.720E+01 | 1.240E+00 | 0.000E+00 | 3.580E+00 | 0.000E+00 | 9.170E+04 | 0.000E+00 | 8.710E-01 |

# APPENDIX I

## $R_i$ Child Dose Factors for use in the Gaseous Dose Calculations

| Agegroup: | CHILD | Pathway: | Grs/Goat/Milk (GMILK) | | | Units: | $m^2$·mrem/yr / µCi/sec; mrem/yr / µCi/$m^3$ (H-3, C-14) | |
|---|---|---|---|---|---|---|---|---|
| **Nuclide** | **Bone** | **Liver** | **Thyroid** | **Kidney** | **Lung** | **Gilli** | **Skin** | **Total Body** |
| H-3 | 0.000E+00 | 3.200E+03 | 3.200E+03 | 3.200E+03 | 3.200E+03 | 3.200E+03 | 0.000E+00 | 3.200E+03 |
| C-14 | 1.150E+05 | 2.310E+04 | 2.310E+04 | 2.310E+04 | 2.310E+04 | 2.310E+04 | 0.000E+00 | 2.310E+04 |
| NA-24 | 1.060E+06 | 1.060E+06 | 1.060E+06 | 1.060E+06 | 1.060E+06 | 1.060E+06 | 0.000E+00 | 1.060E+06 |
| P-32 | 9.330E+10 | 4.370E+09 | 0.000E+00 | 0.000E+00 | 0.000E+00 | 2.580E+09 | 0.000E+00 | 3.600E+09 |
| CR-51 | 0.000E+00 | 0.000E+00 | 6.780E+03 | 1.850E+03 | 1.240E+04 | 6.480E+05 | 0.000E+00 | 1.220E+04 |
| MN-54 | 0.000E+00 | 2.520E+06 | 0.000E+00 | 7.060E+05 | 0.000E+00 | 2.110E+06 | 0.000E+00 | 6.700E+05 |
| MN-56 | 0.000E+00 | 1.520E-03 | 0.000E+00 | 1.840E-03 | 0.000E+00 | 2.200E-01 | 0.000E+00 | 3.430E-04 |
| FE-55 | 1.450E+06 | 7.710E+05 | 0.000E+00 | 0.000E+00 | 4.360E+05 | 1.430E+05 | 0.000E+00 | 2.390E+05 |
| FE-59 | 1.560E+06 | 2.530E+06 | 0.000E+00 | 0.000E+00 | 7.330E+05 | 2.630E+06 | 0.000E+00 | 1.260E+06 |
| CO-58 | 0.000E+00 | 1.450E+06 | 0.000E+00 | 0.000E+00 | 0.000E+00 | 8.490E+06 | 0.000E+00 | 4.450E+06 |
| CO-60 | 0.000E+00 | 5.180E+06 | 0.000E+00 | 0.000E+00 | 0.000E+00 | 2.870E+07 | 0.000E+00 | 1.530E+07 |
| NI-63 | 3.560E+09 | 1.900E+08 | 0.000E+00 | 0.000E+00 | 0.000E+00 | 1.280E+07 | 0.000E+00 | 1.210E+08 |
| NI-65 | 1.990E-01 | 1.870E-02 | 0.000E+00 | 0.000E+00 | 0.000E+00 | 2.290E+00 | 0.000E+00 | 1.090E-02 |
| CU-64 | 0.000E+00 | 8.320E+03 | 0.000E+00 | 2.010E+04 | 0.000E+00 | 3.900E+05 | 0.000E+00 | 5.020E+03 |
| ZN-65 | 4.960E+08 | 1.320E+09 | 0.000E+00 | 8.330E+08 | 0.000E+00 | 2.320E+08 | 0.000E+00 | 8.220E+08 |
| ZN-69 | 1.140E-12 | 1.640E-12 | 0.000E+00 | 9.960E-13 | 0.000E+00 | 1.030E-10 | 0.000E+00 | 1.520E-13 |
| BR-83 | 0.000E+00 | 0.000E+00 | 0.000E+00 | 0.000E+00 | 0.000E+00 | 0.000E+00 | 0.000E+00 | 5.280E-02 |
| BR-84 | 0.000E+00 | 0.000E+00 | 0.000E+00 | 0.000E+00 | 0.000E+00 | 0.000E+00 | 0.000E+00 | 7.820E-24 |
| BR-85 | 0.000E+00 | 0.000E+00 | 0.000E+00 | 0.000E+00 | 0.000E+00 | 0.000E+00 | 0.000E+00 | 0.000E+00 |
| RB-86 | 0.000E+00 | 1.050E+09 | 0.000E+00 | 0.000E+00 | 0.000E+00 | 6.770E+07 | 0.000E+00 | 6.470E+08 |
| RB-88 | 0.000E+00 | 8.590E-46 | 0.000E+00 | 0.000E+00 | 0.000E+00 | 4.210E-47 | 0.000E+00 | 5.970E-46 |
| RB-89 | 0.000E+00 | 1.610E-53 | 0.000E+00 | 0.000E+00 | 0.000E+00 | 1.410E-55 | 0.000E+00 | 1.430E-53 |
| SR-89 | 1.390E+10 | 0.000E+00 | 0.000E+00 | 0.000E+00 | 0.000E+00 | 5.380E+08 | 0.000E+00 | 3.970E+08 |
| SR-90 | 2.350E+11 | 0.000E+00 | 0.000E+00 | 0.000E+00 | 0.000E+00 | 3.160E+09 | 0.000E+00 | 5.950E+10 |
| SR-91 | 2.740E+05 | 0.000E+00 | 0.000E+00 | 0.000E+00 | 0.000E+00 | 6.040E+05 | 0.000E+00 | 1.030E+04 |

# APPENDIX I

## $R_i$ Child Dose Factors for use in the Gaseous Dose Calculations

| Agegroup: | CHILD | Pathway: | Grs/Goat/Milk (GMILK) | | | Units: | $m^2$·mrem/yr / µCi/sec; mrem/yr / µCi/$m^3$ (H-3, C-14) | |
|---|---|---|---|---|---|---|---|---|
| **Nuclide** | **Bone** | **Liver** | **Thyroid** | **Kidney** | **Lung** | **Gilli** | **Skin** | **Total Body** |
| SR-92 | 4.580E+00 | 0.000E+00 | 0.000E+00 | 0.000E+00 | 0.000E+00 | 8.680E+01 | 0.000E+00 | 1.840E-01 |
| Y-90 | 3.870E+01 | 0.000E+00 | 0.000E+00 | 0.000E+00 | 0.000E+00 | 1.100E+05 | 0.000E+00 | 1.030E+00 |
| Y-91 | 4.680E+03 | 0.000E+00 | 0.000E+00 | 0.000E+00 | 0.000E+00 | 6.240E+05 | 0.000E+00 | 1.250E+02 |
| Y-91M | 3.210E-20 | 0.000E+00 | 0.000E+00 | 0.000E+00 | 0.000E+00 | 6.280E-17 | 0.000E+00 | 1.170E-21 |
| Y-92 | 3.040E-05 | 0.000E+00 | 0.000E+00 | 0.000E+00 | 0.000E+00 | 8.770E-01 | 0.000E+00 | 8.690E-07 |
| Y-93 | 1.210E-01 | 0.000E+00 | 0.000E+00 | 0.000E+00 | 0.000E+00 | 1.810E+03 | 0.000E+00 | 3.330E-03 |
| ZR-95 | 4.600E+02 | 1.010E+02 | 0.000E+00 | 1.450E+02 | 0.000E+00 | 1.050E+05 | 0.000E+00 | 9.000E+01 |
| ZR-97 | 2.300E-01 | 3.330E-02 | 0.000E+00 | 4.780E-02 | 0.000E+00 | 5.040E+03 | 0.000E+00 | 1.960E-02 |
| NB-95 | 3.810E+04 | 1.490E+04 | 0.000E+00 | 1.400E+04 | 0.000E+00 | 2.750E+07 | 0.000E+00 | 1.060E+04 |
| MO-99 | 0.000E+00 | 9.760E+06 | 0.000E+00 | 2.090E+07 | 0.000E+00 | 8.080E+06 | 0.000E+00 | 2.420E+06 |
| TC-99M | 1.590E+00 | 3.110E+00 | 0.000E+00 | 4.520E+01 | 1.580E+00 | 1.770E+03 | 0.000E+00 | 5.150E+01 |
| TC-101 | 1.400E-60 | 1.460E-60 | 0.000E+00 | 2.490E-59 | 7.720E-61 | 4.640E-60 | 0.000E+00 | 1.850E-59 |
| RU-103 | 5.140E+02 | 0.000E+00 | 0.000E+00 | 1.290E+03 | 0.000E+00 | 1.330E+04 | 0.000E+00 | 1.980E+02 |
| RU-105 | 4.580E-04 | 0.000E+00 | 0.000E+00 | 4.030E-03 | 0.000E+00 | 2.990E-01 | 0.000E+00 | 1.660E-04 |
| RU-106 | 1.110E+04 | 0.000E+00 | 0.000E+00 | 1.500E+04 | 0.000E+00 | 1.720E+05 | 0.000E+00 | 1.380E+03 |
| AG-110M | 2.510E+07 | 1.690E+07 | 0.000E+00 | 3.150E+07 | 0.000E+00 | 2.010E+09 | 0.000E+00 | 1.350E+07 |
| TE-125M | 8.850E+06 | 2.400E+06 | 2.480E+06 | 0.000E+00 | 0.000E+00 | 8.540E+06 | 0.000E+00 | 1.180E+06 |
| TE-127 | 3.570E+02 | 9.630E+01 | 2.470E+02 | 1.020E+03 | 0.000E+00 | 1.390E+04 | 0.000E+00 | 7.660E+01 |
| TE-127M | 2.500E+07 | 6.720E+06 | 5.970E+06 | 7.120E+07 | 0.000E+00 | 2.020E+07 | 0.000E+00 | 2.960E+06 |
| TE-129 | 1.540E-10 | 4.300E-11 | 1.100E-10 | 4.510E-10 | 0.000E+00 | 9.590E-09 | 0.000E+00 | 3.660E-11 |
| TE-129M | 3.260E+07 | 9.090E+06 | 1.050E+07 | 9.560E+07 | 0.000E+00 | 3.970E+07 | 0.000E+00 | 5.060E+06 |
| TE-131 | 1.940E-33 | 5.910E-34 | 1.480E-33 | 5.860E-33 | 0.000E+00 | 1.020E-32 | 0.000E+00 | 5.770E-34 |
| TE-131M | 1.920E+05 | 6.640E+04 | 1.360E+05 | 6.420E+05 | 0.000E+00 | 2.690E+06 | 0.000E+00 | 7.060E+04 |
| TE-132 | 1.230E+06 | 5.440E+05 | 7.920E+05 | 5.050E+06 | 0.000E+00 | 5.480E+06 | 0.000E+00 | 6.570E+05 |
| I-130 | 2.070E+06 | 4.190E+06 | 4.610E+08 | 6.260E+06 | 0.000E+00 | 1.960E+06 | 0.000E+00 | 2.160E+06 |

# APPENDIX I

## $R_i$ Child Dose Factors for use in the Gaseous Dose Calculations

| Agegroup: | CHILD | Pathway: | Grs/Goat/Milk (GMILK) | | | Units: | $m^2$·mrem/yr / µCi/sec; mrem/yr / µCi/$m^3$ (H-3, C-14) | |
|---|---|---|---|---|---|---|---|---|
| **Nuclide** | **Bone** | **Liver** | **Thyroid** | **Kidney** | **Lung** | **Gilli** | **Skin** | **Total Body** |
| I-131 | 1.560E+09 | 1.570E+09 | 5.200E+11 | 2.580E+09 | 0.000E+00 | 1.400E+08 | 0.000E+00 | 8.940E+08 |
| I-132 | 8.270E-01 | 1.520E+00 | 7.050E+01 | 2.330E+00 | 0.000E+00 | 1.790E+00 | 0.000E+00 | 6.990E-01 |
| I-133 | 2.060E+07 | 2.550E+07 | 4.730E+09 | 4.250E+07 | 0.000E+00 | 1.030E+07 | 0.000E+00 | 9.640E+06 |
| I-134 | 1.020E-11 | 1.890E-11 | 4.350E-10 | 2.890E-11 | 0.000E+00 | 1.250E-11 | 0.000E+00 | 8.700E-12 |
| I-135 | 6.480E+04 | 1.170E+05 | 1.030E+07 | 1.790E+05 | 0.000E+00 | 8.880E+04 | 0.000E+00 | 5.520E+04 |
| CS-134 | 6.790E+10 | 1.110E+11 | 0.000E+00 | 3.450E+10 | 1.240E+10 | 6.010E+08 | 0.000E+00 | 2.350E+10 |
| CS-136 | 3.030E+09 | 8.340E+09 | 0.000E+00 | 4.440E+09 | 6.630E+08 | 2.930E+08 | 0.000E+00 | 5.400E+09 |
| CS-137 | 9.670E+10 | 9.260E+10 | 0.000E+00 | 3.020E+10 | 1.090E+10 | 5.800E+08 | 0.000E+00 | 1.370E+10 |
| CS-138 | 1.190E-22 | 1.660E-22 | 0.000E+00 | 1.170E-22 | 1.260E-23 | 7.640E-23 | 0.000E+00 | 1.050E-22 |
| BA-139 | 2.410E-08 | 1.290E-11 | 0.000E+00 | 1.120E-11 | 7.560E-12 | 1.390E-06 | 0.000E+00 | 6.980E-10 |
| BA-140 | 1.410E+07 | 1.230E+04 | 0.000E+00 | 4.010E+03 | 7.340E+03 | 7.120E+06 | 0.000E+00 | 8.200E+05 |
| BA-141 | 2.220E-46 | 1.240E-49 | 0.000E+00 | 1.080E-49 | 7.300E-49 | 1.270E-46 | 0.000E+00 | 7.230E-48 |
| BA-142 | 1.390E-80 | 9.970E-84 | 0.000E+00 | 8.070E-84 | 5.870E-84 | 1.810E-82 | 0.000E+00 | 7.740E-82 |
| LA-140 | 2.330E+00 | 8.140E-01 | 0.000E+00 | 0.000E+00 | 0.000E+00 | 2.270E+04 | 0.000E+00 | 2.740E-01 |
| LA-142 | 9.730E-12 | 3.100E-12 | 0.000E+00 | 0.000E+00 | 0.000E+00 | 6.140E-07 | 0.000E+00 | 9.710E-13 |
| CE-141 | 2.620E+03 | 1.310E+03 | 0.000E+00 | 5.740E+02 | 0.000E+00 | 1.630E+06 | 0.000E+00 | 1.940E+02 |
| CE-143 | 2.250E+01 | 1.220E+04 | 0.000E+00 | 5.120E+00 | 0.000E+00 | 1.790E+05 | 0.000E+00 | 1.770E+00 |
| CE-144 | 1.950E+05 | 6.110E+04 | 0.000E+00 | 3.380E+04 | 0.000E+00 | 1.590E+07 | 0.000E+00 | 1.040E+04 |
| PR-143 | 8.620E+01 | 2.590E+01 | 0.000E+00 | 1.400E+01 | 0.000E+00 | 9.300E+04 | 0.000E+00 | 4.280E+00 |
| PR-144 | 3.220E-54 | 9.950E-55 | 0.000E+00 | 5.260E-55 | 0.000E+00 | 2.140E-51 | 0.000E+00 | 1.620E-55 |
| ND-147 | 5.330E+01 | 4.320E+01 | 0.000E+00 | 2.370E+01 | 0.000E+00 | 6.850E+04 | 0.000E+00 | 3.350E+00 |
| W-187 | 3.470E+03 | 2.050E+03 | 0.000E+00 | 0.000E+00 | 0.000E+00 | 2.880E+05 | 0.000E+00 | 9.210E+02 |
| NP-239 | 2.070E+00 | 1.490E-01 | 0.000E+00 | 4.300E-01 | 0.000E+00 | 1.100E+04 | 0.000E+00 | 1.040E-01 |

# APPENDIX I

## $R_i$ Child Dose Factors for use in the Gaseous Dose Calculations

| Agegroup: | CHILD | Pathway: | Grs/Cow/Meat (CMEAT) | | | Units: | $m^2$·mrem/yr / µCi/sec; mrem/yr / µCi/$m^3$ (H-3, C-14) | |
|---|---|---|---|---|---|---|---|---|
| **Nuclide** | **Bone** | **Liver** | **Thyroid** | **Kidney** | **Lung** | **Gilli** | **Skin** | **Total Body** |
| H-3 | 0.000E+00 | 2.340E+02 | 2.340E+02 | 2.340E+02 | 2.340E+02 | 2.340E+02 | 0.000E+00 | 2.340E+02 |
| C-14 | 3.700E+04 | 7.400E+03 | 7.400E+03 | 7.400E+03 | 7.400E+03 | 7.400E+03 | 0.000E+00 | 7.400E+03 |
| NA-24 | 1.720E-03 | 1.720E-03 | 1.720E-03 | 1.720E-03 | 1.720E-03 | 1.720E-03 | 0.000E+00 | 1.720E-03 |
| P-32 | 7.420E+09 | 3.470E+08 | 0.000E+00 | 0.000E+00 | 0.000E+00 | 2.050E+08 | 0.000E+00 | 2.860E+08 |
| CR-51 | 0.000E+00 | 0.000E+00 | 4.880E+03 | 1.330E+03 | 8.910E+03 | 4.660E+05 | 0.000E+00 | 8.790E+03 |
| MN-54 | 0.000E+00 | 8.010E+06 | 0.000E+00 | 2.250E+06 | 0.000E+00 | 6.720E+06 | 0.000E+00 | 2.130E+06 |
| MN-56 | 0.000E+00 | 1.430E-53 | 0.000E+00 | 1.730E-53 | 0.000E+00 | 2.070E-51 | 0.000E+00 | 3.230E-54 |
| FE-55 | 4.570E+08 | 2.420E+08 | 0.000E+00 | 0.000E+00 | 1.370E+08 | 4.490E+07 | 0.000E+00 | 7.510E+07 |
| FE-59 | 3.760E+08 | 6.090E+08 | 0.000E+00 | 0.000E+00 | 1.770E+08 | 6.340E+08 | 0.000E+00 | 3.030E+08 |
| CO-58 | 0.000E+00 | 1.640E+07 | 0.000E+00 | 0.000E+00 | 0.000E+00 | 9.580E+07 | 0.000E+00 | 5.020E+07 |
| CO-60 | 0.000E+00 | 6.930E+07 | 0.000E+00 | 0.000E+00 | 0.000E+00 | 3.840E+08 | 0.000E+00 | 2.040E+08 |
| NI-63 | 2.910E+10 | 1.560E+09 | 0.000E+00 | 0.000E+00 | 0.000E+00 | 1.050E+08 | 0.000E+00 | 9.910E+08 |
| NI-65 | 3.520E-52 | 3.310E-53 | 0.000E+00 | 0.000E+00 | 0.000E+00 | 4.060E-51 | 0.000E+00 | 1.930E-53 |
| CU-64 | 0.000E+00 | 2.970E-07 | 0.000E+00 | 7.180E-07 | 0.000E+00 | 1.390E-05 | 0.000E+00 | 1.800E-07 |
| ZN-65 | 3.750E+08 | 1.000E+09 | 0.000E+00 | 6.300E+08 | 0.000E+00 | 1.760E+08 | 0.000E+00 | 6.220E+08 |
| ZN-69 | 0.000E+00 | 0.000E+00 | 0.000E+00 | 0.000E+00 | 0.000E+00 | 0.000E+00 | 0.000E+00 | 0.000E+00 |
| BR-83 | 0.000E+00 | 0.000E+00 | 0.000E+00 | 0.000E+00 | 0.000E+00 | 0.000E+00 | 0.000E+00 | 9.520E-57 |
| BR-84 | 0.000E+00 | 0.000E+00 | 0.000E+00 | 0.000E+00 | 0.000E+00 | 0.000E+00 | 0.000E+00 | 0.000E+00 |
| BR-85 | 0.000E+00 | 0.000E+00 | 0.000E+00 | 0.000E+00 | 0.000E+00 | 0.000E+00 | 0.000E+00 | 0.000E+00 |
| RB-86 | 0.000E+00 | 5.770E+08 | 0.000E+00 | 0.000E+00 | 0.000E+00 | 3.710E+07 | 0.000E+00 | 3.550E+08 |
| RB-88 | 0.000E+00 | 0.000E+00 | 0.000E+00 | 0.000E+00 | 0.000E+00 | 0.000E+00 | 0.000E+00 | 0.000E+00 |
| RB-89 | 0.000E+00 | 0.000E+00 | 0.000E+00 | 0.000E+00 | 0.000E+00 | 0.000E+00 | 0.000E+00 | 0.000E+00 |
| SR-89 | 4.820E+08 | 0.000E+00 | 0.000E+00 | 0.000E+00 | 0.000E+00 | 1.870E+07 | 0.000E+00 | 1.380E+07 |
| SR-90 | 1.040E+10 | 0.000E+00 | 0.000E+00 | 0.000E+00 | 0.000E+00 | 1.400E+08 | 0.000E+00 | 2.640E+09 |
| SR-91 | 2.400E-10 | 0.000E+00 | 0.000E+00 | 0.000E+00 | 0.000E+00 | 5.300E-10 | 0.000E+00 | 9.050E-12 |

# APPENDIX I

## $R_i$ Child Dose Factors for use in the Gaseous Dose Calculations

| Agegroup: | CHILD | Pathway: | Grs/Cow/Meat (CMEAT) | | | Units: | $m^2$·mrem/yr / µCi/sec; mrem/yr / µCi/$m^3$ (H-3, C-14) | |
|---|---|---|---|---|---|---|---|---|
| **Nuclide** | **Bone** | **Liver** | **Thyroid** | **Kidney** | **Lung** | **Gilli** | **Skin** | **Total Body** |
| SR-92 | 1.850E-49 | 0.000E+00 | 0.000E+00 | 0.000E+00 | 0.000E+00 | 3.490E-48 | 0.000E+00 | 7.400E-51 |
| Y-90 | 1.710E+02 | 0.000E+00 | 0.000E+00 | 0.000E+00 | 0.000E+00 | 4.880E+05 | 0.000E+00 | 4.590E+00 |
| Y-91 | 1.800E+06 | 0.000E+00 | 0.000E+00 | 0.000E+00 | 0.000E+00 | 2.400E+08 | 0.000E+00 | 4.820E+04 |
| Y-91M | 0.000E+00 | 0.000E+00 | 0.000E+00 | 0.000E+00 | 0.000E+00 | 0.000E+00 | 0.000E+00 | 0.000E+00 |
| Y-92 | 2.410E-39 | 0.000E+00 | 0.000E+00 | 0.000E+00 | 0.000E+00 | 6.960E-35 | 0.000E+00 | 6.890E-41 |
| Y-93 | 7.440E-12 | 0.000E+00 | 0.000E+00 | 0.000E+00 | 0.000E+00 | 1.110E-07 | 0.000E+00 | 2.040E-13 |
| ZR-95 | 2.660E+06 | 5.850E+05 | 0.000E+00 | 8.380E+05 | 0.000E+00 | 6.110E+08 | 0.000E+00 | 5.210E+05 |
| ZR-97 | 3.200E-05 | 4.630E-06 | 0.000E+00 | 6.650E-06 | 0.000E+00 | 7.010E-01 | 0.000E+00 | 2.730E-06 |
| NB-95 | 3.100E+06 | 1.210E+06 | 0.000E+00 | 1.130E+06 | 0.000E+00 | 2.230E+09 | 0.000E+00 | 8.620E+05 |
| MO-99 | 0.000E+00 | 1.150E+05 | 0.000E+00 | 2.460E+05 | 0.000E+00 | 9.510E+04 | 0.000E+00 | 2.840E+04 |
| TC-99M | 6.190E-21 | 1.210E-20 | 0.000E+00 | 1.760E-19 | 6.160E-21 | 6.910E-18 | 0.000E+00 | 2.010E-19 |
| TC-101 | 0.000E+00 | 0.000E+00 | 0.000E+00 | 0.000E+00 | 0.000E+00 | 0.000E+00 | 0.000E+00 | 0.000E+00 |
| RU-103 | 1.550E+08 | 0.000E+00 | 0.000E+00 | 3.900E+08 | 0.000E+00 | 4.010E+09 | 0.000E+00 | 5.960E+07 |
| RU-105 | 9.020E-28 | 0.000E+00 | 0.000E+00 | 7.930E-27 | 0.000E+00 | 5.890E-25 | 0.000E+00 | 3.270E-28 |
| RU-106 | 4.440E+09 | 0.000E+00 | 0.000E+00 | 5.990E+09 | 0.000E+00 | 6.900E+10 | 0.000E+00 | 5.540E+08 |
| AG-110M | 8.390E+06 | 5.670E+06 | 0.000E+00 | 1.060E+07 | 0.000E+00 | 6.740E+08 | 0.000E+00 | 4.530E+06 |
| TE-125M | 5.690E+08 | 1.540E+08 | 1.600E+08 | 0.000E+00 | 0.000E+00 | 5.490E+08 | 0.000E+00 | 7.590E+07 |
| TE-127 | 3.380E-10 | 9.120E-11 | 2.340E-10 | 9.630E-10 | 0.000E+00 | 1.320E-08 | 0.000E+00 | 7.260E-11 |
| TE-127M | 1.770E+09 | 4.780E+08 | 4.240E+08 | 5.060E+09 | 0.000E+00 | 1.440E+09 | 0.000E+00 | 2.110E+08 |
| TE-129 | 0.000E+00 | 0.000E+00 | 0.000E+00 | 0.000E+00 | 0.000E+00 | 0.000E+00 | 0.000E+00 | 0.000E+00 |
| TE-129M | 1.790E+09 | 5.000E+08 | 5.770E+08 | 5.260E+09 | 0.000E+00 | 2.180E+09 | 0.000E+00 | 2.780E+08 |
| TE-131 | 0.000E+00 | 0.000E+00 | 0.000E+00 | 0.000E+00 | 0.000E+00 | 0.000E+00 | 0.000E+00 | 0.000E+00 |
| TE-131M | 7.000E+02 | 2.420E+02 | 4.980E+02 | 2.340E+03 | 0.000E+00 | 9.820E+03 | 0.000E+00 | 2.580E+02 |
| TE-132 | 2.120E+06 | 9.380E+05 | 1.370E+06 | 8.710E+06 | 0.000E+00 | 9.450E+06 | 0.000E+00 | 1.130E+06 |
| I-130 | 3.030E-06 | 6.130E-06 | 6.750E-04 | 9.160E-06 | 0.000E+00 | 2.870E-06 | 0.000E+00 | 3.160E-06 |

# APPENDIX I

## $R_i$ Child Dose Factors for use in the Gaseous Dose Calculations

| Agegroup: | CHILD | Pathway: | Grs/Cow/Meat (CMEAT) | | | Units: | $m^2$·mrem/yr / µCi/sec; mrem/yr / µCi/$m^3$ (H-3, C-14) | |
|---|---|---|---|---|---|---|---|---|
| **Nuclide** | **Bone** | **Liver** | **Thyroid** | **Kidney** | **Lung** | **Gilli** | **Skin** | **Total Body** |
| I-131 | 1.650E+07 | 1.660E+07 | 5.500E+09 | 2.730E+07 | 0.000E+00 | 1.480E+06 | 0.000E+00 | 9.460E+06 |
| I-132 | 1.020E-58 | 1.880E-58 | 8.730E-57 | 2.880E-58 | 0.000E+00 | 2.210E-58 | 0.000E+00 | 8.650E-59 |
| I-133 | 5.670E-01 | 7.020E-01 | 1.300E+02 | 1.170E+00 | 0.000E+00 | 2.830E-01 | 0.000E+00 | 2.660E-01 |
| I-134 | 0.000E+00 | 0.000E+00 | 0.000E+00 | 0.000E+00 | 0.000E+00 | 0.000E+00 | 0.000E+00 | 0.000E+00 |
| I-135 | 6.510E-17 | 1.170E-16 | 1.040E-14 | 1.800E-16 | 0.000E+00 | 8.930E-17 | 0.000E+00 | 5.550E-17 |
| CS-134 | 9.220E+08 | 1.510E+09 | 0.000E+00 | 4.690E+08 | 1.680E+08 | 8.160E+06 | 0.000E+00 | 3.190E+08 |
| CS-136 | 1.620E+07 | 4.460E+07 | 0.000E+00 | 2.370E+07 | 3.540E+06 | 1.570E+06 | 0.000E+00 | 2.880E+07 |
| CS-137 | 1.330E+09 | 1.280E+09 | 0.000E+00 | 4.160E+08 | 1.500E+08 | 7.990E+06 | 0.000E+00 | 1.880E+08 |
| CS-138 | 0.000E+00 | 0.000E+00 | 0.000E+00 | 0.000E+00 | 0.000E+00 | 0.000E+00 | 0.000E+00 | 0.000E+00 |
| BA-139 | 0.000E+00 | 0.000E+00 | 0.000E+00 | 0.000E+00 | 0.000E+00 | 0.000E+00 | 0.000E+00 | 0.000E+00 |
| BA-140 | 4.380E+07 | 3.840E+04 | 0.000E+00 | 1.250E+04 | 2.290E+04 | 2.220E+07 | 0.000E+00 | 2.560E+06 |
| BA-141 | 0.000E+00 | 0.000E+00 | 0.000E+00 | 0.000E+00 | 0.000E+00 | 0.000E+00 | 0.000E+00 | 0.000E+00 |
| BA-142 | 0.000E+00 | 0.000E+00 | 0.000E+00 | 0.000E+00 | 0.000E+00 | 0.000E+00 | 0.000E+00 | 0.000E+00 |
| LA-140 | 5.590E-02 | 1.950E-02 | 0.000E+00 | 0.000E+00 | 0.000E+00 | 5.440E+02 | 0.000E+00 | 6.580E-03 |
| LA-142 | 5.300E-92 | 1.690E-92 | 0.000E+00 | 0.000E+00 | 0.000E+00 | 3.350E-87 | 0.000E+00 | 5.290E-93 |
| CE-141 | 2.220E+04 | 1.110E+04 | 0.000E+00 | 4.850E+03 | 0.000E+00 | 1.380E+07 | 0.000E+00 | 1.640E+03 |
| CE-143 | 3.170E-02 | 1.720E+01 | 0.000E+00 | 7.210E-03 | 0.000E+00 | 2.520E+02 | 0.000E+00 | 2.490E-03 |
| CE-144 | 2.320E+06 | 7.260E+05 | 0.000E+00 | 4.020E+05 | 0.000E+00 | 1.890E+08 | 0.000E+00 | 1.240E+05 |
| PR-143 | 3.340E+04 | 1.000E+04 | 0.000E+00 | 5.430E+03 | 0.000E+00 | 3.600E+07 | 0.000E+00 | 1.660E+03 |
| PR-144 | 0.000E+00 | 0.000E+00 | 0.000E+00 | 0.000E+00 | 0.000E+00 | 0.000E+00 | 0.000E+00 | 0.000E+00 |
| ND-147 | 1.170E+04 | 9.470E+03 | 0.000E+00 | 5.190E+03 | 0.000E+00 | 1.500E+07 | 0.000E+00 | 7.330E+02 |
| W-187 | 3.210E-02 | 1.900E-02 | 0.000E+00 | 0.000E+00 | 0.000E+00 | 2.670E+00 | 0.000E+00 | 8.530E-03 |
| NP-239 | 4.260E-01 | 3.060E-02 | 0.000E+00 | 8.850E-02 | 0.000E+00 | 2.260E+03 | 0.000E+00 | 2.150E-02 |

# APPENDIX I

## $R_i$ Child Dose Factors for use in the Gaseous Dose Calculations

| Agegroup: | CHILD | Pathway: | Vegetation (VEG) | | | Units: | $m^2$·mrem/yr / µCi/sec; mrem/yr / µCi/$m^3$ (H-3, C-14) | |
|---|---|---|---|---|---|---|---|---|
| **Nuclide** | **Bone** | **Liver** | **Thyroid** | **Kidney** | **Lung** | **Gilli** | **Skin** | **Total Body** |
| H-3 | 0.000E+00 | 4.010E+03 | 4.010E+03 | 4.010E+03 | 4.010E+03 | 4.010E+03 | 0.000E+00 | 4.010E+03 |
| C-14 | 2.450E+05 | 4.910E+04 | 4.910E+04 | 4.910E+04 | 4.910E+04 | 4.910E+04 | 0.000E+00 | 4.910E+04 |
| NA-24 | 3.730E+05 | 3.730E+05 | 3.730E+05 | 3.730E+05 | 3.730E+05 | 3.730E+05 | 0.000E+00 | 3.730E+05 |
| P-32 | 3.370E+09 | 1.580E+08 | 0.000E+00 | 0.000E+00 | 0.000E+00 | 9.310E+07 | 0.000E+00 | 1.300E+08 |
| CR-51 | 0.000E+00 | 0.000E+00 | 6.500E+04 | 1.780E+04 | 1.190E+05 | 6.210E+06 | 0.000E+00 | 1.170E+05 |
| MN-54 | 0.000E+00 | 6.650E+08 | 0.000E+00 | 1.860E+08 | 0.000E+00 | 5.580E+08 | 0.000E+00 | 1.770E+08 |
| MN-56 | 0.000E+00 | 1.860E+01 | 0.000E+00 | 2.250E+01 | 0.000E+00 | 2.700E+03 | 0.000E+00 | 4.200E+00 |
| FE-55 | 8.010E+08 | 4.250E+08 | 0.000E+00 | 0.000E+00 | 2.400E+08 | 7.870E+07 | 0.000E+00 | 1.320E+08 |
| FE-59 | 3.980E+08 | 6.430E+08 | 0.000E+00 | 0.000E+00 | 1.860E+08 | 6.700E+08 | 0.000E+00 | 3.200E+08 |
| CO-58 | 0.000E+00 | 6.440E+07 | 0.000E+00 | 0.000E+00 | 0.000E+00 | 3.760E+08 | 0.000E+00 | 1.970E+08 |
| CO-60 | 0.000E+00 | 3.780E+08 | 0.000E+00 | 0.000E+00 | 0.000E+00 | 2.100E+09 | 0.000E+00 | 1.120E+09 |
| NI-63 | 3.950E+10 | 2.110E+09 | 0.000E+00 | 0.000E+00 | 0.000E+00 | 1.420E+08 | 0.000E+00 | 1.340E+09 |
| NI-65 | 1.050E+02 | 9.890E+00 | 0.000E+00 | 0.000E+00 | 0.000E+00 | 1.210E+03 | 0.000E+00 | 5.770E+00 |
| CU-64 | 0.000E+00 | 1.100E+04 | 0.000E+00 | 2.660E+04 | 0.000E+00 | 5.160E+05 | 0.000E+00 | 6.640E+03 |
| ZN-65 | 8.130E+08 | 2.160E+09 | 0.000E+00 | 1.360E+09 | 0.000E+00 | 3.800E+08 | 0.000E+00 | 1.350E+09 |
| ZN-69 | 9.490E-06 | 1.370E-05 | 0.000E+00 | 8.320E-06 | 0.000E+00 | 8.640E-04 | 0.000E+00 | 1.270E-06 |
| BR-83 | 0.000E+00 | 0.000E+00 | 0.000E+00 | 0.000E+00 | 0.000E+00 | 0.000E+00 | 0.000E+00 | 5.370E+00 |
| BR-84 | 0.000E+00 | 0.000E+00 | 0.000E+00 | 0.000E+00 | 0.000E+00 | 0.000E+00 | 0.000E+00 | 3.820E-11 |
| BR-85 | 0.000E+00 | 0.000E+00 | 0.000E+00 | 0.000E+00 | 0.000E+00 | 0.000E+00 | 0.000E+00 | 0.000E+00 |
| RB-86 | 0.000E+00 | 4.520E+08 | 0.000E+00 | 0.000E+00 | 0.000E+00 | 2.910E+07 | 0.000E+00 | 2.780E+08 |
| RB-88 | 0.000E+00 | 4.380E-22 | 0.000E+00 | 0.000E+00 | 0.000E+00 | 2.150E-23 | 0.000E+00 | 3.040E-22 |
| RB-89 | 0.000E+00 | 4.610E-26 | 0.000E+00 | 0.000E+00 | 0.000E+00 | 4.020E-28 | 0.000E+00 | 4.090E-26 |
| SR-89 | 3.600E+10 | 0.000E+00 | 0.000E+00 | 0.000E+00 | 0.000E+00 | 1.390E+09 | 0.000E+00 | 1.030E+09 |
| SR-90 | 1.240E+12 | 0.000E+00 | 0.000E+00 | 0.000E+00 | 0.000E+00 | 1.670E+10 | 0.000E+00 | 3.150E+11 |
| SR-91 | 5.240E+05 | 0.000E+00 | 0.000E+00 | 0.000E+00 | 0.000E+00 | 1.160E+06 | 0.000E+00 | 1.980E+04 |

# APPENDIX I

## $R_i$ Child Dose Factors for use in the Gaseous Dose Calculations

| Agegroup: | CHILD | Pathway: | Vegetation (VEG) | | | Units: | $m^2$·mrem/yr / µCi/sec; mrem/yr / µCi/$m^3$ (H-3, C-14) | |
|---|---|---|---|---|---|---|---|---|
| **Nuclide** | **Bone** | **Liver** | **Thyroid** | **Kidney** | **Lung** | **Gilli** | **Skin** | **Total Body** |
| SR-92 | 7.280E+02 | 0.000E+00 | 0.000E+00 | 0.000E+00 | 0.000E+00 | 1.380E+04 | 0.000E+00 | 2.920E+01 |
| Y-90 | 2.310E+04 | 0.000E+00 | 0.000E+00 | 0.000E+00 | 0.000E+00 | 6.570E+07 | 0.000E+00 | 6.180E+02 |
| Y-91 | 1.860E+07 | 0.000E+00 | 0.000E+00 | 0.000E+00 | 0.000E+00 | 2.480E+09 | 0.000E+00 | 4.990E+05 |
| Y-91M | 8.910E-09 | 0.000E+00 | 0.000E+00 | 0.000E+00 | 0.000E+00 | 1.740E-05 | 0.000E+00 | 3.240E-10 |
| Y-92 | 1.580E+00 | 0.000E+00 | 0.000E+00 | 0.000E+00 | 0.000E+00 | 4.580E+04 | 0.000E+00 | 4.530E-02 |
| Y-93 | 2.930E+02 | 0.000E+00 | 0.000E+00 | 0.000E+00 | 0.000E+00 | 4.370E+06 | 0.000E+00 | 8.040E+00 |
| ZR-95 | 3.860E+06 | 8.480E+05 | 0.000E+00 | 1.210E+06 | 0.000E+00 | 8.850E+08 | 0.000E+00 | 7.550E+05 |
| ZR-97 | 5.700E+02 | 8.240E+01 | 0.000E+00 | 1.180E+02 | 0.000E+00 | 1.250E+07 | 0.000E+00 | 4.860E+01 |
| NB-95 | 4.110E+05 | 1.600E+05 | 0.000E+00 | 1.500E+05 | 0.000E+00 | 2.960E+08 | 0.000E+00 | 1.140E+05 |
| MO-99 | 0.000E+00 | 7.710E+06 | 0.000E+00 | 1.650E+07 | 0.000E+00 | 6.380E+06 | 0.000E+00 | 1.910E+06 |
| TC-99M | 4.710E+00 | 9.230E+00 | 0.000E+00 | 1.340E+02 | 4.690E+00 | 5.260E+03 | 0.000E+00 | 1.530E+02 |
| TC-101 | 1.410E-30 | 1.470E-30 | 0.000E+00 | 2.510E-29 | 7.780E-31 | 4.680E-30 | 0.000E+00 | 1.870E-29 |
| RU-103 | 1.530E+07 | 0.000E+00 | 0.000E+00 | 3.860E+07 | 0.000E+00 | 3.970E+08 | 0.000E+00 | 5.900E+06 |
| RU-105 | 9.160E+01 | 0.000E+00 | 0.000E+00 | 8.050E+02 | 0.000E+00 | 5.980E+04 | 0.000E+00 | 3.320E+01 |
| RU-106 | 7.450E+08 | 0.000E+00 | 0.000E+00 | 1.010E+09 | 0.000E+00 | 1.160E+10 | 0.000E+00 | 9.300E+07 |
| AG-110M | 3.210E+07 | 2.170E+07 | 0.000E+00 | 4.040E+07 | 0.000E+00 | 2.580E+09 | 0.000E+00 | 1.730E+07 |
| TE-125M | 3.510E+08 | 9.500E+07 | 9.840E+07 | 0.000E+00 | 0.000E+00 | 3.380E+08 | 0.000E+00 | 4.670E+07 |
| TE-127 | 9.850E+03 | 2.650E+03 | 6.810E+03 | 2.800E+04 | 0.000E+00 | 3.850E+05 | 0.000E+00 | 2.110E+03 |
| TE-127M | 1.320E+09 | 3.560E+08 | 3.160E+08 | 3.770E+09 | 0.000E+00 | 1.070E+09 | 0.000E+00 | 1.570E+08 |
| TE-129 | 1.320E-03 | 3.690E-04 | 9.430E-04 | 3.870E-03 | 0.000E+00 | 8.230E-02 | 0.000E+00 | 3.140E-04 |
| TE-129M | 8.410E+08 | 2.350E+08 | 2.710E+08 | 2.470E+09 | 0.000E+00 | 1.030E+09 | 0.000E+00 | 1.310E+08 |
| TE-131 | 2.570E-15 | 7.830E-16 | 1.960E-15 | 7.770E-15 | 0.000E+00 | 1.350E-14 | 0.000E+00 | 7.640E-16 |
| TE-131M | 1.540E+06 | 5.330E+05 | 1.100E+06 | 5.160E+06 | 0.000E+00 | 2.160E+07 | 0.000E+00 | 5.680E+05 |
| TE-132 | 7.000E+06 | 3.100E+06 | 4.510E+06 | 2.880E+07 | 0.000E+00 | 3.120E+07 | 0.000E+00 | 3.740E+06 |
| I-130 | 6.160E+05 | 1.240E+06 | 1.370E+08 | 1.860E+06 | 0.000E+00 | 5.820E+05 | 0.000E+00 | 6.410E+05 |

# APPENDIX I

## $R_i$ Child Dose Factors for use in the Gaseous Dose Calculations

| Agegroup: | CHILD | Pathway: | Vegetation (VEG) | | | Units: | $m^2$·mrem/yr / µCi/sec; mrem/yr / µCi/$m^3$ (H-3, C-14) | |
|---|---|---|---|---|---|---|---|---|
| **Nuclide** | **Bone** | **Liver** | **Thyroid** | **Kidney** | **Lung** | **Gilli** | **Skin** | **Total Body** |
| I-131 | 1.430E+08 | 1.440E+08 | 4.750E+10 | 2.360E+08 | 0.000E+00 | 1.280E+07 | 0.000E+00 | 8.170E+07 |
| I-132 | 9.220E+01 | 1.690E+02 | 7.860E+03 | 2.590E+02 | 0.000E+00 | 1.990E+02 | 0.000E+00 | 7.790E+01 |
| I-133 | 3.530E+06 | 4.370E+06 | 8.110E+08 | 7.280E+06 | 0.000E+00 | 1.760E+06 | 0.000E+00 | 1.650E+06 |
| I-134 | 1.550E-04 | 2.880E-04 | 6.620E-03 | 4.400E-04 | 0.000E+00 | 1.910E-04 | 0.000E+00 | 1.320E-04 |
| I-135 | 6.260E+04 | 1.130E+05 | 9.970E+06 | 1.730E+05 | 0.000E+00 | 8.580E+04 | 0.000E+00 | 5.330E+04 |
| CS-134 | 1.600E+10 | 2.630E+10 | 0.000E+00 | 8.150E+09 | 2.930E+09 | 1.420E+08 | 0.000E+00 | 5.550E+09 |
| CS-136 | 8.240E+07 | 2.270E+08 | 0.000E+00 | 1.210E+08 | 1.800E+07 | 7.960E+06 | 0.000E+00 | 1.470E+08 |
| CS-137 | 2.390E+10 | 2.290E+10 | 0.000E+00 | 7.460E+09 | 2.680E+09 | 1.430E+08 | 0.000E+00 | 3.380E+09 |
| CS-138 | 6.570E-11 | 9.130E-11 | 0.000E+00 | 6.430E-11 | 6.920E-12 | 4.210E-11 | 0.000E+00 | 5.790E-11 |
| BA-139 | 4.950E-02 | 2.640E-05 | 0.000E+00 | 2.310E-05 | 1.560E-05 | 2.860E+00 | 0.000E+00 | 1.440E-03 |
| BA-140 | 2.770E+08 | 2.420E+05 | 0.000E+00 | 7.890E+04 | 1.450E+05 | 1.400E+08 | 0.000E+00 | 1.610E+07 |
| BA-141 | 1.990E-21 | 1.110E-24 | 0.000E+00 | 9.620E-25 | 6.530E-24 | 1.130E-21 | 0.000E+00 | 6.460E-23 |
| BA-142 | 9.930E-39 | 7.150E-42 | 0.000E+00 | 5.780E-42 | 4.200E-42 | 1.300E-40 | 0.000E+00 | 5.540E-40 |
| LA-140 | 3.250E+03 | 1.130E+03 | 0.000E+00 | 0.000E+00 | 0.000E+00 | 3.160E+07 | 0.000E+00 | 3.820E+02 |
| LA-142 | 3.360E-04 | 1.070E-04 | 0.000E+00 | 0.000E+00 | 0.000E+00 | 2.120E+01 | 0.000E+00 | 3.350E-05 |
| CE-141 | 6.560E+05 | 3.270E+05 | 0.000E+00 | 1.430E+05 | 0.000E+00 | 4.080E+08 | 0.000E+00 | 4.860E+04 |
| CE-143 | 1.720E+03 | 9.310E+05 | 0.000E+00 | 3.910E+02 | 0.000E+00 | 1.360E+07 | 0.000E+00 | 1.350E+02 |
| CE-144 | 1.270E+08 | 3.980E+07 | 0.000E+00 | 2.210E+07 | 0.000E+00 | 1.040E+10 | 0.000E+00 | 6.780E+06 |
| PR-143 | 1.460E+05 | 4.370E+04 | 0.000E+00 | 2.370E+04 | 0.000E+00 | 1.570E+08 | 0.000E+00 | 7.230E+03 |
| PR-144 | 5.380E-26 | 1.660E-26 | 0.000E+00 | 8.800E-27 | 0.000E+00 | 3.580E-23 | 0.000E+00 | 2.710E-27 |
| ND-147 | 7.150E+04 | 5.790E+04 | 0.000E+00 | 3.180E+04 | 0.000E+00 | 9.170E+07 | 0.000E+00 | 4.480E+03 |
| W-187 | 6.430E+04 | 3.810E+04 | 0.000E+00 | 0.000E+00 | 0.000E+00 | 5.350E+06 | 0.000E+00 | 1.710E+04 |
| NP-239 | 2.560E+03 | 1.840E+02 | 0.000E+00 | 5.310E+02 | 0.000E+00 | 1.360E+07 | 0.000E+00 | 1.290E+02 |

# APPENDIX I

## $R_i$ Child Dose Factors for use in the Gaseous Dose Calculations

| Agegroup: | CHILD | Pathway: | Inhalation (INHL) | | | Units: | mrem/yr / µCi/m$^3$ | |
|---|---|---|---|---|---|---|---|---|
| **Nuclide** | **Bone** | **Liver** | **Thyroid** | **Kidney** | **Lung** | **Gilli** | **Skin** | **Total Body** |
| H-3 | 0.000E+00 | 1.120E+03 | 1.120E+03 | 1.120E+03 | 1.120E+03 | 1.120E+03 | 0.000E+00 | 1.120E+03 |
| C-14 | 3.590E+04 | 6.730E+03 | 6.730E+03 | 6.730E+03 | 6.730E+03 | 6.730E+03 | 0.000E+00 | 6.730E+03 |
| NA-24 | 1.610E+04 | 1.610E+04 | 1.610E+04 | 1.610E+04 | 1.610E+04 | 1.610E+04 | 0.000E+00 | 1.610E+04 |
| P-32 | 2.600E+06 | 1.140E+05 | 0.000E+00 | 0.000E+00 | 0.000E+00 | 4.220E+04 | 0.000E+00 | 9.880E+04 |
| CR-51 | 0.000E+00 | 0.000E+00 | 8.550E+01 | 2.430E+01 | 1.700E+04 | 1.080E+03 | 0.000E+00 | 1.540E+02 |
| MN-54 | 0.000E+00 | 4.290E+04 | 0.000E+00 | 1.000E+04 | 1.580E+06 | 2.290E+04 | 0.000E+00 | 9.510E+03 |
| MN-56 | 0.000E+00 | 1.660E+00 | 0.000E+00 | 1.670E+00 | 1.310E+04 | 1.230E+05 | 0.000E+00 | 3.120E-01 |
| FE-55 | 4.740E+04 | 2.520E+04 | 0.000E+00 | 0.000E+00 | 1.110E+05 | 2.870E+03 | 0.000E+00 | 7.770E+03 |
| FE-59 | 2.070E+04 | 3.340E+04 | 0.000E+00 | 0.000E+00 | 1.270E+06 | 7.070E+04 | 0.000E+00 | 1.670E+04 |
| CO-58 | 0.000E+00 | 1.770E+03 | 0.000E+00 | 0.000E+00 | 1.110E+06 | 3.440E+04 | 0.000E+00 | 3.160E+03 |
| CO-60 | 0.000E+00 | 1.310E+04 | 0.000E+00 | 0.000E+00 | 7.070E+06 | 9.620E+04 | 0.000E+00 | 2.260E+04 |
| NI-63 | 8.210E+05 | 4.620E+04 | 0.000E+00 | 0.000E+00 | 2.750E+05 | 6.330E+03 | 0.000E+00 | 2.800E+04 |
| NI-65 | 2.990E+00 | 2.960E-01 | 0.000E+00 | 0.000E+00 | 8.180E+03 | 8.400E+04 | 0.000E+00 | 1.640E-01 |
| CU-64 | 0.000E+00 | 1.990E+00 | 0.000E+00 | 6.030E+00 | 9.580E+03 | 3.670E+04 | 0.000E+00 | 1.070E+00 |
| ZN-65 | 4.260E+04 | 1.130E+05 | 0.000E+00 | 7.140E+04 | 9.950E+05 | 1.630E+04 | 0.000E+00 | 7.030E+04 |
| ZN-69 | 6.700E-02 | 9.660E-02 | 0.000E+00 | 5.850E-02 | 1.420E+03 | 1.020E+04 | 0.000E+00 | 8.920E-03 |
| BR-83 | 0.000E+00 | 0.000E+00 | 0.000E+00 | 0.000E+00 | 0.000E+00 | 0.000E+00 | 0.000E+00 | 4.740E+02 |
| BR-84 | 0.000E+00 | 0.000E+00 | 0.000E+00 | 0.000E+00 | 0.000E+00 | 0.000E+00 | 0.000E+00 | 5.480E+02 |
| BR-85 | 0.000E+00 | 0.000E+00 | 0.000E+00 | 0.000E+00 | 0.000E+00 | 0.000E+00 | 0.000E+00 | 2.530E+01 |
| RB-86 | 0.000E+00 | 1.980E+05 | 0.000E+00 | 0.000E+00 | 0.000E+00 | 7.990E+03 | 0.000E+00 | 1.140E+05 |
| RB-88 | 0.000E+00 | 5.620E+02 | 0.000E+00 | 0.000E+00 | 0.000E+00 | 1.720E+01 | 0.000E+00 | 3.660E+02 |
| RB-89 | 0.000E+00 | 3.450E+02 | 0.000E+00 | 0.000E+00 | 0.000E+00 | 1.890E+00 | 0.000E+00 | 2.900E+02 |
| SR-89 | 5.990E+05 | 0.000E+00 | 0.000E+00 | 0.000E+00 | 2.160E+06 | 1.670E+05 | 0.000E+00 | 1.720E+04 |
| SR-90 | 1.010E+08 | 0.000E+00 | 0.000E+00 | 0.000E+00 | 1.480E+07 | 3.430E+05 | 0.000E+00 | 6.440E+06 |
| SR-91 | 1.210E+02 | 0.000E+00 | 0.000E+00 | 0.000E+00 | 5.330E+04 | 1.740E+05 | 0.000E+00 | 4.590E+00 |

# APPENDIX I

## $R_i$ Child Dose Factors for use in the Gaseous Dose Calculations

| Agegroup: | CHILD | Pathway: | Inhalation (INHL) | | | Units: | mrem/yr / µCi/m$^3$ | |
|---|---|---|---|---|---|---|---|---|
| **Nuclide** | **Bone** | **Liver** | **Thyroid** | **Kidney** | **Lung** | **Gilli** | **Skin** | **Total Body** |
| SR-92 | 1.310E+01 | 0.000E+00 | 0.000E+00 | 0.000E+00 | 2.400E+04 | 2.420E+05 | 0.000E+00 | 5.250E-01 |
| Y-90 | 4.110E+03 | 0.000E+00 | 0.000E+00 | 0.000E+00 | 2.620E+05 | 2.680E+05 | 0.000E+00 | 1.110E+02 |
| Y-91 | 9.140E+05 | 0.000E+00 | 0.000E+00 | 0.000E+00 | 2.630E+06 | 1.840E+05 | 0.000E+00 | 2.440E+04 |
| Y-91M | 5.070E-01 | 0.000E+00 | 0.000E+00 | 0.000E+00 | 2.810E+03 | 1.720E+03 | 0.000E+00 | 1.840E-02 |
| Y-92 | 2.030E+01 | 0.000E+00 | 0.000E+00 | 0.000E+00 | 2.390E+04 | 2.390E+05 | 0.000E+00 | 5.810E-01 |
| Y-93 | 1.860E+02 | 0.000E+00 | 0.000E+00 | 0.000E+00 | 7.440E+04 | 3.880E+05 | 0.000E+00 | 5.110E+00 |
| ZR-95 | 1.900E+05 | 4.180E+04 | 0.000E+00 | 5.960E+04 | 2.230E+06 | 6.110E+04 | 0.000E+00 | 3.700E+04 |
| ZR-97 | 1.880E+02 | 2.720E+01 | 0.000E+00 | 3.880E+01 | 1.130E+05 | 3.510E+05 | 0.000E+00 | 1.600E+01 |
| NB-95 | 2.350E+04 | 9.180E+03 | 0.000E+00 | 8.620E+03 | 6.140E+05 | 3.700E+04 | 0.000E+00 | 6.550E+03 |
| MO-99 | 0.000E+00 | 1.720E+02 | 0.000E+00 | 3.920E+02 | 1.350E+05 | 1.270E+05 | 0.000E+00 | 4.260E+01 |
| TC-99M | 1.780E-03 | 3.480E-03 | 0.000E+00 | 5.070E-02 | 9.510E+02 | 4.810E+03 | 0.000E+00 | 5.770E-02 |
| TC-101 | 8.100E-05 | 8.510E-05 | 0.000E+00 | 1.450E-03 | 5.850E+02 | 1.630E+01 | 0.000E+00 | 1.080E-03 |
| RU-103 | 2.790E+03 | 0.000E+00 | 0.000E+00 | 7.030E+03 | 6.620E+05 | 4.480E+04 | 0.000E+00 | 1.070E+03 |
| RU-105 | 1.530E+00 | 0.000E+00 | 0.000E+00 | 1.340E+00 | 1.590E+04 | 9.950E+04 | 0.000E+00 | 5.550E-01 |
| RU-106 | 1.360E+05 | 0.000E+00 | 0.000E+00 | 1.840E+05 | 1.430E+07 | 4.290E+05 | 0.000E+00 | 1.690E+04 |
| AG-110M | 1.690E+04 | 1.140E+04 | 0.000E+00 | 2.120E+04 | 5.480E+06 | 1.000E+05 | 0.000E+00 | 9.140E+03 |
| TE-125M | 6.730E+03 | 2.330E+03 | 1.920E+03 | 0.000E+00 | 4.770E+05 | 3.380E+04 | 0.000E+00 | 9.140E+02 |
| TE-127 | 2.770E+00 | 9.510E-01 | 1.960E+00 | 7.070E+00 | 1.000E+04 | 5.620E+04 | 0.000E+00 | 6.100E-01 |
| TE-127M | 2.490E+04 | 8.550E+03 | 6.070E+03 | 6.360E+04 | 1.480E+06 | 7.140E+04 | 0.000E+00 | 3.020E+03 |
| TE-129 | 9.770E-02 | 3.500E-02 | 7.140E-02 | 2.570E-01 | 2.930E+03 | 2.550E+04 | 0.000E+00 | 2.380E-02 |
| TE-129M | 1.920E+04 | 6.840E+03 | 6.330E+03 | 5.030E+04 | 1.760E+06 | 1.820E+05 | 0.000E+00 | 3.040E+03 |
| TE-131 | 2.170E-02 | 8.440E-03 | 1.700E-02 | 5.880E-02 | 2.050E+03 | 1.330E+03 | 0.000E+00 | 6.590E-03 |
| TE-131M | 1.340E+02 | 5.920E+01 | 9.770E+01 | 4.000E+02 | 2.060E+05 | 3.080E+05 | 0.000E+00 | 5.070E+01 |
| TE-132 | 4.810E+02 | 2.720E+02 | 3.170E+02 | 1.770E+03 | 3.770E+05 | 1.380E+05 | 0.000E+00 | 2.630E+02 |
| I-130 | 8.180E+03 | 1.640E+04 | 1.850E+06 | 2.450E+04 | 0.000E+00 | 5.110E+03 | 0.000E+00 | 8.440E+03 |

# APPENDIX I

## $R_i$ Child Dose Factors for use in the Gaseous Dose Calculations

| Agegroup: | CHILD | Pathway: | Inhalation (INHL) | | | Units: | mrem/yr / µCi/m$^3$ | |
|---|---|---|---|---|---|---|---|---|
| **Nuclide** | **Bone** | **Liver** | **Thyroid** | **Kidney** | **Lung** | **Gilli** | **Skin** | **Total Body** |
| I-131 | 4.810E+04 | 4.810E+04 | 1.620E+07 | 7.880E+04 | 0.000E+00 | 2.840E+03 | 0.000E+00 | 2.730E+04 |
| I-132 | 2.120E+03 | 4.070E+03 | 1.940E+05 | 6.250E+03 | 0.000E+00 | 3.200E+03 | 0.000E+00 | 1.880E+03 |
| I-133 | 1.660E+04 | 2.030E+04 | 3.850E+06 | 3.380E+04 | 0.000E+00 | 5.480E+03 | 0.000E+00 | 7.700E+03 |
| I-134 | 1.170E+03 | 2.160E+03 | 5.070E+04 | 3.300E+03 | 0.000E+00 | 9.550E+02 | 0.000E+00 | 9.950E+02 |
| I-135 | 4.920E+03 | 8.730E+03 | 7.920E+05 | 1.340E+04 | 0.000E+00 | 4.440E+03 | 0.000E+00 | 4.140E+03 |
| CS-134 | 6.510E+05 | 1.010E+06 | 0.000E+00 | 3.300E+05 | 1.210E+05 | 3.850E+03 | 0.000E+00 | 2.250E+05 |
| CS-136 | 6.510E+04 | 1.710E+05 | 0.000E+00 | 9.550E+04 | 1.450E+04 | 4.180E+03 | 0.000E+00 | 1.160E+05 |
| CS-137 | 9.060E+05 | 8.250E+05 | 0.000E+00 | 2.820E+05 | 1.040E+05 | 3.620E+03 | 0.000E+00 | 1.280E+05 |
| CS-138 | 6.330E+02 | 8.400E+02 | 0.000E+00 | 6.220E+02 | 6.810E+01 | 2.700E+02 | 0.000E+00 | 5.550E+02 |
| BA-139 | 1.840E+00 | 9.840E-04 | 0.000E+00 | 8.620E-04 | 5.770E+03 | 5.770E+04 | 0.000E+00 | 5.360E-02 |
| BA-140 | 7.400E+04 | 6.480E+01 | 0.000E+00 | 2.110E+01 | 1.740E+06 | 1.020E+05 | 0.000E+00 | 4.330E+03 |
| BA-141 | 1.960E-01 | 1.090E-04 | 0.000E+00 | 9.470E-05 | 2.920E+03 | 2.750E+02 | 0.000E+00 | 6.360E-03 |
| BA-142 | 5.000E-02 | 3.600E-05 | 0.000E+00 | 2.910E-05 | 1.640E+03 | 2.740E+00 | 0.000E+00 | 2.790E-03 |
| LA-140 | 6.440E+02 | 2.250E+02 | 0.000E+00 | 0.000E+00 | 1.830E+05 | 2.260E+05 | 0.000E+00 | 7.550E+01 |
| LA-142 | 1.300E+00 | 4.110E-01 | 0.000E+00 | 0.000E+00 | 8.700E+03 | 7.580E+04 | 0.000E+00 | 1.290E-01 |
| CE-141 | 3.920E+04 | 1.950E+04 | 0.000E+00 | 8.550E+03 | 5.440E+05 | 5.660E+04 | 0.000E+00 | 2.900E+03 |
| CE-143 | 3.660E+02 | 1.990E+02 | 0.000E+00 | 8.360E+01 | 1.150E+05 | 1.270E+05 | 0.000E+00 | 2.870E+01 |
| CE-144 | 6.770E+06 | 2.120E+06 | 0.000E+00 | 1.170E+06 | 1.200E+07 | 3.880E+05 | 0.000E+00 | 3.610E+05 |
| PR-143 | 1.850E+04 | 5.550E+03 | 0.000E+00 | 3.000E+03 | 4.330E+05 | 9.730E+04 | 0.000E+00 | 9.140E+02 |
| PR-144 | 5.960E-02 | 1.850E-02 | 0.000E+00 | 9.770E-03 | 1.570E+03 | 1.970E+02 | 0.000E+00 | 3.000E-03 |
| ND-147 | 1.080E+04 | 8.730E+03 | 0.000E+00 | 4.810E+03 | 3.280E+05 | 8.210E+04 | 0.000E+00 | 6.810E+02 |
| W-187 | 1.630E+01 | 9.660E+00 | 0.000E+00 | 0.000E+00 | 4.110E+04 | 9.100E+04 | 0.000E+00 | 4.330E+00 |
| NP-239 | 4.660E+02 | 3.340E+01 | 0.000E+00 | 9.730E+01 | 5.810E+04 | 6.400E+04 | 0.000E+00 | 2.350E+01 |

# APPENDIX I

## $R_i$ Child Dose Factors for use in the Gaseous Dose Calculations

| Agegroup: | CHILD | Pathway: | Ground Plane Deposition (GPD) | | | Units: | $m^2$·mrem/yr / µCi/sec | |
|---|---|---|---|---|---|---|---|---|
| **Nuclide** | **Bone** | **Liver** | **Thyroid** | **Kidney** | **Lung** | **Gilli** | **Skin** | **Total Body** |
| H-3 | 0.000E+00 | 0.000E+00 | 0.000E+00 | 0.000E+00 | 0.000E+00 | 0.000E+00 | 0.000E+00 | 0.000E+00 |
| C-14 | 0.000E+00 | 0.000E+00 | 0.000E+00 | 0.000E+00 | 0.000E+00 | 0.000E+00 | 0.000E+00 | 0.000E+00 |
| NA-24 | 1.190E+07 | 1.190E+07 | 1.190E+07 | 1.190E+07 | 1.190E+07 | 1.190E+07 | 1.390E+07 | 1.190E+07 |
| P-32 | 0.000E+00 | 0.000E+00 | 0.000E+00 | 0.000E+00 | 0.000E+00 | 0.000E+00 | 0.000E+00 | 0.000E+00 |
| CR-51 | 4.660E+06 | 4.660E+06 | 4.660E+06 | 4.660E+06 | 4.660E+06 | 4.660E+06 | 5.510E+06 | 4.660E+06 |
| MN-54 | 1.390E+09 | 1.390E+09 | 1.390E+09 | 1.390E+09 | 1.390E+09 | 1.390E+09 | 1.630E+09 | 1.390E+09 |
| MN-56 | 9.020E+05 | 9.020E+05 | 9.020E+05 | 9.020E+05 | 9.020E+05 | 9.020E+05 | 1.070E+06 | 9.020E+05 |
| FE-55 | 0.000E+00 | 0.000E+00 | 0.000E+00 | 0.000E+00 | 0.000E+00 | 0.000E+00 | 0.000E+00 | 0.000E+00 |
| FE-59 | 2.730E+08 | 2.730E+08 | 2.730E+08 | 2.730E+08 | 2.730E+08 | 2.730E+08 | 3.210E+08 | 2.730E+08 |
| CO-58 | 3.790E+08 | 3.790E+08 | 3.790E+08 | 3.790E+08 | 3.790E+08 | 3.790E+08 | 4.440E+08 | 3.790E+08 |
| CO-60 | 2.150E+10 | 2.150E+10 | 2.150E+10 | 2.150E+10 | 2.150E+10 | 2.150E+10 | 2.530E+10 | 2.150E+10 |
| NI-63 | 0.000E+00 | 0.000E+00 | 0.000E+00 | 0.000E+00 | 0.000E+00 | 0.000E+00 | 0.000E+00 | 0.000E+00 |
| NI-65 | 2.970E+05 | 2.970E+05 | 2.970E+05 | 2.970E+05 | 2.970E+05 | 2.970E+05 | 3.450E+05 | 2.970E+05 |
| CU-64 | 6.070E+05 | 6.070E+05 | 6.070E+05 | 6.070E+05 | 6.070E+05 | 6.070E+05 | 6.880E+05 | 6.070E+05 |
| ZN-65 | 7.470E+08 | 7.470E+08 | 7.470E+08 | 7.470E+08 | 7.470E+08 | 7.470E+08 | 8.590E+08 | 7.470E+08 |
| ZN-69 | 0.000E+00 | 0.000E+00 | 0.000E+00 | 0.000E+00 | 0.000E+00 | 0.000E+00 | 0.000E+00 | 0.000E+00 |
| BR-83 | 4.870E+03 | 4.870E+03 | 4.870E+03 | 4.870E+03 | 4.870E+03 | 4.870E+03 | 7.080E+03 | 4.870E+03 |
| BR-84 | 2.030E+05 | 2.030E+05 | 2.030E+05 | 2.030E+05 | 2.030E+05 | 2.030E+05 | 2.360E+05 | 2.030E+05 |
| BR-85 | 0.000E+00 | 0.000E+00 | 0.000E+00 | 0.000E+00 | 0.000E+00 | 0.000E+00 | 0.000E+00 | 0.000E+00 |
| RB-86 | 8.990E+06 | 8.990E+06 | 8.990E+06 | 8.990E+06 | 8.990E+06 | 8.990E+06 | 1.030E+07 | 8.990E+06 |
| RB-88 | 3.310E+04 | 3.310E+04 | 3.310E+04 | 3.310E+04 | 3.310E+04 | 3.310E+04 | 3.780E+04 | 3.310E+04 |
| RB-89 | 1.230E+05 | 1.230E+05 | 1.230E+05 | 1.230E+05 | 1.230E+05 | 1.230E+05 | 1.480E+05 | 1.230E+05 |
| SR-89 | 2.160E+04 | 2.160E+04 | 2.160E+04 | 2.160E+04 | 2.160E+04 | 2.160E+04 | 2.510E+04 | 2.160E+04 |
| SR-90 | 0.000E+00 | 0.000E+00 | 0.000E+00 | 0.000E+00 | 0.000E+00 | 0.000E+00 | 0.000E+00 | 0.000E+00 |
| SR-91 | 2.150E+06 | 2.150E+06 | 2.150E+06 | 2.150E+06 | 2.150E+06 | 2.150E+06 | 2.510E+06 | 2.150E+06 |

# APPENDIX I

## $R_i$ Child Dose Factors for use in the Gaseous Dose Calculations

| Agegroup: | CHILD | Pathway: | Ground Plane Deposition (GPD) | | | Units: | $m^2$·mrem/yr / µCi/sec | |
|---|---|---|---|---|---|---|---|---|
| **Nuclide** | **Bone** | **Liver** | **Thyroid** | **Kidney** | **Lung** | **Gilli** | **Skin** | **Total Body** |
| SR-92 | 7.770E+05 | 7.770E+05 | 7.770E+05 | 7.770E+05 | 7.770E+05 | 7.770E+05 | 8.630E+05 | 7.770E+05 |
| Y-90 | 4.490E+03 | 4.490E+03 | 4.490E+03 | 4.490E+03 | 4.490E+03 | 4.490E+03 | 5.310E+03 | 4.490E+03 |
| Y-91 | 1.070E+06 | 1.070E+06 | 1.070E+06 | 1.070E+06 | 1.070E+06 | 1.070E+06 | 1.210E+06 | 1.070E+06 |
| Y-91M | 1.000E+05 | 1.000E+05 | 1.000E+05 | 1.000E+05 | 1.000E+05 | 1.000E+05 | 1.160E+05 | 1.000E+05 |
| Y-92 | 1.800E+05 | 1.800E+05 | 1.800E+05 | 1.800E+05 | 1.800E+05 | 1.800E+05 | 2.140E+05 | 1.800E+05 |
| Y-93 | 1.830E+05 | 1.830E+05 | 1.830E+05 | 1.830E+05 | 1.830E+05 | 1.830E+05 | 2.510E+05 | 1.830E+05 |
| ZR-95 | 2.450E+08 | 2.450E+08 | 2.450E+08 | 2.450E+08 | 2.450E+08 | 2.450E+08 | 2.840E+08 | 2.450E+08 |
| ZR-97 | 2.960E+06 | 2.960E+06 | 2.960E+06 | 2.960E+06 | 2.960E+06 | 2.960E+06 | 3.440E+06 | 2.960E+06 |
| NB-95 | 1.370E+08 | 1.370E+08 | 1.370E+08 | 1.370E+08 | 1.370E+08 | 1.370E+08 | 1.610E+08 | 1.370E+08 |
| MO-99 | 3.990E+06 | 3.990E+06 | 3.990E+06 | 3.990E+06 | 3.990E+06 | 3.990E+06 | 4.630E+06 | 3.990E+06 |
| TC-99M | 1.840E+05 | 1.840E+05 | 1.840E+05 | 1.840E+05 | 1.840E+05 | 1.840E+05 | 2.110E+05 | 1.840E+05 |
| TC-101 | 2.040E+04 | 2.040E+04 | 2.040E+04 | 2.040E+04 | 2.040E+04 | 2.040E+04 | 2.260E+04 | 2.040E+04 |
| RU-103 | 1.080E+08 | 1.080E+08 | 1.080E+08 | 1.080E+08 | 1.080E+08 | 1.080E+08 | 1.260E+08 | 1.080E+08 |
| RU-105 | 6.360E+05 | 6.360E+05 | 6.360E+05 | 6.360E+05 | 6.360E+05 | 6.360E+05 | 7.210E+05 | 6.360E+05 |
| RU-106 | 4.220E+08 | 4.220E+08 | 4.220E+08 | 4.220E+08 | 4.220E+08 | 4.220E+08 | 5.070E+08 | 4.220E+08 |
| AG-110M | 3.440E+09 | 3.440E+09 | 3.440E+09 | 3.440E+09 | 3.440E+09 | 3.440E+09 | 4.010E+09 | 3.440E+09 |
| TE-125M | 1.550E+06 | 1.550E+06 | 1.550E+06 | 1.550E+06 | 1.550E+06 | 1.550E+06 | 2.130E+06 | 1.550E+06 |
| TE-127 | 2.980E+03 | 2.980E+03 | 2.980E+03 | 2.980E+03 | 2.980E+03 | 2.980E+03 | 3.280E+03 | 2.980E+03 |
| TE-127M | 9.160E+04 | 9.160E+04 | 9.160E+04 | 9.160E+04 | 9.160E+04 | 9.160E+04 | 1.080E+05 | 9.160E+04 |
| TE-129 | 2.620E+04 | 2.620E+04 | 2.620E+04 | 2.620E+04 | 2.620E+04 | 2.620E+04 | 3.100E+04 | 2.620E+04 |
| TE-129M | 1.980E+07 | 1.980E+07 | 1.980E+07 | 1.980E+07 | 1.980E+07 | 1.980E+07 | 2.310E+07 | 1.980E+07 |
| TE-131 | 2.920E+04 | 2.920E+04 | 2.920E+04 | 2.920E+04 | 2.920E+04 | 2.920E+04 | 3.450E+07 | 2.920E+04 |
| TE-131M | 8.030E+06 | 8.030E+06 | 8.030E+06 | 8.030E+06 | 8.030E+06 | 8.030E+06 | 9.460E+06 | 8.030E+06 |
| TE-132 | 4.230E+06 | 4.230E+06 | 4.230E+06 | 4.230E+06 | 4.230E+06 | 4.230E+06 | 4.980E+06 | 4.230E+06 |
| I-130 | 5.510E+06 | 5.510E+06 | 5.510E+06 | 5.510E+06 | 5.510E+06 | 5.510E+06 | 6.690E+06 | 5.510E+06 |

# APPENDIX I

## $R_i$ Child Dose Factors for use in the Gaseous Dose Calculations

| Agegroup: | CHILD | Pathway: | Ground Plane Deposition (GPD) | | | Units: | $m^2$·mrem/yr / µCi/sec | |
|---|---|---|---|---|---|---|---|---|
| **Nuclide** | **Bone** | **Liver** | **Thyroid** | **Kidney** | **Lung** | **Gilli** | **Skin** | **Total Body** |
| I-131 | 1.720E+07 | 1.720E+07 | 1.720E+07 | 1.720E+07 | 1.720E+07 | 1.720E+07 | 2.090E+07 | 1.720E+07 |
| I-132 | 1.250E+06 | 1.250E+06 | 1.250E+06 | 1.250E+06 | 1.250E+06 | 1.250E+06 | 1.470E+06 | 1.250E+06 |
| I-133 | 2.450E+06 | 2.450E+06 | 2.450E+06 | 2.450E+06 | 2.450E+06 | 2.450E+06 | 2.980E+06 | 2.450E+06 |
| I-134 | 4.470E+05 | 4.470E+05 | 4.470E+05 | 4.470E+05 | 4.470E+05 | 4.470E+05 | 5.300E+05 | 4.470E+05 |
| I-135 | 2.530E+06 | 2.530E+06 | 2.530E+06 | 2.530E+06 | 2.530E+06 | 2.530E+06 | 2.950E+06 | 2.530E+06 |
| CS-134 | 6.860E+09 | 6.860E+09 | 6.860E+09 | 6.860E+09 | 6.860E+09 | 6.860E+09 | 8.000E+09 | 6.860E+09 |
| CS-136 | 1.510E+08 | 1.510E+08 | 1.510E+08 | 1.510E+08 | 1.510E+08 | 1.510E+08 | 1.710E+08 | 1.510E+08 |
| CS-137 | 1.030E+10 | 1.030E+10 | 1.030E+10 | 1.030E+10 | 1.030E+10 | 1.030E+10 | 1.200E+10 | 1.030E+10 |
| CS-138 | 3.590E+05 | 3.590E+05 | 3.590E+05 | 3.590E+05 | 3.590E+05 | 3.590E+05 | 4.100E+05 | 3.590E+05 |
| BA-139 | 1.060E+05 | 1.060E+05 | 1.060E+05 | 1.060E+05 | 1.060E+05 | 1.060E+05 | 1.190E+05 | 1.060E+05 |
| BA-140 | 2.050E+07 | 2.050E+07 | 2.050E+07 | 2.050E+07 | 2.050E+07 | 2.050E+07 | 2.350E+07 | 2.050E+07 |
| BA-141 | 4.170E+04 | 4.170E+04 | 4.170E+04 | 4.170E+04 | 4.170E+04 | 4.170E+04 | 4.750E+04 | 4.170E+04 |
| BA-142 | 4.490E+04 | 4.490E+04 | 4.490E+04 | 4.490E+04 | 4.490E+04 | 4.490E+04 | 5.110E+04 | 4.490E+04 |
| LA-140 | 1.920E+07 | 1.920E+07 | 1.920E+07 | 1.920E+07 | 1.920E+07 | 1.920E+07 | 2.180E+07 | 1.920E+07 |
| LA-142 | 7.600E+05 | 7.600E+05 | 7.600E+05 | 7.600E+05 | 7.600E+05 | 7.600E+05 | 9.120E+05 | 7.600E+05 |
| CE-141 | 1.370E+07 | 1.370E+07 | 1.370E+07 | 1.370E+07 | 1.370E+07 | 1.370E+07 | 1.540E+07 | 1.370E+07 |
| CE-143 | 2.310E+06 | 2.310E+06 | 2.310E+06 | 2.310E+06 | 2.310E+06 | 2.310E+06 | 2.630E+06 | 2.310E+06 |
| CE-144 | 6.950E+07 | 6.950E+07 | 6.950E+07 | 6.950E+07 | 6.950E+07 | 6.950E+07 | 8.040E+07 | 6.950E+07 |
| PR-143 | 0.000E+00 | 0.000E+00 | 0.000E+00 | 0.000E+00 | 0.000E+00 | 0.000E+00 | 0.000E+00 | 0.000E+00 |
| PR-144 | 1.830E+03 | 1.830E+03 | 1.830E+03 | 1.830E+03 | 1.830E+03 | 1.830E+03 | 2.110E+03 | 1.830E+03 |
| ND-147 | 8.390E+06 | 8.390E+06 | 8.390E+06 | 8.390E+06 | 8.390E+06 | 8.390E+06 | 1.010E+07 | 8.390E+06 |
| W-187 | 2.350E+06 | 2.350E+06 | 2.350E+06 | 2.350E+06 | 2.350E+06 | 2.350E+06 | 2.730E+06 | 2.350E+06 |
| NP-239 | 1.710E+06 | 1.710E+06 | 1.710E+06 | 1.710E+06 | 1.710E+06 | 1.710E+06 | 1.980E+06 | 1.710E+06 |

# APPENDIX J

## $R_i$ Infant Dose Factors for use in the Gaseous Dose Calculations

| Agegroup: | INFANT | Pathway: | Grs/Cow/Milk (CMILK) | | | Units: | $m^2$·mrem/yr / µCi/sec; mrem/yr / µCi/$m^3$ (H-3, C-14) | |
|---|---|---|---|---|---|---|---|---|
| **Nuclide** | **Bone** | **Liver** | **Thyroid** | **Kidney** | **Lung** | **Gilli** | **Skin** | **Total Body** |
| H-3 | 0.000E+00 | 2.380E+03 | 2.380E+03 | 2.380E+03 | 2.380E+03 | 2.380E+03 | 0.000E+00 | 2.380E+03 |
| C-14 | 2.260E+05 | 4.820E+04 | 4.820E+04 | 4.820E+04 | 4.820E+04 | 4.820E+04 | 0.000E+00 | 4.820E+04 |
| NA-24 | 1.540E+07 | 1.540E+07 | 1.540E+07 | 1.540E+07 | 1.540E+07 | 1.540E+07 | 0.000E+00 | 1.540E+07 |
| P-32 | 1.600E+11 | 9.430E+09 | 0.000E+00 | 0.000E+00 | 0.000E+00 | 2.170E+09 | 0.000E+00 | 6.210E+09 |
| CR-51 | 0.000E+00 | 0.000E+00 | 1.050E+05 | 2.300E+04 | 2.050E+05 | 4.700E+06 | 0.000E+00 | 1.610E+05 |
| MN-54 | 0.000E+00 | 3.900E+07 | 0.000E+00 | 8.640E+06 | 0.000E+00 | 1.430E+07 | 0.000E+00 | 8.840E+06 |
| MN-56 | 0.000E+00 | 3.100E-02 | 0.000E+00 | 2.660E-02 | 0.000E+00 | 2.810E+00 | 0.000E+00 | 5.340E-03 |
| FE-55 | 1.350E+08 | 8.730E+07 | 0.000E+00 | 0.000E+00 | 4.270E+07 | 1.110E+07 | 0.000E+00 | 2.330E+07 |
| FE-59 | 2.240E+08 | 3.920E+08 | 0.000E+00 | 0.000E+00 | 1.160E+08 | 1.870E+08 | 0.000E+00 | 1.540E+08 |
| CO-58 | 0.000E+00 | 2.420E+07 | 0.000E+00 | 0.000E+00 | 0.000E+00 | 6.040E+07 | 0.000E+00 | 6.050E+07 |
| CO-60 | 0.000E+00 | 8.820E+07 | 0.000E+00 | 0.000E+00 | 0.000E+00 | 2.100E+08 | 0.000E+00 | 2.080E+08 |
| NI-63 | 3.490E+10 | 2.160E+09 | 0.000E+00 | 0.000E+00 | 0.000E+00 | 1.070E+08 | 0.000E+00 | 1.210E+09 |
| NI-65 | 3.510E+00 | 3.970E-01 | 0.000E+00 | 0.000E+00 | 0.000E+00 | 3.020E+01 | 0.000E+00 | 1.800E-01 |
| CU-64 | 0.000E+00 | 1.850E+05 | 0.000E+00 | 3.140E+05 | 0.000E+00 | 3.810E+06 | 0.000E+00 | 8.590E+04 |
| ZN-65 | 5.550E+09 | 1.900E+10 | 0.000E+00 | 9.230E+09 | 0.000E+00 | 1.610E+10 | 0.000E+00 | 8.780E+09 |
| ZN-69 | 2.020E-11 | 3.630E-11 | 0.000E+00 | 1.510E-11 | 0.000E+00 | 2.960E-09 | 0.000E+00 | 2.700E-12 |
| BR-83 | 0.000E+00 | 0.000E+00 | 0.000E+00 | 0.000E+00 | 0.000E+00 | 0.000E+00 | 0.000E+00 | 9.340E-01 |
| BR-84 | 0.000E+00 | 0.000E+00 | 0.000E+00 | 0.000E+00 | 0.000E+00 | 0.000E+00 | 0.000E+00 | 1.260E-22 |
| BR-85 | 0.000E+00 | 0.000E+00 | 0.000E+00 | 0.000E+00 | 0.000E+00 | 0.000E+00 | 0.000E+00 | 0.000E+00 |
| RB-86 | 0.000E+00 | 2.230E+10 | 0.000E+00 | 0.000E+00 | 0.000E+00 | 5.690E+08 | 0.000E+00 | 1.100E+10 |
| RB-88 | 0.000E+00 | 1.880E-44 | 0.000E+00 | 0.000E+00 | 0.000E+00 | 1.830E-44 | 0.000E+00 | 1.030E-44 |
| RB-89 | 0.000E+00 | 3.290E-52 | 0.000E+00 | 0.000E+00 | 0.000E+00 | 1.120E-52 | 0.000E+00 | 2.260E-52 |
| SR-89 | 1.260E+10 | 0.000E+00 | 0.000E+00 | 0.000E+00 | 0.000E+00 | 2.590E+08 | 0.000E+00 | 3.610E+08 |
| SR-90 | 1.220E+11 | 0.000E+00 | 0.000E+00 | 0.000E+00 | 0.000E+00 | 1.520E+09 | 0.000E+00 | 3.100E+10 |
| SR-91 | 2.720E+05 | 0.000E+00 | 0.000E+00 | 0.000E+00 | 0.000E+00 | 3.220E+05 | 0.000E+00 | 9.830E+03 |

# APPENDIX J

## $R_i$ Infant Dose Factors for use in the Gaseous Dose Calculations

| Agegroup: | INFANT | Pathway: | Grs/Cow/Milk (CMILK) | | | Units: | $m^2$·mrem/yr / µCi/sec; mrem/yr / µCi/$m^3$ (H-3, C-14) | |
|---|---|---|---|---|---|---|---|---|
| **Nuclide** | **Bone** | **Liver** | **Thyroid** | **Kidney** | **Lung** | **Gilli** | **Skin** | **Total Body** |
| SR-92 | 4.640E+00 | 0.000E+00 | 0.000E+00 | 0.000E+00 | 0.000E+00 | 5.000E+01 | 0.000E+00 | 1.720E-01 |
| Y-90 | 6.810E+02 | 0.000E+00 | 0.000E+00 | 0.000E+00 | 0.000E+00 | 9.410E+05 | 0.000E+00 | 1.830E+01 |
| Y-91 | 7.330E+04 | 0.000E+00 | 0.000E+00 | 0.000E+00 | 0.000E+00 | 5.250E+06 | 0.000E+00 | 1.950E+03 |
| Y-91M | 5.670E-19 | 0.000E+00 | 0.000E+00 | 0.000E+00 | 0.000E+00 | 1.890E-15 | 0.000E+00 | 1.930E-20 |
| Y-92 | 5.380E-04 | 0.000E+00 | 0.000E+00 | 0.000E+00 | 0.000E+00 | 1.030E+01 | 0.000E+00 | 1.510E-05 |
| Y-93 | 2.160E+00 | 0.000E+00 | 0.000E+00 | 0.000E+00 | 0.000E+00 | 1.700E+04 | 0.000E+00 | 5.870E-02 |
| ZR-95 | 6.800E+03 | 1.660E+03 | 0.000E+00 | 1.790E+03 | 0.000E+00 | 8.260E+05 | 0.000E+00 | 1.180E+03 |
| ZR-97 | 4.060E+00 | 6.970E-01 | 0.000E+00 | 7.030E-01 | 0.000E+00 | 4.450E+04 | 0.000E+00 | 3.180E-01 |
| NB-95 | 5.930E+05 | 2.440E+05 | 0.000E+00 | 1.750E+05 | 0.000E+00 | 2.060E+08 | 0.000E+00 | 1.410E+05 |
| MO-99 | 0.000E+00 | 2.080E+08 | 0.000E+00 | 3.110E+08 | 0.000E+00 | 6.850E+07 | 0.000E+00 | 4.060E+07 |
| TC-99M | 2.750E+01 | 5.670E+01 | 0.000E+00 | 6.100E+02 | 2.960E+01 | 1.650E+04 | 0.000E+00 | 7.300E+02 |
| TC-101 | 2.470E-59 | 3.110E-59 | 0.000E+00 | 3.700E-58 | 1.700E-59 | 5.280E-57 | 0.000E+00 | 3.080E-58 |
| RU-103 | 8.670E+03 | 0.000E+00 | 0.000E+00 | 1.800E+04 | 0.000E+00 | 1.050E+05 | 0.000E+00 | 2.900E+03 |
| RU-105 | 8.050E-03 | 0.000E+00 | 0.000E+00 | 5.920E-02 | 0.000E+00 | 3.200E+00 | 0.000E+00 | 2.710E-03 |
| RU-106 | 1.900E+05 | 0.000E+00 | 0.000E+00 | 2.250E+05 | 0.000E+00 | 1.440E+06 | 0.000E+00 | 2.380E+04 |
| AG-110M | 3.860E+08 | 2.820E+08 | 0.000E+00 | 4.030E+08 | 0.000E+00 | 1.460E+10 | 0.000E+00 | 1.860E+08 |
| TE-125M | 1.510E+08 | 5.040E+07 | 5.070E+07 | 0.000E+00 | 0.000E+00 | 7.180E+07 | 0.000E+00 | 2.040E+07 |
| TE-127 | 6.320E+03 | 2.120E+03 | 5.140E+03 | 1.540E+04 | 0.000E+00 | 1.330E+05 | 0.000E+00 | 1.360E+03 |
| TE-127M | 4.210E+08 | 1.400E+08 | 1.220E+08 | 1.040E+09 | 0.000E+00 | 1.700E+08 | 0.000E+00 | 5.100E+07 |
| TE-129 | 2.720E-09 | 9.380E-10 | 2.280E-09 | 6.770E-09 | 0.000E+00 | 2.170E-07 | 0.000E+00 | 6.350E-10 |
| TE-129M | 5.570E+08 | 1.910E+08 | 2.140E+08 | 1.390E+09 | 0.000E+00 | 3.330E+08 | 0.000E+00 | 8.580E+07 |
| TE-131 | 3.430E-32 | 1.270E-32 | 3.060E-32 | 8.760E-32 | 0.000E+00 | 1.380E-30 | 0.000E+00 | 9.610E-33 |
| TE-131M | 3.380E+06 | 1.360E+06 | 2.750E+06 | 9.350E+06 | 0.000E+00 | 2.290E+07 | 0.000E+00 | 1.120E+06 |
| TE-132 | 2.110E+07 | 1.040E+07 | 1.540E+07 | 6.530E+07 | 0.000E+00 | 3.870E+07 | 0.000E+00 | 9.750E+06 |
| I-130 | 3.550E+06 | 7.810E+06 | 8.750E+08 | 8.580E+06 | 0.000E+00 | 1.670E+06 | 0.000E+00 | 3.130E+06 |

# APPENDIX J

## $R_i$ Infant Dose Factors for use in the Gaseous Dose Calculations

| Agegroup: | INFANT | Pathway: | Grs/Cow/Milk (CMILK) | | | Units: | $m^2$·mrem/yr / µCi/sec; mrem/yr / µCi/$m^3$ (H-3, C-14) | |
|---|---|---|---|---|---|---|---|---|
| **Nuclide** | **Bone** | **Liver** | **Thyroid** | **Kidney** | **Lung** | **Gilli** | **Skin** | **Total Body** |
| I-131 | 2.720E+09 | 3.200E+09 | 1.050E+12 | 3.740E+09 | 0.000E+00 | 1.140E+08 | 0.000E+00 | 1.410E+09 |
| I-132 | 1.430E+00 | 2.900E+00 | 1.360E+02 | 3.240E+00 | 0.000E+00 | 2.350E+00 | 0.000E+00 | 1.030E+00 |
| I-133 | 3.630E+07 | 5.280E+07 | 9.600E+09 | 6.210E+07 | 0.000E+00 | 8.930E+06 | 0.000E+00 | 1.550E+07 |
| I-134 | 1.760E-11 | 3.600E-11 | 8.400E-10 | 4.030E-11 | 0.000E+00 | 3.720E-11 | 0.000E+00 | 1.280E-11 |
| I-135 | 1.120E+05 | 2.230E+05 | 2.000E+07 | 2.490E+05 | 0.000E+00 | 8.080E+04 | 0.000E+00 | 8.140E+04 |
| CS-134 | 3.650E+10 | 6.800E+10 | 0.000E+00 | 1.750E+10 | 7.180E+09 | 1.850E+08 | 0.000E+00 | 6.870E+09 |
| CS-136 | 1.980E+09 | 5.810E+09 | 0.000E+00 | 2.320E+09 | 4.740E+08 | 8.820E+07 | 0.000E+00 | 2.170E+09 |
| CS-137 | 5.150E+10 | 6.020E+10 | 0.000E+00 | 1.620E+10 | 6.550E+09 | 1.880E+08 | 0.000E+00 | 4.270E+09 |
| CS-138 | 8.390E-23 | 1.360E-22 | 0.000E+00 | 6.800E-23 | 1.060E-23 | 2.180E-22 | 0.000E+00 | 6.610E-23 |
| BA-139 | 4.270E-07 | 2.830E-10 | 0.000E+00 | 1.700E-10 | 1.720E-10 | 2.710E-05 | 0.000E+00 | 1.240E-08 |
| BA-140 | 2.410E+08 | 2.410E+05 | 0.000E+00 | 5.720E+04 | 1.480E+05 | 5.920E+07 | 0.000E+00 | 1.240E+07 |
| BA-141 | 3.930E-45 | 2.690E-48 | 0.000E+00 | 1.620E-48 | 1.640E-48 | 4.800E-44 | 0.000E+00 | 1.240E-46 |
| BA-142 | 2.430E-79 | 2.020E-82 | 0.000E+00 | 1.160E-82 | 1.220E-82 | 1.000E-78 | 0.000E+00 | 1.200E-80 |
| LA-140 | 4.050E+01 | 1.600E+01 | 0.000E+00 | 0.000E+00 | 0.000E+00 | 1.880E+05 | 0.000E+00 | 4.110E+00 |
| LA-142 | 1.700E-10 | 6.250E-11 | 0.000E+00 | 0.000E+00 | 0.000E+00 | 1.060E-05 | 0.000E+00 | 1.500E-11 |
| CE-141 | 4.340E+04 | 2.640E+04 | 0.000E+00 | 8.150E+03 | 0.000E+00 | 1.370E+07 | 0.000E+00 | 3.110E+03 |
| CE-143 | 3.970E+02 | 2.630E+05 | 0.000E+00 | 7.670E+01 | 0.000E+00 | 1.540E+06 | 0.000E+00 | 3.000E+01 |
| CE-144 | 2.330E+06 | 9.520E+05 | 0.000E+00 | 3.850E+05 | 0.000E+00 | 1.330E+08 | 0.000E+00 | 1.300E+05 |
| PR-143 | 1.490E+03 | 5.550E+02 | 0.000E+00 | 2.060E+02 | 0.000E+00 | 7.840E+05 | 0.000E+00 | 7.360E+01 |
| PR-144 | 5.690E-53 | 2.200E-53 | 0.000E+00 | 7.980E-54 | 0.000E+00 | 1.020E-48 | 0.000E+00 | 2.870E-54 |
| ND-147 | 8.810E+02 | 9.050E+02 | 0.000E+00 | 3.490E+02 | 0.000E+00 | 5.740E+05 | 0.000E+00 | 5.550E+01 |
| W-187 | 6.080E+04 | 4.230E+04 | 0.000E+00 | 0.000E+00 | 0.000E+00 | 2.480E+06 | 0.000E+00 | 1.460E+04 |
| NP-239 | 3.650E+01 | 3.260E+00 | 0.000E+00 | 6.510E+00 | 0.000E+00 | 9.430E+04 | 0.000E+00 | 1.840E+00 |

# APPENDIX J

## $R_i$ Infant Dose Factors for use in the Gaseous Dose Calculations

| Agegroup: | INFANT | Pathway: | Grs/Goat/Milk (GMILK) | | | Units: | $m^2$·mrem/yr / µCi/sec; mrem/yr / µCi/$m^3$ (H-3, C-14) | |
|---|---|---|---|---|---|---|---|---|
| **Nuclide** | **Bone** | **Liver** | **Thyroid** | **Kidney** | **Lung** | **Gilli** | **Skin** | **Total Body** |
| H-3 | 0.000E+00 | 4.860E+03 | 4.860E+03 | 4.860E+03 | 4.860E+03 | 4.860E+03 | 0.000E+00 | 4.860E+03 |
| C-14 | 2.260E+05 | 4.820E+04 | 4.820E+04 | 4.820E+04 | 4.820E+04 | 4.820E+04 | 0.000E+00 | 4.820E+04 |
| NA-24 | 1.850E+06 | 1.850E+06 | 1.850E+06 | 1.850E+06 | 1.850E+06 | 1.850E+06 | 0.000E+00 | 1.850E+06 |
| P-32 | 1.920E+11 | 1.130E+10 | 0.000E+00 | 0.000E+00 | 0.000E+00 | 2.600E+09 | 0.000E+00 | 7.460E+09 |
| CR-51 | 0.000E+00 | 0.000E+00 | 1.260E+04 | 2.760E+03 | 2.460E+04 | 5.640E+05 | 0.000E+00 | 1.940E+04 |
| MN-54 | 0.000E+00 | 4.680E+06 | 0.000E+00 | 1.040E+06 | 0.000E+00 | 1.720E+06 | 0.000E+00 | 1.060E+06 |
| MN-56 | 0.000E+00 | 3.720E-03 | 0.000E+00 | 3.190E-03 | 0.000E+00 | 3.380E-01 | 0.000E+00 | 6.410E-04 |
| FE-55 | 1.760E+06 | 1.130E+06 | 0.000E+00 | 0.000E+00 | 5.550E+05 | 1.440E+05 | 0.000E+00 | 3.030E+05 |
| FE-59 | 2.920E+06 | 5.100E+06 | 0.000E+00 | 0.000E+00 | 1.510E+06 | 2.430E+06 | 0.000E+00 | 2.010E+06 |
| CO-58 | 0.000E+00 | 2.910E+06 | 0.000E+00 | 0.000E+00 | 0.000E+00 | 7.250E+06 | 0.000E+00 | 7.260E+06 |
| CO-60 | 0.000E+00 | 1.060E+07 | 0.000E+00 | 0.000E+00 | 0.000E+00 | 2.520E+07 | 0.000E+00 | 2.500E+07 |
| NI-63 | 4.190E+09 | 2.590E+08 | 0.000E+00 | 0.000E+00 | 0.000E+00 | 1.290E+07 | 0.000E+00 | 1.450E+08 |
| NI-65 | 4.210E-01 | 4.760E-02 | 0.000E+00 | 0.000E+00 | 0.000E+00 | 3.620E+00 | 0.000E+00 | 2.170E-02 |
| CU-64 | 0.000E+00 | 2.070E+04 | 0.000E+00 | 3.500E+04 | 0.000E+00 | 4.240E+05 | 0.000E+00 | 9.570E+03 |
| ZN-65 | 6.660E+08 | 2.280E+09 | 0.000E+00 | 1.110E+09 | 0.000E+00 | 1.930E+09 | 0.000E+00 | 1.050E+09 |
| ZN-69 | 2.420E-12 | 4.360E-12 | 0.000E+00 | 1.810E-12 | 0.000E+00 | 3.550E-10 | 0.000E+00 | 3.240E-13 |
| BR-83 | 0.000E+00 | 0.000E+00 | 0.000E+00 | 0.000E+00 | 0.000E+00 | 0.000E+00 | 0.000E+00 | 1.120E-01 |
| BR-84 | 0.000E+00 | 0.000E+00 | 0.000E+00 | 0.000E+00 | 0.000E+00 | 0.000E+00 | 0.000E+00 | 1.510E-23 |
| BR-85 | 0.000E+00 | 0.000E+00 | 0.000E+00 | 0.000E+00 | 0.000E+00 | 0.000E+00 | 0.000E+00 | 0.000E+00 |
| RB-86 | 0.000E+00 | 2.670E+09 | 0.000E+00 | 0.000E+00 | 0.000E+00 | 6.830E+07 | 0.000E+00 | 1.320E+09 |
| RB-88 | 0.000E+00 | 2.250E-45 | 0.000E+00 | 0.000E+00 | 0.000E+00 | 2.190E-45 | 0.000E+00 | 1.230E-45 |
| RB-89 | 0.000E+00 | 3.940E-53 | 0.000E+00 | 0.000E+00 | 0.000E+00 | 1.340E-53 | 0.000E+00 | 2.720E-53 |
| SR-89 | 2.640E+10 | 0.000E+00 | 0.000E+00 | 0.000E+00 | 0.000E+00 | 5.430E+08 | 0.000E+00 | 7.580E+08 |
| SR-90 | 2.550E+11 | 0.000E+00 | 0.000E+00 | 0.000E+00 | 0.000E+00 | 3.190E+09 | 0.000E+00 | 6.500E+10 |
| SR-91 | 5.700E+05 | 0.000E+00 | 0.000E+00 | 0.000E+00 | 0.000E+00 | 6.750E+05 | 0.000E+00 | 2.060E+04 |

# APPENDIX J

## $R_i$ Infant Dose Factors for use in the Gaseous Dose Calculations

| Agegroup: | INFANT | Pathway: | Grs/Goat/Milk (GMILK) | | | Units: | $m^2$·mrem/yr / µCi/sec; mrem/yr / µCi/$m^3$ (H-3, C-14) | |
|---|---|---|---|---|---|---|---|---|
| **Nuclide** | **Bone** | **Liver** | **Thyroid** | **Kidney** | **Lung** | **Gilli** | **Skin** | **Total Body** |
| SR-92 | 9.750E+00 | 0.000E+00 | 0.000E+00 | 0.000E+00 | 0.000E+00 | 1.050E+02 | 0.000E+00 | 3.620E-01 |
| Y-90 | 8.170E+01 | 0.000E+00 | 0.000E+00 | 0.000E+00 | 0.000E+00 | 1.130E+05 | 0.000E+00 | 2.190E+00 |
| Y-91 | 8.790E+03 | 0.000E+00 | 0.000E+00 | 0.000E+00 | 0.000E+00 | 6.300E+05 | 0.000E+00 | 2.340E+02 |
| Y-91M | 6.810E-20 | 0.000E+00 | 0.000E+00 | 0.000E+00 | 0.000E+00 | 2.270E-16 | 0.000E+00 | 2.320E-21 |
| Y-92 | 6.450E-05 | 0.000E+00 | 0.000E+00 | 0.000E+00 | 0.000E+00 | 1.230E+00 | 0.000E+00 | 1.810E-06 |
| Y-93 | 2.590E-01 | 0.000E+00 | 0.000E+00 | 0.000E+00 | 0.000E+00 | 2.040E+03 | 0.000E+00 | 7.050E-03 |
| ZR-95 | 8.170E+02 | 1.990E+02 | 0.000E+00 | 2.140E+02 | 0.000E+00 | 9.910E+04 | 0.000E+00 | 1.410E+02 |
| ZR-97 | 4.870E-01 | 8.360E-02 | 0.000E+00 | 8.430E-02 | 0.000E+00 | 5.340E+03 | 0.000E+00 | 3.820E-02 |
| NB-95 | 7.120E+04 | 2.930E+04 | 0.000E+00 | 2.100E+04 | 0.000E+00 | 2.480E+07 | 0.000E+00 | 1.700E+04 |
| MO-99 | 0.000E+00 | 2.500E+07 | 0.000E+00 | 3.730E+07 | 0.000E+00 | 8.220E+06 | 0.000E+00 | 4.870E+06 |
| TC-99M | 3.300E+00 | 6.800E+00 | 0.000E+00 | 7.320E+01 | 3.550E+00 | 1.970E+03 | 0.000E+00 | 8.760E+01 |
| TC-101 | 2.960E-60 | 3.730E-60 | 0.000E+00 | 4.440E-59 | 2.030E-60 | 6.340E-58 | 0.000E+00 | 3.690E-59 |
| RU-103 | 1.040E+03 | 0.000E+00 | 0.000E+00 | 2.170E+03 | 0.000E+00 | 1.270E+04 | 0.000E+00 | 3.480E+02 |
| RU-105 | 9.660E-04 | 0.000E+00 | 0.000E+00 | 7.110E-03 | 0.000E+00 | 3.840E-01 | 0.000E+00 | 3.250E-04 |
| RU-106 | 2.280E+04 | 0.000E+00 | 0.000E+00 | 2.700E+04 | 0.000E+00 | 1.730E+05 | 0.000E+00 | 2.850E+03 |
| AG-110M | 4.630E+07 | 3.380E+07 | 0.000E+00 | 4.830E+07 | 0.000E+00 | 1.750E+09 | 0.000E+00 | 2.240E+07 |
| TE-125M | 1.810E+07 | 6.050E+06 | 6.090E+06 | 0.000E+00 | 0.000E+00 | 8.620E+06 | 0.000E+00 | 2.450E+06 |
| TE-127 | 7.580E+02 | 2.540E+02 | 6.170E+02 | 1.850E+03 | 0.000E+00 | 1.590E+04 | 0.000E+00 | 1.630E+02 |
| TE-127M | 5.050E+07 | 1.680E+07 | 1.460E+07 | 1.240E+08 | 0.000E+00 | 2.040E+07 | 0.000E+00 | 6.120E+06 |
| TE-129 | 3.260E-10 | 1.130E-10 | 2.740E-10 | 8.130E-10 | 0.000E+00 | 2.610E-08 | 0.000E+00 | 7.620E-11 |
| TE-129M | 6.690E+07 | 2.290E+07 | 2.570E+07 | 1.670E+08 | 0.000E+00 | 3.990E+07 | 0.000E+00 | 1.030E+07 |
| TE-131 | 4.110E-33 | 1.520E-33 | 3.670E-33 | 1.050E-32 | 0.000E+00 | 1.660E-31 | 0.000E+00 | 1.150E-33 |
| TE-131M | 4.050E+05 | 1.630E+05 | 3.310E+05 | 1.120E+06 | 0.000E+00 | 2.750E+06 | 0.000E+00 | 1.350E+05 |
| TE-132 | 2.530E+06 | 1.250E+06 | 1.850E+06 | 7.840E+06 | 0.000E+00 | 4.640E+06 | 0.000E+00 | 1.170E+06 |
| I-130 | 4.260E+06 | 9.370E+06 | 1.050E+09 | 1.030E+07 | 0.000E+00 | 2.010E+06 | 0.000E+00 | 3.760E+06 |

# APPENDIX J

## $R_i$ Infant Dose Factors for use in the Gaseous Dose Calculations

| Agegroup: | INFANT | Pathway: | Grs/Goat/Milk (GMILK) | | | Units: | $m^2$·mrem/yr / µCi/sec; mrem/yr / µCi/$m^3$ (H-3, C-14) | |
|---|---|---|---|---|---|---|---|---|
| **Nuclide** | **Bone** | **Liver** | **Thyroid** | **Kidney** | **Lung** | **Gilli** | **Skin** | **Total Body** |
| I-131 | 3.260E+09 | 3.850E+09 | 1.260E+12 | 4.490E+09 | 0.000E+00 | 1.370E+08 | 0.000E+00 | 1.690E+09 |
| I-132 | 1.720E+00 | 3.480E+00 | 1.630E+02 | 3.890E+00 | 0.000E+00 | 2.820E+00 | 0.000E+00 | 1.240E+00 |
| I-133 | 4.350E+07 | 6.340E+07 | 1.150E+10 | 7.450E+07 | 0.000E+00 | 1.070E+07 | 0.000E+00 | 1.860E+07 |
| I-134 | 2.110E-11 | 4.320E-11 | 1.010E-09 | 4.830E-11 | 0.000E+00 | 4.470E-11 | 0.000E+00 | 1.540E-11 |
| I-135 | 1.350E+05 | 2.680E+05 | 2.400E+07 | 2.990E+05 | 0.000E+00 | 9.700E+04 | 0.000E+00 | 9.770E+04 |
| CS-134 | 1.090E+11 | 2.040E+11 | 0.000E+00 | 5.250E+10 | 2.150E+10 | 5.540E+08 | 0.000E+00 | 2.060E+10 |
| CS-136 | 5.930E+09 | 1.740E+10 | 0.000E+00 | 6.950E+09 | 1.420E+09 | 2.650E+08 | 0.000E+00 | 6.510E+09 |
| CS-137 | 1.540E+11 | 1.810E+11 | 0.000E+00 | 4.850E+10 | 1.960E+10 | 5.650E+08 | 0.000E+00 | 1.280E+10 |
| CS-138 | 2.520E-22 | 4.090E-22 | 0.000E+00 | 2.040E-22 | 3.190E-23 | 6.540E-22 | 0.000E+00 | 1.980E-22 |
| BA-139 | 5.130E-08 | 3.400E-11 | 0.000E+00 | 2.040E-11 | 2.060E-11 | 3.250E-06 | 0.000E+00 | 1.480E-09 |
| BA-140 | 2.890E+07 | 2.890E+04 | 0.000E+00 | 6.870E+03 | 1.780E+04 | 7.100E+06 | 0.000E+00 | 1.490E+06 |
| BA-141 | 4.720E-46 | 3.230E-49 | 0.000E+00 | 1.940E-49 | 1.960E-49 | 5.760E-45 | 0.000E+00 | 1.490E-47 |
| BA-142 | 2.920E-80 | 2.430E-83 | 0.000E+00 | 1.400E-83 | 1.470E-83 | 1.200E-79 | 0.000E+00 | 1.440E-81 |
| LA-140 | 4.860E+00 | 1.920E+00 | 0.000E+00 | 0.000E+00 | 0.000E+00 | 2.250E+04 | 0.000E+00 | 4.930E-01 |
| LA-142 | 2.040E-11 | 7.500E-12 | 0.000E+00 | 0.000E+00 | 0.000E+00 | 1.270E-06 | 0.000E+00 | 1.790E-12 |
| CE-141 | 5.200E+03 | 3.170E+03 | 0.000E+00 | 9.790E+02 | 0.000E+00 | 1.640E+06 | 0.000E+00 | 3.740E+02 |
| CE-143 | 4.760E+01 | 3.160E+04 | 0.000E+00 | 9.200E+00 | 0.000E+00 | 1.840E+05 | 0.000E+00 | 3.600E+00 |
| CE-144 | 2.790E+05 | 1.140E+05 | 0.000E+00 | 4.620E+04 | 0.000E+00 | 1.600E+07 | 0.000E+00 | 1.560E+04 |
| PR-143 | 1.780E+02 | 6.670E+01 | 0.000E+00 | 2.480E+01 | 0.000E+00 | 9.410E+04 | 0.000E+00 | 8.840E+00 |
| PR-144 | 6.830E-54 | 2.640E-54 | 0.000E+00 | 9.570E-55 | 0.000E+00 | 1.230E-49 | 0.000E+00 | 3.440E-55 |
| ND-147 | 1.060E+02 | 1.090E+02 | 0.000E+00 | 4.190E+01 | 0.000E+00 | 6.880E+04 | 0.000E+00 | 6.650E+00 |
| W-187 | 7.300E+03 | 5.070E+03 | 0.000E+00 | 0.000E+00 | 0.000E+00 | 2.980E+05 | 0.000E+00 | 1.750E+03 |
| NP-239 | 4.380E+00 | 3.910E-01 | 0.000E+00 | 7.810E-01 | 0.000E+00 | 1.130E+04 | 0.000E+00 | 2.210E-01 |

# APPENDIX J

## $R_i$ Infant Dose Factors for use in the Gaseous Dose Calculations

| Agegroup: | INFANT | Pathway: | Inhalation (INHL) | | | Units: | mrem/yr / µCi/m$^3$ | |
|---|---|---|---|---|---|---|---|---|
| **Nuclide** | **Bone** | **Liver** | **Thyroid** | **Kidney** | **Lung** | **Gilli** | **Skin** | **Total Body** |
| H-3 | 0.000E+00 | 6.470E+02 | 6.470E+02 | 6.470E+02 | 6.470E+02 | 6.470E+02 | 0.000E+00 | 6.470E+02 |
| C-14 | 2.650E+04 | 5.310E+03 | 5.310E+03 | 5.310E+03 | 5.310E+03 | 5.310E+03 | 0.000E+00 | 5.310E+03 |
| NA-24 | 1.060E+04 | 1.060E+04 | 1.060E+04 | 1.060E+04 | 1.060E+04 | 1.060E+04 | 0.000E+00 | 1.060E+04 |
| P-32 | 2.030E+06 | 1.120E+05 | 0.000E+00 | 0.000E+00 | 0.000E+00 | 1.610E+04 | 0.000E+00 | 7.740E+04 |
| CR-51 | 0.000E+00 | 0.000E+00 | 5.750E+01 | 1.320E+01 | 1.280E+04 | 3.570E+02 | 0.000E+00 | 8.950E+01 |
| MN-54 | 0.000E+00 | 2.530E+04 | 0.000E+00 | 4.980E+03 | 1.000E+06 | 7.060E+03 | 0.000E+00 | 4.980E+03 |
| MN-56 | 0.000E+00 | 1.540E+00 | 0.000E+00 | 1.100E+00 | 1.250E+04 | 7.170E+04 | 0.000E+00 | 2.210E-01 |
| FE-55 | 1.970E+04 | 1.170E+04 | 0.000E+00 | 0.000E+00 | 8.690E+04 | 1.090E+03 | 0.000E+00 | 3.330E+03 |
| FE-59 | 1.360E+04 | 2.350E+04 | 0.000E+00 | 0.000E+00 | 1.010E+06 | 2.480E+04 | 0.000E+00 | 9.480E+03 |
| CO-58 | 0.000E+00 | 1.220E+03 | 0.000E+00 | 0.000E+00 | 7.770E+05 | 1.110E+04 | 0.000E+00 | 1.820E+03 |
| CO-60 | 0.000E+00 | 8.020E+03 | 0.000E+00 | 0.000E+00 | 4.510E+06 | 3.190E+04 | 0.000E+00 | 1.180E+04 |
| NI-63 | 3.390E+05 | 2.040E+04 | 0.000E+00 | 0.000E+00 | 2.090E+05 | 2.420E+03 | 0.000E+00 | 1.160E+04 |
| NI-65 | 2.390E+00 | 2.840E-01 | 0.000E+00 | 0.000E+00 | 8.120E+03 | 5.010E+04 | 0.000E+00 | 1.230E-01 |
| CU-64 | 0.000E+00 | 1.880E+00 | 0.000E+00 | 3.980E+00 | 9.300E+03 | 1.500E+04 | 0.000E+00 | 7.740E-01 |
| ZN-65 | 1.930E+04 | 6.260E+04 | 0.000E+00 | 3.250E+04 | 6.470E+05 | 5.140E+04 | 0.000E+00 | 3.110E+04 |
| ZN-69 | 5.390E-02 | 9.670E-02 | 0.000E+00 | 4.020E-02 | 1.470E+03 | 1.320E+04 | 0.000E+00 | 7.180E-03 |
| BR-83 | 0.000E+00 | 0.000E+00 | 0.000E+00 | 0.000E+00 | 0.000E+00 | 0.000E+00 | 0.000E+00 | 3.810E+02 |
| BR-84 | 0.000E+00 | 0.000E+00 | 0.000E+00 | 0.000E+00 | 0.000E+00 | 0.000E+00 | 0.000E+00 | 4.000E+02 |
| BR-85 | 0.000E+00 | 0.000E+00 | 0.000E+00 | 0.000E+00 | 0.000E+00 | 0.000E+00 | 0.000E+00 | 2.040E+01 |
| RB-86 | 0.000E+00 | 1.900E+05 | 0.000E+00 | 0.000E+00 | 0.000E+00 | 3.040E+03 | 0.000E+00 | 8.820E+04 |
| RB-88 | 0.000E+00 | 5.570E+02 | 0.000E+00 | 0.000E+00 | 0.000E+00 | 3.390E+02 | 0.000E+00 | 2.870E+02 |
| RB-89 | 0.000E+00 | 3.210E+02 | 0.000E+00 | 0.000E+00 | 0.000E+00 | 6.820E+01 | 0.000E+00 | 2.060E+02 |
| SR-89 | 3.980E+05 | 0.000E+00 | 0.000E+00 | 0.000E+00 | 2.030E+06 | 6.400E+04 | 0.000E+00 | 1.140E+04 |
| SR-90 | 4.090E+07 | 0.000E+00 | 0.000E+00 | 0.000E+00 | 1.120E+07 | 1.310E+05 | 0.000E+00 | 2.590E+06 |
| SR-91 | 9.560E+01 | 0.000E+00 | 0.000E+00 | 0.000E+00 | 5.260E+04 | 7.340E+04 | 0.000E+00 | 3.460E+00 |

# APPENDIX J

## $R_i$ Infant Dose Factors for use in the Gaseous Dose Calculations

| Agegroup: | INFANT | Pathway: | Inhalation (INHL) | | | Units: | mrem/yr / µCi/m$^3$ | |
|---|---|---|---|---|---|---|---|---|
| **Nuclide** | **Bone** | **Liver** | **Thyroid** | **Kidney** | **Lung** | **Gilli** | **Skin** | **Total Body** |
| SR-92 | 1.050E+01 | 0.000E+00 | 0.000E+00 | 0.000E+00 | 2.380E+04 | 1.400E+05 | 0.000E+00 | 3.910E-01 |
| Y-90 | 3.290E+03 | 0.000E+00 | 0.000E+00 | 0.000E+00 | 2.690E+05 | 1.040E+05 | 0.000E+00 | 8.820E+01 |
| Y-91 | 5.880E+05 | 0.000E+00 | 0.000E+00 | 0.000E+00 | 2.450E+06 | 7.030E+04 | 0.000E+00 | 1.570E+04 |
| Y-91M | 4.070E-01 | 0.000E+00 | 0.000E+00 | 0.000E+00 | 2.790E+03 | 2.350E+03 | 0.000E+00 | 1.390E-02 |
| Y-92 | 1.640E+01 | 0.000E+00 | 0.000E+00 | 0.000E+00 | 2.450E+04 | 1.270E+05 | 0.000E+00 | 4.610E-01 |
| Y-93 | 1.500E+02 | 0.000E+00 | 0.000E+00 | 0.000E+00 | 7.640E+04 | 1.670E+05 | 0.000E+00 | 4.070E+00 |
| ZR-95 | 1.150E+05 | 2.790E+04 | 0.000E+00 | 3.110E+04 | 1.750E+06 | 2.170E+04 | 0.000E+00 | 2.030E+04 |
| ZR-97 | 1.500E+02 | 2.560E+01 | 0.000E+00 | 2.590E+01 | 1.100E+05 | 1.400E+05 | 0.000E+00 | 1.170E+01 |
| NB-95 | 1.570E+04 | 6.430E+03 | 0.000E+00 | 4.720E+03 | 4.790E+05 | 1.270E+04 | 0.000E+00 | 3.780E+03 |
| MO-99 | 0.000E+00 | 1.650E+02 | 0.000E+00 | 2.650E+02 | 1.350E+05 | 4.870E+04 | 0.000E+00 | 3.230E+01 |
| TC-99M | 1.400E-03 | 2.880E-03 | 0.000E+00 | 3.110E-02 | 8.110E+02 | 2.030E+03 | 0.000E+00 | 3.720E-02 |
| TC-101 | 6.510E-05 | 8.230E-05 | 0.000E+00 | 9.790E-04 | 5.840E+02 | 8.440E+02 | 0.000E+00 | 8.120E-04 |
| RU-103 | 2.020E+03 | 0.000E+00 | 0.000E+00 | 4.240E+03 | 5.520E+05 | 1.610E+04 | 0.000E+00 | 6.790E+02 |
| RU-105 | 1.220E+00 | 0.000E+00 | 0.000E+00 | 8.990E-01 | 1.570E+04 | 4.840E+04 | 0.000E+00 | 4.100E-01 |
| RU-106 | 8.680E+04 | 0.000E+00 | 0.000E+00 | 1.070E+05 | 1.160E+07 | 1.640E+05 | 0.000E+00 | 1.090E+04 |
| AG-110M | 9.980E+03 | 7.220E+03 | 0.000E+00 | 1.090E+04 | 3.670E+06 | 3.300E+04 | 0.000E+00 | 5.000E+03 |
| TE-125M | 4.760E+03 | 1.990E+03 | 1.620E+03 | 0.000E+00 | 4.470E+05 | 1.290E+04 | 0.000E+00 | 6.580E+02 |
| TE-127 | 2.230E+00 | 9.530E-01 | 1.850E+00 | 4.860E+00 | 1.030E+04 | 2.440E+04 | 0.000E+00 | 4.890E-01 |
| TE-127M | 1.670E+04 | 6.900E+03 | 4.870E+03 | 3.750E+04 | 1.310E+06 | 2.730E+04 | 0.000E+00 | 2.070E+03 |
| TE-129 | 7.880E-02 | 3.470E-02 | 6.750E-02 | 1.750E-01 | 3.000E+03 | 2.630E+04 | 0.000E+00 | 1.880E-02 |
| TE-129M | 1.410E+04 | 6.090E+03 | 5.470E+03 | 3.180E+04 | 1.680E+06 | 6.900E+04 | 0.000E+00 | 2.230E+03 |
| TE-131 | 1.740E-02 | 8.220E-03 | 1.580E-02 | 3.990E-02 | 2.060E+03 | 8.220E+03 | 0.000E+00 | 5.000E-03 |
| TE-131M | 1.070E+02 | 5.500E+01 | 8.930E+01 | 2.650E+02 | 1.990E+05 | 1.190E+05 | 0.000E+00 | 3.630E+01 |
| TE-132 | 3.720E+02 | 2.370E+02 | 2.790E+02 | 1.030E+03 | 3.400E+05 | 4.410E+04 | 0.000E+00 | 1.760E+02 |
| I-130 | 6.360E+03 | 1.390E+04 | 1.600E+06 | 1.530E+04 | 0.000E+00 | 1.990E+03 | 0.000E+00 | 5.570E+03 |

# APPENDIX J

## $R_i$ Infant Dose Factors for use in the Gaseous Dose Calculations

| Agegroup: | INFANT | Pathway: | Inhalation (INHL) | | | Units: | mrem/yr / µCi/m$^3$ | |
|---|---|---|---|---|---|---|---|---|
| **Nuclide** | **Bone** | **Liver** | **Thyroid** | **Kidney** | **Lung** | **Gilli** | **Skin** | **Total Body** |
| I-131 | 3.790E+04 | 4.440E+04 | 1.480E+07 | 5.180E+04 | 0.000E+00 | 1.060E+03 | 0.000E+00 | 1.960E+04 |
| I-132 | 1.690E+03 | 3.540E+03 | 1.690E+05 | 3.950E+03 | 0.000E+00 | 1.900E+03 | 0.000E+00 | 1.260E+03 |
| I-133 | 1.320E+04 | 1.920E+04 | 3.560E+06 | 2.240E+04 | 0.000E+00 | 2.160E+03 | 0.000E+00 | 5.600E+03 |
| I-134 | 9.210E+02 | 1.880E+03 | 4.450E+04 | 2.090E+03 | 0.000E+00 | 1.290E+03 | 0.000E+00 | 6.650E+02 |
| I-135 | 3.860E+03 | 7.600E+03 | 6.960E+05 | 8.470E+03 | 0.000E+00 | 1.830E+03 | 0.000E+00 | 2.770E+03 |
| CS-134 | 3.960E+05 | 7.030E+05 | 0.000E+00 | 1.900E+05 | 7.970E+04 | 1.330E+03 | 0.000E+00 | 7.450E+04 |
| CS-136 | 4.830E+04 | 1.350E+05 | 0.000E+00 | 5.640E+04 | 1.180E+04 | 1.430E+03 | 0.000E+00 | 5.290E+04 |
| CS-137 | 5.490E+05 | 6.120E+05 | 0.000E+00 | 1.720E+05 | 7.130E+04 | 1.330E+03 | 0.000E+00 | 4.550E+04 |
| CS-138 | 5.050E+02 | 7.810E+02 | 0.000E+00 | 4.100E+02 | 6.540E+01 | 8.760E+02 | 0.000E+00 | 3.980E+02 |
| BA-139 | 1.480E+00 | 9.840E-04 | 0.000E+00 | 5.920E-04 | 5.950E+03 | 5.100E+04 | 0.000E+00 | 4.300E-02 |
| BA-140 | 5.600E+04 | 5.600E+01 | 0.000E+00 | 1.340E+01 | 1.600E+06 | 3.840E+04 | 0.000E+00 | 2.900E+03 |
| BA-141 | 1.570E-01 | 1.080E-04 | 0.000E+00 | 6.500E-05 | 2.970E+03 | 4.750E+03 | 0.000E+00 | 4.970E-03 |
| BA-142 | 3.980E-02 | 3.300E-05 | 0.000E+00 | 1.900E-05 | 1.550E+03 | 6.930E+02 | 0.000E+00 | 1.960E-03 |
| LA-140 | 5.050E+02 | 2.000E+02 | 0.000E+00 | 0.000E+00 | 1.680E+05 | 8.480E+04 | 0.000E+00 | 5.150E+01 |
| LA-142 | 1.030E+00 | 3.770E-01 | 0.000E+00 | 0.000E+00 | 8.220E+03 | 5.950E+04 | 0.000E+00 | 9.040E-02 |
| CE-141 | 2.770E+04 | 1.670E+04 | 0.000E+00 | 5.250E+03 | 5.170E+05 | 2.160E+04 | 0.000E+00 | 1.990E+03 |
| CE-143 | 2.930E+02 | 1.930E+02 | 0.000E+00 | 5.640E+01 | 1.160E+05 | 4.970E+04 | 0.000E+00 | 2.210E+01 |
| CE-144 | 3.190E+06 | 1.210E+06 | 0.000E+00 | 5.380E+05 | 9.840E+06 | 1.480E+05 | 0.000E+00 | 1.760E+05 |
| PR-143 | 1.400E+04 | 5.240E+03 | 0.000E+00 | 1.970E+03 | 4.330E+05 | 3.720E+04 | 0.000E+00 | 6.990E+02 |
| PR-144 | 4.790E-02 | 1.850E-02 | 0.000E+00 | 6.720E-03 | 1.610E+03 | 4.280E+03 | 0.000E+00 | 2.410E-03 |
| ND-147 | 7.940E+03 | 8.130E+03 | 0.000E+00 | 3.150E+03 | 3.220E+05 | 3.120E+04 | 0.000E+00 | 5.000E+02 |
| W-187 | 1.300E+01 | 9.020E+00 | 0.000E+00 | 0.000E+00 | 3.960E+04 | 3.560E+04 | 0.000E+00 | 3.120E+00 |
| NP-239 | 3.710E+02 | 3.320E+01 | 0.000E+00 | 6.620E+01 | 5.950E+04 | 2.490E+04 | 0.000E+00 | 1.880E+01 |

# APPENDIX J

## $R_i$ Infant Dose Factors for use in the Gaseous Dose Calculations

| Agegroup: | INFANT | Pathway: | Ground Plane Deposition (GPD) | | | Units: | $m^2$·mrem/yr / µCi/sec | |
|---|---|---|---|---|---|---|---|---|
| **Nuclide** | **Bone** | **Liver** | **Thyroid** | **Kidney** | **Lung** | **Gilli** | **Skin** | **Total Body** |
| H-3 | 0.000E+00 | 0.000E+00 | 0.000E+00 | 0.000E+00 | 0.000E+00 | 0.000E+00 | 0.000E+00 | 0.000E+00 |
| C-14 | 0.000E+00 | 0.000E+00 | 0.000E+00 | 0.000E+00 | 0.000E+00 | 0.000E+00 | 0.000E+00 | 0.000E+00 |
| NA-24 | 1.190E+07 | 1.190E+07 | 1.190E+07 | 1.190E+07 | 1.190E+07 | 1.190E+07 | 1.390E+07 | 1.190E+07 |
| P-32 | 0.000E+00 | 0.000E+00 | 0.000E+00 | 0.000E+00 | 0.000E+00 | 0.000E+00 | 0.000E+00 | 0.000E+00 |
| CR-51 | 4.660E+06 | 4.660E+06 | 4.660E+06 | 4.660E+06 | 4.660E+06 | 4.660E+06 | 5.510E+06 | 4.660E+06 |
| MN-54 | 1.390E+09 | 1.390E+09 | 1.390E+09 | 1.390E+09 | 1.390E+09 | 1.390E+09 | 1.630E+09 | 1.390E+09 |
| MN-56 | 9.020E+05 | 9.020E+05 | 9.020E+05 | 9.020E+05 | 9.020E+05 | 9.020E+05 | 1.070E+06 | 9.020E+05 |
| FE-55 | 0.000E+00 | 0.000E+00 | 0.000E+00 | 0.000E+00 | 0.000E+00 | 0.000E+00 | 0.000E+00 | 0.000E+00 |
| FE-59 | 2.730E+08 | 2.730E+08 | 2.730E+08 | 2.730E+08 | 2.730E+08 | 2.730E+08 | 3.210E+08 | 2.730E+08 |
| CO-58 | 3.790E+08 | 3.790E+08 | 3.790E+08 | 3.790E+08 | 3.790E+08 | 3.790E+08 | 4.440E+08 | 3.790E+08 |
| CO-60 | 2.150E+10 | 2.150E+10 | 2.150E+10 | 2.150E+10 | 2.150E+10 | 2.150E+10 | 2.530E+10 | 2.150E+10 |
| NI-63 | 0.000E+00 | 0.000E+00 | 0.000E+00 | 0.000E+00 | 0.000E+00 | 0.000E+00 | 0.000E+00 | 0.000E+00 |
| NI-65 | 2.970E+05 | 2.970E+05 | 2.970E+05 | 2.970E+05 | 2.970E+05 | 2.970E+05 | 3.450E+05 | 2.970E+05 |
| CU-64 | 6.070E+05 | 6.070E+05 | 6.070E+05 | 6.070E+05 | 6.070E+05 | 6.070E+05 | 6.880E+05 | 6.070E+05 |
| ZN-65 | 7.470E+08 | 7.470E+08 | 7.470E+08 | 7.470E+08 | 7.470E+08 | 7.470E+08 | 8.590E+08 | 7.470E+08 |
| ZN-69 | 0.000E+00 | 0.000E+00 | 0.000E+00 | 0.000E+00 | 0.000E+00 | 0.000E+00 | 0.000E+00 | 0.000E+00 |
| BR-83 | 4.870E+03 | 4.870E+03 | 4.870E+03 | 4.870E+03 | 4.870E+03 | 4.870E+03 | 7.080E+03 | 4.870E+03 |
| BR-84 | 2.030E+05 | 2.030E+05 | 2.030E+05 | 2.030E+05 | 2.030E+05 | 2.030E+05 | 2.360E+05 | 2.030E+05 |
| BR-85 | 0.000E+00 | 0.000E+00 | 0.000E+00 | 0.000E+00 | 0.000E+00 | 0.000E+00 | 0.000E+00 | 0.000E+00 |
| RB-86 | 8.990E+06 | 8.990E+06 | 8.990E+06 | 8.990E+06 | 8.990E+06 | 8.990E+06 | 1.030E+07 | 8.990E+06 |
| RB-88 | 3.310E+04 | 3.310E+04 | 3.310E+04 | 3.310E+04 | 3.310E+04 | 3.310E+04 | 3.780E+04 | 3.310E+04 |
| RB-89 | 1.230E+05 | 1.230E+05 | 1.230E+05 | 1.230E+05 | 1.230E+05 | 1.230E+05 | 1.480E+05 | 1.230E+05 |
| SR-89 | 2.160E+04 | 2.160E+04 | 2.160E+04 | 2.160E+04 | 2.160E+04 | 2.160E+04 | 2.510E+04 | 2.160E+04 |
| SR-90 | 0.000E+00 | 0.000E+00 | 0.000E+00 | 0.000E+00 | 0.000E+00 | 0.000E+00 | 0.000E+00 | 0.000E+00 |
| SR-91 | 2.150E+06 | 2.150E+06 | 2.150E+06 | 2.150E+06 | 2.150E+06 | 2.150E+06 | 2.510E+06 | 2.150E+06 |

# APPENDIX J

## $R_i$ Infant Dose Factors for use in the Gaseous Dose Calculations

| Agegroup: | INFANT | Pathway: | Ground Plane Deposition (GPD) | | | Units: | $m^2$·mrem/yr / µCi/sec | |
|---|---|---|---|---|---|---|---|---|
| **Nuclide** | **Bone** | **Liver** | **Thyroid** | **Kidney** | **Lung** | **Gilli** | **Skin** | **Total Body** |
| SR-92 | 7.770E+05 | 7.770E+05 | 7.770E+05 | 7.770E+05 | 7.770E+05 | 7.770E+05 | 8.630E+05 | 7.770E+05 |
| Y-90 | 4.490E+03 | 4.490E+03 | 4.490E+03 | 4.490E+03 | 4.490E+03 | 4.490E+03 | 5.310E+03 | 4.490E+03 |
| Y-91 | 1.070E+06 | 1.070E+06 | 1.070E+06 | 1.070E+06 | 1.070E+06 | 1.070E+06 | 1.210E+06 | 1.070E+06 |
| Y-91M | 1.000E+05 | 1.000E+05 | 1.000E+05 | 1.000E+05 | 1.000E+05 | 1.000E+05 | 1.160E+05 | 1.000E+05 |
| Y-92 | 1.800E+05 | 1.800E+05 | 1.800E+05 | 1.800E+05 | 1.800E+05 | 1.800E+05 | 2.140E+05 | 1.800E+05 |
| Y-93 | 1.830E+05 | 1.830E+05 | 1.830E+05 | 1.830E+05 | 1.830E+05 | 1.830E+05 | 2.510E+05 | 1.830E+05 |
| ZR-95 | 2.450E+08 | 2.450E+08 | 2.450E+08 | 2.450E+08 | 2.450E+08 | 2.450E+08 | 2.840E+08 | 2.450E+08 |
| ZR-97 | 2.960E+06 | 2.960E+06 | 2.960E+06 | 2.960E+06 | 2.960E+06 | 2.960E+06 | 3.440E+06 | 2.960E+06 |
| NB-95 | 1.370E+08 | 1.370E+08 | 1.370E+08 | 1.370E+08 | 1.370E+08 | 1.370E+08 | 1.610E+08 | 1.370E+08 |
| MO-99 | 3.990E+06 | 3.990E+06 | 3.990E+06 | 3.990E+06 | 3.990E+06 | 3.990E+06 | 4.630E+06 | 3.990E+06 |
| TC-99M | 1.840E+05 | 1.840E+05 | 1.840E+05 | 1.840E+05 | 1.840E+05 | 1.840E+05 | 2.110E+05 | 1.840E+05 |
| TC-101 | 2.040E+04 | 2.040E+04 | 2.040E+04 | 2.040E+04 | 2.040E+04 | 2.040E+04 | 2.260E+04 | 2.040E+04 |
| RU-103 | 1.080E+08 | 1.080E+08 | 1.080E+08 | 1.080E+08 | 1.080E+08 | 1.080E+08 | 1.260E+08 | 1.080E+08 |
| RU-105 | 6.360E+05 | 6.360E+05 | 6.360E+05 | 6.360E+05 | 6.360E+05 | 6.360E+05 | 7.210E+05 | 6.360E+05 |
| RU-106 | 4.220E+08 | 4.220E+08 | 4.220E+08 | 4.220E+08 | 4.220E+08 | 4.220E+08 | 5.070E+08 | 4.220E+08 |
| AG-110M | 3.440E+09 | 3.440E+09 | 3.440E+09 | 3.440E+09 | 3.440E+09 | 3.440E+09 | 4.010E+09 | 3.440E+09 |
| TE-125M | 1.550E+06 | 1.550E+06 | 1.550E+06 | 1.550E+06 | 1.550E+06 | 1.550E+06 | 2.130E+06 | 1.550E+06 |
| TE-127 | 2.980E+03 | 2.980E+03 | 2.980E+03 | 2.980E+03 | 2.980E+03 | 2.980E+03 | 3.280E+03 | 2.980E+03 |
| TE-127M | 9.160E+04 | 9.160E+04 | 9.160E+04 | 9.160E+04 | 9.160E+04 | 9.160E+04 | 1.080E+05 | 9.160E+04 |
| TE-129 | 2.620E+04 | 2.620E+04 | 2.620E+04 | 2.620E+04 | 2.620E+04 | 2.620E+04 | 3.100E+04 | 2.620E+04 |
| TE-129M | 1.980E+07 | 1.980E+07 | 1.980E+07 | 1.980E+07 | 1.980E+07 | 1.980E+07 | 2.310E+07 | 1.980E+07 |
| TE-131 | 2.920E+04 | 2.920E+04 | 2.920E+04 | 2.920E+04 | 2.920E+04 | 2.920E+04 | 3.450E+07 | 2.920E+04 |
| TE-131M | 8.030E+06 | 8.030E+06 | 8.030E+06 | 8.030E+06 | 8.030E+06 | 8.030E+06 | 9.460E+06 | 8.030E+06 |
| TE-132 | 4.230E+06 | 4.230E+06 | 4.230E+06 | 4.230E+06 | 4.230E+06 | 4.230E+06 | 4.980E+06 | 4.230E+06 |
| I-130 | 5.510E+06 | 5.510E+06 | 5.510E+06 | 5.510E+06 | 5.510E+06 | 5.510E+06 | 6.690E+06 | 5.510E+06 |

# APPENDIX J

## $R_i$ Infant Dose Factors for use in the Gaseous Dose Calculations

| Agegroup: | INFANT | Pathway: | Ground Plane Deposition (GPD) | | | Units: | $m^2$·mrem/yr / µCi/sec | |
|---|---|---|---|---|---|---|---|---|
| **Nuclide** | **Bone** | **Liver** | **Thyroid** | **Kidney** | **Lung** | **Gilli** | **Skin** | **Total Body** |
| I-131 | 1.720E+07 | 1.720E+07 | 1.720E+07 | 1.720E+07 | 1.720E+07 | 1.720E+07 | 2.090E+07 | 1.720E+07 |
| I-132 | 1.250E+06 | 1.250E+06 | 1.250E+06 | 1.250E+06 | 1.250E+06 | 1.250E+06 | 1.470E+06 | 1.250E+06 |
| I-133 | 2.450E+06 | 2.450E+06 | 2.450E+06 | 2.450E+06 | 2.450E+06 | 2.450E+06 | 2.980E+06 | 2.450E+06 |
| I-134 | 4.470E+05 | 4.470E+05 | 4.470E+05 | 4.470E+05 | 4.470E+05 | 4.470E+05 | 5.300E+05 | 4.470E+05 |
| I-135 | 2.530E+06 | 2.530E+06 | 2.530E+06 | 2.530E+06 | 2.530E+06 | 2.530E+06 | 2.950E+06 | 2.530E+06 |
| CS-134 | 6.860E+09 | 6.860E+09 | 6.860E+09 | 6.860E+09 | 6.860E+09 | 6.860E+09 | 8.000E+09 | 6.860E+09 |
| CS-136 | 1.510E+08 | 1.510E+08 | 1.510E+08 | 1.510E+08 | 1.510E+08 | 1.510E+08 | 1.710E+08 | 1.510E+08 |
| CS-137 | 1.030E+10 | 1.030E+10 | 1.030E+10 | 1.030E+10 | 1.030E+10 | 1.030E+10 | 1.200E+10 | 1.030E+10 |
| CS-138 | 3.590E+05 | 3.590E+05 | 3.590E+05 | 3.590E+05 | 3.590E+05 | 3.590E+05 | 4.100E+05 | 3.590E+05 |
| BA-139 | 1.060E+05 | 1.060E+05 | 1.060E+05 | 1.060E+05 | 1.060E+05 | 1.060E+05 | 1.190E+05 | 1.060E+05 |
| BA-140 | 2.050E+07 | 2.050E+07 | 2.050E+07 | 2.050E+07 | 2.050E+07 | 2.050E+07 | 2.350E+07 | 2.050E+07 |
| BA-141 | 4.170E+04 | 4.170E+04 | 4.170E+04 | 4.170E+04 | 4.170E+04 | 4.170E+04 | 4.750E+04 | 4.170E+04 |
| BA-142 | 4.490E+04 | 4.490E+04 | 4.490E+04 | 4.490E+04 | 4.490E+04 | 4.490E+04 | 5.110E+04 | 4.490E+04 |
| LA-140 | 1.920E+07 | 1.920E+07 | 1.920E+07 | 1.920E+07 | 1.920E+07 | 1.920E+07 | 2.180E+07 | 1.920E+07 |
| LA-142 | 7.600E+05 | 7.600E+05 | 7.600E+05 | 7.600E+05 | 7.600E+05 | 7.600E+05 | 9.120E+05 | 7.600E+05 |
| CE-141 | 1.370E+07 | 1.370E+07 | 1.370E+07 | 1.370E+07 | 1.370E+07 | 1.370E+07 | 1.540E+07 | 1.370E+07 |
| CE-143 | 2.310E+06 | 2.310E+06 | 2.310E+06 | 2.310E+06 | 2.310E+06 | 2.310E+06 | 2.630E+06 | 2.310E+06 |
| CE-144 | 6.950E+07 | 6.950E+07 | 6.950E+07 | 6.950E+07 | 6.950E+07 | 6.950E+07 | 8.040E+07 | 6.950E+07 |
| PR-143 | 0.000E+00 | 0.000E+00 | 0.000E+00 | 0.000E+00 | 0.000E+00 | 0.000E+00 | 0.000E+00 | 0.000E+00 |
| PR-144 | 1.830E+03 | 1.830E+03 | 1.830E+03 | 1.830E+03 | 1.830E+03 | 1.830E+03 | 2.110E+03 | 1.830E+03 |
| ND-147 | 8.390E+06 | 8.390E+06 | 8.390E+06 | 8.390E+06 | 8.390E+06 | 8.390E+06 | 1.010E+07 | 8.390E+06 |
| W-187 | 2.350E+06 | 2.350E+06 | 2.350E+06 | 2.350E+06 | 2.350E+06 | 2.350E+06 | 2.730E+06 | 2.350E+06 |
| NP-239 | 1.710E+06 | 1.710E+06 | 1.710E+06 | 1.710E+06 | 1.710E+06 | 1.710E+06 | 1.980E+06 | 1.710E+06 |