VALMET Automation Control Systems Division **FAX COVER SHEET**

Valmet Automation (USA) Inc.
3100 Medlock Bridge Road
Norcross, GA 30071
FAX: 770-446-8794
PHONE: 770-446-7818

DATE: 5-21-96

TO: ERIC JAMESON

COMPANY: GADNR

FAX: 404-362-2653

CC:

FROM: Jim Hoey

TOTAL NUMBER OF PAGES (Including this cover sheet): 12

Message:

SÄTEILYTURVAKESKUS
FINNISH CENTRE FOR RADIATION
AND NUCLEAR SAFETY
P.O. BOX 14 FIN-00881 HELSINKI
Tel. Int.+ 358 0 759881
Telefax Int.+ 358 0 7598 8248

PROTOCOL OF MEASUREMENT

24.5.1996 60/300/96

MEASUREMENTS OF STRAY RADIATION OF BW-5h23 BASIS WEIGHT SENSOR

Sensor manufacturer:	Tapio Technologies Oy, Espoo, Finland
Sensor type:	BW-5h23
Serial number:	96-1
Source code:	PHC80955 (Amersham International plc)
Source number:	ER 619
Radionuclide:	^{147}Pm
Activity:	18.5 GBq
Date of measurement:	24.5.1996
Measured by:	Seppo Väisälä
Measuring equipment:	Smart ION Ion Chamber Survey Meter manufactured by Mini-Instruments Ltd. England. The entrance window of the Smart ION has a nominal density thickness of 7 mg/cm^2 for measurement of superficial dose equivalent H(0.07) and β-dose rate. A sliding window shield (293 mg/cm^2) provides build-up to facilitate measurement of ambient dose equivalent quantity H*(10).

There were movable guiding strips on both sides of the sensor measuring slit (see figure in attachment 1). The measurement was made with the strips in the upmost position giving maximum dose rate values and also with the strips in the normal position.

The results of the measurements are given in attached sheets.

Seppo Väisälä
Chief Inspector, Radioisotope Applications

Attachments: Measurement forms (5 sheets)
Kalibrointitodistus (Certificate of Calibration) MN/30/96

SÄTEILYTURVAKESKUS (STUK)
Strålsäkerhetscentralen
Finnish Centre for Radiation and Nuclear Safety - Helsinki Finland
Radiation Metrology Laboratory

KALIBROINTITODISTUS
Certificate of Calibration

Nro MN/30/96 Sivu 1 (2)
No. Page 1 of

Tilaaja/ Customer
Finnish Centre for Radiation and Nuclear Safety
Radiation Safety Department

Viite/ Reference
Order: Seppo Väisälä

Kalibroitu laite/ Instrument calibrated
Radiation protection meter: Smart Ion Model 2100, No. 002144

Kalibrointi suoritettu, pvm./ Calibration completed, date
23 May 1996

TABLE. Calibration results.

Dose equivalent rate, µSv/h	Calibration factor
10	1.00
30	1.03
100	1.05
300	1.07
1000	1.03

The indication of the meter has to be multiplied by the calibration factor in order to get the correct dose equivalent rate.

In the calibration the meter was positioned in collimated ^{137}Cs gamma beams so that the bottom of the meter was towards the radiation source and perpendicular to the beam axis. The metal window on the meter bottom was closed. The calibration distance was 2.9 - 8.9 m and the corresponding radiation field size at this distance ø 29 - 89 cm. The cross marking on the side of the meter was taken to be the reference point.

Päiväys/ Date: 23 May 1996

Allekirjoitus/ Signed: Erkki Rantanen

Senior Inspector Erkki Rantanen

PL/P.O.BOX 14
FIN 00881 HELSINKI
Puh./Tel. (90) 759881
Telefax (90) 75988480

SÄTEILYTURVAKESKUS (STUK)
Strålsäkerhetscentralen
Finnish Centre for Radiation and Nuclear Safety - Helsinki Finland
Radiation Metrology Laboratory

KALIBROINTITODISTUS
Certificate of Calibration

Nro MN/30/96 Sivu 2
No. Page

The basic quantity measured in the calibration was the exposure from which the dose equivalent was obtained by multiplying the exposure with a factor of 10.5 μSv/mR. The dose equivalent means the Ambient Dose Equivalent H*(10).

The exposure was determined by an ionization chamber which has been calibrated by the National Physical Laboratory (NPL, UK). The overall uncertainty of the exposure with a multiplying factor of 2 is about 3 %. The uncertainty is expressed in accordance with the Recommendation 1, CI-1981 of the International Committee on Weights and Measures (CIPM).

Päiväys/Date Allekirjoitus/Signed

Radioactive source test report

product code	description	customer order no	BSI/ISO classification
PHC80955	PROMETHIUM-147 DISC SOURCE	S-84539 01	C33222
AI item no: BE9479 1		customer: SONAR OY, P O BOX 5, ESPOO 02201 FINLAND	special form certificate no
source model no: PHC.C1	nominal activity: 500mCi 18.5GBq		recommended working life: 5 YEARS

serial no / batch no	measurement 1 NOMINAL ACTI	date	measurement 2	date	test L	test	test A
ER619	18.50	04/04/96			04/04/96		04/04/96
ER620	18.50	04/04/96			04/04/96		04/04/96

notes

DATE OF DESPATCH 12 APRIL 1996

refer to handling instruction no HI 001

signature [signature] position SECTION MANAGER date 10/04/96

*this classification complies with BS5288:1976, which is in agreement with ISO2919
(see overleaf for definition and description of tests)

Amersham International plc Telephone (01494) 544000

TAPIO TECHNOLOGIES OY 9.3.-95 MOL

FUNCTIONAL DESCRIPTION OF BASIS WEIGHT SENSOR BW-5h23

The Basis Weight Sensor BW-5h23 will be used in Tapio Paper Variability Analyzer. The sensor will measure absorption of low energy beta radiation of Promethium-147 source to calculate basis weight of paper.
The radiation source is Amersham PHC.80952 with a nominal activity of 200 mCi or PHC.80955 with a nominal activity of 500mCi.
The 200mCi source will be used with measuring apertures of ϕ5 and ϕ10mm, the 500mCi source will be used when the customer needs a small aperture e.g. ϕ2mm and ϕ10. The maximum beta energy of the radiation is 225keV the average is about 70keV.

typo. see e-mail dated 5/24/96 F: Jim M T: Eric J.

The main parts of the sensor are made of aluminium (97.4 % Al). The shutter (17.) of the sensor is controlled by the measurement computer so it is impossible to turn the shutter open manually without disassembling some parts of the sensor. The interface board (28.) has been designed so that the power off, shutter open and shutter off have different status values, hence the computer notifies and warns of error conditions. When the shutter is commanded open on computer the command is send to the interface board as logical levels through two wires and the interface board activates the torque solenoid (52.). The shutter disk (17.) turns so that an open hole in it gets under the radiation source (26.). The position indicating disk (12.) connected on the other end of the axle of the torque solenoid turns at the position that gives a "shutter open" indication to the position sensor (27.). The signals of the position sensor are interpreted by the interface board and send to the computer through two wires as new status information. The computer interface on the interface board is isolated to give immunity to ground loops and to protect electronic circuits. The open state of the shutter is indicated with a red light and the off or closed state of the shutter is indicated with a green light. These lights are seen on the upper corners of the top cover plate (5.) when operating.
The gap where paper web runs is 1.5mm wide, so it is not possible for shutter disk (2mm thick) to drop off in case of defect in torque solenoid and it is not possible for paper to touch the source.
The aperture of the sensor is manually controlled turning the the aperture selection knob (4.) so that the wanted aperture on aperture selection disk (6.) gets above the detector.
In this sensor the manual control of the aperture disk has no effect to the shutter mechanism or in shutter control electronics.

The radiation source (26.) is in the lead housing (53.). The retainer of the radiation source (14.) carries the source with a 3mm threaded tap through the lead housing. Around the upper part of the detector housing there is a lead ring (54.) with 10mm wall thickness.
There is a lead shield (16.) under the detector housing to stop the radiation that is coming down through the detector (23.), the holder of preamplifier (13.) and preamplifier boards. Nominal thickness of the lead shield is 10mm.
The paper guides (58.) made of 5mm thick steel are fixed on both sides of the body (1.) to press the paper down. The guides cut down scattered radiation coming out of the gap too.

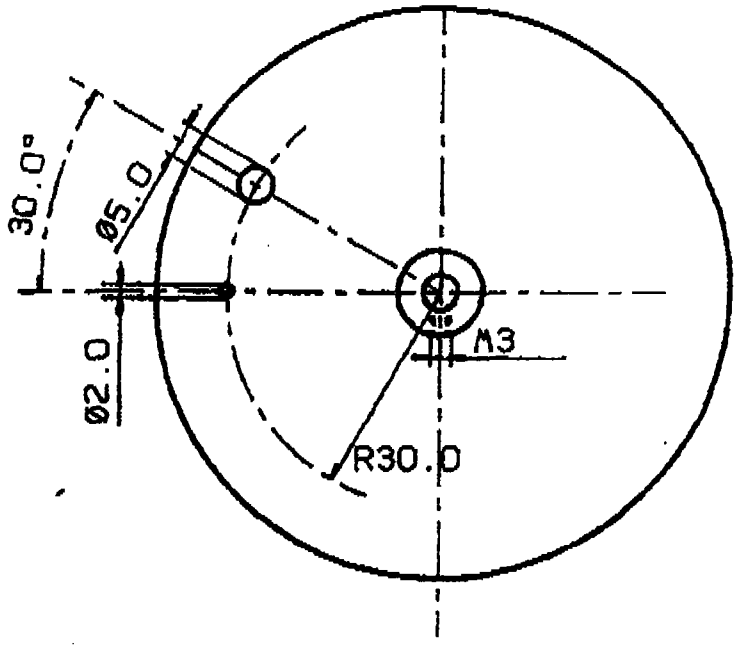

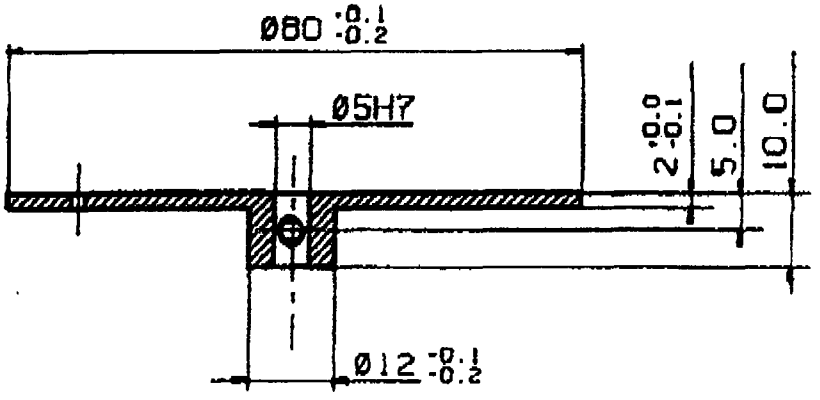

		Aineen AL-ELOKS. MU	Laatija MOL	Päivämäärä 19.1.-95

TAPIO TECHNOLOGIES	BASIS WEIGHT SENSOR BW-5h23 APERTURE SELECTION DISK	1 : 1	Piirtäjä BV-5h23 Nro 5TBW3-06-4M

BASIS WEIGHT SENSOR RADIATION TEST REPORT

DIST./DIR.	A	B	C	D	E	F	G	H	I	J	K
0 cm	—	—	1	—	—	—	1,5	—	—	—	—
5 cm	—	—	—	—	—	—	—	—	—	—	—
10 cm											
30 cm											

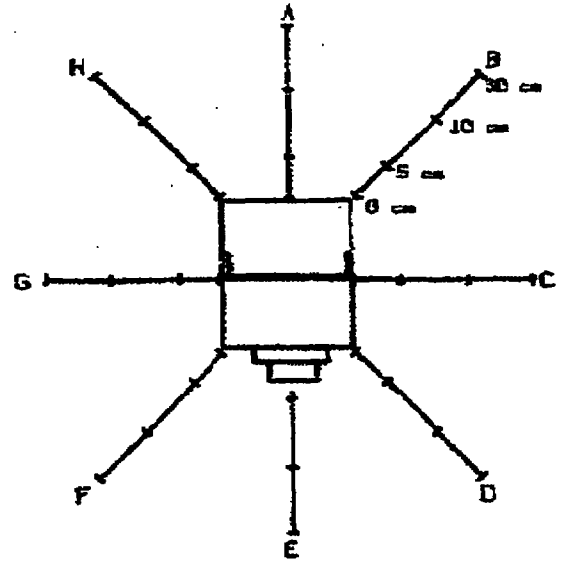

FRONT VIEW

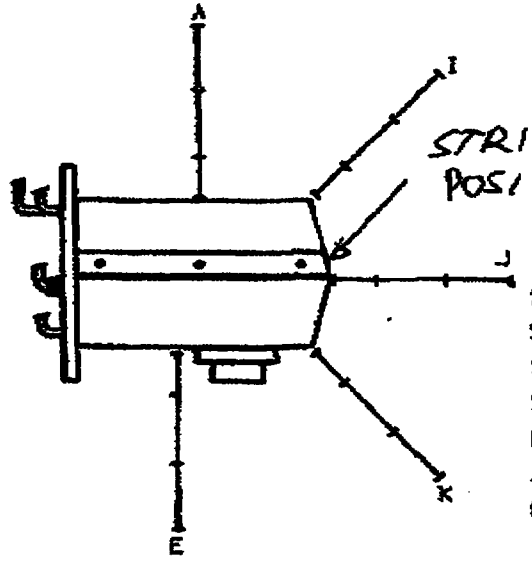

UNIT [μSv/h]

— < 1 μSv/h

STRIPS IN THE UPMOST POSITION

SENSOR TYPE: BW-5h23
SERIAL NO : 96-1
SOURCE TYPE: PHC 80955
SOURCE NO : ER 619
DATE : 24.5.1996
MEASURED BY: S. [illegible]
GAUGE TYPE : SMART ION
WINDOW : 7 mg/cm²
SHUTTER : CLOSED
BACKGROUND : 0.4 μSv/h

TAPIO TECHNOLOGIES OY. ESPOO FINLAND

BASIS WEIGHT SENSOR RADIATION TEST REPORT

DIST./DIR.	A	B	C	D	E	F	G	H	I	J	K
0 cm	—	—	11	—	—	—	13	—	—	—	—
5 cm	—	—	3	—	—	—	4	—	—		
10 cm		—	—	—	—	—	—	—	—	—	—
30 cm											

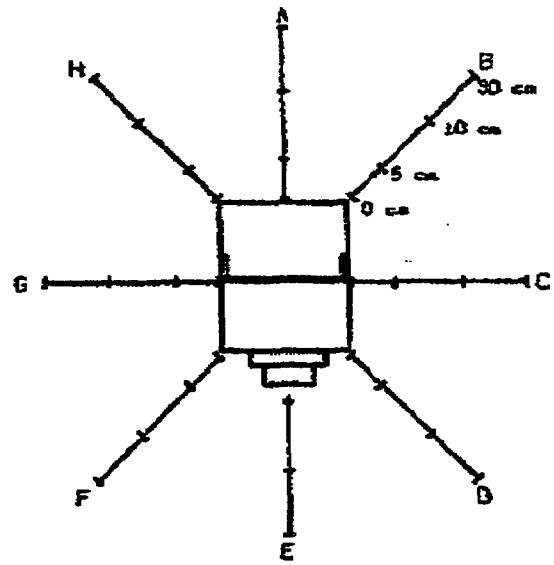

FRONT VIEW

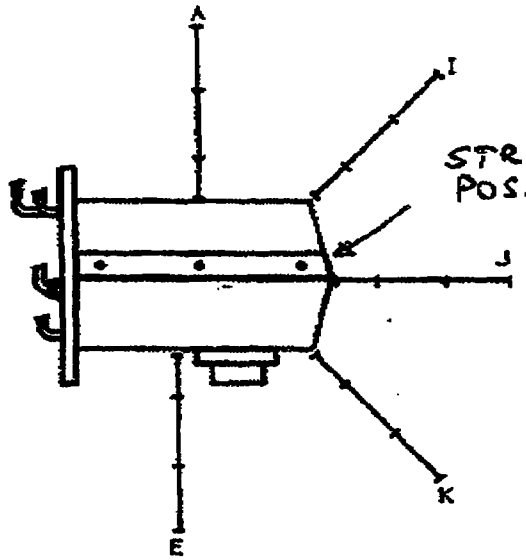

UNIT [μSv/h]

~~X~~ — < 1 μSv/h

STRIPS IN THE NORMAL POSITION

SENSOR TYPE: BW-5h23
SERIAL NO : 96-1
SOURCE TYPE: PHC 80955
SOURCE NO : ER 619
DATE : 24.5.1996
MEASURED BY: S. UÄKSKE
GAUGE TYPE : SMART ION
WINDOW : 7 mg/cm²
SHUTTER : OPEN
BACKGROUND : 0.4 μSv/h

TAPIO TECHNOLOGIES OY. ESPOO FINLAND

BASIS WEIGHT SENSOR RADIATION TEST REPORT

DIST./DIR.	A	B	C	D	E	F	G	H	I	J	K
0 cm			54				66				
5 cm			14				17				
10 cm			2.5				2.5				
30 cm											

UNIT [μSv/h]

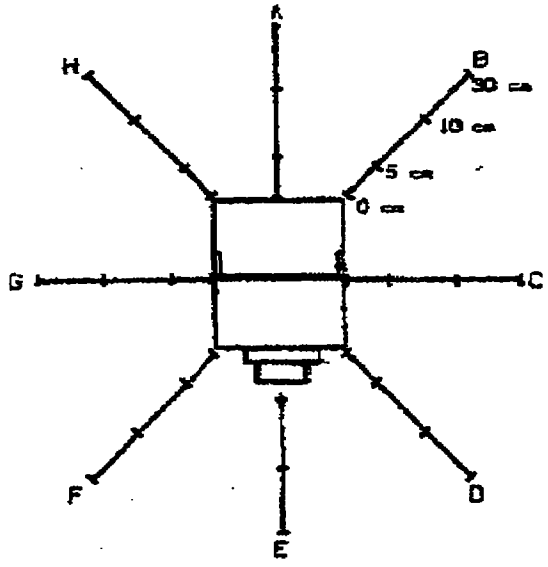

FRONT VIEW

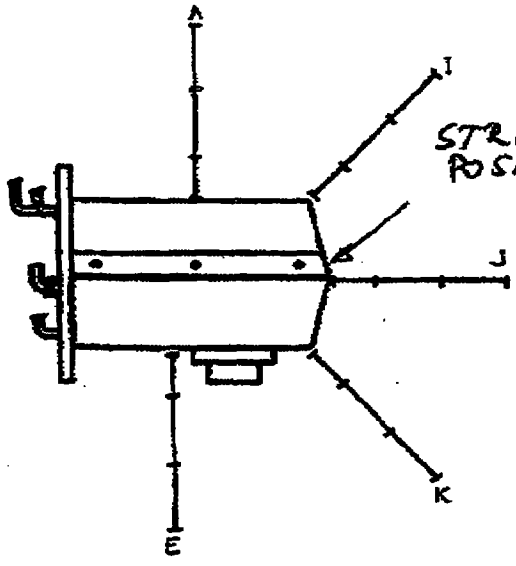

STRIPS IN THE UPMOST POSITION

SENSOR TYPE: BW-5h 23
SERIAL NO : 96-1
SOURCE TYPE: PHC 80955
SOURCE NO : EB 619
DATE : 24.5.1996
MEASURED BY: S. VÄKSÄLÄ
GAUGE TYPE : SMART ION
WINDOW : 7 mg/cm²
SHUTTER : OPEN
BACKGROUND : 0.4 μSv/h

TAPIO TECHNOLOGIES OY. ESPOO FINLAND

BASIS VEIGHT SENSOR RADIATION TEST REPORT

DIST./DIR.	A	B	C	D	E	F	G	H	I	J	K
0 cm	—	—	/	—	—	—	/	—	—	—	—
5 cm	—	—	—	—	—	—	—	—	—	—	—
10 cm											
30 cm											

UNIT [μSv/h]

— < 1 μSv/h

STRIPS IN THE UPMOST POSITION

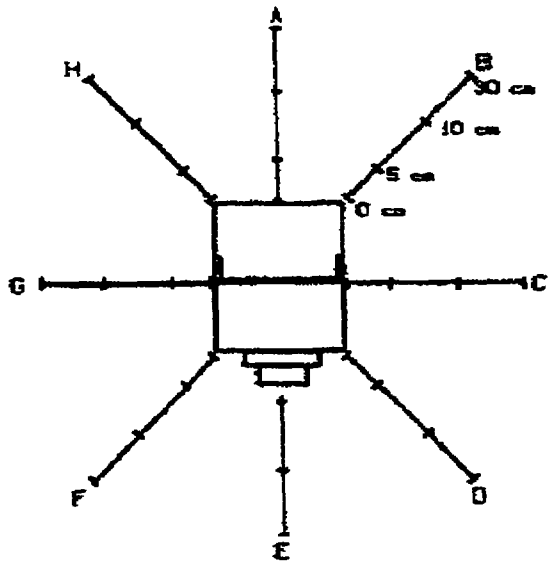

FRONT VIEW

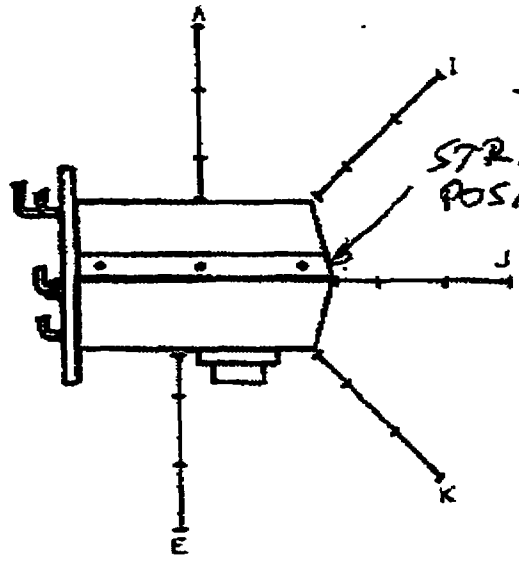

SENSOR TYPE: BW-5h23
SERIAL NO : 96-1
SOURCE TYPE: PHC 80955
SOURCE NO : ER 619
DATE : 24.5.1996
MEASURED BY: S. VÄISÄLÄ
GAUGE TYPE : SMART ION
WINDOW : 300 mg/cm²
SHUTTER : CLOSED
BACKGROUND : 0,4 μSv/h

TAPIO TECHNOLOGIES OY. ESPOO FINLAND

BASIS WEIGHT SENSOR RADIATION TEST REPORT

DIST./DIR.	A	B	C	D	E	F	G	H	I	J	K
0 cm	—	—	/	—	—	—	/	—	—	—	—
5 cm	—	—	—	—	—	—	—	—	—	—	—
10 cm											
30 cm											

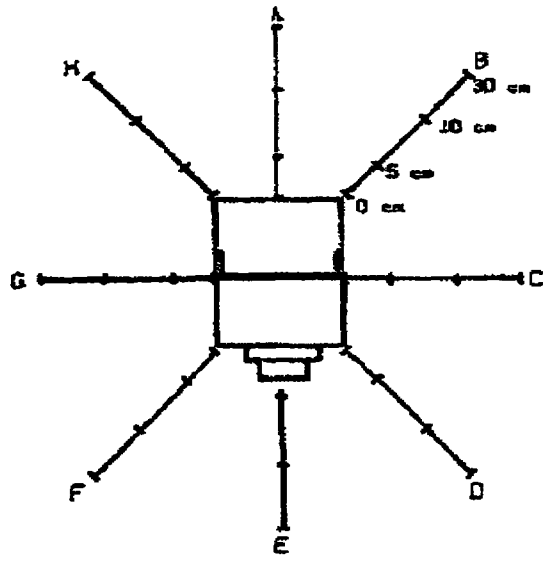

FRONT VIEW

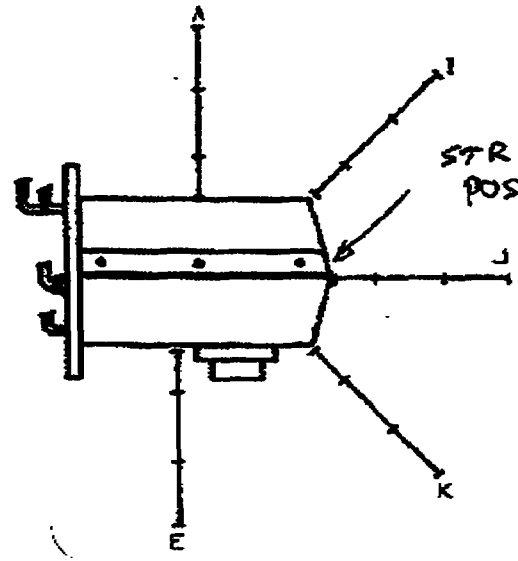

UNIT [μSv/h]

— < 1 μSv/h

STRIPS IN THE UPMOST POSITION

SENSOR TYPE: BW-5h23
SERIAL NO : 96-1
SOURCE TYPE: PHC 80955
SOURCE NO : ER 619
DATE : 24.5.1996
MEASURED BY: S. VIRKKALA
GAUGE TYPE : SHORT ION
WINDOW : 300 mg/cm²
SHUTTER : OPEN
BACKGROUND : 0.4 μSv/h

TAPIO TECHNOLOGIES OY. ESPOO FINLAND