Technologies

Finland
Tel: +358-0-4354 2008
Fax: +358-0-4354 3131

RECEIVED
JUN 28 1993
RADIOACTIVE MATERIALS PROGRAM

RETURN FAX: +358-0-4354 3131

TELEFAX MESSAGE

TO: Georgia Department of Natural Resources

ATT: Mr. Slocumb

FAX NO:

DATE:. Jun 18, 1993

NUMBER OF PAGES: (incl. this sheet) x

CC.: x
x

FROM: Jukka Perento

RE: Lisence application for Tapio Paper Variabilty Analyzer, State of Georgia

We finally got the information together. I'm sorry that this has taken quite a long, but we have been tide up with our business efforts elsewhere in the world (we are selling the device globaly)

So answers,
I'm using the same numbers to answer to your questions as you did:

1. See enclosed
2. OK
3. See enclosed
4. See enclosed
5. See enclosed
6. See enclosed
7. OK
8. See enclosed
9. See enclosed
10. Enclosed pls find the corrected version. The "code" on "US Nuclear Reg....."-label you asked is an adress of manufacturer - city, zip code and UK(=United Kingdom), but I have changed it anyway to the PHC.C1 (capsule x. 8095). The whole manual with corrected pages is enclosed.
Enclosed also a sample of the label we have been using on transducer itself, the bigger label will be aluminium and it will be riveted.
11. Due to small opening of transducer and slow speed of paper, material tested never comes to contact with radioactive source.
12. See enclosed
13. See enclosed
14. See enclosed
15. See enclosed

Hopefully you find everything satisfactory. Pls let us know as soon as possible any questions or needs you might have.

Br. Jukka Perento

STATEMENT **Apr 23,1993**

I assure that all the information submitted relative to basis weight sensor BW-2h54 is the same on the basis weight sensor BW-2h55 except for the changes indicated in our correspondence dated February 25, 1993

Tapio Makkonen
President
Tapio Technologies

Question 3, documents

Letters used are in reference to the document list on "Registry of Radioactive ...." draft.

Draft itself is OK other then on the 7th row you say that measuring gap is 1.55 mm actually it is 1.5.

A. There was no document from 1992 included, instead 1991. Assuming that 1991 is the letter meant for.

Since data is meant for BW-2h54 there are some missinformation, which has been corrected by the info from me.

Main things are that Makkonen Associates is not functional anymore and that Mr H. Makkonen is not with us any more.

B.Letter dated March 10 was not included in the pile you sent to us. Feb 28 letter concerns once again mostly the old BW-2h54 situation and Makkonen associates, that has been updated with my later letters. Forms etc. included to letter are Ok.

C. We did not get into agreement with ABB, so there is no need for this.

D. OK

E. Includes missinfo, since this talks about BW-2h54 and Makkonen Associates. Type of documents and other registery type of papers are OK.

F. OK

G. OK

H. OK

BW-2h55 Classification

ANSI classification for BW-2h55 Basis Weight Sensor:

ANSI - 12 - 599 - 999 - R1

The BW-2h55 Basis Weight Sensor is designed as an option in Tapio Paper Variability Analyzer. The analyzer is designed to be a laboratory device, hence the operating temperature is restricted to +18°C - +25°C. The BW-2h55 is not used separately so it is operating in normal room temperatures only. This gives 12.

The stray radiation measurement was performed by Robert E. Burns, Jr. and James M. O'Brien, Jr. of Atlan-Tech, Inc. on 21st October, 1992.
The classification is based on the results of this measurement for the older model BW-2h54. The changes in stray radiation are insignificant because the source, the housing of the source and the whole detector assembly as well as the measuring gap has been kept the same in model BW-2h55. The thickness and the diameter of the aperture disk is the same as in the older model (the aperture disk functions as a shutter for the radiation source in the OFF position).

Radiation source ON

The classification is based on the highest absorbed dose rate measured with a 7 mg/cm2 window (13.8 mrad/h) at the 5cm isodistance line on the left side of the sensor. At 30 cm there was no measurable exposure in any direction. Hence there can not be any stray radiation at 100 cm isodistance line. This gives 599.

Radiation source OFF

No stray radiation over background was measured when the radiation source was closed. This gives 999.

The BW-2h55 Basis Weight Sensor uses a radioactive source to make beta-radiation. The radiation source is PHC.80952 of Amersham International plc. The radiation source has run the safety performance tests according to ISO standard (ISO.2919) and has ISO classification C33222. This gives R1.

QUALITY CONTROL OF BW-2h55 Basis Weight Gauge

General

Also according to Finnish laws the manufacturer of this type of device must have a lisenced and responsible person available within the company in order to manufacture devices with radiation sources.

This person (in our case Mr Tapio Makkonen, the president of the company) has the responsibility of the whole manufacturing process. Also the company has to apply for the permit from the Finnish Center of Radiation and Nuclear Safety for the manufacturing. This permit we do have.

The personnel involved in manufacturing are highly skilled and machines used have numerical displays to ensure accurate dimensions.

The process can be divided to different sections:

1. Design
2. Material selection and receiving
3. Parts manufacturing and inspection
4. Anodization of parts and inspection
5. Assembly
6. Testing and radiation measurement

As mentioned the overall responsibility is Mr T. Makkonen's and each activity is responsible to report back (and forward, if needed) in process of all the things they think could or should be done better. This flow of information is in a small company like us easy to arrange, since everybody meets and talks anyway daily, so pulling together a meeting is an easy task.

1. Design

Design work is done only by Mr Makkonen, the lisenced person. Naturally designs are approved by the Finnish Center of Radiation and Nuclear Safety as well as before entering US market by You.

If any improvements are found necessary later in the process stage the persons there, are responsible to inform design. Any possible changes are informed immediately to appropriate officials.

2. Material selection and receiving inspection

Basically materials are selected in design phase, but to ensure the quality the material suppliers used are selected only among respected and known companies, who can provide the analysis of the material (Aluminium etc.).

All the material goes through a visual inspection when received. If needed material may be rejected. Inspection is performed by Mr Makkonen (lisenced person), therefore if changes are needed the right person knows about it immediately.

3. Parts manufacturing

All the parts are inspected visually and by measuring them with handheld measurement devices after they have been manufactured to ensure that tolerances are as designed. Any indifferencies or needs for changes are told to the responsible person.

The special parts made in lead - These parts are manufactured only under the direct supervisory of the responsible person. Parts are measured and visually inspected when ready, to ensure the tolerances and quality.

4. Anodization

All aluminium parts are treated by a method called anodization. This treatment increases the wear resistance of the parts plus gives the final tolerances to them.

After the treatment the parts are once again measured and visually inspected. All nonqualified parts are put aside and informed to responsible persons.

5. Assembly

The functionally and the way how the parts fit together are carefully inspected through the whole operation. Any misfits or nonfunctional parts are disqualified (in real life no bad parts have gotten this far) and informed to the responsible person.

6. Testing

Transducers for US market are measured by Finnish Center of Radiation and Nuclear Safety using both 7 mg/cm2 and 300 mg/cm2 measurements. Measurement report is always sent out with the transducer. (Other markets have not this requirement so in Finland we have been using 100 mg/cm2).

The shutter mechanism is tested by closing and opening it 50 -150 times to be absolutely sure of the functionality. This test includes all special situations as well eg. analyzer powered computer not or vice versa -> shutter closes etc.

And finally the whole analyzer including the BW-2h55 gauge goes through about 2 week long test period when all the functions of the analyzer are tested and verified.

Naturally if anything is noticed the responsible person is informed and the system will be disqualified or repaired.

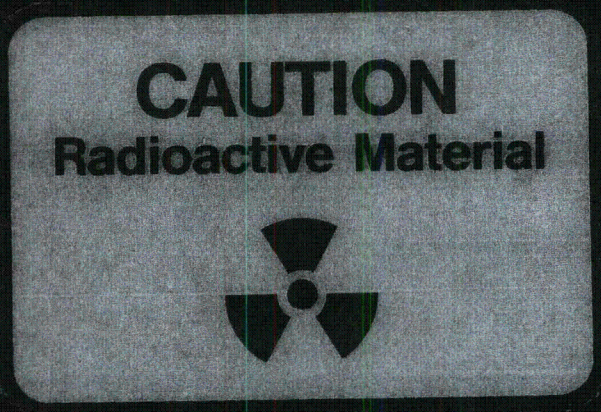

SAMPLE OF
THE LABEL
ON TRANSDUCER

TAPIO TECHNOLOGIES OY
28.4.-93 MOL

FUNCTIONAL DESCRIPTION OF BASIS WEIGHT SENSOR BW-2h55

The new Basis Weight Sensor BW-2h55 has been changed in comparison to the old type BW-2h54 so that the aperture selection is done completely by electric power, however the changes has been kept to a minimum. Hence the outer dimensions of the sensor are the same as in the old type except that the lengths of the Body (21.) and the Holder of PMT assembly (30.) have been encreased by 3mm, and of course the Aperture selection disk of the old type has been omitted. The top of the Body is covered with a large Top cover plate (1.) tightened with screws, so manual interference in aperture selection is not possible. The thickness of the Top cover plate (1.) is 1.5 mm and it is made of aluminium (97.4 % Al).
The Body (21.) is made of aluminium, its width is 85 mm, height is 58 mm and lengt 189.5 mm. The Radiation source (17.) is fixed to the Retainer of radiation source (13.) and the Lead housing (16.) is tightened between them.
The Retainer of radiation source (13.) is a cylinder made of steel (St - 50) , the diameter of the cylinder is 29 mm and its height is 20 mm and there is a 5mm long stud with M3 thread under the retainer (13.) which turns into the threads of the source (17.). There is a M3 thread on the top of the retainer (13.) to facilitate assembling and dissassembling.
The Radiation source (17.) is fixed in such a position that its active face is at 2.7 - 3 mm higher level than the lower face of the Body (21.) so that the Aperture disk (18.) turns freely around. The Lead housing (16.) gives additional radiation protection in horizontal directions and upwards, the thickness of the lead is 2.9 mm and 3.2 mm respectively. The Lead housing (16.) has two steel pins that fit into the holes of the Radiation source (17.) to prevent the source (17.) from turning when the Retainer of radiation source is screwed into it (the Lead housing (17.) is fixed to a special clamp-device during this operation).
At the lower face of the Body (21.) there is a 2.6 mm deep (upwards) cutting with 80 mm diameter for the Aperture disk (18.), the clearance between the upper face of the disk (18.) and the cutting is 0.2mm nominal. The edge of the Aperture disk (18.) covers completely the lower face of the Radiation source (17.) and surpasses the active area by 3.2 mm. The clearance between the disk (18.) and the source (17.) is 0.3 - 0.6 mm, hence radiation can not pass the edge of the Aperture disk (18.) to the measurement gap between the Body (21.) and the Holder of the PMT assembly (30.).

The measurement gap (for paper web) is the same as in the older model i.e. 1.5mm. Because the gap is only 1.5 mm high the Aperture disk (17.) (2 mm thick) can not come out of its cutting in the Body (21.) in a failure situation (if the disk gets loose etc.). This garantees also that the paper web can not come in touch with the Radiation source (17.) in failure situations. The gap is not adjustable, the Body (21.) and the Holder of PMT assembly are fixed to to the Mounting flange (20.) with two M6 Fastening screws (21., 31.) each.
The Mounting flange (20.) has two M6 threads, the BW-2h55 sensor is fastened to the PVA with two M6 screws from inside of the PVA; only persons having the rear door keys of the PVA can remove the sensor.
The detector (the PMT assembly) is concentrically under the Radiation source (17.) and is fixed to the Holder of PMT assembly (30.) with a Retaining screw (46.) pressing to the corresponding groove in the Outer cover of PMT (45.) and further tightened with the Tightening screw of PMT assembly (47.) which presses together the halves of the forked end of the Holder of PMT assembly (30.).
The top of the Retainer of light shield (36.) is at 0.9 mm lower level than the lower face of the Body (21.). This forms a very narrow path for scattered radiation. There are two slots 2mm high, 3 mm wide and 10 mm long for air flow to keep the detector head clean from dust.
The paper web runs gliding on the top of the Retainer of the light shield (36.), the paper does not touch the Aperture disk (18.) nor the Body (21.) in normal conditions.
The Retainer of light shield (36.) is fixed to the Outer cover of PMT (45.) with a Tightening ring (39.) and the Lock ring (38.) presses the Light shield (37.) fast to the retainer (36.).
There is a Lead ring (41.) aroud the head of the PMT assembly concentrically under the Radiation source (17.). The Lead ring (41.) gives additional protection and prevents radiation from leaking through the 3 mm wide slot in the Holder of PMT assembly (30.) and there are two holes for air passage corresponding to the slots of the Retainer of light shield (36.).
The scintillator (40.) is pressed between the PMT (43.) and the Lock ring of light shield (37.) and the Dynode chain board (48.) backed with the Bottom support of PMT (49.) is pressed upwards with foamed plastic fill.
The wall of the Outer cover of PMT (45.) is 4.9 mm thick nominal and at the lower end of the cover there is the Base (50.) fixed with the Tightening ring (51.).
The thickness of the Base (50.) is 5 mm nominal and there are two M8 threads and one M3 thread through the wall for Cord bushings (53., 54.) and the Grounding screw (52.).
There is a Lead cover (34.) around the PMT assembly inside the Shield of lead cover (32.) which is fixed with four Fastening screws (33.) to the Holder of PMT assembly (30.). The Lead cover (34.) is 4 mm thick nominal and 108 mm long, the shield (32.) is 1.75 mm thick and 113 mm long.

An Aperture open indicator light has been added; the light is ON whenever the aperture is open (in either ϕ5mm or ϕ15mm position).

The new Basis Weight Sensor BW-2h55 has only two measurement apertures ϕ5mm and ϕ15mm on its Aperture disk (18.). A Torque solenoid (3.) is used to turn the Aperture disk (18.). Whenever the electricity falls off or is turned off, an integrated spiral spring in the Torque solenoid returns the Aperture disk to OFF position; drawing BWOHJ-12-4M. When selecting ϕ5mm aperture a Blocking solenoid (6.) is used to stop the Aperture disk in correct position ;drawing BWOHJ-13-4M. When selecting ϕ15mm aperture the Blocking solenoid is not activated and the Aperture disk turns to ϕ15mm position; drawing BWOHJ-14-4M. The Position sensing switches (23.) measure the angle of rotation of the Positioning disk (11.) fixed to the axle of the Torque solenoid (11.) with a Retaining screw (12.)

All the control signals to the solenoids come from the measurement computer through a multi-conductor cable and there is a small interface board with drivers for the solenoids inside the Body of the sensor. The power of the board comes from the Analyzer itself and the solenoids can be activated only when the power is on in the Analyzer and in the measurement computer.

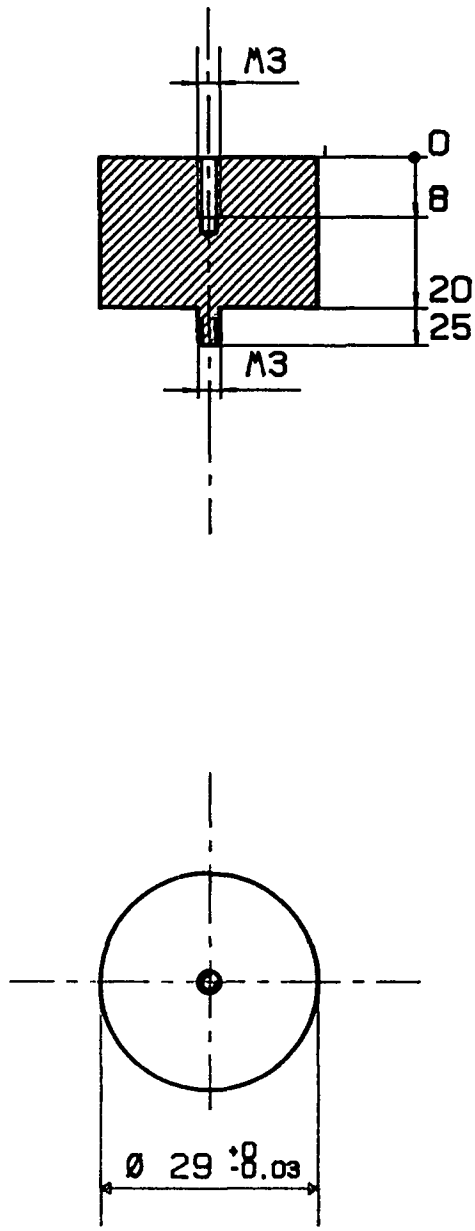

		Aineen St-50	Laatija AOL	Päivämäärä 6.5.-93
	Nimitys SATEILYLAHTEEN PIDIN	Suhde	Liittymä BV-2h55	
TAPIO TECHNOLOGIES	RETAINER OF RADIATION	1:1	Nro 3TBW2-16-4M	
	SOURCE			

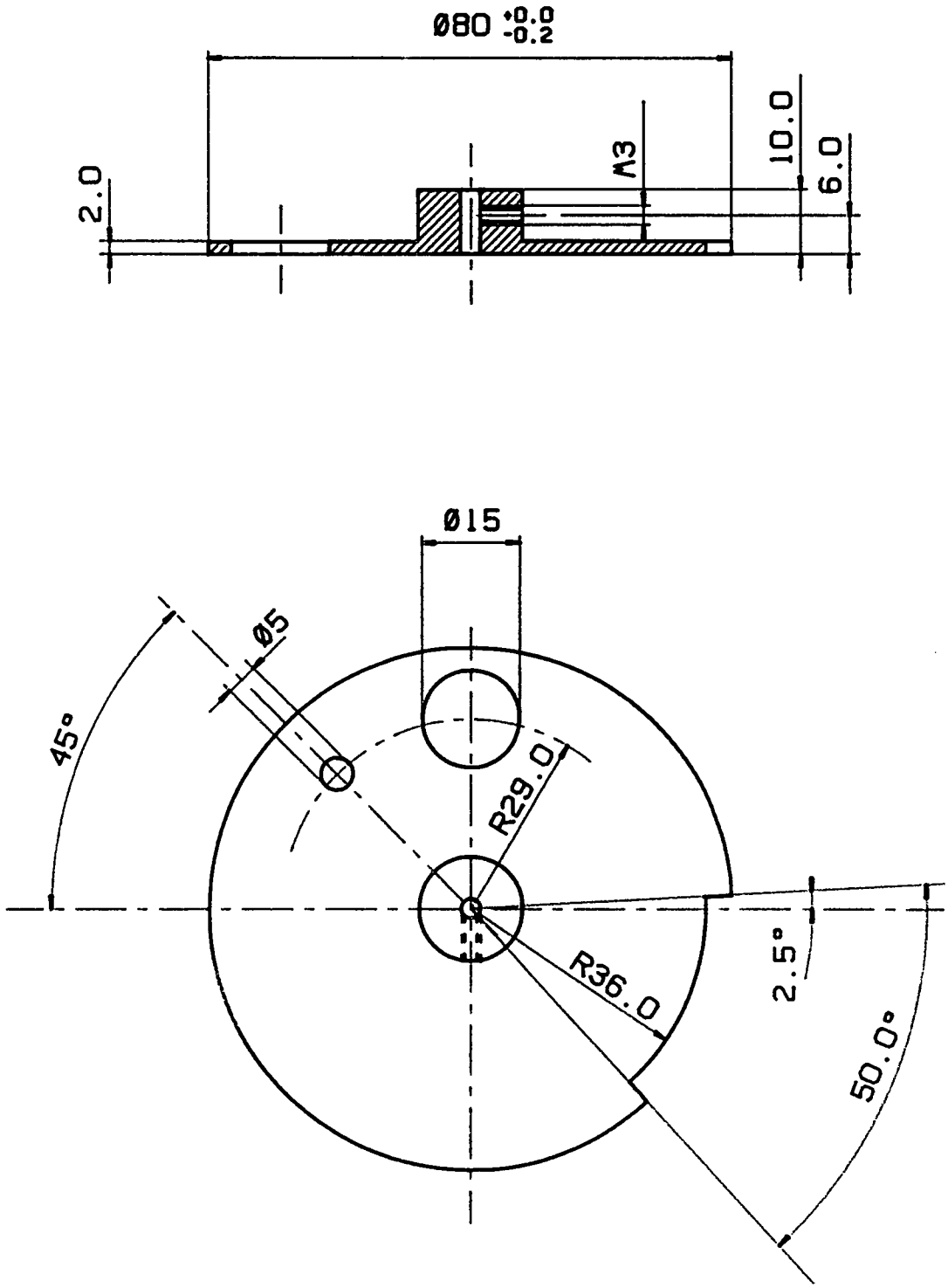

		Aineen A1 ELOKS.AU	Laatija AOL	Päivämäärä 5.5.-93
	Nimitys AUKKOLEVY	Suhde	Liitteen BV-2h55	
TAPIO TECHNOLOGIES	APERTURE DISK	1:1	Nro 3TBW2-04-4M	

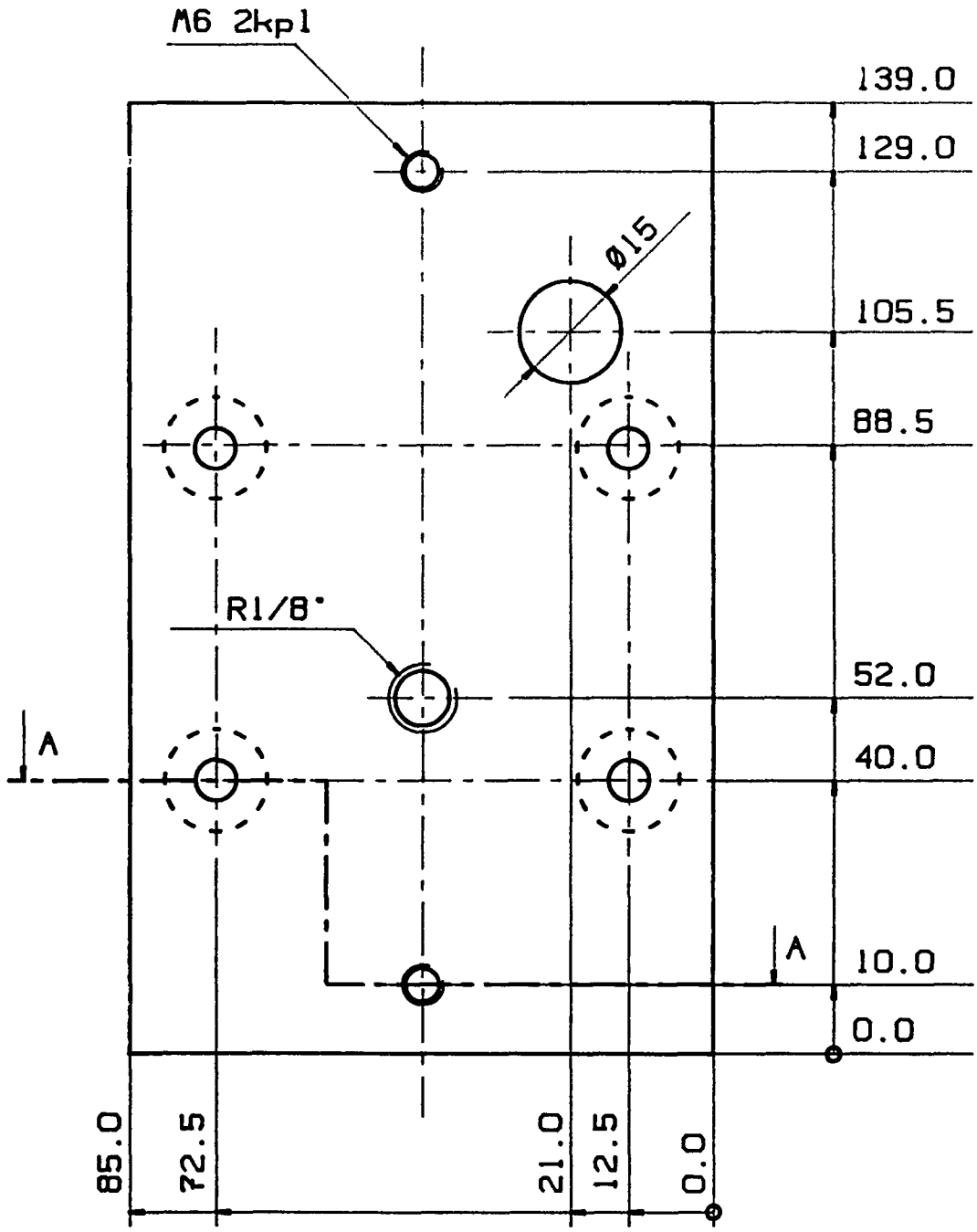

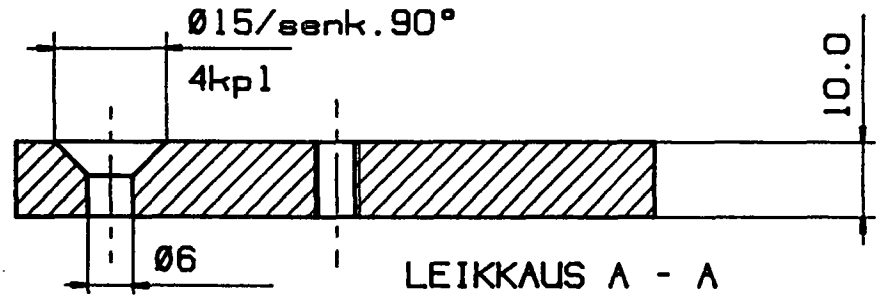

LEIKKAUS A - A

	Aineen: Al-ELOKS.AU	Laatija: AOL	Päivätty: 5.5.-93
	Nimitys: KIINNITYSLEVY	Suhde:	Liitteen: BV-2h55
TAPIO TECHNOLOGIES	MOUNTING FLANGE	1:1	Nro: 3TBW2-03-4M

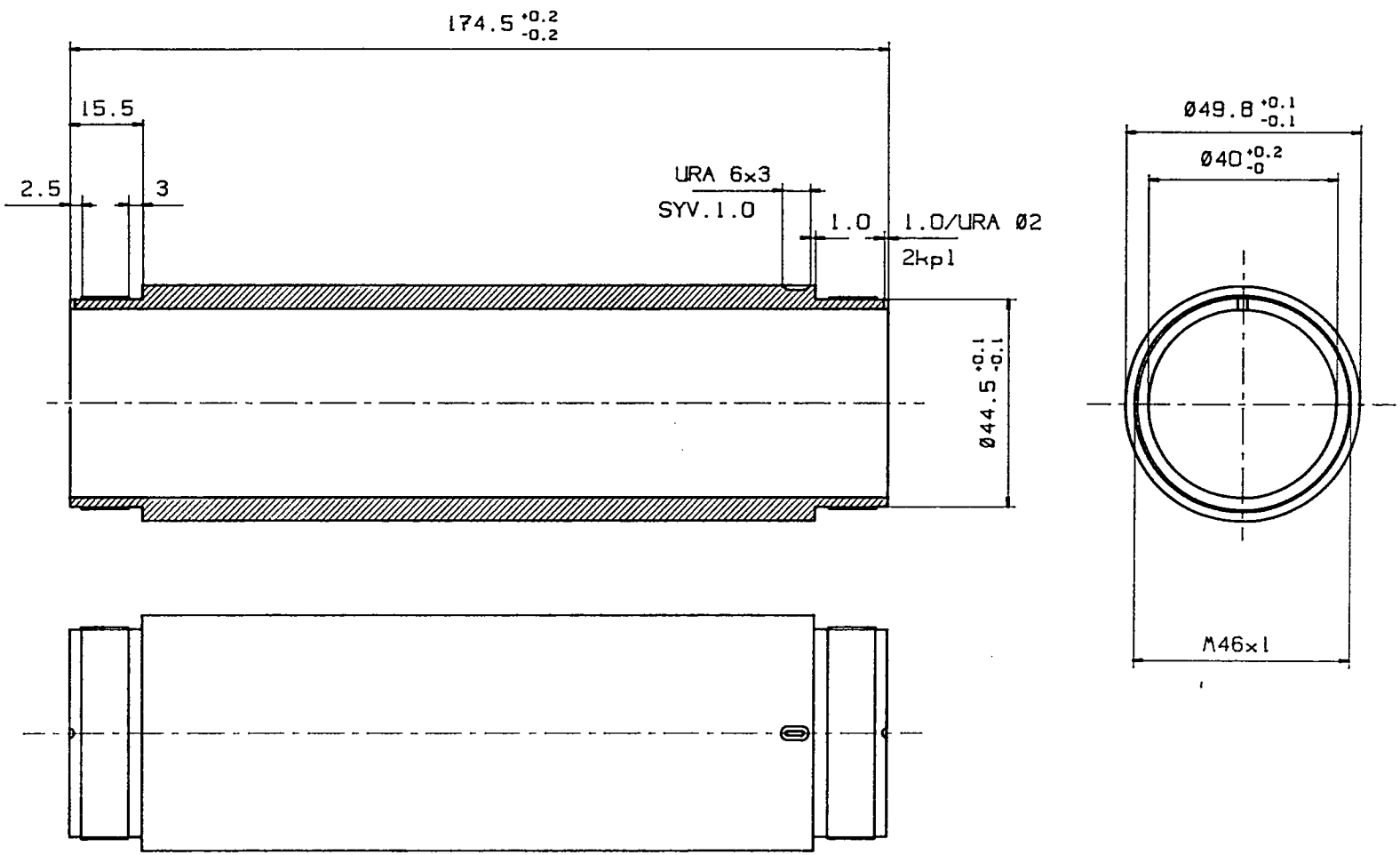

		Aineen: Al-ELOKS.MU	Laatija: MOL	Päivämäärä: 19.5.-93
	Nimitys: KUORI	Suhde: 1:1	Liittymä: BW-2h55	
TAPIO TECHNOLOGIES	OUTER COVER OF PMT		Nro: 3TBW2-10-3M	

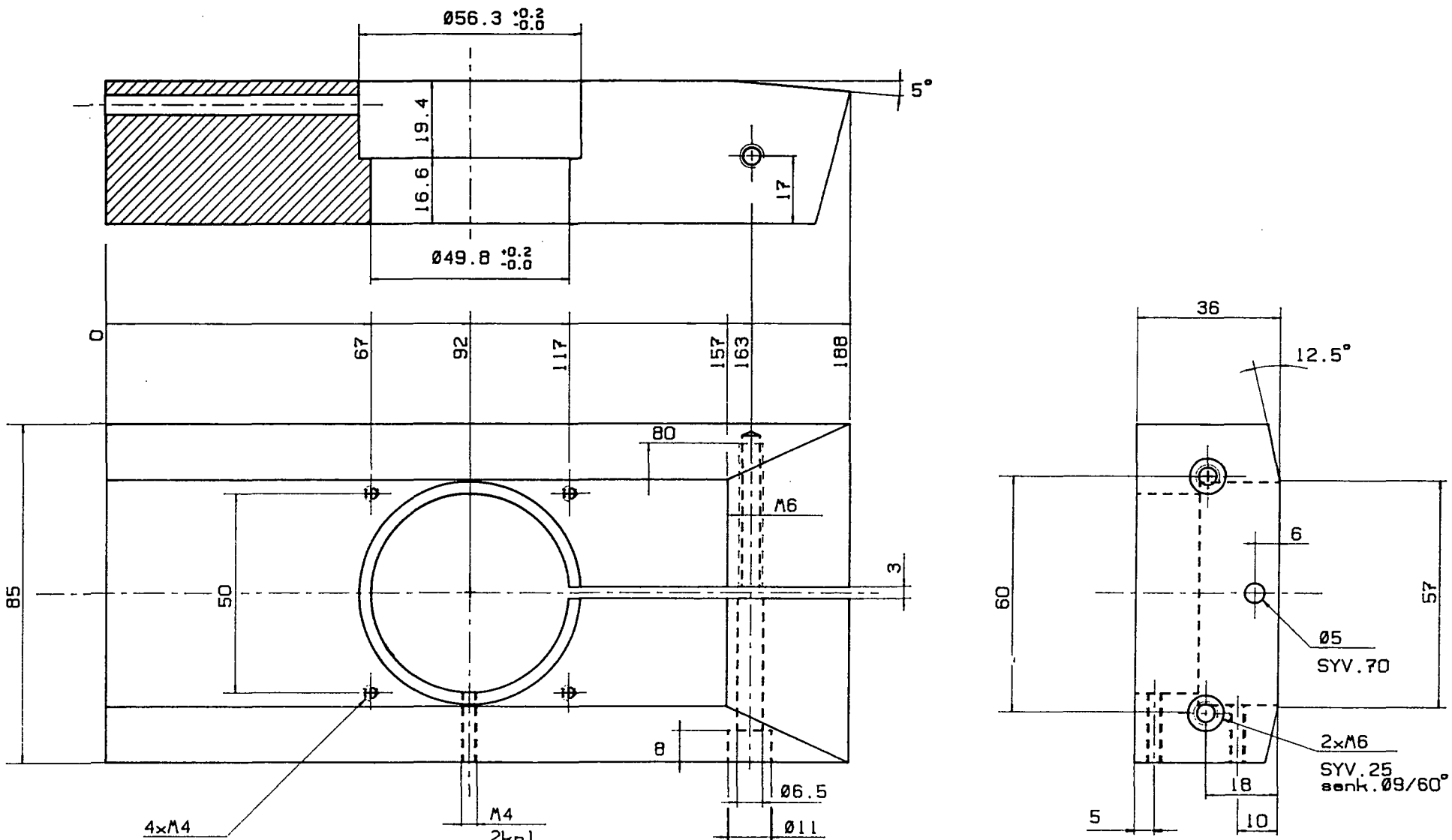

		Aines A1	Laatija AOL	Päivätty 5.5.-93
	Nimitys PMT ASETELMAN PIDIN	Suhde	Liittyy BW-2h55	
TAPIO TECHNOLOGIES	HOLDER OF PMT ASSEMBLY	1:1	Nro 3TBW2-02-3M	

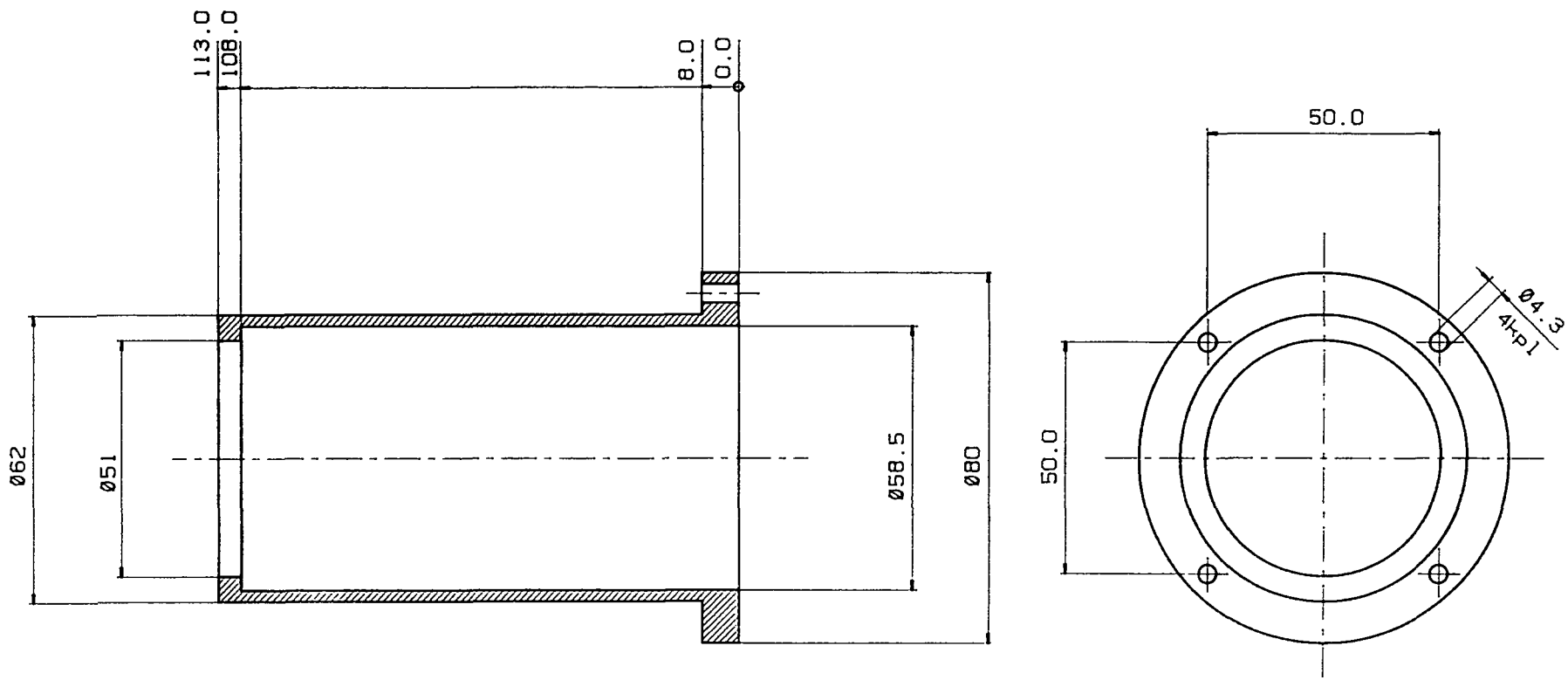

	Aineen: A1-ELOKS.MU	Laatija: MOL	Päivämäärä: 13.5.-93
	Nimitys: LYIJYVAIPAN SUOJAKUORI	Suhde:	Liitteen: BW-2h55
TAPIO TECHNOLOGIES	SHIELD OF LEAD COVER	1:1	Nro: 3TBW2-08-3M

BASIS WEIGHT SENSOR RADIATION TEST REPORT

DISTANCE	DIRECTION A	B	C	D	E	F	G	H	I	J	K
0 cm											
5 cm											
10 cm											
30 cm											

Directions A - K are according radiation measurement charts.
Distances are measured from the surface of the sensor to
the given direction.

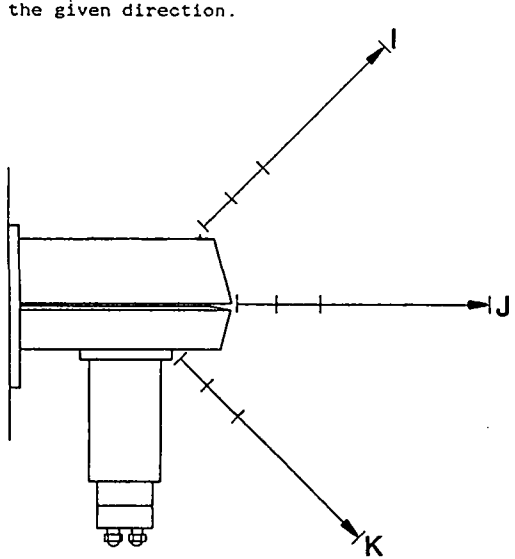

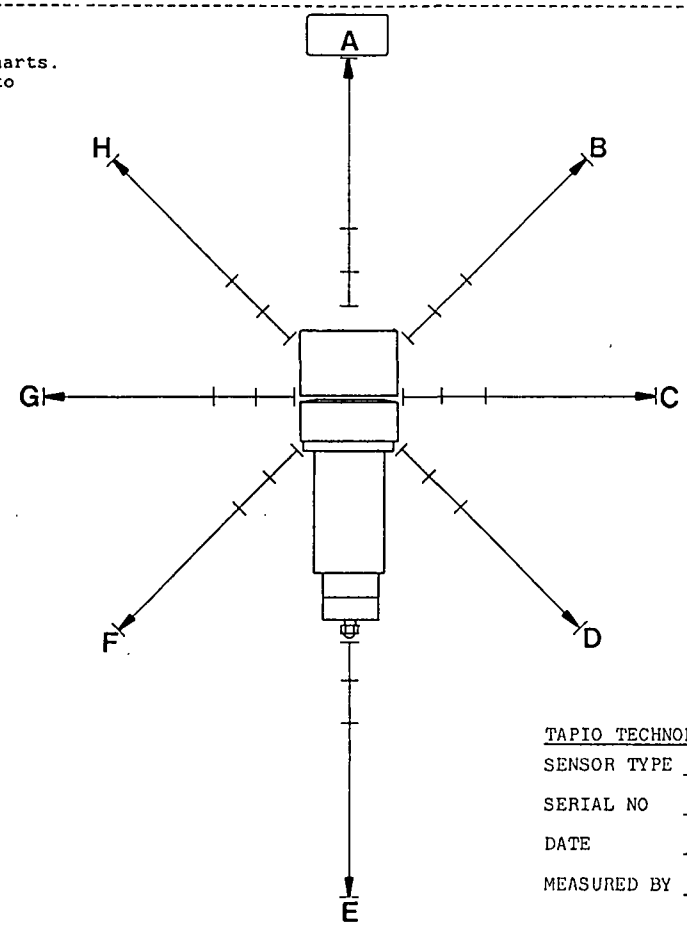

TAPIO TECHNOLOGIES OY

SENSOR TYPE : _____

SERIAL NO : _____

DATE : _____

MEASURED BY : _____

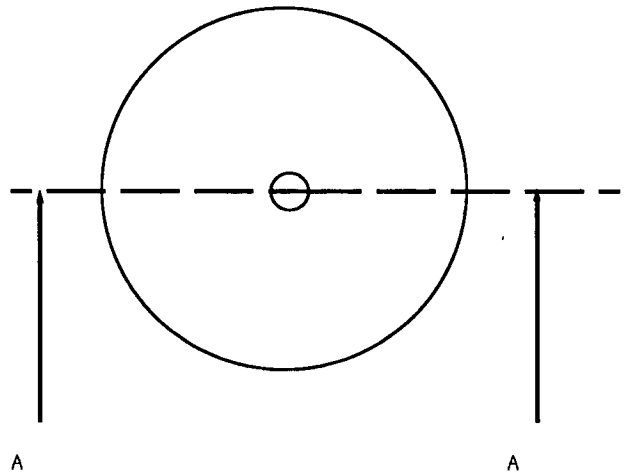

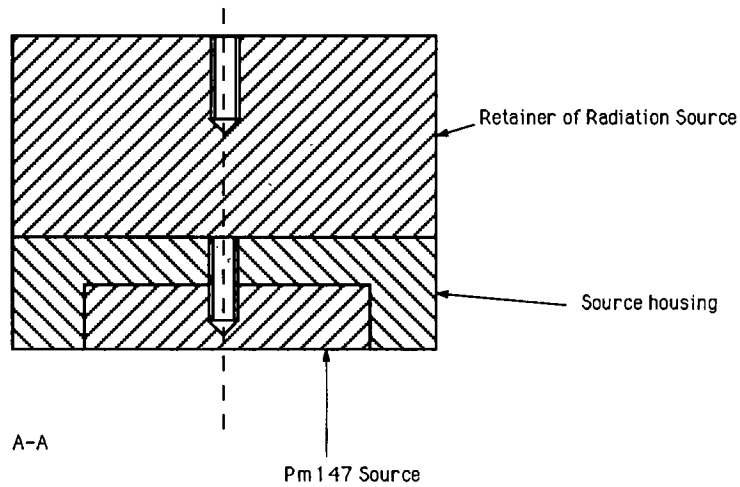

			JPe/27.4.1993
	BW-2h55, source installation to source housing, NON-DIMENSIONAL DRAWING		
TAPIO® Technologies			

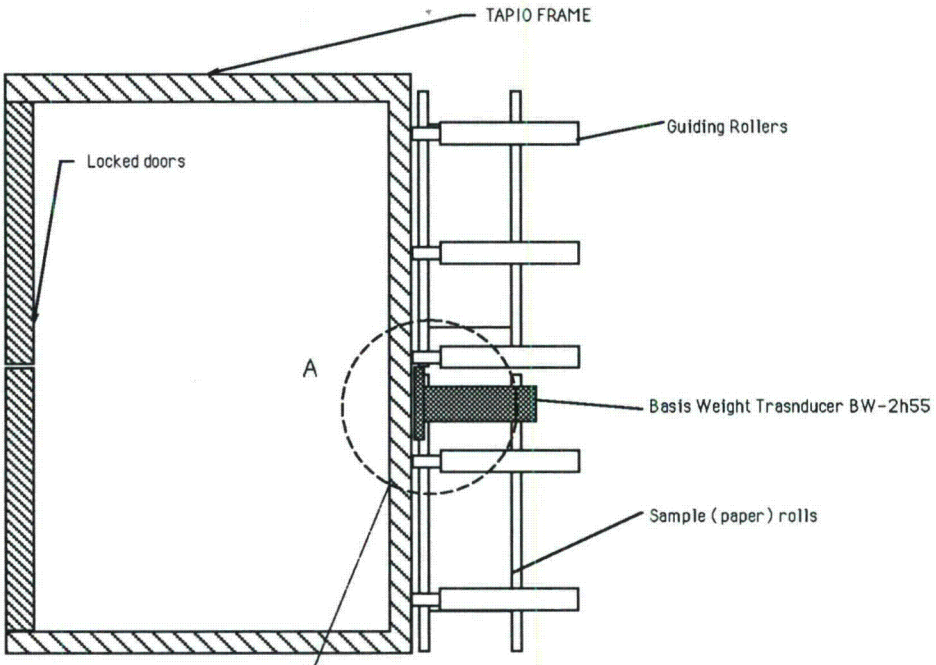

Location A

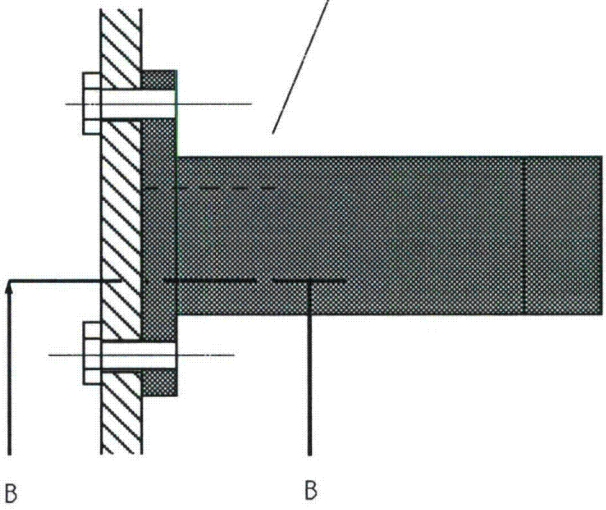

B-B

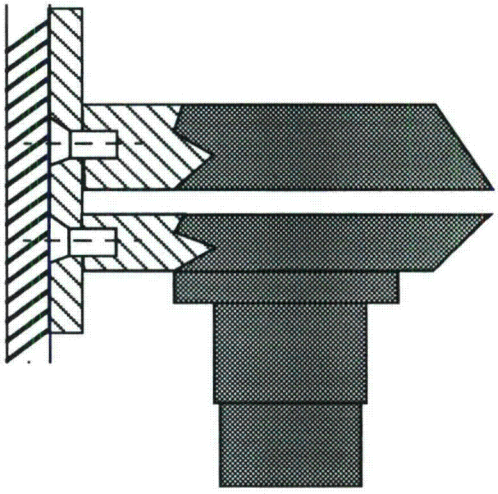

			JPe/27.4.1993
	BW-2h55, Sensor attachment to analyzer body, NON-DIMENSIONAL DRAWING		
TAPIO® Technologies			

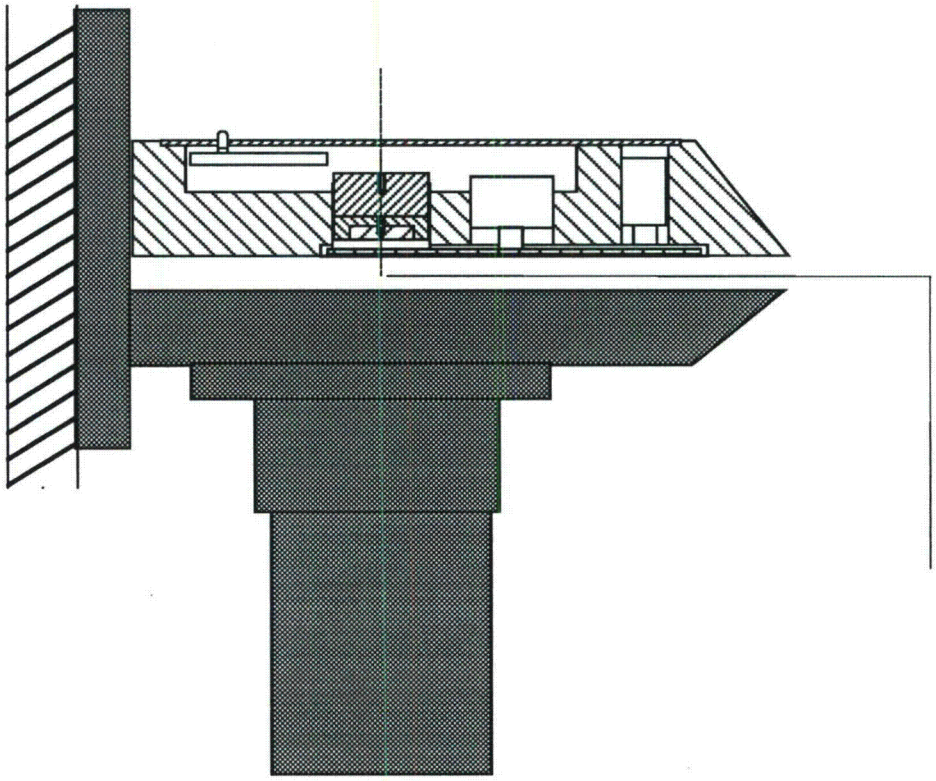

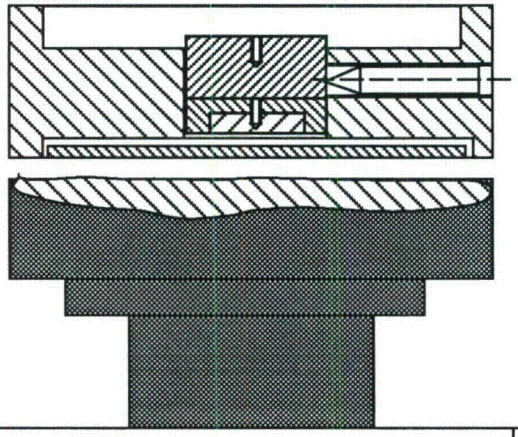

			JPe/28.4.1993
	BW-2h55, Source housing attachment to sensor body, NON-DIMENSIONAL DRAWING /schematic drawing		
TAPIO® Technologies			

3. TORQUE SOLENOID

Maßbilder

Das Federrückstellmoment ist innerhalb des Einstellbereiches durch Wahl der Zahnlücken und durch Drehen des Federgehäuses zu verändern. Weitere technische Daten siehe Seite 2.

Nennspannung ⎓ 24 V, auf Wunsch ist eine Wicklungsanpassung an eine Nennspannung von max. ⎓ 60 V möglich.

Listenwerte

Die in den Tabellen aufgeführten Drehmomente beziehen sich auf 90 % der Nennspannung ⎓ 24 V und den betriebswarmen Zustand. Bei anderen Nennspannungen können Drehmomentabweichungen auftreten. Die Drehmomentwerte können infolge natürlicher Streuung um ca. ± 10 % abweichen.

Dem betriebswarmen Zustand liegen zugrunde:

a) Montage auf wärmeisolierender Unterlage
b) Nennspannung ⎓ 24 V
c) Rel. Einschaltdauer 5 – 100 % entsprechend Teilliste G XX Punkt 4
d) Bezugstemperatur 35° C.

Nähere Erläuterungen siehe ⊕-Technische Erläuterungen bzw. VDE 0580.

Einbauvorschrift

Die Drehmagnete können in beliebiger Einbaulage eingesetzt werden. Es ist im Interesse der Lager-Lebensdauer und Funktion darauf zu achten, daß Schläge und größere Drücke auf die Drehachse in Axialrichtung vermieden werden.

Die Abstützung von angebauten Massen bei vertikalem Einbau soll außerhalb des Magneten erfolgen. Außerdem ist es ratsam, größere, mit der Welle verbundene Massen nicht mit den Anschlägen innerhalb des Magneten, sondern außerhalb abzufangen.

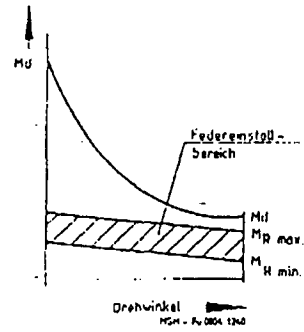

Bild 3
Drehmoment- und Rückstellmomentlinie und Rückstellfederkennlinie

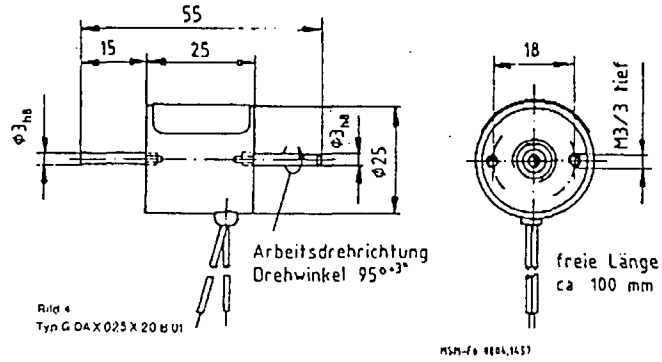

Bild 4
Typ G DA X 025 X 20 B 01

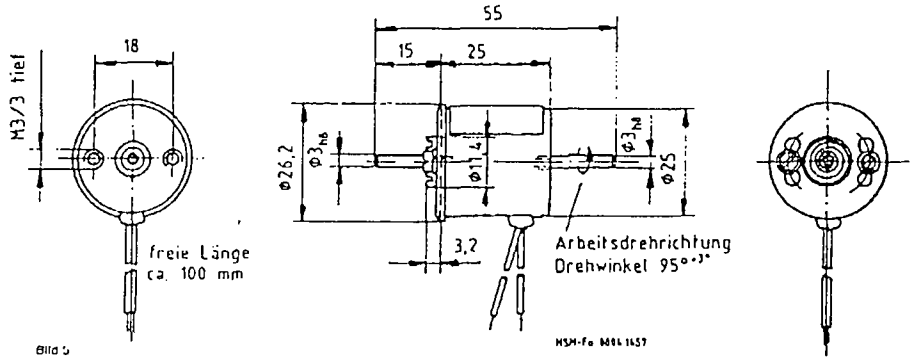

Bild 5
Typ G DA X 025 X 20 B 21
(mit Rückstellfeder)

3. TORQUE SOLENOID

Technische Daten

Typ		G DA X 025 X 20 B 01				
Drehwinkel	(°)	95^{+3}				
Rel. Einschaltdauer ED	(%)	100	40	25	15	5
Drehmoment Md (Ncm) bei ∢	0°	0,63	0,95	1,05	1,15	1,10
	30°	0,22	0,50	0,70	0,85	1,15
	60°	0,10	0,25	0,40	0,55	0,85
	95°	0,085	0,17	0,27	0,40	0,80
Massenträgheitsmoment	(kgm^2)	$1{,}02 \cdot 10^{-7}$				
Nennleistung P_{20}	(W)	4,2	10,9	16,6	24,3	57,6
Zeitkonstante τ	(ms)	6				
Magnetgewicht m_M	(kg)	0,070				

Typ		G DA Y 025 X 20 B 0				
Drehwinkel	(°)	65^{+3}				
Rel. Einschaltdauer ED	(%)	100	40	25	15	5
Drehmoment Md (Ncm) bei ∢	0°	0,98	1,5	1,65	1,80	1,8
	20°	0,46	1,0	1,30	1,55	1,8
	40°	0,25	0,8	0,85	1,15	1,6
	65°	0,16	0,4	0,60	0,85	1,5
Massenträgheitsmoment	(kgm^2)	$1{,}15 \cdot 10^{-7}$				
Nennleistung P_{20}	(W)	4,2	10,9	16,6	24,3	57,
Zeitkonstante τ	(ms)	9				
Magnetgewicht m_M	(kg)	0,070				

Typ		G DA Y 025 X 20 B 02				
Drehwinkel	(°)	45^{+3}				
Rel. Einschaltdauer ED	(%)	100	40	25	15	5
Drehmoment Md (Ncm) bei ∢	0°	0,96	1,60	1,85	2,00	2,15
	15°	0,58	1,15	1,50	1,80	2,15
	30°	0,41	0,95	1,35	1,70	2,35
	45°	0,27	0,65	0,95	1,30	2,10
Massenträgheitsmoment	(kgm^2)	$1{,}27 \cdot 10^{-7}$				
Nennleistung P_{20}	(W)	4,2	10,9	16,6	24,3	57,6
Zeitkonstante τ	(ms)	9				
Magnetgewicht m_M	(kg)	0,070				

Typ		G DA Y 025 X 20 B 0				
Drehwinkel	(°)	35^{+3}				
Rel. Einschaltdauer ED	(%)	100	40	25	15	5
Drehmoment Md (Ncm) bei ∢	0°	1,05	1,60	1,90	2,00	2,
	10°	0,84	1,55	1,90	2,15	2,
	20°	0,66	1,35	1,80	2,20	2,
	35°	0,38	0,90	1,30	1,70	2,
Massenträgheitsmoment	(kgm^2)	$1{,}40 \cdot 10^{-7}$				
Nennleistung P_{20}	(W)	4,2	10,9	16,6	24,3	57,
Zeitkonstante τ	(ms)	9				
Magnetgewicht m_M	(kg)	0,070				

Typ		G DA Y 025 X 20 B 04				
Drehwinkel	(°)	25^{+3}				
Rel. Einschaltdauer ED	(%)	100	40	25	15	5
Drehmoment Md (Ncm) bei ∢	0°	1,00	1,75	2,00	2,30	2,60
	5°	0,97	1,70	2,10	2,40	2,80
	15°	0,73	1,50	1,95	2,35	3,10
	25°	0,50	1,15	1,60	2,00	2,90
Massenträgheitsmoment	(kgm^2)	$1{,}53 \cdot 10^{-7}$				
Nennleistung P_{20}	(W)	4,2	10,9	16,6	24,3	57,6
Zeitkonstante τ	(ms)	9				
Magnetgewicht m_M	(kg)	0,070				

Umrechnungs-Faktor
1 N ≈ 0,102 kp ≈ 0,1 kp
1 Ncm ≈ 0,103 kpcm ≈ 0,1 kpcm

Technische Daten mit Rückstellfeder

Typ	rechtsdrehend / linksdrehend	G DA X 025 X 20 B 21 / G DA X 025 X 20 B 25					G DA Y 025 X 20 B 21 / G DA Y 025 X 20 B 25					G DA Y 025 X 20 B 2 / G DA Y 025 X 20 B 2				
Drehwinkel	(°)	95^{+3}					65^{+3}					45^{+3}				
Rel. Einschaltdauer ED	(%)	100	40	25	15	5	100	40	25	15	5	100	40	25	15	5
Federrückstell-moment M_R (Ncm)	min.	–	0,1	0,1	0,1	0,1	0,1	0,1	0,1	0,1	0,1	0,1	0,1	0,1	0,1	0,
	max.	–	0,1	0,2	0,3	0,5	0,1	0,3	0,4	0,6	0,6	0,2	0,5	0,6	0,6	0,
Federkonstante	(Ncm/°)	0,00206					0,00206					0,00206				

Typ	rechtsdrehend / linksdrehend	G DA Y 025 X 20 B 23 / G DA Y 025 X 20 B 27					G DA Y 025 X 20 B 24 / G DA Y 025 X 20 B 28				
Drehwinkel	(°)	35^{+3}					25^{+3}				
Rel. Einschaltdauer ED	(%)	100	40	25	15	5	100	40	25	15	5
Federrückstell-moment M_R (Ncm)	min.	0,1	0,1	0,1	0,1	0,1	0,1	0,1	0,1	0,1	0,1
	max.	0,3	0,6	0,6	0,6	0,6	0,4	0,6	0,6	0,6	0,6
Federkonstante	(Ncm/°)	0,00206					0,00206				

M_d = Drehmoment (siehe Tabelle)

M_R min. / M_R max. } Federeinstellmoment im stromlosen Zustand.

Durch die Herausgabe dieser Liste werden alle früheren Einzellisten, besonders bezüglich der Leistungsangaben, ungültig

TASAVIRTA-LIIKEMAGNEETIT

GMR-TASAVIRTA-LIIKEMAGNEETIT

GMR-tasavirta-liikemagneetit ovat korroosiosuojattuja, luotettavasti toimivia liikemagneetteja. Ankkuri ja työntötanko ovat huoltovapaissa teflon-johteissa. GMR-magneetin kestoikä on yli 50 milj. toimintakertaa. Liike on yksisuuntainen veto- tai työntöliike. Kaksisuuntainen liike saadaan aikaan vastajousen avulla. GMR-tasavirta-liikemagneetti ei ylikuumene vaikka liikkeen loppuunmeneminen estettäisiinkin. GMR-liikemagneetti voidaan kiinnittää kolmella eri kiinnitystavalla, joita kaikkia voidaan käyttää sekä vedolle että työnnölle. Varastomallina meillä on kiinnitysvaihtoehto 1. Muut kiinnitysvaihtoehdot tehdastilauksena.

KIINNITYSVAIHTOEHDOT

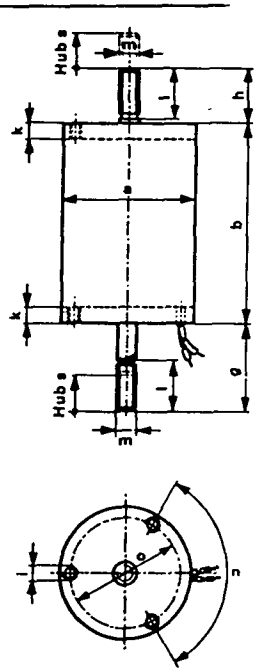

Vaihtoehto 1

Liitäntäjohdot: pit. 100 mm

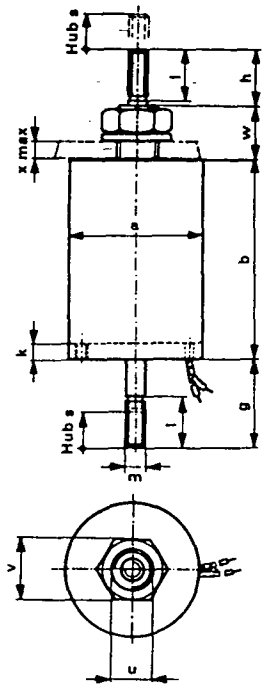

Vaihtoehto 2

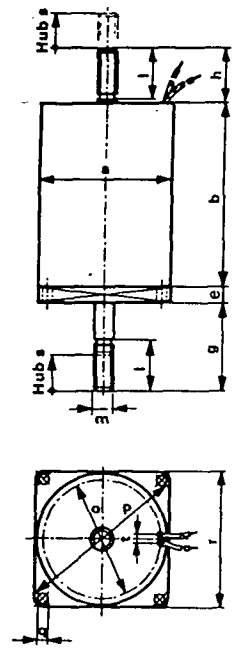

Vaihtoehto 3

Mittataulukko Mitat mm

Typ	aø	b	e	g	h	i	k	l	m	±20' n	±0,2 oø	±0,2 pø	H 12 qø	r	s	t	u	v	w	x
GMR 020	20	30	3,0	17	14	M 2,5	1,5	10	M 3	120°	15	28	2,9	25	4	6	M 8×1	13	10	4
GMR 030	30	45	3,0	22	16	M 3	2,5	12	M 4	120°	24	40	3,3	35	6	6	M 10×1	17	12	5
GMR 040	40	60	3,0	26	18	M 3	4	14	M 6	120°	30	48	3,3	40	8	6	M 12×1	19	14	6
GMR 050	50	75	4,0	29	19	M 4	5	14	M 6	120°	36	60	4,4	50	10	6	M 16×1,5	24	18	8
GMR 060	60	90	4,0	34	19	M 4	6	14	M 6	120°	45	72	4,4	60	15	6	M 16×1,5	24	20	10
GMR 070	70	105	5,0	46	26	M 5	7	20	M 8	120°	56	82	6,6	70	20	6	M 20×1,5	30	24	13

TEKNISET TIEDOT

Tyyppi		GMR 020	GMR 030	GMR 040	GMR 050	GMR 060	GMR 070
ED %	%	100					
Isku	mm	4	6	8	10	15	20
Pitovoima	kp	0,25	1,16	2,45	7,9	13,6	19,2
Magneettivoima	kp	0,13	0,38	0,9	2,0	2,9	3,7
Nimellisteho	W	4,0	6,6	10,5	17	24	28
Vetoaika	ms	55	95	160	170	195	220
Päästöaika	ms	45	45	60	60	80	100
Liikeaika min.	s	0,10	0,14	0,22	0,23	0,27	0,32
Liikeaika max.	s	Ei rajoitusta					
Ankkurin massa	g	8	32	73	120	185	320
Kokonaismassa	g	55	190	450	920	1610	2550
Suojausluokka		Sähköinen IP 65		Mekaaninen IP 00			

GMR-tasavirta-liikemagneetteja valmistetaan myös 40, 25, 15 ja 5 %:n ED-arvoille, jolloin voimat ja tehot kasvavat sekä vetoajat pienenevät. GMR-magneetteja voidaan myös kuormittaa suuremmalla jännitteellä, jolloin sen ED-arvo pienenee. Tarkempia tietoja ED-arvoista saatte kysymällä.

Magneettivoima on mitattu 90 % nimellisjännitteellä käämilämpötilan ollessa 115 °C.

Päästöaika on keskimääräinen päästöaika, joka on mitattu nimellisjännitteellä ja nimellisiskunpituudella kuormituksen ollessa 70 % nimellisestä.

JÄNNITEVAIHTOEHDOT (Eristysluokka E)

Merkintä	0	1	2	3	4	5
Jännite	12 V	24 V	48 V	110 V	180 V	220 V

Varastokoko meillä on 24 V, 100 % ED. Muut vaihtoehdot tehdastilauksena.

HUOM ! Suurina sarjoina on mahdollista tilata tehtaalta mitoiltaan ja teknisiltä arvoiltaan poikkeavia rakenteita.

TILAUSESIMERKKI

GMR 040-1A1

Tyyppi
Koko
Jännitevaihtoehto (24V)
ED % (100%ED)
Kiinnitysvaihtoehto (1)

OTA YHTEYS
MULTIELEKTRO OY
TAKKATIE 10 • 00370 HELSINKI 37
PUHELIN (90) 55 77 27•TELEX 123297

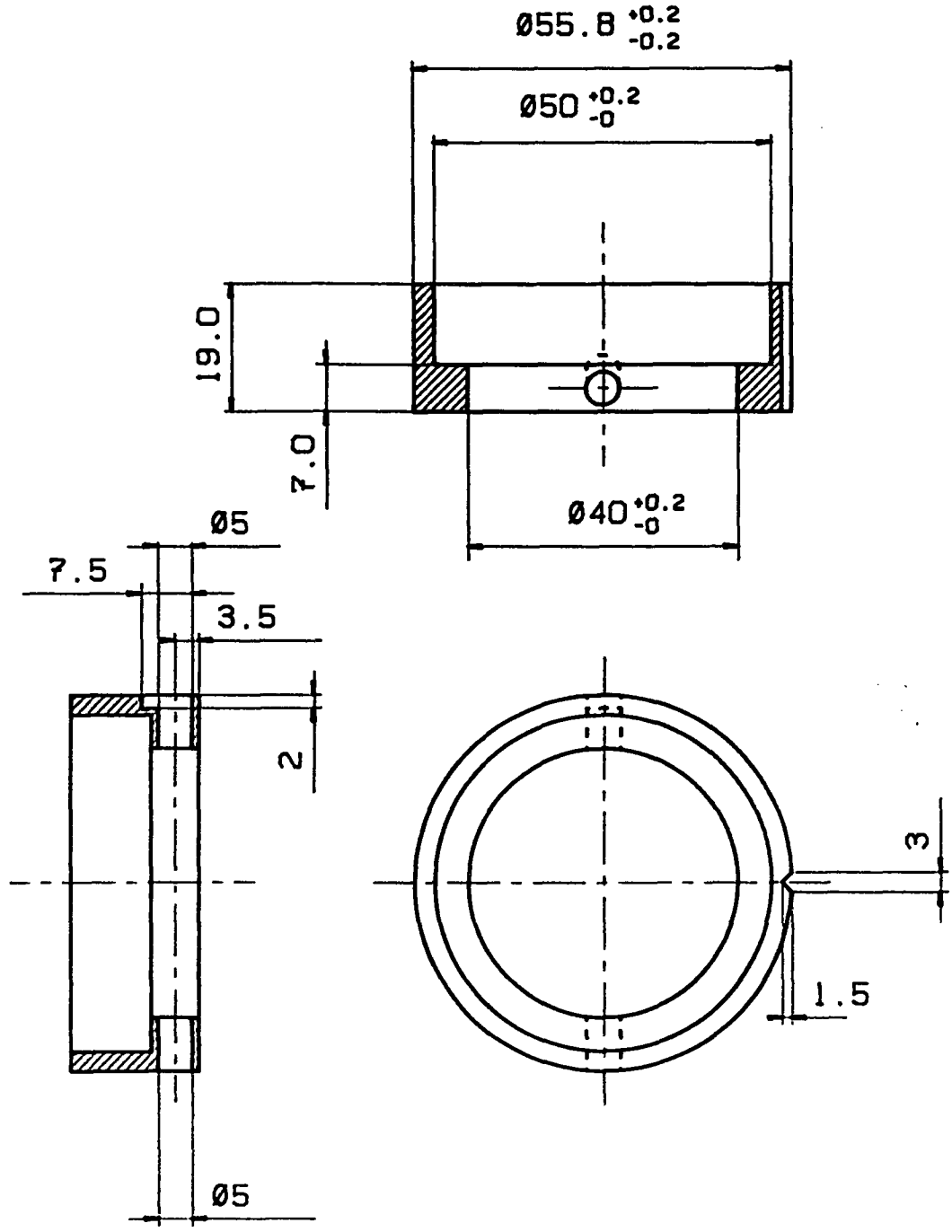

		Aineen Pb	Laatija AOL	Päivämäärä 14.5.-93
	Nimitys LYIJYRENGAS	Suhde	Liitteen BV-2h55	
TAPIO TECHNOLOGIES	LEAD RING	1:1	Nro 3TBW2-09-4A	

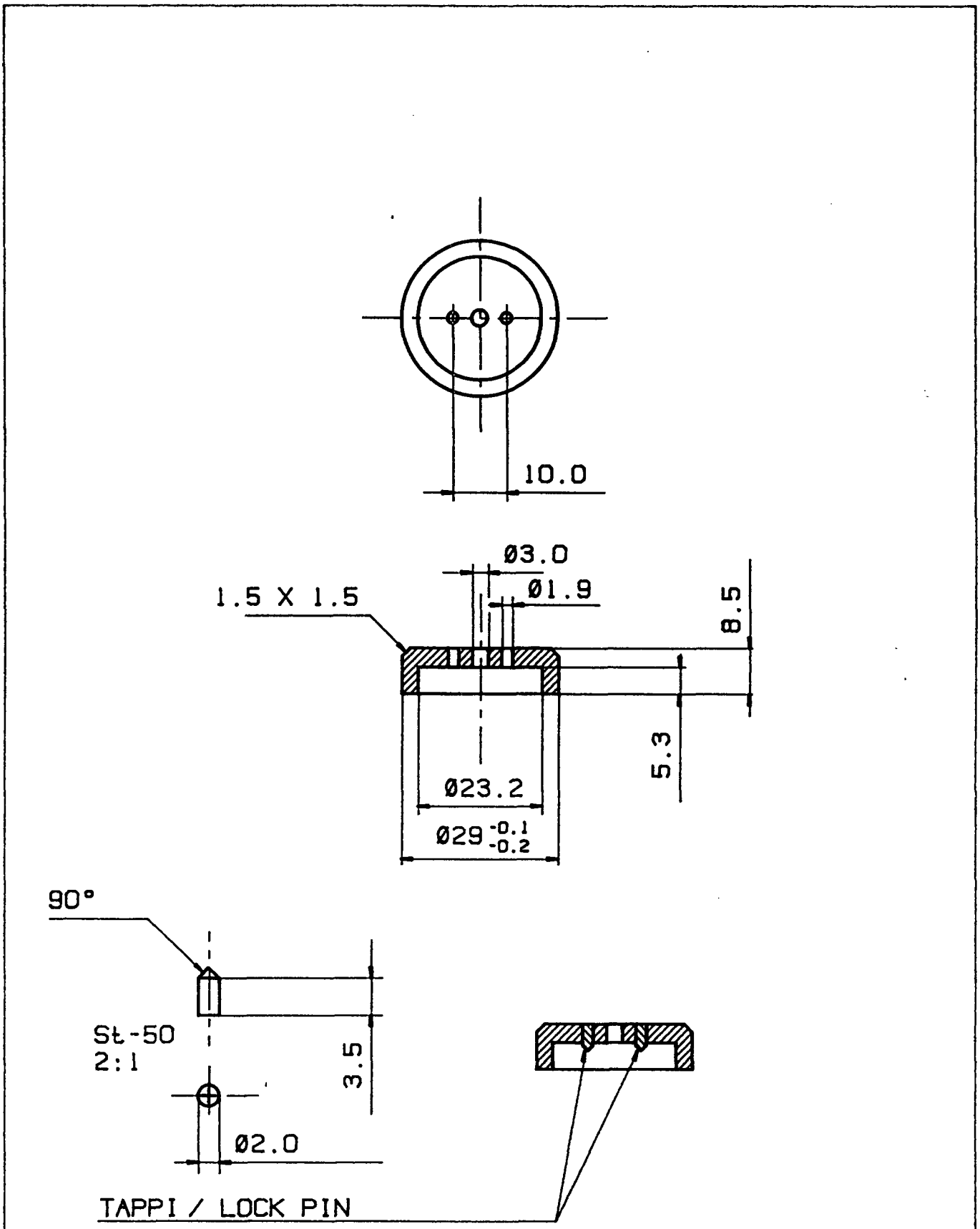

	Aineen Pb	Laatija AOL	Päiväys 12.5.-93
	Nimitys LYIJYPESA	Suhde	Liitteen BV-2h55
TAPIO TECHNOLOGIES	LEAD HOUSING		Nro 3TBW2-06-4M

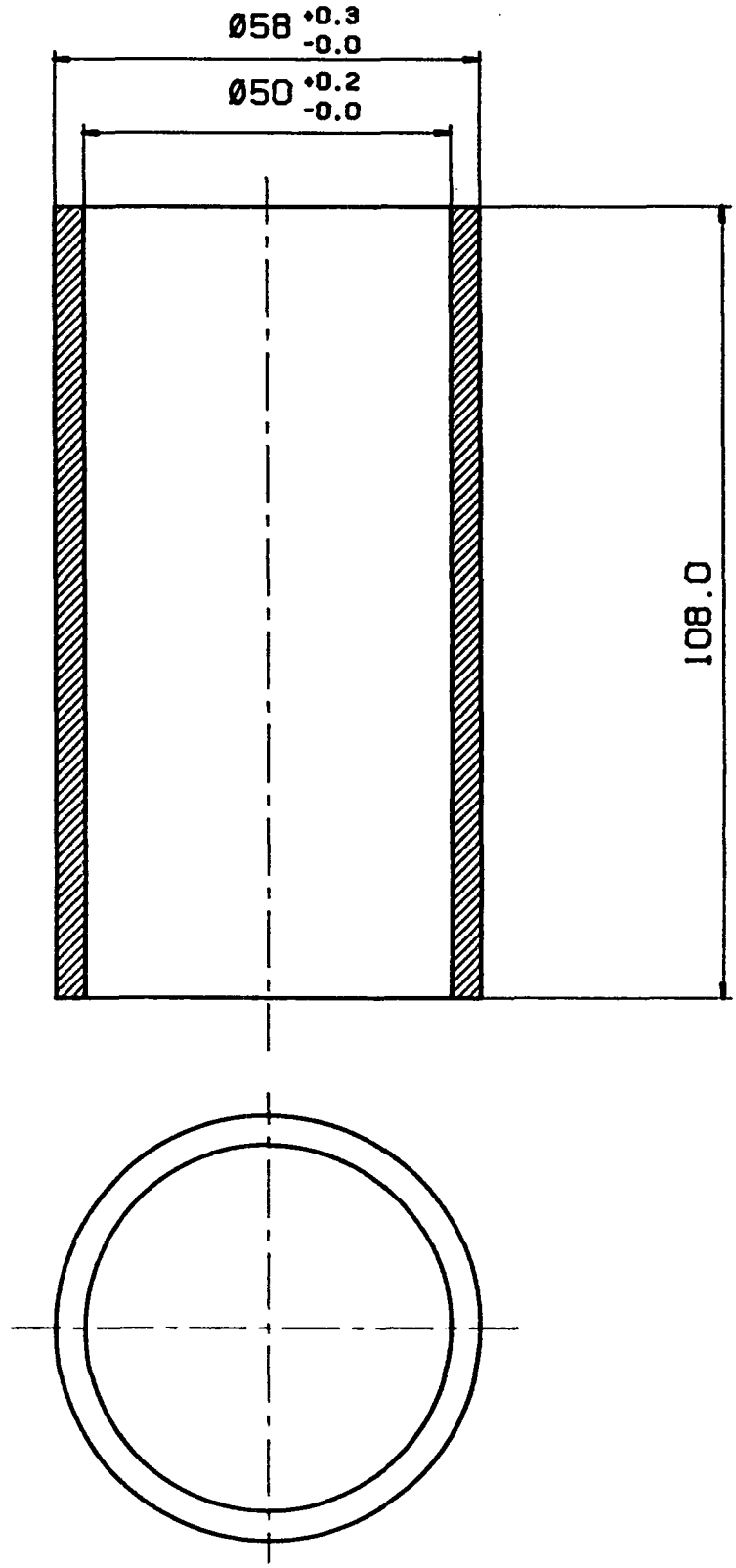

		Aineen Pb	Laatija AOL	Päivämäärä 12.5.-93
	Nimitys LYIJYVAIPPA	Suhde	Liitteen BV-2h55	
TAPIO TECHNOLOGIES	LEAD COVER	1:1	Nro 3TBW2-07-4M	

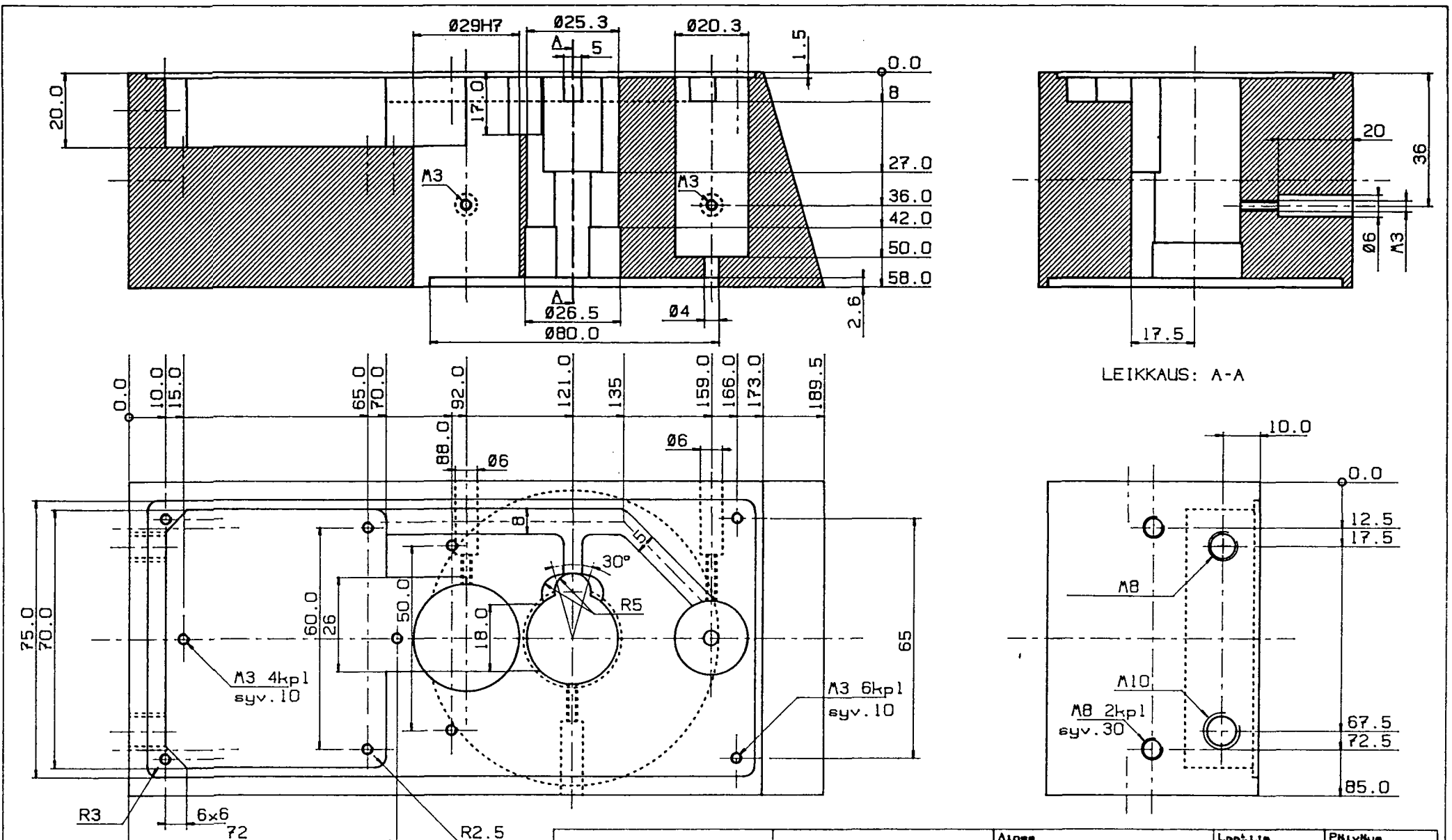
Ø29H7
Ø25.3
Ø20.3
A
5
1.5
0.0
8
27.0
36.0
42.0
50.0
58.0
20.0
17.0
M3
M3
A
Ø26.5
Ø80.0
Ø4
2.6
20
36
Ø6
M3
17.5
LEIKKAUS: A-A
0.0
10.0
15.0
65.0
70.0
92.0
121.0
135
159.0
166.0
173.0
189.5
88.0
Ø6
Ø6
8
30°
R5
75.0
70.0
60.0
26
50.0
18.0
65
M3 4kpl
syv.10
M3 6kpl
syv.10
R3
6x6
72
R2.5
10.0
0.0
12.5
17.5
M8
M10
M8 2kpl
syv.30
67.5
72.5
85.0
Aines
A1 ELOKS.AU
Laatija
AOL
Päivätyn
8.1.-93
Nimitys
NELIOMASSA-ANTURI BV-2h55
Suhde
1:1
Liittyy
BV-2h55
TAPIO
TECHNOLOGIES
RUNKO
Nro
3TBV2-01-3M

TAPIO TECHNOLOGIES OY
4.5.-93 MOL

BW-2h55, PARTS LIST

	PART	MATERIAL/SPECIFICATION
1.	TOP COVER PLATE	Al
2.	FASTENING SCREW OF 1.	St
3.	TORQUE SOLENOID	St, Cu /GDAX025X20B25
4.	RETAINING SCREW OF 3.	St
5.	CAP OF 4.	PVC
6.	BLOCKING SOLENOID	St, Cu /GMR020
7.	RETAINING SCREW OF 6.	St
8.	RELEASING SPRING OF 6.	St
9.	ADJUSTMENT NUTS OF 6.	St
10.	CAP OF 7.	PVC
11.	POSITIONING DISK	Al
12.	RETAINING SCREW OF 11.	St
13.	RETAINER OF RADIATION SOURCE	St-50
14.	RETAINING SCREW OF 13.	St
15.	CAP OF 14.	St
16.	LEAD HOUSING	Pb
17.	RADIATION SOURCE	/PHC.80952
18.	APERTURE DISK	Al
19.	RETAINING SCREW OF 18.	St
20.	MOUNTING FLANGE	Al
21.	BODY	Al
22.	FASTENING SCREW OF 21.	St
23.	POSITION SENSING SWITCHES	Plastic
24.	SET SCREW OF 23.	St
25.	INTERFACE BOARD	LAMINATED GLASS EPOXY
26.	FASTENING SCREW OF 25.	St
27.	SPACER OF 25.	Plastic
28.	CORD BUSHING	St
29.	CORD BUSHING	St
30.	HOLDER OF PMT ASSEMBLY	Al
31.	FASTENING SCREW OF 30.	St
32.	SHIELD OF LEAD COVER	Al
33.	FASTENING SCREW OF 32.	St
34.	LEAD COVER	Pb
35.	OUTER COVER OF PMT	Al
36.	RETAINER OF LIGHT SHIELD	Al
37.	LIGHT SHIELD	Al
38.	LOCK RING OF 37.	Al
39.	TIGHTENING RING OF 36.	Al
40.	SCINTILLATOR	Plastic
41.	LEAD RING	Pb
42.	RETAINING SCREW OF 41.	St
43.	PHOTOMULTIPLIER TUBE (PMT)	/R292-Hamamatsu
44.	SUPPORT RING OF PMT	PVC
45.	OUTER COVER OF PMT	Al
46.	RETAINING SCREW OF PMT ASSY	St
47.	TIGHTENING SCREW OF PMT ASSY	St
48.	DYNODE CHAIN BOARD	LAMINATED GLASS EPOXY
49.	BOTTOM SUPPORT OF PMT	PVC
50.	BASE	Al
51.	TIGHTENING RING OF 50.	Al
52.	GROUNDING SCREW	St
53.	CORD BUSHING	St
54.	CORD BUSHING	St
55.	RETAINER OF POSITION SENSOR	Al
56.	FASTENING SCREW OF 55.	St

Al = 97.4 % Al, 1.1 % Si, 0.9 % Mg, 0.6 % Mn
Pb = 99.9 % Pb

PART OF QUESTION 10

U.S NUCLEAR REGULATORY COMISSION
Rule 391-3-17-.02(11)(d) label concerning the
BASIS WEIGHT SENSOR OF TAPIO ANALYZER

INSTALLATION, OPERATION AND SERVICE

It is STRICTLY FORBIDDEN to open the Basis Weight Sensor. The sensor is installed and serviced only by authorized individuals with legal licenses.

The operation of the analyzer is allowed only for personel having succesfully fullfilled the operator's training given by an organization with legal authorization on behalf of the manufacturer. An official diary of each operation of the device (with other pertinent information) is to be kept by the operators.

The instructions to operate the Analyzer are described in the Operator's Manual with special reference to the basis weight sensor in chapters headed: Description, Basis Weight Sensor BW-2h55; Calibration, Basis Weight; And Radioactive radiation protection.

BETA- RADIATION SOURCE, TESTS ON ITS SAFE USE

The isotope used for ß-radiation is a sealed and solid Promethium-147 (Pm-147) capsule manufactured by Amersham Int. plc. (PHC.C1, capsule x.8095) with nominal activity of 200 mCi (milli Curie). The measured activity on the Day:_____ of Month:_____, 19___ was:_____mCi. The manufacture's certificate on the activity is included in the delivery documents of the analyzer.

The basis weight sensor is required to be tested for possible leaks and for the function of the on/off shutter mechanism once per every six months.

Periodically, each 4-7 years, the ß-source has to be replaced with the new one. The old source has to be sent back to the manufacturer of the Analyzer.

The RECEIPT, POSESSION, USE, and TRANSFER of this device,

? with BW-2h55 sensor

Model PVA-113 Serial No. _____, is subject to a general license or the equivalent, and the regulations of the U.S Nuclear Regulatory Commission or a state with which the Nuclear Regulatory Commission has entered into an agreement for the exercise of regulatory authority. This label shall be maintained on the device in a legible condition. Removal of this label is prohibited.

CAUTION - RADIO ACTIVE MATERIAL

_____

(NAME OF MANUFACTURER OR DISTRIBUTOR)

QUESTION 13

STATEMENT **Apr 29,1993**

I assure that the maintenance of the basis weight sensor BW-2h55 will be taken care by trained and qualified personel of TAPIO Technologies or TAPIO's representative. Customer will be told during the training what they may do and what not eg. "All the maintenance required for basis weight sensor will be taken care by Tapio Technologies"

Tapio Makkonen
President
Tapio Technologies

QUESTION 15

RADIATION PROTECTION

General

The TAPIO-basis weight sensor contains a radioactive radiation source that emits ß- (beta-) radiation. The radioactive material is a commercial product containing Promethium-147 (Pm-147) manufactured by Amersham Int. plc. (Bucks HP7 9NA, U.K.). The source is a sealed one and usually mailed by air. The aperture of the sensor is automatically closed by the shutter in case the electric current is turned off. The size of the aperture is selected through computer control.

• Maintenance

Any maintenance procedure that requires even partial disassemblance of the sensor or opening of any of the covers is subject to prior approval of TAPIO Technologies, Inc. The maintenance has to be performed according to the procedures provided by TAPIO Technologies, Inc. or otherwise the warranty is dissolved. **The Basis Weight Sensor is not allowed to be opened under any circumstances.**

• Replacement and disposal of the radiation source

Since the half-life of the radiation source is 5.4 years it has to be replaced periodically. Only TAPIO® Technologies, Inc. or someone else assigned by TAPIO Technologies, Inc. possessing the proper licenses is entitled to replace the source. TAPIO®Technologies, Inc. will take care also for the disposal of the old source.

• License of approval of type-inspection

The basis weight sensor has been evaluated as generally licensed device. A copy of the general license is enclosed

• Radiation profile

There is no measurable radiation being emitted from the device except at very close proximity to its surface, and only then at positions close to the location of the Pm147 source within the sensor housing. (Measurement of stray radiation profile by Atlan-Tech Inc.- Quote from the conclusion)

• Operating license of the employer and the person responsible

The institution operating the TAPIO-analyzer has to have a person possessing the proper LICENSE to safeguard the radioactive materials on that particular work place. He is responsible for the limitations regarding the operating personnel (age over 18 years, pregnancy etc.) and for the overall possession and handling of radioactive materials (cf. level control, on-line basis weight etc. licenses)!

• Additional reading

It is recommended to read additional instructions regarding safety procedures (fire, earthquake etc.) provided by the employer.
In the following is the name of the mill person responsible for the above licenses and the confirmation signature of the company:

Place:_____ Date:_____

NAME AND PHONE NUMBER OF THE PERSON RESPONSIBLE:

--- ---
Name of responsible person Official employer signature

Telephone where to reach: _____