Shutdown Plant Problems

GE BWR/4 Technology Course

R-504B – 4.10

Objectives

1. Recognize the reasons that risk during outages is significant even though the reactor is shutdown.
   a. Recognize how licensees monitor risk
   b. Identify the primary strategies used to minimize shutdown risk
   c. Recognize how maintenance on a shutdown unit can impact the risk on multi- unit sites.
2. Identify the major accident sequences that contribute to core damage frequency during shutdown plant conditions.

Objectives

3. Recognize the alignment of the RHR system and Recirculation system during shutdown cooling mode of RHR and potential paths that could drain the vessel and/or result in loss of decay heat removal.
4. Identify the primary strategies used by licensees to limit the likelihood of loss of SDC and drain-down events while shutdown.

Objectives

5. Recognize the definition of the term “operation with potential to drain the reactor vessel (OPDRV)”.
6. Recognize additional requirements necessary to minimize the likelihood, or consequences, of draining the vessel.

Overview

- Risk in a Shutdown Plant
- ISLOCA – Interfacing System LOCA
- OPDRV – Operations with the potential for draining the vessel.
- Draindown
- Loss of Shutdown Cooling

Major Accident Sequences for low power or shutdown reactor

- Station Blackout (SBO)
- Loss of Coolant Accident (LOCA)

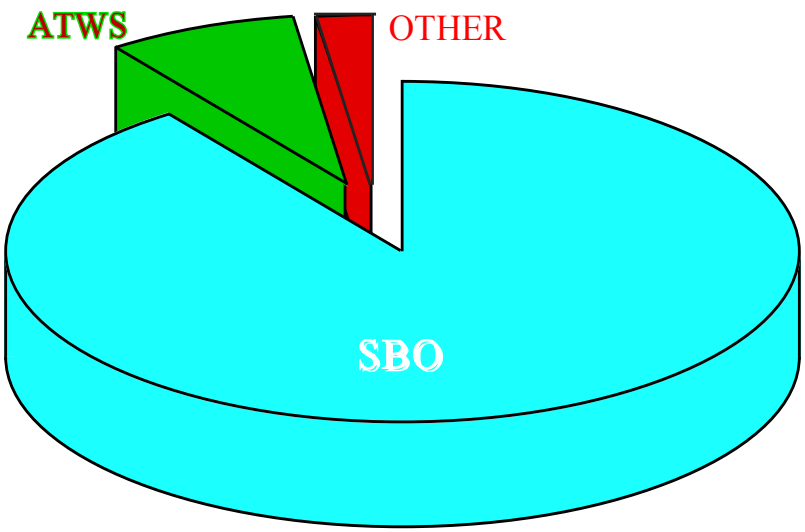

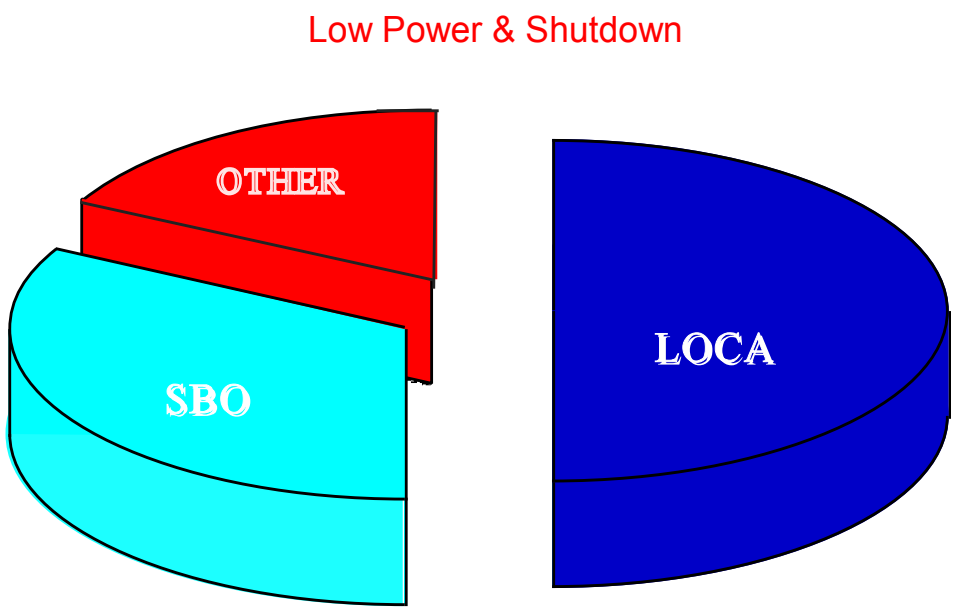

Fig 4.10-1 Compares core damage frequencies for high power vs. low power and shutdown operations.

- The ATWS is not possible in a SD plant
- LOCAs dominate – Many automatic features are disabled, heavy reliability on Operator action
- SBOs more likely to lead to IFSLOCA

What's different about being shutdown?

- Infrequent – unfamiliar practices and procedures
- Large number of workers – Communication and control issues
- Equipment out of service – unfamiliar arrangements, seldom used equipment
- Technical Specifications requirements change…Less restrictive
- Schedule pressure, multiple bosses
- Worker fatigue
- Primary Containment open
- Abnormal Lineups and system modes

Shutdown vs. Power Operational Accidents

- Almost all low power and shutdown mode SBOs sequences lead to an interfacing system LOCA where as the full power sequences do not.
- The containment is always open at the start of the low power and shutdown accidents whereas it is isolated at the start of the full power accidents.
- The probability of arresting core damage in the vessel is greater for full power accidents than for low power and shutdown conditions.
- Switchyard work increases chance of LOOP or LOPP

A LOCA is More Likely and risk of damage or release is greater risk when shutdown

- Containment is open
- Shutdown operations can lead to fuel damage
  - fuel handling events
  - loss of shutdown cooling
- ECCS systems disabled requiring operator intervention to protect fuel

Risk Impact on Multi Unit Sites

Outages for plants on multi unit sites may impact the other unit(s).

- Some sites share diesel generators. The shared diesel is typically called a swing diesel.
- Some dual plant sites have the ability to cross connect Steam systems, Service Water systems, and share Switchyards.
- Errors in maintenance, testing, or restoration of systems can adversely affect the other unit(s) on site.

Monitoring

- Scheduling matrices – ensure safety maintained and risk minimized during maintenance.
- HLA activities – Heightened Level of Awareness
- PRA, performance indicators, quality assurance program, and supervisory oversight

Manage

- Human performance Tools
  - STAR
  - Pre-job Briefs
  - Peer Check
  - Procedural Adherence
  - Flagging
  - 3-way communication
- Restricted access during maintenance of redundant equipment or trains required for accident mitigation.
- Inspections
- Observations
- Corrective Action Program
- Increased supervisory oversight
- Just-in-Time training, Special operations procedures, and identification of High Risk Activities (HRAs)

Interfacing System LOCA (ISLOCA)

- Possible situations in which an ISLOCA could occur:
  - reactor core isolation cooling system
  - high pressure coolant injection system
  - core spray system
  - residual heat removal system
  - reactor water cleanup system
  - control rod drive system

ISLOCA

- An ISLOCA is a class of events where a low pressure system is accidentally subjected to primary reactor water at high pressures, and an unisolable leak (or break) is developed.
- An ISLOCA becomes of particular concern if the unisolable leak/break takes place outside the containment.
  - loss of water inventory cannot be recovered for long term core cooling.
  - the leakage path will transfer any contaminants and fission products directly outside the containment and potentially offsite.

OPDRVs

- Operations with the potential for draining the Reactor Vessel.
- No T.S. Definition – T.S. require secondary containment to be operable during OPDRVs.
- The Plain Language Meaning - The licensee shall consider any activity that could potentially result in draining or siphoning the RPV water level below the top of the fuel, <u>without taking credit for mitigating measures</u>, to be an OPDRV activity.

NRC Actions

- Enforcement discretion for outages occurring through December 31, 2013 (RIS 2012-11)
- Initiate an improvement to STS for BWRs that will allow a graded approach to OPDRV requirements.

General Interim Actions

1. During OPDRV activities the water level shall be equal to or greater than 23 feet.
2. At least one safety-related pump shall be available (preferably aligned to the division with the required operable EDG) and shall be aligned to a makeup water source with the capability to inject water equal to, or greater than, the maximum potential leakage rate from the RPV for a minimum time period of 4 hours.
3. During OPDRV activities, the time to drain down the water inventory from the RHR- High Water Level to the top of the RPV flange shall be greater than 72 hours.
4. OPDRV activities shall be performed, to the maximum extent practicable, in a manner that maintains defense in depth against the release of fission product inventory.
5. If the Licensee has a T.S. that is more restrictive than the requirements stated then it must follow its own T.S.

Loss of Shutdown Cooling

The loss of Shutdown Cooling may be caused in a variety of ways:

- Loss of power
- Human performance errors
- Failed Circuitry
- Failed Equipment
- Improper lineups

Improper lineups

- As discussed earlier the RHR system (Fig. 4.10-2) when in shutdown cooling mode RHR takes a suction from the vessel and discharges to the vessel via the Recirculation discharge piping. If the minimum flow valve is open then a portion of the RPV inventory will be discharged to the Suppression Pool.
- In addition, if B RHR is in Shutdown Cooling mode and inadvertently used in another mode, not only will this drain the vessel to the Suppression Pool but there will also be a loss of Shutdown Cooling.

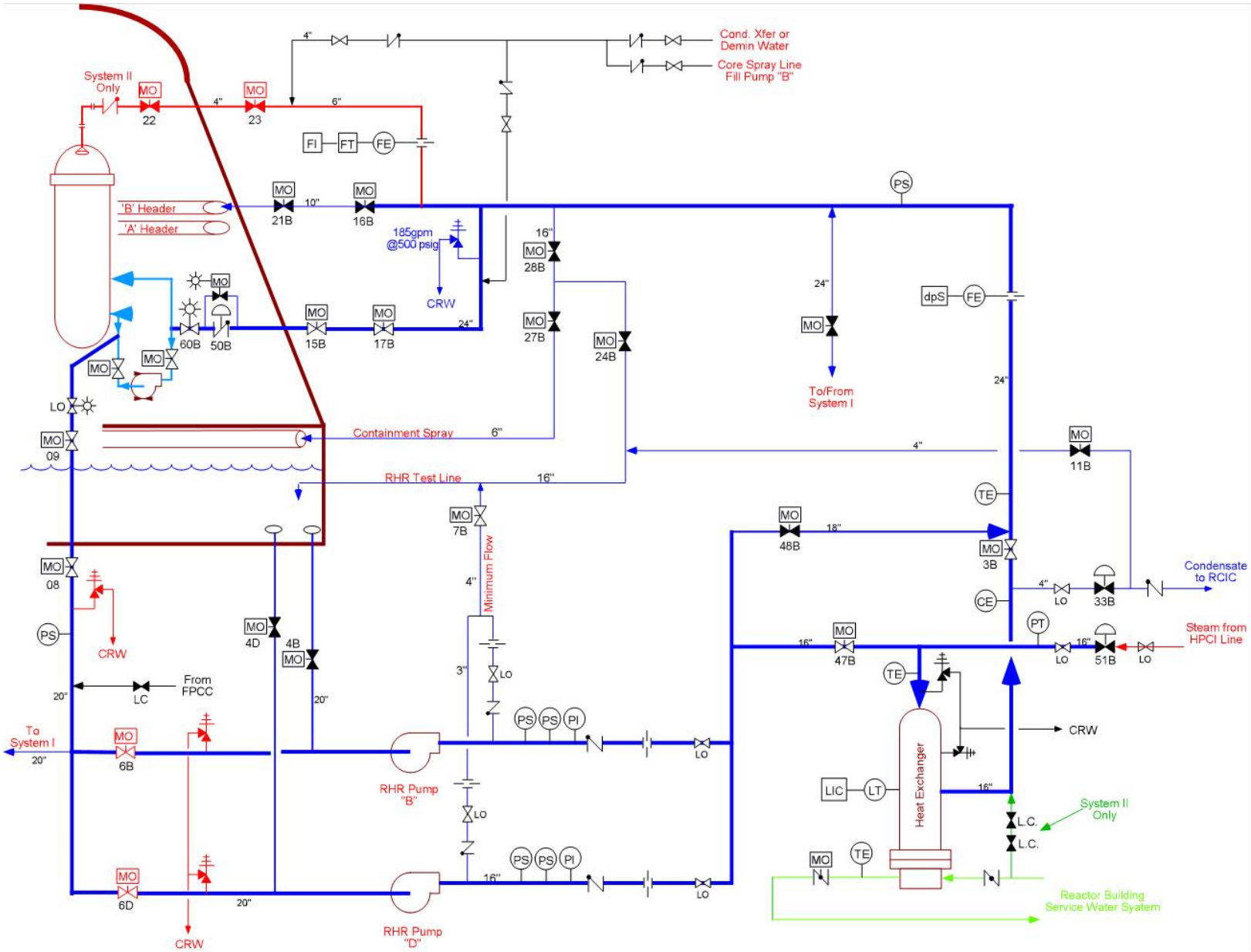
Cond. Xfer or Demin Water
Core Spray Line Fill Pump "B"
System II Only
MO 22
MO 23
4"
6"
FI
FT
FE
'B' Header
'A' Header
MO 21B
10"
MO 16B
185gpm @500 psig
CRW
16"
MO 28B
MO 27B
MO 24B
24"
MO 15B
MO 17B
MO 60B
MO 50B
MO
LO
MO 09
Containment Spray
6"
RHR Test Line
16"
PS
dpS
FE
To/From System I
MO 11B
TE
MO 7B
Minimum Flow
MO 48B
18"
MO 3B
Condensate to RCIC
CE
LO
33B
PT
Steam from HPCI Line
51B
MO 47B
MO 08
PS
CRW
MO 4D
4B
From FPCC
LC
20"
To System I
MO 6B
RHR Pump "B"
PS
PI
3"
Heat Exchanger
LIC
LT
L.C.
System II Only
MO 6D
RHR Pump "D"
Reactor Building Service Water Syatem

Bypass Flow

- Recirculation Pump Discharge valve must be shut

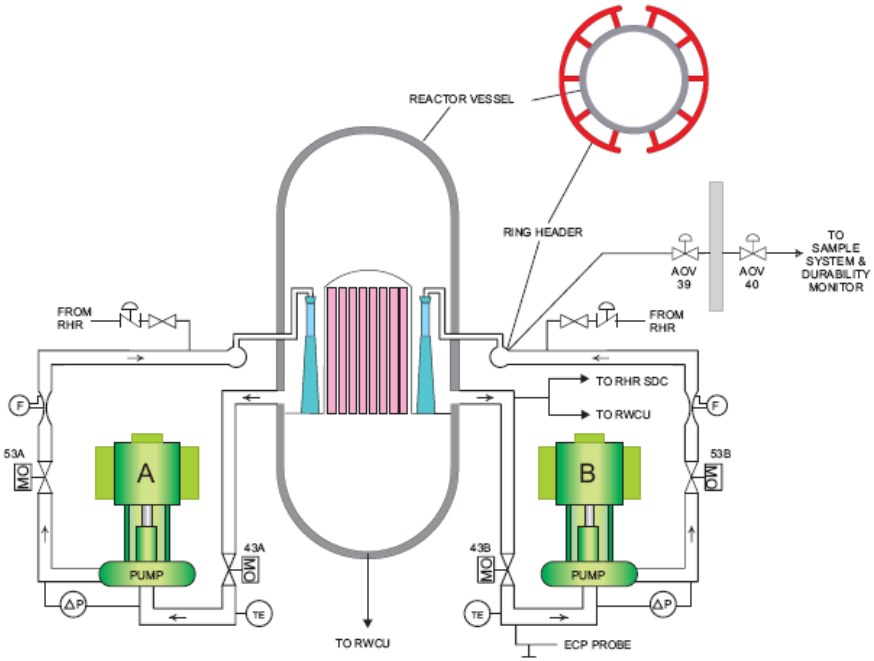

Other issues

- Configuration Control
- Industrial Safety
- FME
- Refueling Errors

Objectives

1. Recognize the reasons that risk during outages is significant even though the reactor is shutdown.
   a. Recognize how licensees monitor risk
   b. Identify the primary strategies used to minimize shutdown risk
   c. Recognize how maintenance on a shutdown unit can impact the risk on multi- unit sites.
2. Identify the major accident sequences that contribute to core damage frequency during shutdown plant conditions.

Objectives

3. Recognize the alignment of the RHR system and Recirculation system during shutdown cooling mode of RHR and potential paths that could drain the vessel and/or result in loss of decay heat removal.
4. Identify the primary strategies used by licensees to limit the likelihood of loss of SDC and drain-down events while shutdown.

Objectives

5. Recognize the definition of the term “operation with potential to drain the reactor vessel (OPDRV)”.
6. Recognize additional requirements necessary to minimize the likelihood, or consequences, of draining the vessel.