Intergranular Stress Corrosion Cracking

GE BWR/4 Technology Course

R-504B – 4.9

Objectives

1. Recognize the potential consequences of component failures caused by intergranular stress corrosion cracking (IGSCC) both during normal operation and accident conditions.
2. Recognize the mechanism for IGSCC and the conditions that make IGSCC more likely.

Objectives

3. Identify the primary strategies used by licensees to limit the likelihood of IGSCC and ensure adequate system reliability and component integrity.
4. Recognize the factors used to establish a susceptibility ranking to shroud cracking.
5. Identify the inspection methods used to detect degradation from IGSCC.

Corrosion

- Weakening of structural component
- Material deterioration due to electro-chemical processes
- Localized corrosion mechanisms generally involve some form of cracking
- SS 314 & 314L – stainless steels include 10% or more chromium in the alloy
- SS 316NG – nuclear grade. Chromium, Nickel and Molybdenum gives greater corrosion resistance

Stress Corrosion Cracking

- Stress corrosion cracking requires the simultaneous presence of three conditions:
  - Conducive environment
  - Susceptible Material
  - Tensile stress above the threshold level

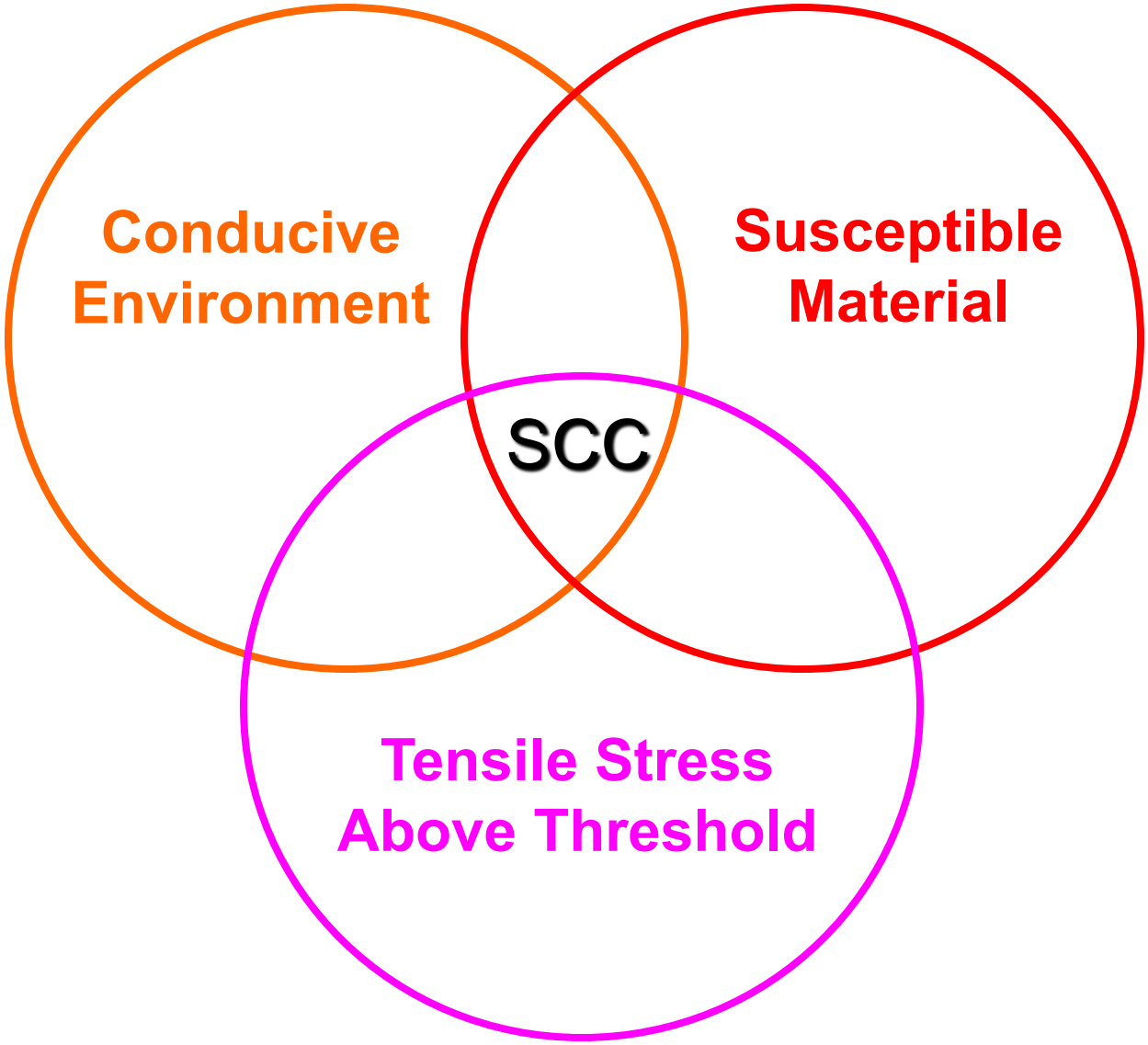
Conducive Environment
Susceptible Material
SCC
Tensile Stress Above Threshold

Requirements for IGSCC

- Conducive Environment
  - Hot, oxygenated water and possibly chlorides & sulfates
- Susceptible Material
  - SS 304 weld, Chromium depletion
- Tensile Stress above the threshold level
  - Internal stresses from welding

IGSCC

- When cracking develops across a grain boundary, the corrosion is known as Intergranular Stress Corrosion Cracking or IGSCC.

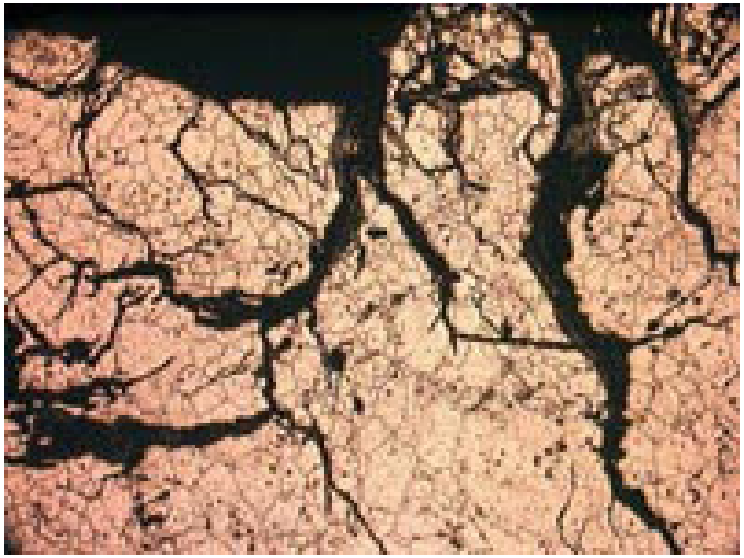

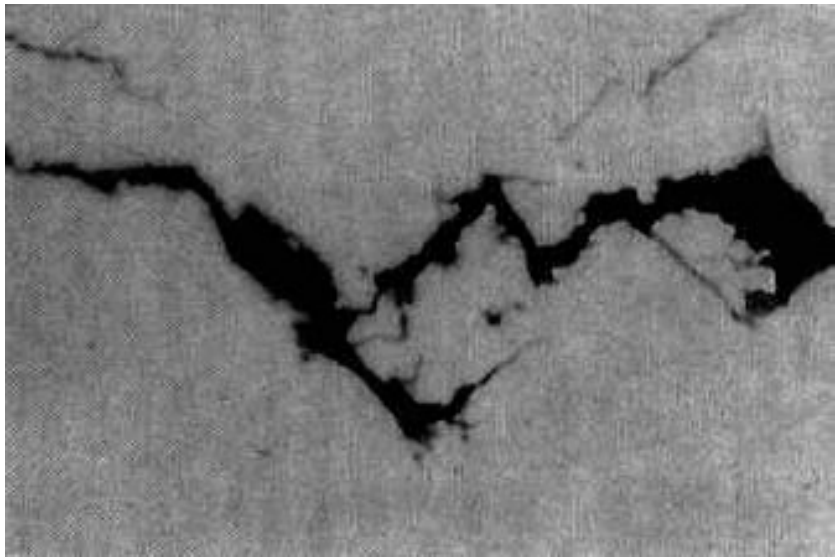

Grain Boundary

- The interface between two grains in a polycrystalline material.
- Disrupt the motion of dislocations.
- Tend to decrease the electrical and thermal conductivity of the material.
- The high interfacial energy and relatively weak bonding in most grain boundaries often makes them preferred sites for the onset of corrosion and for the precipitation of new phases from the solid.
- Important to many of the mechanisms of creep.

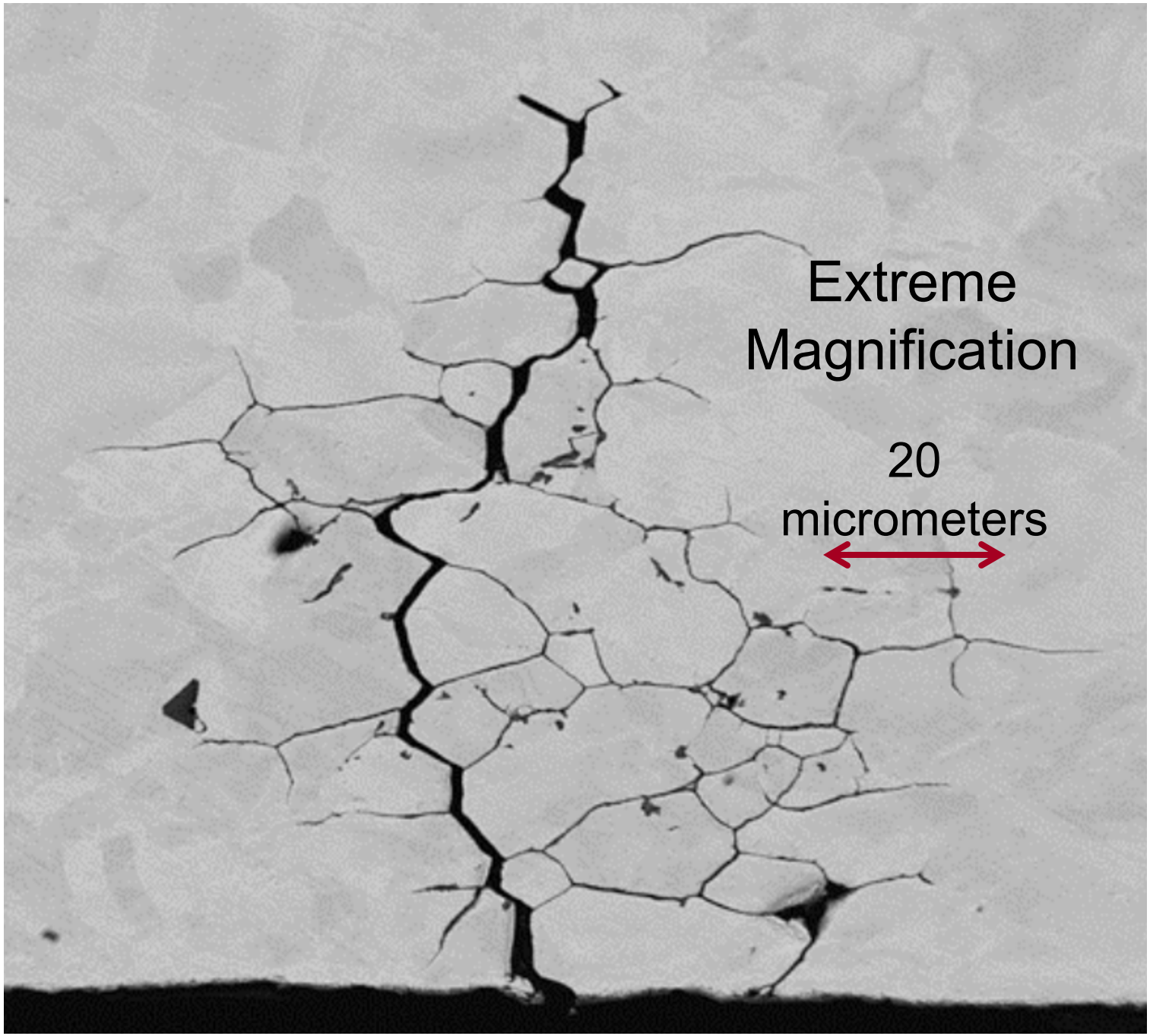
Extreme
Magnification
20
micrometers

Heat Affected Zone

- The area of the weld which has had its microstructure and properties altered by welding or heat intensive cutting operations.
- The extent and magnitude of property change depends primarily on the
  - base material
  - weld filler metal
  - amount and concentration of heat input by the welding process.

Heat Affected Zone

- The cross-section of a welded butt joint, with the darkest gray representing the weld or fusion zone, the medium gray the heat affected zone, and the lightest gray the base material.

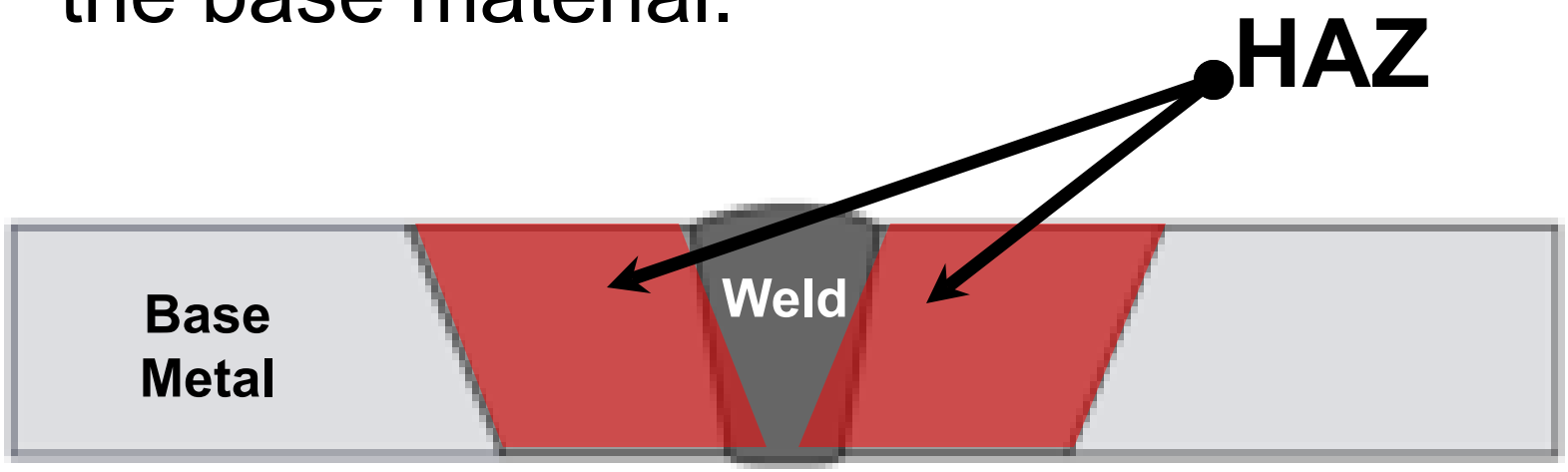

Type 304 Stainless Steel

- The reactor environment contains hot dissolved oxygenated water
- Oxygen is highly electronegative
- 304 SS is susceptible to corrosion attacks from dissolved oxygen
- Impurities such as chlorides or sulfates accelerate crack propagation

304 SS Weld Sensitization

- 304 SS weld can become sensitized as it cools from 1500°F to 900°F
- Chromium is depleted from grain boundaries
- Weld creates residual stresses, some of which are in the heat affected zone

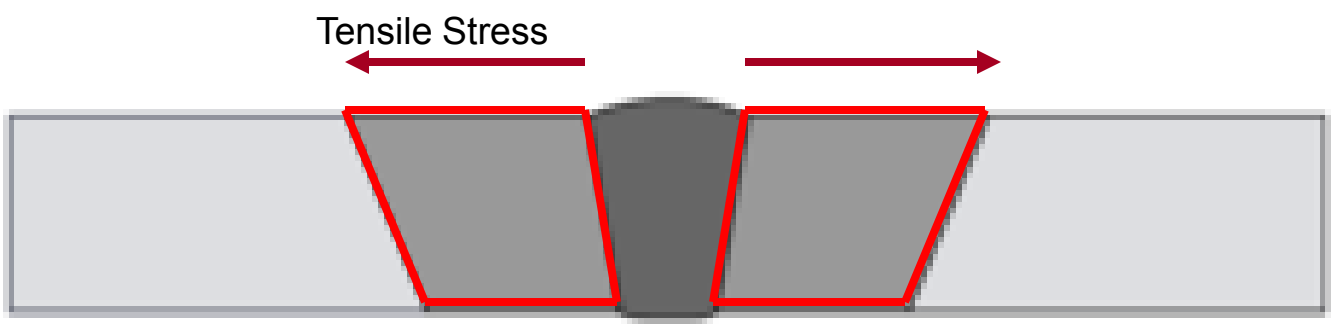

Alloys 600 & X-750

- Nickel based alloys known as Inconel
- Used extensively in PWRs for
  - steam generator tubing
  - reactor vessel head penetrations
  - cladding
- Numerous in-service failures on both primary and secondary sides.

Alloy 182

- Ni-based weld filler metal that is used in applications requiring high strength at intermediate temperatures.
- In service stress-corrosion cracking (SCC) in the base metal adjacent to the weld heat affected zone (HAZ) can be related to residual plastic strains present after welding.

IGSCC Cracking is Most Likely

- Long Operational History
- High Conductivity Water
- High Carbon Steel
- Surface Cold Work
- High Residual Weld Stress
- High Neutron Flux

IGSCC Ranking

- Length of operation
- Water chemistry / conductivity
- Material susceptibility
- Fabrication
- Neutron Fluence

Susceptible Components

- Core Shroud
- CRD Stub Tube Penetration
- In-Core Housing
- Recirculation Inlet and Outlet Nozzle
- Shroud-to-shroud support weld
- Shroud Access Hole Cover
- Jet Pump Riser Brace (hold-down beams)

Also noted:

- Core spray systems
- Top guides

Objective 1

Core Shroud

- The core shroud is usually a 304 SS cylinder that is located inside the reactor vessel.
- It serves to:
  - provide lateral support to the reactor core
  - direct the flow of water inside the reactor vessel
- Generally regarded as a component whose integrity is critical to maintaining core safety.

Core Shroud Outlined In Blue

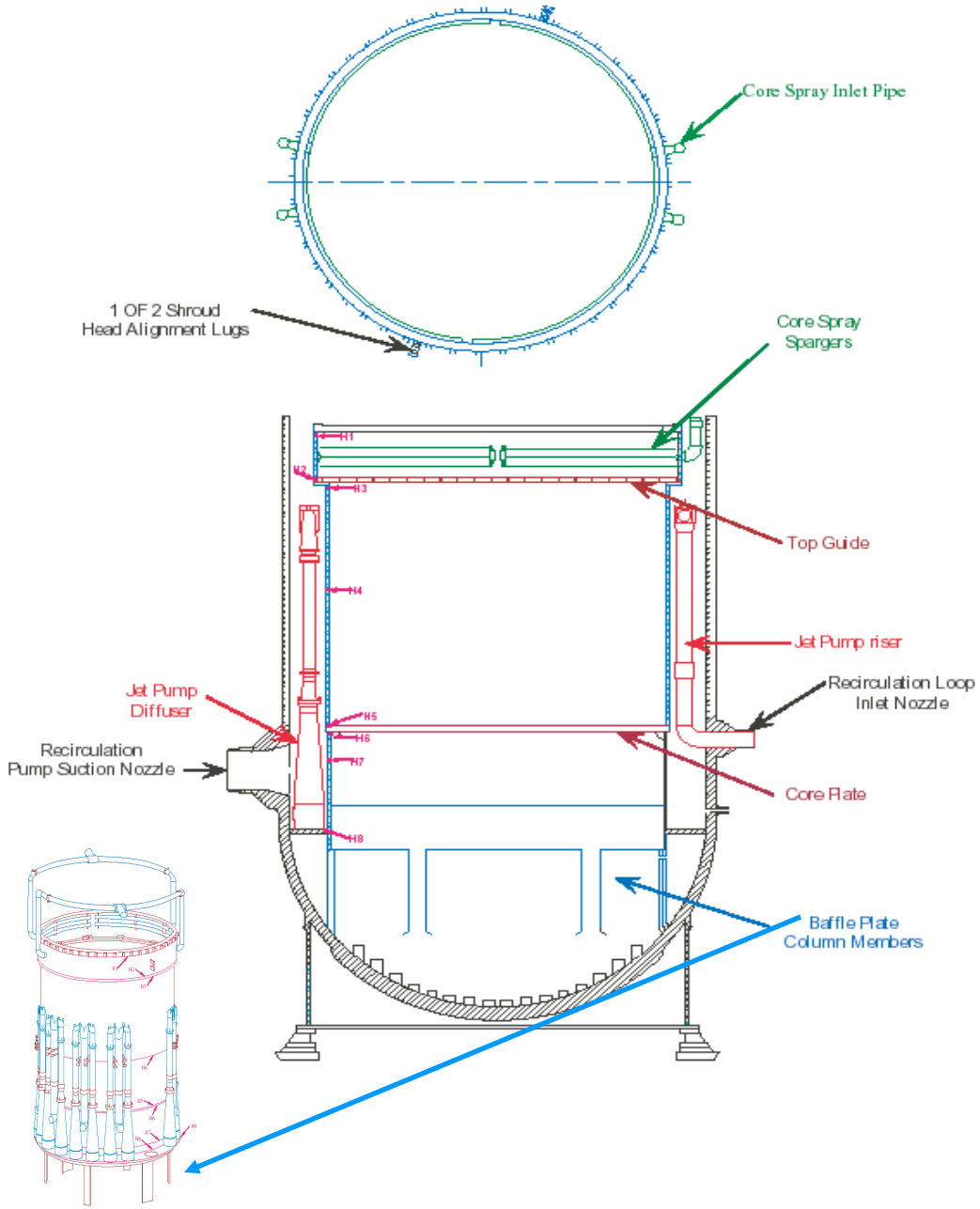

Figure 4.9-1 Core Shroud

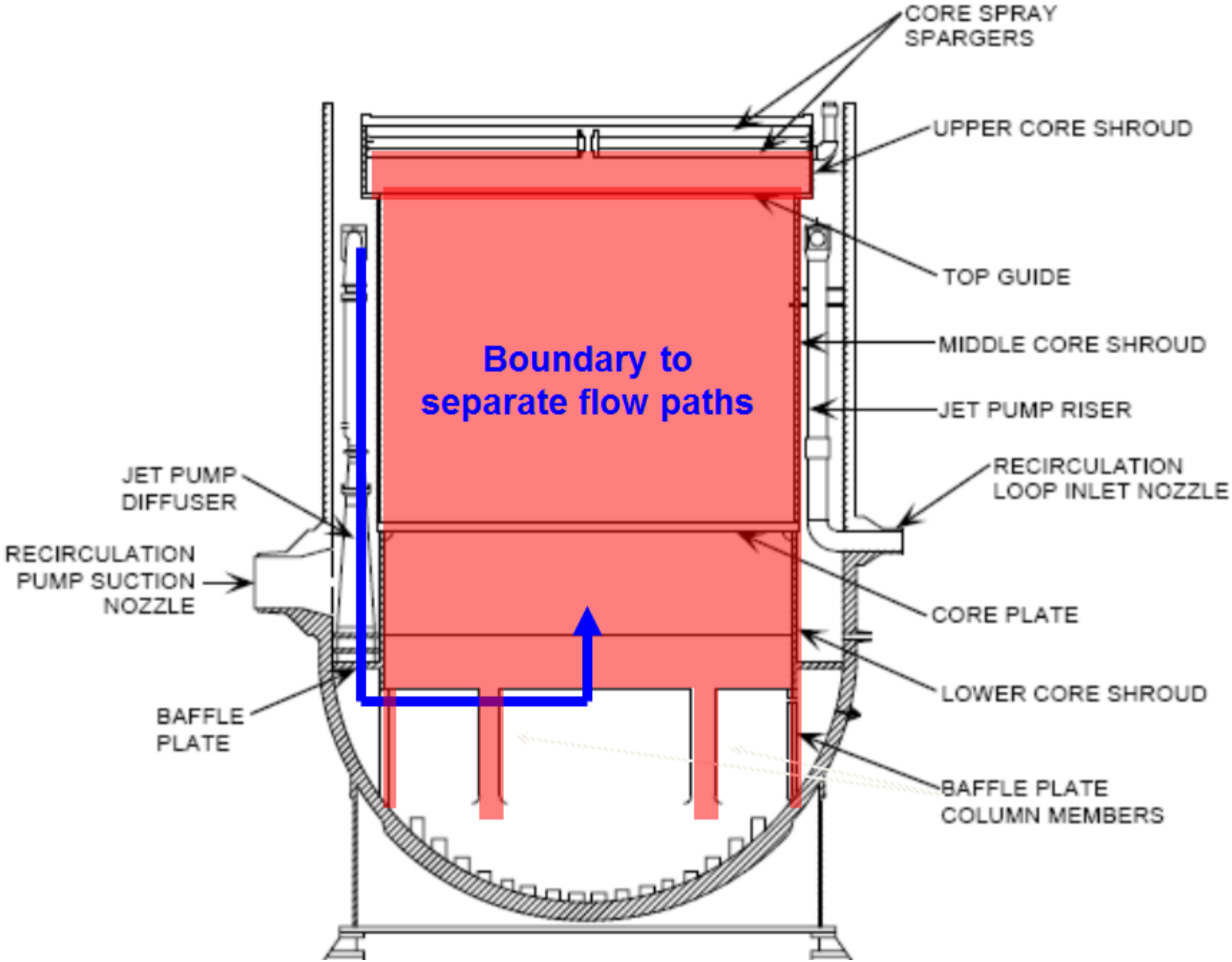
CORE SPRAY SPARGERS
UPPER CORE SHROUD
TOP GUIDE
MIDDLE CORE SHROUD
JET PUMP RISER
RECIRCULATION LOOP INLET NOZZLE
CORE PLATE
LOWER CORE SHROUD
BAFFLE PLATE COLUMN MEMBERS
JET PUMP DIFFUSER
RECIRCULATION PUMP SUCTION NOZZLE
BAFFLE PLATE
Boundary to separate flow paths

Table 4.9-2 BWRVIP Susceptibility Rankings and Core Shroud Inspection Recommendations

Category	Inspection Recommendations	Plant Characteristics	Plants
A	No inspection necessary at this time.	Plants with 304 SS shrouds, <6 years hot operating time, and avg. conductivities <0.030uS/cm (0.030umhos/cm) during the first five cycles of operation.	None
		Plants with 304L SS shrouds,<8 years hot operating time, and avg. conductivities <0.030uS/cm (0.030 umhos/cm) during the first five cycles of operation.	Clinton, Fermi 2, Perry, Hope Creek, Limerick 2, Nine Mile Pt .2, Washington Nuclear Plant 2, River Bend
B	Limited inspection: top guide support ring, core support ring, and mid shroud shell circumferential welds; also the bimetallic weld if accessible.	Plants with 304L SS shrouds, <8 years hot operating time, and avg. conductivities <0.030uS/cm (0.030 umhos/cm) during the first five cycles of operation	Grand Gulf, LaSalle 1 & 2 Limerick 1, Susquehanna 1 & 2
C	Comprehensive inspection: Circumferential shroud welds H1-H7 (and H8 for BWR-2s)	Plants with 304SS shrouds and >6 years hot operating time, regardless of conductivity.	<u>Shrouds-weld, plate rings</u> Bruinswick 1& 2, Dresden 2 & 3, Hatch 1, Millstone 1, Oyster Creek, Nine Mile Point 1, Pilgrim, Quad Cities 1 & 2, FitzPatrick
			<u>Shrouds- Forged rings</u> Browns Ferry 1, 2 & 3, Peach Bottom 2 & 3, Vermont Yankee, Monticello, Cooper
		Plants with 304L SS shrouds, >8 years hot operating time, and avg. conductivities >0.030uS/cm (0.030 umhos/cm) during the first five cycles of operation.	Duane Arnold, Hatch 2

Shroud Weld Locations

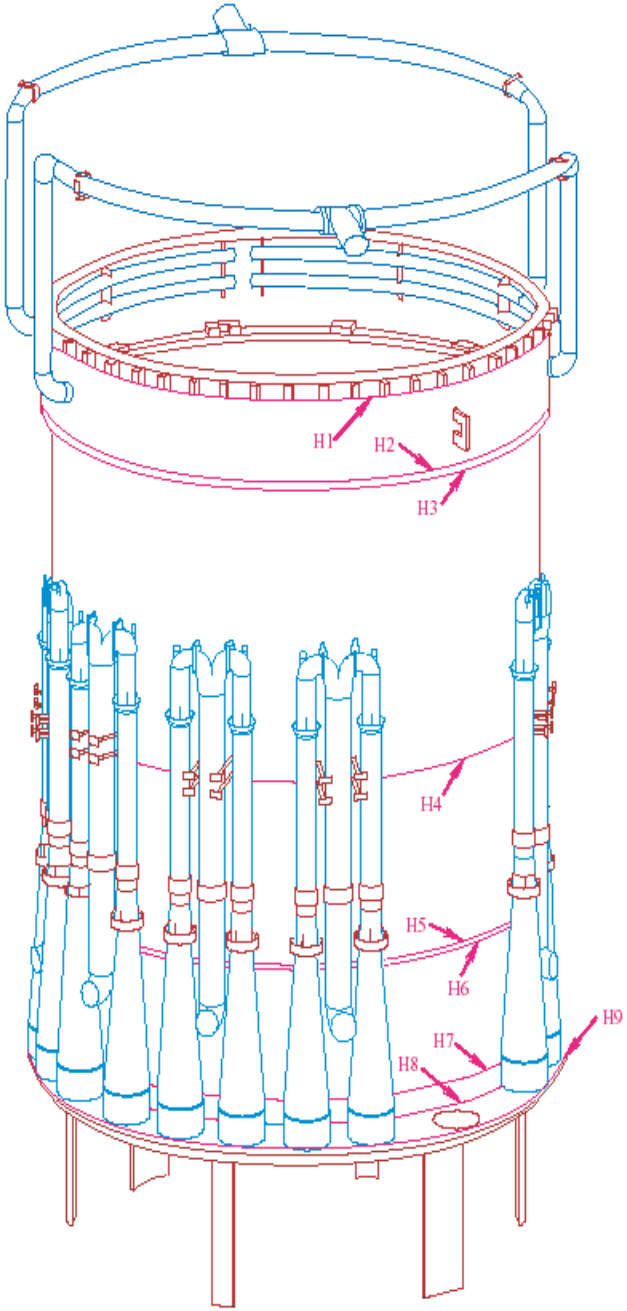

If shroud integrity is compromised then flow can bypass the core

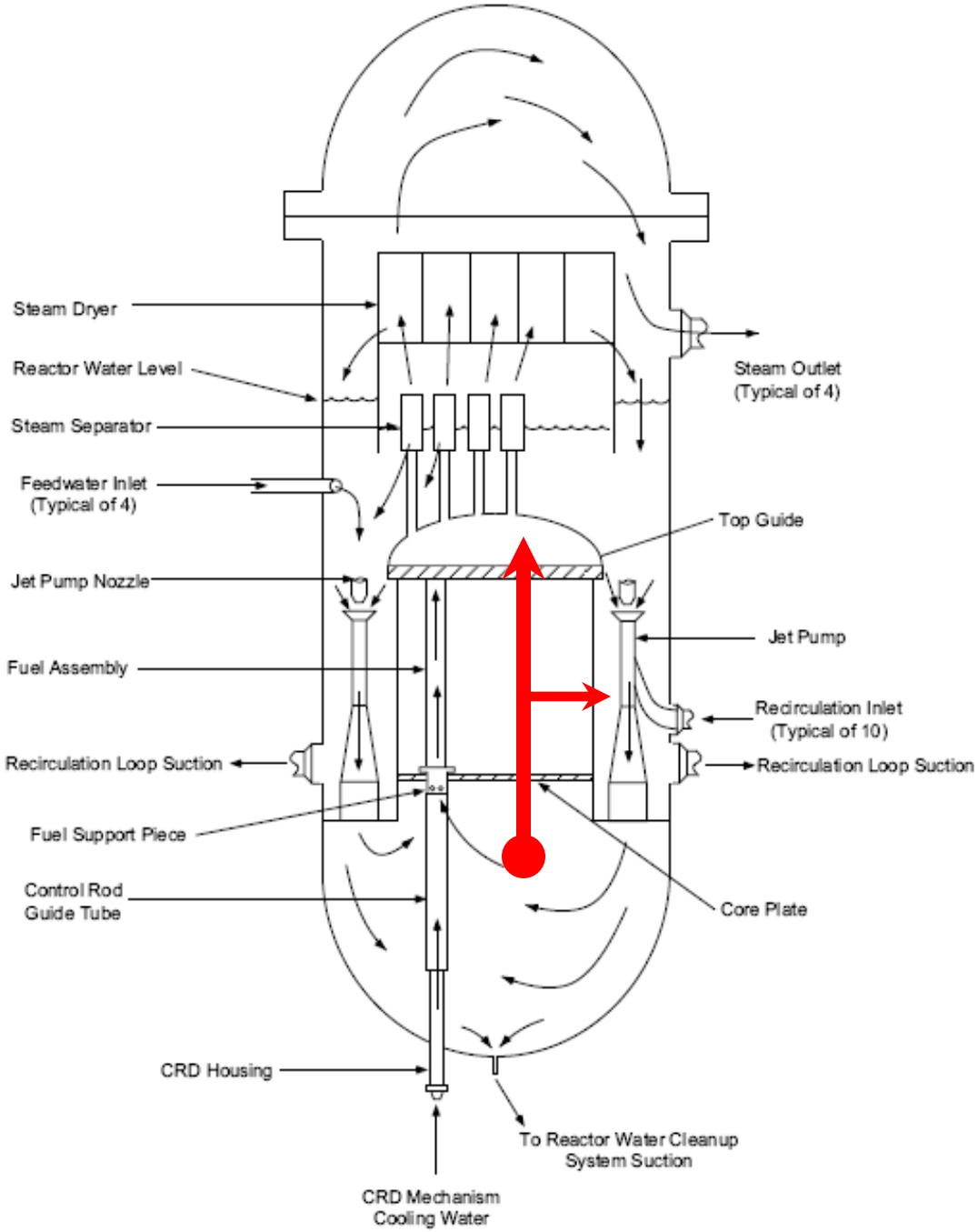

Shroud to Shroud Support Weld

- Shroud support plate (baffle plate) is a horizontal plate welded to the inside of the RPV
- Additional support provided by gusset plates welded to the shroud support and the RPV wall

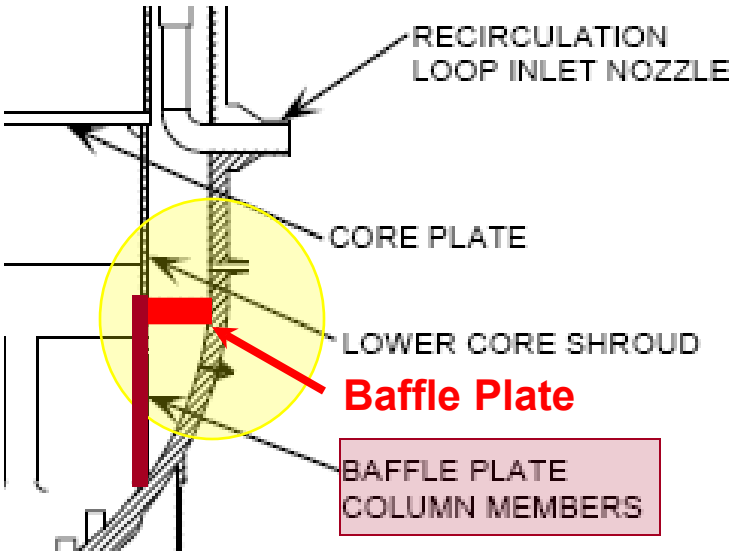
RECIRCULATION
LOOP INLET NOZZLE
CORE PLATE
LOWER CORE SHROUD
Baffle Plate
BAFFLE PLATE
COLUMN MEMBERS


Shroud Support Plate (Baffle Plate) to Vessel Weld

Gusset

- A **gusset** is a structure designed to reinforce a joint where two or more disconnected parts meet
- A triangular metal bracket used to strengthen a joist.

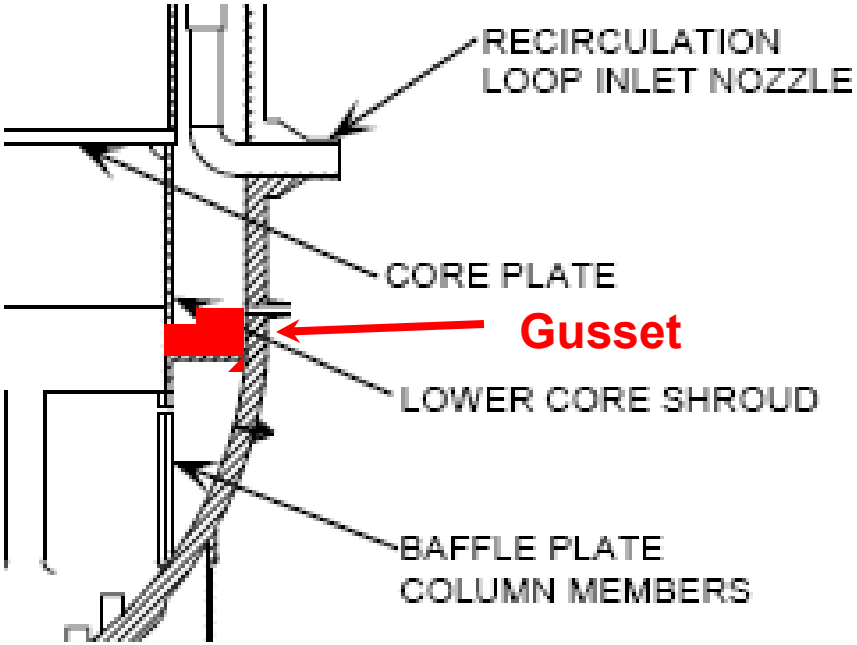

Shroud Functions

- Floodable volume in the event of a LOCA

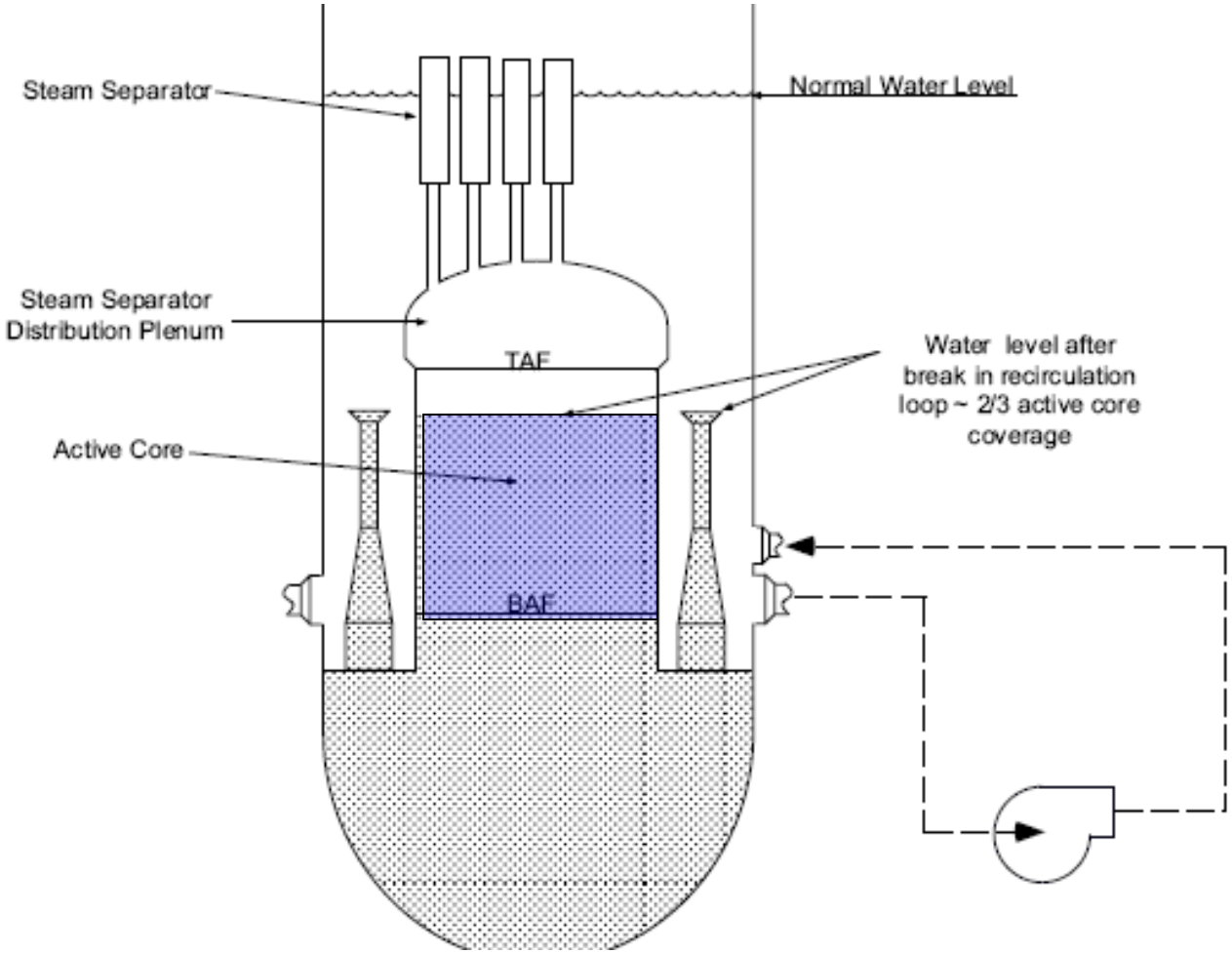

Shroud Functions

- Mounting surface for core spray spargers

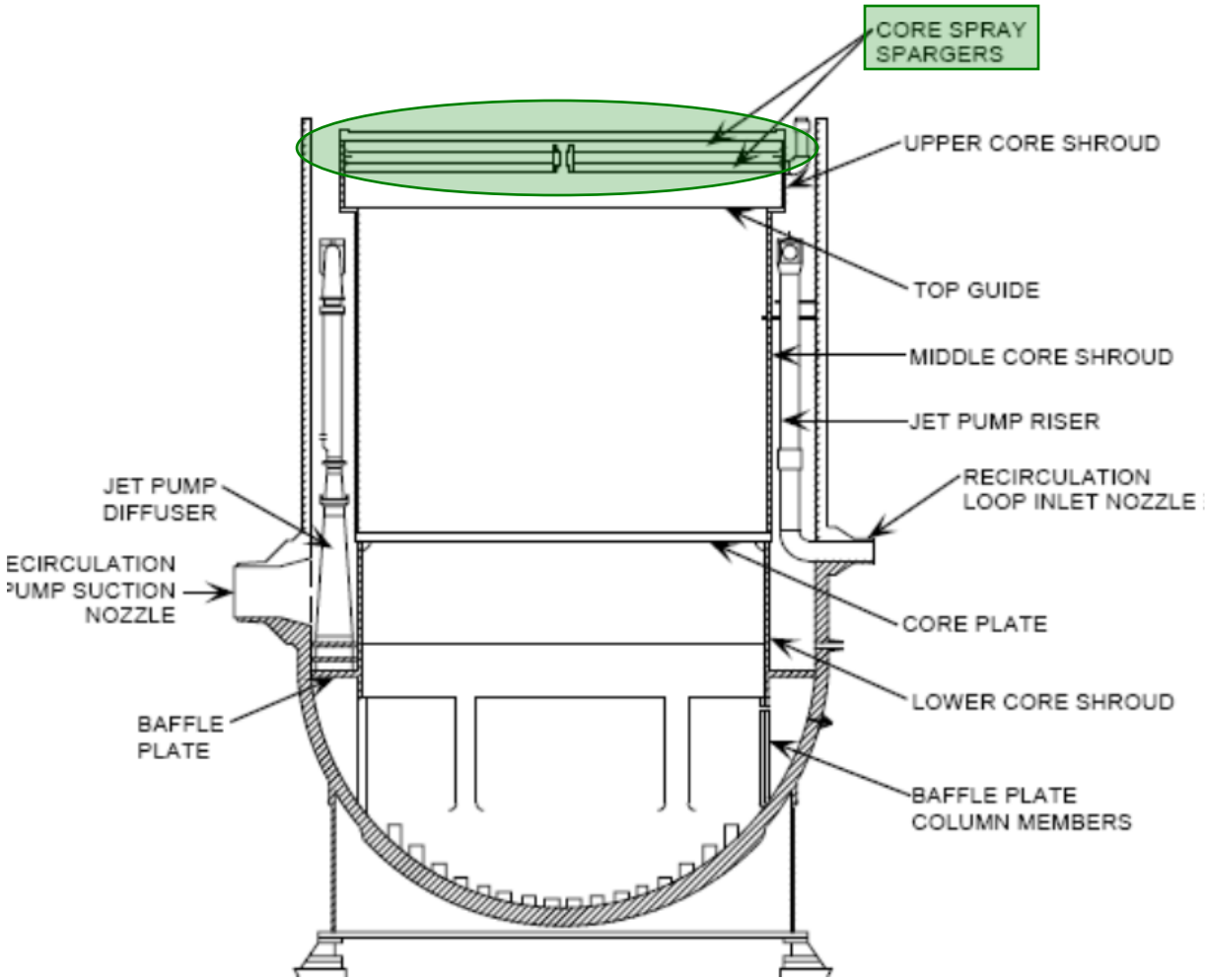

Shroud Functions

- A core discharge plenum, directing steam water mixture into the moisture separator assembly

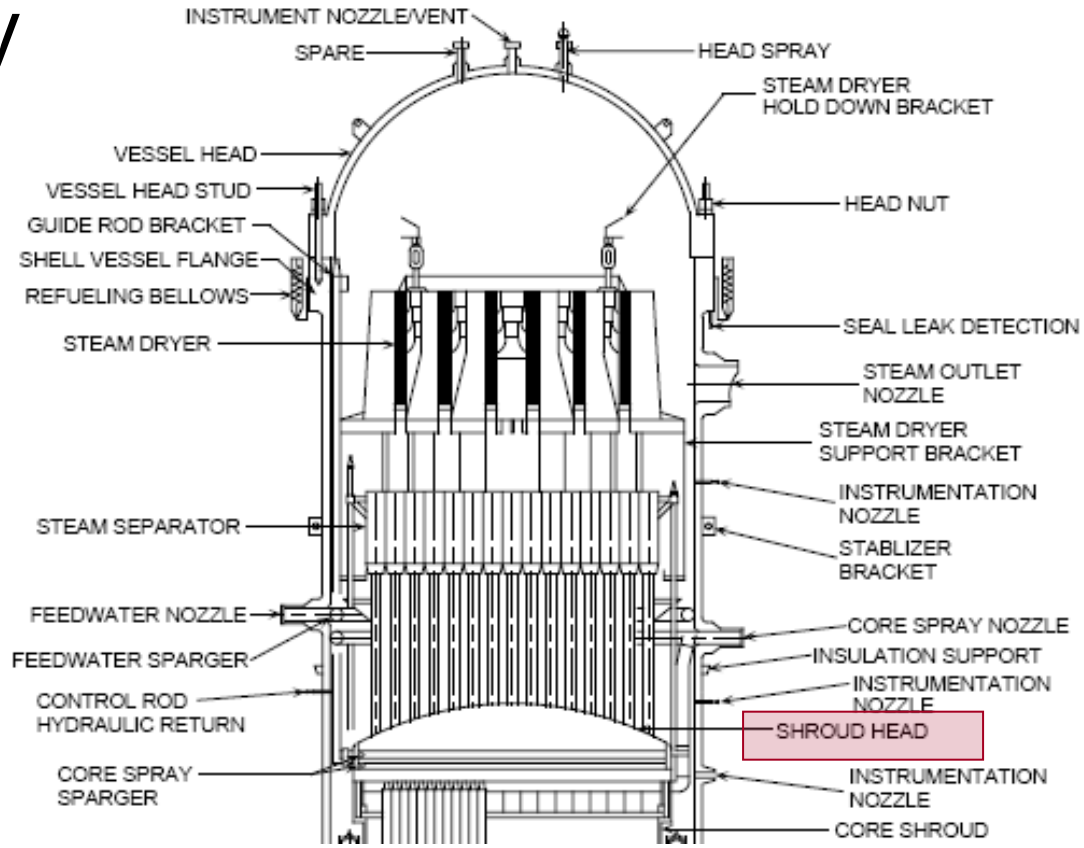

CRD Stub Tube Penetration

- CRD housing is 304 SS
- Weld stressed
- In extreme case, fuel support and rod movement <u>could</u> be adversely affected

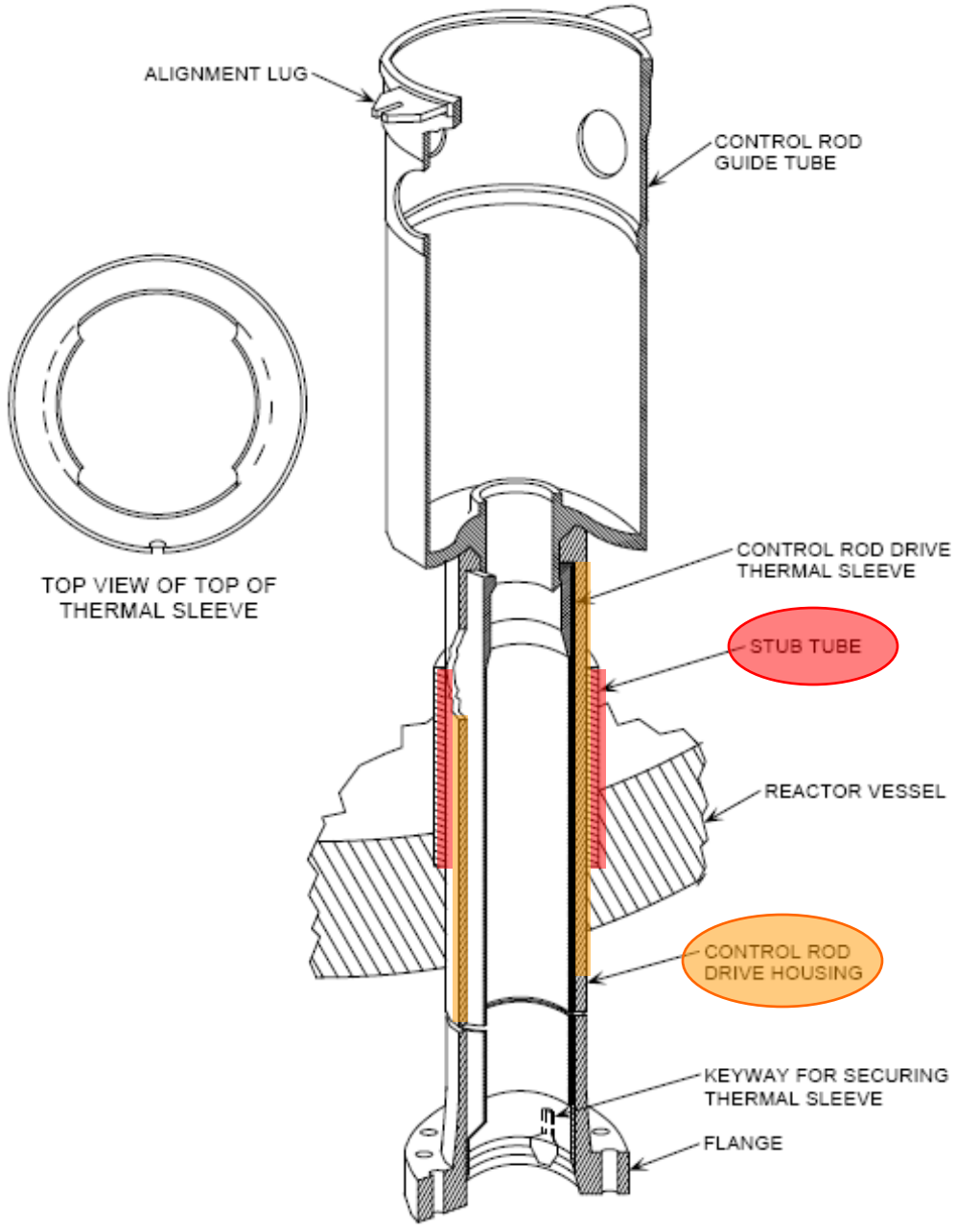
ALIGNMENT LUG
CONTROL ROD GUIDE TUBE
TOP VIEW OF TOP OF THERMAL SLEEVE
CONTROL ROD DRIVE THERMAL SLEEVE
STUB TUBE
REACTOR VESSEL
CONTROL ROD DRIVE HOUSING
KEYWAY FOR SECURING THERMAL SLEEVE
FLANGE


CRD Stub Tube Weld

In-Core Housing

- In-core housings
  - neutron monitoring detectors
- Cracking found at foreign BWR
- Through wall crack at bottom head weld
- Improbable but possible spread of crack to vessel bottom head, compromising vessel integrity

Recirculation Inlet and Outlet Nozzle

- Identified in inlet nozzles
- Weld between safe ends and nozzle
- Worst case scenario, crack propagates into vessel
- Brittle fracture at low temperature evolutions such as hydrostatic testing
- Many licensees replaced recirculation piping

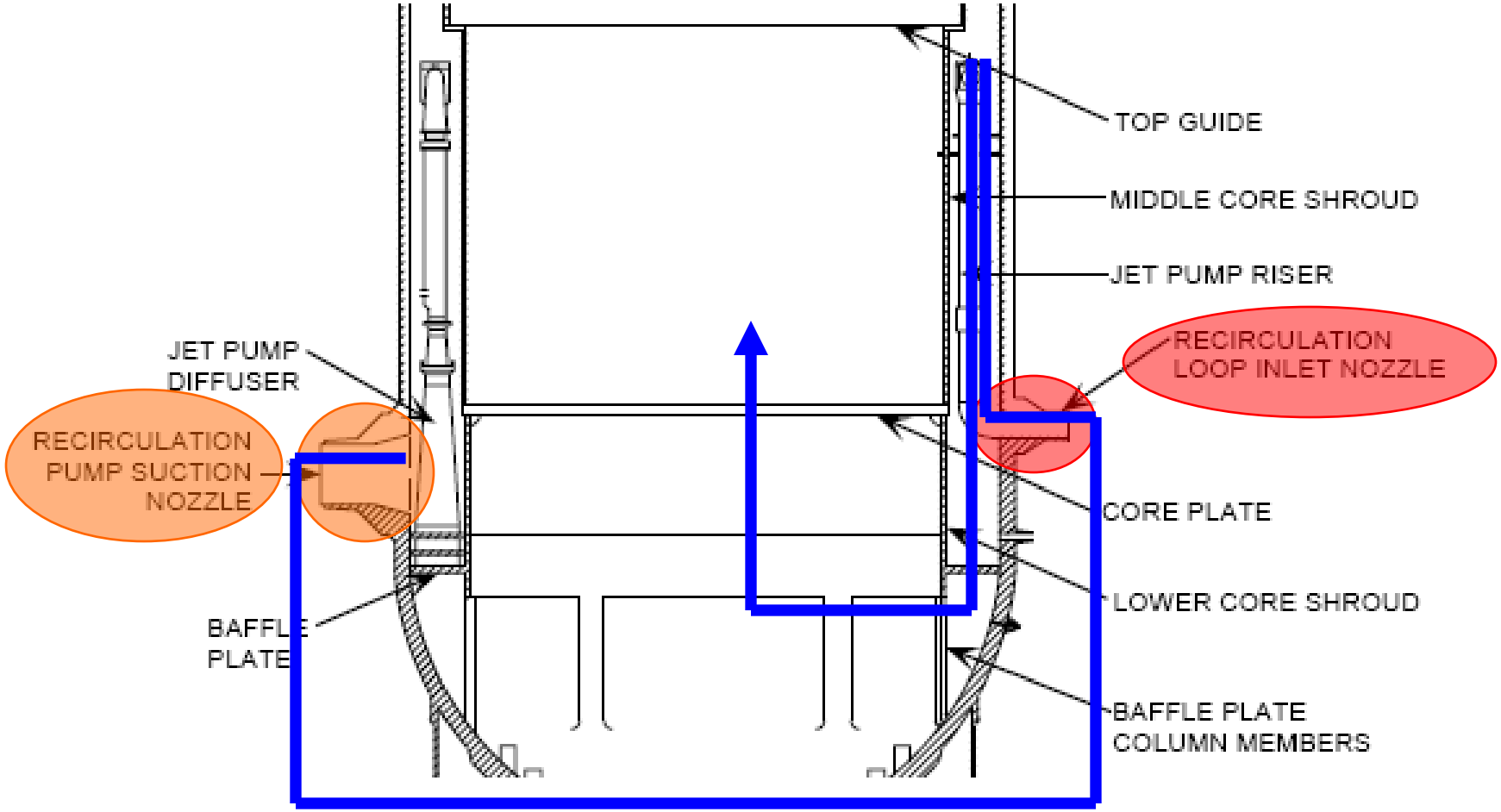
TOP GUIDE
MIDDLE CORE SHROUD
JET PUMP RISER
RECIRCULATION LOOP INLET NOZZLE
JET PUMP DIFFUSER
RECIRCULATION PUMP SUCTION NOZZLE
CORE PLATE
LOWER CORE SHROUD
BAFFLE PLATE
BAFFLE PLATE COLUMN MEMBERS

Access Hole Cover

- Extensive cracking identified at several BWRs
- Worst case, involves access hole cover through wall cracking leading to detachment
- Creates a large flow path from RPV bottom head region to inlet annulus.
- Flow bypassing core
- Loss of 2/3 core coverage

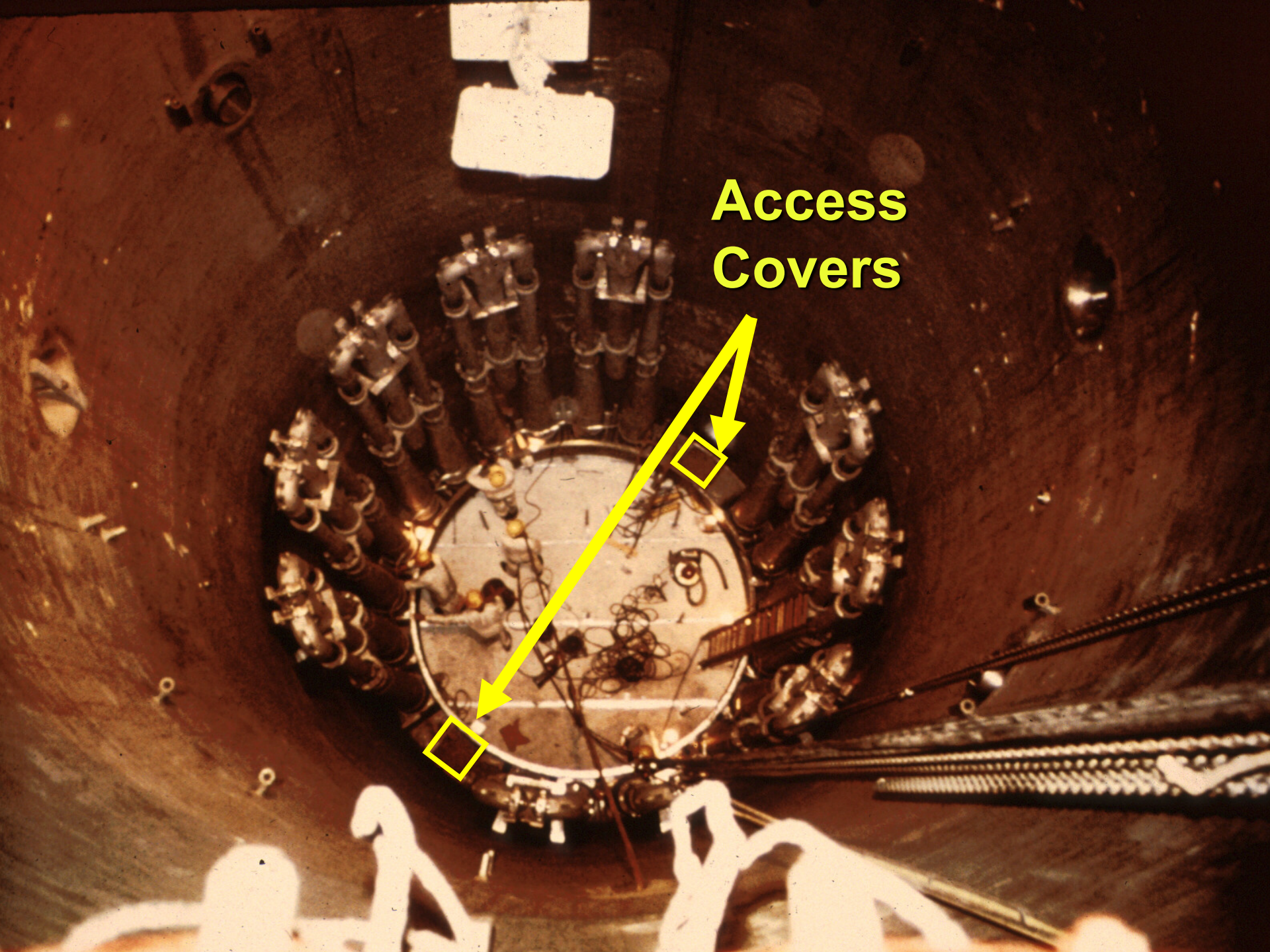
Access
Covers

Jet Pump Riser Brace

- Jet pump riser is connected to the riser brace by a single bevel weld
- Riser brace is welded to the RPV
- One BWR had crack on the weld that attaches the riser brace yoke to the jet pump riser pipe
- Cracking had progressed into the riser pipe
- Affects flow and reflooding.


Vessel Wall
Yoke to Vessel Weld
Riser Brace Yoke to Riser Weld

Consequences

Shroud lift

2/3 core height

Control rods

Recirculation system

Bypass flow

Loose parts

Shroud Lift

- Separated shroud will lift due to the hydraulic force beneath the shroud
- Bypass flow will generate a power-to-flow mismatch indication in the control room.
- Recirculation loop flow will largely be unaffected but could actually rise due to less head loss across the shroud.
- Unable to maintain 2/3 core height

MSL Break

- Main concern is crack in the upper shroud during a MSL break
- The lifting forces during a MSL break may elevate the top guide sufficiently to reduce the lateral support for fuel assemblies
- Fuel assembly movement could restrict control rod insertion

Recirculation Line Break

- Concern is with lower shroud fracture
- Weight of shroud may prevent shroud lifting
- No flow differences to alert control room staff
- Lateral forces from Recirculation Line break could cause shroud to “tip” preventing control rod insertion

Recirculation Line Break

- If recirculation line fracture is large enough and the shroud is displaced enough, the ability to reflood the core would be adversely affected.
- Standby Liquid Control efficacy would similarly be affected.

Other Concerns

- Potential damage to RPV internals due to shroud displacement
- Shroud support legs (baffle plate columns) may be damaged from impact loading when shroud settles
- Core spray line damage

Solutions

- Some utilities have removed susceptible material and replaced it with SS 316NG or 316 low carbon steel.
- Inspection and Flaw Guidelines
- NDE (Non-Destructive Evaluation) Standard
- Repair Design Criteria

Hydrogen Addition

- Hydrogen suppresses oxygen concentration by forming H_2O
- Helps control general oxidation
- Promotes good surface corrosion film (spinel) layer when oxygen is at 20-50 ppb
- Reduces oxidation state of chromium
- Low conductivity conditions help to ensure oxygen suppression with hydrogen

Hydrogen Addition

Spinel is a thinner, more adherent film of a complex metal matrix composed of:

- Iron
- Chromium
- Nickel
- Molybdenum
- Cobalt
- Manganese
- Copper
- Zinc

Chromium, Nickel & Molybdenum replace iron at metal surface = **Spinel**

Hydrogen Addition

- Spinel oxides are thinner and more protective than hematite corrosion films
- Releases far fewer corrosion products than hematite
- Spinel has higher cobalt, chromium & molybdenum concentration than hematite
- Hydrogen chemistry forms ammonia containing N-16

Zinc Injection

- Zinc increases the spinel fraction in stainless steel oxide layers
- Reduces soluble Cobalt {Lowers dose rate}
- Spinel is a corrosion film that resists further oxidation
- Spinel components also include:
  - $ZnFe_2O_4$
  - $CdFe_2O_4$
  - $MnFe_2O_4$

Noble Metals Injection

- Platinum and rhodium
- Applied at 265°F ± 25°F during shutdown for outage
- RHR removes decay heat to keep temperature in band
- Noble metals atoms randomly distributed over core surfaces

Noble Metals Injection

- Platinum and rhodium provide recombination sites for hydrogen and oxidants.
- Prevents and mitigates stress corrosion cracking by reducing oxidant concentration near metal surfaces.

Shot Peening

- Shot peening is a cold working process in which the surface of a part is bombarded with small spherical media called shot.
- Each piece of shot striking the metal acts as a tiny peening hammer imparting a small indentation or dimple on the surface.
- In order for the dimple to be created, the surface layer of the metal must yield in tension.

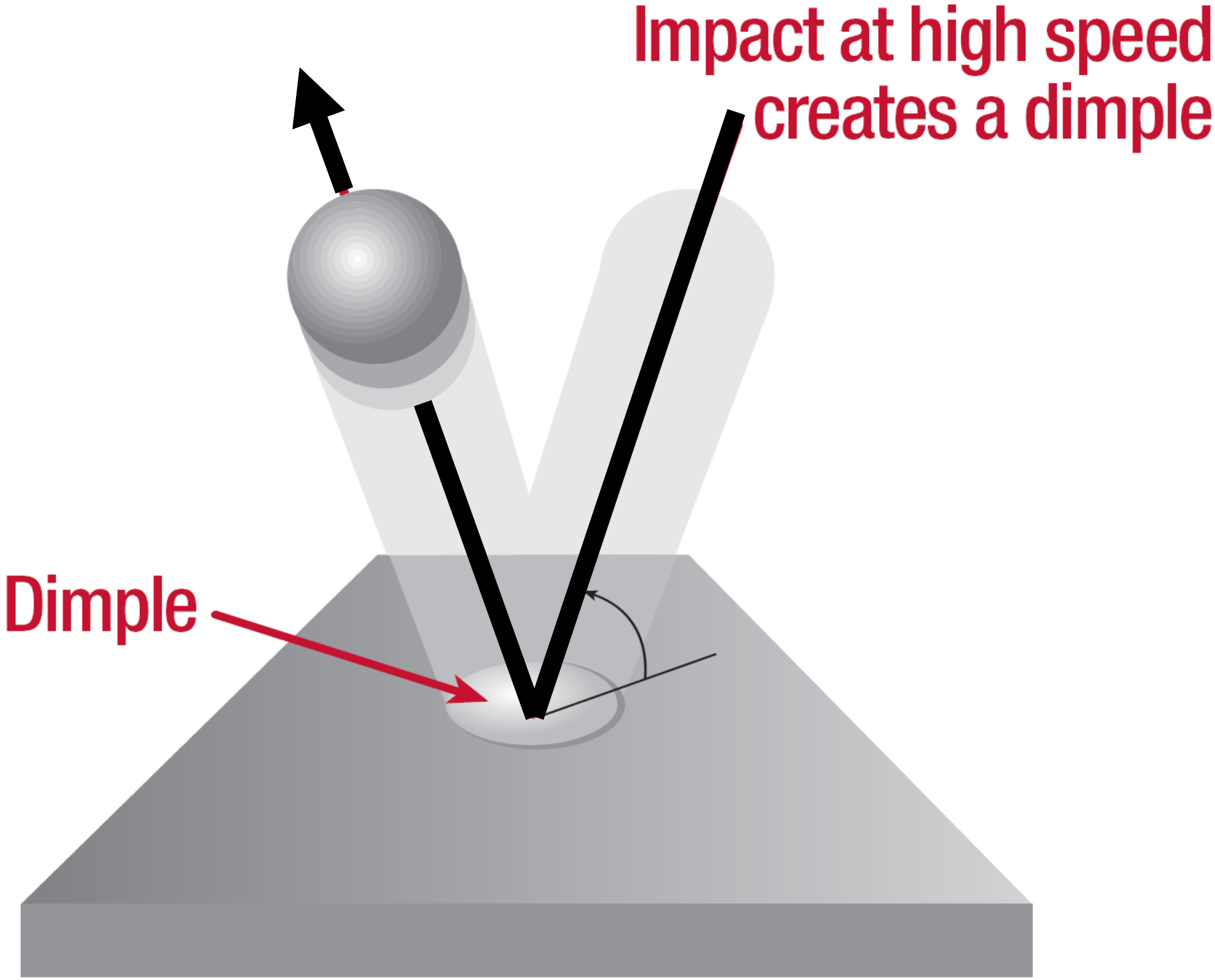
Impact at high speed
creates a dimple
Dimple

Shot Peening

- Below the surface, the compressed grains try to restore the surface to its original shape producing a hemisphere of cold-worked metal highly stressed in compression.
- Overlapping dimples develop a uniform layer of residual compressive stress. IGSCC cracks do not initiate nor propagate in a compressively stressed zone.
- Because nearly all fatigue and stress corrosion failures originate at or near the surface of a part, compressive stresses induced by shot peening provide significant increases in part life.

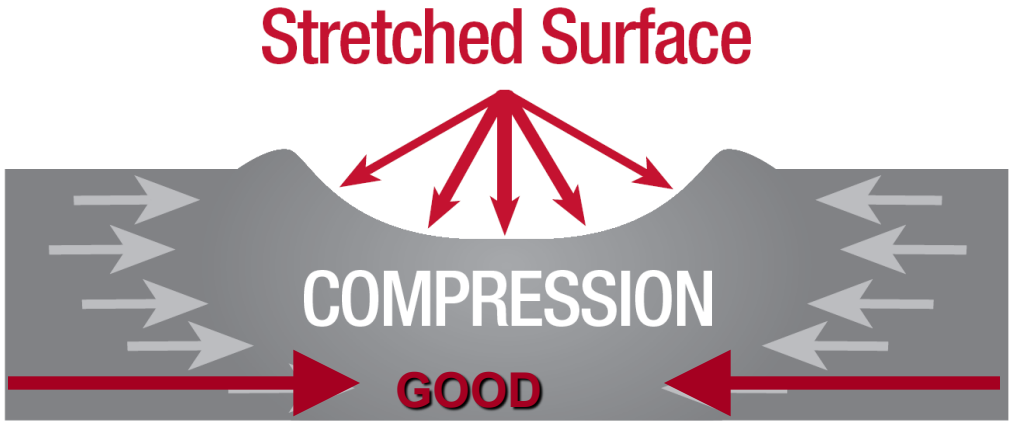
Stretched Surface
COMPRESSION
GOOD

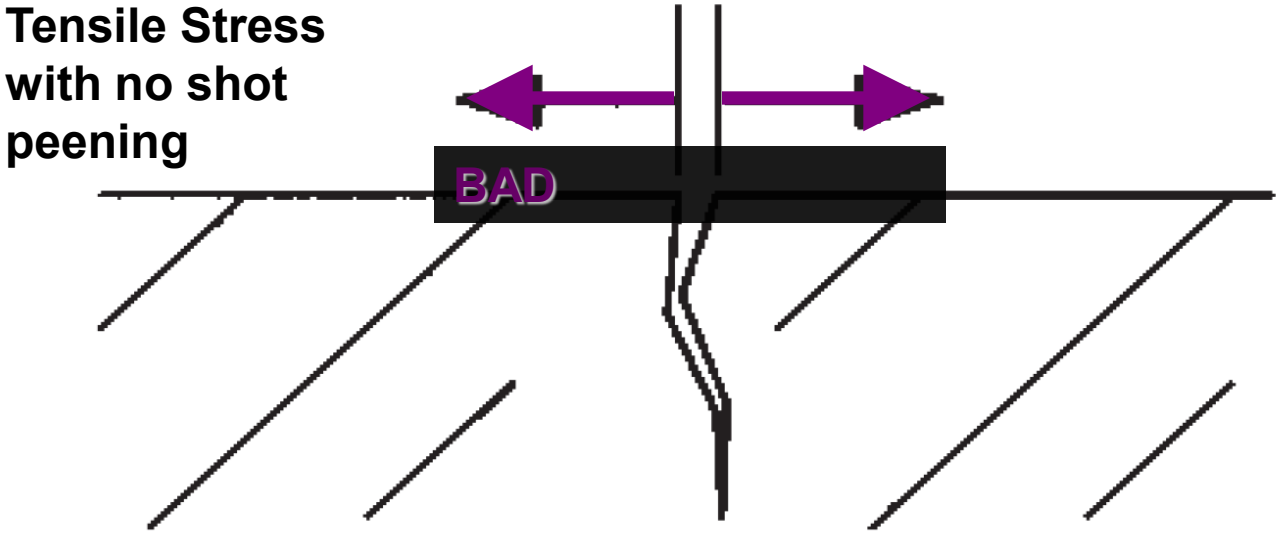
Tensile Stress
with no shot
peening
BAD

Mitigating Weld Practice

- Weld overlays can provide an excellent deterrent to IGSCC by producing a new corrosion-resistant pressure boundary on the outside surface of the piping component.
- The duplex microstructure created by Type 308L carbon steel weld metal overlay makes it far more resistant to IGSCC than the underlying sensitized base metal.

Mitigating Weld Practice

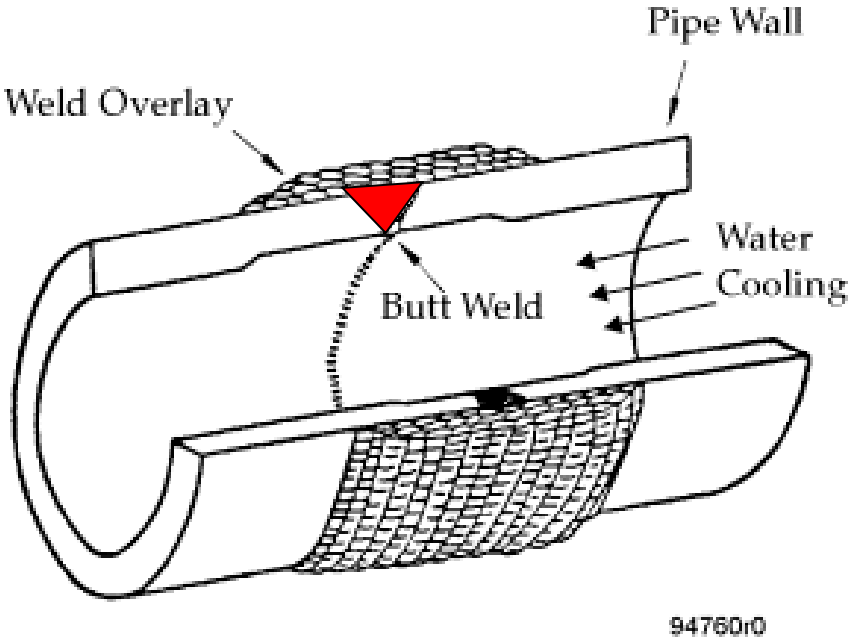

The Nuclear Regulatory Commission (NRC) has endorsed the use of weld overlays as a means of mitigating IGSCC in NUREG-0313, Revision 2.

Inspection Methods

- Visual Inspection (may require underwater camera)
  - Usually at outer diameter of shroud weld surfaces
- Ultrasonic Testing
  - Only feasible test method for some locations because of poor visibility or line of sight is blocked

Ultrasonic Testing

- High frequency ultrasonic (sound) energy is introduced and propagates through the material in the form of waves.
- When there is a discontinuity (such as a crack) in the wave path, part of the energy will be reflected back from the flaw surface.
- The reflected wave signal is transformed into an electrical signal by the transducer and is displayed on a screen.

Phased Array Ultrasonic Testing

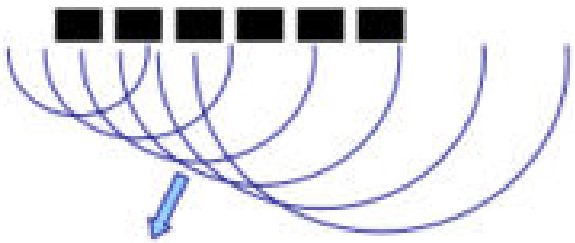

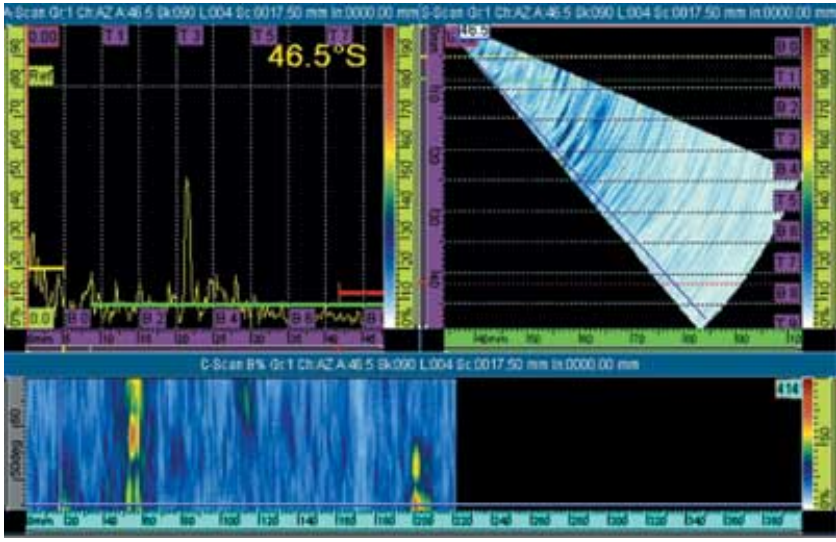

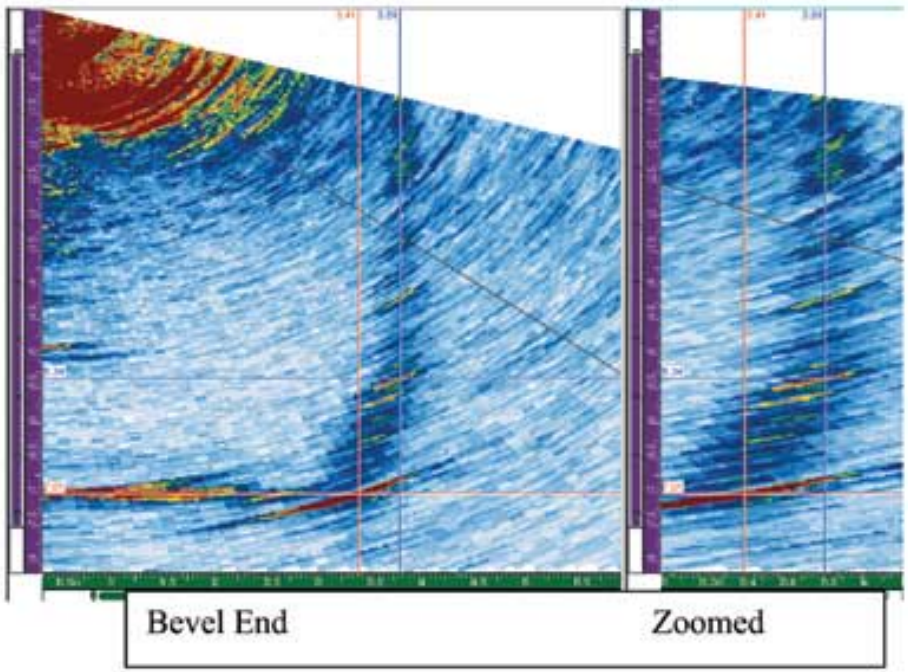

Pulses emitted in sequence to create a beam. The multiple waves add up to one single wave front travelling at a set angle. The beam angle can be set just by programming the pulse timings. A flaw in the weld appears as a red indication on the instrument screen.

Objectives

1. Recognize the potential consequences of component failures caused by intergranular stress corrosion cracking (IGSCC) both during normal operation and accident conditions.
2. Recognize the mechanism for IGSCC and the conditions that make IGSCC more likely.

Objectives

3. Identify the primary strategies used by licensees to limit the likelihood of IGSCC and ensure adequate system reliability and component integrity.
4. Recognize the factors used to establish a susceptibility ranking to shroud cracking.
5. Identify the inspection methods used to detect degradation from IGSCC.