ALSTON&BIRD LLP

TO: Eric T. Jameson
Georgia Department of Natural Resources
Radioactive Materials Program

FROM: Todd M. Hess
Attorney for Yokogawa Corporation of America

DATE: February 9, 2012

RE: Design Changes to WG31B1 and WG41B1
A&B Matter No. 048546/387545

Dear Eric:

The purpose of this memorandum is to advise you of certain design changes that have been proposed for the model WG31B1 and WG41B1 beta ray sensor for which a draft of the Sealed Source and Device registration certificate has been issued by the Georgia Department of Natural Resources, Radioactive Materials Program ("Agency").

Our detailed internal review of these proposed changes lead us to the conclusion that none of the changes in any way affect and in some cases improve the safety and reliability of the device or the conditions identified in the draft registration certificate under which the device may operate. We have enclosed, for your review, a description of each of the design changes seeking your concurrence of our opinion that no amendments will be needed.

## LAYOUT OF BUTTONS AND SWITCHES ON FRAMES

Changes to B-Stand

As illustrated in Figures 1 and 2, the FORWARD and BACKWARD buttons that manually control the movement of the sensor along the stand and the LOCAL/REMOTE button that selects whether the sensor is controlled locally or via a remote station have been relocated to inside the b-stand to prevent the possibility of activation from outside the stand.

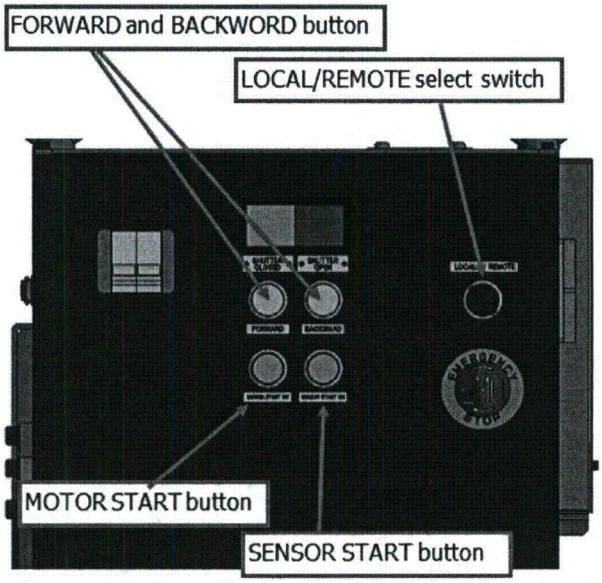


**Figure 1. Current design of buttons and switches on b-stand.**

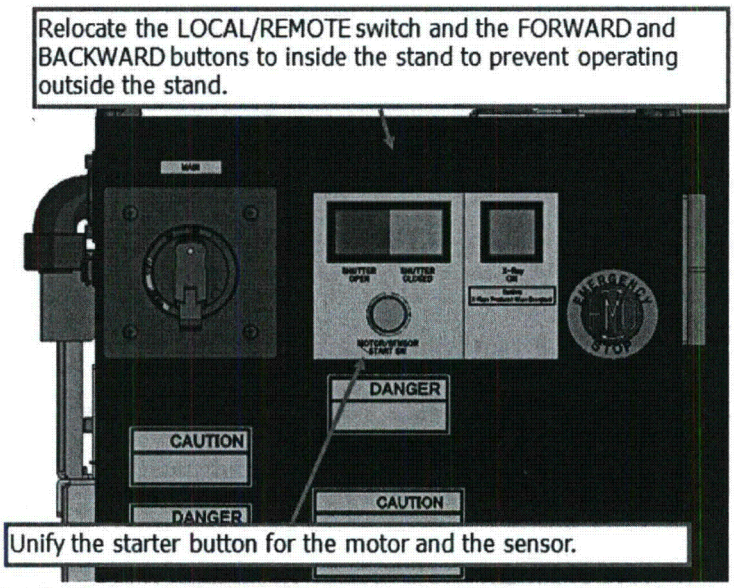


**Figure 2. Proposed design of buttons and switches on b-stand.**

Also, we propose merging the motor and sensor start operations into one button. Activation of the button will cause power to be supplied to the motor for moving the sensor across the frame and to the sensor enabling the sensor to start.

Changes to F-Stand

As illustrated in Figures 3 and 4, the SCAN command button has been removed from the f-stand. Under this revision, the sensor cannot be placed into SCAN mode from the f-stand. Rather, the sensor may be placed into SCAN mode only by executing the SCAN command from the remote station or through some other external signal input.


**Figure 3. Current design of buttons and switches on f-stand.**

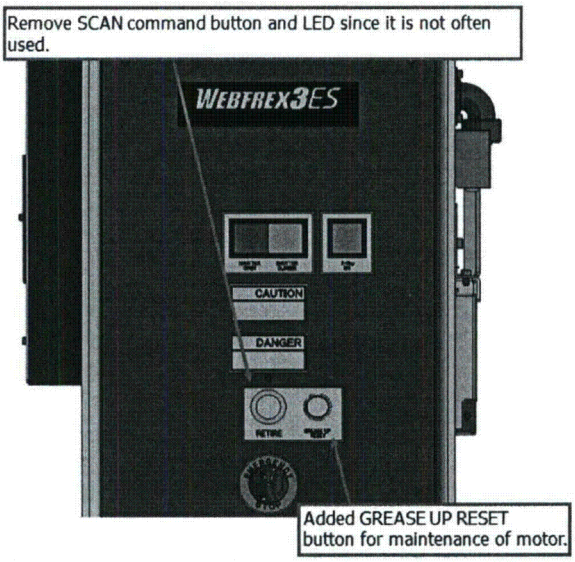


**Figure 4. Proposed design of buttons and switches on f-stand.**

Additionally, a GREASE UP RESET button has been added to reset the clock for counting down the time for when the main shaft bearings require greasing.

As shown in Figures 5 and 6, the keyswitches for bypassing the interlocks that disable power to the unit forcing the shutter to the closed position in the event a cover is lifted have been provided with covers.

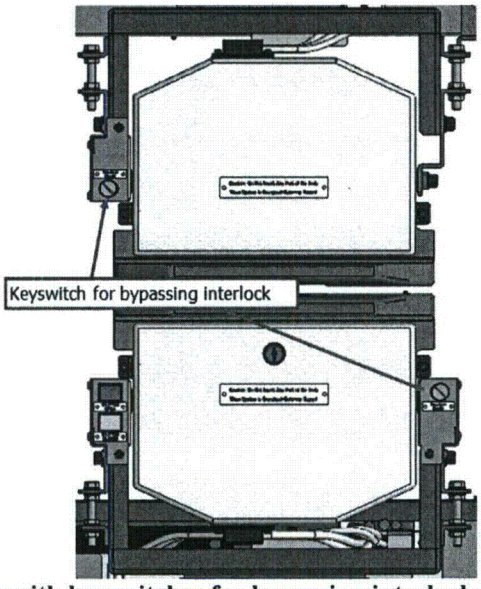


**Figure 5. Current design with keyswitches for bypassing interlocks without covers.**

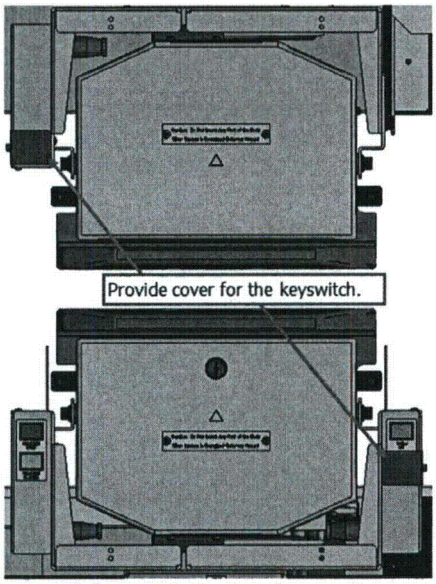


**Figure 6. Proposed design with keyswitches for bypassing interlocks covered.**

## METHOD OF LOCKING B-STAND COVER

Figures 7 and 8 illustrate the current and proposed designs for locking the b-stand cover. Currently, the b-stand is equipped with a keylock for locking the cover and a keyswitch for bypassing the interlock. In the event the b-stand cover is opened, the interlock disables the main power so that access into the b-stand is safe and the shutter is forced to the closed position.

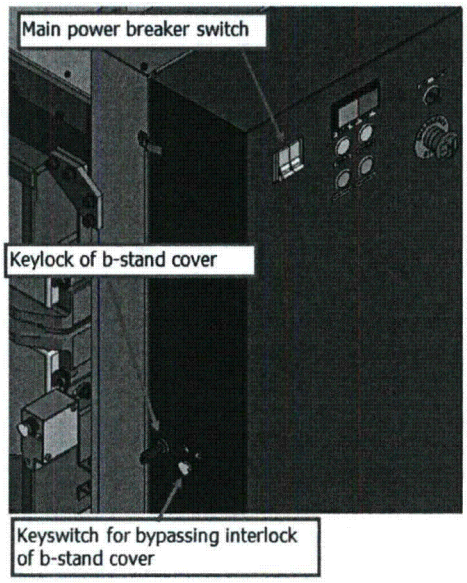


**Figure 7. Current design of method for locking b-stand cover.**

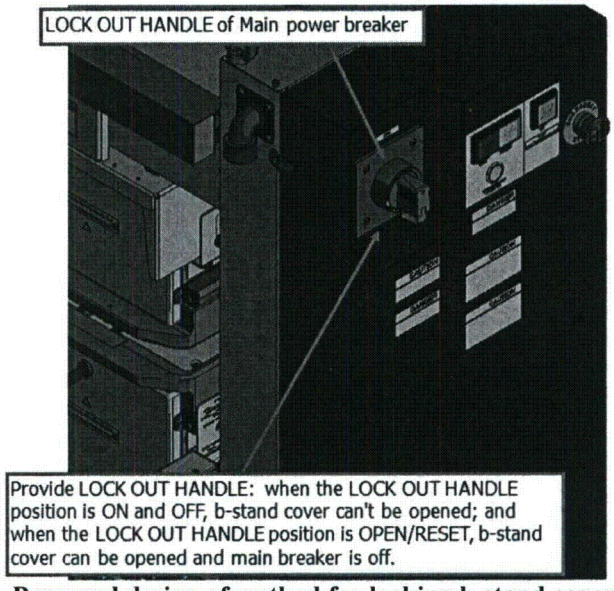


**Figure 8. Proposed design of method for locking b-stand cover.**

The mechanical detail for and the operation of the proposed lockout handle on the b-stand cover is provided in Figure 9. According to the proposed design, the keylock and keyswitch have been replaced with a lock out handle for the main power breaker. If the lock out handle is in the ON or the OFF position, the b-stand cover cannot be opened. However, if the lock out handle is set to the OPEN/RESET position, then the b-stand cover can be opened and the main breaker is set to OFF.

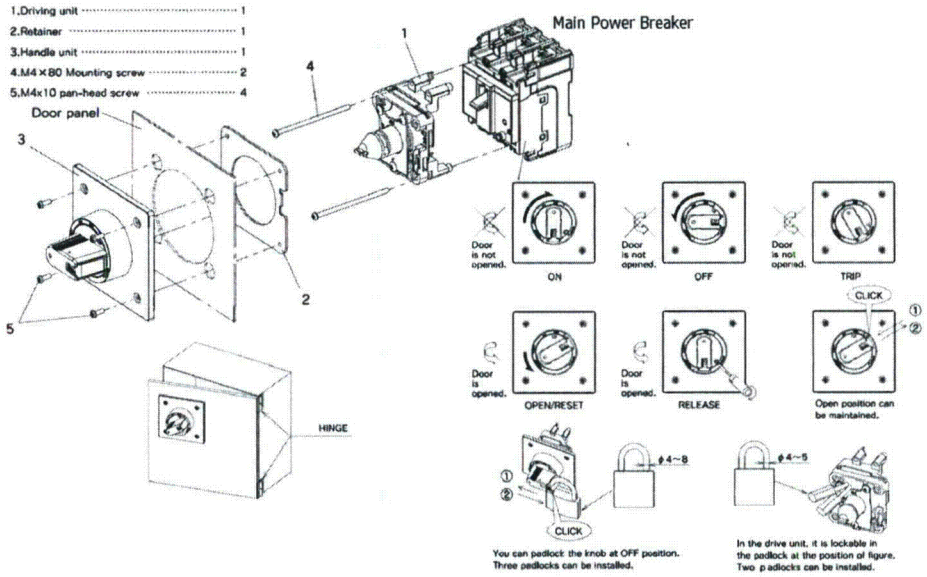


**Figure 9. Mechanical design and operation of proposed lockout handle.**

## METHOD FOR ATTACHING LABELS

As shown in Figure 10, labels are currently affixed by the use of M3 screws. As shown in Figure 11, it is now proposed that the labels for lamps and buttons will be attached by the use of the casing trim of the lamp and/or button.

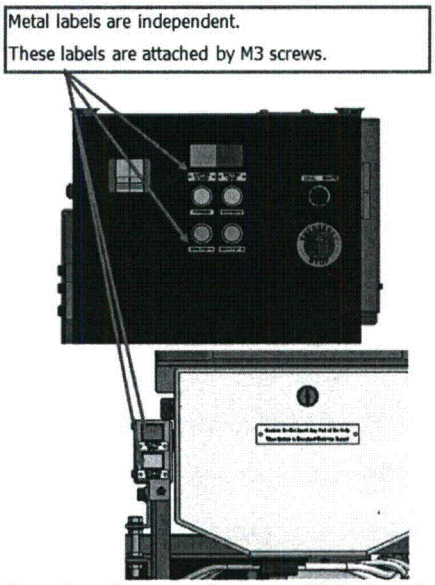


**Figure 10. Current design showing attachment of labels using M3 screws.**

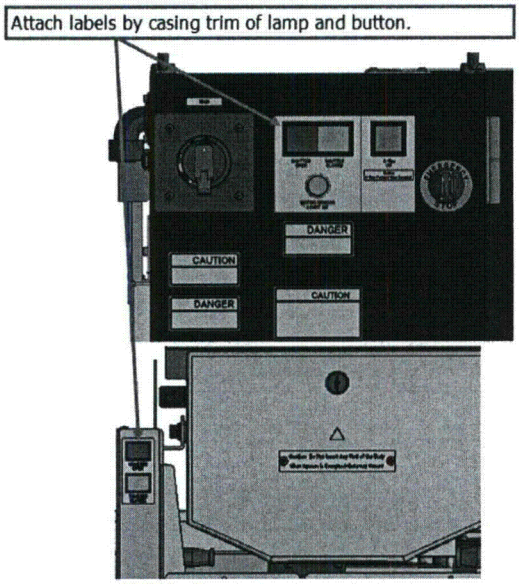


**Figure 11. Proposed design showing attachment of labels using the casing trim of lamps and/or buttons.**

Figure 12 provides the mechanical detail for how the casing trim of the lamps and buttons are affixed to the device.

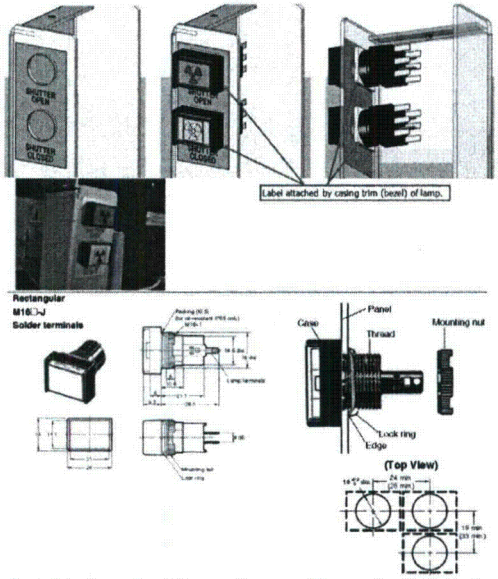


**Figure 12. Mechanical detail showing how the casing trim is affixed to the device.**

## UNIFORM BRACKET ASSEMBLY AND STREAMLINED LAMP AND KEY BOXES

Uniform Bracket Assembly for Affixing Case Cover to Sensor Case

As shown in Figure 13, the covers are affixed to the sensor case using independent brackets. As shown in Figure 14, the proposed design adopts a uniform bracket to which the covers will become affixed.

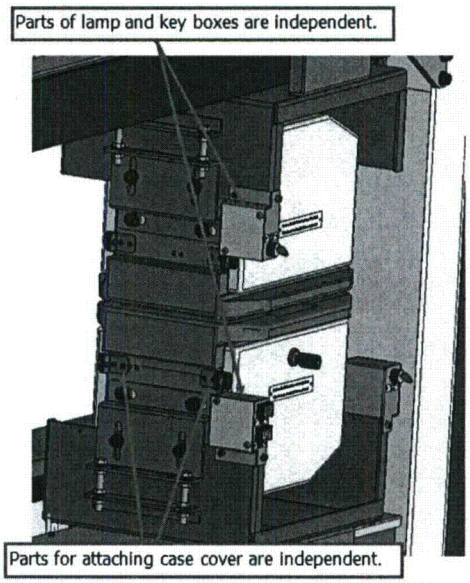


**Figure 13. Current design of brackets and lamp and key boxes.**

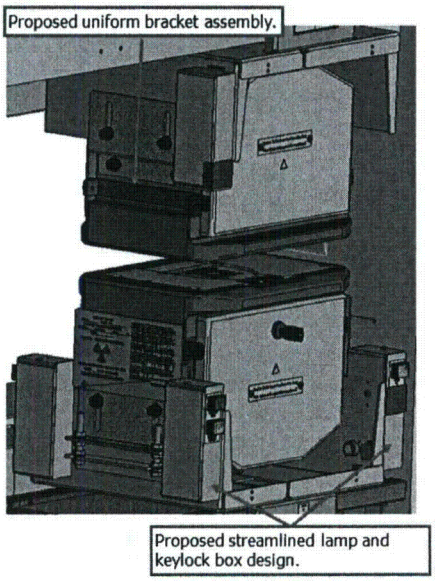


**Figure 14. Proposed design of uniform bracket assembly and lamp and key boxes.**

Streamlined Lamp and Key Box Design

It is proposed that a more streamlined design of the lamp and key boxes be adopted. The new streamlined box design has a more integrated design that is better situated in the overall footprint of the device. The new design also simplifies access to the box when needed for component replacement.

Figures 13 and 14 highlight the differences between the design of the current boxes and the proposed streamline design, respectively.

cc: Margaret Barfield, Esq.
Takashi Sasaki-san
Nobuya Horiguchi-san

TMH:mrh