UNITED STATES
NUCLEAR REGULATORY COMMISSION
REGION IV
1600 E LAMAR BLVD
ARLINGTON, TX 76011-4511

May 9, 2014

EA 14-008

Jeremy Browning, Site Vice President
Arkansas Nuclear One
Entergy Operations, Inc.
1448 SR 333
Russellville, AR 72802-0967

SUBJECT: SUMMARY OF REGULATORY CONFERENCE TO DISCUSS SAFETY SIGNIFICANCE OF ARKANSAS NUCLEAR ONE UNIT 1 DROPPED STATOR

Dear Mr. Browning:

On May 1, 2014, members of the U.S. Nuclear Regulatory Commission (NRC) staff met with representatives of the Arkansas Nuclear One facility to discuss the apparent violation affecting both units related to the drop of the Unit 1 main generator stator as documented in NRC Inspection Report 05000313;368/2013012, issued on March 24, 2014 (ML14083A409). The focus of the regulatory conference was a discussion on the safety significance of the finding. The discussion included Unit 1 mitigating actions focusing on the use of temporary power to recover the electrical buses and Unit 2 procedural electrical power recovery actions.

For Unit 1, three non-proceduralized and non-engineered success paths associated with recovery of electrical power were discussed, with the variation of Success Path 1 being actually used, after the event, to restore power to the vital buses within 6 days. Your staff indicated that this power was available for use within 4.4 days and could have been used in an emergency. The delay on re-energizing the vital buses with offsite power was based on completing and approving the engineering, installation, and operating procedures documentation. The three success paths all had estimated times to being available to re-energize the electrical buses of 60 hours or less. This information was discussed during your presentation on Slides 15 – 35. Your staff also discussed other recovery actions. Based on credit for the recovery options, your staff estimated the conditional core damage probability of 5.5E-6.

For Unit 2, the focus was on procedurally directed electrical power recovery strategies. This information was discussed during your presentation on Slides 81 – 86. Based on these recovery options, your staff estimated the conditional core damage probability of 1.8E-6.

The NRC staff asked questions during the Regulatory Conference, with some questions requiring additional information that you indicated you would supply to us by Friday, May 9. The NRC will continue to review the information that you provided during the Regulatory Conference and the

subsequent information that was requested in order to reach a final significance determination. We are developing our final risk significance and will issue a final significance determination letter in June.

A copy of your presentation slides is included as Enclosure 1. Copies of the NRC slides (Enclosure 2) and meeting attendance (Enclosures 3 and 4) are included.

This regulatory conference was transcribed, and a copy of the transcription will be made available and placed into the NRC's Agencywide Documents Access and Management System (ADAMS). This Category 1 public meeting was attended by 52 members of the public, both telephonically and in the Region IV office.

In accordance with 10 CFR 2.390 of the NRC's "Rules of Practice," a copy of this letter and its enclosures will be available electronically for public inspection in the NRC's Public Document Room or from the Publicly Available Records (PARS) component of the NRC's ADAMS. ADAMS is accessible from the NRC web site at http://www.nrc.gov/reading-rm/adams.html (The Public Electronic Reading Room).

Sincerely,

/RA/

Gregory E. Werner, Chief
Project Branch E
Division of Reactor Projects

Docket Nos.: 50-313, 50-368
License Nos.: DPR-51, NPF-6

Enclosures:
1. ANO Presentation Slides
2. NRC Slides
3. Meeting Attendance at Region IV
4. Meeting Attendance by Phone

Electronic distribution by RIV:
Regional Administrator (Marc.Dapas@nrc.gov)
Deputy Regional Administrator (Steven.Reynolds@nrc.gov)
DRP Director (Kriss.Kennedy@nrc.gov)
DRP Deputy Director (Troy.Pruett@nrc.gov)
DRS Director (Anton.Vegel@nrc.gov)
DRS Deputy Director (Jeff.Clark@nrc.gov)
Senior Resident Inspector (Brian.Tindell@nrc.gov)
Resident Inspector (Matt.Young@nrc.gov)
Resident Inspector (Abin.Fairbanks@nrc.gov)
Branch Chief, DRP/E (Greg.Werner@nrc.gov)
Senior Project Engineer, DRP/E (Michael.Bloodgood@nrc.gov)
Project Engineer, DRP/E (Jim.Melfi@nrc.gov)
ANO Administrative Assistant (Gloria.Hatfield@nrc.gov)
Public Affairs Officer (Victor.Dricks@nrc.gov)
Public Affairs Officer (Lara.Uselding@nrc.gov)
Project Manager (Peter.Bamford@nrc.gov)
Branch Chief, DRS/TSB (Geoff.Miller@nrc.gov)
ACES (R4Enforcement.Resource@nrc.gov)
RITS Coordinator (Marisa.Herrera@nrc.gov)
Regional Counsel (Karla.Fuller@nrc.gov)
Technical Support Assistant (Loretta.Williams@nrc.gov)
Congressional Affairs Officer (Jenny.Weil@nrc.gov)
RIV/ETA: OEDO (Joseph.Nick@nrc.gov)
ROPreports

DOCUMENT NAME: R:_Reactors\ANO\2014\ANO Meeting Summary.pdf

SUNSI Rev Compl.	☑Yes ☐ No	ADAMS	☑Yes ☐ No	Reviewer Initials	JFM1
Publicly Avail.	☑Yes ☐ No	Sensitive	☐Yes ☑ No	Sens. Type Initials	JFM1

PE:DRP/E	BC:DRP/E				
JMelfi	GWerner				
/RA/	/RA/				
5/7/14	5/8/14				

OFFICIAL RECORD COPY

Arkansas Nuclear One Regulatory Conference Stator Drop

May 1, 2014

Enclosure 1

Opening Comments

Jeremy Browning
ANO Site Vice-President

Opening Comments

- ANO and Entergy recognize the significance of the event
- Plant personnel took appropriate actions and plant mitigating systems performed as designed to protect the health and safety of the public
- Entergy concurs with the performance deficiency
- Independent root cause evaluations performed
- Effective corrective actions to prevent re-occurrence were taken addressing the root causes, contributing causes, extent of condition and extent of cause
- Entergy understands its responsibility for the oversight of vendor performance
- We appreciate the opportunity to share additional information that improves the accuracy of the estimated risk following the event

Entergy

Agenda

- Unit 1
  - Response
  - Recovery Actions
  - Significance Determinations
- Break
- Unit 2
  - Response
  - Recovery Actions
  - Significance Determinations
- Site Actions and Common Cause
- Fleet Learnings
- Closing Comments

Entergy

Unit 1 Overview

- Focus on NRC event tree
  - 4160VAC power recovery
  - Inventory control recovery
- Provide a basis that the probability of failure to recover is not 1.0 as assumed by the NRC analysis
- Discuss three success paths for the reestablishment of 4160VAC power
- Discuss a separate success path for inventory makeup to the reactor coolant system
- Apply risk modeling techniques to provide best estimate of actual plant risk

Entergy

ANO Unit 1 Response and Recovery

Gary Sullins
Unit 1 Manager – Shift Operations
David McKenney
Engineering Supervisor

Initial Conditions

- Day 7 of Refueling Outage
- Fuel transfer canal flooded
  - 12 hour time to boil
  - 115 hour (4.8 day) time to core uncovery
- Power distribution supplying vital switchgear is unavailable
  - Distribution from Startup Transformers (SU1 and SU2)
  - Supply from Alternate AC Diesel Generator (AACDG)
- Vital switchgear unaffected
- 480VAC Offsite Power remained available in Power Block throughout the event from local distribution (London Line)

Emergency Response

- Emergency Response Organization activated immediately following event
  - Outage Control Center organization transitions into Technical Support Center
  - Emergency Operations Facility (EOF) manned and focused on obtaining offsite support
    - Equipment
    - Resources

Human Resources

Approximate number of key departmental personnel (including contract personnel supporting a department) available on site on the day of the event:

CRAFT	295 (including 45 electrical craft)
ENGINEERING	40 (not including contractors)
OPERATIONS	60

Per Shift Numbers

Entergy

NRC Event Tree – Unit 1

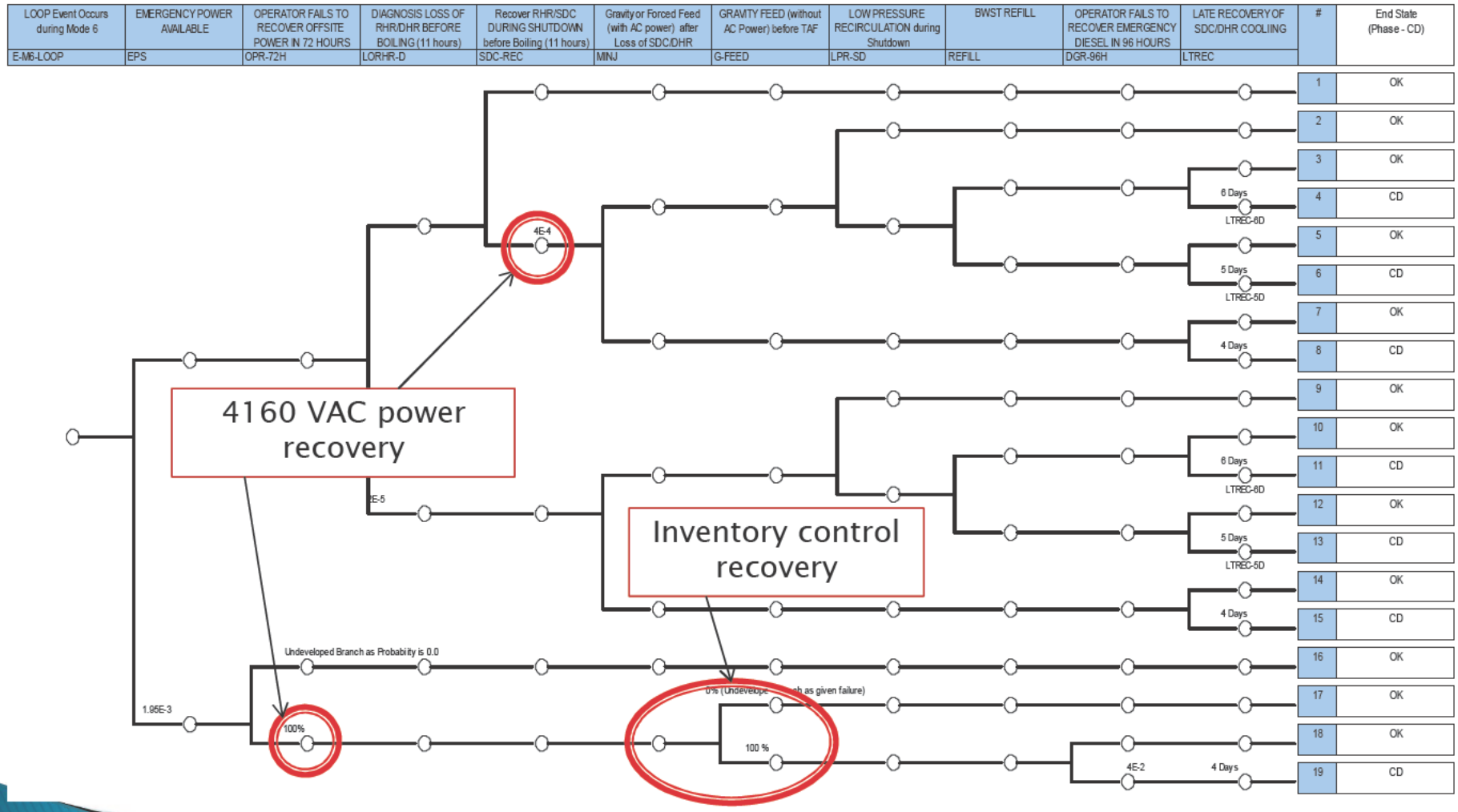

Entergy®

Enclosure 1

Basis for Unit 1 Recovery Actions

- Provide basis for core cooling success paths if emergency diesel generator (EDG) failed (dominant cut set)
  - Three success paths to recover 4160VAC Power Source(s) were developed as part of event response
    - Cable from Startup 1 Transformer (SU1)
    - Cable from Alternate AC Diesel Generator Breaker
    - Cable from Unit 2 Non-Vital Switchgear
  - One Success Path for 480VAC power cables for Reactor Coolant System (RCS) Makeup
- All actions consistent with and less complex than demonstrated recovery actions

Entergy

Unit 1 Response

- Priorities Dictated by Actual Plant Conditions
  - Actual Plant Conditions
    - Unit 1 in a stable condition
    - Redundant trains available for decay heat removal
  - Priorities
    - Avoid challenges to available power sources
    - Protect Decay Heat Removal (DHR) and support systems
    - Protect Spent Fuel Pool (SFP) Cooling
    - Minimize potential for personnel injury
    - Optimize temporary configurations for future electrical recovery actions

Entergy

Unit 1 Post Event Response

- Restored DHR within 5 minutes
- Restored SFP cooling with less than 3 degree temperature rise
- Reliably operated both EDGs and both trains of DHR
- Recovery path chosen for 4160VAC offsite power recovery based on both vital trains in service and > 300,000 gallons of water in refueling canal
  - Provided offsite power capability to 4160VAC vital busses in 4.4 days
    - Design featured flexibility for operation and accommodations for turbine building repairs
  - Demonstrated source of offsite power placed in service in 6 days
- Additional simple contingency actions were being developed had power further degraded

Entergy

Unit 1 Pre-Event Response

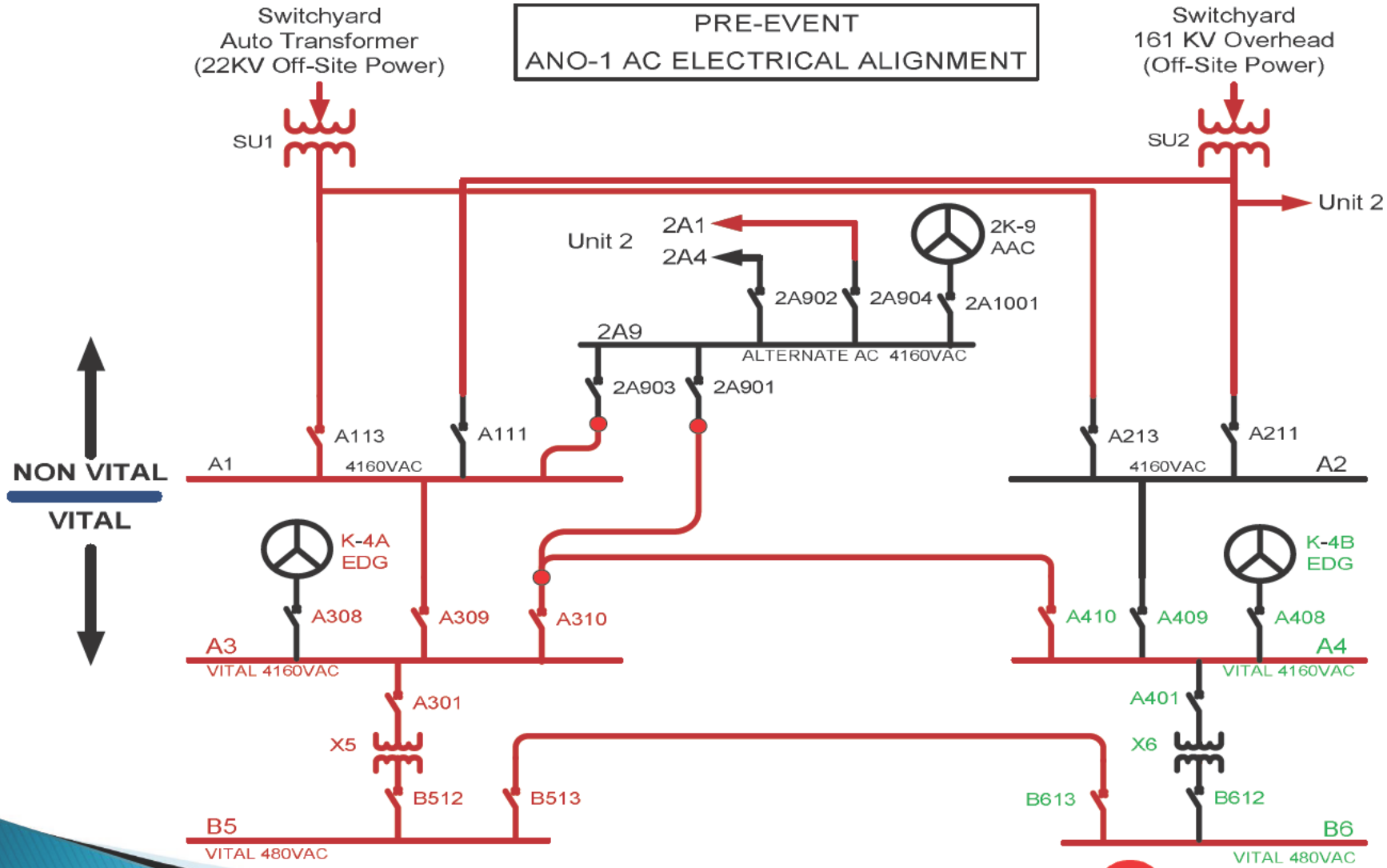

Entergy

Enclosure 1

Unit 1 Post Event Response

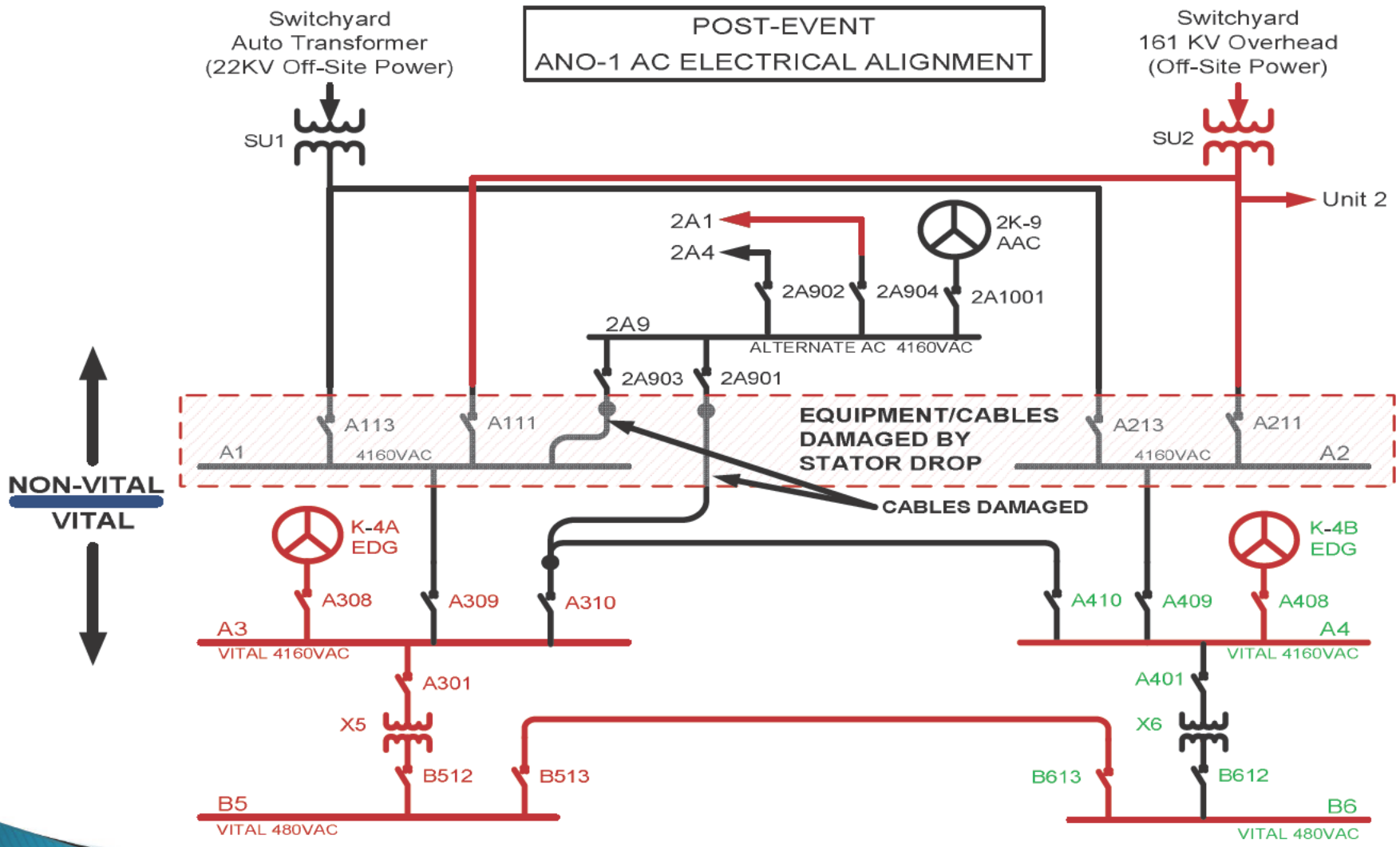

Entergy

Enclosure 1

Demonstrated Success –Provided 4160VAC From Offsite Unit 1 Transformer to Unit 1 Vital Switchgear

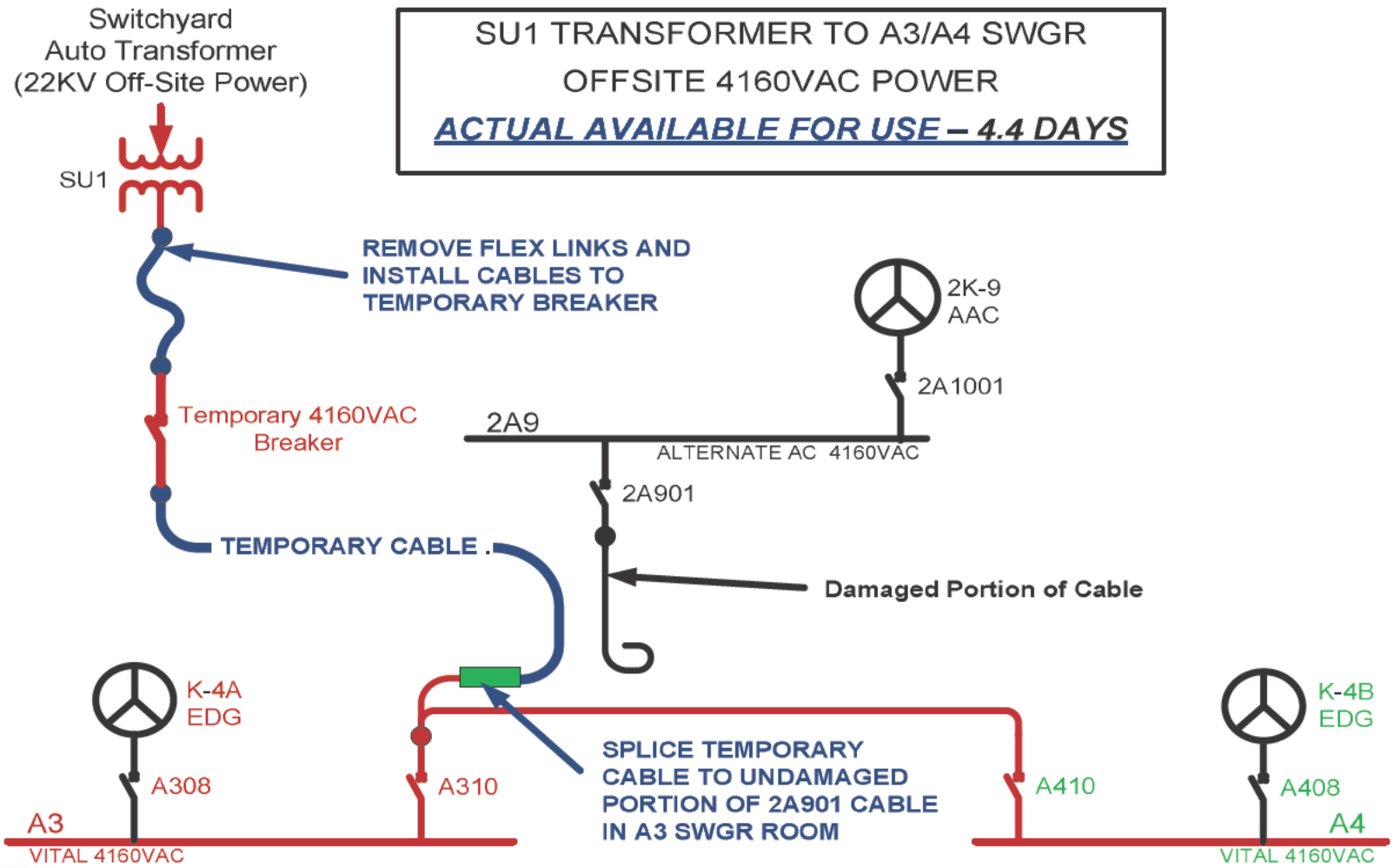

Entergy

Enclosure 1

Demonstrated Success –Provided 4160VAC From Offsite Unit 1 Transformer to Unit 1 Vital Switchgear

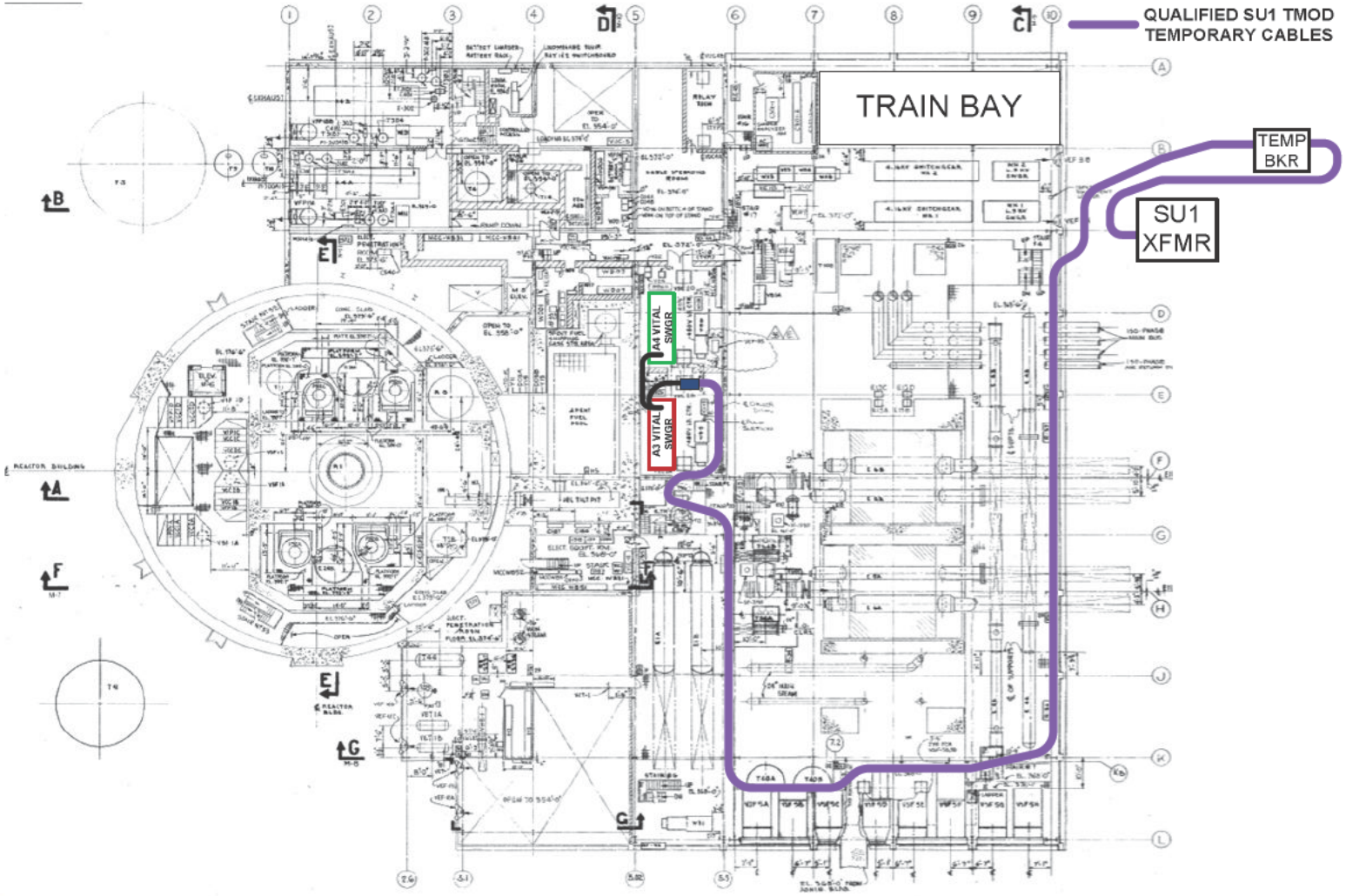

Entergy

Enclosure 1

Demonstrated Success –Provided 4160VAC From Offsite Unit 1 Transformer to Unit 1 Vital Switchgear

- Temporary breaker supplying power to vital switchgear from SU1 transformer

Entergy

Demonstrated Success –Provided 4160VAC From Offsite Unit 1 Transformer to Unit 1 Vital Switchgear

	SU1 Source (Actual Installation Time)
	7*50=350 feet of cable routing
	7*500=3500 feet of cable routing
	28 splices/terminations – 4160VAC
	Modify SWGR Room Door
	Seismic Cable Support
	Temporary 4160VAC Breaker
	DC control for Temp Breaker
	Temporary Breaker Setup & Testing
	106 Hours (4.4 Days)

Entergy

Implementation Process

- Temporary Electrical Power
  - Recovery team was continuously investigating additional options
  - Additional on-site 4160VAC sources were considered and scope of work determined
  - Technical Support /Outage Control Center considered options
  - Additional technical support onsite
  - Implementation would have been controlled by
    - EN-DC-136 "Temporary Modifications"
    - EN-WM-102 "Work Implementation and Closeout"

Entergy

Implementation Process

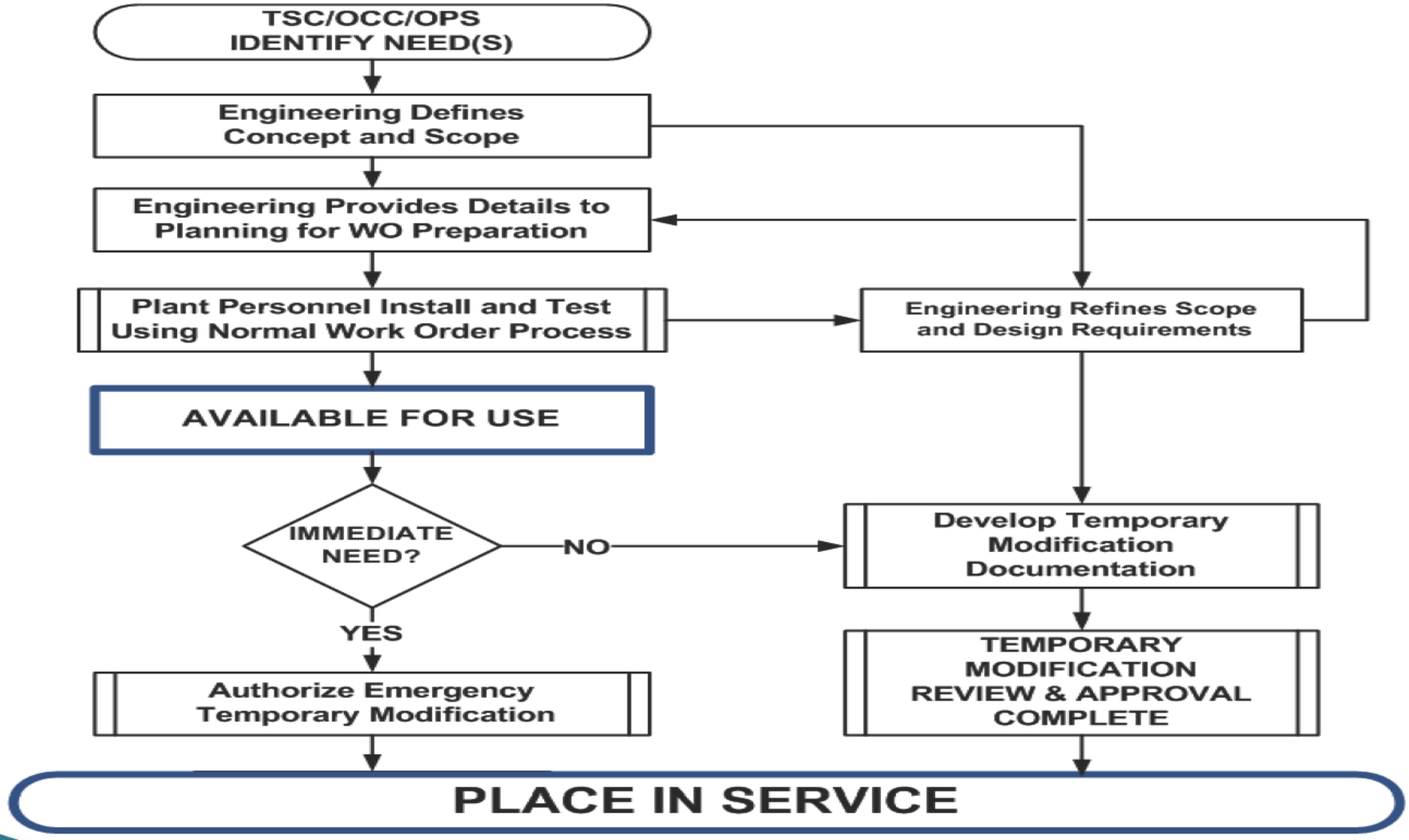

Enclosure 1

Demonstrated Success – SU1 Source

- Restored Off Site Power to Vital Switchgear
  - Craft personnel were qualified and scheduled to perform the same type activities in outage when replacing circulating water pump 4160VAC cables
  - Cable routed away from recovery zone
  - Provided option to tie either or both trains of vital power to SU1
  - Allowed the EDGs to remain available to feed their respective train
  - Available in 4.4 days

Entergy

Contingent Success Paths

- Three Alternate 4160VAC Power Source(s) Success Paths
  1. Cable from Startup 1 Transformer (SU1)
  2. Cable from Alternate AC Diesel Generator breaker
  3. Cable from Unit 2 Non-Vital Switchgear (Condensate Pump Supply)

- Estimated installation completion times for these success paths based on the actual installation of demonstrated 4160VAC power source
  - Adjustments made to reflect reduced work scope

Entergy

Success Path 1 – Cable From Offsite SU1 Transformer

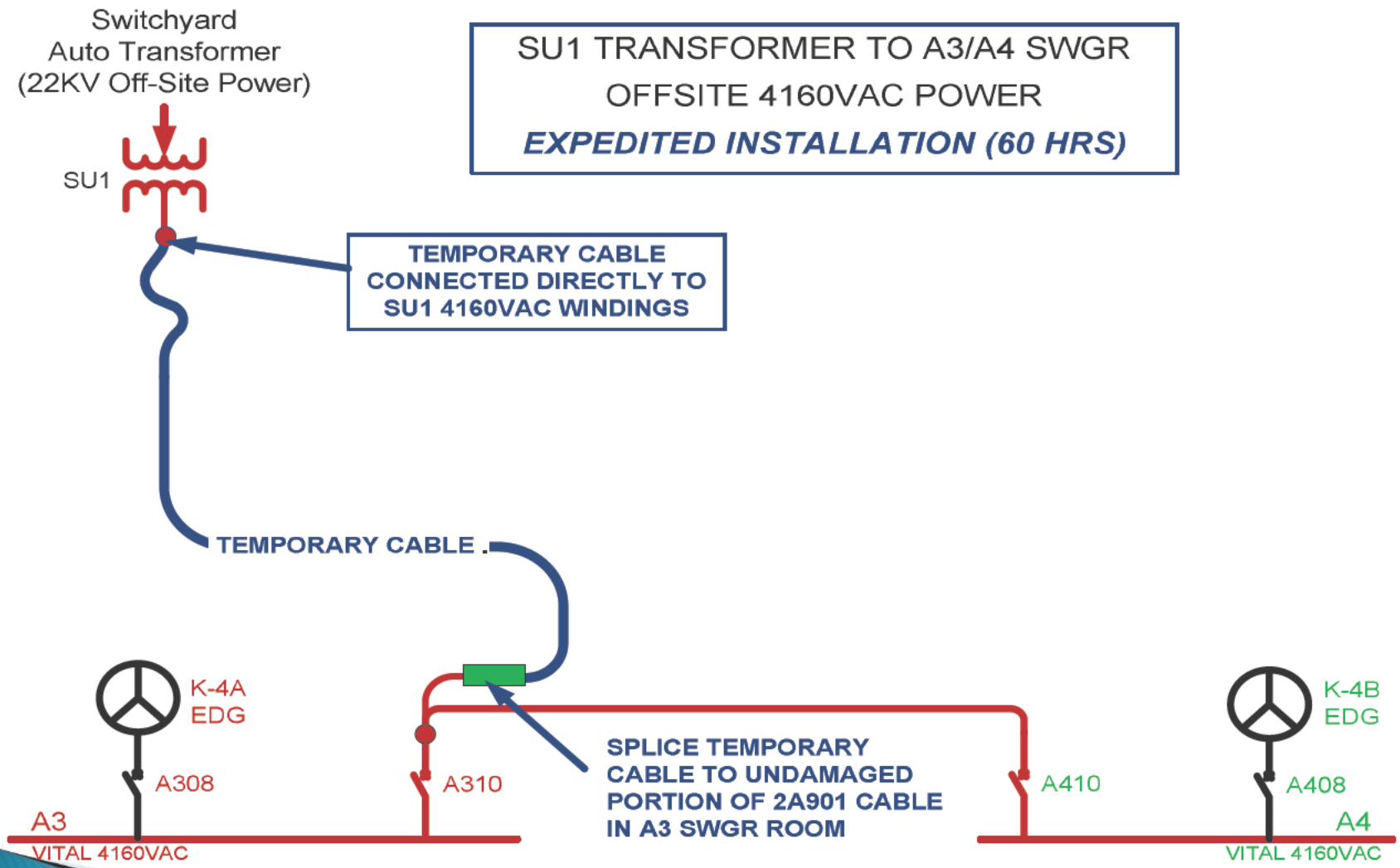

Entergy

Enclosure 1

Success Path 1 – Cable From Offsite SU1 Transformer

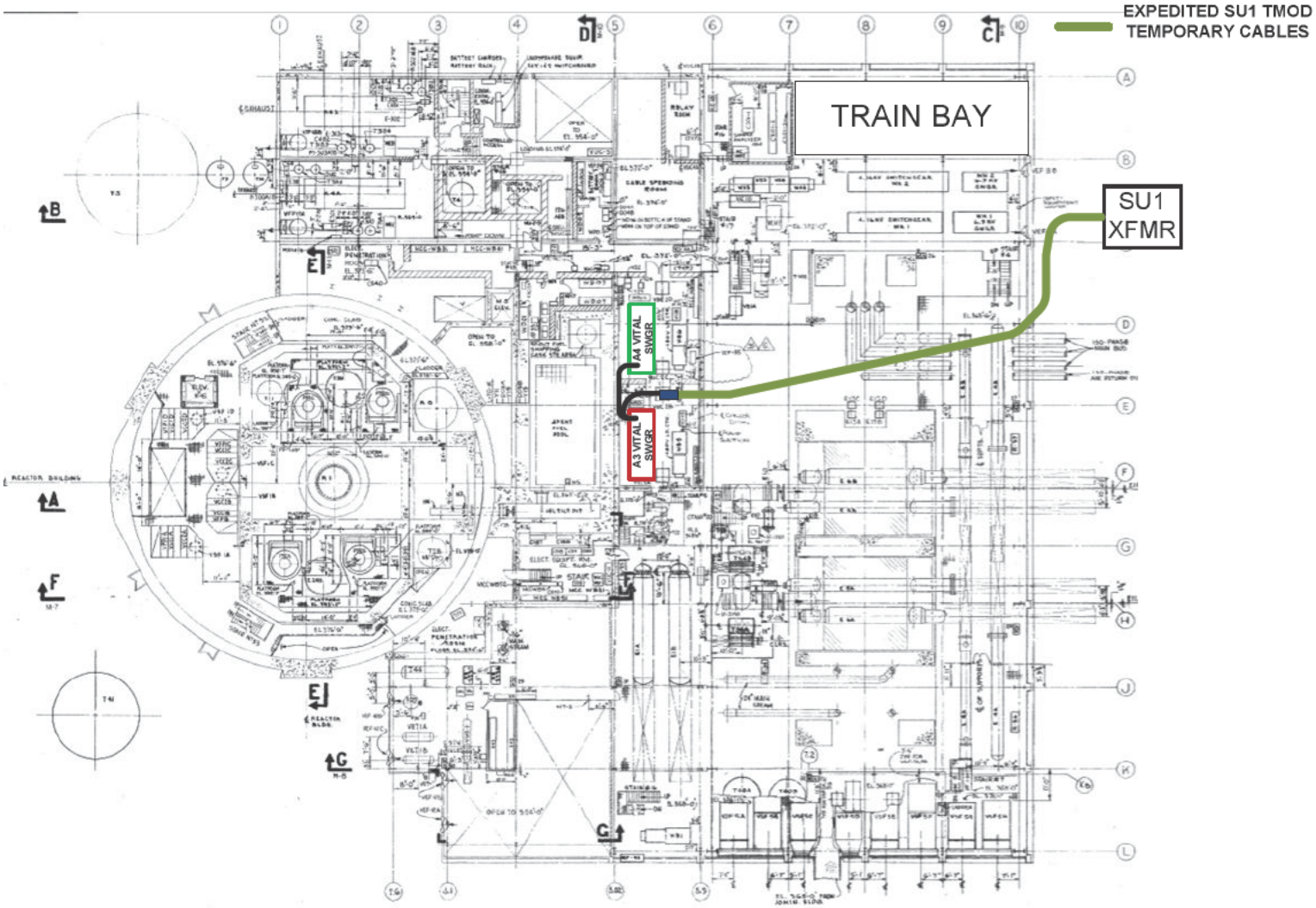

Entergy

Enclosure 1

Success Path 1 – Cable From Offsite SU1 Transformer

SU1 Supply to Vital 4160 VAC – Expedited **vs.** Demonstrated Source

SU1 Expedited Installation	SU1 Source (as installed)
7*250=1750 feet of cable routing	7*500=3500 feet of cable routing
	7*50=350 feet of cable routing
14 splices/terminations – 4160V	28 splices/terminations – 4160V
	Modify SWGR Room Door
	Seismic Cable Support
	Temporary 4160 VAC Breaker
	DC control for Temp Breaker
	Temporary Breaker Setup & Testing
60 Hours	106 Hours

Entergy

Success Path 2 – Alternate AC Diesel Generator

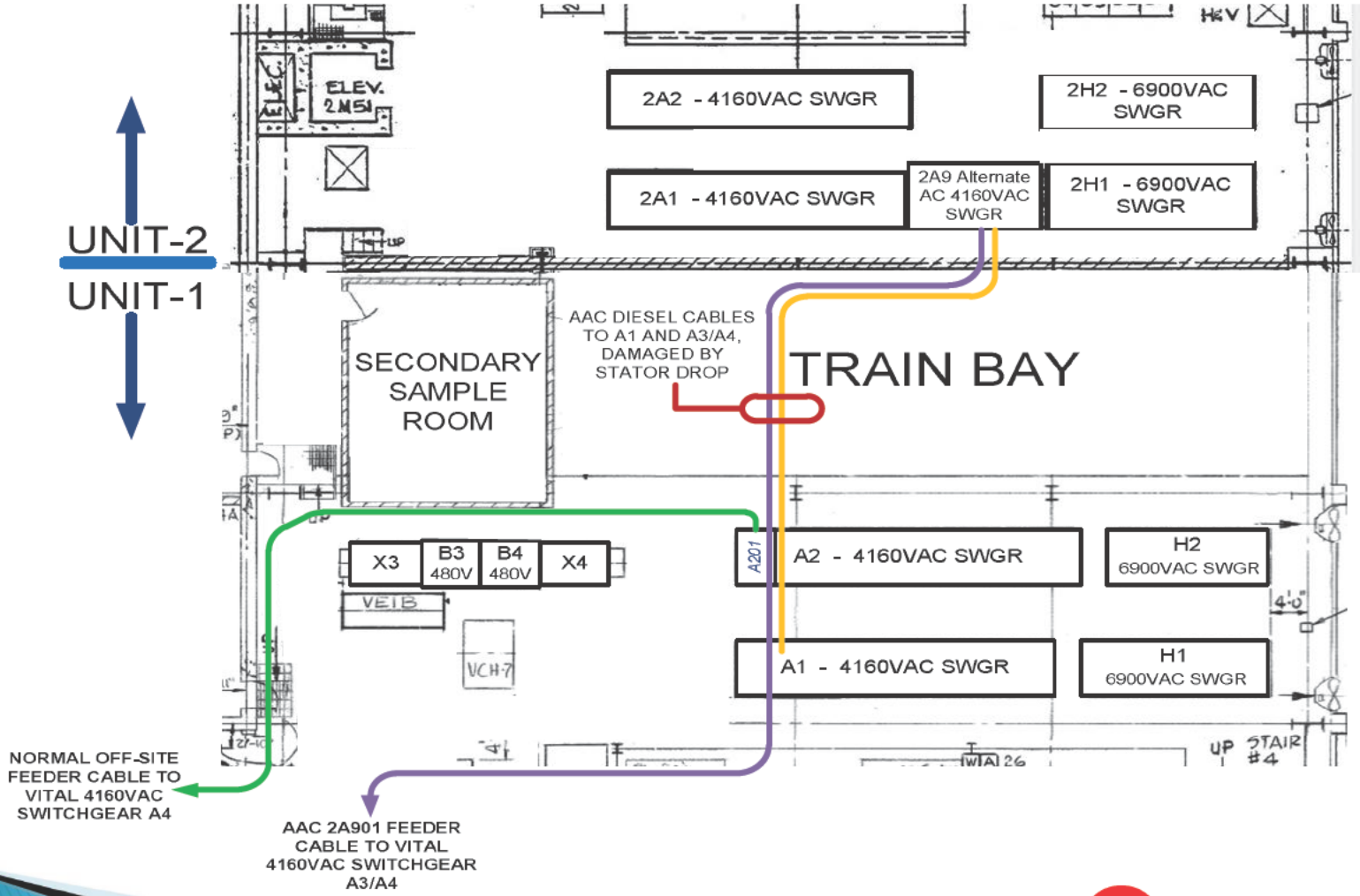

Entergy

Enclosure 1

Success Path 2 – Alternate AC Diesel Generator

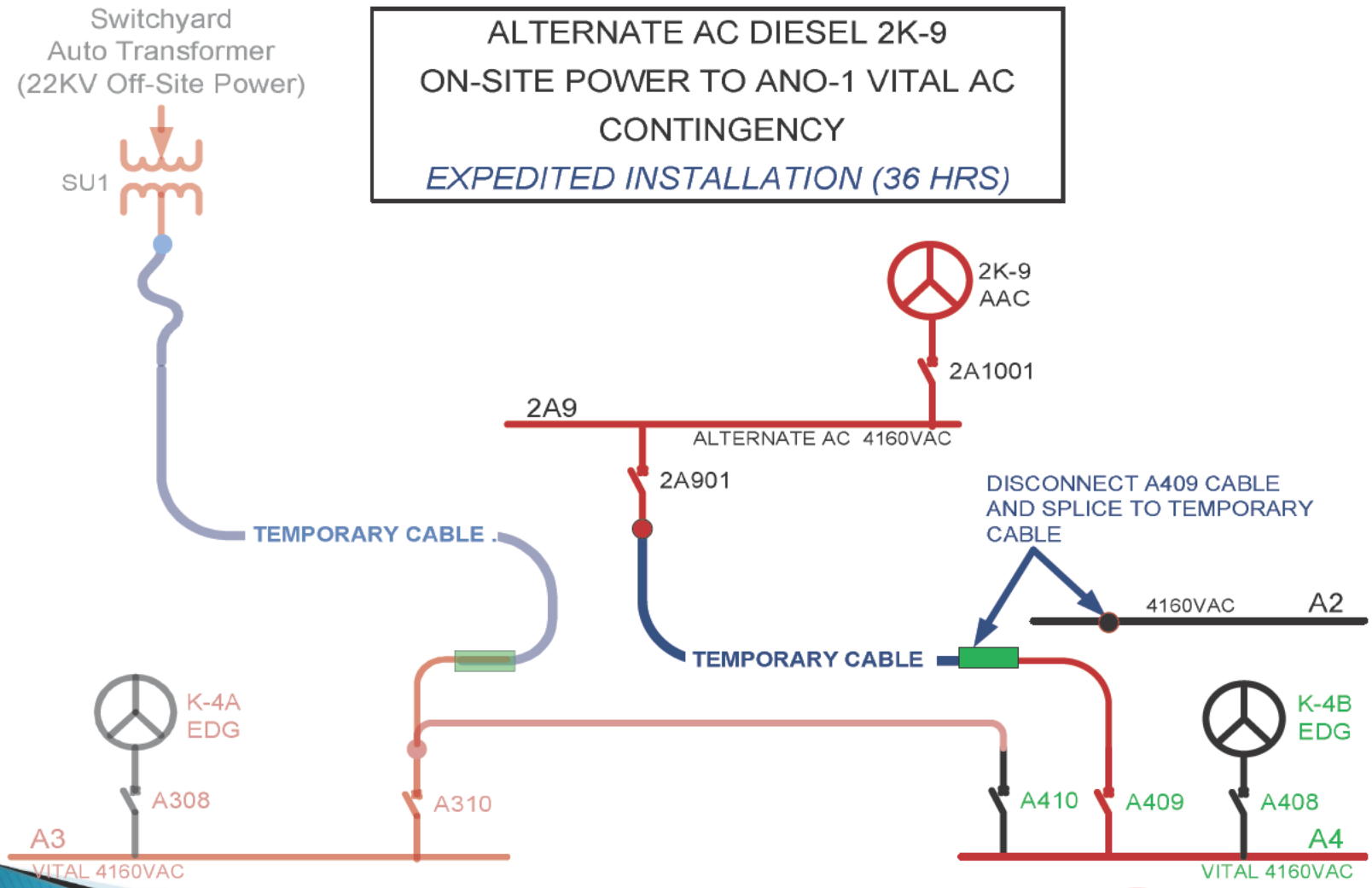

Entergy

Enclosure 1

Success Path 2 – Alternate AC Diesel Generator

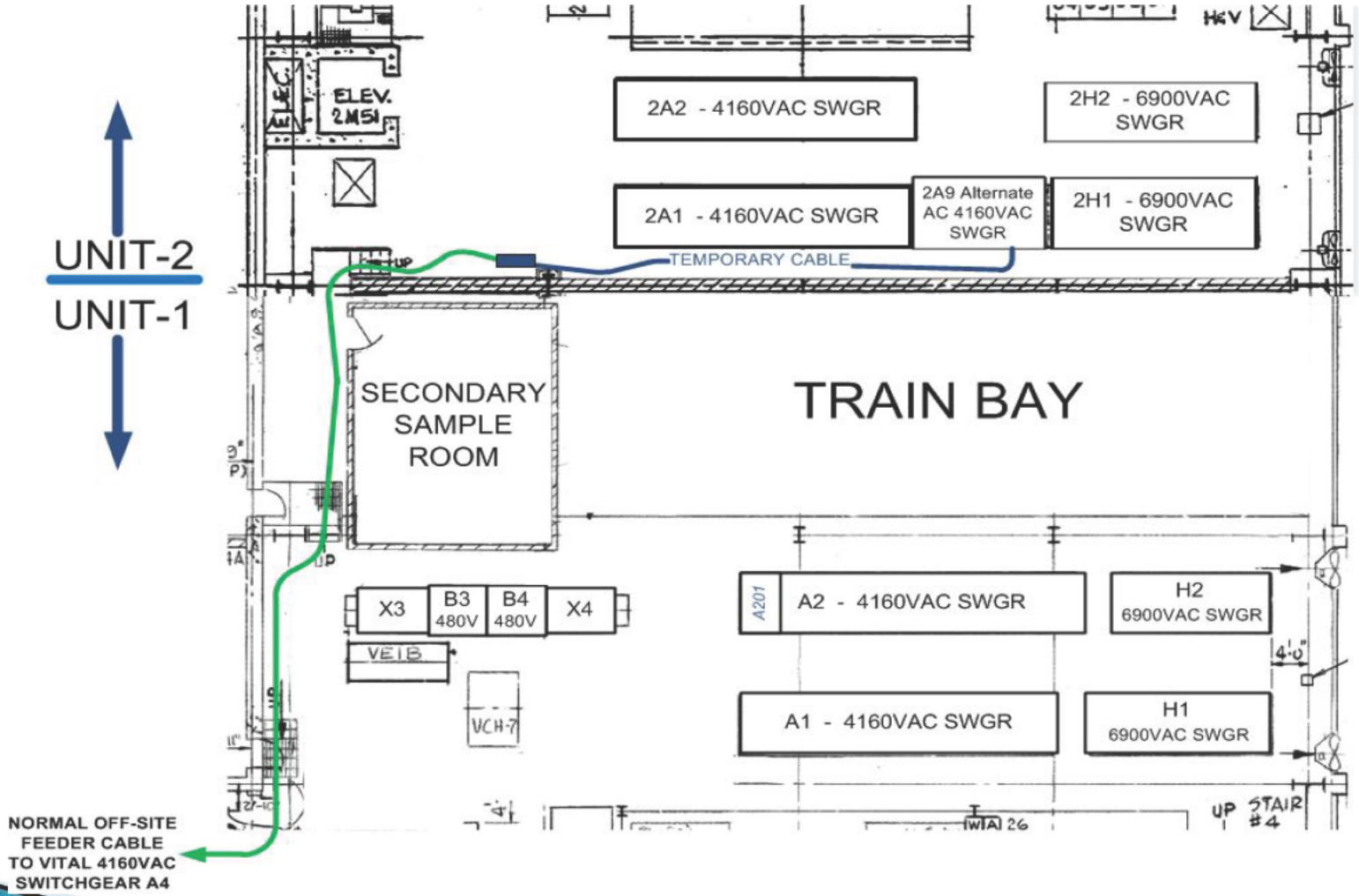

Entergy

Enclosure 1

Success Path 2 – Alternate AC Diesel Generator

AAC DG to Vital 4160VAC **vs**. SU1 to Vital 4160VAC Demonstrated Source

AAC DG to ANO-1 Vital 4160 VAC	SU1 Source (as installed)
7*100=700 feet of cable routing	7*500=3500 feet of cable routing
	7*50=350 feet of cable routing
14 splices/terminations – 4160V	28 splices/terminations – 4160V
	Modify SWGR Room Door
	Seismic Cable Support
	Temporary 4160 VAC Breaker
	DC control for Temp Breaker
	Temporary Breaker Setup & Testing
Minor 2A901 Term Point Repairs	
36 Hours	106 Hours

Entergy

Success Path 3 – Cable From Unit 2 Non-Vital Switchgear

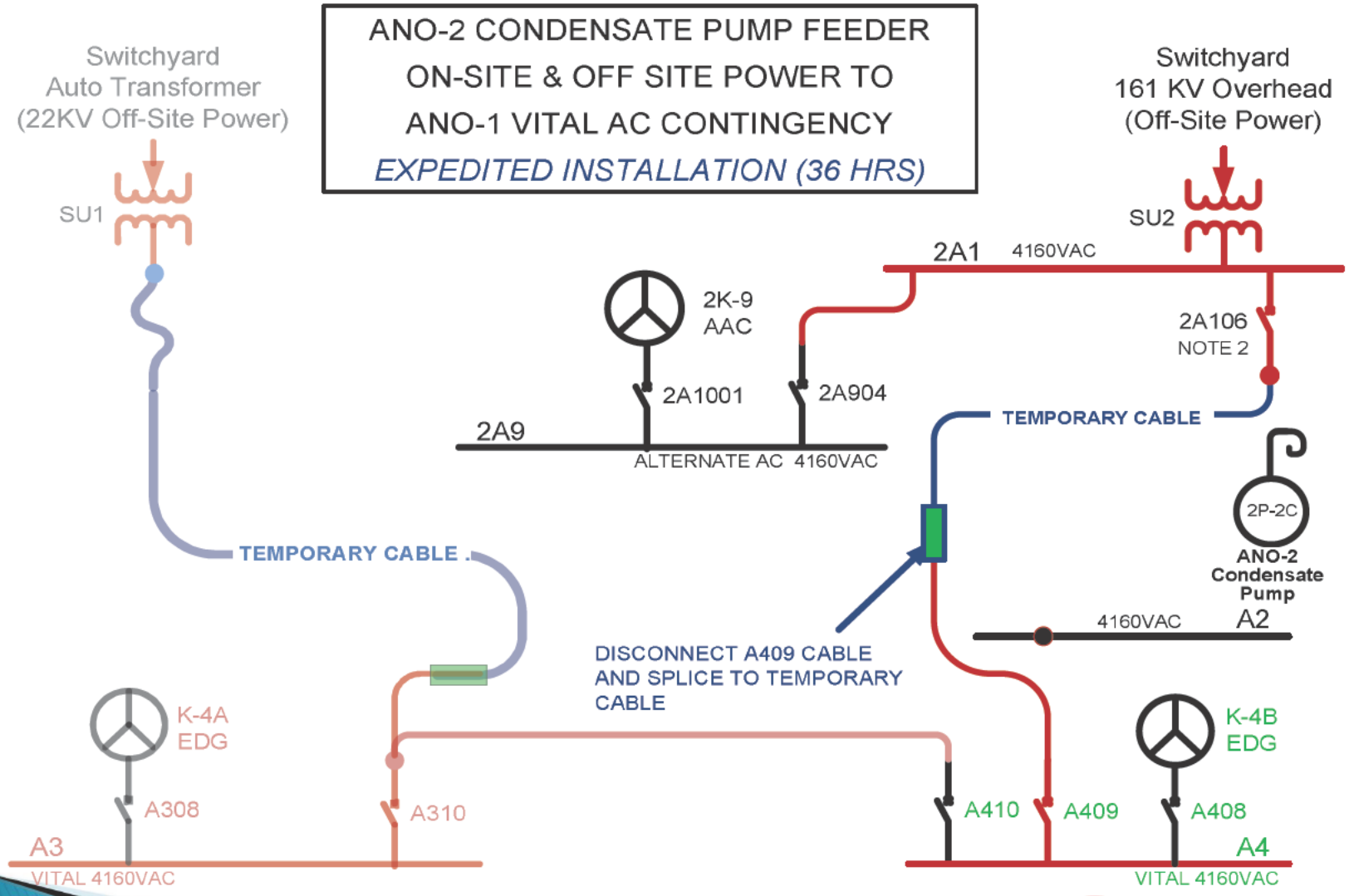

Entergy

Enclosure 1

Success Path 3 – Cable From Unit 2 Non-Vital Switchgear

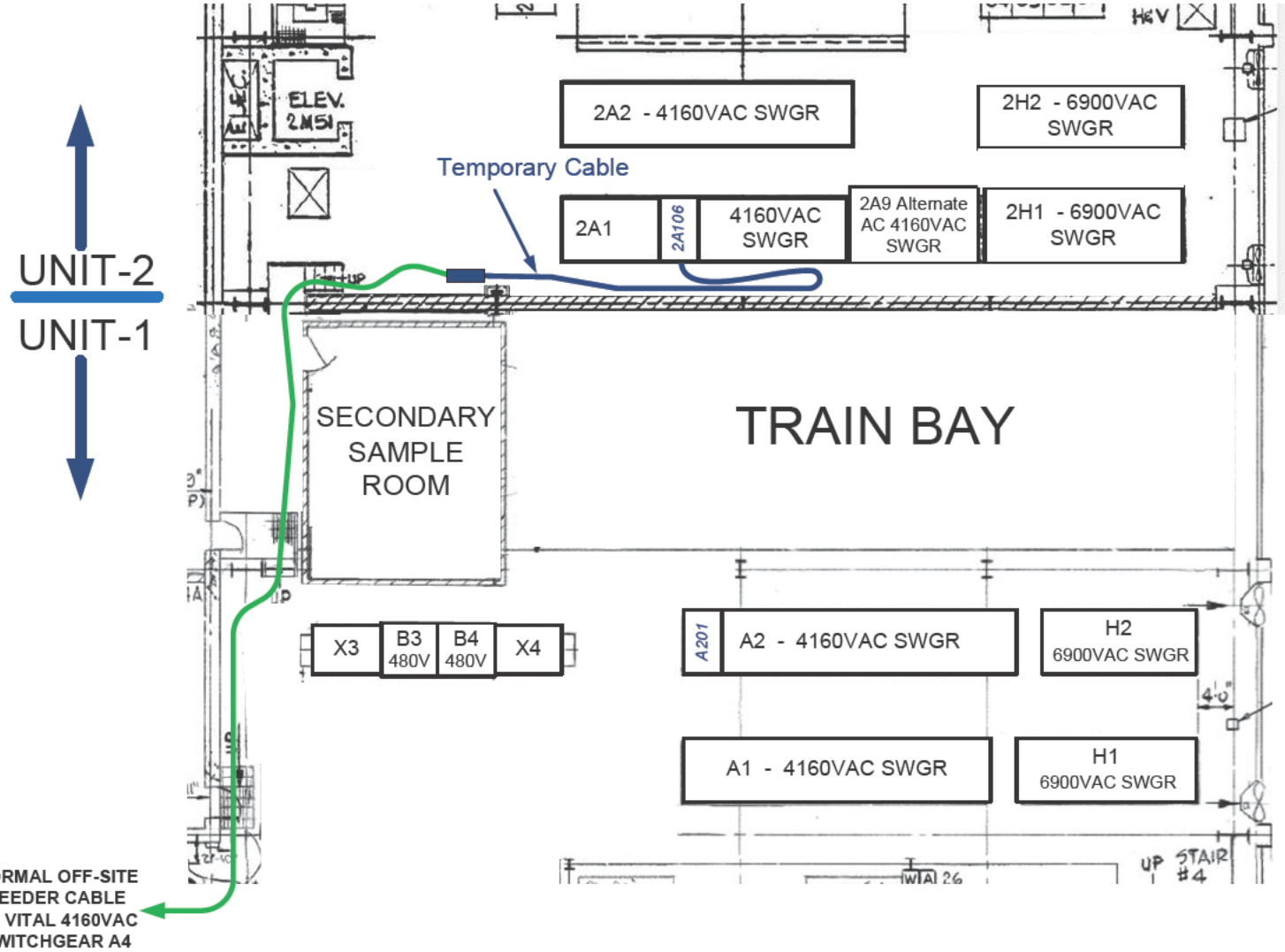

Enclosure 1

Success Path 3 – Cable From Unit 2 Non-Vital Switchgear

2A106 to Vital ANO-1 4160VAC vs. SU1 to Vital 4160VAC Demonstrated Source

2A106 to ANO-1 Vital 4160 VAC	SU1 Source (as installed)
7*100=700 feet of cable routing	7*500=3500 feet of cable routing
	7*50=350 feet of cable routing
14 splices/terminations – 4160V	28 splices/terminations – 4160V
	Modify SWGR Room Door
	Seismic Cable Support
	Temporary 4160 VAC Breaker
	DC control for Temp Breaker
	Temporary Breaker Setup & Testing
Minor 2A106 Interlock Defeats	
36 Hours	106 Hours

Entergy

Other 4160 VAC Success Paths

- Additional success paths for 4160VAC Power to vital busses were considered and scoped
  - Portable Diesel Generator (4160VAC)
  - Unit Aux Transformer backfeed from offsite 500KV line (Variation of SU1 temporary modification)
  - Restoration of A1 Non-Vital Switchgear fed from SU2 offsite transformer

Entergy

Summary – 4160 VAC Success Paths

- Simple design concepts (typical of normal outage activities)
- Simple to implement (typical of normal outage activities)
- Craft personnel were qualified and scheduled to perform the same type activities in outage when replacing circulating water pump 4160VAC cables
- Cables would have been routed away from damaged turbine building areas
- Success paths spatially and electrically independent
- Success paths could be implemented in parallel
  - Sufficient time to implement other success paths sequentially if one of the success paths failed
- Alternate 4160VAC Success Paths are less complex than the demonstrated source of offsite power which was actually installed and available in 4.4 days

Entergy

NRC Event Tree – Unit 1

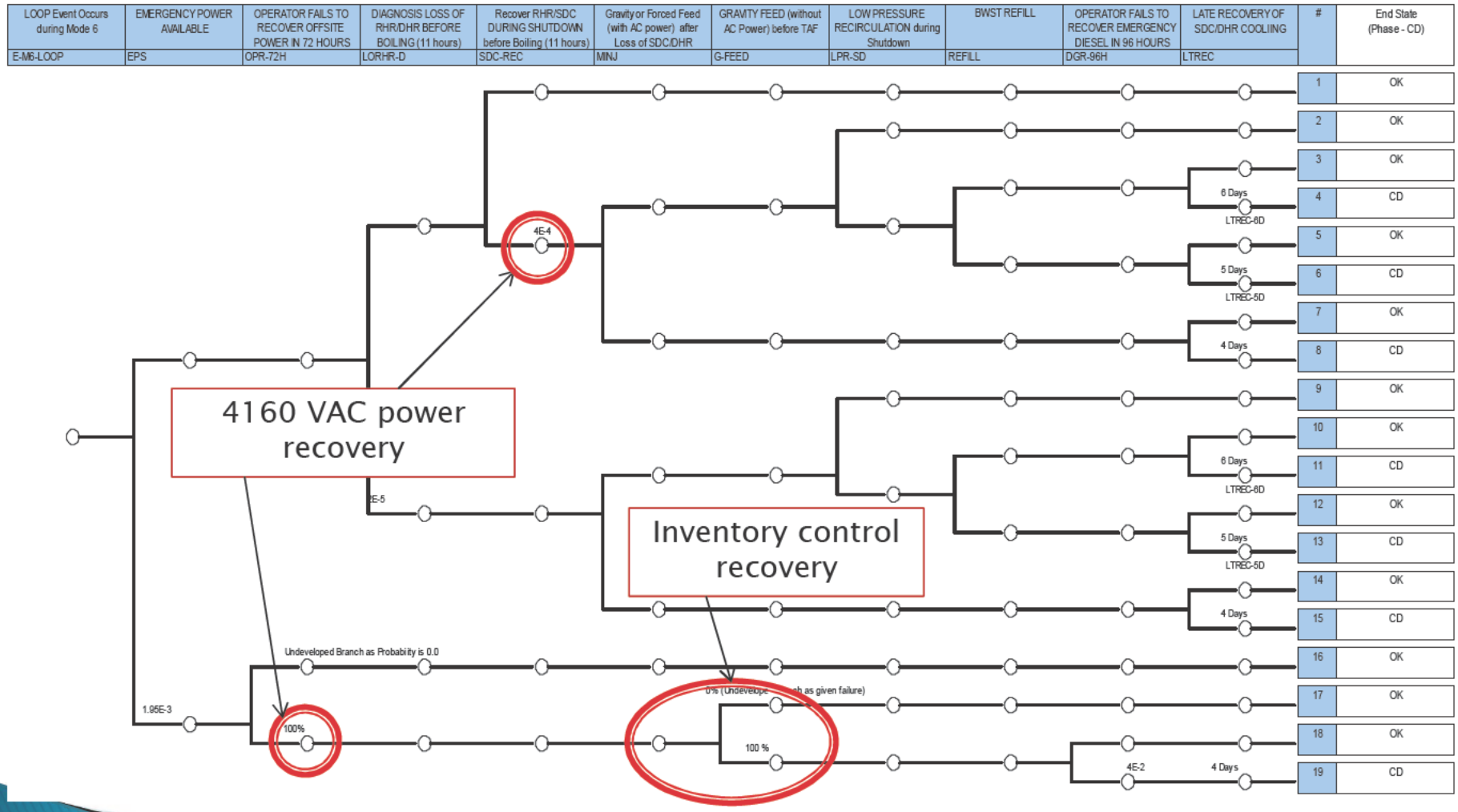

Entergy

Enclosure 1

Success Path 4 – Forced Flow Makeup

- Forced flow makeup to RCS via Borated Water Recirculation Pump
- One of six methods directed by Loss of Decay Heat Removal procedure
- Support actions
  - Provide temporary 480VAC power to Borated Water Recirculation Pump
    - 480VAC local distribution unaffected and available in Unit 1 power block
  - Establish makeup to Borated Water Storage Tank (BWST) per procedure
- 20 hours to implement
- Provides 180 GPM at 100 PSI RCS Pressure
  - Approximately 50 GPM required

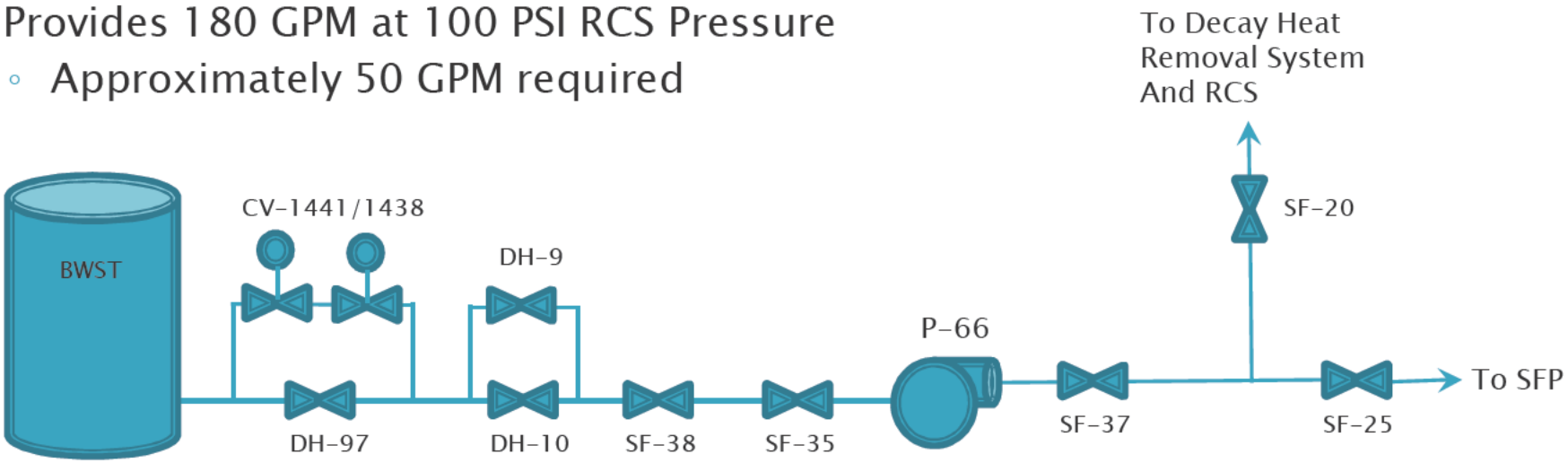

Enclosure 1

Success Path 4 – Forced Flow Makeup

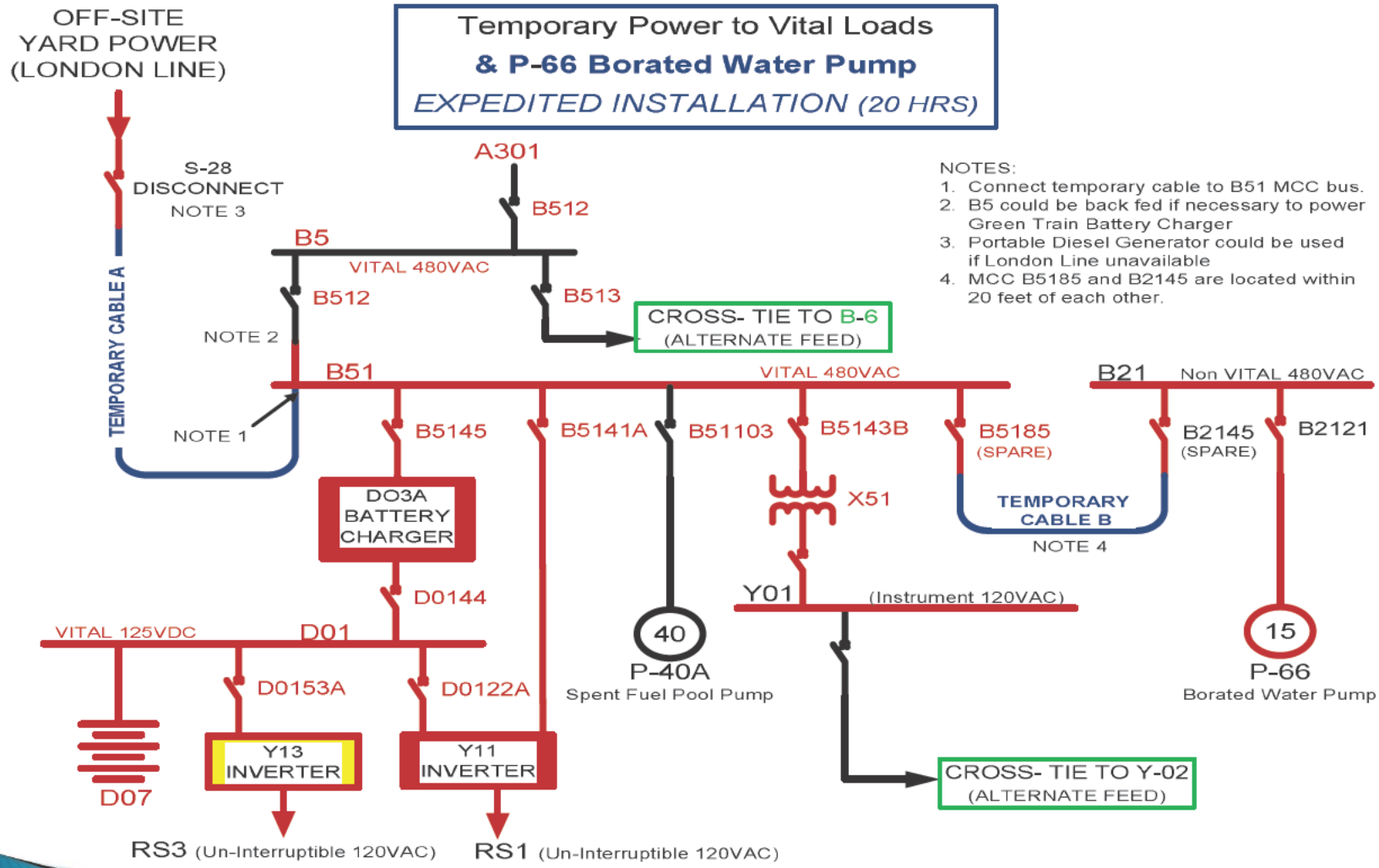

NOTES:
1. Connect temporary cable to B51 MCC bus.
2. B5 could be back fed if necessary to power Green Train Battery Charger
3. Portable Diesel Generator could be used if London Line unavailable
4. MCC B5185 and B2145 are located within 20 feet of each other.

Entergy

Enclosure 1

Success Path 4 – Forced Flow Makeup

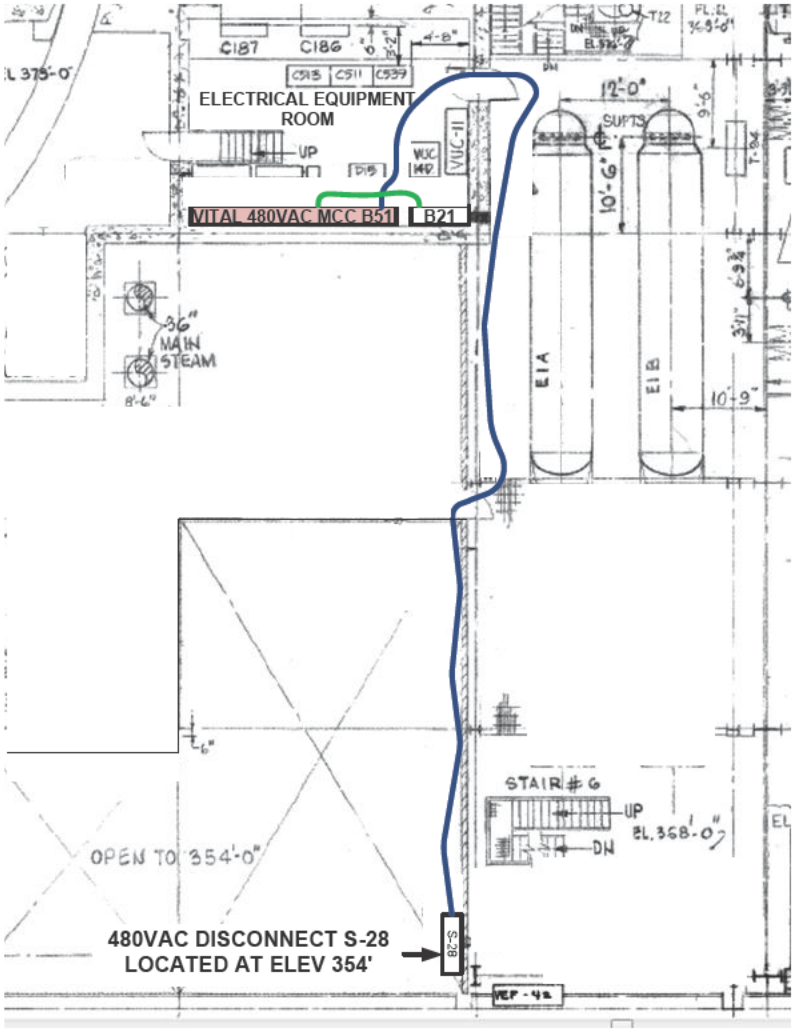

Enclosure 1

Success Path 4 – Forced Flow Makeup

Enclosure 1

Success Path 4 – Forced Flow Makeup

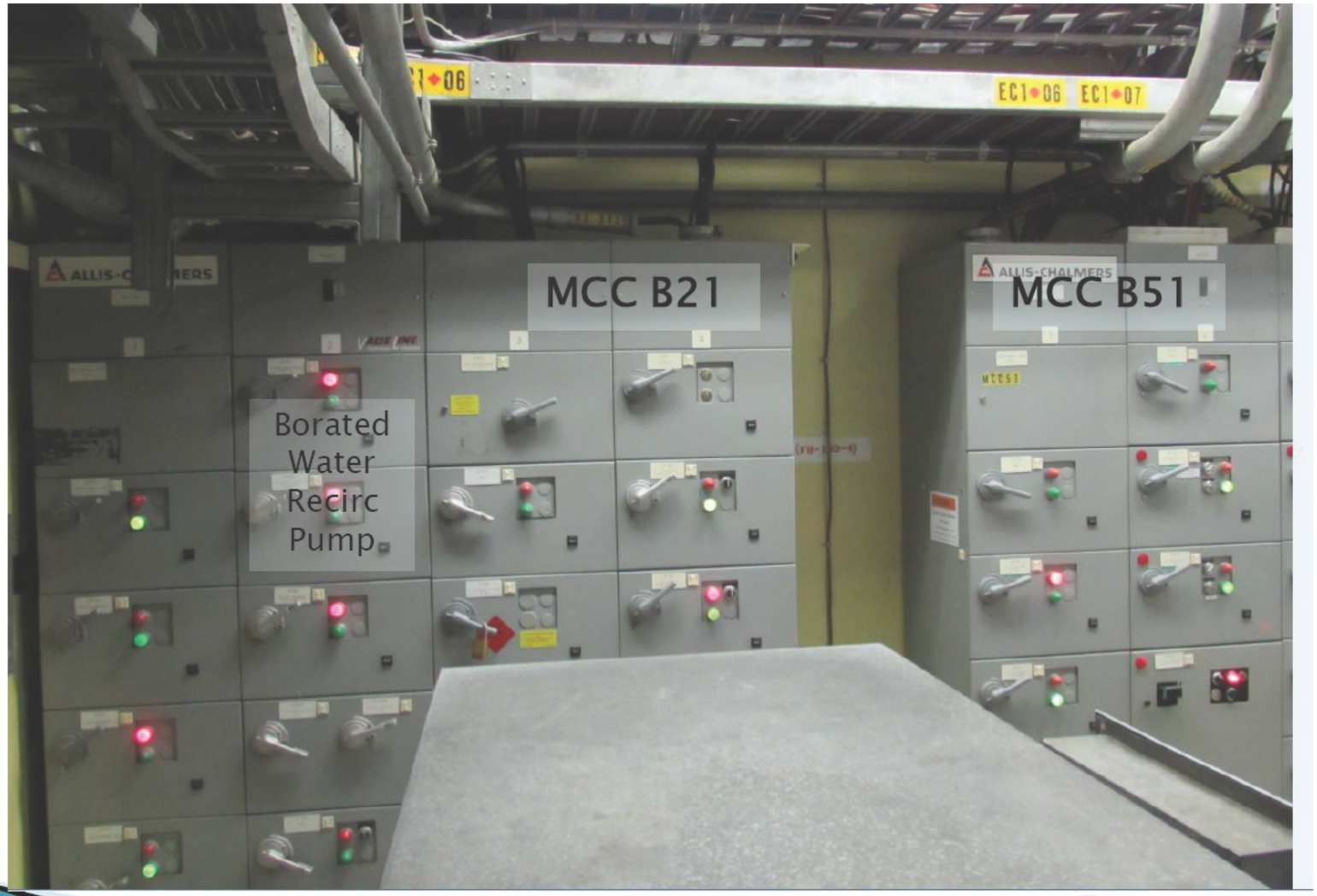

Entergy

Enclosure 1

Success Path 4 – Forced Flow Makeup

- Summary
  - Simple design concepts (standard electrical connections)
  - Simple to implement (typical outage temporary modification)
  - 480VAC temporary power typical of normal outage activities
  - 480VAC local distribution unaffected by event and available in power block at a disconnect switch
  - Success path spatially and electrically independent from 4160VAC Success Paths
  - Multiple variations of temporary power connection points are available
  - If one of the success paths or connection points failed, there was sufficient time to implement another path sequentially

Additional Benefits of Success Path 4

- Powering B51 provides additional makeup options
  - SFP Cooling Pump
  - Gravity Feed
    - Requires BWST makeup and Reactor Building (RB) vent
    - Vent path available via RB Purge exhaust
- Also energizes battery chargers and inverters for instrumentation

Timeline for Success Paths

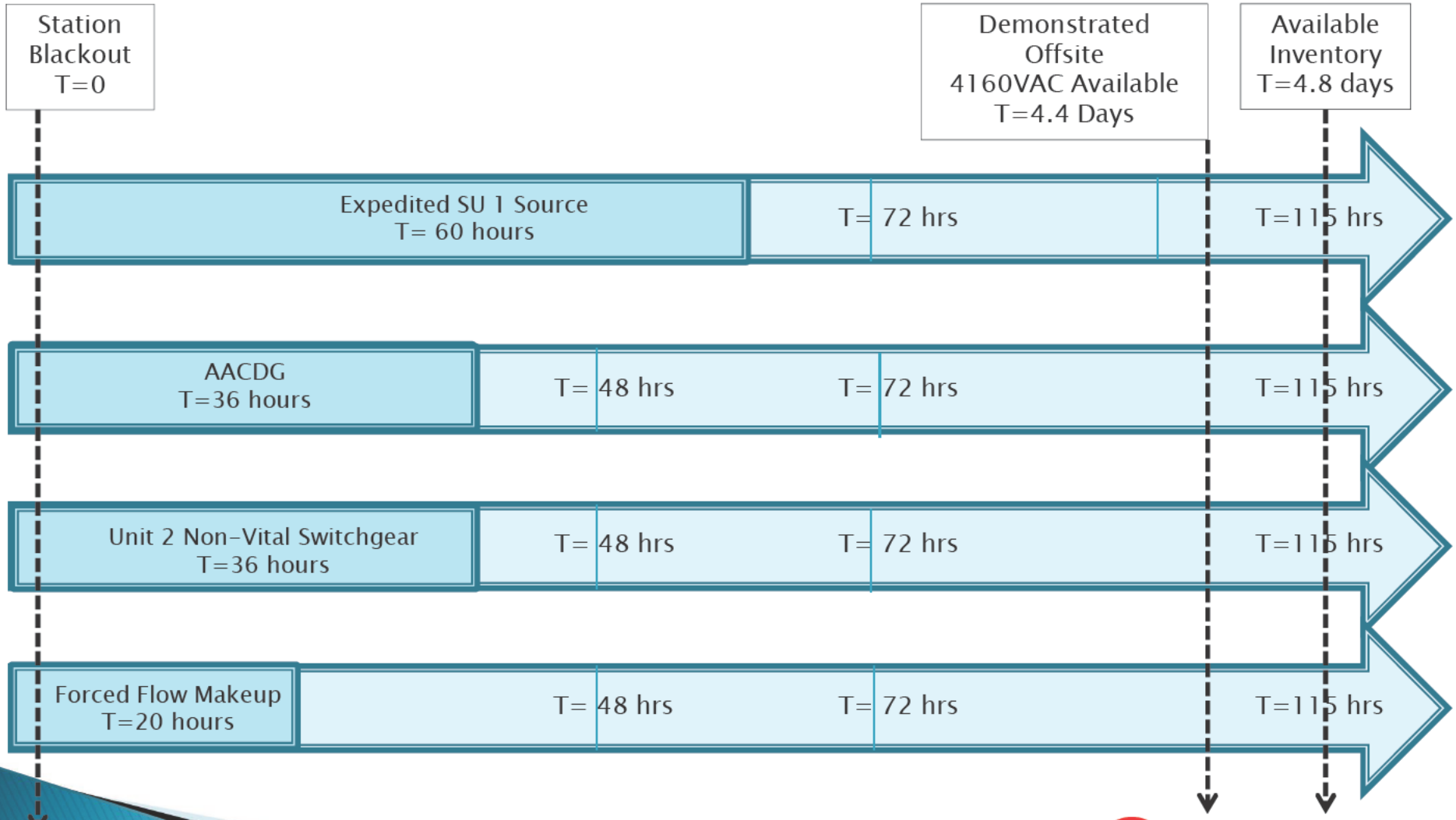

Entergy

Enclosure 1

Confidence in Success

- Substantial margin in response time (4.8 days available inventory)
- Refueling outage resources immediately available
  - Stator lift would only occur during major outages
  - Fleet resources available
- Simple and straightforward installations
  - Installed utilizing existing processes
  - Consistent with typical outage activities
  - Required materials onsite
  - Response time available to inspect and test success paths prior to energization
- Defense in Depth – multiple success paths
- Successfully demonstrated response by actually installing and making 4160VAC power available in 4.4 days

Entergy

Significance Determination Unit 1

Richard Harris
Manager, Emergency Planning

Key Objectives

- Realistic estimate of risk utilizing best available information
  - Review key assumptions in the NRC risk assessment
  - Identify applicable ANO success paths
  - Assess impact of ANO success paths on the NRC analysis
- Present ANO Risk significant results

Entergy

Significance Determination – Unit 1

- Desired result is a safe and stable end state
- NRC Event Tree model was reviewed to understand method and results
- Event tree dominant sequences were reviewed
- No credit in the NRC event tree for potential recovery actions associated with 4160VAC and inventory control
- Assumption is not realistic based on the actual recovery of offsite power and the potential for other success paths

Entergy

NRC Event Tree – Unit 1

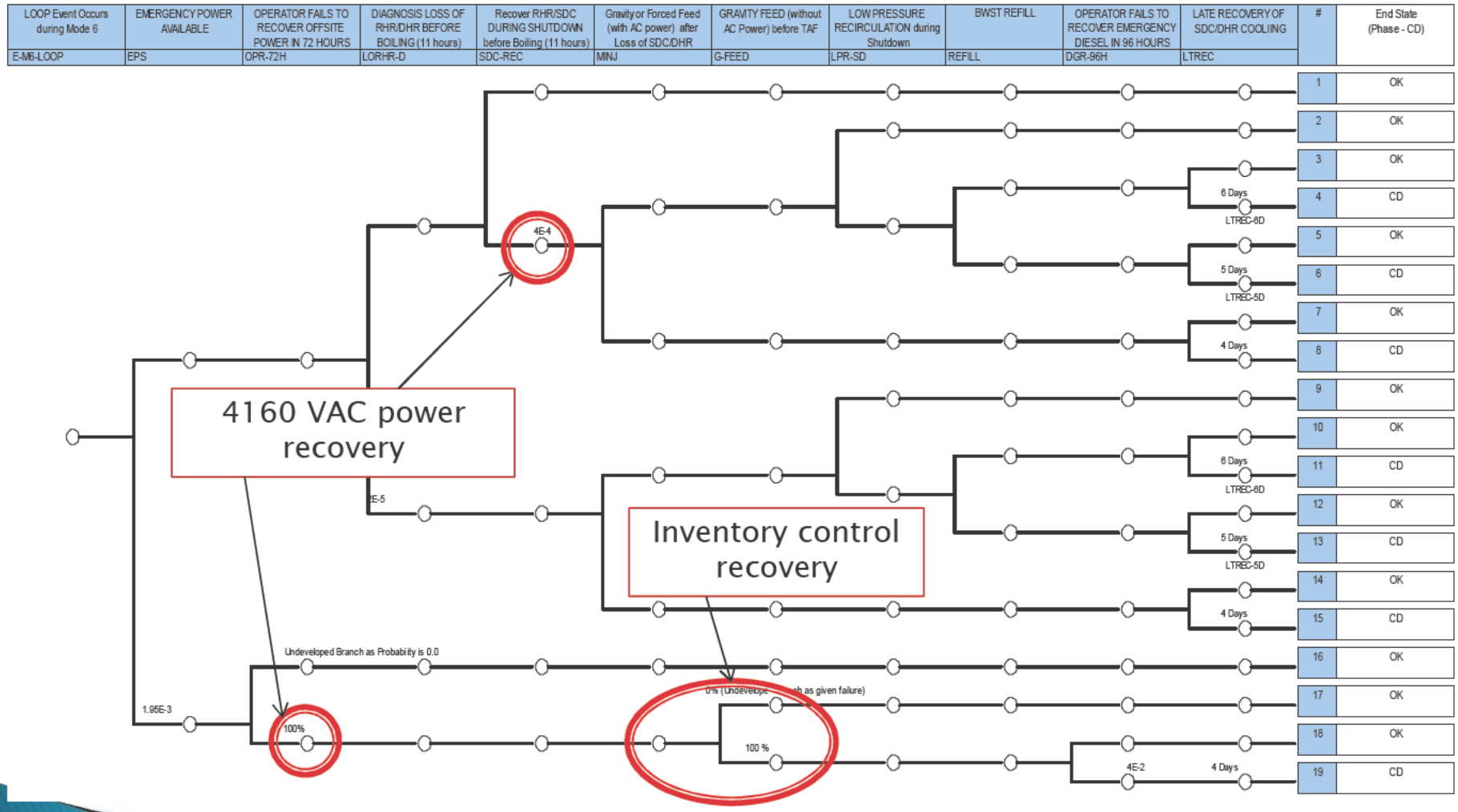

Entergy®

Enclosure 1

Methodology

- Consulted available resources for determining an acceptable method of calculating recovery factors
- No definitive standard was identified for calculating recovery factors for shutdown conditions
- A realistic risk assessment must include recovery potential that was present
- Ultimate goal is to determine best estimate recovery factor

Methodology Development

- Assembled expert team
  - Risk analyst
  - Operations
  - Outside consultants
- Different methods and options considered
- Modeling methods ultimately selected
  - HRA Calculator
  - EPRI's "Human Action Reliability Procedure", TR-101711

Entergy

Recovery Elements Considered

- Cognitive/Decision Making
- Design Development
- Execution

Cognitive/Decision Making Factors

- Cognitive elements that are important to success were developed
  - Examples
    - Cues
    - Assessment against safety functions
    - Contingency plan development
    - Outage resources immediately available
    - Simplicity of temporary modifications
- HRA Calculator was reviewed for applicability
- It was determined that the Cognitive portion of the HRA Calculator is applicable for this element

Entergy

Design Development Factor

- Examples of design development issues that were considered
  - Resource limitations and dynamics
  - Affect on existing systems
  - Operating Crew/Staff interaction
  - Temporary Modification development
- Concluded that the HRA Calculator does not adequately address Design Development Factor
- Alternative approaches were considered
  - Determined that the recovery event tree from EPRI's Human Action Reliability Procedure was applicable

Entergy

Recovery Event Tree from EPRI

Non-recovery Event	Time available for action	Relative Complexity of action	Availability of training or practice for action	Nature of environment for work area	Qualitative Probability of Failure	Quantitative Assessment
	long (>4 hrs)	simple	trng/practice	good	low	0.01
				poor	mod. Low	0.03
			no trng/practice	good	mod. Low	0.03
				poor	mod. High	0.05
		complex	trng/practice	good	mod. Low	0.03
				poor	mod. High	0.05
			no trng/practice	good	mod. High	0.05
				poor	high	0.1
	Intermediate (1-4 hrs) (similar Development)					
	short (<1 hr) (Similar development)					

Entergy

Enclosure 1

Execution Factor

- Evaluated the list of execution steps for successful implementation
- HRA Calculator was reviewed for applicability
- It was concluded that this element can be properly modeled by the HRA Calculator
- Individual steps from the implementing instructions for the Temporary Modification that was actually implemented were evaluated for this portion of the analysis

Quantification of Recovery Factor

- Using processes discussed above
  - HRA Calculator was used to determine the Cognitive and Execution results
  - A screening factor assigned to the recovery event tree from EPRI was used to estimate the Design Implementation results
    - Screening factor dominates results and provides some conservatism
  - Results were included in a fault tree logic for determining the failure probability

4160VAC Recovery Fault Tree

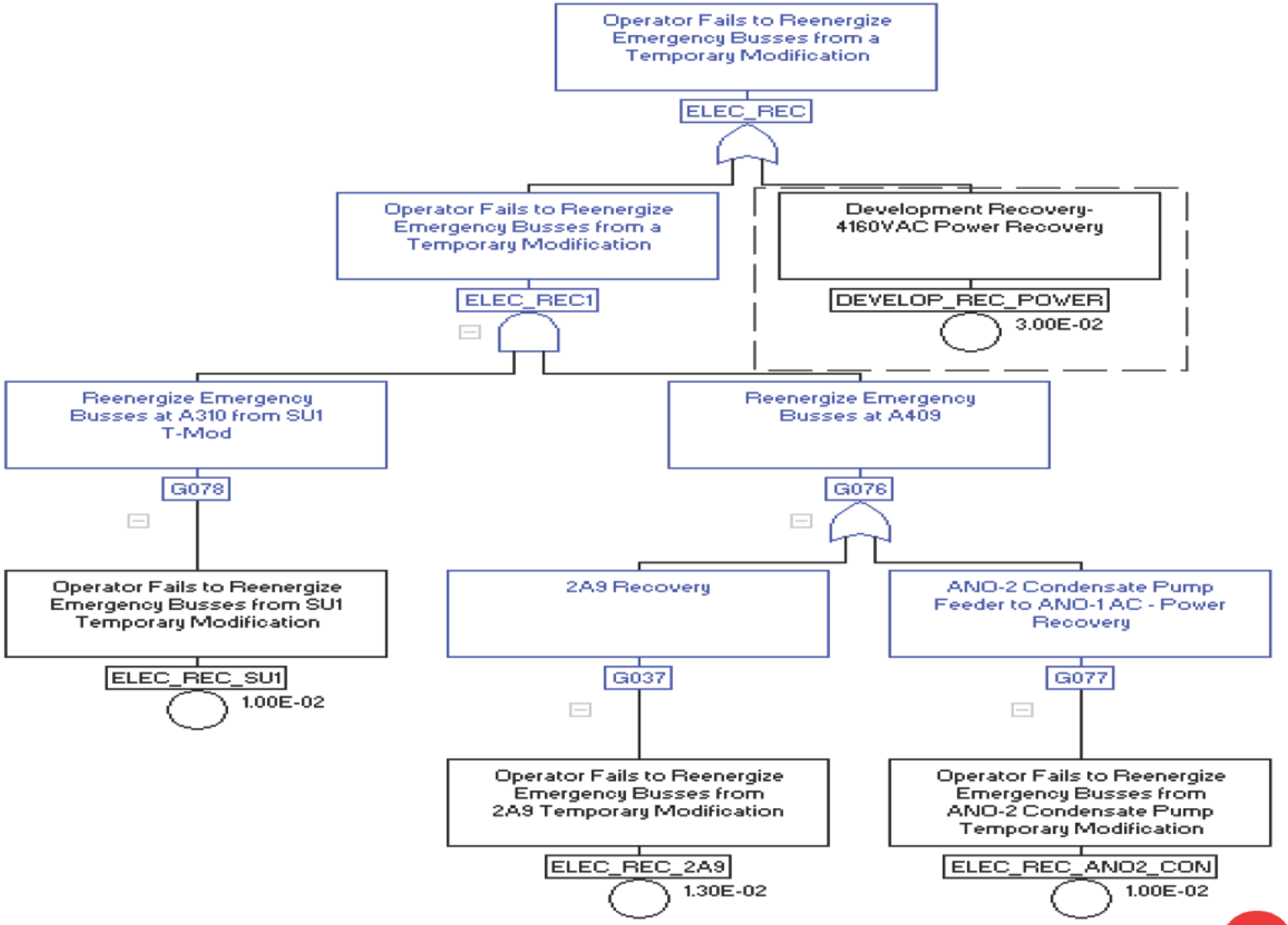

Enclosure 1

Modeling Method Results

The resulting point estimate for 4160VAC recovery fault tree is 3.1E-02

4160VAC Recovery Evaluation – Alternate 1

- Using a normal distribution, performed a statistical assessment for Mean Time To Repair (MTTR) vs. available time
- Assumed best estimate completion times as the mean (60 hours)
- Used a standard deviation of 20 hours
- Results in a probability of failure = 2.6E-3

4160VAC Recovery Evaluation – Alternate 2

- Actual offsite power was restored before the calculated time to core uncovery
  - Calculated a recovery factor using HRA Calculator for the time between recovery of power and core uncovery
  - Night orders were in place
  - Operator actions were not complicated
- Results in a probability of failure = 2.0E-03

NRC Assumptions for Inventory Recovery

- NRC model did not give credit for this recovery action
- Success Path 4 – Forced Flow Makeup

Recovery Dependencies

- Reviewed dependencies between the 4160VAC recoveries and inventory recoveries
- Each of the recovery options would be worked independently
  - Sufficient persons available to work multiple success paths
  - No spatial conflicts between the two main recoveries
- Conclusion: No dependency between 4160VAC and inventory control recoveries

Entergy

Inventory Control Recovery Factor

- Same approach applied to inventory recovery as was applied in determining the 4160VAC recovery factor
- These results were included in a fault tree logic for determining the failure probability

Recovery Fault Tree for Inventory Control

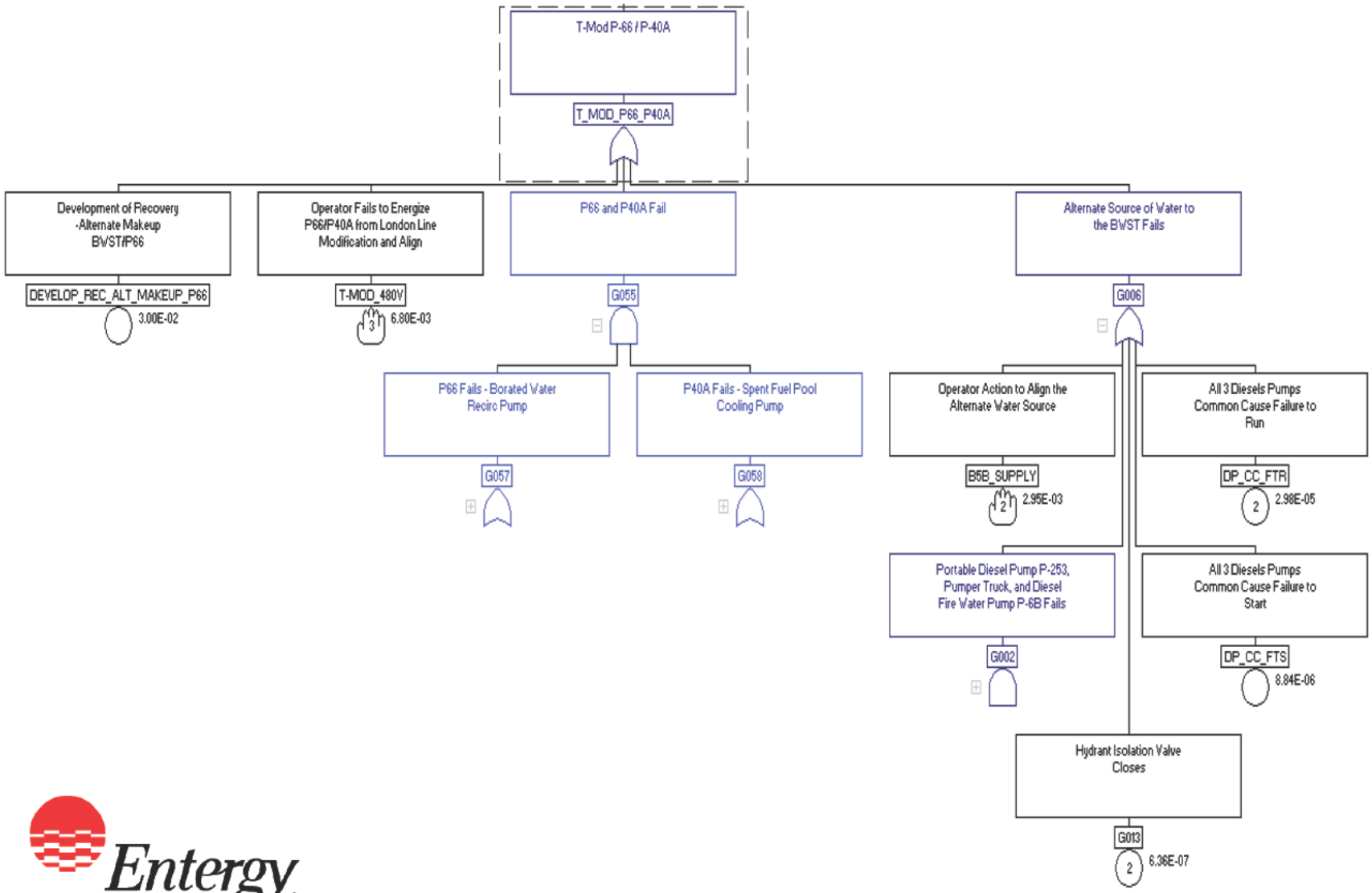

Entergy

Enclosure 1

Modeling Method Results

The resulting point estimate for inventory recovery fault tree is 4.0E-02

Results

- When these recoveries are applied to the NRC's event tree model, the results are estimated to be 5.5E-06 CCDP

Results to Include Sensitivities

Estimated NRC CCDP Results with Recoveries

	4kV recovery				
	5.00E-03	**4.88E-06**	**4.77E-06**	**4.71E-06**	
mean	3.12E-02	**6.14E-06**	**5.45E-06**	**5.07E-06**	
	1.00E-01	**9.44E-06**	**7.25E-06**	**6.01E-06**	
		1.00E-01	3.95E-02	5.00E-03	***Inventory Control***

mean

ANO Shutdown PRA Risk Significant Results

- ANO developed event tree for Unit 1
- Utilized industry experts
- Quantifying this event tree has resulted in a core damage probability to be 4.8E-06

Conclusion

- ANO's demonstrated response to the loss of offsite power provides overwhelming evidence that the probability of failure is not 1.0 as assumed by the NRC analysis
- ANO has instituted a reasonable method for assessing the risk of recovery
- ANO calculated the risk associated with the stator drop to be in the mid E-6 range

Entergy

Break

ANO Unit 2 Opening Comments

Jeremy Browning
ANO Site Vice-President

Enclosure 1

Opening Comments

- Plant personnel took appropriate actions
- Plant mitigating systems performed as designed
- Priorities for system alignment and restoration of plant systems were based on actual plant conditions
- Procedurally directed and available success paths not credited in NRC risk model
- Available Success Paths would have been driven and implemented by existing procedures and processes
- Available Success Paths are trained on and are not complex and can be implemented in a timely manner
- Success Paths are modeled in existing PRA models
- Additional modeling improves the accuracy of the estimated risk

ANO Unit 2 Response & Recovery

John Hathcote
Unit 2 Manager – Shift Operations

Objectives

- Provide detail of procedurally directed electrical power recovery strategies using immediately available power sources
  - Offsite SU2 transformer available to power non-vital 4160VAC switchgear (2A2)
  - Alternate AC Diesel Generator
  - Cross tie vital 4160VAC busses 2A3/2A4

Unit 2 Response

- Unit 2 100% power
- 'B' Reactor Coolant Pump (RCP) tripped due to breaker vibration
- Reactor tripped as a result of RCP trip
- Uncomplicated post trip response
- Off-site source auto-transferred from UAT to SU3
- Diagnosed Reactor Trip Recovery

Unit 2 Response

- SU3 lock out occurred ~90 minutes post trip
  - Water migration into the bottom of the RED train non-vital 4160VAC switchgear cubical 2A113
- SU2 automatically aligned to RED train
  - 2A1 and 2A3 energized from SU2
- GREEN train initially de-energized
  - GREEN train 2A2 and 2A4 de-energized based on selected configuration (2A2 feed from SU2 in PTL)
    - 2A2 remained de-energized
    - GREEN Train 4160VAC Vital Bus (2A4) energized by #2EDG on Bus undervoltage condition

Entergy

Unit 2 Response

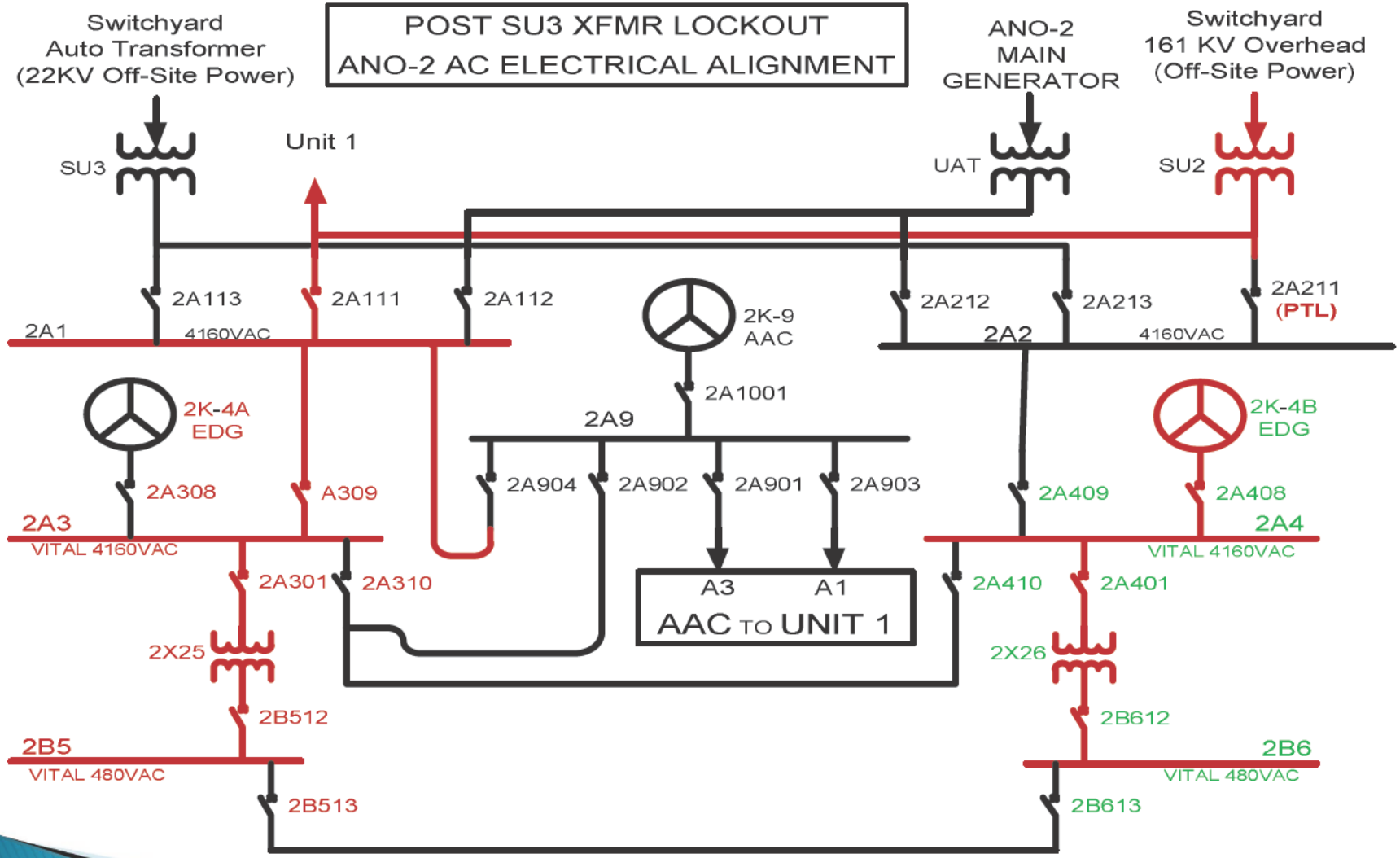

Entergy

Enclosure 1

Unit 2 Response

- SU2 Offsite Transformer Design
  - Capable of supplying both Units
  - Operating procedures limit the number of busses on both units that can be auto-transferred to SU2
    - 2A2 breaker hand switch in Control Room in pull to lock to control auto loading in SU2
  - Capable of manual loading both busses to SU2

- SU2 Offsite Transformer remained available for use on the GREEN (2A2/2A4) Train
  - Procedural guidance to manually energize 2A2 from SU2
  - Power was stable and SU2 to 2A2 was not needed
  - Later transferred power from SU2 to 2A2

Unit 2 Response

- Unit 2 in a stable condition with power to all safety equipment
- Redundant systems available for decay heat removal
- Alternate AC Diesel Generator and 2A9 to Unit 2 busses were not damaged and were available
  - Initially declared unavailable
  - Not needed to support Unit 2
    - SU2 to both RED and GREEN Trains
    - #1 and #2 EDGs operable

Entergy

Unit 2 Recovery

- Priorities dictated by circumstances
  - If additional power challenges were to occur
    - Unit 2 Control Room would re-diagnose
      - LOOP, SBO, Functional Recovery
    - Pursue procedurally directed action for recovery of available power
      - Feed to 2A2 from SU2
      - Alternate AC Diesel Generator
      - Cross tie 4160VAC busses 2A3 and 2A4

Entergy

Unit 2 Recovery

- Feed for 2A2 from SU2
  - Proceduralized
  - Control Room staff trained on this action
  - In Control Room activity
  - Available resources

Unit 2 Recovery

- Alternate AC Diesel Generator (AACDG) available to Unit 2
  - AACDG and 2A9 feeds to Unit 2 not affected
  - Only visible damage was associated with 2A9 feed to Unit 1 load side connections to A1 and A3
    - Fully capable of supplying Unit 2 loads if required
    - Confirmed later by Electrical Maintenance and Engineering through inspection and testing
  - 2A9 status verification was not given a high priority based on the stable condition of the units

Unit 2 Recovery

- AACDG available for Unit 2
  - Emergency Use
    - In a black out condition, EOPs instruct operations to utilize the AACDG
    - AACDG would have been used by the Control Room to power a vital 4160VAC bus and satisfy a safety function
      - Available in ~15 minutes
      - Adequate time available to establish feed in SBO
        - 6 hours until transition to manual operations on Unit 2 EFW pump

Entergy

Unit 2 Recovery

- Ability to cross-tie 4160VAC Busses was available to the Operators
  - Proceduralized
  - Operations staff is trained on this action
  - Resources available

Conclusion

- Available success paths not credited in NRC risk model
  - 2A2 availability from SU2
  - AACDG
  - Cross tie 4160VAC busses 2A3/2A4
- Four of five possible power sources available
- Resources
- Training
- Procedures

Significance Determination Unit 2

Richard Harris
Manager, Emergency Planning

Key Objectives

- Best estimate of risk utilizing available information
  - Review key assumptions in the NRC risk assessment
  - Identify applicable ANO success paths
  - Discuss ANO risk significant results

NRC Assumptions Affecting Dominant Sequences

- Review of the NRC results for the Unit 2 SDP
  - Dominant cutsets are driven by a loss of vital power
    - 2A2 unavailable
    - AACDG unavailable
    - No credit to cross tie 4160VAC busses 2A3/2A4

Entergy

4160 VAC Power Recovery

- 2A2 was available from SU2
- Operations guidance and procedures available for offsite power feed to 2A2
- ANO PRA existing recovery for aligning SU2 to 2A2 is 8.0E-4

4160 VAC Power Recovery

- Operations guidance and procedures available for AACDG alignment if needed for loss of vital power
- AACDG was available and would have successfully provided power to the vital loads
- ANO has increased PRA unavailability by a factor of 0.1 for AACDG (unavailability assumed to be 0.17)

4160 VAC Power Recovery

- 2A3 / 2A4 cross tie capability was available
- Per Operations guidance and procedures, 4160VAC busses 2A3/2A4 would have been cross tied if needed for loss of vital power
- ANO PRA existing recovery of the 2A3/2A4 cross tie is 2.0E-4

Results

- These new results present a risk that is categorized as 1.8E-6 CCDP
- A sensitivity analysis reflects the following
  - 3.9E-07 CCDP – lower bound
  - 5.3E-06 CCDP – upper bound

Entergy

Site Actions & Common Cause

Dale James
ANO Regulatory & Performance Improvement Director

Corrective Actions

- Lift plan for refurbished stator incorporated Root Cause findings
  - Developed Detail Engineering Change Package
  - Computer modeling
  - Load test
  - Third Party Independent Review
- Revised Entergy Fleet procedure EN-MA-119, Material Handling Program, to require a documented engineering response to evaluate specially designed temporary lifting devices
  - Owner review in accordance with EN-DC-149, Acceptance of Vendor Documents
  - Verification of a third party independent review of vendor calculations
  - Verification of load test

Entergy

Corrective Actions

- Revised Entergy Fleet procedure EN-DC-114, Project Management
  - Guidance for contract language to ensure necessary design documentation provided
  - Guidance for Project Management team expertise for high consequence evolutions
- Reinforced standards for vendor oversight plans
- Established structured tool for project management oversight
- Subsequent directive issued requiring manager level validation of mitigating actions
- Industry wide web cast hosted by ANO Site VP discussing the event and lessons learned

Common Cause Review

- Review of 2013 conditions including stator drop for common causal factors
  - Seven plant conditions included in the review
    - Interviews conducted to provide additional insights
  - Trend Code and Keyword review of Category A and B Condition Reports from 2012–Present for further refinement
  - External agency and assessment report reviewed
  - Review performed by team consisting of independent analysis, fleet and ANO personnel
- Specifically charged with assessing oversight as a common causal factor

Entergy

Fleet Learnings

Joe Kowalewski
Senior Vice President and COO – Southern Regional Operations

Fleet Learnings

- Entergy depends on contractors to perform work to improve the reliability and improve the safety of the plant
- Entergy must have robust processes and oversight in place to detect and correct errors before they cause significant consequences

Entergy

Actions Completed

- EN-MA-119 Material Handling and EN-DC-114 have been revised to incorporate lessons learned from the ANO Stator Event
- Communication of lessons learned to the Fleet and assessment of ongoing projects with heavy lifts
- Organizational changes to provide additional oversight of engineering activities for major project and additional oversight of site project management
- Improvements in the skill assessment of supplemental personnel supervision, including Entergy presence at oral boards and evaluated practical exercises

Actions In-Progress

- Common cause evaluation of contractor performance issues
- Participation in industry committee supporting assessment and lessons learned of industry wide high consequence vendor/contractor performance issues
- Evaluation of Fleet process and oversight improvements based on industry wide lessons learned
- Implementation of improvements in the validation of completed actions for the mitigation of identified high project risks

Closing Comments

Jeremy Browning
ANO Site Vice-President

U.S.NRC
United States Nuclear Regulatory Commission
Protecting People and the Environment

Arkansas Nuclear One Regulatory Conference

Nuclear Regulatory Commission - Region IV

Arlington, TX

May 1, 2014

Agenda

- Introduction of Participants
- NRC Opening Remarks
- Licensee Presentation
- NRC Caucus
- Final Questions
- Closing Remarks
- Conference Adjournment
- Questions and Comments from Members of the Public

PUBLIC MEETING ATTENDANCE LIST	
LICENSEE/FACILITY	Entergy/Arkansas Nuclear One
DATE/TIME	May 1, 2014 / 1:00 p.m. (CDT)
LOCATION	Region IV, Arlington, TX
NAME (PLEASE PRINT)	**ORGANIZATION**
John McCann	Entergy
Bryan Ford	Entergy
JOHN HATHCOTE	ENTERGY / ANO
Gary Sullins	Entergy / ANO
DAVID MCKERNEY	ENTERGY / ANO
Dale James	Entergy / ANO
Jeremy Browning	Entergy / ANO
STEPHENIE PYLE	ENTERGY / ANO
Joseph Kowalewski	ENTERGY
Mike SHANNON	QGTB / ANO
Jason Hall	Entergy
Richard Harris	Entergy / ANO

Enclosure 3

PUBLIC MEETING ATTENDANCE LIST

LICENSEE/FACILITY	Entergy/Arkansas Nuclear One
DATE/TIME	May 1, 2014 / 1:00 p.m. (CDT)
LOCATION	Region IV, Arlington, TX

NAME (PLEASE PRINT)	ORGANIZATION
JAMES, WILLIAM J.	ENTERGY
ALUISE, JOSEPH A.	ENTERGY
Neil O'Keefe	NRC
VICTOR NSIKAK	Bigge
Sanjay Minocha	Bigge
Jamie Weiss	Siemens | EWLLP
Dave Duerr	Siemens
Michael Langelier	NRC

Enclosure 3

NWX-US NUCLEAR REGULATORY COM Conference Call
Mr. James Melfi - Conference Leader
May 1 2014 @ 12:00 PM CT
Confirmation # 4934859

Speakers:		
Dori	Willis	NRC
Greg	Werner	Mike Bloodgood
Joseph	Giitter	NRC
Sunil	Weerakkody	NRC
Michael	Markley	NRC HQ
Eric	Towell	NRC
Kamishan	Martin	NRC HQ
Lauren	Casey	NRC
Geoff	Miller	NRC
Abin	Fairbanks	NRC
Paul	Nizonv	NRC Region 4

	First Name	Last Name	Affiliation
1	Kenneth	Baldwin	Private Citizen
2	Bernie	Bevill	AK Dept of Health
4	Alan	Blind	Public
5	Thomas	Bostrom	Bigge Crane & Rigging
7	Mike	Bowling	Entergy
8	Justin	Brittler	Pope County Office of Emergency Management
9	David	Condi	ABZ Inc.
10	Mike	Cooper	Certrec Corporation
11	Dan	Cunnard	Seimans
12	Jeff	Dail	Duke Energy
15	Carla	Fuller	Nuclear Regulatory Commission Region 4
16	Kelly	Gamble	Vincent and Elkins
17	Darla	Gardner	Finance MGR for Nuclear Fleet
18	Joshep	Gitter	NRC
19	Mike	Guerrero	Siemens
20	David	Gullott	Exelon
21	Greg	Halnon	First Energy Corp
22	Mark	Hollander	Siemens
23	Cet	Jackson	Siemens
24	Jeff	Julius	Scientech
27	Dan	Kaunnard	Siemens
28	Fred	Laber	Siemens
29	David	Lochbaum	Union of Concerned Scientists
30	William	Maier	NRC
31	Jim	Melfi	NRC
32	Sarah	Millard	Communication Specialist
34	Sanjay	Minocha	Kane Russell Omen Logan

	First Name	Last Name	Affiliation
35	Robert	Myer	PROS
36	Paul	Nizov	NRC
37	Roosevelt	Shavers	OSHA
38	Deborah	Shurberg	Human Performance Analysis Corporation
39	Lisa	Simpson	Exelon
40	Brian	Smith	Siemens
41	David	Smith	Arkansaw Democrat Gazette
42	Whitney	Snipes	River Valley Leader
43	Guy	Thompson	Siemens
44	David	Tondi	ABZ
45	Russell	Voight	Siemens
46	Shelton	Voigt	Siemens Energy
47	Seno	Weerakkody	NRC
48	Sunil	Weerkkoy	NRC
49	Gregory	Werner	NRC
50	Michael	Wilder	Duke Energy
52	Carrie	Wilson	Duke Energy
54	Peter	Wilson	TN Valley Authority