NUREG/IA-0439

International Agreement Report

TRACE Analysis on Heat Removal Decrease Accidents for AP1000

Prepared by:
Jong-Rong Wang, Kai Wang*, Hao-Tzu Lin, Chunkuan Shih*

Institute of Nuclear Energy Research, Atomic Energy Council, R.O.C.
1000, Wenhua Rd., Chiaan Village, Lungtan, Taoyuan, 325, Taiwan

*Institute of Nuclear Engineering and Science, National Tsing Hua University
101 Section 2, Kuang Fu Rd., HsinChu, Taiwan

K. Tien, NRC Project Manager

Division of Systems Analysis
Office of Nuclear Regulatory Research
U.S. Nuclear Regulatory Commission
Washington, DC 20555-0001

Manuscript Completed: September 2013
Date Published: March 2014

Prepared as part of
The Agreement on Research Participation and Technical Exchange
Under the Thermal-Hydraulic Code Applications and Maintenance Program (CAMP)

Published by
U.S. Nuclear Regulatory Commission

AVAILABILITY OF REFERENCE MATERIALS IN NRC PUBLICATIONS

NRC Reference Material

As of November 1999, you may electronically access NUREG-series publications and other NRC records at NRC's Public Electronic Reading Room at http://www.nrc.gov/reading-rm.html. Publicly released records include, to name a few, NUREG-series publications; *Federal Register* notices; applicant, licensee, and vendor documents and correspondence; NRC correspondence and internal memoranda; bulletins and information notices; inspection and investigative reports; licensee event reports; and Commission papers and their attachments.

NRC publications in the NUREG series, NRC regulations, and Title 10, "Energy," in the *Code of Federal Regulations* may also be purchased from one of these two sources.

1. The Superintendent of Documents
   U.S. Government Printing Office
   Mail Stop SSOP
   Washington, DC 20402–0001
   Internet: bookstore.gpo.gov
   Telephone: 202-512-1800
   Fax: 202-512-2250
2. The National Technical Information Service
   Springfield, VA 22161–0002
   www.ntis.gov
   1–800–553–6847 or, locally, 703–605–6000

A single copy of each NRC draft report for comment is available free, to the extent of supply, upon written request as follows:
Address: U.S. Nuclear Regulatory Commission
Office of Administration
Publications Branch
Washington, DC 20555-0001
E-mail: DISTRIBUTION.RESOURCE@NRC.GOV
Facsimile: 301–415–2289

Some publications in the NUREG series that are posted at NRC's Web site address http://www.nrc.gov/reading-rm/doc-collections/nuregs are updated periodically and may differ from the last printed version. Although references to material found on a Web site bear the date the material was accessed, the material available on the date cited may subsequently be removed from the site.

Non-NRC Reference Material

Documents available from public and special technical libraries include all open literature items, such as books, journal articles, transactions, *Federal Register* notices, Federal and State legislation, and congressional reports. Such documents as theses, dissertations, foreign reports and translations, and non-NRC conference proceedings may be purchased from their sponsoring organization.

Copies of industry codes and standards used in a substantive manner in the NRC regulatory process are maintained at—
The NRC Technical Library
Two White Flint North
11545 Rockville Pike
Rockville, MD 20852–2738

These standards are available in the library for reference use by the public. Codes and standards are usually copyrighted and may be purchased from the originating organization or, if they are American National Standards, from—
American National Standards Institute
11 West 42nd Street
New York, NY 10036–8002
www.ansi.org
212–642–4900

Legally binding regulatory requirements are stated only in laws; NRC regulations; licenses, including technical specifications; or orders, not in NUREG-series publications. The views expressed in contractor-prepared publications in this series are not necessarily those of the NRC.

The NUREG series comprises (1) technical and administrative reports and books prepared by the staff (NUREG-XXXX) or agency contractors (NUREG/CR-XXXX), (2) proceedings of conferences (NUREG/CP-XXXX), (3) reports resulting from international agreements (NUREG/IA-XXXX), (4) brochures (NUREG/BR-XXXX), and (5) compilations of legal decisions and orders of the Commission and Atomic and Safety Licensing Boards and of Directors' decisions under Section 2.206 of NRC's regulations (NUREG-0750).

DISCLAIMER: This report was prepared under an international cooperative agreement for the exchange of technical information. Neither the U.S. Government nor any agency thereof, nor any employee, makes any warranty, expressed or implied, or assumes any legal liability or responsibility for any third party's use, or the results of such use, of any information, apparatus, product or process disclosed in this publication, or represents that its use by such third party would not infringe privately owned rights.

NUREG/IA-0439

International Agreement Report

TRACE Analysis on Heat Removal Decrease Accidents for AP1000

Prepared by:
Jong-Rong Wang, Kai Wang*, Hao-Tzu Lin, Chunkuan Shih*

Institute of Nuclear Energy Research, Atomic Energy Council, R.O.C.
1000, Wenhua Rd., Chiaan Village, Lungtan, Taoyuan, 325, Taiwan

*Institute of Nuclear Engineering and Science, National Tsing Hua University
101 Section 2, Kuang Fu Rd., HsinChu, Taiwan

K. Tien, NRC Project Manager

Division of Systems Analysis
Office of Nuclear Regulatory Research
U.S. Nuclear Regulatory Commission
Washington, DC 20555-0001

Manuscript Completed: September 2013
Date Published: March 2014

Prepared as part of
The Agreement on Research Participation and Technical Exchange
Under the Thermal-Hydraulic Code Applications and Maintenance Program (CAMP)

Published by
U.S. Nuclear Regulatory Commission

ABSTRACT

This research presents the applicability of TRACE to simulate AP1000's heat removal decrease accidents. The AP1000 nuclear power plant (NPP) TRACE model containing the essential components of the primary, secondary loop and passive safety systems with corresponding control systems is established through the interface code -SNAP based on the Westinghouse design. The steady-state calculation of TRACE is conducted to testify the accuracy of model and the results show a good coherent with the design parameters. Two condition II events categorized as the decrease in heat removal by secondary system are simulated and TRACE‘s results are consistent with Westinghouse's LOFTRAN results. The results of TRACE also reveal that the availability of reactor coolant pumps has a significant influence on the passive heat removal performance. Moreover, even without any AC power source, the passive core cooling system is capable of extracting all the core decay heat without the operator intervention. In conclusion, the passive safety system has a strong capability coping with the long-term heat removal decrease by secondary systems, further preventing the occurrence of severe consequences.

FOREWORD

The US NRC (United States Nuclear Regulatory Commission) is developing an advanced thermal hydraulic code named TRACE for nuclear power plant safety analysis. The development of TRACE is based on TRAC, integrating RELAP5 and other programs. NRC has determined that in the future, TRACE will be the main code used in thermal hydraulic safety analysis, and no further development of other thermal hydraulic codes such as RELAP5 and TRAC will be continued. A graphic user interface program, SNAP (Symbolic Nuclear Analysis Program) which processes inputs and outputs for TRACE is also under development. One of the features of TRACE is its capacity to model the reactor vessel with 3-D geometry. It can support a more accurate and detailed safety analysis of nuclear power plants. TRACE has a greater simulation capability than the other old codes, especially for events like LOCA.

Taiwan and the United States have signed an agreement on CAMP (Code Applications and Maintenance Program) which includes the development and maintenance of TRACE. INER (Institute of Nuclear Energy Research, Atomic Energy Council, R.O.C.) is the organization in Taiwan responsible for the application of TRACE in thermal hydraulic safety analysis, for recording user's experiences of it, and providing suggestions for its development. To meet this responsibility, the TRACE model of AP1000 NPP has been built. In this report, we focus on the TRACE analysis of the heat removal decrease accidents for AP1000.

CONTENTS

Page

ABSTRACT iii

FOREWORD v

CONTENTS vii

FIGURES ix

TABLES xi

EXECUTIVE SUMMARY xiii

ABBREVIATIONS xv

1. INTRODUCTION 1-1

2. AP1000 TRACE MODEL 2-1
- **2.1 Model Description** 2-1
- **2.2 Steady State Calculation** 2-2

3. SIMULATION OF TWO HEAT REMOVAL DECREASE ACCIDENTS 3-1
- **3.1 Accident Assumptions and Description** 3-1
- **3.2 Loss of Normal Feedwater Flow** 3-1
- **3.3 Loss of AC Power to Plant Auxiliaries** 3-2
- **3.4 Discussion** 3-2
- **3.5 The Sensitivity Study on Influence of Different Decay Heat Generation** 3-3

4. CONCLUSIONS 4-1

5. REFERENCES 5-1

FIGURES

Page

Figure 1 **The overview of AP1000 TRACE model** 2-3

Figure 2 **The control systems in AP1000 model** 2-4

Figure 3 **AP1000 SNAP animation model** 2-4

Figure 4 **Normalized RCS volumetric flow rate (loss of normal feedwater flow)** 3-4

Figure 5 **Normalized PRHR heat flux and CMT injection flow rate (loss of normal feedwater flow)** 3-4

Figure 6 **RCS temperature in loop containing the PRHR (loss of normal feedwater flow)** 3-5

Figure 7 **Normalized PRHR and core power (loss of normal feedwater flow)** 3-5

Figure 8 **Normalized RCS volumetric flow rate (loss of AC power to the plant auxiliaries)** 3-6

Figure 9 **Normalized PRHR heat flux and mass flow rate of PRHR and CMT injection (loss of AC power to the plant auxiliaries)** 3-6

Figure 10 **SG inventory (loss of AC power to the plant auxiliaries)** 3-7

Figure 11 **RCS temperature in loop containing the PRHR (loss of AC power to the plant auxiliaries)** 3-7

Figure 12 **Normalized PRHR and core power (loss of AC power to the plant auxiliaries)** 3-8

Figure 13 **Sensitivity study on different decay heat generation (loss of AC power to the plant auxiliaries)** 3-8

TABLES

Page

Table 1 Comparison of steady state calculated results 2-5

Table 2 Sequence for loss of normal feedwater flow event 3-9

Table 3 Sequence for loss of AC power to the plant auxiliaries 3-9

EXECUTIVE SUMMARY

An agreement in 2004 which includes the development and maintenance of TRACE has been signed between Taiwan and USA on CAMP. INER is the organization in Taiwan responsible for applying TRACE to thermal hydraulic safety analysis in order to provide users' experiences and development suggestions. To fulfill this responsibility, the TRACE model of Maanshan Nuclear Power Station is developed by INER.

According to the TRACE user's manual, it is the product of a long term effort to combine the capabilities of the NRC's four main systems codes (TRAC-P, TRAC-B, RELAP5 and RAMONA) into one modernized computational tool. Therefore, in the future, NRC has ensured that TRACE will be the main code used in thermal hydraulic safety analysis, without further development of other thermal hydraulic codes such as RELAP5 and TRAC. Besides, the 3-D geometry model of reactor vessel is one of the features of TRACE. It can support a more accurate and detailed safety analysis of NPPs.

The safety analysis of the nuclear power plant (NPP) is very important work in the NPP safety. Especially after the Fukushima NPP event occurred, the importance of NPP safety analysis has been raised and there is more concern for the safety of the NPPs in the world. AP1000 (Generation III + reactor) developed by Westinghouse Company is a two-loop 1000MWe pressurized water reactor (PWR). Passive safety systems are used to provide significant improvements in plant simplification, safety, reliability, investment protection and plant costs. AP1000's safety performance has been verified by extensive testing, safety analysis and probabilistic safety assessments. The safe shutdown conditions could be established and maintained in AP1000 NPP for 72 hours without operator actions.

This research presents the applicability of TRACE to simulate AP1000's heat removal decrease accidents. The AP1000 NPP TRACE model containing the essential components of the primary, secondary loop and passive safety systems with corresponding control systems is established through the interface code -SNAP based on the Westinghouse design. The steady-state calculation of TRACE is conducted to testify the accuracy of model and the results show a good coherent with the design parameters. Two condition II events categorized as the decrease in heat removal by secondary system are simulated and TRACE's results are consistent with Westinghouse's LOFTRAN results. The results of TRACE also reveal that the availability of reactor coolant pumps has a significant influence on the passive heat removal performance. Moreover, even without any AC power source, the passive core cooling system is capable of extracting all the core decay heat without the operator intervention. In conclusion, the analysis results of TRACE indicate that the PXS provides the sufficient capacity to establish and maintain the long-term core cooling for the plant without human intervention and AC power. Severe consequences in Fukushima disaster, such as the core uncovery, could be prevented or mitigated.

ABBREVIATIONS

AC	Alternating current
ACC	Accumulator
ADS	Automatic depressurization system
CAMP	Code Applications and Maintenance Program
CMT	Core makeup tank
DVI	Direct vessel injection
ESF	Engineering safety feature
HX	Heat exchanger
INER	Institute of Nuclear Energy Research
IRWST	Incontainment refueling water storage tank
LOCA	Loss-Of-Coolant Accident
MSIV	Main Steam Isolation Valve
NPP	Nuclear Power Plant
PCS	Passive containment cooling system
PMS	Protection and safety monitoring system
PRHR	Passive residual heat removal
PWR	Pressurized water reactor
PXS	Passive core cooling system
RCP	Reactor coolant pumps
RCS	Reactor coolant system
RPV	Reactor pressure vessel
SG	Steam generator
SNAP	Symbolic Nuclear Analysis Package
TRACE	TRAC/RELAP Advanced Computational Engine
USNRC	U.S. Nuclear Regulatory Commission

1. INTRODUCTION

The 2011 accident of Fukushima NPP in Japan was the worst nuclear disaster since the 1986 Chernobyl accident. The tsunami following an earthquake wiped out any available AC power sources and the core residual heat was not removed successfully, which further induced a series of severe consequences such as reactor core melting and radioactive release. Therefore, after the Fukushima NPP event occurred, the importance of NPP safety analysis has been raised and there is more concern for the safety of the NPPs in the world.

AP1000 (Generation III + reactor) developed by Westinghouse Company is a two-loop 1000MWe pressurized water reactor (PWR). Passive safety systems, which utilize natural driving forces such as gravity, natural circulation, and compressed gas-simple physical principles, have been applied into the AP1000 NPP design to achieve the objective that it could establish the safety shutdown condition and maintain long-term core cooling effectively and sufficiently, without the operator intervention or even any AC power support [1].

In the previous research, RELAP5/MOD3 code was mainly adopted to implement the AP1000's simulation [2][3]. As a new generation and advanced system code developed by the US NRC, TRACE (TRAC/RELAP Advanced Computational Engine) code is utilized in this study to analyze thermal-hydraulic behavior in AP1000. This code has been world-widely applied and demonstrated its excellent accuracy [4][5]. SNAP (Symbolic Nuclear Analysis Package) as a graphic user interface code is employed for editing the input decks and exhibiting the simulation results straightforwardly. Code versions used in this study are SNAP v 2.2.1 and TRACE v 5.0p3.

Former analyses mainly focused on the AP1000's ability coping with loss of coolant accident (LOCA) and the relevant thermal hydraulic phenomena [2][6]. Passive containment cooling performance responding to LOCA was analyzed by applying different containment codes [7]. Long-term heat removal issue in AP1000, however, has not been fully discussed in open literature. Considering the Fukushima accident, it is worthwhile to investigate the effectiveness of AP1000's passive safety systems resolving the long-term cooling problem and evaluate its safety margin. Therefore, two condition II events, loss of normal feedwater flow and loss of AC power to the station auxiliaries, are simulated, both of which are categorized as the decrease in heat removal by secondary system based on Westinghouse description [8]. Not considering the actuation of normal control systems, the passive safety systems become the only approach to remove the long-term decay heat and prevent the reactor from overpressurized and core melting.

Based on Westinghouse design information, the AP1000 TRACE model including the primary loop, secondary loop and passive core cooling system (PXS) has been developed. The corresponding control systems are added to obtain a steady-state condition as well as to simulate the accidental transient. In order to achieve more realistic results, a novel two-vessel approach is adopted to model the reactor pressure vessel (RPV) with 3D geometry nodalization. A steady-state calculation is thereafter executed to investigate the model conformity with the design. Two condition II events mentioned previously are simulated and the results are compared with that calculated by Westinghouse's LOFTRAN code to gain the information about the reproducibility. The impact of the availability of the reactor coolant pumps on the cooling performance of passive safety systems is discussed. Sensitivity study about the different decay heat generation is implemented to evaluate the influence of the differing fuel burnup conditions on the passive residual heat removal (PRHR) capability.

2. AP1000 TRACE MODEL

2.1 Model Description

AP1000 NPP TRACE model can be divided into three parts: the primary loop, the secondary loop and passive safety systems. The primary loop or the reactor coolant system (RCS) consists of two heat transfer circuits, with each circuit containing one steam generator (SG), two reactor coolant pumps (RCP), a single hot leg and two cold legs. The pressurizer is attached to the loop A's hot leg. The secondary loop includes the necessary valves like main steam isolate valves (MSIV) and safety valves connected to the main steam piping. The passive safety systems are made up of two sub-systems: the passive core cooling system (PXS) and the passive containment cooling system (PCS). PXS comprises PRHR loop, the safety injection loop from core makeup tanks (CMT), accumulators (ACC), incontainment refueling water storage tank (IRWST), and automatic depressurization system (ADS) loop. These loops provide core residual heat removal, safety injection, and controlled depressurization for reactor. PCS affords the safety-related ultimate heat sink for the plant and the residual heat is finally transferred to the outside atmosphere by the natural circulation. An overview of the AP1000 NPP model is presented in Figure 1.

AP1000 RPV adopts a special four-inlet-two-outlet structure, which is simulated with 3D cylindrical geometry in TRACE. Due to the hot leg, cold leg and direct vessel injection (DVI) pipe at the different elevations, a two-vessel approach is applied to fulfill a more realistic geometry. The vessel simulating the downcomer portion is connected to that simulating the core part through the vessel junction. Connected to the hot legs, the vessel simulating the core portion divides into 15 levels in the axial direction, 2 rings in the ‘‘r” direction and 8 equal azimuthal sectors in the ‘‘θ” direction. The guide tubes between the 12th and 16th layer simulate core bypass flow and the heat structure component generating the core power is added into the fuel region between the 1st and 10th layer. With the cold legs and two DVI lines attached, the vessel modeling the downcomer portion has the identical division method except the different layer's width and elevation. DVI lines connect PXS to the vessel for achieving the passive safety function. The RPV node diagram is exhibited in Figure 1.

SG model includes several parts: the primary side with U tubes, and the secondary side including the downcomer, boiler part, upper head. These parts are simulated by PIPE components with the specific geometries. A separator component is used to achieve the vapor-water separation. Hundreds of heat transfer tubes in SG are lumped into one single PIPE component with a heat structure attached. The primary and secondary loop components such as hot leg and pressurizer are modeled with the PIPE and VALVE components in accordance with their specific geometries and features.

The PRHR loop, including a heat exchanger (PRHR HX), is connected through RCS's hot leg to SG's channel head chamber in loop A. The IRWST provides the heat sink for the PRHR HX, absorbing decay heat from RCS and transferring it to the containment atmosphere when water reaches boiling temperature. When RCS suffers the leak and rupture of various sizes and locations, PXS uses three sources of water- the water of the CMTs, the ACC, and the IRWST- to prevent the occurrence of core uncovery through safety injection. The PXS also provides core depressurization via the four stages of ADS to permit a relatively slow, controlled RCS pressure reduction. These passive safety systems are modeled with the PIPE or VALVE components as well. PCS simulation is not discussed in this study. The reason is that the containment cooling involves the complex thermal–hydraulics and their propagation during accidents, which requires the special containment codes such as CONTAIN and COCOSYS to simulate its evaporation and condensation process. The simulation is not the concern in this research and it is replaced

by a simplified PCS makeup flow offered by the FILL component, which compensates the IRWST inventory loss when the water evaporates out of IRWST.

The control systems are categorized into three types: normal plant control, reactor trip and engineering safety feature (ESF) trip. The normal plant control system is a nonsafety-related system that provides control and coordination of the plant during startup, ascent to power, power operation, and shutdown conditions. In this study, pressurizer pressure and water level control are modeled to acquire a steady-state operation condition. Reactor trip is a protective function performed by the protection and safety monitoring system (PMS). When it anticipates a potential threat which generates the signal deviating from the reactor safety limit, the reactor trip along with the ESF trips actuates a series of related passive safety systems to bring the reactor into safety shutdown condition and prevent any possible core damage. These logic functions are achieved by using diverse signal variables, control blocks and trip units. An overview of the plant control systems are shown in Figure 2.

2.2 Steady State Calculation

Since some detail design information on AP1000 are proprietary, the reasonable assumptions are employed in the analysis and a trial-and-error approach is adopted to adjust some unknown parameters for a desired condition. This steady-state condition is achieved through the pressurizer water level and pressure control systems. Constant feedwater boundary is used so far to supply the water flow at 100% rated power. It will be evolved into SG water level control system achieving the match between feedwater flow and steam flow in future. The comparison of the results calculated by TRACE code with the design is listed in Table 1, which demonstrates a good agreement. In addition, these parameters can be observed directly from the animation mode shown in Figure 3, which helps better understand the simulation results. After the desired condition is achieved, the model is modified slightly to simulate transient accidents from a restart time setpoint of previous steady-state calculation.

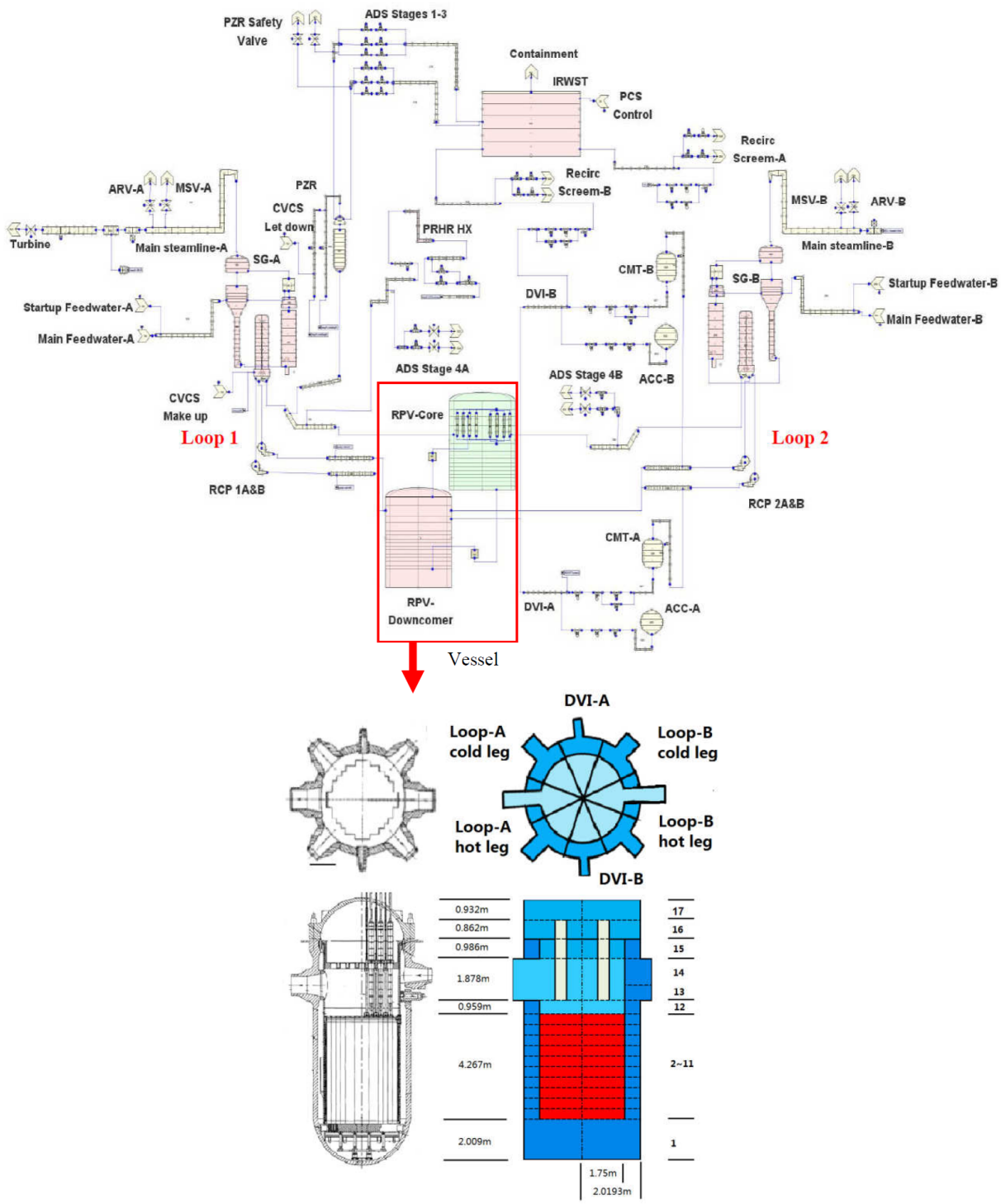

Figure 1 The overview of AP1000 TRACE model

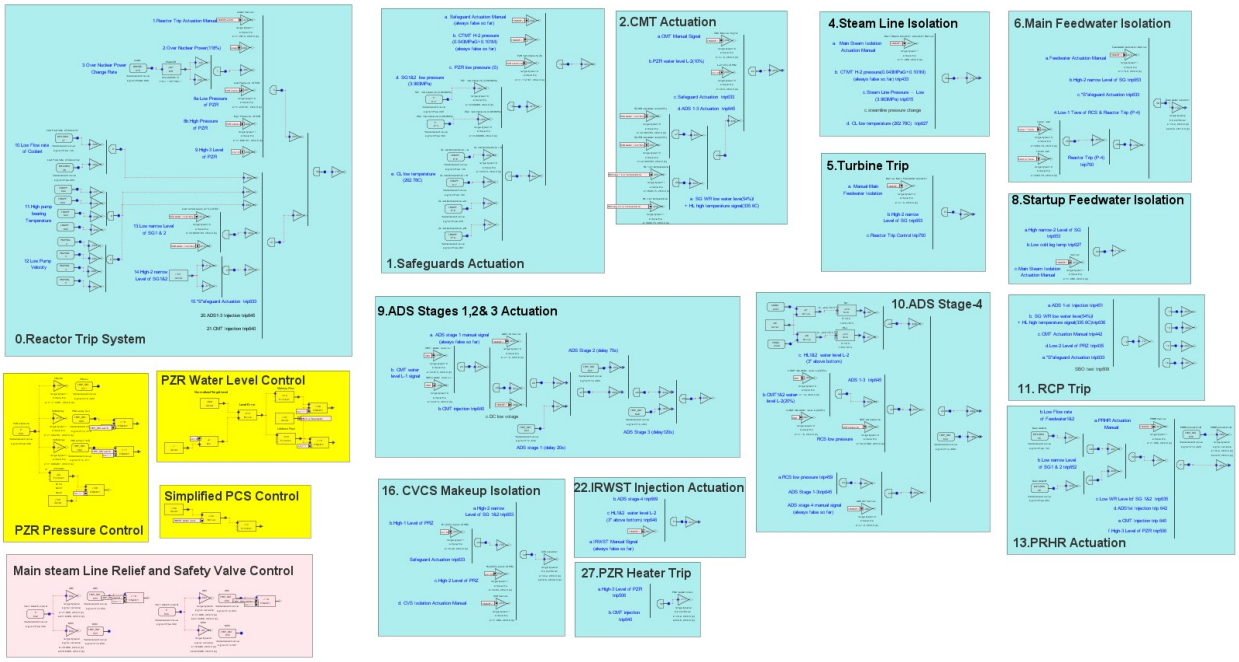

Figure 2 The control systems in AP1000 model

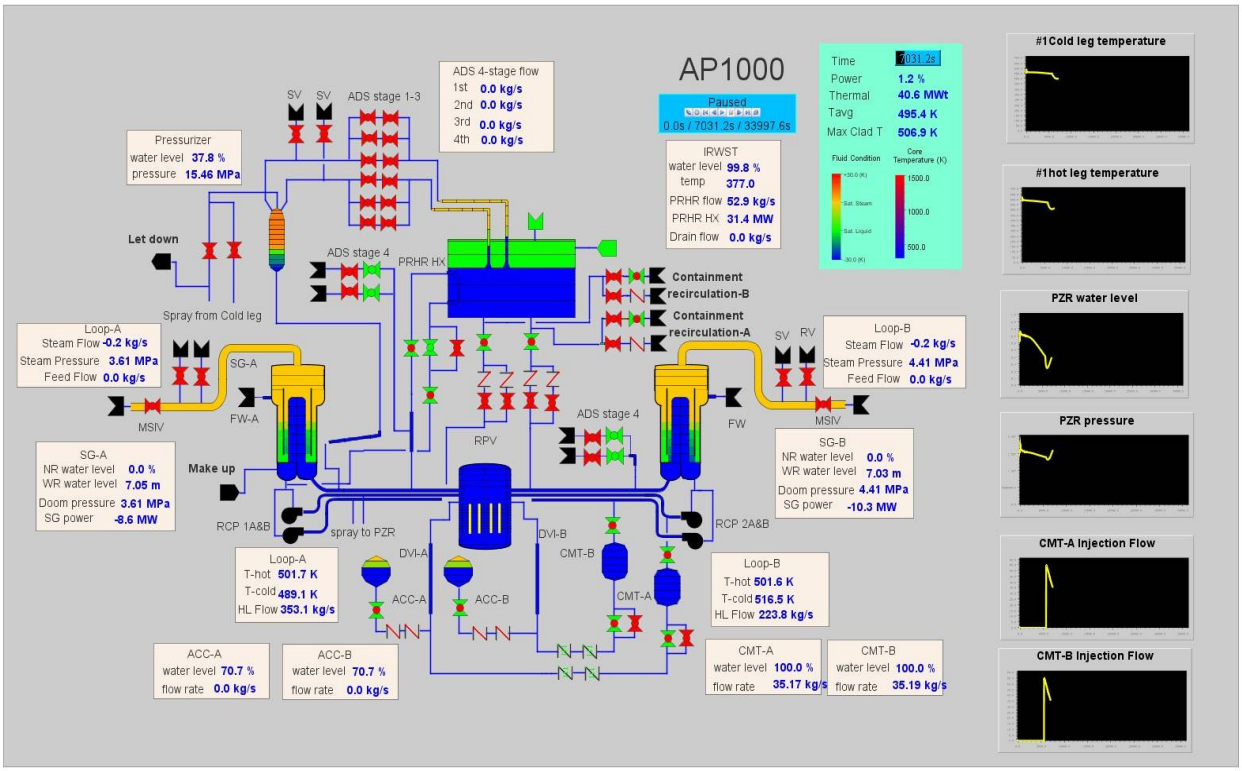

Figure 3 AP1000 SNAP animation model

Table 1 Comparison of steady state calculated results

Parameters	TRACE value	Rated value
Licensed core power (MW)	3415	3415
Coolant volume flow per loop (kg/sec)	7572	7578.3
Pressurizer pressure (MPa)	15.42	15.45
Pressurizer water (volume/m^3)	28.317	28.347
Cold leg temperature (K)	553.7	553.4
Cold leg pressure(MPa)	15.927	16.00
Hot leg temperature (K)	594	594.4
Hot leg pressure(MPa)	15.499	15.56
Coolant average temperature (K)	573.85	573.9
Steam flow per SG (kg/sec)	943.72	943.4
SG steam outlet pressure (MPa)	5.764	5.76
SG power (MWt/unit)	1707.5	1707.3
SG secondary water mass(kg)	79722.49	76965.77
SG secondary steam volume (m^3)	147.871	151.03

3. SIMULATION OF TWO HEAT REMOVAL DECREASE ACCIDENTS

3.1 Accident Assumptions and Description

As condition II events, loss of normal feedwater flow and loss of AC power to the plant auxiliaries are categorized as the events which result in the decrease of the secondary systems' capability on removing the heat from reactor core. The loss of normal feedwater can be caused by pump failures, valve malfunctions, or loss of AC power sources. The loss of AC power to the plant auxiliaries is possibly caused by a complete loss of the offsite grid accompanied by a turbine-generator trip and the onsite standby AC power system is not credited to mitigate the accident. Several conservative assumptions used in analysis are as follows:

- The plant is initially operating at 102% of the rated power.
- Core residual heat generation is based on ANSI/ANS-5.1-1979, which is a conservative representation of the decay energy release rates.
- Feedwater loss is assumed at 10 sec for both of events.
- The startup feedwater system is unavailable, and normal plant control systems are not considered to function.
- One of two parallel valves in the PRHR and CMT outlet line fails to open. This is the worst single failure.
- Secondary system steam relief is achieved through the SG safety valves. The condenser is unavailable for turbine bypass.
- For loss of AC power to the plant auxiliaries accident, the offsite AC power is assumed to lose along with the reactor trip at 72 sec, which further induces RCPs to coastdown simultaneously. This assumption is more conservative than the case in which offsite power is lost at time zero. That is because under this assumption SG has a comparable lower water level when the reactor trip.
- The reactor coolant pumps (RCP) leakage is not assumed to happen.

For both of events, plant vital instruments and related valves' actuation are supplied by the Class 1E DC power. Based on the assumptions above, PXS becomes the only system which affords emergency core decay heat removal and brings the plant into the safety shutdown condition. The only difference between two events is that for loss of AC power to the plant auxiliaries, RCP stop rotating at the beginning which minimizes PRHR HX's heat removal performance. In addition, coolant flow necessary for core cooling and the residual heat removal has to initially rely on the natural circulation in the primary loop and PRHR loop. In order to assess the adequacy of PXS coping with the long-term accident, the simulation adopts the time interval of 36,000 seconds and a logarithmic time scale is utilized to observe the accidental transient behavior.

3.2 Loss of Normal Feedwater Flow

Event sequence for loss of normal feedwater flow is presented in Table 2. Based on the assumptions mentioned, the SG water inventory decreases as a consequence of the continuous steam supply to the turbine which leads to the reactor trip on a low SG water level signal at 72 sec. Due to unavailability of startup feedwater pump and normal plant control systems, a low SG water level signal (narrow range), coincident with a low startup feedwater flow rate signal, quickly activate the PRHR HX to transfer the core decay heat into the IRWST at about 130 sec. Because of the operation of RCPs, the reactor coolant volumetric flow plotted in Figure 4 remains at a high level until RCPs are tripped by the low Tcold “S” signal (The signal indicates the cold leg temperature reaches 533K following continuous cooling). After that, the coolant flow necessary for core cooling is maintained by the natural circulation between SG and reactor. Since the heat flux of PRHR HX in TRACE is higher than that in LOFTRAN, the termination time of RCPs calculated by TRACE is approximately 200 sec earlier than that by LOFTRAN. This can be seen from Figure 5. More residual heat is therefore extracted from the RCS, which

further lowers the coolant temperature at a faster speed. Figure 6 shows the coolant temperature from TRACE lies slightly below that from LOFTRAN during a period between 130 sec and 1000 sec. It therefore takes less time to reach low Tcold “S” signal. Another important behavior of PRHR HX during this period is that its heat flux slowly declines due to the RCS cooldown, but is still higher than the residual heat generation rate shown in Figure 7.

Once the low Tcold “S” signal is reached, the RCPs start to coastdown followed by the MSIV closure and CMT injection with several seconds delay. It can be seen in Figure 6 that the coolant temperature continues to decrease from 1000 sec to 2000 sec. During this transient, the CMTs operate in water recirculation mode. The CMT injection flow slowly decreases as the CMT fluid temperature increases due to water recirculation. The flow eventually disappears when the temperature difference between CMT fluid and RCS's coolant vanishes. This can be observed in Figure 5. Furthermore, it is worth noting that the CMT injection significantly diminishes the heat flux of the PRHR HX, which is represented in Figure 5 by a drastic drop appearing at the time of CMT injection. Due to this injection, the heat removal rate shown in Figure 7 goes below the core decay heat produced, which leads to the RCS heating up again. As the RCS temperature is elevated, the heat removal rate of the PRHR HX increases again until the heat extraction rate matches the core decay heat produced at about 17500 sec. Since then, this match presented in Figure 7 can be sufficiently maintained till the end of simulation.

3.3 Loss of AC Power to Plant Auxiliaries

From the decay heat removal point of view, in the long term this event is more severe than loss of normal feedwater flow. This is because, for this case, the decrease in heat removal by the secondary system is accompanied by a reactor coolant flow coastdown at the beginning, which further reduces the capability of the primary coolant to remove heat from the core. Table 3 lists the event sequence for loss of AC power to the plant auxiliaries accident. The reactor starts to shut down at 72 sec when the low SG water level signal is reached. Not considering the onsite AC power to support, offsite AC power is assumed to lose along with the reactor trip at 72 sec, which immediately result in the RCPs' coastdown. Low SG water level signal (narrow range), coincident with a low startup feedwater flow rate signal, motivates the PRHR loop to function at about 130s. Upon the loss of power to RCPs at the beginning, the primary loop has to initially depend on the natural circulation to sustain the essential coolant flow. This is reflected in Figure 8 by an obvious decline of RCS volumetric flow at 72 sec and roughly 8% of the initial flow maintained thereafter. The heat removal rate of PRHR presented in Figure 12 is far lower than the core heat generation rate between 130 sec and 2500 sec. The excessive heat need to be extracted by the SG through the natural circulation in the primary loop until the decay heat generation declines below the PRHR's removal rate at 2500 sec. The PRHR heat removal ability shown in Figure 9 remains relatively stable before the CMT injection. This is due to the relative constant natural circulation flow existing in primary loop and PRHR loop.

Although the PRHR HX shows a higher heat flux compared with the results predicted by LOFTRAN, the time of cold leg temperature reaching low Tcold “S” signal is approximately 2000s later than that calculated by LOFTRAN. The reason is that SG heat transfer efficiency predicted by TRACE model is lower than that by LOFTRAN. It can be seen in Figure 10 that the SG inventory from TRACE simulation lies higher than the results from LOFTRAN, which indicates less heat is extracted by SG's water. Therefore, a slightly higher cold leg temperature simulated by TRACE can be observed in Figure 11. Accompanied with the continuous core power decline and PRHR HX cooling, CMT injection is induced at about 7000 sec, which largely lowers the PRHR HX's heat flux. The injected flow reduces along with the rise of CMT fluid temperature due to water recirculation as well. RCS starts to heat up again as the result of the removal rate dropping below decay heat generation rate. As the RCS coolant temperature rises, PRHR HX's heat flux is subsequently elevated to match the decay heat generation. This match is achieved at roughly 19500s and a stable cooling condition is thereafter sustained.

3.4 Discussion

The analysis results above indicate that the availability of RCPs significantly affects the cooling performance of PRHR HX. Compared with the loss of AC power to auxiliaries accident, the heat transfer rate of PRHR HX can be raised from 0.02% to 0.05% in loss of normal feedwater flow accident through 130 sec to 1000 sec. Due to a higher extraction rate from systems, it takes less time to actuate the CMT injection on the low Tcold “S” signal. Moreover, the CMT injection accelerates the cooldown of plant, which is reflected by a drastic drop in both cold leg and hot leg temperature following the injection.

As the plant gradually cools down, PRHR HX heat removal rate exceeds the decay heat produced before CMT injection for both cases. The cold water injected by the CMTs greatly lowers the heat transfer of PRHR HX since the injection provides alternative core cooling through the water recirculation. The process further benefits the system reaching the match between decay heat removal and production. It is worthwhile to stress that PRHR HX has the ability to accommodate this heat flux change caused by CMT injection. When the RCS coolant temperature increases due to the decreasing cooling effect from CMT, the heat transfer rate of PRHR HX is automatically elevated until it can completely match the decay heat produced. The operator intervention is entirely not required during the whole process, which reveals the inherent safety feature of PXS system. After the match is achieved, a long-term stable shutdown condition is established and maintained by PRHR loop. As long as the IRWST water level can be maintained, this stable condition can be indefinitely extended. Cooperating with PCS, it is achievable to sustain the IRWST inventory for a long time. Besides, this study proves that even though loss of any AC power supply occurs at the beginning, the PXS system has the adequacy in establishing and maintaining the long-term core cooling, preventing excessive heatup of RCS coolant.

3.5 The Sensitivity Study on Influence of Different Decay Heat Generation

From the beginning of cycle to the end of cycle, the differing fuel burnup has different decay heat generation rate. Therefore the sensitivity study is conducted to evaluate this influence on the PXS cooling performance. Three decay heat models with different heat generation curves presented in Figure 13 are adopted in the analysis. Model A represents the most conservative decay heat generation rate which has already been used in the analysis of section 3.2 and 3.3 Due to more severe condition the loss of AC power to plant auxiliaries accident has, it is essential to take this event for example. The CMT injection is actuated at different time because less time is taken when removing the smaller amount of the decay heat from the system and reaching the low Tcold “S” signal. Although the injection time differs, the match of decay heat production with PRHR HX removal rate is eventually achieved for all of models. PRHR cooling performance is even slightly stronger in Model B and C which indicates the adequate safety margin for cooling.

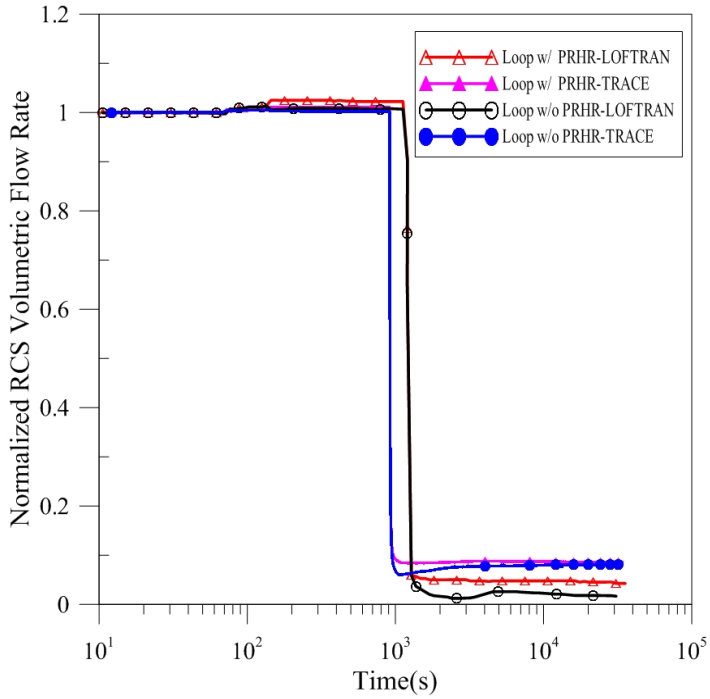

Figure 4 Normalized RCS volumetric flow rate (loss of normal feedwater flow)

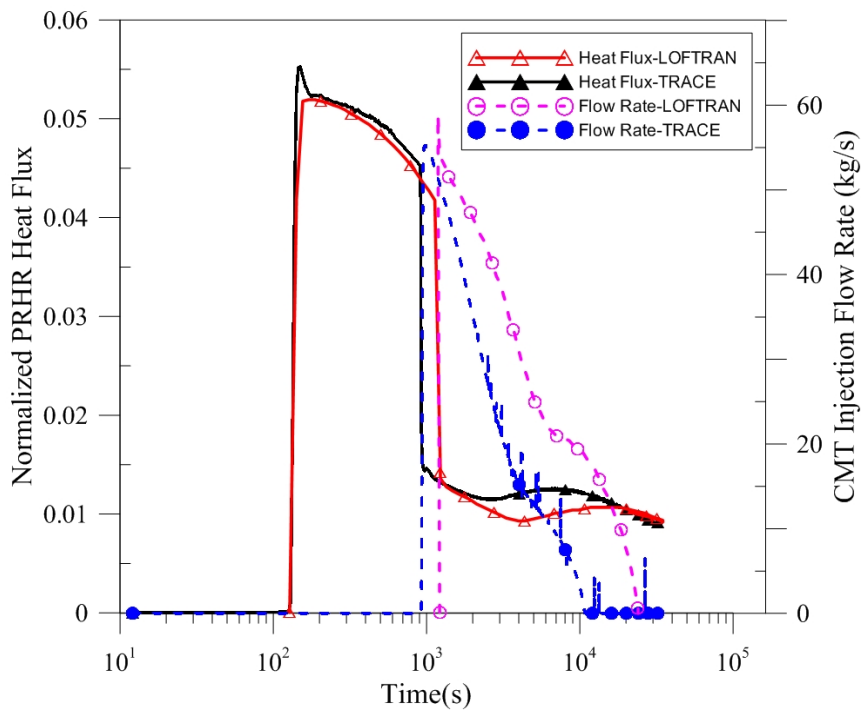

Figure 5 Normalized PRHR heat flux and CMT injection flow rate (loss of normal feedwater flow)

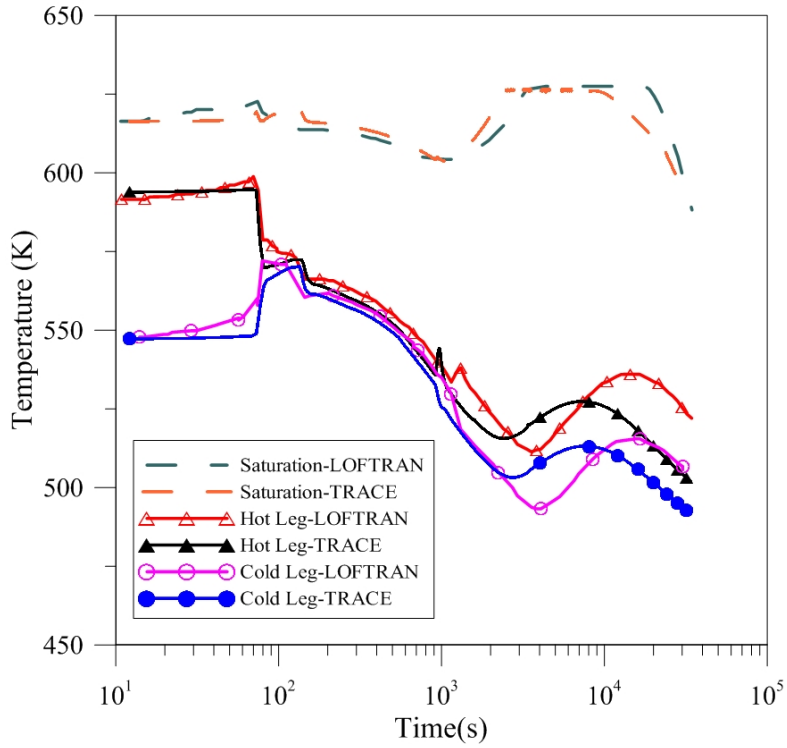

Figure 6 RCS temperature in loop containing the PRHR (loss of normal feedwater flow)

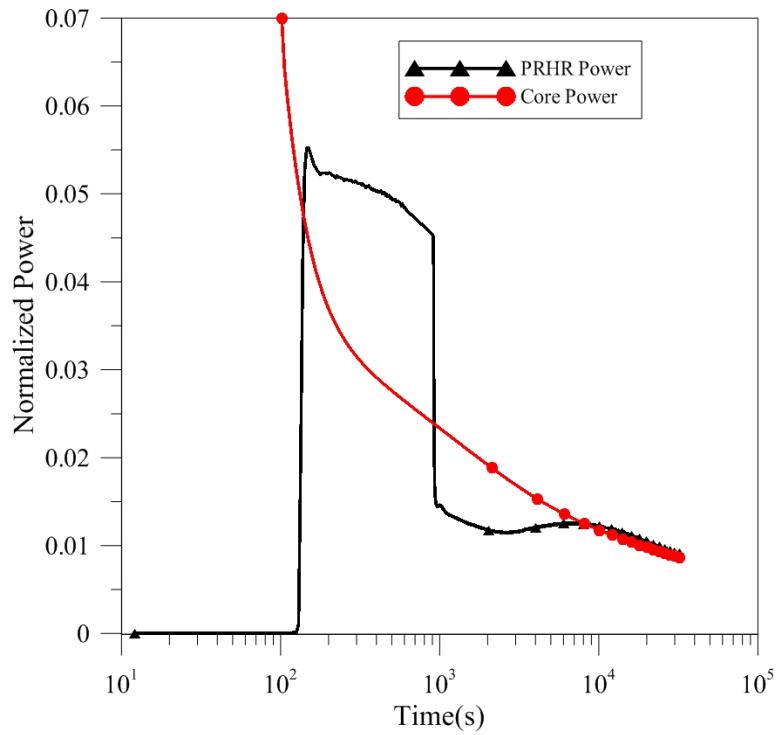

Figure 7 Normalized PRHR and core power (loss of normal feedwater flow)

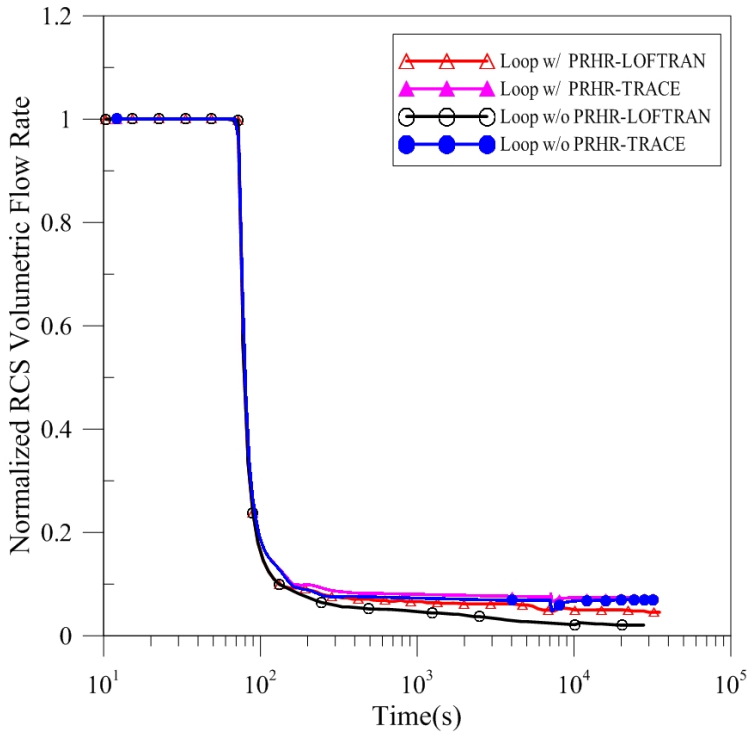

Figure 8 Normalized RCS volumetric flow rate (loss of AC power to the plant auxiliaries)

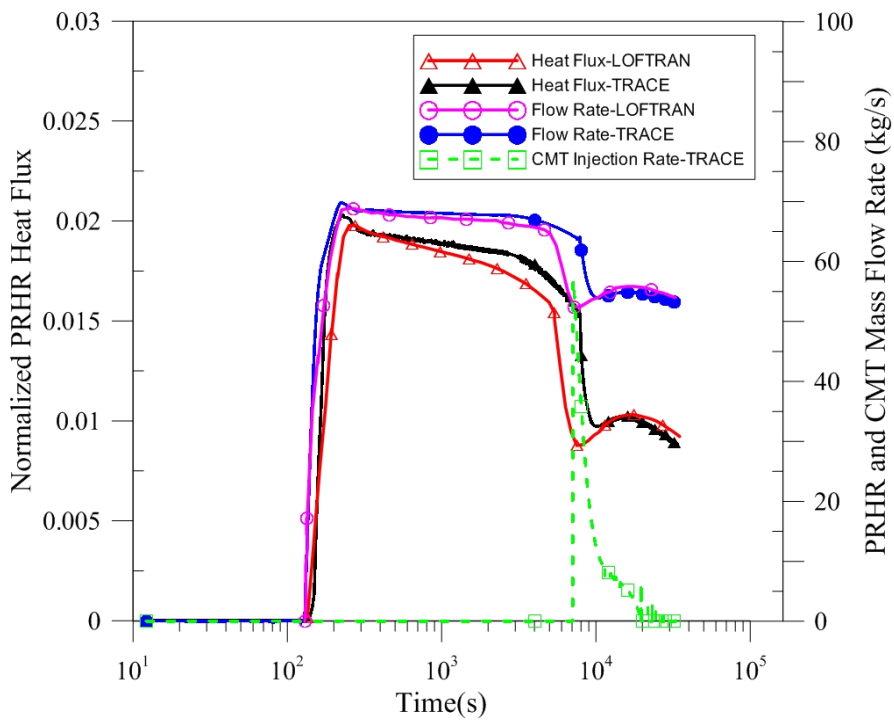

Figure 9 Normalized PRHR heat flux and mass flow rate of PRHR and CMT injection (loss of AC power to the plant auxiliaries)

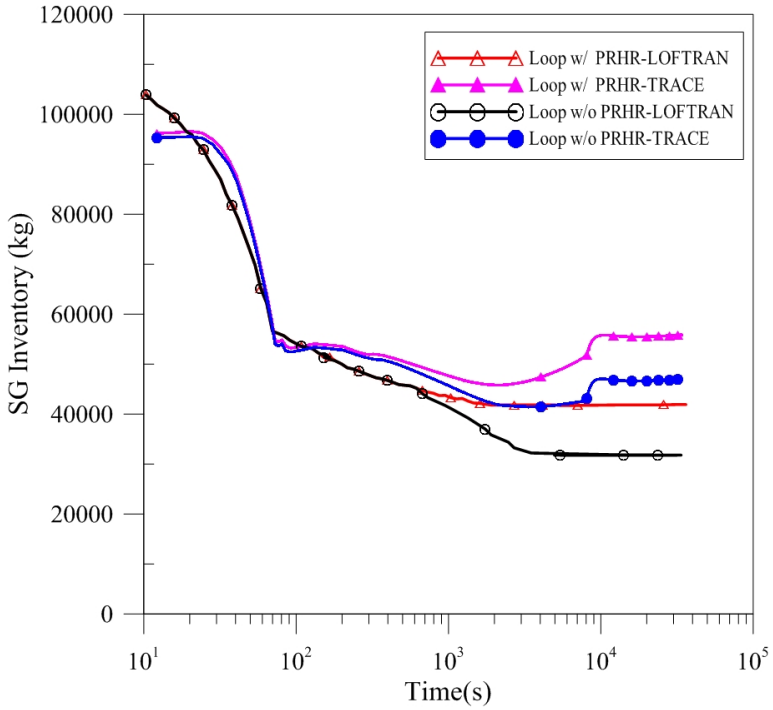

Figure 10 SG inventory (loss of AC power to the plant auxiliaries)

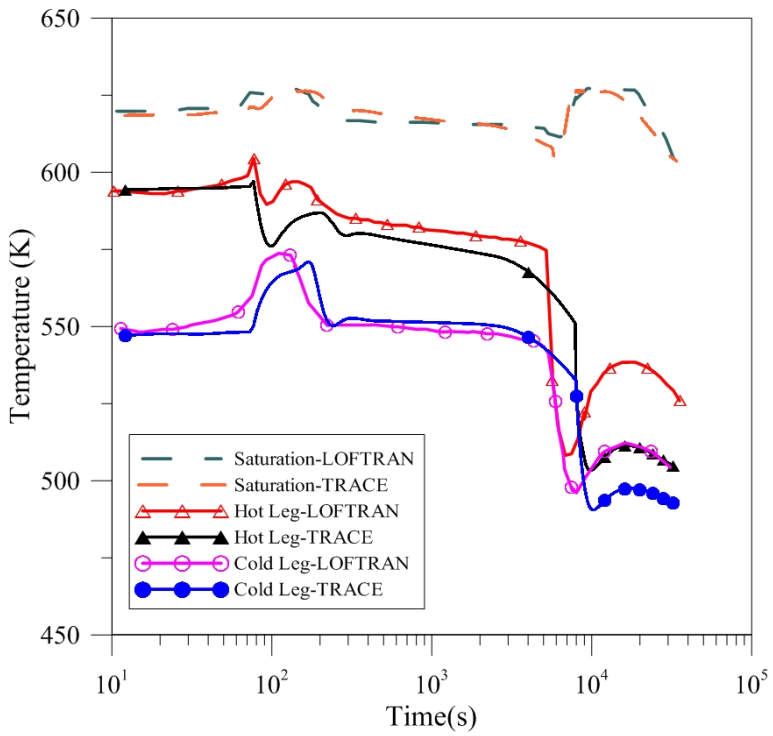

Figure 11 RCS temperature in loop containing the PRHR (loss of AC power to the plant auxiliaries)

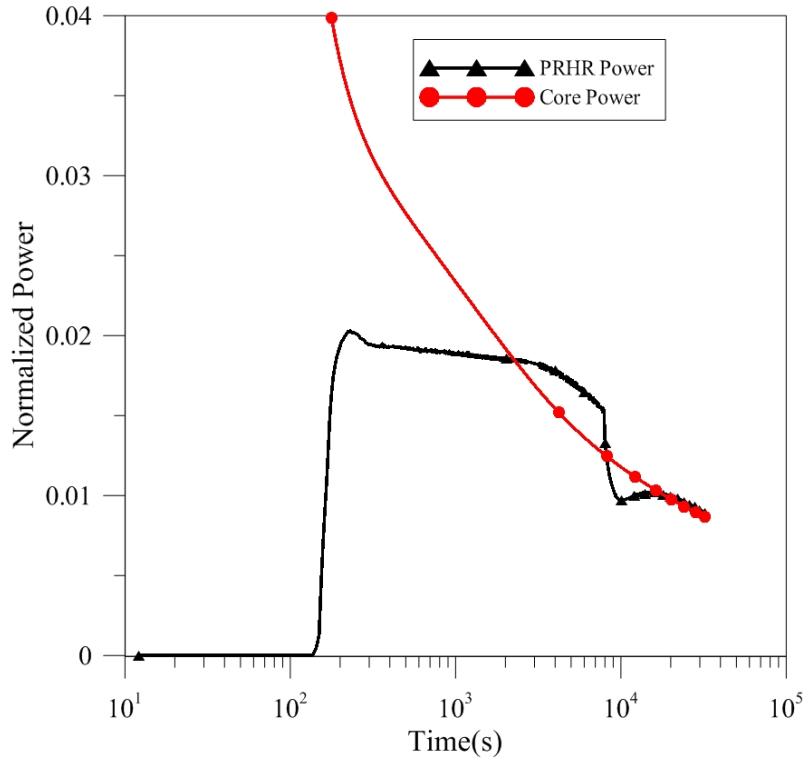

Figure 12 Normalized PRHR and core power (loss of AC power to the plant auxiliaries)

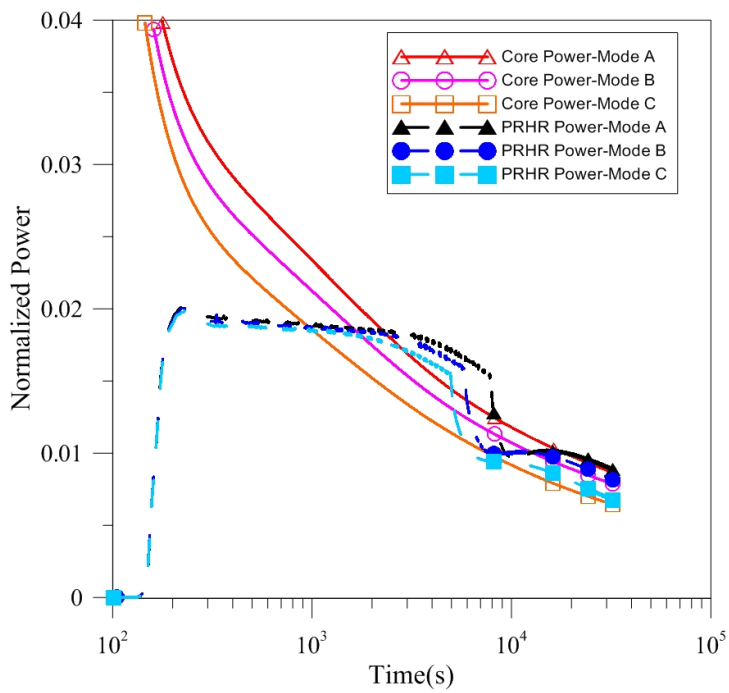

Figure 13 Sensitivity study on different decay heat generation (loss of AC power to the plant auxiliaries)

Table 2 Sequence for loss of normal feedwater flow event

Event	Time(s)	
	TRACE	LOFTRAN
Feedwater is lost	10.0	10.0
Low SG water level reactor trip set point is reached	68.9	70.4
Rods begin to drop	70.9	72.4
PRHR HX actuation on low SG water level (narrow range coincident with low start up flow rate)	125.7	132.4
Cold leg temperature reaches low Tcold setpoint	908.1	1154.6
Reactor coolant pump trip on low Tcold “S” signal	916.1	1160.6
Steam line isolation on low Tcold “S” signal	926.2	1166.6
Core makeup tank actuation on low Tcold “S” signal	928.2	1171.6
PRHR heat exchanger extracted heat matches decay heat	~17500	~17620

Table 3 Sequence for loss of AC power to the plant auxiliaries

Event	Time(s)	
	TRACE	LOFTRAN
Feedwater is lost	10.0	10.0
Low SG water level reactor trip set point is reached	70.2	70.4
Rods begin to drop, AC power is lost, RCPs start to coast down	72.2	72.4
PRHR HX actuation on low SG water level (narrow range coincident with low start up flow rate)	133.6	132.4
Core makeup tank actuation on low Tcold “S” signal	7078.3	4753
Steam line isolation on low Tcold “S” signal	7086.3	4765
PRHR heat exchanger extracted heat matches decay heat	~19500	~19100

4. CONCLUSIONS

In this study, AP1000 TRACE model is constructed and assessed against the Westinghouse data. In the evaluation of the steady state condition, the analytical results of TRACE show that the parameters have a good consistency with the Westinghouse design data. In transients' analysis, the comparison of TRACE and LOFTRAN results shows that the AP1000 TRACE model has a certain level of confidence for the simulation of condition II events. Some important conclusions can be drawn as follows:

- The availability of RCPs has a significant impact on the cooling performance of PRHR HX. The heat transfer rate of PRHR HX can be drastically raised if RCPs continue to operate after the reactor trip, which accelerates the plant cooldown.
- CMT injection provides another core cooling approach and speeds up the cooldown of plant which further benefits the match between decay heat production and removal.
- PRHR HX can accommodate the change of heat flux and finally extract all of the decay heat generation without the operator intervention and any AC power support.
- Natural circulation is successful established in both the primary loop and PRHR loop, providing the sufficient coolant flow necessary for core cooling.
- PXS can sustain this long-term core cooling efficiently without the operator intervention and any AC power support if the adequate water inventory of IRWST is ensured.
- PXS can cover the different heat generation rate during the differing fuel life cycle and shows a good safety margin.

In summary, the results of TRACE indicate that the PXS provides the sufficient capacity to establish and maintain the long-term core cooling for the plant without human intervention and AC power. Severe consequences in Fukushima disaster, such as the core uncovery, could be prevented or mitigated.

5. REFERENCES

1. Schulz, T.L., 2006. Westinghouse AP1000 advanced passive plant. Nuclear Engineering and Design, vol.236, pp.1547–1557.
2. W.W. Wang, et. al, 2011. Thermal hydraulic phenomena related to small break LOCAs in AP1000. Annals of Nuclear Energy, vol. 53, pp. 407-419.
3. D. Lioce, et. al, 2012. AP1000 passive core cooling system pre-operational tests procedure definition and simulation by means of Relap5 Mod. 3.3 computer code. Nuclear Science and Engineering, vol. 250, pp. 538–547.
4. J. Freixa, and A. Manera, 2010. Analysis of an RPV upper head SBLOCA at the ROSA facility using TRACE. Nuclear Engineering and Design, vol. 240, pp. 1779–1788.
5. Jong-Rong Wang, Hao-Tzu Lin , Yi-Hsiang Cheng, Wei-Chen Wang, Chunkuan Shih, 2011. TRACE modeling and its verification using Maanshan PWR start-up tests. Annals of Nuclear Energy, 36, pp. 527–536.
6. J. Yang, et. al, 2012. Simulation and analysis on 10-in. cold leg small break LOCA for AP1000. Annals of Nuclear Energy, vol. 46, pp. 81–89.
7. Philipp Broxtermann, Hans-Josef Allelein., 2012. Simulation of AP1000's passive containment cooling with the German Containment Code System COCOSYS. Nuclear Engineering and Design, In Press, Corrected Proof. Available online 13 December.
8. The AP1000 European DCD, 2007a. UK AP1000 Safety, Security and Environmental Report. [Online]Available at: https://www.ukap1000application.com/doc_pdf_library.aspx.

NRC FORM 335
(9-2004)
NRCMD 3.7

U.S. NUCLEAR REGULATORY COMMISSION

BIBLIOGRAPHIC DATA SHEET

(See instructions on the reverse)

1. REPORT NUMBER
(Assigned by NRC, Add Vol., Supp., Rev., and Addendum Numbers, if any.)

NUREG/IA-0439

2. TITLE AND SUBTITLE
TRACE Analysis on Heat Removal Decrease Accidents for AP1000

3. DATE REPORT PUBLISHED

MONTH	YEAR
March	2014

4. FIN OR GRANT NUMBER

5. AUTHOR(S)
Jong-Rong Wang, Kai Wang*, Hao-Tzu Lin, Chunkuan Shih*

6. TYPE OF REPORT
Technical

7. PERIOD COVERED *(Inclusive Dates)*

8. PERFORMING ORGANIZATION - NAME AND ADDRESS *(If NRC, provide Division, Office or Region, U.S. Nuclear Regulatory Commission, and mailing address; if contractor, provide name and mailing address.)*

Institute of Nuclear Energy Research
Atomic Energy Council, R.O.C.
1000, Wenhua Rd., Chiaan Village, Lungtan, Taoyuan, 325
Taiwan

*Institute of Nuclear Engineering and Science
National Tsing Hua University
101 Section 2, Kuang Fu Rd., HsinChu
Taiwan

9. SPONSORING ORGANIZATION - NAME AND ADDRESS *(If NRC, type "Same as above"; if contractor, provide NRC Division, Office or Region, U.S. Nuclear Regulatory Commission, and mailing address.)*

Division of Systems Analysis
Office of Nuclear Regulatory Research
U.S. Nuclear Regulatory Commission
Washington, DC 20555-0001

10. SUPPLEMENTARY NOTES
K. Tien, NRC Project Manager

11. ABSTRACT *(200 words or less)*

This research presents the applicability of TRACE to simulate AP1000's heat removal decrease accidents. The AP1000 nuclear power plant (NPP) TRACE model, containing the essential components of the primary, secondary loop and passive safety systems with corresponding control systems, is established through the interface code SNAP based on the Westinghouse design. The steady-state calculation of TRACE is conducted to testify the accuracy of model and the results show a good coherent with the design parameters. Two condition II events categorized as the decrease in heat removal by secondary system are simulated and TRACE's results are consistent with Westinghouse's LOFTRAN results. The results of TRACE also reveal that the availability of reactor coolant pumps has a significant influence on the passive heat removal performance. Moreover, even without any AC power source, the passive core cooling system is capable of extracting all the core decay heat without the operator intervention. In conclusion, the passive safety system has a strong capability coping with the long-term heat removal decrease by secondary systems, further preventing the occurrence of severe consequences.

12. KEY WORDS/DESCRIPTORS *(List words or phrases that will assist researchers in locating the report.)*
TRACE
Westinghouse AP1000 NPP
Code Application & Maintenance Program (CAMP)
INER (Institute of Nuclear Energy Research, Atomic Energy Council, R.O.C.)
Thermal hydraulic safety analysis
Taiwan
SNAP

13. AVAILABILITY STATEMENT
unlimited

14. SECURITY CLASSIFICATION
(This Page)
unclassified
(This Report)
unclassified

15. NUMBER OF PAGES

16. PRICE

PRINTED ON RECYCLED PAPER

Printed
on recycled
paper

Federal Recycling Program

UNITED STATES
NUCLEAR REGULATORY COMMISSION
WASHINGTON, DC 20555-0001

OFFICIAL BUSINESS