U.S. DEPARTMENT OF ENERGY | Nuclear Energy

DOE Cask Monitoring Development

Public Meeting at the Nuclear Regulatory Commission

Sylvia Saltzstein, Sandia National Laboratories
Steve Marschman, Idaho National Laboratory
Brady Hanson, Pacific Northwest National Laboratory

March 6, 2014
White Flint, Maryland

U.S. DEPARTMENT OF ENERGY

Nuclear Energy

Agenda

- **Overview of today's meeting**
  - Meeting Objective
  - Status DOE/EPRI demo project relative to sampling
  - Functional criteria for sampling

- **Describe a variety of conceptual sampling concepts**
  - Get feedback from industry and NRC
  - Each will be rated per the functional criteria

www.storenuclearfuel.com

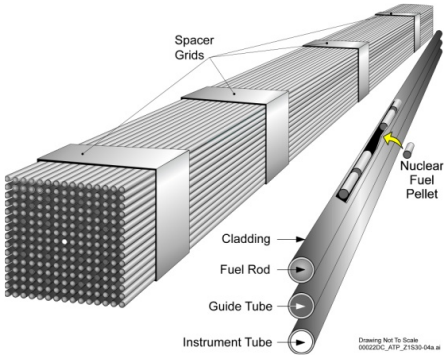

http://energy.gov/sites/prod/files/styles

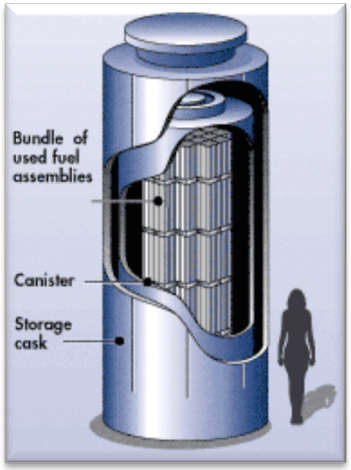

www.nrc.gov/waste/spent-fuel-storage

Meeting Objective

The purpose of this meeting is for the DOE to present conceptual ideas that might be used:

- To gather data from the inside of the HBU Dry Storage Demonstration Cask during the storage period.
- For other storage casks or canisters in the future

Of interest:

- The internal cask atmosphere
  - Analyze for water vapor, fission gas, potentially oxygen, hydrogen, helium
- The cask internal temperature
  - Redundancy or replacement for thermocouples
- The interior, bottom of the cask
  - To check for any free water than might somehow exist beyond fuel drying

The feedback received from this meeting will assist DOE in selecting technologies that may be proposed to the NRC during the licensing process.

- Technologies presented today will be conceptual
- There is no assurance that any of these ideas will be implemented for the DOE/EPRI High Burnup Dry Storage Demonstration cask
- Intent is to gather feedback on these conceptual ideas for guidance on further development

HOW WE GOT TO THIS POINT

U.S. DEPARTMENT OF ENERGY

Nuclear Energy

Status: 1. Develop Test Plan

EPRI developed a draft test plan for the demonstration that was submitted to DOE in October . That plan:

- ***proposed gas sampling in the North Anna transfer building for up to two weeks after loading and drying***
- ***explicitly stated that no gas sampling would occur once the cask was taken out to the dry storage pad***

3.3.3 "…Long-term storage period: no cask cavity gas pressure or gas sampling is proposed…"
Draft Test Plan, Rev 4, 10/31/2013

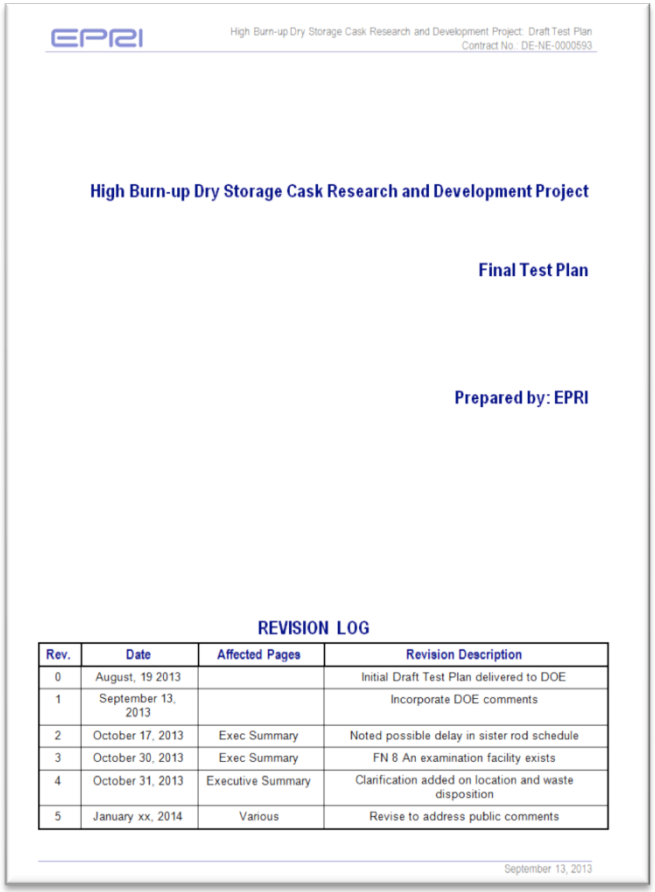

EPRI

High Burn-up Dry Storage Cask Research and Development Project: Draft Test Plan
Contract No.: DE-NE-0000593

High Burn-up Dry Storage Cask Research and Development Project

Final Test Plan

Prepared by: EPRI

REVISION LOG

Rev.	Date	Affected Pages	Revision Description
0	August, 19 2013		Initial Draft Test Plan delivered to DOE
1	September 13, 2013		Incorporate DOE comments
2	October 17, 2013	Exec Summary	Noted possible delay in sister rod schedule
3	October 30, 2013	Exec Summary	FN 8 An examination facility exists
4	October 31, 2013	Executive Summary	Clarification added on location and waste disposition
5	January xx, 2014	Various	Revise to address public comments

September 13, 2013

U.S. DEPARTMENT OF ENERGY

Nuclear Energy

Status: 2. 30-day Public Comment

The draft test plan was put out for a 30-day public comment period starting November 12th

- ***NRC responded that it would like to see gas sampling of the cask throughout the dry storage period once it is on the dry storage pad.***

Gas sampling analysis for fission gases, hydrogen, oxygen, and moisture are planned to be conducted only for the first few weeks after loading, then possibly at the end stage before shipment…This approach to gas monitoring significantly limits the potential value of this project, and may not address the gap of 'incipient' failure of cladding…

If rod breach occurs, the time of occurrence will be unknown. Rod failures could be detected in real time with frequent gas monitoring…

This demonstration program is designed to provide supporting information for current and future license renewal applications. Without gas monitoring, it will be difficult for applicants to utilize the results of the program for this purpose until the cask is transported, unloaded, and the rods are examined."

Letter from NRC (M. Lombard) to DOE (M. Bates), 12/12/13

67348 Federal Register / Vol. 78, No. 218 / Tuesday, November 12, 2013 / Notices

Issued in Washington, DC on November 6, 2013.

Patricia A. Hoffman,

Assistant Secretary, Office of Electricity Delivery and Energy Reliability.

[FR Doc. 2013–26976 Filed 11–8–13; 8:45 am]

BILLING CODE 6450–01–P

DEPARTMENT OF ENERGY

Invitation for Public Comment on Draft Test Plan for the High Burnup Dry Storage Cask Research and Development Project (CDP)

AGENCY: Fuel Cycle Technologies, Office of Nuclear Energy, Department of Energy.

ACTION: Notice; request for public comments.

SUMMARY: The U.S. Department of Energy (DOE) is providing notice of request for public comment on its draft test plan for the High Burnup Dry Storage Cask Research and Development Project (CDP). The test plan will guide the Department's activities, research, and development throughout the execution of the High Burnup Dry Storage Cask Research and Development Project. The draft test plan places its focus on "why" the project is being performed and "what" the Department plans to accomplish with the CDP. The details on "how" the test plan will be executed will be added when Dominion Virginia Power, who is part of the Electric Power research Institute (EPRI) team, submits a License Amendment Request for the existing North Anna Generating Station Independent Spent Fuel Storage Installation (ISFSI). The License Amendment Request will be submitted to the NRC in the future. The public will be provided an opportunity to provide comments to the NRC on the CDP test plan at that time. The DOE's Office of Used Nuclear Fuel Disposition Research and Development has coordinated this effort in collaboration with its contractor EPRI and several DOE national laboratories. The DOE is seeking public stakeholder comment to ensure CDP resources are invested wisely to achieve measurable improvements in our Nation's data on High Burnup Casks.

DATES: Written comments should be submitted by December 12, 2013. Comments received after this date will be considered if it is practical to do so; however, the DOE is only able to ensure consideration of comments received on or before this date.

ADDRESSES: You may submit comments by any of the following methods:

Electronic Form: Go to *http://www.id.energy.gov/insideNEID/PublicInvolvement.htm.* Locate the area on the page that pertains to the draft test plan for the High Burnup Dry Storage Cask Research and Development Project (CDP). Click on the link for the electronic comment form. Populate the form and click on "Submit".

E-Mail: CDP@id.doe.gov.

Mail: U.S. Department of Energy, C/O Melissa Bates, 1955 Freemont Ave., MS 1235, Idaho Falls, ID 83415.

Hand Delivery or Courier: U.S. Department of Energy, Willow Creek Building Ground Floor, Room 185B, 1955 Fremont Ave., Attn: Melissa Bates, Idaho Falls, ID, between 8 a.m. and 3:30 p.m. MT, Monday through Thursday, except Federal holidays.

Fax: 208–526–6249.

FOR FURTHER INFORMATION CONTACT: Mrs. Melissa Bates, Contracting Officers Representative, High Burnup Dry Storage Cask Research and Development Project, U.S. Department of Energy—Idaho Operations Office, MS 1235, 1955 Fremont Ave., Idaho Falls, ID 83415, (208) 526–4652, *batesmc@id.doe.gov.*

SUPPLEMENTARY INFORMATION: The Department of Energy (DOE) has performed recent assessments focusing on long-term aging issues important to the performance of the structures, systems, and components of the dry cask storage systems for high burnup spent nuclear fuel. A number of technical issues and research and data needs have emerged from these assessments. DOE has determined that a large scale cask research and development project using various configurations of dry storage cask systems and experiments would be beneficial.

A draft test plan for the High Burnup Dry Storage Cask Research and Development Project (CDP) has been drafted by DOE's contractor the Electric Power Research Institute (EPRI) to document what is planned to be accomplished by the CDP. DOE is soliciting comments from the public to obtain feedback on what the Department plans to execute.

A copy of the draft test plan can be found at the following link: *http://www.id.energy.gov/insideNEID/PublicInvolvement.htm.* Locate the area on the page that pertains to the High Burnup Dry Storage Cask Research and Development Project (CDP). Click on the link for the draft test plan.

Submitting Comments

Stakeholder's comments should be aligned, if possible, with the goals and objectives of the CDP. All comments will be considered that are received by the deadline that appears in the **DATES** section.

Instructions: Submit comments via any of the mechanisms set forth in the **ADDRESSES** section above. Identify your name, organization affiliation, comments on the draft test plan, email, and phone number. If an email or phone number is included, it will allow the DOE to contact the commenter if questions or clarifications arise. No responses will be provided to commenters in regards to the disposition of their comments. All comments will be officially recorded without change or edit, including any personal information provided.

Privacy Act: Data collected via the mechanisms listed above will not be protected from the public view in any way. DOE does not intend to publish the comments received externally; however, data collected will be seen by multiple entities while comments are resolved.

Dated: November 5, 2013.

Jay Jones,

Office of Fuel Cycle Technologies, Office of Nuclear Energy.

[FR Doc. 2013–26977 Filed 11–8–13; 8:45 am]

BILLING CODE 6450–01–P

DEPARTMENT OF ENERGY

[OE Docket No. PP–362]

Notice of Availability for the Draft Environmental Impact Statement and Announcement of Public Hearings for the Proposed Champlain Hudson Power Express Transmission Line Project; Correction

AGENCY: U.S. Department of Energy.

ACTION: Notice of availability and public hearings; correction.

SUMMARY: The Department of Energy (DOE) published a document in the **Federal Register** of November 1, 2013, announcing the availability for the Draft Environmental Impact Statement and public hearings for the proposed Champlain Hudson Power Express transmission line project. This document corrects an error in that notice.

FOR FURTHER INFORMATION CONTACT: Requests for additional information should be directed to Brian Mills at *Brian.Mills@hq.doe.gov.*

Correction

In the **Federal Register** of November 1, 2013 in FR Doc. 2013–26080, 78 FR 65622, please make the following correction:

U.S. DEPARTMENT OF ENERGY

Nuclear Energy

Status: 3. ISG-24 Draft Issued

NRC also issued draft ISG-24 which expresses NRC's desire to have gas sampling for dry storage demonstration projects:

> ***Interim Staff Guidance-24, Revision 0: <u>The Use of a Demonstration Program As Confirmation of Integrity for Continued Storage of High Burnup Fuel Beyond 20 Years</u>***
>
> ***"The following general requirements should be included for a demonstration program for storage of HBF beyond 20 years to be applicable to support a license or certificate application:***

1. The maximum burnup of the fuel...

2. The demonstration canister will be dried by a widely recognized industry method...

3. The interior of a helium-filled demonstration canister will be monitored continuously for moisture, hydrogen, oxygen, fission gas, and fuel cladding axial temperature distribution."

Division of Spent Fuel Storage and Transportation
Interim Staff Guidance-24, Revision 0

Issue: **The Use of a Demonstration Program as Confirmation of Integrity for Continued Storage of High Burnup Fuel Beyond 20 Years**

Title 10 of the *Code of Federal Regulations* (10 CFR) Part 72, "Licensing Requirements for the Independent Storage of Spent Nuclear Fuel, High-Level Radioactive Waste, and Reactor-Related Greater Than Class C Waste," requires that storage of the waste meet various criteria. One criterion requires the spent fuel cladding be protected during storage against degradation that leads to gross ruptures, or not pose operational safety problems with respect to its removal from storage. (see 10 CFR 72.122(h)(1)). Additionally, storage systems must be designed to allow ready retrieval of the waste for further processing or disposal. (see 10 CFR 72.122(l).

This Interim Staff Guidance (ISG) document provides guidance to the staff for reviewing if a demonstration of high burnup fuel (HBF) has the necessary properties to qualify as one method that an applicant might use in license and certificate of compliance (CoC) applications to demonstrate compliance with 10 CFR 72.122(h)(1) and 10 CFR 72.122(l). This guidance is not a regulatory requirement. Alternative approaches may be used to demonstrate safety and compliance, as appropriately justified by an applicant.

Status: 4. Sensor Idea Solicitation

Three meetings have been held to develop a focus on several conceptual monitoring ideas:

- **EPRI/Extended Storage Collaboration Meeting; December 6, 2013, Charlotte, NC**
  - Industry, DOE, DOE-labs, International (NNL, IAEA) NRC in attendance
  - Open meeting to solicit potential cask/canister monitoring techniques and ideas for the High Burnup Dry Storage Demonstration project
- **DOE/EPRI project meeting; January 9, 2014, Las Vegas, Nevada**
  - Further discussed conceptual ideas – DOE laboratories focus
    - Established a process to down select conceptual ideas for consideration
    - Provided additional information to proposers
- **DOE labs meeting; January 23, 2014, Las Vegas, Nevada**
  - Selected four main categories for consideration for the HBU demonstration
    - Passive, external to cask
    - Passive, internal to cask
    - Active, external to cask
    - Active, installed within the cask lid

Functional Criteria

A functional criteria basis has been developed for consideration and down select of conceptual ideas:

- Technologies must have sufficient **operational maturity** that deployment within one-to-two years is possible
- Technologies can be associated with **either continuous monitoring or intermittent sampling**
- Technologies can **focus on a single parameter** to be measured, **or on multiple parameters**
- **Hardware must be compatible** with the demonstration design constraints of the candidate storage cask
- **Technologies must be compatible** with operational constraints

Steve Marschman

CONCEPTUAL IDEAS

Demo Cask Technical Limits and Conditions

The EPRI team has identified potential HBU fuel assemblies for the demonstration. It is not expected that any fuel will be failed, nor is any expected to fail.

With that expectation, if a single fuel rod were to fail, the potential fission gas release was calculated:

- FGR was calculated for a single fuel rod failure:
  - 3% FGR for a 49 GWD/MTU fuel, ~9.5 ppb Kr-85 in cask volume
  - 7% FGR for a 67 GWD/MTU fuel, ~56 ppb Kr-85 in cask volume

Other conditions may include:

- Water vapor: >3000 ppm assuming one mole water vapor in the cask cavity
- Hydrogen: >30 ppm due to partial dissociation of water
- Oxygen: ~1-100 ppm from residual air
- Peak cask lid temperature: ~125 °C
- Peak lid dose rate: ~60 mrem/hr gamma

Design Requirements

- **Goal: Smaller instrumentation may be better to minimize structural or confinement impacts**
- **Battery/solar (no line power at ISFSI pad), with a potential safety impact no more than the equivalent impact from burning 200 gallons of diesel fuel**
- **Data logger:**
  - Simple, reliable, weather-proof
  - Preferred: Use the same type of data logger as that for the thermocouples
- **Try to design instruments to utilize existing TN conceptual design penetration**
- **Confinement should adhere to or be equivalent to TN already-qualified penetration**
- **Meet tip-over requirement of 78 G.**
- **Allow unimpeded access to any protective covers (do not make it impossible to access anything you might want to access)**
- **The "weather hat" installed over the top of the cask is 1/2" thick steel that helps the cask meet missile impact requirements. Any instrumentation that is not included inside this hat must meet the same requirements.**

Passive, External to Cask

- Characterized by few (if any) moving parts
- Little to no power requirements
- Requires a single cask lid penetration for access to the interior gas
- Must acquire the sample periodically for analysis
- Sampling frequency is semi-annually or fewer

Gas Sampling Apparatus

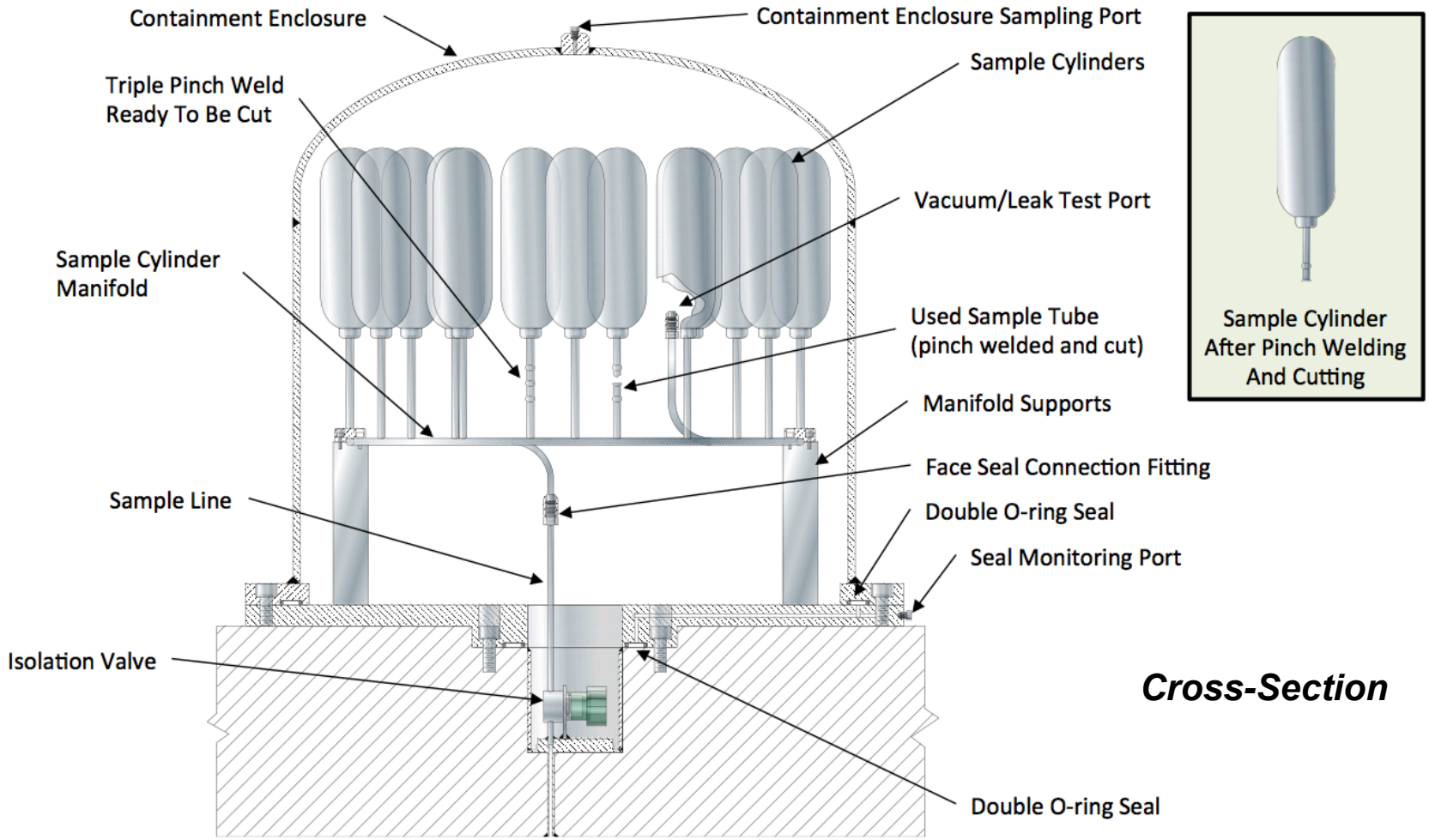

Cross-Section

Gas Sampling Apparatus

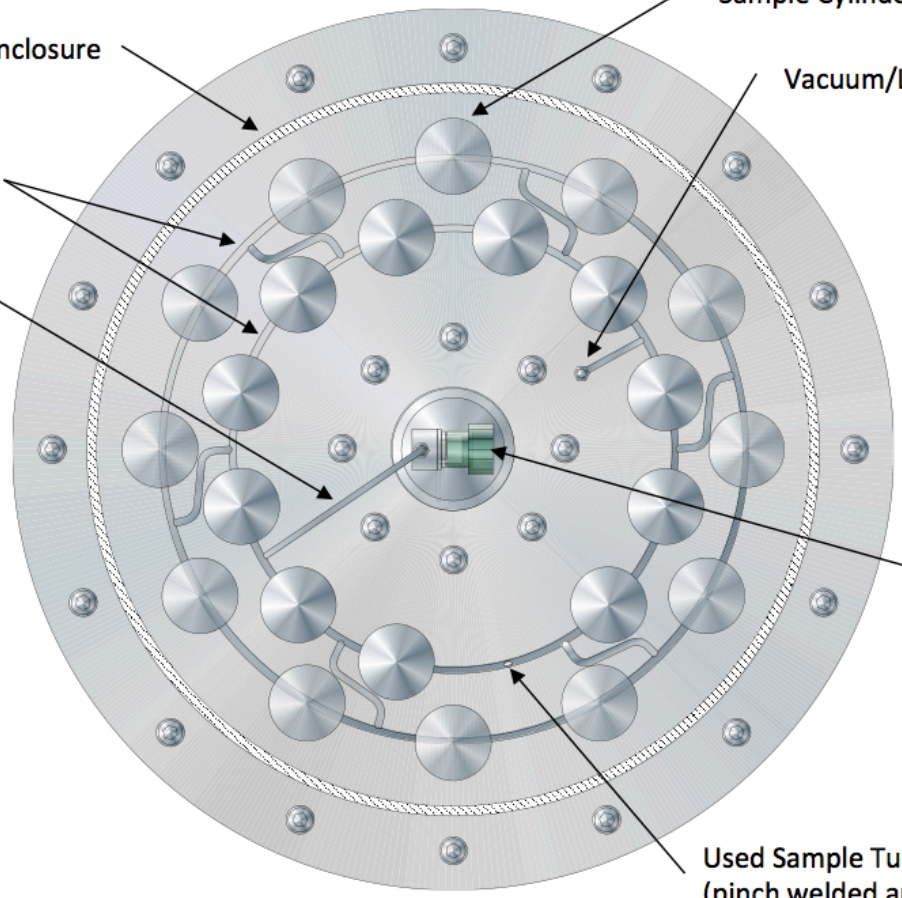

Plan View

Gas Sampling Features

- **Passive gas collection system relies on diffusion**
  - Complex vacuum pump and valve arrangements are not required
  - Sample cylinders can be sized for required gas volume
  - Mounting on cask lid (under weather cover) minimizes diffusion length and time
  - Configuration shown is illustrative, alternative configurations can be developed to avoid modification of the existing weather cover
  - Mounting outside weather cover on side of cask may improve access, reduce dose
- **Triple pinch weld closure mitigates the potential for gas release**
  - Tube pinch welding proven for decades within the DOE complex
- **System interfaces with "standard" size lid port (e.g. similar to vent and drain ports)**
  - Interface with an existing vent or drain port may be possible
- **Isolation valve is optional, but offers advantages:**
  - Allows fitting of gas sampling apparatus on the pad
  - Could enable refitting of additional sample cylinders in the future
  - Prevents water intrusion into sample manifold and cylinders during pool loading
- **Enclosure provides secondary containment and missile shield on the storage pad (if required)**
  - Double O-ring seal similar to vent and drain ports
  - Capable of being monitored for leaks
  - Sampling port allows detection of gas leaks prior to enclosure removal and leak testing after enclosure installation

Gas Sampling Apparatus

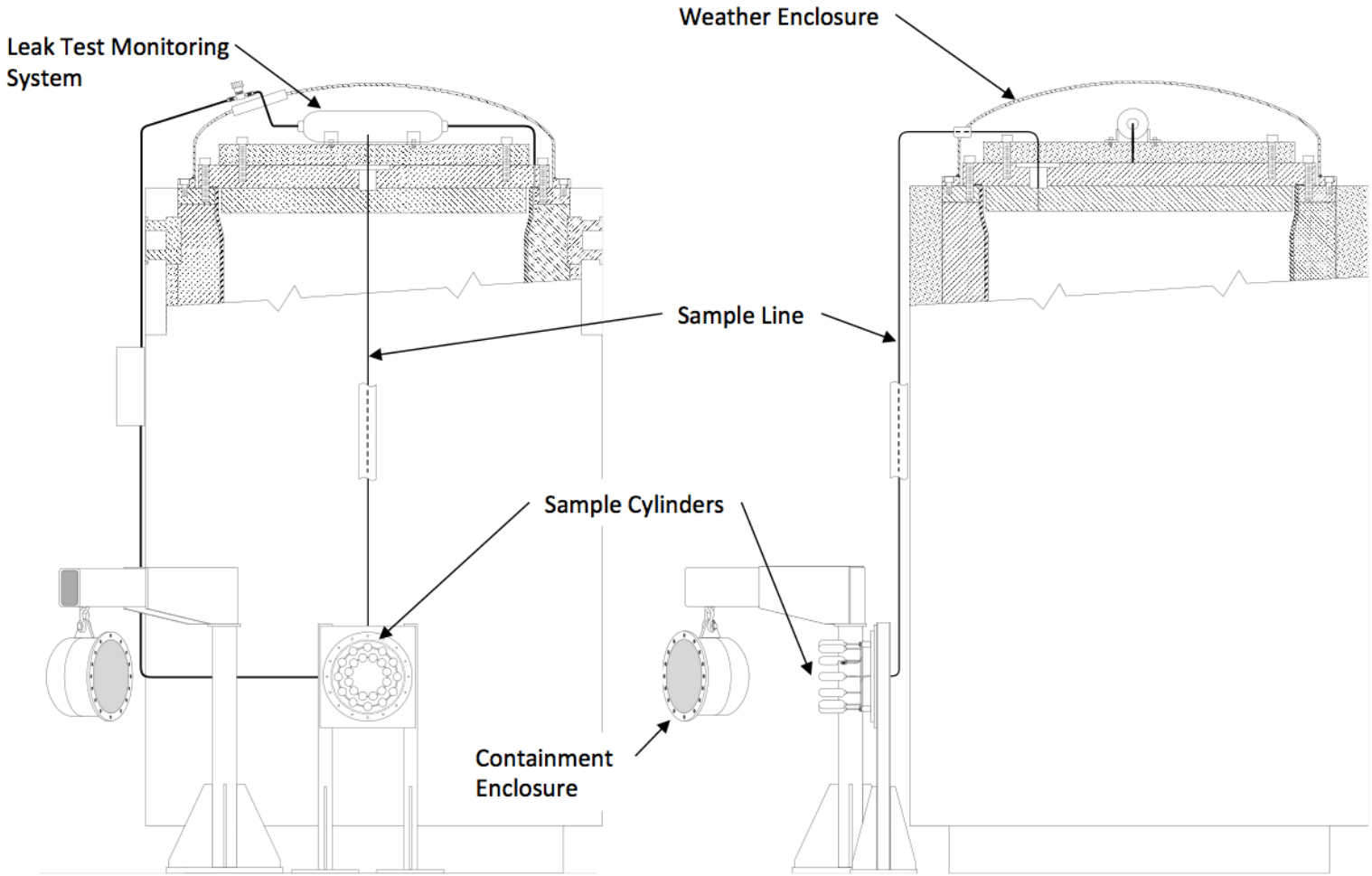

Potential Cask Side Installation

Assessment of Technical Maturity

- **Method is simple. Relies upon equilibration of gas species in the cask with sample cylinders.**
  - Minimal technology development is needed to deploy
  - Pinch welding technique is proven and reliable
  - Gas could be analyzed by mass spectroscopy (highly accurate and very low detection levels)
  - Soret effect may come into play while cask internals are hot and sample cylinders are cooler; fission product gases may segregate
- **Removing a gas sample cylinder would require an operations campaign**
  - Human interaction (planning, training, operator dose rate)
  - Machines and tools would be brought onto storage pad for lifting, welding, sealing, testing seals, electrical generation
  - Time consuming for plant operations
- **Could occupy a sizable space on top of the cask**
- **Must ensure leaks cannot happen**
  - Safety basis analysis is critical
    - Could drive need for protective, sealed cover. This is a concern during sample cylinder removal as the cover would be removed

Passive, Internal to Cask

- Characterized by few moving parts
- Requires a single cask lid penetration for electrical connections
- Sampling frequency is annually
- Samples stay inside the cask and are unavailable until the end of the demonstration
- Perhaps best suited for a back-up role (redundancy)

Gas Sampling Inside the Cask

- Gas sample cylinders are placed inside the cask in an open position. Valves would be successively closed to capture a sample at that moment in time
  - Use gas mass spectroscopy to analyze each sample.
    - Sensitive enough to tell if one or more rods have failed
- Size of system limits number of samples
- Recovery of samples follows test
  - Always a risk a valve could leak, perhaps not best idea for the only test method
- Requires one penetration in cask lid to make electrical connection to the valve system
- Needs a sealed solenoid for the valve and a valve with a high temperature seal

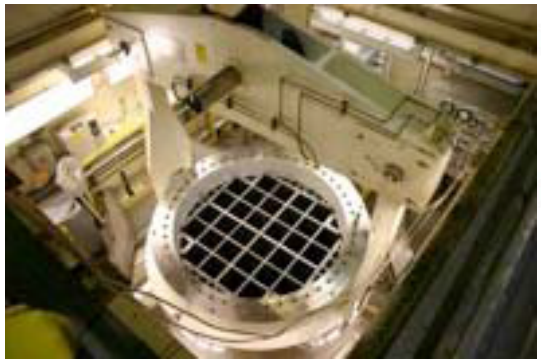

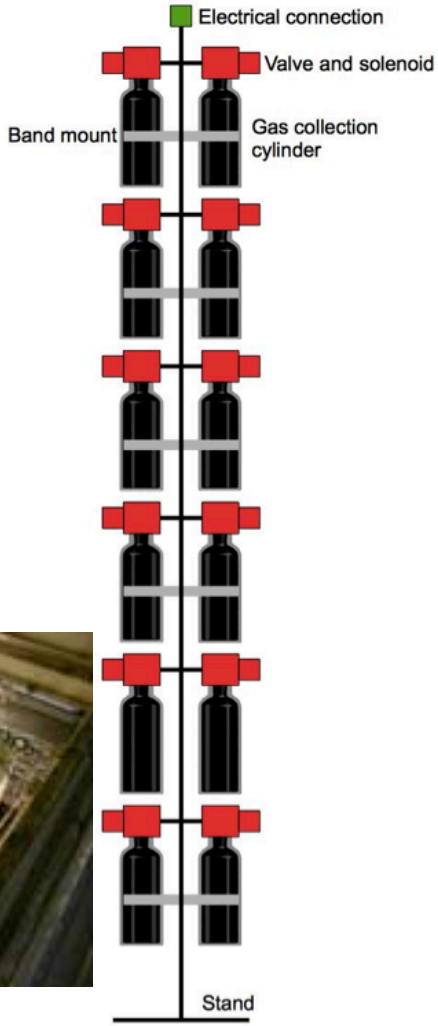

Assessment of Technical Maturity

- **Method is simple in concept.**
  - Gas could be analyzed by mass spectroscopy (highly accurate and very low detection levels)
- **Space is limited (four triangular shaped spaces are available in a TN-32 basket)**
- **Biggest concern is the need for a high temperature valve that can seal gases for up to the duration of the demonstration.**
  - Need an electrically activated “snap-shut” valve to allow use of a soft metal seal (have not found one, yet, may require development)
- **Second concern is that samples would not be available until after the demonstration cask is opened.**
  - NRC comments regarding usefulness of test for license applicants is not addressed
  - Likely should be considered as a redundant method for gas collection and analysis.

Active, External to Cask

- Characterized by no confinement boundary penetrations
- Sampling frequency is up to continuous
- Non-destructive techniques

Externally Mounted Sensors

- **Externally mounted ultrasonic sensors may be used to monitor several variables of interest w/ out cask penetration**
- **Possibilities include monitoring of standing water or water condensation on internal surfaces, pressure, temperature, and impurities**
- **Dry coupling materials are typically elastomeric in nature – would need to choose materials compatible with environment at cask surface**

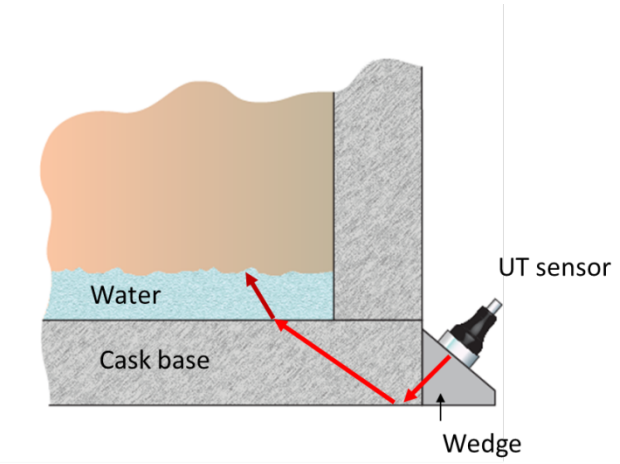

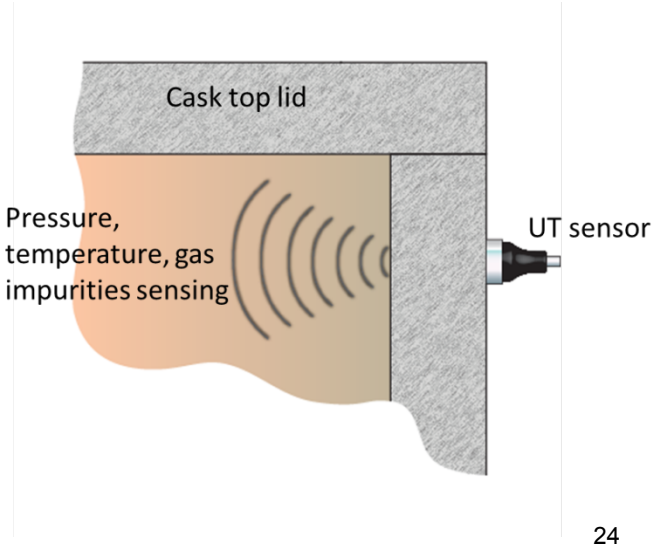

Assessment of Technical Maturity

- **UT method for free water is the most mature**
  - Could be deployed in multiple locations around the cask exterior using wedge-shaped magnets to attach the sensors to the cask (below the neutron shield)
  - Offers the greatest chance for identified residual free water in the cask (except that might be entrained in the fuel assemblies), particularly if the cask is not completely level
- **Internal pressure of the cask could be measured by speed-of-sound**
- **Analysis of water vapor, minor gas species is least mature**
  - Feasibility for fission gases has not been performed
  - Some information on water vapor determination is available, but also not mature
  - Likely a multi-year effort to determine viability and deploy

Active, Internal to Cask Lid

- Characterized by instrumentation being placed within the cask lid
- Devices can be sealed inside or only electrical wire penetrations
- Sampling frequency can be continuous

Develop a Standard Instrument Well

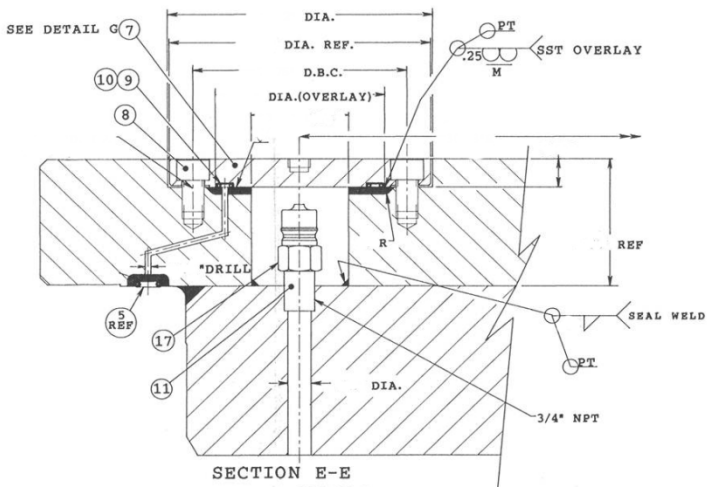

TN-32 blow-down fitting

- Propose to develop a "well" for instruments that is based upon the blow-down fitting design
- Standardize the size of the well to allow cask engineering design to proceed. The exact instrument is not needed (potentially) until licensing

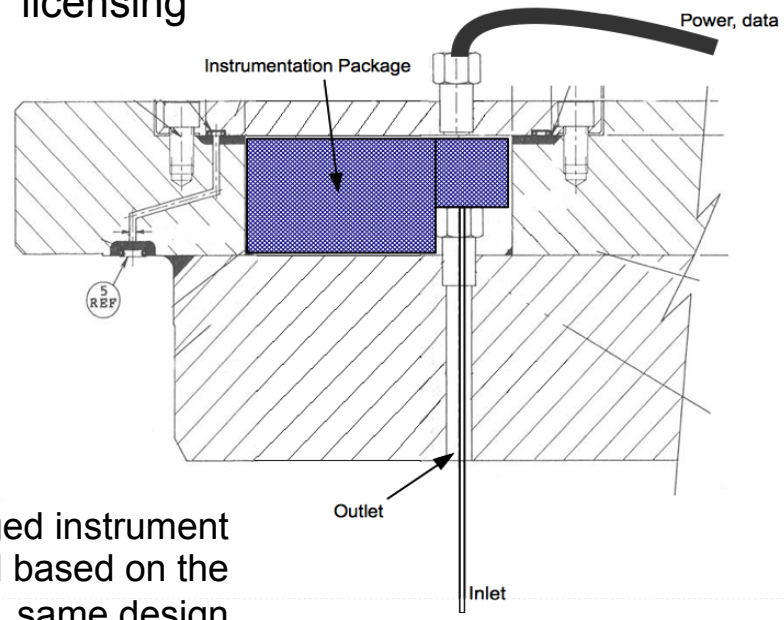

Enlarged instrument well based on the same design

Goal is to allow for instrument flexibility while allowing design work to go forward.

Multiple Species Sampling

A prototype remote wireless instrumentation package for used fuel canisters was built and demonstrated. It used:

- Gas sensors: analog metal oxide conductance/capacitance H_2, H_2O
- Radiation sensor: miniature Geiger Mueller tube
- Temperature sensor: digital -25 to 125 °C
- Radio Transmitter: 450 MHz nominal 600 ft range.

This system can be modified to work within a cask lid.

- Utilize a metal piston or vane pump to recirculate gas through the system
- Replace GM tube with a chamber for counting fission gas via gamma spectroscopy
  - Utilize a getter for Kr-85
- Hard wire device if Wi-Fi becomes problematic

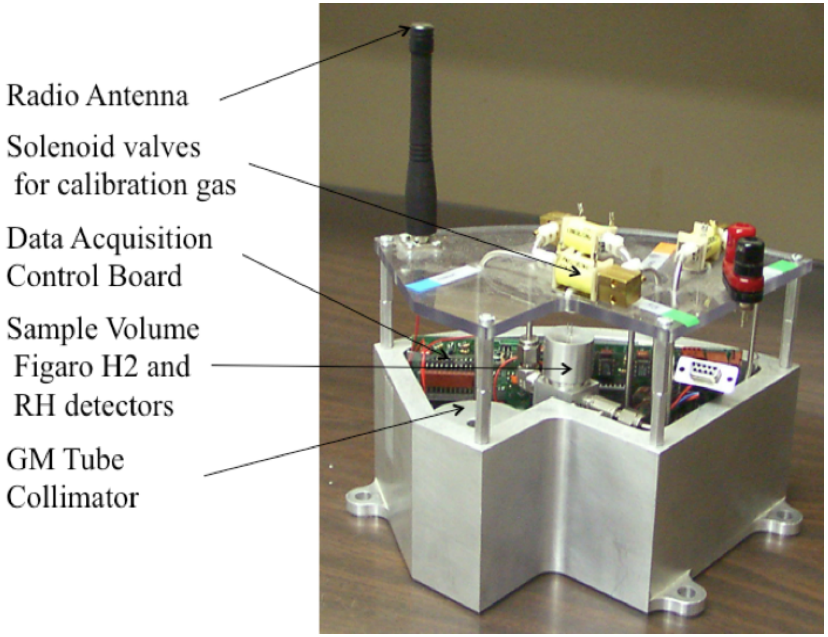

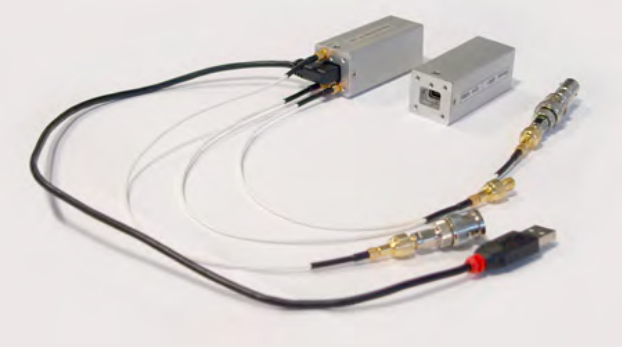

Miniature gamma spectrometer

Millimeter Wave Detector

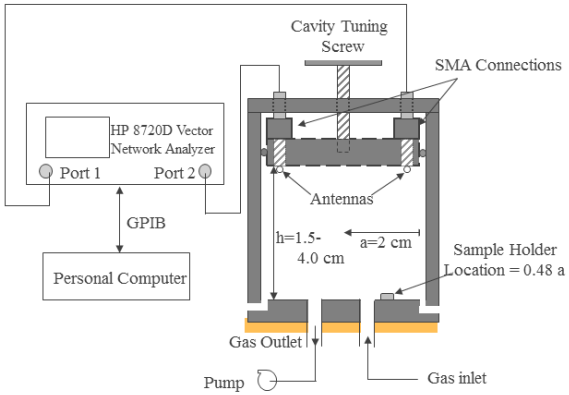

Schematic diagram of the measurement system consisting of a cylindrical microwave cavity tunable between 8 GHz and 12 GHz

- A novel Argonne-patented sensor (resonance-enhanced dielectric cavity), has been proposed for fission gas measurements.
  - The cylindrical cavity, designed to operate at microwave or millimeter wave frequencies, *can be embedded in the lid well*
  - The principle of operation is the measurement of dielectric property of the gases (permittivity and absorption coefficient), which varies with the molecular property of the gases and operating frequency.
- A prototype cavity was built and tested for detection of organic gases for a DOE sponsored project.
- Selectivity to individual fission gasses may be only moderate, the method offers a fast, in-situ measurement of changes in the gas composition with high sensitivity.

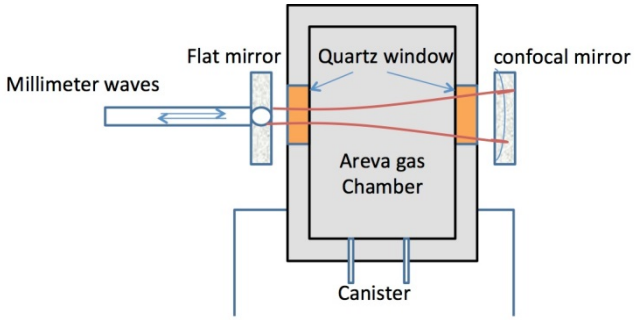

- Another version of the cavity, based on the same measurement principle (but may be built around the [an AREVA design] gas chamber) is Fabry-Perot type open cavity. This version is less intrusive but requires a pair of lossless transmission windows.

- This technique should be capable of measuring gases in the low ppm to high ppb range.

Passive Monitoring of Optical Emissions From Impurity Species in Backfill Gas

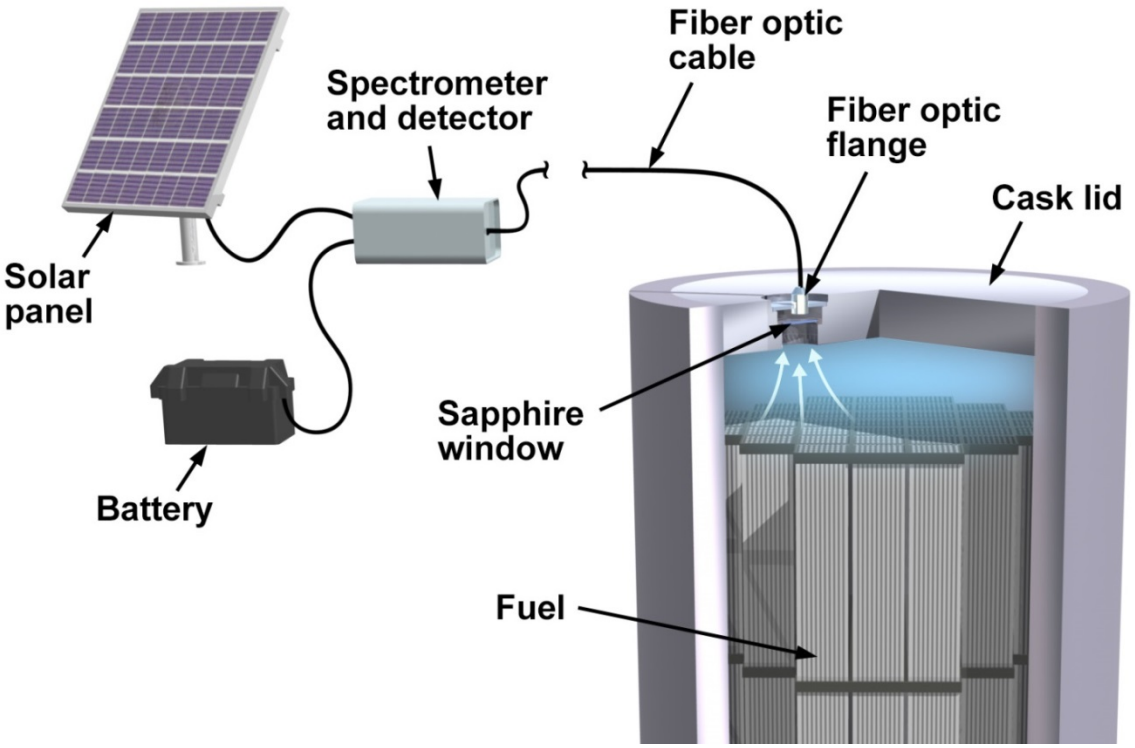

- Method is based on the measurement of optical emission induced by gamma rays coming from the bundled fuel elements
- Principles have been demonstrated in the field of nuclear pumped lasers
- Body of work is available in which low level optical emission has been used to identify specific lines from atoms or molecules present in gas mixtures

Brazed Sapphire Window in Cask Lid

Environmental Compatibility	Requirements	Expected Performance (Sapphire Window)	Expected Performance (Silica Optical Fiber)
Temperature	125 C	Up to 450 C*	Up to ~ 300 C*
Gamma Radiation Tolerance	---	Up to 10^{10} Rad*	Minimal degradation up to approx. 10^{8} Rad*
Pressure	1 – 5 atm (0.1 – 0.5 MPa)	Tens of MPa*	
Confinement (leak rate)	---	10^{-9} – 10^{-10} cc/sec*	10^{-8} – 10^{-10} cc/sec (flange)*

This method can also be adapted for use within a well and protected using a plate cover

- **Safety basis concern due to window fracture can be mitigated through double seal design with redundant fiber optic flange**
- **Fully automated, continuous monitoring is feasible – no need for periodic access by workers**
- **Calculations show this method can detect ppb concentrations of Kr-85**

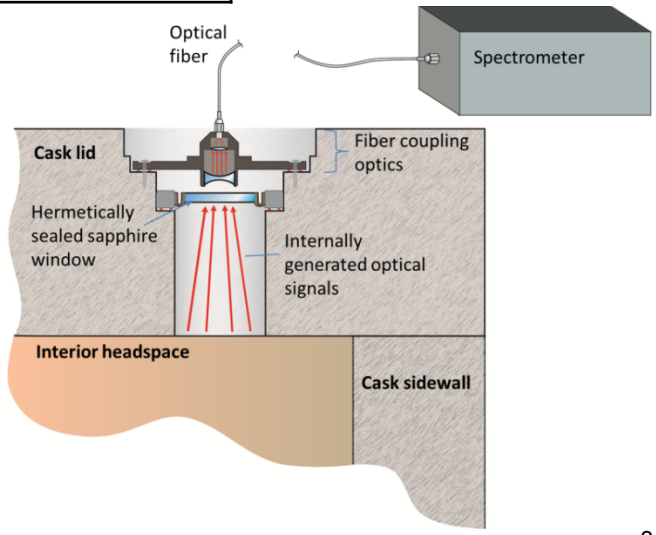

Assessment of Technical Maturity

- **Methods can be complex; development time for these concepts is the longest of any method proposed**
  - All concepts require low voltage electrical power (solar/battery mix)
  - Some designs require a pump to recirculate gas (risk of failure and unlikely that any repair is possible)
  - Gamma spectroscopy may require additional shielding to reduce impact of background radiation on measurements
  - Electronics can be radiation hardened, but do receive continuous radiation exposure (risk of failure)
  - All methods require development to fit within the lid space
  - Some techniques require proof-of-principle testing (e.g. milli-meter wave) that is time consuming
  - The stability of methods over time needs to be assessed
- **Offsetting the concerns are:**
  - The potential for continuous, or near continuous monitoring of cask internal volume
  - The ability to deploy a system that can do multiple measurements simultaneously (e.g. water vapor/humidity, pressure, oxygen, hydrogen, fission gases)

Other Measurements, Inside Cask

- This area captures methods for measuring other species from inside the cask
  - Free Water
  - Humidity
  - Pressure
  - Temperature

Methods for Liquid Water Detection

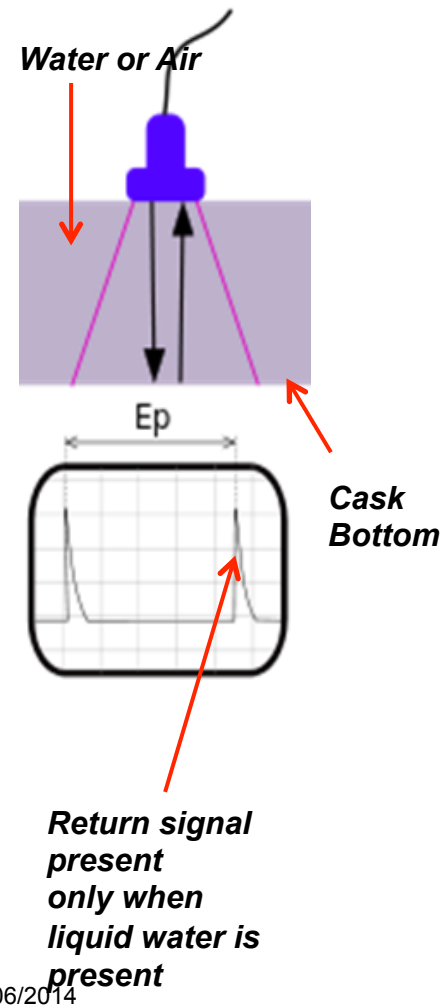

- Presence of liquid water unlikely under the initial conditions (temperature/pressure of cask).
- "SWAG" indicates ballpark water level may be 1" or less.
- Install Ultrasonic Transducer within 1 inch of the bottom of the cask.
- Transducer will indicate the presence of water or not.
- No return signal if there is not liquid water present.
- High Temperature sensors available up to 1000 F.

ΣSIGMA TRANSDUCERS

Pressure/Temperature Gauge

- Commercial Off-the-Shelf
- 700 F Maximum temperature
- Contacted Vendor for Pressure Ranges, Accuracy, and other specification.
- Custom sensors also available from various vendors.

Sensonetics New High Temperature transducer offers a transducer that can operate up to 700° F for pressure and temperature measurement. Our Pressure & Temperature Transducer is compensated to a maximum pressure of 10,000 psi and a maximum temperature of 700° F. We can offer this configuration in mV Output, 4-20 mA, 0-10 and 0-5 VDC output. This latest SOS technology developed by Sensonetics will open the door to various field explorations in the downhole industry as well as other various manufacturing, engineering opportunities that require this sensor temperature capability.

Humidity Sensor

- Measurement theory based on capacitance change due to absorption/desorption of water vapor
- Commercial Off-the-Shelf up to 200 °C
- Custom sensors are available that can function at temperatures to 400 °C and higher

Technical Specifications

	H6000	H6100
Response time 90% of scale for a step change from 11 to 75% RH	20 sec	20 sec
Operating range Humidity Temperature Pressure	0–100% RH -30 to +200°C (-22 to +392°F) 0.04–30 bar (0.6-400 psi)	0–100% RH -30 to +100°C (-22 to +212°F) 0.04–30 bar (0.6-400 psi)
Mixing ratio	250g (8.82oz) water/Kg dry air	
Nominal capacity 75% RH @ 23°C (73°F)	500 pF ± 10%	
Sensitivity 11–75% RH @ 23°C (73°F)	0.86 pF / % RH	
Linearity 11–90% RH) @ 23°C (73°F)	± 2.5% RH	
Long term stability (12 months) control @ 11% RH	< 1% at 23°C (73°F)	
Max. air speed (without protection)	< 20m/sec	
Hysteresis	Typical value = 0.5% RH	
D Factor loss tangent @10 KHz 75% RH @ 23°C (73°F)	Typical value = 0.007	
Supply voltage Peak-to-peak	2.5 V AC DC component < 0.2 V	
Operating frequency range	5/300 KHz	
Protection cap **Weight**	No 0.1g (0.0004oz)	Yes 1g (0.035oz)

Modified Thermal Lance Conceptual Design

- **Modify AREVA Thermocouple Lance design without violating the existing pressure boundary**
- **Install multiple sensors in each Thermocouple Lance.**
- **Number of sensors is linked to:**
  - The number of conductor pairs in pass-thru
  - Size sensors
  - Size of conductors used on modified portion of Thermal Lance

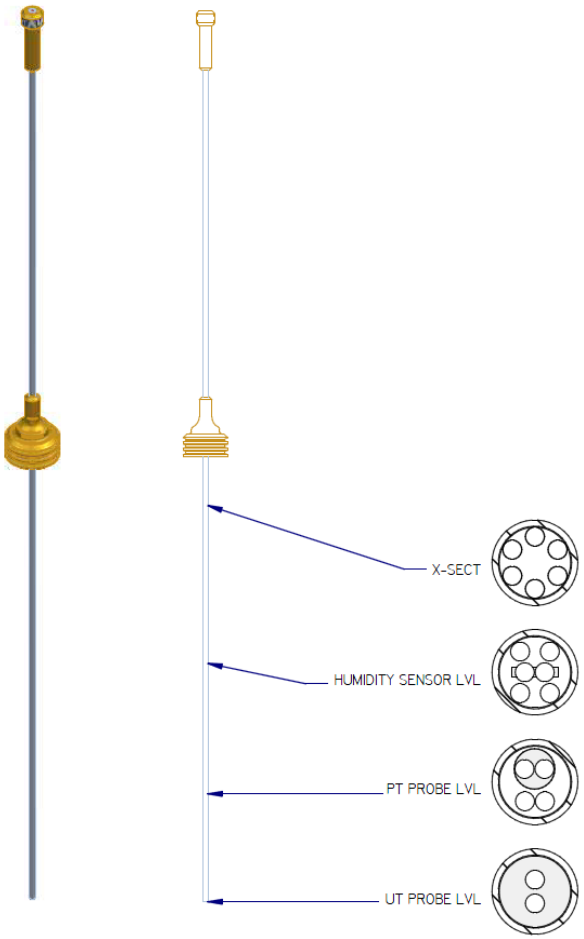

Assessment of Technical Maturity

- **Free water by conductance is simple, but if the cask is slightly off level and there is little water, the device may not detect the water.**
- **Humidity probes might drift with no calibration possible**
- **Pressure/temperature probes might drift with no calibration possible**
- **Any of these methods could be deployed with little development.**
  - Offers alternatives for some measurements
  - Could be used to provide redundancy of measurements

Instrument Data Logging and Interface

- **In addition to the instrument package, custom electronics will be needed to provide the following functions:**
  - Supply power to the instrument(s) (20 volts or less)
  - Convert instrument signals for compatibility with data recording methods or transmission
  - Data can be transmitted by secure wireless or recorded on memory at the cask
- **Designed to operate on battery power or solar cells**
- **System to be enclosed in a weather-tight enclosure**

Summary

- **There are several potential methodologies for monitoring the conditions within a used fuel storage cask.**
- **Each method has strengths and deficiencies.**
  - Technical readiness: some instruments/methods are near ready for deployment, others need some development
  - Level of human interaction: some methods need more human involvement than others
  - Technological risk: passive instruments are reliable, active instruments can fail
  - Sampling frequency: passive systems may not provide as many data points as active systems, but that may be perfectly acceptable
- Working with the EPRI Team, we hope to use the input gathered today to determine if a path forward exists for implementing one or more methodology presented.