Enclosure 2
Westinghouse APP-GW-GLR-607, Revision 1
(NON-PROPRIETARY VERSION)
(61 pages including cover page)

Changes to Passive Core Cooling System Condensate Return

Table of Contents

1.0 Introduction

According to the **AP1000®** Design Control Document revision 19 (Reference 3), subsection 6.3.1.1.1, "Emergency Core Decay Heat Removal," among the safety-related design bases of the Passive Core Cooling System (PXS) is the capability for the Passive Residual Heat Removal Heat Exchanger (PRHR HX) to cool the Reactor Coolant System (RCS) to the safe shutdown condition of 420°F in 36 hours. The Nuclear Regulatory Commission Staff recommended, in SECY-94-084 (Reference 1), that reactor designs utilizing passive safety systems include a residual heat removal system capable of bringing the reactor to a safe shutdown condition of 420°F (215.6°C) or lower within 36 hours following non-loss of coolant accident (LOCA) events. To support the capability of the **AP1000** design to meet these safe shutdown conditions, a safe shutdown temperature evaluation was performed, which assumed a condensate return fraction for the PXS.

Through a series of design reviews, the efficiency of the condensate return to the In-Containment Refueling Water Storage Tank was questioned. These questions initiated an investigation to quantify the returned fraction of condensate to the In-containment Refueling Water Storage Tank.

Supplementary testing of the **AP1000** design revealed opportunities to improve the design with regard to the condensate return fraction used to evaluate long-term plant cooldown. In addition, a rigorous analysis methodology was applied to characterize both the thermodynamic and the geometric phenomena involved in prolonged non-LOCA events. The Shutdown Temperature Evaluation in Chapter 19E of the **AP1000** Design Control Document (DCD) has been updated to analyze the PRHR HX performance with the design modifications to confirm it meets its safety-related design criteria of cooling the RCS to 420°F within 36 hours and maintaining a safe, stable condition. These changes were evaluated against the NRC Interim Staff Guidance DC/COL-011; and were determined to meet the criteria for a change that should not be deferred while a license application is under review.

This report discusses expected PRHR HX operation, condensate loss mechanisms, condensate return test results and the design modifications made to enhance performance of the PXS. Most importantly, changes to the licensing basis supporting these modifications to the PXS are detailed and compliance to NRC regulations evaluated.

2.0 Background

Regulatory basis

NRC regulations require that the **AP1000** design include a system to remove residual heat from the reactor core so that specified acceptable fuel design limits and the design conditions of the reactor coolant pressure boundary are not exceeded (Reference 2). The Passive Core Cooling System (PXS) provides emergency core cooling during transients, accidents, and whenever the normal, nonsafety-related heat removal paths are unavailable. The PXS is capable of bringing the plant to and maintaining the plant in a safe, stable condition following shutdown.

Operation

The PRHR HX is safety-related and provides emergency core decay heat removal. It is located in the In-containment Refueling Water Storage Tank (IRWST) as shown on Tier 2 DCD Figure 6.3-2. The heat exchanger is used in non-loss of coolant accident (LOCA) transients and also in LOCA events until voiding begins in the RCS Hot Leg. For any non-LOCA event, the PRHR HX plays an integral role in decay heat removal, as opening one of the two outlet isolation valves initiates natural circulation of the heat exchanger, transferring heat from the RCS into the IRWST. This transfer of heat from the Reactor Coolant System to the IRWST causes the water in the tank to heat up, eventually become saturated, and initiate steaming of the tank.

The steam generated will discharge through a series of vents located near the steam generator compartments at the roof of the IRWST. The steam generator wall vents open with a slight pressure differential between the IRWST and containment, providing a path to vent steam produced by the PRHR HX into the containment atmosphere. The steam generator wall vents open at a lower differential pressure than the IRWST hood vents located near the containment wall, which ensures the steam generator wall vents will open first. The location of the steam generator wall vents (near the center of containment) contributes to mixing of the containment atmosphere. The steam released from the IRWST condenses on "passive heat sinks" within the containment, such as the containment vessel wall, Polar Crane Girder (PCG), concrete, piping, components, or any other subcooled surface until these passive heat sinks reach saturation temperature. Condensation on the inside of the containment vessel wall forms a thin fluid film and runs down the containment wall surface. Provisions are made to collect and channel condensate to the IRWST.

The PCG and internal hoop stiffener (internal stiffener) are horizontal, circumferential attachments to the containment sidewalls that interrupt condensate flow. The PCG and internal stiffener increase the radial and rotational stiffness of the containment vessel, and are designed to allow condensate to drain back to the IRWST gutter. The PCG also supports the polar crane.

The PCG is a box girder consisting of 80 enclosed boxes; and is shown in Tier 2 DCD Figure 3.8.2-1 (Sheet 3 of 3). The front face of each box (facing into containment) has a 2 foot diameter opening. The rear face of each box is the containment wall. The PCG is constructed with chamfers and fabrication holes to allow condensate to drain past the PCG to the internal stiffener. The internal stiffener is an angle stiffener and also contains fabrication holes to allow condensate to drain past it to the IRWST gutter.

Condensate is collected in the IRWST gutter, which extends around the circumference of containment and returns condensate to the IRWST.

Upon actuation of the PRHR HX, two air-operated valves in series are actuated to isolate the

normal gutter drain path to the Liquid Radwaste System, and divert condensate to the IRWST. It is important that sufficient condensate return is achieved during non-LOCA PRHR HX operation. The ability to maintain closed-loop PRHR HX cooling for long periods minimizes the probability that open-loop cooling will be needed. Although maintaining IRWST level above the top of the HX tubes is not a prerequisite for maintaining adequate decay heat removal, reduction of IRWST level to below the top of the tubes will begin to degrade the heat exchanger performance.

Safety Analyses

The **AP1000** Design Control Document (DCD) Revision 19 Chapter 19E Shutdown Temperature Evaluation safety analysis assumes a constant portion of steam discharged to the containment is returned back to the IRWST. However, there was not a strong basis justifying the efficiency of the PXS condensate return function. Therefore, the decision was made to conduct testing and to characterize condensate return with calculations that included quantification of steaming from the IRWST and the portion of that steam that condenses and returns to the IRWST.

Testing results showed the current design of the Polar Crane Girder, internal stiffener, and IRWST gutter contributed to losses at each location, which were larger than assumed. In addition to the losses due to the physical geometry of containment, there were also losses due to pressurization and heat-up of containment structures. These losses proved that the constant condensate return fraction assumed in the safety analyses was incorrect. Analytically, when the constant condensate return assumption was replaced with the experimental design return rates including losses, the resultant PRHR HX performance was degraded and could have affected the temperature profiles and the event times of the non-LOCA design basis accident (DBA) safety analyses described in Chapter 15 of the DCD if left uncorrected. The PCG and internal stiffener can be modified to improve condensate return such that the Chapter 15 design basis analyses would not be impacted.

3.0 Discussion

Condensation

As steaming to the containment begins following PRHR HX operation and saturation of the IRWST, there are a number of mechanisms, both thermodynamic and geometric, that can prevent the condensed steam from returning to the IRWST. The mechanisms are as follows:

1) Steam to pressurize the containment
2) Steam condensation on passive heat sinks
3) Raining from the containment roof, Containment ring misalignment
4) Losses at the Polar Crane Girder and Stiffener
5) Losses at support plates attached to the containment vessel
6) Losses at the Equipment Hatch and Personnel Airlock
7) Losses at entry to IRWST Gutter

Condensation losses were evaluated by calculations and prototype testing. The losses due to pressurization, raining and condensation on passive heat sinks were quantified with the development of two new calculations and the revision of two existing calculations.

A full scale section of the containment wall was constructed at the Westinghouse Waltz Mill facility |]a,c.
The testing at Waltz Mill is discussed in Section 4.0.

The locations of the Polar Crane Girder, internal stiffener, and IRWST gutter are illustrated in Figure 1.

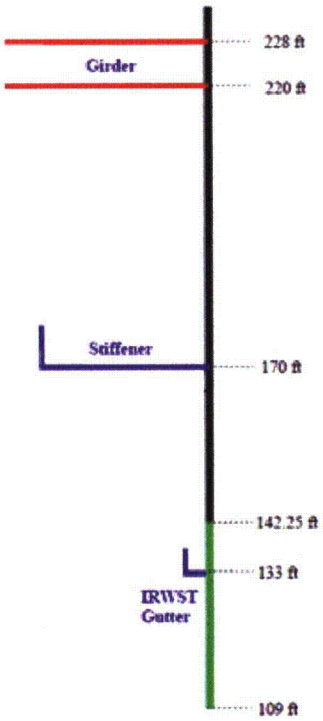

Figure 1: Example Containment Wall Schematic

4.0 Testing

A full scale section of the containment vessel (CV) wall, 55 feet tall, was constructed at the Westinghouse Waltz Mill Facility to accurately test and quantify the various loss mechanisms along the length of the containment wall. [

]a,b,c

a,b,c

[

]a,b,c

[

]a,b,c

[

]a,b,c

[

]a,b,c

Test Observations and Insights

Testing of the aforementioned configurations determined that a number of design optimizations were available to improve the performance of the condensate return system. Modifications were made at the half circle fabrication hole locations at the PCG and stiffener. A downspout piping system was deemed to be the most effective option for optimizing condensate return. The specific modifications needed at the PCG and stiffener are highlighted in Section 5.0.

[

]a,b,c

[

]a,b,c

The details related to the condensate return testing conducted at Waltz Mill are available for inspection by the NRC.

5.0 Design Changes

As a result of the condensate return testing conducted at the Waltz Mill Test Facility, modifications to the Polar Crane Girder, internal stiffener, and IRWST gutter design were made. In addition, extensions of the gutter were added above the Upper Personnel Airlock and Upper Equipment Hatch. A downspout system was also added to capture condensation at the PCG and stiffener locations. Each of these items is discussed in detail on the following pages.

Polar Crane Girder and Internal Stiffener Modifications

1) PXS Downspout Piping

A downspout piping network would be added to collect and transport condensation from the PCG and stiffener to the IRWST gutter collection boxes. The downspouts would consist of two downspout branches, each with two connections to the top of the PCG, two connections to the bottom of the PCG and two connections to the internal stiffener. Figure 3 illustrates the two downspout branches incorporated into the PXS system design. In each branch, the four connections from the polar crane girder would join together into a common header which extends below the internal stiffener. The two connections from the stiffener would join together into a common line, which would connect to the header below the stiffener. The header would be routed to one of the two PXS collection boxes at either side of the IRWST. The downspouts would be situated with approximate symmetry around the circumference of containment. The common header for each branch would pass through the internal stiffener. These pass-through locations would include penetration sleeves to allow sufficient depth for collection at the stiffener downspout inlets.

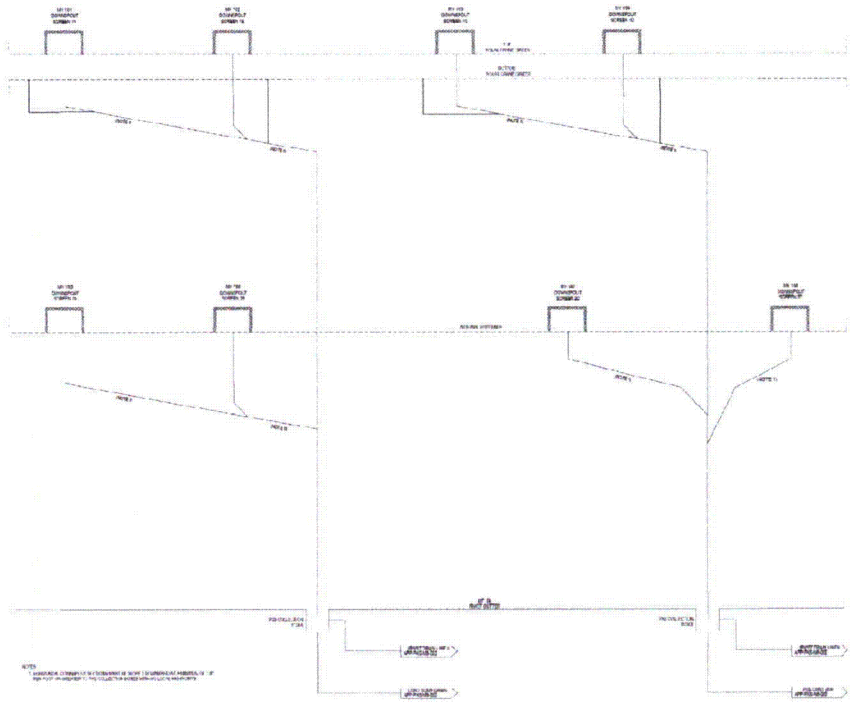

Figure 3: Simplified Downspout Configuration

The PCG boxes would be modified to allow condensate to drain from inside the PCG. The configuration of the collection boxes is modified to accommodate the additional downspouts. The piping is constructed of materials approved for use inside containment, consistent with DCD Tier 2, Section 6.1.1.4 (Reference 3). The downspouts will have tag numbers PXS-L301A/B to PXS-L310A/B. The downspouts are **AP1000** Safety Class C, Seismic Category I.

Pipe sizes were selected to prevent pipes from running full of water. The pipe sizes were also selected to accommodate a single failure (blockage) of one of the screens over the inlet to the downspouts. [

]a,c All sections of piping routed horizontally are sloped 1/8 inch per foot or greater downward toward each of the respective collection boxes. The PXS piping and instrumentation diagrams were changed accordingly.

2) Downspout Screen Design

The original IRWST gutter design includes an expanded metal flat screen which is fastened over the entrance to the gutter. The primary focus of the metal screen was to prevent larger debris from entering the gutter and potentially interfering with flow into the gutter or piping from the PXS collection boxes. Similarly, at the entrance of each of the downspouts from the top of the PCG and from the stiffener, a screen is needed for the same function – to prevent any larger debris from blocking the downspout piping. The screens are designed to allow small debris to pass through.

Eight (8) new PXS downspout screens were added. The screens will have the tag numbers PXS-MY-Y81 to PXS-MY-Y88. The screen at each downspout entrance is **AP1000** Safety Class C, Seismic Category I. [

]a,c

Figure 4 provides an illustration of a downspout screen.

[ ]a,c

The screens would be constructed of materials compatible with the post-accident environment, consistent with DCD Tier 2, subsection 6.1.1.4. Aluminum would not be used for these components. The screen would be designed to allow small debris to pass through; and provide sufficient flow area to accommodate design basis flow rates at the PCG and internal stiffener

locations. [

]a,c

3) Blocking of PCG/Stiffener Fabrication Holes

The Polar Crane Girder is made up of sections, which are welded together around the circumference of containment. At each interface where the top and bottom plate sections are welded together, all four corners have openings to prevent multiple welds from joining at a common location. Therefore, the assembled PCG has open fabrication holes at the corners where the sections interface. The stiffener is similarly assembled in sections and contains fabrication holes at the interface where each section is welded together. DCD Tier 2 Figure 3.8.2-1 (Sheet 3 of 3) shows an example of the fabrication holes. The fabrication holes in the PCG and in the stiffener would be blocked.

4) Addition of Dam on the PCG

[

]a,c a dam is welded to the top of the PCG between the CV wall and the crane rail and to the bottom front edge of the PCG. [

]a,c The proposed top side dam is depicted in Figure 5.

[ ]a,c

Figure 5: Polar Crane Girder Dam

]a,c

[ ]a,c

Personnel Airlock and Equipment Hatch Gutter Routing

The original IRWST gutter was routed to the edges of the Upper Personnel Airlock and Upper Equipment hatch. [ ]a,c The IRWST gutter will be modified to have an upper gutter above each of the hatches that connects with the existing gutter. The extended gutter is of the same size as the sections which currently interface with the sides of the hatches. The gutter is sloped the same as the existing portions of the gutter. The extended portion of the gutter above the Upper Personnel Airlock is routed to interface with the lower portion of the gutter. Figure 8 shows a schematic of the proposed modification to the IRWST gutter to above the Upper Personnel Airlock. The Upper Equipment Hatch is similarly treated.

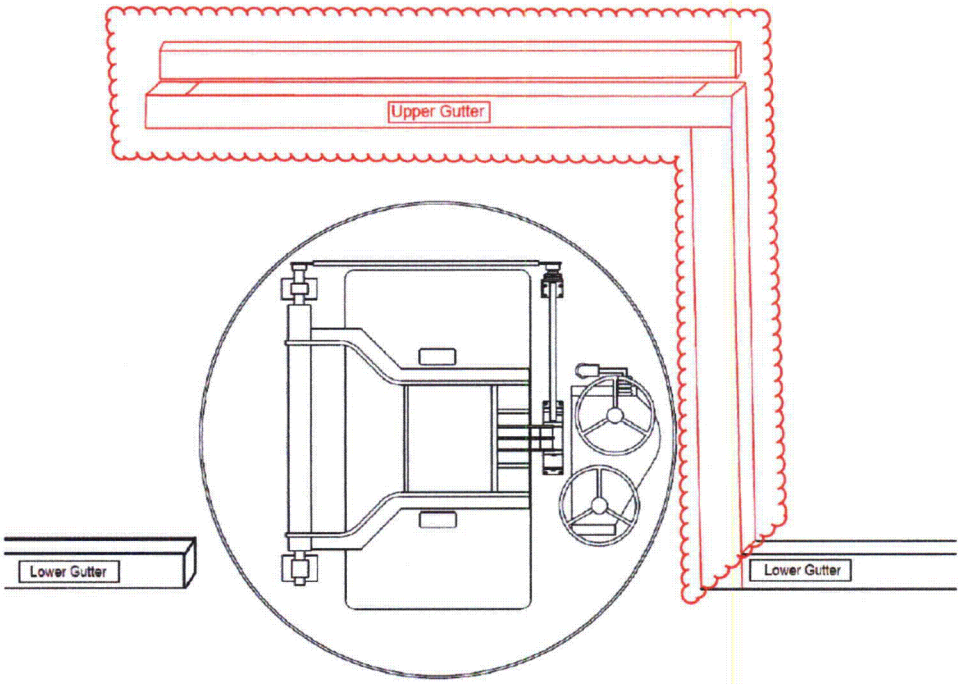

Figure 8: Personnel Airlock Gutter Modification Schematic

The Shutdown Temperature Evaluation summarized in DCD subsection 19E.4.10.2 was updated (reference 7). The analysis is performed using the LOFTRAN computer code, as before, with a more detailed input for the condensate return fraction. Condensate return is affected by the containment pressure, which determines the PRHR HX heat sink (IRWST water) temperature. The WGOTHIC containment model described in DCD subsection 6.2.1.1.3 was used to model the peak containment pressure, with limited changes made to the model to maximize condensate losses (as opposed to maximizing peak pressure). The WGOTHIC model was used to calculate thermodynamic condensate losses due to containment pressurization, containment leakage and passive heat sink saturation (reference 8). The WGOTHIC results were combined with detailed calculations of geometric condensate losses that incorporated the changes described in section 5.0 (reference 9) to develop a variable condensate return fraction.

The geometric and thermodynamic condensate losses were incorporated into a calculation to demonstrate PRHR HX performance. The results of this calculation showed that, with the intermediate collection points established by the addition of downspouts, blocking of the PCG and internal stiffener fabrication holes, the PCG dam addition, and the personnel airlock/equipment hatch gutter routing, enough condensate is returned to the IRWST to maintain the IRWST water level above the top of the PRHR HX tubes until long after the success criteria of the design basis non-LOCA events described in DCD Chapter 15 are met. This analysis also demonstrates that closed-loop PRHR HX operation can maintain long-term core decay heat removal (reference 6).

The time-dependent condensate return fraction and the resultant IRWST level and PRHR HX response were input into the LOFTRAN code to demonstrate the ability of the PRHR HX to cool

the RCS temperature to 420°F within 36 hours in a closed-loop mode of operation. This analysis demonstrated that the proposed changes to channel condensate that reaches the PCG and internal stiffener back to the IRWST maintains sufficient IRWST inventory. Although the PRHR HX tubes do begin to uncover before the plant reaches 420°F (which occurs long after the endpoint of the Chapter 15 events), the analysis shows the plant can successfully meet this safety-related design criterion (reference 7). A description of the differences and conservatisms applied in these analyses is presented in Appendix A.

Additionally, a discrepancy exists in Table 19E.4.10-1, which reports the time at which the hot leg temperature in the RCS loop with the PRHR HX in it reaches safe shutdown temperature. The time shown is actually the time at which the RCS average temperature reaches safe shutdown temperature, as described in the text of subsection 19E.4.10.2. The core average temperature (RCS temperature) should be reported in this table.

6.0 Impacts to the Licensing Basis

Condensate return to the IRWST is discussed widely throughout DCD revision 19 in conjunction with PRHR HX operation. Though the changes described in Section 5.0 do not change the condensate return concept or the safe shutdown temperature analysis methodology, the licensing basis changes proposed herein provide additional piping, components and adjustments to optimize the descriptions of the condensate return provisions and provide descriptions of the analysis methodology in the plant-specific DCD.

Tier 1

The added components of the PXS are integral to providing safety-related core decay heat removal during non-LOCA events. Therefore, it is appropriate to apply inspections, test, analyses and acceptance criteria to the added PXS components to provide reasonable assurance that the facility has been constructed and will be operated in conformity with the applicable design criteria, codes and standards.

The downspout screens would support the capability of the PRHR HX to maintain the reactor in a safe shutdown condition by preventing large objects from entering the downspout piping. As required by general design criterion 2 of Appendix A to 10 CFR Part 50, the PXS is designed to withstand the effects of natural phenomena and normal and accident conditions without loss of capability to perform its safety functions. The PXS downspout screens would be safety-related, located on the Nuclear Island; and required to withstand design basis seismic and post-accident operating loads without losing the capability to perform their safety function. The component numbers for the following downspout screens are added to Table 2.2.3-1 to provide assurance that ITAAC design commitments will be met. The resultant change to Tier 1 is shown in Appendix B.

PXS-MY-Y81	PXS-MY-Y85
PXS-MY-Y82	PXS-MY-Y86
PXS-MY-Y83	PXS-MY-Y87
PXS-MY-Y84	PXS-MY-Y88

The downspout piping would support the capability of the PRHR HX to maintain the reactor in a safe shutdown condition by inhibiting containment floodup during PRHR HX operation and delaying the need for containment recirculation following RCS depressurization. As required by general design criterion 4 of Appendix A to 10 CFR Part 50, the PXS containment downspout piping would be safety-related and required to withstand normal and seismic design basis loads without losing functional capability. The additional downspout piping added to the PXS is captured in Table 2.2.3-2 to provide assurance that ITAAC design commitments will be met. The resultant change to Tier 1 is shown in Appendix B.

PXS-L301A	PXS-L306A	PXS-L301B	PXS-L306B
PXS-L302A	PXS-L307A	PXS-L302B	PXS-L307B
PXS-L303A	PXS-L308A	PXS-L303B	PXS-L308B
PXS-L304A	PXS-L309A	PXS-L304B	PXS-L309B
PXS-L305A	PXS-L310A	PXS-L305B	PXS-L310B

General design criteria 34 and 35 require that the PXS be capable of removing core decay and residual heat and provide an abundance of core cooling such that fuel design limits and the RCS

design conditions are not exceeded. As the PXS provides core decay heat removal during design basis events, performance of this safety-related function is confirmed through ITAAC design commitment 8.b. The changes described herein do not change the commitment to complete the performance test of the PRHR HX. No further changes to Tier 1 are required to assure the desired PXS performance is confirmed in this performance test.

Tier 2

Chapter 3: Impacted

The new PXS downspout screens are **AP1000** Safety Class C and Seismic Category I components. These components meet the quality assurance requirements of 10 CFR 50, Appendix B. Additionally, the screens must be demonstrated to have no functional damage following a seismic ground motion exceeding the one-third of the safe shutdown earthquake ground motion before resuming operations in accordance with 10 CFR Part 50, Appendix S. The screens added to Tier 1 Table 2.2.3-1 are also added to Table 3.2-3 to capture these requirements. The markup to Table 3.2-3 is shown in Appendix B.

Pictorial detail of the Polar Crane Girder is shown in DCD Chapter 3. Figure 3.8.2-1 (Sheet 3 of 3) shows the fabrication holes in the top right figure. As the fabrication holes in the PCG would be blocked in the modified configuration, this detail would be removed from this figure. The changes are shown in Appendix B.

Chapter 5: Impacted

In subsection 5.4.11.2, cross reference to Figure 6.3-2 is changed to Figure 6.3-1 for consistency across the chapters. The changes to chapter 5 are shown in Appendix B.

Chapter 6: Impacted

To reflect the changes to the PXS system, the additional downspout piping is captured in the gutter discussions of UFSAR subsection 6.3 and on a new sheet of the PXS piping and instrumentation diagrams (P&IDs). In order to add the new P&ID sheet to the licensing basis, Figure 6.3-1 will be expanded to include all sheets of the PXS P&IDs and Figure 6.3-2 will not be used.

- Subsection 6.3.1.1.1 would be updated to describe the downspouts in the safety-related design criteria.
- Subsection 6.3.2.1.1 will be updated to include the intermediate collection points of the safety-related gutter arrangement.
- Subsections 6.3.2.2.7 and 6.3.2.2.7.1 would be updated to clarify the number of screen sets in the PXS and to which set of screens the criteria in this section apply.
- Subsection 6.3.2.2.7.2 would be updated to clarify the condensate return gutter arrangement related to LOCA operation.
- Figure 6.3-1 will be relabeled Figure 6.3-1 (Sheet 1 of 3). This editorial change is the only change made to this figure. No technical changes are made.
- Figure 6.3-2 will be relabeled Figure 6.3-1 (Sheet 2 of 3). On relabeled Sheet 2, the IRWST gutter has been relocated to a new sheet 3 of the PXS P&IDs. Sheet 2 has been modified to include continuation flags for condensate returning to the IRWST originating

from PXS Collection Boxes A and B in the IRWST gutter.

- Figure 6.3-1 (Sheet 3 of 3) is a new P&ID sheet and will be added to the licensing basis. This new figure shows the relocated IRWST gutter and the screens and piping comprising the PXS downspouts originating from the Polar Crane Girder and internal stiffener.
- Figure 6.3-2 will not be used.
- The Chapter 6 List of Figures will be updated to reflect the PXS figure relabeling and the additional PXS P&ID sheet.
- Reference to Figure 6.3-2 in subsection 6.3.2.1 is changed for consistency.

The changes Chapter 6 are shown in Appendix B.

The WGOTHIC peak containment pressure analysis was considered during the course of testing and analysis for this change; and was determined not to be affected by this change for the following reasons. With regard to peak containment pressure, the limiting design basis event is a double-ended guillotine cold leg break (DECLG) LOCA. The containment peak pressure for the DECLG LOCA case is not sensitive to the time-dependent condensate return, as the peak pressure is reached well before condensate return plays a factor in the event. Additionally, in the later stages of the transient (24 and 72 hours) the beneficial effects of condensate return are not considered in the containment peak pressure and temperature analysis. The current WGOTHIC containment response model assumes condensate that reaches the polar crane girder and internal stiffener is deposited in the containment sump and no longer contributes to the film thickness at lower elevations of the containment wall. Therefore, the containment analysis methodology remains bounding and is consistent with the modified design as described in Section 5.0.

Chapter 14: Impacted

In Table 14.3-2, cross reference to Figure 6.3-2 is changed to Figure 6.3-1 for consistency across the chapters. The changes to Chapter 14 are shown in Appendix B.

Chapter 15: No impact

Chapter 15 design basis transients that credit PRHR HX operation, along with the analysis run time are listed in Table 1. In these analyses, a constant condensate return fraction was used for the safety analysis models supporting Chapter 15. However, though the condensate return fraction has changed, the transient analyses in Chapter 15 bound the plant response expected as a result of the proposed design changes. During the transients which credit PRHR HX operation, there is no impact to the heat transfer rate of the heat exchanger until the point that the water level in the IRWST drops below the top of the tube sheet, reducing the available heat transfer area. For the transient analyses in Chapter 15, the response will not change because even if the time-dependent condensate return fraction were applied, the PRHR HX would remain submerged well beyond the duration of the relevant design basis analyses listed in Table 1.

Table 1

DCD Chapter 15 Design Basis Accidents Crediting PRHR HX Operation

DCD subsection	Transient Name	Run Time
15.2.2	Loss of external electrical load[1]	(2)
15.2.3	Turbine trip[1]	<1 minute
15.2.6	Loss of ac power to the plant auxiliaries	<6.2 hours
15.2.7	Loss of normal feedwater flow	<5.5 hours
15.2.8	Feedwater system pipe break	<3.2 hours
15.5.1	Inadvertent operation of the core makeup tanks during power operation	<8.6 hours
15.5.2	Chemical and volume control system malfunction that increases reactor coolant inventory	<5.7 hours
15.6.3	Steam generator tube rupture	<6.7 hours

1. PRHR HX is not specifically credited in this analysis; but could be relied upon in the long term to support recovery.
2. This transient is bounded by the turbine trip event.

To further analyze the effects of the variable condensate return fraction, Reference 6 presents an independent analysis of PRHR HX performance under various operating conditions. Performance case CD2 tracks IRWST level and RCS temperature with PRHR HX operation under design basis conditions comparable to the Chapter 15 events. Case CD2 considers the changing condensate return fraction as a function of time and predicts PRHR HX performance for durations much longer than the Chapter 15 analyses. Case CD2 confirms that the PRHR HX tubes remain submerged for a duration longer than the recovery time of any of the design basis analyses listed in Table 1. When the PRHR HX tube sheet begins to uncover, the available heat transfer area of the heat exchanger begins to decrease. However, the heat exchanger is sufficiently sized to continue to match decay heat well after uncovery begins. Case CD2 demonstrates the effects of time-dependent condensate return are not important in relation to the time scales of the design basis accidents analyzed in Chapter 15 and confirms there is no cliff in PRHR HX performance that would warrant re-analysis of the Chapter 15 events that credit the PRHR HX.

Chapter 16

The Technical Specification Bases would be updated to include the downspouts in the descriptions of the gutter arrangement.

- The Bases LCO for B 3.3.3 would be updated to reflect the addition of downspouts.
- The Bases Surveillance Requirement for SR 3.5.4.7 would be updated to encompass the entire gutter arrangement, including the downspout screens, in the surveillance.
- The Bases Background for B 3.5.4 would be updated to reflect the addition of

downspouts.

The changes to Chapter 16 are shown in Appendix B.

Chapter 19: Impacted

Per SECY-94-084, the NRC recommends the requirement of 420°F or below as a safe, stable shutdown condition. The results of the shutdown temperature evaluation are represented in DCD Revision 19, subsection 19E.4.10.2, Table 19E.4.10-1 and Figures 19E.4.10-1 through 19E.4.10-4. The original evaluation was performed at best estimate conditions, with a number of conservatisms maintained, and assumed a constant condensate return rate. The plant response after shutdown following non-LOCA events was reanalyzed with a series of interdependent calculations. The information flow between these calculations is illustrated in Figure 9.

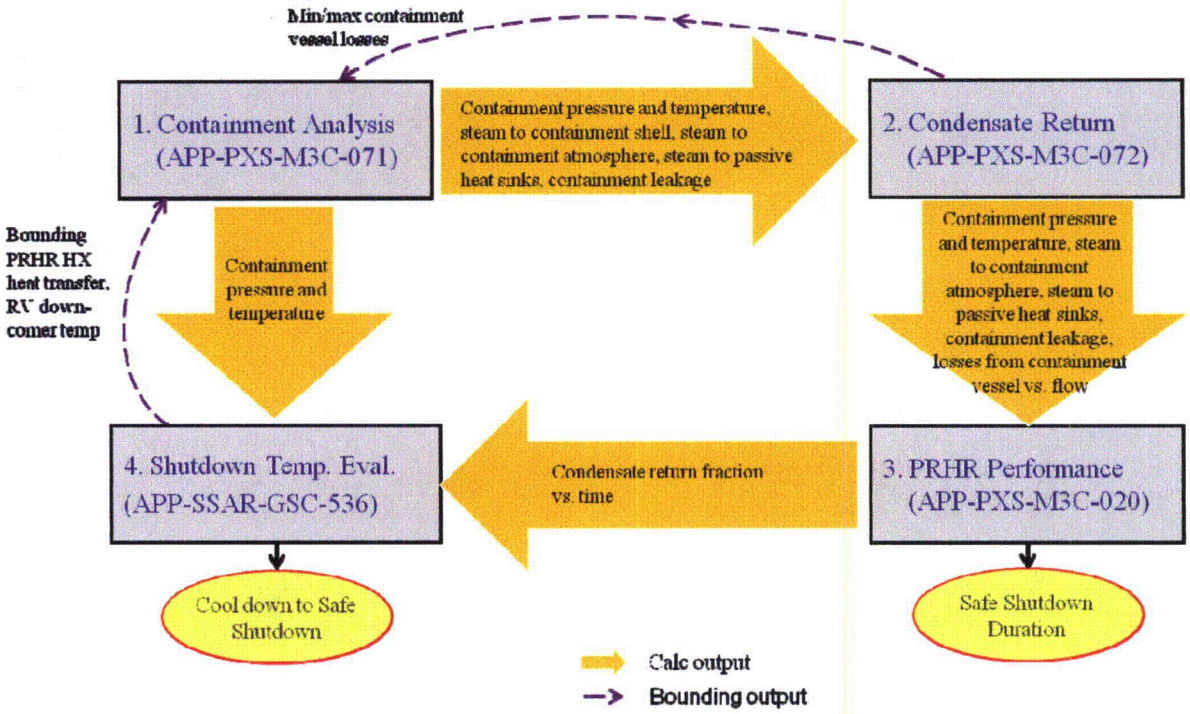

Figure 9: Calculation inter-relationships

The design changes described in Section 5.0 ensure sufficient condensate is returned to the IRWST to preserve PRHR HX performance after shutdown following a non-LOCA event. To verify the effectiveness of the proposed changes to the PXS system, several analyses (discussed in Appendix A) were performed, which incorporate the lessons learned about condensate return from design review and testing. As described in subsection 4.2 of the Shutdown Temperature Evaluation (Reference 7), loss of normal feedwater coincident with loss of ac power event was identified to be the most limiting transient with regard to PRHR HX performance. The Shutdown Temperature Evaluation is performed to demonstrate the adequacy of the PRHR HX to reduce the core average temperature to 420°F within 36 hours after shutdown following a loss of normal feedwater coincident with loss of ac power event. The containment peak pressure and temperature design limits are not challenged by the long-term loss of normal feedwater with loss of ac power event that forms the limiting basis for the safe shutdown temperature evaluation, as

the maximum pressure reached during the loss of normal feedwater coincident with loss of ac power event does not approach the containment design pressure.

Following a loss of ac power event, reactor coolant system energy is slowly transferred to the IRWST following actuation of the PRHR HX. The water in the IRWST will begin to heat up, eventually coming to a boil. The steam released by boiling of the IRWST will cause the containment temperature and pressure to increase. To evaluate the containment response to IRWST steaming and time-dependent condensate return on PRHR HX performance, minor modifications were made to the approved WGOTHIC containment response model to increase condensation and produce conservative results. The Containment Analysis (APP-PXS-M3C-071, reference 8) performed with the WGOTHIC model was used to determine the transient mass of condensate on passive heat sinks, steam in the containment atmosphere, and steam lost to containment leakage. In the Condensate Return calculation (APP-PXS-M3C-072, reference 9), the WGOTHIC results were combined with calculation of losses from the containment shell surfaces to determine a time-dependent rate of condensate return. The variable condensate return rate was used to develop detailed PRHR HX performance parameters (PRHR Performance, APP-PXS-M3C-020, case CD7, reference 6), which were then incorporated into the modified LOFTRAN computer code (described in DCD subsection 15.0.11.2) to produce the analysis for the Shutdown Temperature Evaluation summarized in Appendix 19E. The Shutdown Temperature Evaluation (APP-SSAR-GSC-536, reference 7) and its analytical inputs implementing the variable condensate return fraction produced by the proposed changes demonstrate the efficacy of the proposed changes in helping to bring the RCS temperature to 420°F in less than 36 hours. Therefore, the plant continues to meet its safety-related design criterion and the requirements of SECY-94-084.

Changes to Chapter 19 would include changes to subsection 19E.4.10.2, Shutdown Temperature Evaluation, to describe the analysis methodology for a non-LOCA shutdown event, the time for the cold leg and core average temperatures to reach the specified safe, stable condition after shutdown following a loss of ac power event, and updates to corresponding tables and figures, which further detail the sequence of events. The changes to Chapter 19 are shown in Appendix B.

7.0 Regulatory Evaluation

The design changes and the changes to the licensing basis described in Sections 5.0 and 6.0 were evaluated against the NRC Interim Staff Guidance DC/COL-ISG-011 (Reference 4). That evaluation determined the changes are necessary to reflect a "significant technical correction associated with the design described in the licensing document that, if not changed, would preclude operation within the bounds of the licensing basis" (Reference 4). Specifically, without the changes described in Sections 5.0 and 6.0, the capability of the PRHR HX to maintain the RCS in a safe, stable condition as described in DCD Chapter 19E, "Shutdown Temperature Evaluation," would be challenged. Without the proposed changes, less condensate would be returned to the IRWST and the PRHR HX tubes would uncover sooner than anticipated. PRHR HX performance degrades as the heat exchanger tubes become uncovered. Without the proposed changes, the conclusions of the LOFTRAN shutdown temperature evaluation described in Chapter 19E.4.10.2 of DCD Revision 19 would have been inaccurate. Without the proposed changes, the descriptions of the Chapter 15 non-LOCA analyses would have required revision as well. Therefore, the changes meet the criteria for a change that should not be deferred during review of an application for a combined license.

This section provides an evaluation of the updated PXS condensate return design against the regulations satisfied by the PXS and analyses supporting the PXS design. In addition, a discussion of significant hazard considerations is included for informative purposes.

Applicable Regulatory Requirements and Criteria

Title 10 Code of Federal Regulations, Part 52, Appendix D, Section VIII applies to changes to Tier 1 and Tier 2 changes which involve changes to Tier 1 . The Tier 2 changes to the licensing basis described in Section 6.0 also require departures from Tier 1 information. Therefore, NRC approval is required prior to implementing the changes addressed in this departure.

Appendix A to 10 CFR Part 50:

1) General Design Criterion (GDC) 2, "Design bases for protection against natural phenomena," requires that the PXS be designed to withstand the effects of natural phenomena and normal and accident conditions without loss of capability to perform its safety functions.

   The PXS, including the additional PXS components added for the condensate return function, is designed to meet Seismic Category I design requirements; and is protected from the effects of external events such as earthquakes, tornadoes, and floods.

2) GDC 4, "Environmental and dynamic effects design bases," requires that the PXS be designed to accommodate the effects of and be compatible with the environmental conditions associated with normal operation, maintenance, testing, and postulated accidents, including loss-of-coolant accidents.

   The PXS is designed to accommodate the environmental conditions associated with all modes of operation, and to prevent excessive dynamic events. Additionally, piping line sizes are selected to prevent steam flashing in the downspout piping. The additional piping and screens are constructed of materials compatible with the post-accident environment, consistent with DCD subsection 6.1.1.4.

3) GDC 5, "Sharing of structures, systems, and components," specifies that the PXS is prohibited from being shared among nuclear power units unless it can be demonstrated that sharing will not impair their ability to perform their safety function.

   The PXS contains no components that are shared between nuclear power units. Thus the PXS design to meets the requirements of GDC 5.

4) GDC 17, "Electric power systems," specifies that an onsite electric power system and an offsite electric power system be provided to provide sufficient capacity to ensure that specified acceptable fuel design limits and the design conditions of the reactor coolant pressure boundary (RCPB) are not exceeded and that the core is cooled during anticipated operational occurrences and accident conditions.

   The **AP1000** design does not require ac power sources to mitigate design-basis events. Likewise, the PXS condensate return design relies on natural forces; and does not require power sources to perform its safety-related functions. The components added are passive components maintained in their safety-related configuration for the duration of operation. Thus the **AP1000** design meets the requirements of GDC 17; and continues to support an exemption to the requirement of having two offsite power sources.

5) GDC 27, "Combined reactivity control systems capability," requires the PXS be designed to have a combined capability, in conjunction with poison addition, of reliably controlling reactivity changes to assure that, under postulated accident conditions and with appropriate margin for stuck rods, the capability to cool the core is maintained.

   The proposed changes do not affect the capability of the PXS to control core reactivity with poison addition. The proposed changes do affect the ability of the PXS to provide adequate core cooling by increasing the fraction of condensate returned to the IRWST during an event where steaming from the IRWST to containment occurs.

6) GDC 34, "Residual heat removal," requires the plant be designed with a residual heat removal system to transfer fission product decay heat and other residual heat from the reactor core at a rate such that specified acceptable fuel design limits and the design conditions of the RCPB are not exceeded.

   The PRHR HX is capable of cooling the RCS in accordance with the provisions of SECY-94-084. The changes proposed in this departure assure the percentage of condensate returned to the IRWST over time exceeds the return fraction necessary to ensure adequate PRHR HX performance. With the proposed changes, the updated safe shutdown evaluation demonstrates that the plant complies with its functional requirement of cooling the RCS to 420°F within 36 hours.

7) GDC 35, "Emergency core cooling," requires the PXS be able to provide an abundance of core cooling to transfer heat from the core at a rate so that fuel and clad damage will not interfere with continued effective core cooling.

   The functionality of components of the PXS providing direct injection to the RCS for emergency core cooling is not affected by the changes in this departure. The changes described herein provide assurance the PRHR HX can provide adequate core cooling during non-LOCA events, in conjunction with core makeup tank and accumulator operation. Thus the PXS continues to satisfy GDC 35.

8) GDC 36, "Inspection of emergency core cooling system," requires the PXS be designed to permit appropriate periodic inspection of important components.

   The proposed modifications are accessible to periodic inspections. The proposed piping and downspout screens are accessible for inspection and maintenance as necessary. The PXS continues to comply with GDC 36.

9) GDC 37, "Testing of emergency core cooling system," requires the PXS be designed to permit appropriate periodic pressure and functional testing.

   The proposed modifications do not affect the ability to periodically test the emergency core cooling capability of the PXS. The periodic inspection and testing program for the PXS does not include requirements specifically for testing condensate return to the IRWST since steaming the containment is not practical. However, the added components are accessible for periodic inspection to confirm structural integrity and may be flow tested to confirm overall operability.

10) 10 CFR 50.46 and Appendix K to 10 CFR Part 50, as they relate to analysis of PXS performance, ensure the evaluation is accomplished in accordance with an acceptable evaluation model.

    The proposed design and licensing basis changes ensure the Chapter 6 and Chapter 15 safety analyses are not affected and remain bounding. The design basis analysis methods used to evaluate performance of the PXS include only methods approved for use by the Commission. The changes proposed do not include a new method of analysis.

<u>No Significant Hazards Consideration Determination</u> (provided for informative purposes only)

1) Does the proposed change involve a significant increase in the probability or consequences of an accident previously evaluated?

   Response: No.

   No accident previously evaluated in the plant-specific DCD is attributed to the failure of the condensate return features of the design. The proposed changes add passive components that do not rely on instrumentation and control systems to move them to a safe position. The proposed changes also meet applicable NRC general design criteria requirements. As the proposed changes do not involve any components that could initiate an event by means of component or system failure, the changes do not increase the probability of a previously evaluated accident.

   The added components are constructed of only those materials appropriately suited for exposure to the post-accident environment as described in DCD subsection 6.1.1.4. No aluminum is permitted to be used in the construction of these components to ensure they will not contribute to hydrogen production in containment. The changes do not alter design features available during normal operation or anticipated operational occurrences. Nonsafety-related features used for reactor coolant activity monitoring, or reactor coolant chemistry control remain unaffected. The changes do not adversely impact accident source term parameters or affect any release paths used in the safety analyses, which could increase radiological dose consequences. Thus the radiological releases associated

with the Chapter 15 accident analyses are not affected.

As previously described, the proposed changes would not adversely affect the ability of the PRHR HX to meet the design requirements of GDCs 34 and 35. The proposed equipment does not adversely interact with or affect safety-related equipment or a radioactive material barrier. The components added by this change would not increase the consequences of an accident previously evaluated in the plant-specific DCD.

Therefore, the proposed changes do not involve a significant increase in the probability or consequences of an accident.

2) Does the proposed change create the possibility of a new or different kind of accident from any accident previously evaluated?

Response: No.

An evaluation of the downspout and gutter return subsystem determined the components are capable of acceptably performing their safety-related function, even if one of the downspouts were blocked. The new equipment does not interface with components in other systems that provide safety-related or defense-in-depth support to the plant, thus precluding the possibility condensate could be diverted to another system before reaching the gutter. The affected equipment does not interface with any component whose failure could initiate an accident, or any component that contains radioactive material. The modified components do not incorporate any active features relied upon to support normal operation. The downspout and gutter return components are seismically qualified to remain in place and functional during seismic and dynamic events. Consequently, the proposed component changes do not introduce new failure modes, interactions or dependencies, the malfunction of which could lead to new accident scenarios. Therefore, the proposed changes do not create the possibility for a new or different kind of accident.

3) Does the proposed change involve a significant reduction in a margin of safety?

Response: No.

The proposed changes do not involve a significant reduction in the margin of safety. The proposed changes do not reduce the redundancy or diversity of any safety-related functions. The proposed changes increase the amount of condensate available in the IRWST for heat transfer after shutdown, following a non-LOCA event with long-term loss of AC power. Though the fraction of condensate returned is slightly smaller than originally assumed, the proposed changes provide sufficient condensate return flow to maintain adequate IRWST water level for those events using the PRHR HX cooling function. While slightly lower condensate return rates result in a slightly earlier transition to PRHR HX uncover, the long-term shutdown temperature evaluation results show that the PRHR HX would continue to meet its acceptance criteria.

The DCD Chapters 6 and 15 analyses results are not affected, thus margins to their regulatory acceptance criteria are unchanged. No design basis safety analysis or acceptance criterion is challenged or exceeded by the proposed changes, thus no margin of safety is reduced.

References

1) SECY-94-084, "Policy and Technical Issues Associated With the Regulatory Treatment of Non-Safety Systems in Passive Plant Designs," March 28, 1994
2) Appendix A to Part 50, Title 10 Code of Federal Regulations, General Design Criterion 34 - Residual heat removal
3) APP-GW-GL-700, revision 19, "**AP1000** Design Control Document"
4) DC/COL-ISG-011, Final Interim Staff Guidance, Finalizing Licensing-basis Information, ML092890623, (Notice of Availability, ML092890577, November 2009).
5) WCAP-15846 (proprietary) and WCAP-15862 (nonproprietary), revision 1, "WGOTHIC Application to AP600 and **AP1000**."
6) APP-PXS-M3C-020, revision 3, "PRHR Sizing / Performance," (proprietary).
7) APP-SSAR-GSC-536, revision 2, "**AP1000** Safe Shutdown Temperature Evaluation," (proprietary).
8) APP-PXS-M3C-071, revision 1, "Containment Response Analysis for Long-Term PRHR Operation," (proprietary).
9) APP-PXS-M3C-072, revision 1, "Condensate Return to IRWST for Long Term PRHR Operation," (proprietary).

Appendix A

Summary of Changes to the Technical Basis and Transient Analyses

A.1 Non-LOCA Event Considerations

A station blackout event is postulated to occur less than once during the 60 year lifetime of the **AP1000** plant. This event is postulated to occur as a result of a loss of offsite power, failure of the rapid power reduction system such that the turbine trips and then failure of the Onsite Standby Power System to initiate. This sequence of events results in a complete loss of alternating current (AC), or station blackout, at the site. When this occurs, the reactor will trip on low RCS flow. The wide range level in the steam generators will decrease below the Low setpoint. When this occurs, the protection and safety monitoring system (PMS) will automatically open the normally closed air-operated valves isolating the PRHR HX and initiate flow through the heat exchanger.

Within 2 to 4 hours after transient initiation (the exact time depends on assumptions of the transient analysis), the water in the IRWST will reach saturation due to energy deposition from the PRHR HX. Boiling and steam release from the IRWST will increase the containment pressure and temperature. Note that there is a good chance that AC power (either offsite or onsite) would be recovered in this time frame, such that long term PRHR HX operation is very unlikely. Passive Containment Cooling System (PCS) flow will be delivered through the PCS valves and initiate gravity driven sub-cooled liquid flow to the outside of the containment vessel from the passive containment cooling water storage tank (PCCWST) after the High containment pressure signal is reached. The PCS water flow provides evaporative cooling for the containment shell. Steam released in the containment will condense on the inside surface of the containment shell, and the condensate will be collected in the gutters and returned back to the IRWST.

During this transient, some of the steam that is generated by the PRHR HX will be returned to the IRWST. During the first phase of the transient, the steam which is released into containment from the IRWST will contact surfaces and equipment in containment that are initially at cooler temperatures. As a result, condensation will occur on these surfaces and result in loss of IRWST inventory. This condensation will continue until these structures heat up to the containment temperature. Another way steam will be lost is due to the pressurization of the containment atmosphere. Finally, steam will condense on the containment vessel surface. Most of this steam condensate is expected to drain back into the IRWST through the IRWST gutter. However, some of this condensate will be lost from droplets dripping from the central dome of the containment vessel where the slope of the containment vessel wall is not sufficient to allow the condensate to adhere and flow over to the vertical wall. As the condensate film flows down the vertical containment wall it will flow onto the polar crane girder, the internal stiffener, and the IRWST gutter.

In order to identify all of the important phenomena that result in condensate losses, a phenomena identification and ranking table was developed. The results show that the overall IRWST condensate return rate study should address the following.:

1. Dripping from containment dome surface
   a. Near-horizontal surface dripping
   b. Dripping from interferences (weld plate misalignment, support plates)
2. Losses from the containment sidewalls due to obstacles and entrance to gutter
3. Condensation on passive heat sinks with no drain to IRWST or gutters
4. Steam stored in containment atmosphere
5. Leakage from containment
6. Water entrainment from the IRWST that is not returned to the IRWST

A.2 Supporting Design Documentation

To address the previous items, the following testing program and calculation notes are used. Each of these documents will be available for inspection by the NRC.:

1. **AP1000** Condensate Return Test Report, TR-SEE-III-12-01
2. Containment Response Analysis for the Long Term PRHR Operation, APP-PXS-M3C-071
3. Condensate Return to IRWST for Long Term PRHR Operation, APP-PXS-M3C-072
4. PRHR HX Sizing / Performance, APP-PXS-M3C-020
5. **AP1000** Safe Shutdown Temperature Evaluation, APP-SSAR-GSC-536

The following summarizes the content and purpose of each of these reports and explains the evaluation process established to provide required input for the IRWST condensate return rate analysis.

1. **AP1000** Condensate Return Test Report, TR-SEE-III-12-01

   This document reports the results of experiments performed to evaluate the condensate return rate along the vertical section of the containment vessel wall above the IRWST gutter and the amount of condensate captured by the IRWST gutter. The test configuration, and results are summarized in Section 4.0.

2. Containment Response Analysis for the Long Term PRHR Operation, APP-PXS-M3C-071

   The WGOTHIC **AP1000** containment model was developed to perform the containment peak pressure/temperature response calculations for the design analyses presented in Chapter 6 of the DCD. The approved methodology for that application uses conservative assumptions that tend to reduce the steam condensation heat/mass transfer rates and increase the calculated containment pressure/temperature response. To this end, the model does not take credit for all of the passive heat sinks that are located inside the containment vessel.

   The purpose of the calculations that are documented in APP-PXS-M3C-071 is to quantify the transient mass of condensate on the passive heat sinks, the transient mass of steam in the atmosphere, and the transient mass of steam/air that is lost due to containment leakage. The WGOTHIC **AP1000** containment model is the best tool available for performing these calculations. However, for this application, the heat transfer areas for all of the passive heat sinks in the model must be increased to account for those that were not included for the containment peak pressure/temperature application. In addition, sensitivity studies must be performed to identify the most conservative initial and boundary conditions for this application. The changes that are required to be made to the WGOTHIC **AP1000** containment model for this application will also be described in APP-PXS-M3C-071. The goal of the WGOTHIC calculation note, APP-PXS-M3C-071, is to quantify condensate losses associated with the following thermodynamic phenomena during containment recirculation .:

   - Losses due to condensation on passive heat sinks
   - Mass of steam which remains in the containment free volume
   - Losses due to containment leakage

   The WGOTHIC basedeck uses conservative inputs and initial conditions for the design basis analysis. Sensitivity analyses were performed with several sets of initial conditions/inputs in order to determine the most conservative set of input for the design basis case. The following input/boundary conditions were analyzed.:

- Heat Input to the PRHR HX
- PCS flow, PCS water temperature, PCS water coverage
- Containment vessel heat transfer rates
- PCS actuation time
- IRWST water level, water temperature
- Containment initial pressure, temperature, relative humidity
- Mass of the heat sinks inside the containment

The resulting evaluation in APP-PXS-M3C-071 provides input to APP-PXS-M3C-072.

3. Condensate Return to IRWST for Long Term PRHR Operation, APP-PXS-M3C-072

The purpose of the APP-PXS-M3C-072 calculation note is to provide inputs to the PRHR HX performance calculation, APP-PXS-M3C-020, by evaluating all of the losses associated with the containment shell. This calculation provides the mass of steam that remains in the free containment volume which contributes to pressurization, mass of the steam that will condense on the heat sinks, mass of the steam that will be lost through containment leakage, and inventory losses that will occur on the containment vessel head and containment vessel sidewalls considering test data reported in TR-SEE-III-12-01.

[

]^{a,c} This calculation considers the following phenomena previously identified.

- Dripping from containment inside surface (upper dome), "rain out phenomenon"
- Dripping from containment inside surface (upper dome) due to the containment plates misalignment (interference dripping)
- Obstacle-induced dripping from the containment dome
- Obstacle-induced dripping from the containment sidewalls.
- Water entrainment from the IRWST

4. PRHR HX Sizing / Performance, APP-PXS-M3C-020

The PRHR HX Sizing / Performance calculation note, APP-PXS-M3C-020, is an existing calculation that evaluates the RCS cooldown along with the boiloff of the IRWST water. It takes the resulting output of APP-PXS-M3C-072 and determines a variable IRWST condensate return rate for long term PRHR HX operation.

The PRHR HX sizing and performance calculation determines the IRWST steam flow rate as decay heat is discharged via the heat exchanger. The input from the "Condensate Return to IRWST for Long Term PRHR Operation" calculation note (APP-PXS-M3C-072) is developed and used in the Sizing / Performance calculation to evaluate condensation losses based on the calculated steam flowrate which is boiled off from the IRWST. In addition, the losses due to containment pressurization, heatup of passive heat sinks, and containment leakage are also included as a function of time.

5. **AP1000** Safe Shutdown Temperature Evaluation, APP-SSAR-GSC-536

The safe shutdown temperature evaluation, which is performed with the LOFTRAN computer code and is documented in Chapter 19E of DCD revision 19, demonstrates the capability of the PRHR HX to reduce the core average temperature to 420 °F within 36 hours after shutdown following any design basis transient. The loss of normal feedwater with coincident loss of ac power is the most limiting transient with respect to removal of core

decay heat; and is used to demonstrate that the passive safety systems can bring the plant to a stable, safe condition.

The safe shutdown temperature evaluation relies on the IRWST to reduce the core average temperature, and is therefore sensitive to condensate return rate. The safe shutdown temperature evaluation is being revised to reflect updates incorporated in the approved DCD Revision 19 design, as well as the condensate return insights and design changes described in Sections 4.0 and 5.0 of this report.

A.3 Not used

Appendix B

Marked up pages of the plant-specific DCD

Table 2.2.3-1

Equipment Name	Tag No.	ASME Code Section III	Seismic Cat. I	Remotely Operated Valve	Class 1E/ Qual. Harsh Envir.	Safety-Related Display	Control PMS/ DAS	Active Function	Loss of Motive Power Position
Passive Residual Heat Removal Heat Exchanger (PRHR HX)	PXS-ME-01	Yes	Yes	-	- / -	-	- / -	-	-
Accumulator Tank A	PXS-MT-01A	Yes	Yes	-	- / -	-	- / -	-	-
Accumulator Tank B	PXS-MT-01B	Yes	Yes	-	- / -	-	- / -	-	-
Core Makeup Tank (CMT) A	PXS-MT-02A	Yes	Yes	-	- / -	-	- / -	-	-
CMT B	PXS-MT-02B	Yes	Yes	-	- / -	-	- / -	-	-
IRWST	PXS-MT-03	No	Yes	-	- / -	-	- / -	-	-
IRWST Screen A	PXS-MY-Y01A	No	Yes	-	- / -	-	- / -	-	-
IRWST Screen B	PXS-MY-Y01B	No	Yes	-	- / -	-	- / -	-	-
IRWST Screen C	PXS-MY-Y01C	No	Yes	-	- / -	-	- / -	-	-
Containment Recirculation Screen A	PXS-MY-Y02A	No	Yes	-	- / -	-	- / -	-	-
Containment Recirculation Screen B	PXS-MY-Y02B	No	Yes	-	- / -	-	- / -	-	-
pH Adjustment Basket 3A	PXS-MY-Y03A	No	Yes	-	- / -	-	- / -	-	-
pH Adjustment Basket 3B	PXS-MY-Y03B	No	Yes	-	- / -	-	- / -	-	-
pH Adjustment Basket 4A	PXS-MY-Y04A	No	Yes		- / -		- / -		
pH Adjustment Basket 4B	PXS-MY-Y04B	No	Yes		- / -		- / -		
Downspout Screen 1A	PXS-MY-Y81	No	Yes	-	- / -	-	- / -	-	-
Downspout Screen 1B	PXS-MY-Y82	No	Yes	-	- / -	-	- / -	-	-

Table 2.2.3-1 (cont.)

Equipment Name	Tag No.	ASME Code Section III	Seismic Cat. I	Remotely Operated Valve	Class 1E/ Qual. Harsh Envir.	Safety-Related Display	Control PMS/ DAS	Active Function	Loss of Motive Power Position
Downspout Screen 1C	PXS-MY-Y83	No	Yes	-	- / -	-	- / -	-	-
Downspout Screen 1D	PXS-MY-Y84	No	Yes	-	- / -	-	- / -	-	-
Downspout Screen 2A	PXS-MY-Y85	No	Yes	-	- / -	-	- / -	-	-
Downspout Screen 2B	PXS-MY-Y86	No	Yes	-	- / -	-	- / -	-	-
Downspout Screen 2C	PXS-MY-Y87	No	Yes	-	- / -	-	- / -	-	-
Downspout Screen 2D	PXS-MY-Y88	No	Yes	-	- / -	-	- / -	-	-
CMT A Inlet Isolation Motor-operated Valve	PXS-PL-V002A	Yes	Yes	Yes	Yes/Yes	Yes (Position)	Yes/No	None	As Is
CMT B Inlet Isolation Motor-operated Valve	PXS-PL-V002B	Yes	Yes	Yes	Yes/Yes	Yes (Position)	Yes/No	None	As Is
CMT A Discharge Isolation Valve	PXS-PL-V014A	Yes	Yes	Yes	Yes/Yes	Yes (Position)	Yes/Yes	Transfer Open	Open
CMT B Discharge Isolation Valve	PXS-PL-V014B	Yes	Yes	Yes	Yes/Yes	Yes (Position)	Yes/Yes	Transfer Open	Open
CMT A Discharge Isolation Valve	PXS-PL-V015A	Yes	Yes	Yes	Yes/Yes	Yes (Position)	Yes/Yes	Transfer Open	Open
CMT B Discharge Isolation Valve	PXS-PL-V015B	Yes	Yes	Yes	Yes/Yes	Yes (Position)	Yes/Yes	Transfer Open	Open
CMT A Discharge Check Valve	PXS-PL-V016A	Yes	Yes	No	- / -	No	- / -	Transfer Open/ Transfer Closed	-

Note: Dash (-) indicates not applicable.

Table 2.2.3-2 (cont.)				
Line Name	**Line Number**	**ASME Code Section III**	**Leak Before Break**	**Functional Capability Required**
IRWST screen cross-connect line	PXS-L180A, PXS-L180B	Yes	No	Yes
Containment recirculation line A	PXS-L113A, PXS-L131A, PXS-L132A	Yes	No	Yes
Containment recirculation line B	PXS-L113B, PXS-L131B, PXS-L132B	Yes	No	Yes
IRWST gutter drain line	PXS-L142A, PXS-L142B	Yes	No	Yes
	PXS-L141A, PXS-L141B	Yes	No	No
Downspout drain lines from polar crane girder and internal stiffener to collection box A	PXS-L301A, PXS-L302A, PXS-L303A, PXS-L304A, PXS-L305A, PXS-L306A, PXS-L307A, PXS-L308A, PXS-L309A, PXS-L310A	Yes	No	Yes
Downspout drain lines from polar crane girder and internal stiffener to collection box B	PXS-L301B, PXS-L302B, PXS-L303B, PXS-L304B, PXS-L305B, PXS-L306B, PXS-L307B, PXS-L308B, PXS-L309B, PXS-L310B	Yes	No	Yes

Table 3.2-3 (Sheet 16 of 75)

AP1000 CLASSIFICATION OF MECHANICAL AND FLUID SYSTEMS, COMPONENTS, AND EQUIPMENT

Tag Number	Description	AP1000 Class	Seismic Category	Principal Construction Code	Comments
Passive Core Cooling System (Continued)					
PXS-MY-Y01C	IRWST Screen C	C	I	Manufacturer Std.	Structural frame and attachment use ASME III, Subsection NF criteria. Screen modules use manufacturer std.
PXS-MY-Y02A	Containment Recirculation Screen A	C	I	Manufacturer Std.	Structural frame and attachment use ASME III, Subsection NF criteria. Screen modules use manufacturer std.
PXS-MY-Y02B	Containment Recirculation Screen B	C	I	Manufacturer Std.	Structural frame and attachment use ASME III, Subsection NF criteria. Screen modules use manufacturer std.
PXS-MY-Y03A	pH Adjustment Basket A	C	I	Manufacturer Std.	
PXS-MY-Y03B	pH Adjustment Basket B	C	I	Manufacturer Std.	
PXS-MY-Y03C	pH Adjustment Basket C	C	I	Manufacturer Std.	
PXS-MY-Y03D	pH Adjustment Basket D	C	I	Manufacturer Std.	
PXS-MY-Y81	Downspout Screen 1A	C	I	Manufacturer Std.	
PXS-MY-Y82	Downspout Screen 1B	C	I	Manufacturer Std.	
PXS-MY-Y83	Downspout Screen 1C	C	I	Manufacturer Std.	
PXS-MY-Y84	Downspout Screen 1D	C	I	Manufacturer Std.	
PXS-MY-Y85	Downspout Screen 2A	C	I	Manufacturer Std.	
PXS-MY-Y86	Downspout Screen 2B	C	I	Manufacturer Std.	
PXS-MY-Y87	Downspout Screen 2C	C	I	Manufacturer Std.	
PXS-MY-Y88	Downspout Screen 2D	C	I	Manufacturer Std.	
PXS-PL-V002A	CMT A CL Inlet Isolation	A	I	ASME III-1	
PXS-PL-V002B	CMT B CL Inlet Isolation	A	I	ASME III-1	
PXS-PL-V010A	CMT A Upper Sample	B	I	ASME III-2	
PXS-PL-V010B	CMT B Upper Sample	B	I	ASME III-2	
PXS-PL-V011A	CMT A Lower Sample	B	I	ASME III-2	
PXS-PL-V011B	CMT B Lower Sample	B	I	ASME III-2	

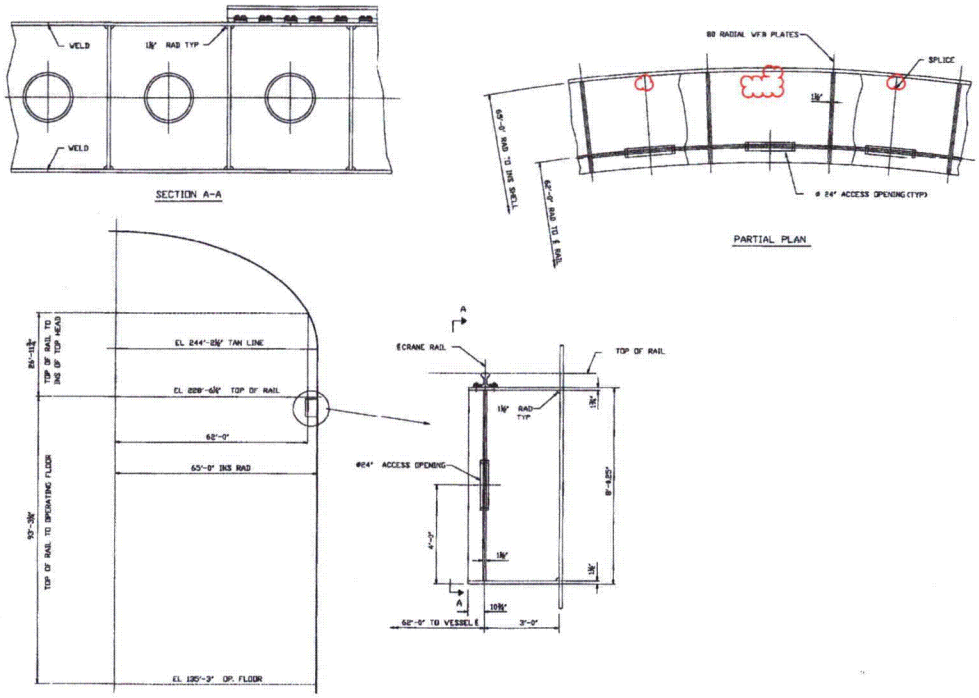

Figure 3.8.2-1 (Sheet 3 of 3)

Containment Vessel General Outline

5.4.11.2 System Description

Each safety valve discharge is directed to a rupture disk at the end of the discharge piping. A small pipe is connected to the discharge piping to drain away condensed steam leaking past the safety valve. The discharge is directed away from any safety related equipment, structures, or supports that could be damaged to the extent that emergency plant shutdown is prevented by such a discharge.

The discharge from each of two groups of automatic depressurization system valves is connected to a separate sparger below the water level in the in-containment refueling water storage tank. The piping and instrumentation diagram for the connection between the automatic depressurization system valves and the in-containment refueling water storage tank is shown in Figure 6.3-1. The in-containment refueling water storage tank is a stainless steel lined compartment integrated into the containment interior structure. The discharge of water, steam, and gases from the first-stage automatic depressurization system valves when used to vent noncondensable gases does not result in pressure in excess of the in-containment refueling water storage tank design pressure. Additionally, vents on the top of the tank protect the tank from overpressure, as described in subsection 6.3.2.

Overflow provisions prevent overfilling of the tank. The overflow is directed into the refueling cavity. The in-containment refueling water storage tank does not have a cover gas and does not require a connection to the waste gas processing system. The normal residual heat removal system provides nonsafety-related cooling of the in-containment refueling water storage tank.

5.4.11.3 Safety Evaluation

The design of the control for the reactor coolant system and the volume of the pressurizer is such that a discharge from the safety valves is not expected. The containment design pressure, which is based on loss of coolant accident considerations, is greatly in excess of the pressure that would result from the discharge of a pressurizer safety valve. The heat load resulting from a discharge of a pressurizer safety valve is considerably less than the capacity of the passive containment cooling system or the fan coolers. See Section 6.2.

Venting of noncondensable gases, including entrained steam and water from the loop seals in the lines to the automatic depressurizations system valves, from the pressurizer into spargers below the water line in the in-containment refueling water storage tank does not result in a significant increase in the pressure or water temperature. The in-containment refueling water storage tank is not susceptible to vacuum conditions resulting from the cooling of hot water in the tank, as described in subsection 6.3.2. The in-containment refueling water storage tank has capacity in excess of that required for venting of noncondensable gases from the pressurizer following an accident.

5.4.11.4 Instrumentation Requirements

The instrumentation for the safety valve discharge pipe, containment, and in-containment refueling water storage tank are discussed in subsections 5.2.5, 5.4.9, and in Sections 6.2 and 6.3, respectively. Separate instrumentation for the monitoring of the discharge of noncondensable gases is not required.

LIST OF FIGURES

- Components are designed and fabricated according to industry standard quality groups commensurate with its intended safety-related functions.
- It is tested and inspected at appropriate intervals, as defined by the ASME Code, Section XI, and by technical specifications.
- It performs its intended safety-related functions following events such as fire, internal missiles or pipe breaks.
- It is protected from the effects of external events such as earthquakes, tornadoes, and floods.
- It is designed to be sufficiently reliable, considering redundancy and diversity, to support the plant core melt frequency and significant release frequency goals.

6.3.1.1 Safety Design Basis

The passive core cooling system is designed to provide emergency core cooling during events involving increases and decreases in secondary side heat removal and decreases in reactor coolant system inventory. Subsection 6.3.3 provides a description of the design basis events. The performance criteria are provided in subsection 6.3.1 and also described in Chapter 15, under the respective event sections.

6.3.1.1.1 Emergency Core Decay Heat Removal

For postulated non-LOCA events, where a loss of capability to remove core decay heat via the steam generators occurs, the passive core cooling system is designed to perform the following functions:

- The passive residual heat removal heat exchanger automatically actuates to provide reactor coolant system cooling and to prevent water relief through the pressurizer safety valves.
- The passive residual heat removal heat exchanger is capable of automatically removing core decay heat following such an event, assuming the steam generated in the in-containment refueling water storage tank is condensed on the containment vessel and returned by gravity via the in-containment refueling water storage tank condensate return gutter and downspouts.
- The passive residual heat removal heat exchanger, in conjunction with the passive containment cooling system, is designed to remove decay heat for an indefinite time in a closed-loop mode of operation. The passive residual heat removal heat exchanger is designed to cool the reactor coolant system to 420°F in 36 hours, with or without reactor coolant pumps operating. This allows the reactor coolant system to be depressurized and the stress in the reactor coolant system and connecting pipe to be reduced to low levels. This also allows plant conditions to be established for initiation of normal residual heat removal system operation.

valves, instrumentation, and other related equipment. The automatic depressurization system valves and spargers, which are part of the reactor coolant system, also provide important passive core cooling functions.

The passive core cooling system is designed to provide adequate core cooling in the event of design basis events. The redundant onsite safety-related class 1E dc and UPS system provides power such that protection is provided for a loss of ac power sources, coincident with an event, assuming a single failure has occurred.

6.3.2.1 Schematic Piping and Instrumentation Diagrams

Figure 6.3-1 shows the piping and instrumentation drawings of the passive core cooling system. Simplified flow diagrams are shown in Figures 6.3-3 and 6.3-4. The accident analysis results of events analyzed in Chapter 15 provide a summary of the expected fluid conditions in the passive core cooling system for the various locations shown on the simplified flow diagrams, for the specific plant conditions identified -- safety injection and decay heat removal.

The passive core cooling system is designed to supply the core cooling flow rates to the reactor coolant system specified in Chapter 15 for the accident analyses. The accident analyses flow rates and heat removal rates are calculated by assuming a range of component parameters, including best estimate and conservatively high and low values.

The passive core cooling system design is based on the six major components, listed in subsection 6.3.2.2, that function together in various combinations to support the four passive core cooling system functions:

- Emergency decay heat removal
- Emergency reactor makeup/boration
- Safety injection
- Containment pH control

6.3.2.1.1 Emergency Core Decay Heat Removal at High Pressure and Temperature Conditions

For events not involving a loss of coolant, the emergency core decay heat removal is provided by the passive core cooling system via the passive residual heat removal heat exchanger. The heat exchanger consists of a bank of C-tubes, connected to a tubesheet and channel head arrangement at the top (inlet) and bottom (outlet). The passive residual heat removal heat exchanger connects to the reactor coolant system through an inlet line from one reactor coolant system hot leg (through a tee from one of the fourth stage automatic depressurization lines) and an outlet line to the associated steam generator cold leg plenum (reactor coolant pump suction).

The inlet line is normally open and connects to the upper passive residual heat removal heat exchanger channel head. The inlet line is connected to the top of the hot leg and is routed continuously upward to the high point near the heat exchanger inlet. The normal water temperature in the inlet line will be hotter than the discharge line.

The outlet line contains normally closed air-operated valves that open on loss of air pressure or on control signal actuation. The alignment of the passive residual heat removal heat exchanger (with a normally open inlet motor-operated valve and normally closed outlet air-operated valves) maintains the heat exchanger full of reactor coolant at reactor coolant system pressure. The water temperature in the heat exchanger is about the same as the water in the in-containment refueling water storage tank, so that a thermal driving head is established and maintained during plant operation.

The heat exchanger is elevated above the reactor coolant system loops to induce natural circulation flow through the heat exchanger when the reactor coolant pumps are not available. The passive residual heat removal heat exchanger piping arrangement also allows actuation of the heat exchanger with reactor coolant pumps operating. When the reactor coolant pumps are operating, they provide forced flow in the same direction as natural circulation flow through the heat exchanger. If the pumps are operating and subsequently trip, then natural circulation continues to provide the driving head for heat exchanger flow.

The heat exchanger is located in the in-containment refueling water storage tank, which provides the heat sink for the heat exchanger.

Although gas accumulation is not expected, there is a vertical pipe stub on the top of the inlet piping high point that serves as a gas collection chamber. Level detectors indicate when gases have collected in this area. There are provisions to allow the operators to open manual valves to locally vent these gases to the in-containment refueling water storage tank.

The passive residual heat removal heat exchanger, in conjunction with the passive containment cooling system, can provide core cooling for an indefinite period of time. After the in-containment refueling water storage tank water reaches its saturation temperature (in about 2 hours), the process of steaming to the containment initiates.

Condensation occurs on the steel containment vessel, which is cooled by the passive containment cooling system. The condensate is collected in a safety-related gutter arrangement. A gutter is located near the operating deck elevation, and a downspout piping system is connected at the polar crane girder and internal stiffener, to collect steam condensate inside the containment during passive containment cooling system operation and return it to the in-containment refueling water storage tank. The gutter normally drains to the containment sump, but when the passive residual heat removal heat exchanger actuates, safety-related isolation valves in the gutter drain line shut and the gutter overflow returns directly to the in-containment refueling water storage tank. Recovery of the condensate maintains the passive residual heat removal heat exchanger heat sink for an indefinite period of time.

The passive residual heat removal heat exchanger is used to maintain a safe shutdown condition. It removes decay heat and sensible heat from the reactor coolant system to the in-containment refueling water storage tank, the containment atmosphere, the containment vessel, and finally to the ultimate heat sink–the atmosphere outside of containment. This occurs after in-containment refueling water storage tank saturation is reached and steaming to containment initiates.

technical specification requirements or follow emergency operating procedures for control of the passive residual heat removal heat exchanger operation.

6.3.2.2.6 Depressurization Spargers

Two reactor coolant depressurization spargers are provided. Each one is connected to an automatic depressurization system discharge header (shared by three automatic depressurization system stages) and submerged in the in-containment refueling water storage tank. Each sparger has four branch arms inclined downward. The connection of the sparger branch arms to the sparger hub are submerged below the in-containment refueling water storage tank overflow level by ≤11.5 feet. The component data for the spargers is shown in Table 6.3-2. The spargers are AP1000 Equipment Class C and are designed to meet seismic Category I requirements.

The spargers perform a nonsafety-related function -- minimizing plant cleanup and recovery actions following automatic depressurization. They are designed to distribute steam into the in-containment refueling water storage tank, thereby promoting more effective steam condensation.

The first three stages of automatic depressurization system valves discharge through the spargers and are designed to pass sufficient depressurization venting flow, with an acceptable pressure drop, to support the depressurization system performance requirements. The installation of the spargers prevents undesirable and/or excessive dynamic loads on the in-containment refueling water storage tank and other structures.

Each sparger is sized to discharge at a flow rate that supports automatic depressurization system performance, which in turn, allows adequate passive core cooling system injection.

6.3.2.2.7 IRWST and Containment Recirculation Screens

The passive core cooling system has two different sets of screens that are used to prevent debris from entering the reactor and blocking core cooling passages during a LOCA: IRWST screens and containment recirculation screens. The screens are AP1000 Equipment Class C and are designed to meet seismic Category I requirements. The structural frames attachment to the building structure, and attachment of the screen modules use the criteria of ASME Code, Section III Subsection NF. The screen modules are fabricated of sheet metal and are designed and fabricated to a manufacturer's standard. The IRWST screens and containment recirculation screens are designed to comply with applicable licensing regulations including:

- GDC 35 of 10 CFR 50 Appendix A
- Regulatory Guide 1.82
- NUREG-0897

The operation of the passive core cooling system following a LOCA is described in subsection 6.3.2.1.3. Proper screen design, plant layout, and other factors prevent clogging of these screens by debris during accident operations.

6.3.2.2.7.1 General Screen Design Criteria

The IRWST screens and containment recirculation screens are designed to comply with the following criteria.

1. Screens are designed to Regulatory Guide 1.82, including:

   - Separate, large screens are provided for each function.
   - Screens are located well below containment floodup level. Each screen provides the function of a trash rack and a fine screen. A debris curb is provided to prevent high density debris from being swept along the floor to the screen face.
   - Floors slope away from screens (not required for AP1000).
   - Drains do not impinge on screens.
   - Screens can withstand accident loads and credible missiles.
   - Screens have conservative flow areas to account for plugging. Operation of the non-safety-related normal residual heat removal pumps with suction from the IRWST and the containment recirculation lines is considered in sizing screens.
   - System and screen performance are evaluated.
   - Screens have solid top cover. Containment recirculation screens have protective plates that are located no more than 1 foot above the top of the screens and extend at least 10 feet in front and 7 feet to the side of the screens. The plate dimensions are relative to the portion of the screens where water flow enters the screen openings. Coating debris, from coatings located outside of the ZOI, is not transported to the containment recirculation screens, to the IRWST screens, or into a direct vessel injection or a cold leg LOCA break that becomes submerged during recirculation considering the use of high density coatings discussed in subsection 6.1.2.1.5.
   - Screens are seismically qualified.
   - Screen openings are sized to prevent blockage of core cooling.
   - Screens are designed for adequate pump performance. AP1000 has no safety-related pumps.
   - Corrosion resistant materials are used for screens.
   - Access openings in screens are provided for screen inspection.
   - Screens are inspected each refueling.

shown that a head loss of 4.1 psi at these flows is acceptable based on long-term core cooling sensitivity analysis.

6.3.2.2.7.2 IRWST Screens

The IRWST screens are located inside the IRWST at the bottom of the tank. Figure 6.3-6 shows a plan view and Figure 6.3-7 shows a section view of these screens. Three separate screens are provided in the IRWST, one at either end of the tank and one in the center. A cross-connect pipe connects all three IRWST screens to distribute flow. The IRWST is closed off from the containment; its vents and overflows are normally closed by louvers. The potential for introducing debris inadvertently during plant operations is limited. A cleanliness program (refer to subsection 6.3.8.1) controls foreign debris from being introduced into the tank during maintenance and inspection operations. The Technical Specifications require visual inspections of the screens during every refueling outage.

The IRWST design eliminates sources of debris from inside the tank. Insulation is not used in the tank. Air filters are not used in the IRWST vents or overflows. Wetted surfaces in the IRWST are corrosion resistant such as stainless steel or nickel alloys; the use of these materials prevents the formation of significant amounts of corrosion products. In addition, the water is required to be clean because it is used to fill the refueling cavity for refueling; filtering and demineralizing by the spent fuel pit cooling system is provided during and after refueling.

During a LOCA, steam vented from the reactor coolant system condenses on the containment shell and drains down the shell to the polar crane girder or internal stiffener where it is drained via downspouts to the IRWST. Steam that condenses below the internal stiffener drains down the shell and is collected in a gutter near the operating deck elevation. It is very unlikely that debris generated by a LOCA can reach the downspouts or the gutter because of their locations. Each downspout inlet is covered with a coarse screen that prevents larger debris from entering the downspout. The gutter is covered with a trash rack which prevents larger debris from clogging the gutter or entering the IRWST through the two 4-inch drain pipes. The inorganic zinc coating applied to the inside surface of the containment shell is safety – Service Level I, and will stay in place and will not detach.

The design of the IRWST screens reduces the chance of debris reaching the screens. The screens are oriented vertically such that debris that settles out of the water does not fall on the screens. The lowest screening surface of the IRWST screens is located 6 inches above the IRWST floor to prevent high density debris from being swept along the floor by water flow to the IRWST screens. The screen design provides the trash rack function. This is accomplished by the screens having a large surface area to prevent a single object from blocking a large portion of the screen and by the screens having a robust design to preclude an object from damaging the screen and causing by-pass. The screen prevents debris larger than 0.0625 inch from being injected into the reactor coolant system and blocking fuel cooling passages. The screen is a type that has sufficient surface area to accommodate debris that could be trapped on the screen. The design of the IRWST screens is described further in APP-GW-GLN-147 (Reference 4).

The screen flow area is conservatively designed considering the operation of the nonsafety-related normal residual heat removal system pumps which produce a higher flow than the safety-

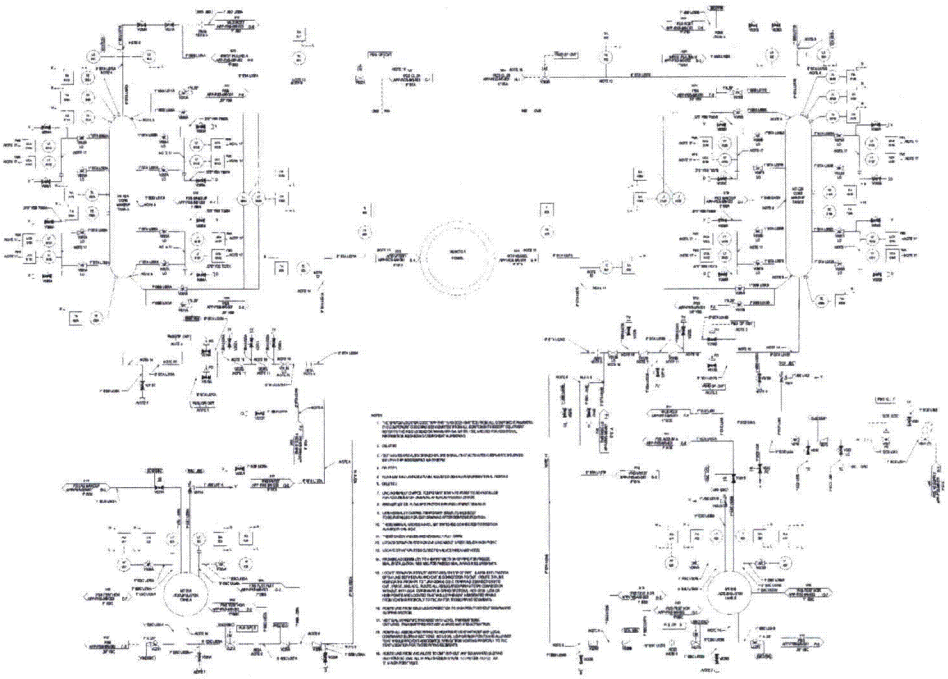

Figure 6.3-1

Passive Core Cooling System
Piping and Instrumentation Diagram (Sheet 1 of 3)

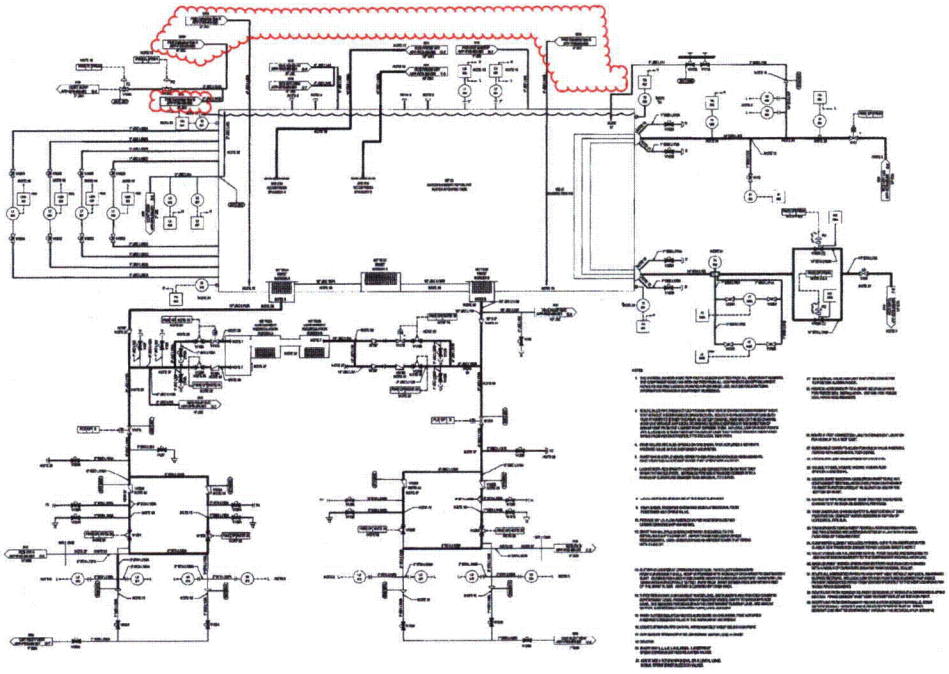

Figure 6.3-1

Passive Core Cooling System
Piping and Instrumentation Diagram (Sheet 2 of 3)

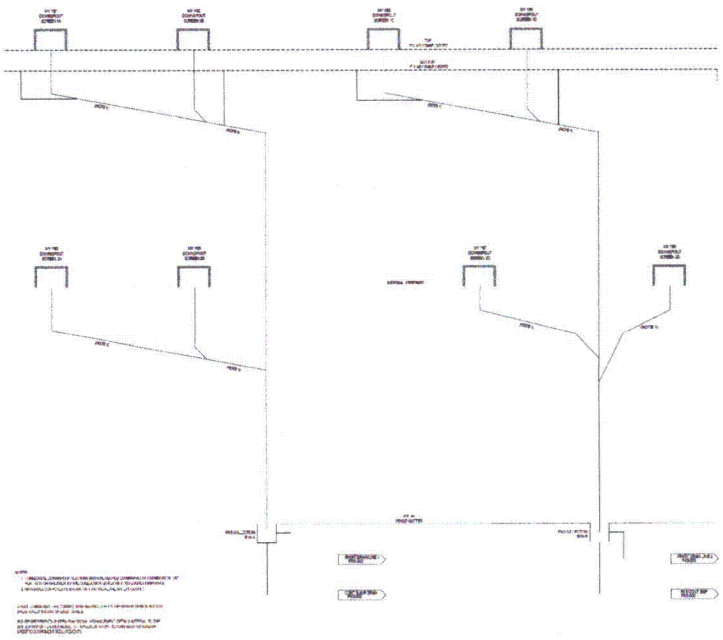

Figure 6.3-1

Passive Core Cooling System
Piping and Instrumentation Diagram (Sheet 3 of 3)
(REF) PXS 005

Figure 6.3-2 not used.

(Renumbered as Figure 6.3-1, Sheet 2)

Table 14.3-2 (Sheet 7 of 17)

DESIGN BASIS ACCIDENT ANALYSIS

Reference		Design Feature	Value
Section	6.3.6.1.3	The bottom of the in-containment refueling water storage tank is located above the direct vessel injection nozzle centerline (ft).	≥ 3.4
Section	6.3.6.1.3	The pH baskets are located below plant elevation 107′ 2″.	
Figure	6.3-1	The passive core cooling system has two direct vessel injection lines.	
Table	6.3-2	The passive core cooling system has two core makeup tanks, each with a minimum required volume (ft^3).	2500
Table	6.3-2	The passive core cooling system has two accumulators, each with a minimum required volume (ft^3)	2,000
Table	6.3-2	The passive core cooling system has an in-containment refueling water storage tank with a minimum required water volume (ft^3)	73,900
Section	6.3.2.2.3	The containment floodup volume for a LOCA in PXS room B has a maximum volume (ft^3) (excluding the IRWST) below a containment elevation of 108 feet.	73,500
Table	6.3-2	Each sparger has a minimum discharge flow area (in^2).	≥ 274
Table	6.3-2	The passive core cooling system has two pH adjustment baskets each with a minimum required volume (ft^3).	280
Section	14.2.9.1.3f	The passive residual heat removal heat exchanger minimum natural circulation heat transfer rate (Btu/hr) - With 520°F hot leg and 80°F IRWST - With 420°F hot leg and 80°F IRWST	 ≥ 1.78 E+08 ≥ 1.11 E+08
Section	6.3.6.1.3	The centerline of the HX's upper channel head is located above the HL centerline (ft).	≥ 26.3
Figure	6.3-1	The CMT level sensors (PXS-11A/B/C/D, -12A/B/C/D, -13A/B/C/D, and -14A/B/C/D) upper level tap centerlines are located below the centerline of the upper level tap connection to the CMTs (in).	1″ ± 1″
Figure	6.3-1	The CMT inlet lines (cold leg to high point) have no downward sloping sections.	
Figure	6.3-1	The maximum elevation of the CMT injection lines between the connection to the CMT and the reactor vessel is the connection to the CMTs.	
Figure	6.3-1	The PRHR inlet line (hot leg to high point) has no downward sloping sections.	

Table 14.3-2 (Sheet 8 of 17)

DESIGN BASIS ACCIDENT ANALYSIS

Reference	Design Feature	Value
Figure 6.3-1	The maximum elevation of the IRWST injection lines (from the connection to the IRWST to the reactor vessel) and the containment recirculation lines (from the containment to the IRWST injection lines) is less than the bottom inside surface of the IRWST.	
Figure 6.3-1	The maximum elevation of the PRHR outlet line (from the PRHR to the SG) is less than the PRHR lower channel head top inside surface.	
Section 7.1.2.10	Isolation devices are used to maintain the electrical independence of divisions and to see that no interaction occurs between nonsafety-related systems and the safety-related system. Isolation devices serve to prevent credible faults in circuit from propagating to another circuit.	
Section 7.1.4.2	The ability of the protection and safety monitoring system to initiate and accomplish protective functions is maintained despite degraded conditions caused by internal events such as fire, flooding, explosions, missiles, electrical faults and pipe whip.	
Section 7.1.2	The flexibility of the protection and safety monitoring system enables physical separation of redundant divisions.	
Section 7.2.2.2.1	The protection and safety monitoring system initiates a reactor trip whenever a condition monitored by the system reaches a preset level.	
Section 7.2.2.2.8	The reactor is tripped by actuating one of two manual reactor trip controls from the main control room.	
Section 7.3.1.2.2	The in-containment refueling water storage tank is aligned for injection upon actuation of the fourth stage automatic depressurization system via the protection and safety monitoring system.	
Section 7.3.1.2.3	The core makeup tanks are aligned for operation on a safeguards actuation signal or on a low-2 pressurizer level signal via the protection and safety monitoring system.	
Section 7.3.1.2.4	The fourth stage valves of the automatic depressurization system receive a signal to open upon the coincidence of a low-2 core makeup tank water level in either core makeup tank and low reactor coolant system pressure following a preset time delay after the third stage depressurization valves receive a signal to open via the protection and safety monitoring system.	

BASES

LCO (continued)

10. Pressurizer Level and Associated Reference Leg Temperature

Pressurizer level is provided to monitor the RCS coolant inventory. During an accident, operation of the safeguards systems can be verified based on coolant inventory indicators.

The reference leg temperature is included in the Technical Specification since it is used to compensate the level signal.

11. In-Containment Refueling Water Storage Tank (IRWST) Water Level

The IRWST provides a long term heat sink for non-LOCA events and is a source of injection flow for LOCA events. When the IRWST is a heat sink, the level will change due to increased volume associated with the temperature increase. When saturation temperature is reached, the IRWST will begin steaming and initially lose mass to the containment atmosphere until condensation occurs on the steel containment shell which is cooled by the passive containment cooling system. The condensate is returned to the IRWST via a gutter and downspouts.

During a LOCA, the IRWST is available for injection. Depending on the severity of the event, when a fully depressurized RCS has been achieved, the IRWST will inject by gravity flow.

12. Passive Residual Heat Removal (PRHR) Flow and PRHR Outlet Temperature

PRHR Flow is provided to monitor primary system heat removal during accident conditions when the steam generators are not available. PRHR provides primary protection for non-LOCA events when the normal heat sink is lost.

PRHR outlet temperature is provided to monitor primary system heat removal during accident conditions when the steam generators are not available. PRHR provides primary protection for non-LOCA events when the normal heat sink is lost.

13, 14, 15, 16. Core Exit Temperature

Core Exit Temperature is provided for verification and long term surveillance of core cooling.

B 3.5 PASSIVE CORE COOLING SYSTEM (PXS)

B 3.5.4 Passive Residual Heat Removal Heat Exchanger (PRHR HX)–Operating

BASES

BACKGROUND

The normal heat removal mechanism is the steam generators, which are supplied by the startup feedwater system. However, this path utilizes non-safety related components and systems, so its failure must be considered. In the event the steam generators are not available to remove decay heat for any reason, including loss of startup feedwater, the heat removal path is the PRHR HX (Ref. 1).

The principle component of the PRHR HX is a 100% capacity heat exchanger mounted in the In-containment Refueling Water Storage Tank (IRWST). The heat exchanger is connected to the Reactor Coolant System (RCS) by a inlet line from one RCS hot leg, and an outlet line to the associated steam generator cold leg channel head. The inlet line to the passive heat exchanger contains a normally open, motor operated isolation valve. The outlet line is isolated by two parallel, normally closed air operated valves, which fail open on loss of air pressure or control signal. There is a vertical collection point at the top of the common inlet piping high point which serves as a gas collector. It is provided with level detectors that indicate when noncondensible gases have collected in this area. There are provisions to manually vent these gases to the IRWST.

In order to preserve the IRWST water for long-term PRHR HX operation, downspouts and a gutter are provided to collect and return water to the IRWST that has condensed on the inside surface of the containment shell. During normal plant operation, any water collected by the downspouts or gutter is directed to the normal containment sump. During PRHR HX operation, redundant series air operated valves are actuated to block the draining of condensate to the normal sump and to force the condensate into the IRWST. These valves fail closed on loss of air pressure or control signal.

The PRHR HX size and heat removal capability is selected to provide adequate core cooling for the limiting non-LOCA heatup Design Basis Accidents (DBAs) (Ref. 2). The Probability Risk Assessment (PRA) (Ref. 3) shows that PRHR HX is not required assuming that passive feed and bleed is available. Passive feed and bleed uses the Automatic Depressurization System (ADS) for bleed and the CMTs/accumulators/ IRWST for feed.

BASES

SURVEILLANCE REQUIREMENTS (continued)

SR 3.5.4.7

This surveillance requires visual inspection of the IRWST gutters and downspout screens to verify that the return flow to the IRWST will not be restricted by debris. A Frequency of 24 months is adequate, since there are no known sources of debris with which the gutters or downspout screens could become restricted.

REFERENCES

1. Section 6.3, "Passive Core Cooling System."
2. Chapter 15, "Safety Analysis."
3. AP1000 PRA.

- The Standard Review Plan (Reference 12) no longer includes the atmospheric releases from radioactive gas waste system failure and radioactive liquid waste system leak or failure events as part of the review. As discussed in subsections 15.7.1 and 15.7.2, no analysis for these events is provided.

- Release of radioactivity to the environment due to a liquid tank failure is addressed in subsection 15.7.3 and is not mode dependent.

- The fuel handling accident described in subsection 15.7.4, while not mode dependent, is analyzed in the applicable and bounding mode and accounts for spent fuel pool boiling. This accident analysis bounds radioactivity releases from other Chapter 15 events during low power and shutdown operations. The LOCA analysis results show PCT remains below 2200°F, and there are no fuel cladding failures.

- The spent fuel cask drop accident described in subsection 15.7.5 is not mode dependent.

- Appendix 15A contains the evaluation models and parameters that form the basis of the radiological consequences analyses for the various postulated accidents. This methodology applies in all modes of operation.

In summary, there are no shutdown risks associated with the radiological consequences methodology or parameters, or the postulated or applicable events, which need to be considered outside the scope of what is already analyzed for Section 15.7.

19E.4.10 Other Evaluations and Analyses

19E.4.10.1 Low Temperature Overpressure Protection

For the AP1000, the normal residual heat removal system (RNS) suction relief valve is located immediately downstream of the RCS suction isolation valves. This relief valve protects the RNS from overpressurization and provides low temperature overpressure protection (LTOP) for the RCS components when the RNS is aligned to the RCS to provide decay heat removal during plant shutdown and startup operations. The RNS relief valve is sized to provide LTOP by limiting the RCS and RNS pressure to less than the 10 CFR 50 Appendix G (Reference 13) steady-state pressure limit. Subsection 5.2.2 provides a discussion of the AP1000 low temperature overpressure protection design bases.

19E.4.10.2 Shutdown Temperature Evaluation

In SECY-94-084, Item C, Safe Shutdown (Reference 14), the NRC staff recommended the Commission's approval of 420°F or below, rather than cold shutdown condition as a safe stable condition, which the PRHR HX must be capable of achieving and maintaining following non-LOCA events, predicated on acceptable passive safety system performance and an acceptable resolution of the regulatory treatment of nonsafety systems (RTNSS) issue. The NRC requested a safety analysis to demonstrate that the passive systems can bring the plant to a stable safe condition and maintain this condition so that no transients will result in the specified acceptable fuel design limit and pressure boundary design limit being violated and that no high-

energy piping failure being initiated from this condition results in 10 CFR 50.46 (Reference 15) criteria.

As discussed in subsection 7.4.1.1, the PRHR HX operates to reduce the RCS temperature to the safe shutdown condition following an event. An analysis of the loss of ac power event demonstrates that the passive systems can bring the plant to a stable safe condition following postulated transients. A bounding analysis is represented in Figures 19E.4.10-1 through 19E.4.10-4. The progression of this event is outlined in Table 19E.4.10-1.

The performance of the PRHR HX is affected by the containment pressure. Containment pressure determines the PRHR HX heat sink (the IRWST water) temperature. The WGOTHIC containment response model described in subsection 6.2.1.1.3 was used to determine the containment pressure response to this transient, which was used as an input to the plant cooldown analysis performed with LOFTRAN.

The PRHR HX performance is also affected by the IRWST water level when the level drops below the top of the PRHR HX tubes. The IRWST water level is affected by the heat input from the PRHR HX and by the amount of steam that leaves the IRWST and does not return to the IRWST through the IRWST gutter arrangement. The principal steam condensate losses include steam that stays in the containment atmosphere, steam that condenses on heat sinks inside containment other than the containment vessel, and dripping or splashing losses due to obstructions on the inner containment vessel wall. The WGOTHIC containment response model also provided the mass balance with respect to the steam lost to the containment atmosphere and to condensation on passive heat sinks other than the containment vessel. The WGOTHIC analysis inputs (including the mass of the heat sinks and heat transfer rates) were biased to increase steam condensate losses. The efficiency of the gutter collection system was determined separate from the WGOTHIC analysis. The resulting time-dependent condensate return rate was incorporated into the LOFTRAN computer code described in subsection 15.0.11.2 to demonstrate that the RCS could be cooled to 420°F within 36 hours.

Summarizing this transient, the loss of normal ac power occurs, followed by the reactor trip. The PRHR heat exchanger is actuated on the low steam generator narrow range level coincident with low startup feed water flow rate signal. Eventually a safeguards actuation signal is actuated on Low cold leg temperature and the CMTs are actuated.

Once actuated, at about 2,400 seconds, the CMTs operate in recirculation mode, injecting cold borated water into the RCS. In the first part of their operation, due to the cold flow rate, the CMTs operate in conjunction with the PRHR to reduce RCS temperature. Due to the primary system cooldown, the PRHR heat transfer capability drops below the decay heat and the RCS cooldown is essentially driven by the CMT cold injection flow. However, at about 5,000 seconds, the CMT cooling effect decreases and the RCS starts heating up again (Figure 19.E.4.10-1). The RCS temperature increases until the PRHR HX can match decay heat. At about 34,500 seconds, the PRHR heat transfer matches decay heat and it continues to operate to reduce the RCS temperature to below 420°F within 36 hours. As seen from Figure 19E.4.10-1, the cold leg temperature in the loop with the PRHR is reduced to 420°F within 48,600 seconds, while the core average temperature reaches 420°F within 124,400 seconds (approximately 34.6 hours).

As discussed in subsection 7.4.1.1, a timer is used to automatically actuate the automatic depressurization system if offsite and onsite power are lost for about 24 hours. This timer automates putting the open loop cooling features into service prior to draining the Class 1E dc 24-hour batteries that operate the ADS valves. Prior to 22 hours, if the plant conditions indicate that the ADS would not be needed until well after 24 hours, the operators are directed to de-energize all loads on the 24-hour batteries. This action will block actuation of the ADS and preserves the ability to align open loop cooling at a later time. Operation of the ADS in conjunction with the CMTs, accumulators, and IRWST reduces the RCS pressure and temperature to below 420°F.

19E.5 Technical Specifications

While the Technical Specification guidance provided in NUREG-1449 (Reference 2) relates to existing plant shutdown operation concerns, the underlying concerns relating to causes of events and recovery from those events during shutdown operations are applicable to the AP1000. Section 19E.5.1 summarizes the shutdown Technical Specifications. Section 19E.5.2 summarizes the AP1000's compliance with SECY-93-190 (Reference 16).

19E.5.1 Summary of Shutdown Technical Specifications

The content of the AP1000 Technical Specifications meets the requirements of 10 CFR 50.36 (Reference 17) and is consistent with the guidance provided in NUREG-1431 (Reference 18). For the AP1000, passive systems are used to safely shut down the plant. Because this design feature is different from existing plants, and because NUREG-1449 provides a reasonable basis for creating shutdown Technical Specifications, the AP1000 Technical Specifications are improved to include specifications for these systems in the shutdown modes. These shutdown specifications are summarized in AP1000 Technical Specification Table B 3.0-1 (Section 16.1), which provides the passive systems shutdown mode matrix of system versus limiting conditions for operation (LCO), mode applicability, and required end state.

19E.6 Shutdown Risk Evaluation

The "AP1000 Probabilistic Risk Assessment (PRA)" (Chapter 19) provides an assessment of the plant risk associated with events at shutdown.

19E.7 Compliance with NUREG-1449

The Diablo Canyon event of April 10, 1987, and the loss of ac power event at the Vogtle plant on March 20, 1990, led the Nuclear Regulatory Commission (NRC) staff to issue NUREG-1449, "Shutdown and Low Power Operation at Commercial Nuclear Power Plants in the United States" (Reference 2), to provide an evaluation of the shutdown risk issue. The scope of NUREG-1449 includes subjects such as operating experiences as documented in generic letters, operator training, technical specifications, residual heat removal capacity, temporary reactor coolant boundaries, rapid boron dilution, containment capacity, fire protection, outage planning and control, and instrumentation.

The NRC requested Westinghouse to assess the compliance of AP600 with NUREG-1449. It was recognized that some of the issues discussed in NUREG-1449 are the responsibility of the plant

Table 19E.4.10-1

SEQUENCE OF EVENTS FOLLOWING A LOSS OF AC POWER FLOW WITH CONDENSATE FROM THE CONTAINMENT SHELL BEING RETURNED TO THE IRWST

Event	Time (seconds)
Feedwater is Lost	10.0
Low Steam Generator Water Level (Narrow-Range) Reactor Trip Setpoint Reached	< 60
Rods Begin to Drop	< 61
Low Steam Generator Water Level (Wide-Range) Reached	< 230
PRHR HX Actuation on Low Steam Generator Water Level (Narrow-Range Coincident with Low Startup Feedwater Flow)	< 240
Low T_{cold} Setpoint Reached	< 2,400
Steam Line Isolation on Low T_{cold} Signal	< 2,400
CMTs Actuated on Low T_{cold} Signal	< 2,400
IRWST Reaches Saturation Temperature	< 15,500
Heat Extracted by PRHR HX Matches Core Decay Heat	< 34,500
CMTs Stop Recirculating	--
Cold Leg Temperature Reaches 420°F (loop with PRHR)	< 48,600
Core Average Temperature Reaches 420°F	< 124,400

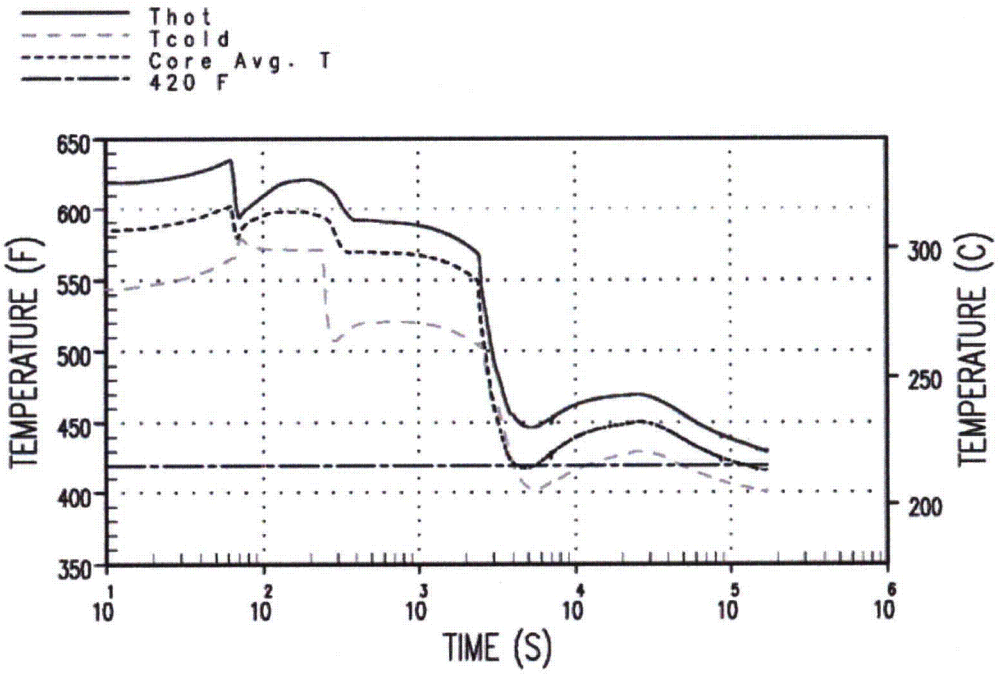

Figure 19E.4.10-1

Shutdown Temperature Evaluation, RCS Temperature

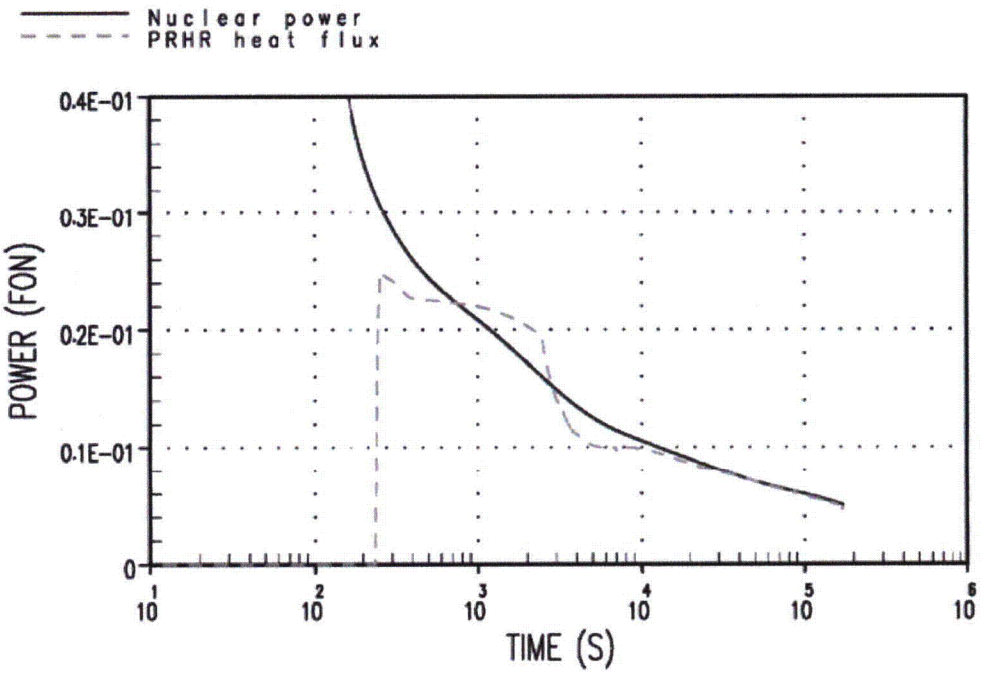

Figure 19E.4.10-2

Shutdown Temperature Evaluation, PRHR Heat Transfer

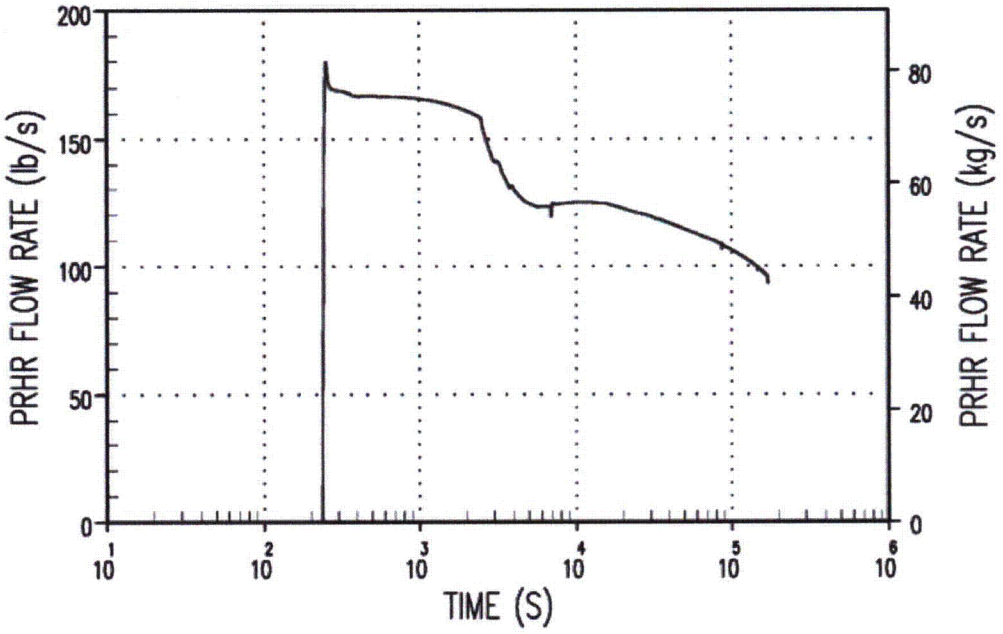

Figure 19E.4.10-3

Shutdown Temperature Evaluation, PRHR Flow Rate

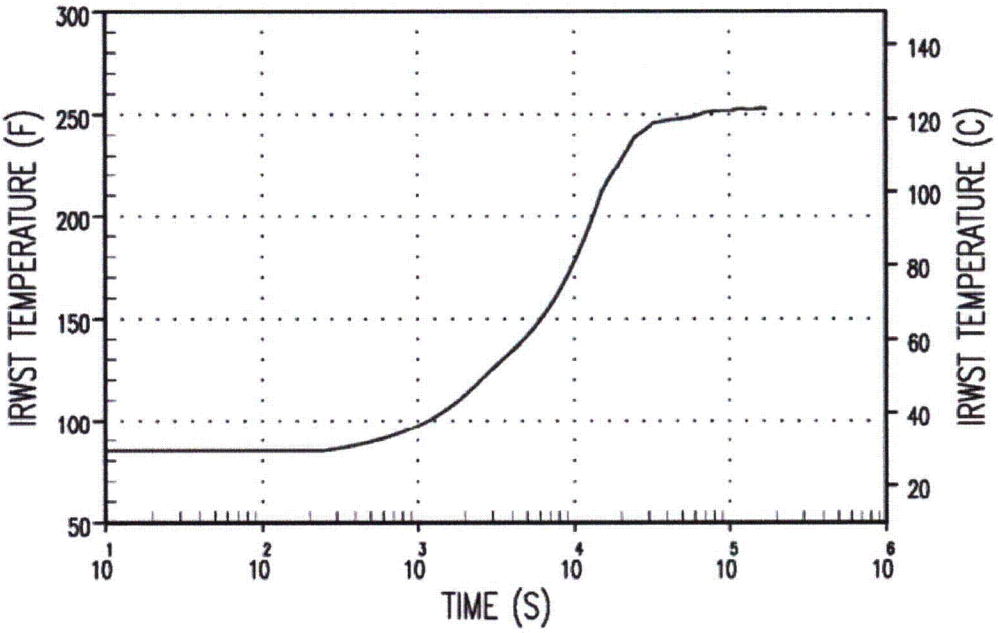

Figure 19E.4.10-4

Shutdown Temperature Evaluation, IRWST Heatup