Review and Assessment of Techniques for Monitoring Environmental Conditions and Stress Corrosion Cracking of Spent Fuel Storage Canisters

Xihua (Shē-wǎ) He,[1] Leonardo Caseres,[2] Pavan Shukla,[1] Yi-Ming Pan,[1] Greg Willden,[2] Darrell Dunn,[3] Greg Oberson[3]

[1]Center for Nuclear Waste Regulatory Analyses
[2]Southwest Research Institute®
San Antonio, Texas

[3]U.S. Nuclear Regulatory Commission
Washington, DC

CNWRA
A center of excellence in earth sciences and engineering®

NACE 2014, San Antonio, Texas
March 9–13, 2014

Outline

- Background
- Objectives of the investigation
- Monitoring techniques
  - Temperature
  - Humidity
  - Chloride concentration
  - Stress corrosion cracking
- Summary

Dry Cask Storage Systems (DCSS)

- Most DCSSs are canister based, spent fuel is placed in a welded austenitic stainless steel canister stored inside a concrete vault or overpack
- Airborne chemical species could deposit on the canisters through cooling vents

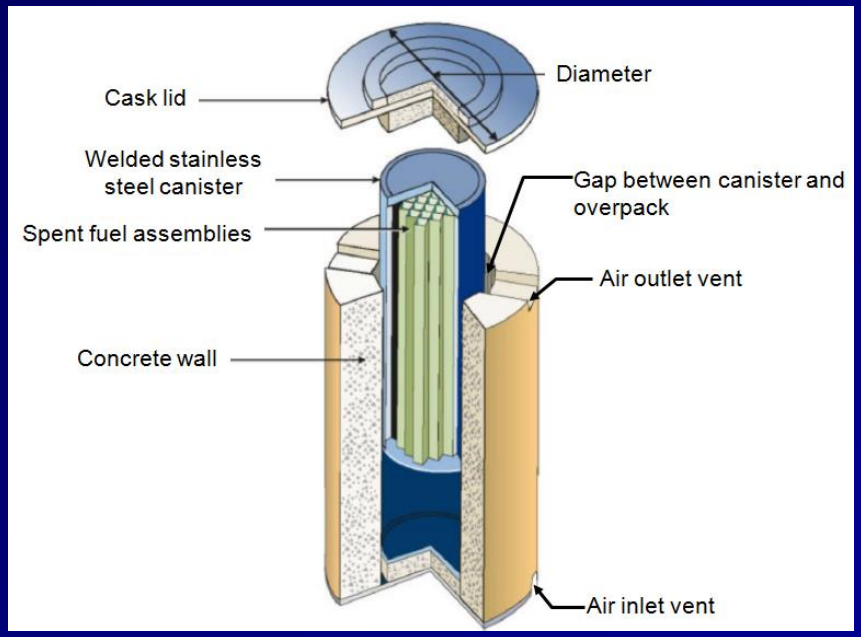

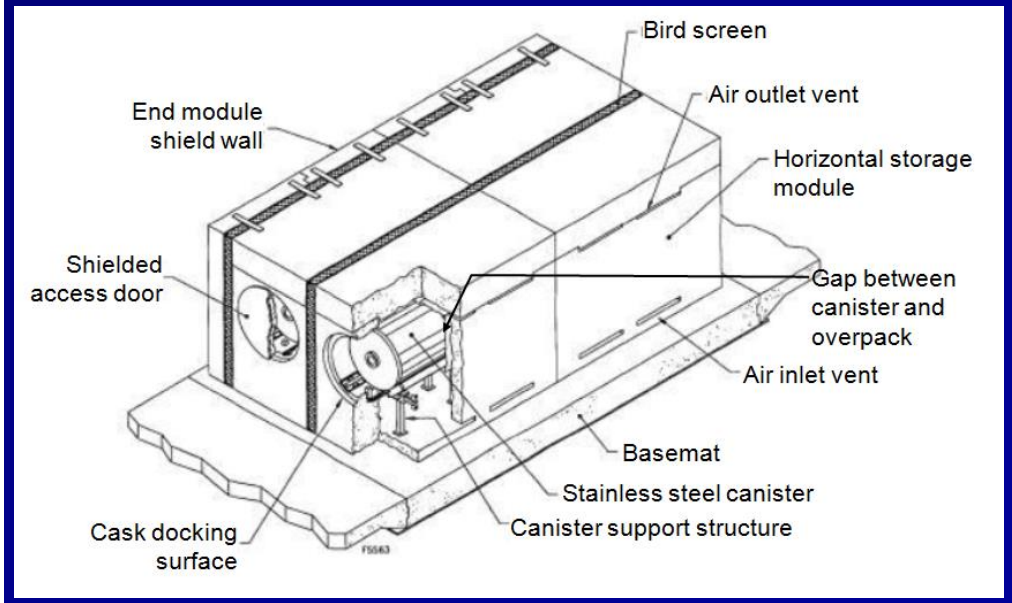

Schematics of vertical and horizontal canister-based systems

Possibly Monitoring Stress Corrosion Cracking of DCSS

- When exposed to certain brines, austenitic stainless steel has exhibited susceptibility to stress corrosion cracking (SCC), which could compromise the integrity of the canister
- NRC identified SCC as one of the three top priority degradation mechanisms that need to be addressed
- Little knowledge of current conditions of deployed canisters
- Limited inspections and monitoring to date
- Canisters are not easily inspected because of confined spaces and high radiation fields
- Functional monitoring of DCSS was identified as one of the top priority, crosscutting issues

Objectives of the Investigation

- Review and assess the current state of technology for directly monitoring important environmental conditions affecting SCC, as well as crack initiation and propagation

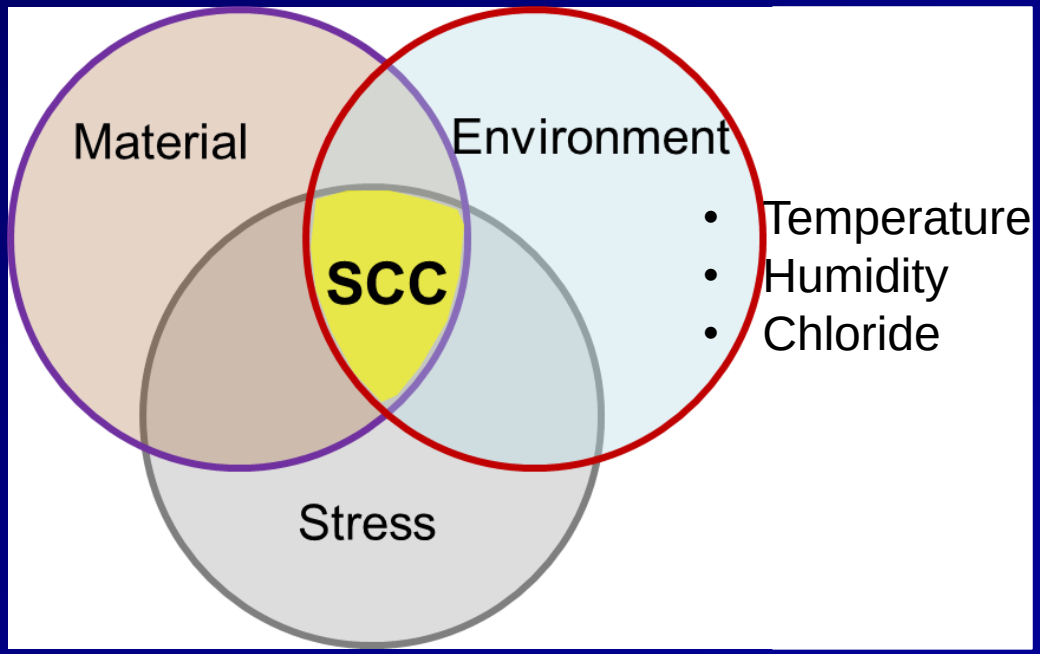

- Support the development of technical bases for evaluating monitoring technologies which may be proposed by the industry

Potentially Suitable Temperature Monitoring Techniques

- Thermocouples
- Resistance temperature detectors
- Radiation thermometers
- Ultrasonic temperature measurement
- Fiber optic temperature sensors
- Silicon temperature sensors
- Thermistors
- Johnson noise thermometers

Reviewed in the paper

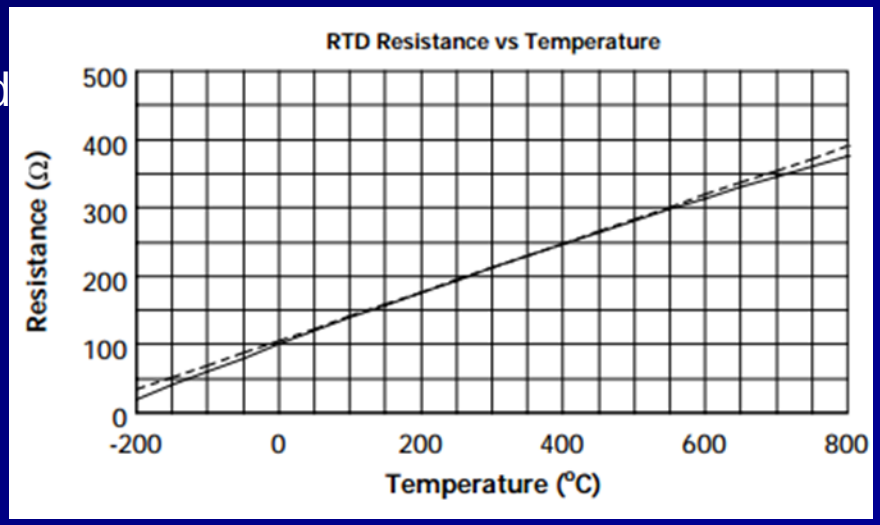

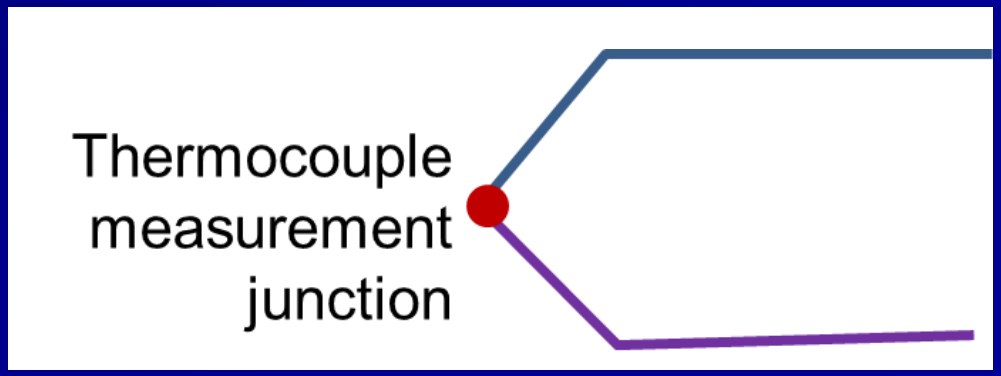

Temperature Monitoring Techniques: Maturity, Measurement Range, Strengths, and Weaknesses

Features	Thermocouples	Resistance temperature detectors	Ultrasonic Measurement	Fiber Optic Sensors
Maturity	Field deployed for nuclear		Field deployed for nuclear	Field deployed for non-nuclear
Temperature measurement range	Up to 1,700 °C [3092 °F]*	0 to 482 °C [32 to 900 °F]	Up to melting point of the material under test	Several thousand Celsius degrees*
Strengths	Mature technique, small size, high tolerance to temperature and radiation, long lifetime		Mature technique, high-temperature tolerance	Mature technique, high tolerance to temperature
Weaknesses	Good thermal bonds are essential for surface temperature measurements		Low radiation tolerance	Potential fiber darkening and embrittlement

***Varies depending on the type**

Potentially Suitable Humidity Monitoring Techniques

- Capacitance-based humidity sensors
- Chilled-mirror-based humidity sensors
- Electrical-resistance-based humidity sensors
- Leakage-based monitoring

Capacitance-based humidity probe and meter

Measurement Principle of a Chilled-Mirror-Based Humidity Sensor

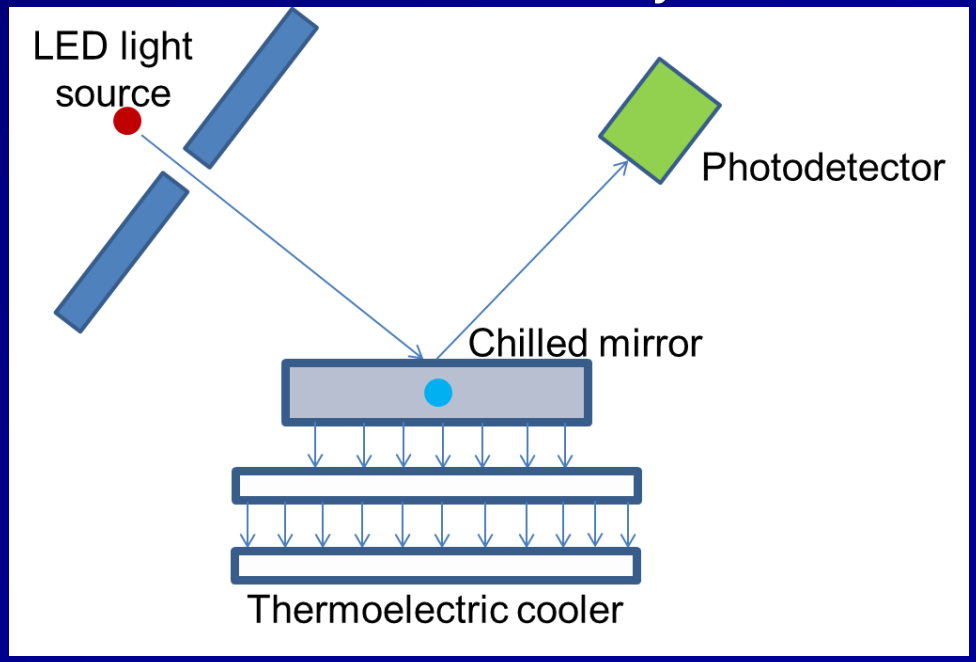

Humidity Monitoring Techniques: Maturity, Strengths, and Weaknesses

Features	Capacitance-Based		Chilled-Mirror Based	Electrical-Resistance Based	Leakage Monitoring
	Ceramic	Polymeric			
Maturity	Commercially available	Commercially available	Commercially available	Commercially available	Field deployed for nuclear
Strengths	Small size	Small size, wide temperature range, high precision, no hysteresis effects	High accuracy, expandable temperature range, long life, no hysteresis effects	Small size, wide temperature range, temperature range can be increased, no hysteresis effects	Small size of sensing lines, multi-location monitoring, deployed for nuclear
Weaknesses	May require frequent calibration, low precision, exhibits hysteresis effects	Low radiation resistance, frequent calibration due to radiation environment	Large size, requires large power, potential periodic cleaning of chilled mirror	Low precision, requires simultaneous measurement of temperature	Need for sizable monitoring station through which the sensing lines are routed

Potentially Suitable Chloride Concentration Monitoring Techniques

- One-time conductivity-based measurement devices
- Optical: Long-period grating
- Optical: Fluorescence
- Electrical: High electron mobility transistor
- Optical: Absorption spectroscopy

Reviewed in the paper

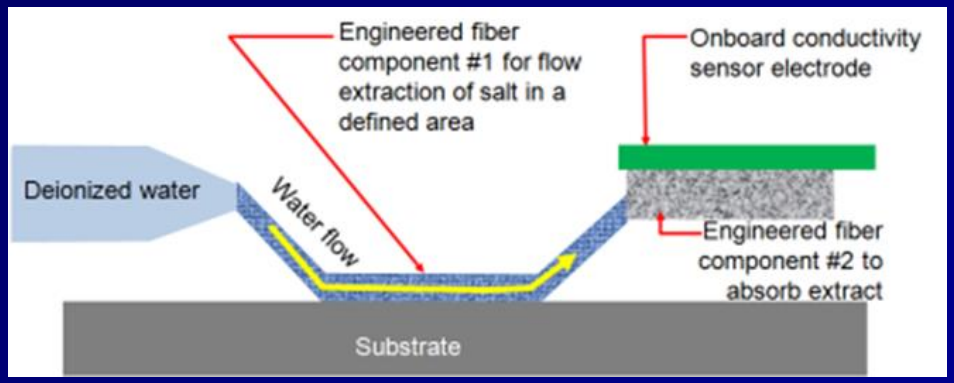

Schematics of Disposable Salt Strip of Conductivity-Based SaltSmart™ Meter

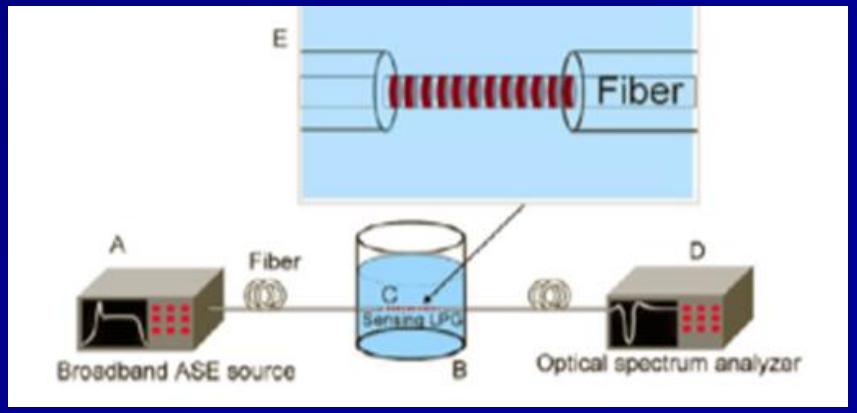

Long-Period, Grating-Based Optical Sensor

Chloride Concentration Monitoring Techniques: Maturity, Strengths, and Weaknesses

Features	Conductivity-Based SaltSmart™ Meter	Long-Period Grating-Based Optical Sensor	Fluorescence-Based Optical Sensor	High Electron Mobility Transistor-Based Sensor
Maturity	Field deployed, limited use in nuclear	Tested in laboratory	Tested in laboratory	Tested in laboratory
Strengths	Fast and automated method, no sealing to the substrate necessary allowing testing of curved or irregular surfaces	Simple fabrication; easy interrogation using fiber optics; potential for onsite, real-time, and remote sensing	Easy interrogation using fiber optics; potential for onsite, real-time, and remote sensing	Small sample volume; potential for onsite, real-time, and remote sensing
Weaknesses	One-time use. The highest working temperature is only 50 °C. Measures concentration determined from the conductivity of all dissolved species	Sensitive response to temperature changes; unknown thermal and radiation stability; possible interference by other ions and signal attenuation with increased fiber length	Other halide ions and oxygen may interfere; thermal and radiation stability is unknown	Temperature could affect measurement; thermal and radiation stability is unknown; possible signal attenuation with increased electrical cable length

Stress Corrosion Cracking Monitoring Techniques

- Intentionally did not focus on non-destructive examination (NDE) technologies used for SCC detection such as ultrasonic, non-linear elastic wave spectroscopy, acoustic emission, guided wave, and eddy current
- Non-NDE technologies identified:
  - Fiber optic sensors—Measure the elongation or contraction of the fiber when it is bonded to a structure
  - Crack growth sensor—Self-contained mechanical test system designed to measure crack length
  - Crack propagation sensor—Gauge designed to measure the progress (length) of a crack and its rate of growth in a metal specimen

Potentially Suitable Stress Corrosion Cracking Sensors

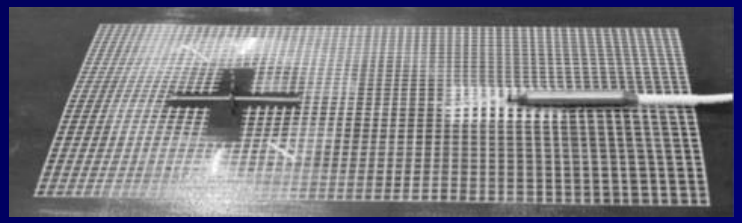

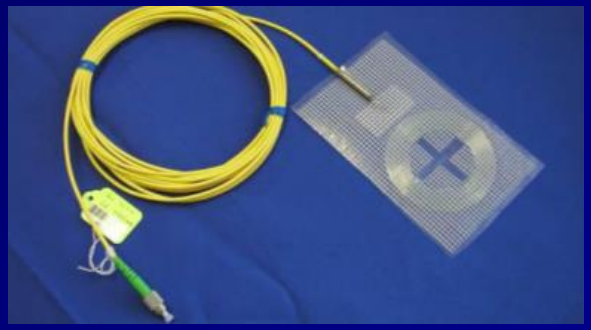

Fiber optic sensors typically used for field applications

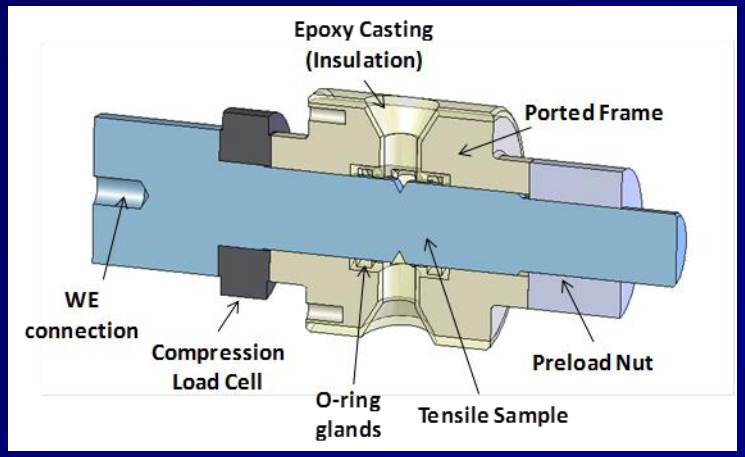

Load frame and stress corrosion cracking sensor assembly

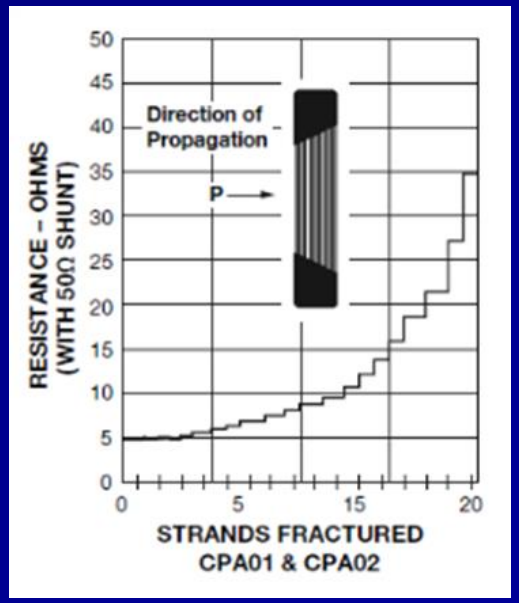

Crack propagation sensor

Stress Corrosion Cracking Sensors: Maturity, Strengths, and Weaknesses

Features	Fiber Optic Sensors	Crack Growth Sensor	Crack Propagation Sensor
Maturity	Field deployment started in 1980s	Field deployment started in 2009	Unknown
Strengths	Electromagnetic immunity, small size, high-temperature tolerance, corrosion resistance, large area monitoring with single sensor, light weight, long record of field testing	Highly sensitive, sensor does not need bonding to canister	Simple to implement, wide operational temperature, sensor does not need bonding to canister, small size
Weaknesses	Gamma radiation interference, sensor deployment may be problematic, temperature calibration required	Large size, surrogate sensor (does not measure cracking of actual component), temperature compensation required, local cracking monitoring, limited field testing	Modest crack propagation resolution, unknown field testing, local cracking monitoring

Summary

- Techniques to monitor temperature, humidity, chloride, and cracks were evaluated in terms of data collection mode, space requirements, power requirements, sensitivity, longevity, replacement difficulty, monitoring area, amount of data per measurement, maturity, temperature tolerance, radiation tolerance, strengths, and weaknesses
- Adaptation of existing technologies may be possible for temperature, humidity, and crack propagation monitoring. Much more advancement appears to be necessary for chloride monitoring
- To be used in DCSS, all methods would require testing and validation to assure that the sensors would not compromise DCSS functions
- Information may be used to support NRC assessments of possible industry evaluations on functional monitoring of DCSS

Disclaimer

This presentation describes work performed by the Center for Nuclear Waste Regulatory Analyses (CNWRA ®) and its contractors for the U.S. Nuclear Regulatory Commission (USNRC) under Contract No. NRC–HQ–12–C–02–0089. The activities reported here were performed on behalf of the USNRC Office of Nuclear Regulatory Research. This presentation is an independent product of the CNWRA and does not necessarily reflect the view or regulatory position of the USNRC. The USNRC staff views expressed herein are preliminary and do not constitute a final judgment or determination of the matters addressed or of the acceptability of any licensing action that may be under consideration at USNRC.