REVISION 7
JANUARY 1997

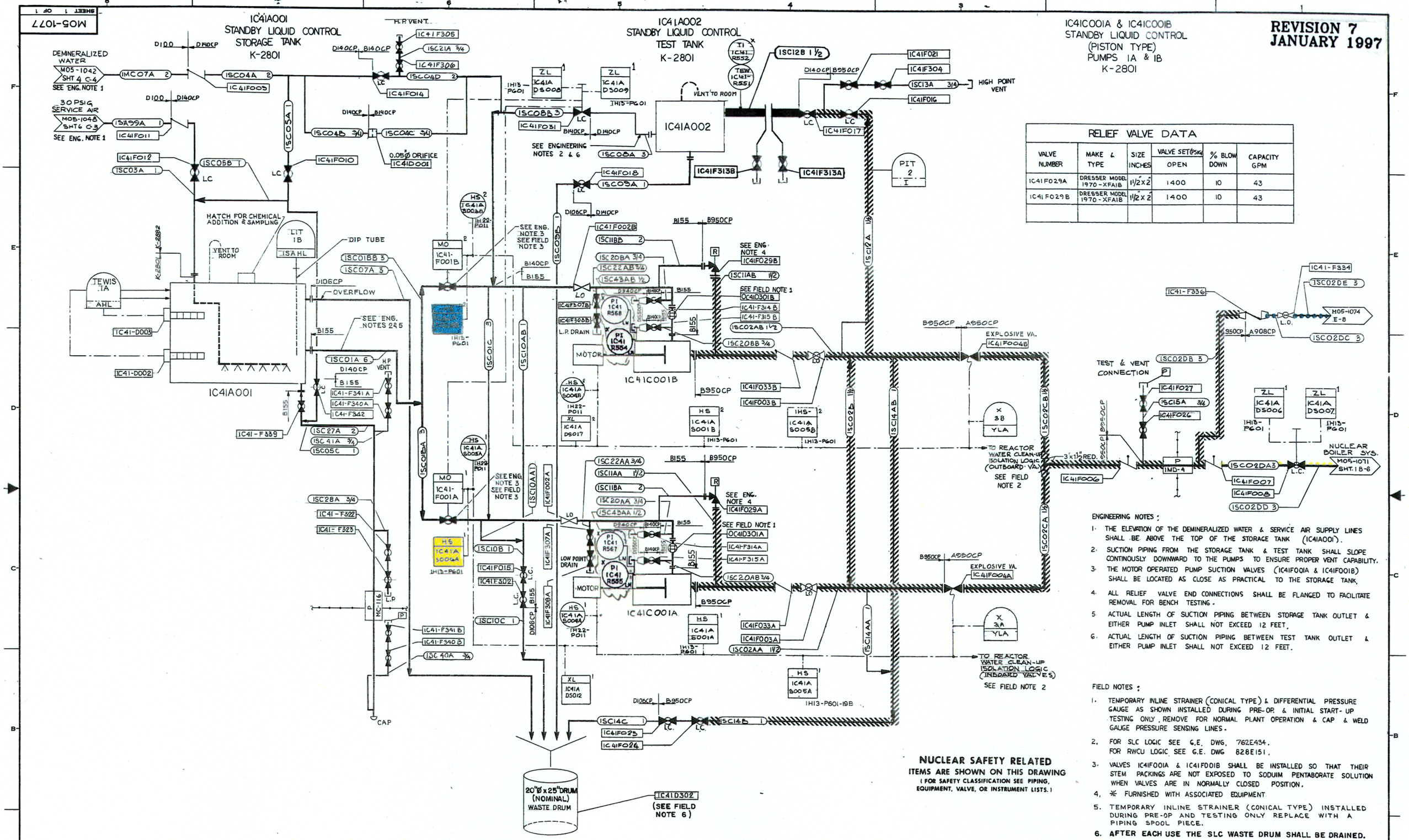

RELIEF VALVE DATA					
VALVE NUMBER	MAKE & TYPE	SIZE INCHES	VALVE SET (PSIG) OPEN	% BLOW DOWN	CAPACITY GPM
IC41F029A	DRESSER MODEL 1970-XFA1B	1½"x2"	1400	10	43
IC41F029B	DRESSER MODEL 1970-XFA1B	1½"x2"	1400	10	43

NUCLEAR SAFETY RELATED
ITEMS ARE SHOWN ON THIS DRAWING
(FOR SAFETY CLASSIFICATION SEE PIPING, EQUIPMENT, VALVE, OR INSTRUMENT LISTS.)

ENGINEERING NOTES:

1. THE ELEVATION OF THE DEMINERALIZED WATER & SERVICE AIR SUPPLY LINES SHALL BE ABOVE THE TOP OF THE STORAGE TANK (IC41A001).
2. SUCTION PIPING FROM THE STORAGE TANK & TEST TANK SHALL SLOPE CONTINOUSLY DOWNWARD TO THE PUMPS TO ENSURE PROPER VENT CAPABILITY.
3. THE MOTOR OPERATED PUMP SUCTION VALVES (IC41F001A & IC41F001B) SHALL BE LOCATED AS CLOSE AS PRACTICAL TO THE STORAGE TANK.
4. ALL RELIEF VALVE END CONNECTIONS SHALL BE FLANGED TO FACILITATE REMOVAL FOR BENCH TESTING.
5. ACTUAL LENGTH OF SUCTION PIPING BETWEEN STORAGE TANK OUTLET & EITHER PUMP INLET SHALL NOT EXCEED 12 FEET.
6. ACTUAL LENGTH OF SUCTION PIPING BETWEEN TEST TANK OUTLET & EITHER PUMP INLET SHALL NOT EXCEED 12 FEET.

FIELD NOTES:

1. TEMPORARY INLINE STRAINER (CONICAL TYPE) & DIFFERENTIAL PRESSURE GAUGE AS SHOWN INSTALLED DURING PRE-OP. & INITIAL START-UP TESTING ONLY. REMOVE FOR NORMAL PLANT OPERATION & CAP & WELD GAUGE PRESSURE SENSING LINES.
2. FOR SLC LOGIC SEE G.E. DWG. 762E434. FOR RWCU LOGIC SEE G.E. DWG 828E151.
3. VALVES IC41F001A & IC41F001B SHALL BE INSTALLED SO THAT THEIR STEM PACKINGS ARE NOT EXPOSED TO SODUIM PENTABORATE SOLUTION WHEN VALVES ARE IN NORMALLY CLOSED POSITION.
4. ✳ FURNISHED WITH ASSOCIATED EQUIPMENT.
5. TEMPORARY INLINE STRAINER (CONICAL TYPE) INSTALLED DURING PRE-OP AND TESTING ONLY REPLACE WITH A PIPING SPOOL PIECE.
6. **AFTER EACH USE THE SLC WASTE DRUM SHALL BE DRAINED.**

NOTE:
THE P&I D/C&I DIAGRAMS FOR THE C&I FUNCTION SYMBOLS ARE SHOWN ON DRAWING M10-9077 UNLESS OTHERWISE NOTED. SHEET NUMBER & DIAGRAM REFERENCE ARE SHOWN IN THE FUNCTION SYMBOL.

CLINTON POWER STATION
UPDATED SAFETY ANALYSIS REPORT

FIGURE 3.6-1
DIVISIONAL SEPARATION AND HIGH-ENERGY P&ID'S-
STANDBY LIQUID CONTROL
SHEET 70 OF 111

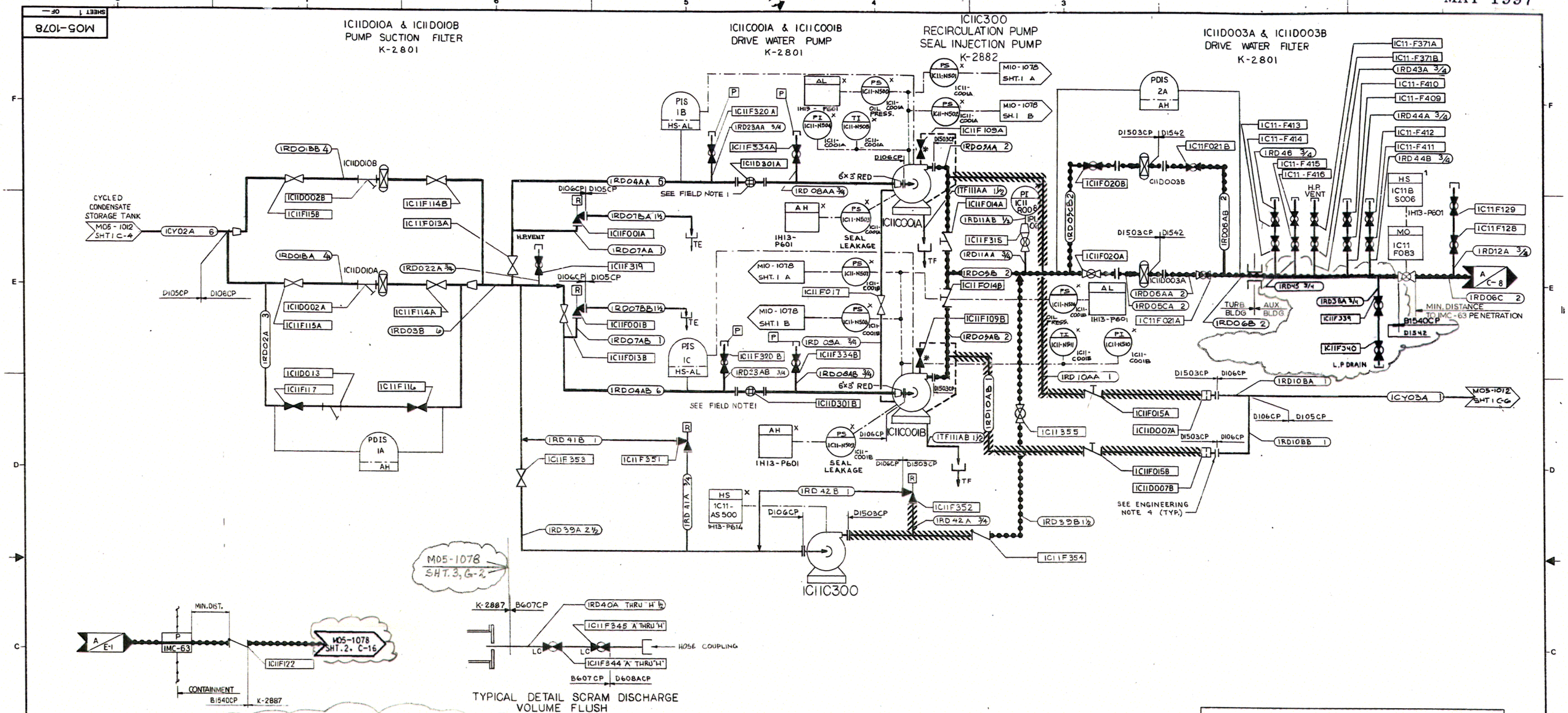

FIELD NOTES:

1. TEMPORARY IN-LINE STRAINER (CONICAL TYPE) AS SHOWN INSTALLED DURING PRE-OR AND INITIAL START-UP TESTING ONLY. REMOVE FOR NORMAL PLANT OPERATION.

ENGINEERING NOTES:

1. ALL PRESSURE RELIEF VALVES SHALL BE REMOVABLE FOR TESTING.
2. "MINIMAL DISTANCE" MEANS THAT THE PIPING DESIGNER SHOULD HOLD THE INDICATED DISTANCE TO BE AS MINIMAL AS PRACTICALLY POSSIBLE.
3. * MARKED ITEM IS FURNISHED WITH ASSOCIATED EQUIPMENT
4. USE MATCHING FLANGES IN ACCORDANCE WITH D1503CP.

RELIEF VALVE DATA

VALVE NUMBER	MAKE & TYPE	SIZE	VALVE SET PRESSURE	CAPACITY
1C11F001A	DRESSER-1-1970-2(3-1-1-2)-XFA30-NC3007	1"x1½"	150 PSIG	37 GPM
1C11F001B	DRESSER-1-1970-2(3-1-1-2)-XFA30-NC3007	1"x1½"	150 PSIG	37 GPM
1C11F025A	CROSBY-JR-WR-S	¾"x¾"	1250 PSIG	10 GPM
1C11F025B	CROSBY-JR-WR-S	¾"x¾"	1250 PSIG	10 GPM
1C11F351	DRESSER	¾"x1"	150 PSIG	10 GPM
1C11F352	DRESSER	¾"x1"	1790 PSIG	15 GPM

NUCLEAR SAFETY RELATED
ITEMS ARE SHOWN ON THIS DRAWING
(FOR SAFETY CLASSIFICATION SEE PIPING, EQUIPMENT, VALVE, OR INSTRUMENT LISTS.)

NOTE:
THE P&I D/C&I DIAGRAMS FOR THE C&I FUNCTION SYMBOLS ARE SHOWN ON DRAWING M10-1078 UNLESS OTHERWISE NOTED. SHEET NUMBER & DIAGRAM REFERENCE ARE SHOWN IN THE FUNCTION SYMBOL.

CLINTON POWER STATION
UPDATED SAFETY ANALYSIS REPORT

FIGURE 3.6-1
DIVISIONAL SEPARATION AND HIGH-ENERGY P&ID'S-CONTROL ROD DRIVES
SHEET 71 OF 111

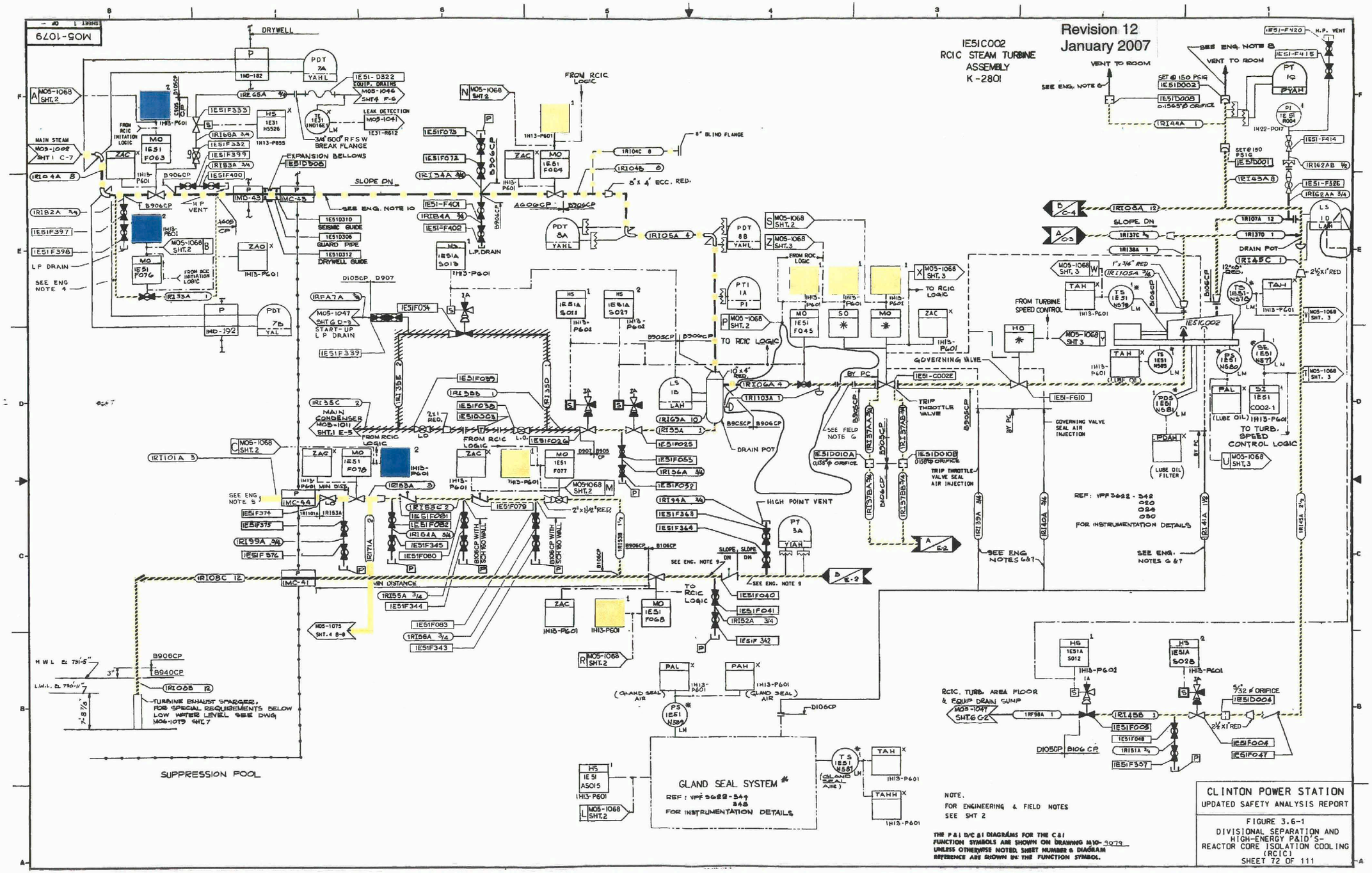

CLINTON POWER STATION
UPDATED SAFETY ANALYSIS REPORT

FIGURE 3.6-1
DIVISIONAL SEPARATION AND HIGH-ENERGY P&ID'S-
REACTOR CORE ISOLATION COOLING (RCIC)
SHEET 72 OF 111

REVISION 12
JANUARY 2007

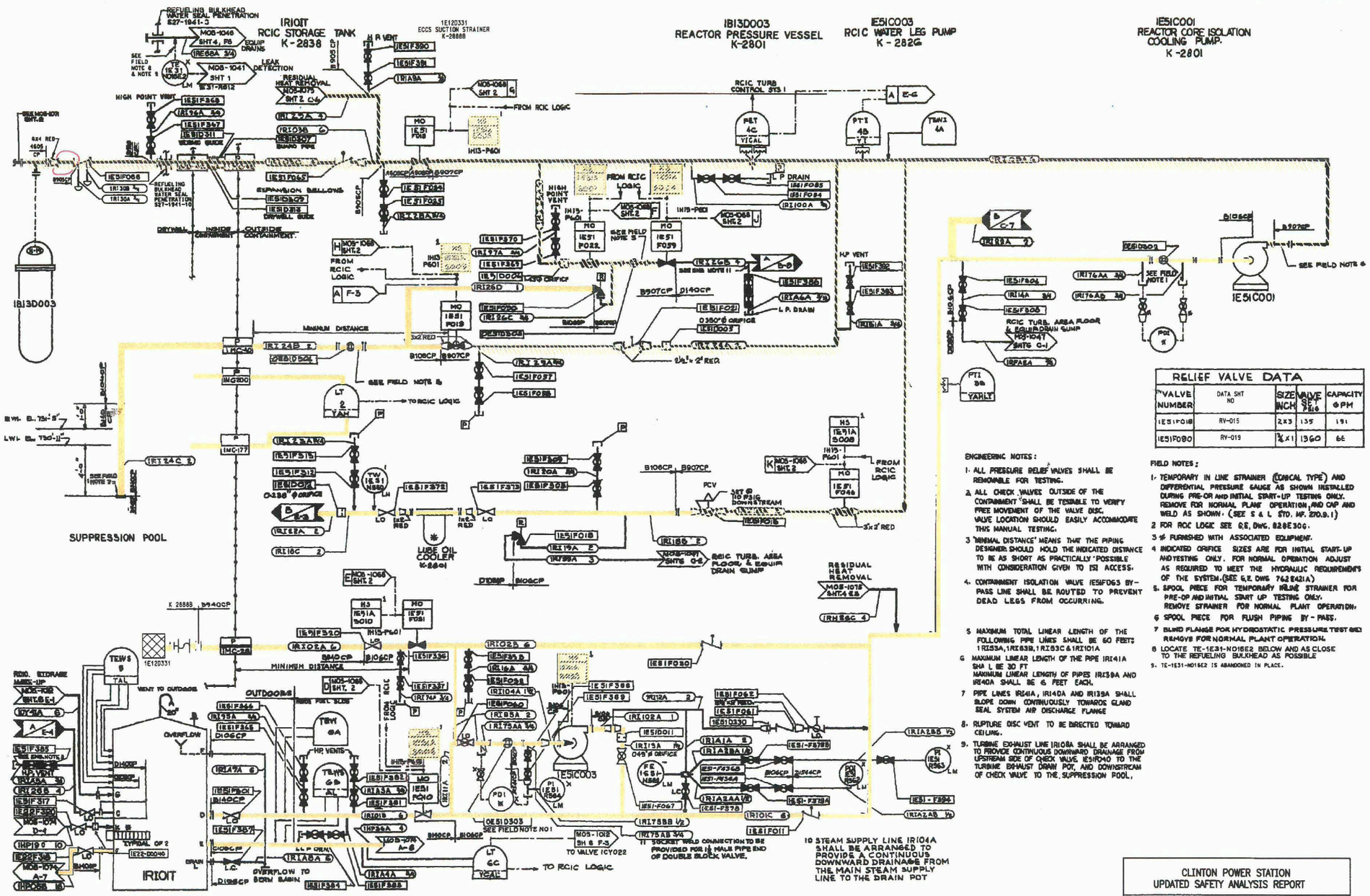

RELIEF VALVE DATA				
VALVE NUMBER	DATA SHT NO	SIZE INCH	VALVE SET PSIG	CAPACITY GPM
1E51F018	RV-015	2X3	135	191
1E51F080	RV-019	¾X1	1360	66

ENGINEERING NOTES:

1. ALL PRESSURE RELIEF VALVES SHALL BE REMOVABLE FOR TESTING.
2. ALL CHECK VALVES OUTSIDE OF THE CONTAINMENT SHALL BE TESTABLE TO VERIFY FREE MOVEMENT OF THE VALVE DISC. VALVE LOCATION SHOULD EASILY ACCOMMODATE THIS MANUAL TESTING.
3. 'MINIMAL DISTANCE' MEANS THAT THE PIPING DESIGNER SHOULD HOLD THE INDICATED DISTANCE TO BE AS SHORT AS PRACTICALLY POSSIBLE WITH CONSIDERATION GIVEN TO ISI ACCESS.
4. CONTAINMENT ISOLATION VALVE 1E51F063 BY-PASS LINE SHALL BE ROUTED TO PREVENT DEAD LEGS FROM OCCURRING.
5. MAXIMUM TOTAL LINEAR LENGTH OF THE FOLLOWING PIPE LINES SHALL BE 60 FEET: 1R133A, 1R133B, 1R133C & 1R1101A
6. MAXIMUM LINEAR LENGTH OF THE PIPE 1R141A SHALL BE 30 FT MAXIMUM LINEAR LENGTH OF PIPES 1R139A AND 1R140A SHALL BE 6 FEET EACH.
7. PIPE LINES 1R141A, 1R140A AND 1R139A SHALL SLOPE DOWN CONTINUOUSLY TOWARDS GLAND SEAL SYSTEM AIR DISCHARGE FLANGE
8. RUPTURE DISC VENT TO BE DIRECTED TOWARD CEILING.
9. TURBINE EXHAUST LINE 1R108A SHALL BE ARRANGED TO PROVIDE CONTINUOUS DOWNWARD DRAINAGE FROM UPSTREAM SIDE OF QUICK VALVE 1E51F040 TO THE TURBINE EXHAUST DRAIN POT, AND DOWNSTREAM OF CHECK VALVE TO THE SUPPRESSION POOL.
10. STEAM SUPPLY LINE 1R104A SHALL BE ARRANGED TO PROVIDE A CONTINUOUS DOWNWARD DRAINAGE FROM THE MAIN STEAM SUPPLY LINE TO THE DRAIN POT
11. SOCKET WELD CONNECTION TO BE PROVIDED FOR ½ MAIN PIPE END OF DOUBLE BLOCK VALVE.

FIELD NOTES:

1. TEMPORARY IN LINE STRAINER (CONICAL TYPE) AND DIFFERENTIAL PRESSURE GAUGE AS SHOWN INSTALLED DURING PRE-OP AND INITIAL START-UP TESTING ONLY. REMOVE FOR NORMAL PLANT OPERATION, AND CAP AND WELD AS SHOWN. (SEE S & L STD. MP. 270.9.1)
2. FOR RCIC LOGIC SEE G.E. DWG. 828E306.
3. # FURNISHED WITH ASSOCIATED EQUIPMENT.
4. INDICATED ORIFICE SIZES ARE FOR INITIAL START-UP AND TESTING ONLY. FOR NORMAL OPERATION ADJUST AS REQUIRED TO MEET THE HYDRAULIC REQUIREMENTS OF THE SYSTEM. (SEE G.E. DWG 762E421A)
5. SPOOL PIECE FOR TEMPORARY IN-LINE STRAINER FOR PRE-OP AND INITIAL START UP TESTING ONLY. REMOVE STRAINER FOR NORMAL PLANT OPERATION.
6. SPOOL PIECE FOR FLUSH PIPING BY-PASS.
7. BLIND FLANGE FOR HYDROSTATIC PRESSURE TEST ONLY REMOVE FOR NORMAL PLANT OPERATION.
8. LOCATE TE-1E31-N016E2 BELOW AND AS CLOSE TO THE REFUELING BULKHEAD AS POSSIBLE
9. TE-1E31-N016E2 IS ABANDONED IN PLACE.

CLINTON POWER STATION
UPDATED SAFETY ANALYSIS REPORT

FIGURE 3.6-1
DIVISIONAL SEPARATION AND
HIGH-ENERGY P&ID'S
REACTOR CORE ISOLATION COOLING
SHEET 73 OF 111

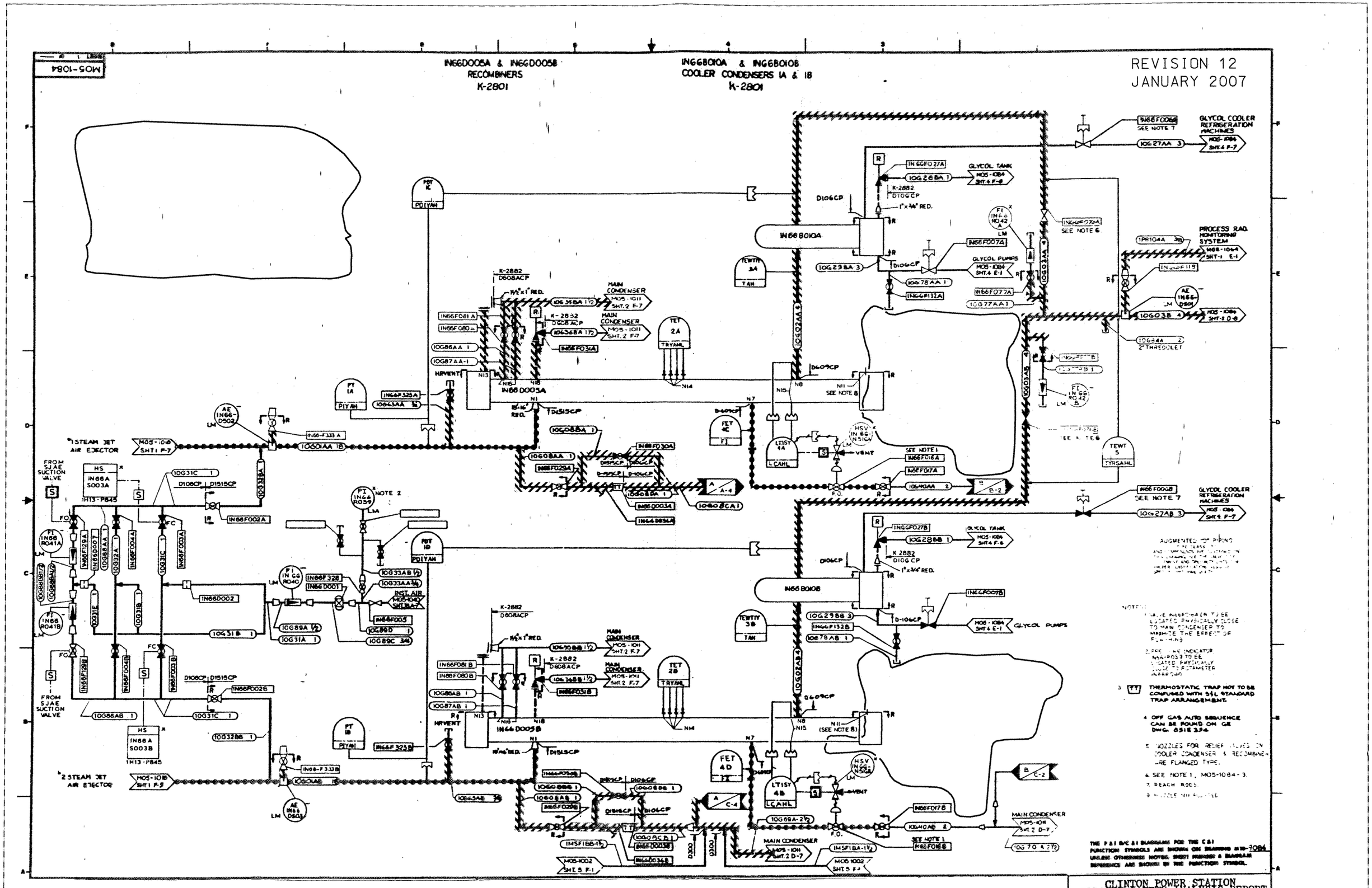

CLINTON POWER STATION
UPDATED SAFETY ANALYSIS REPORT

FIGURE 3.6-1
DIVISIONAL SEPARATION AND
HIGH-ENERGY P&ID'S-
OFF - GAS
SHEET 74 OF 111

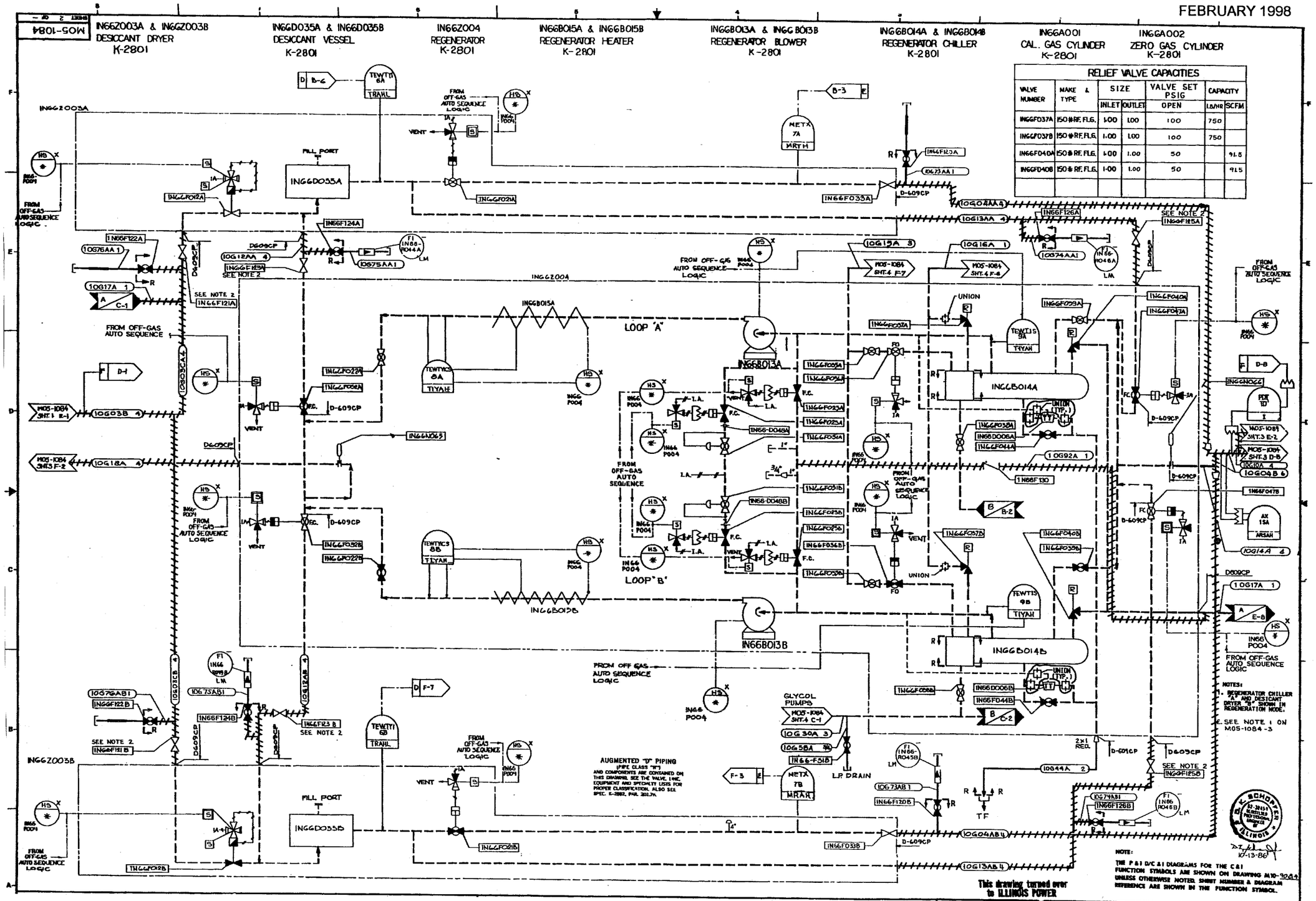

RELIEF VALVE CAPACITIES

VALVE NUMBER	MAKE & TYPE	SIZE INLET	SIZE OUTLET	VALVE SET PSIG OPEN	CAPACITY LB/HR	CAPACITY SCFM
IN66F037A	150# RF. FLG.	1.00	1.00	100	750	
IN66F037B	150# RF. FLG.	1.00	1.00	100	750	
IN66F040A	150# RF. FLG.	1.00	1.00	50		915
IN66F040B	150# RF. FLG.	1.00	1.00	50		915

CLINTON POWER STATION
UPDATED SAFETY ANALYSIS REPORT

FIGURE 3.6-1
DIVISIONAL SEPARATION AND
HIGH-ENERGY P&ID'S-
OFF - GAS
SHEET 75 OF 111

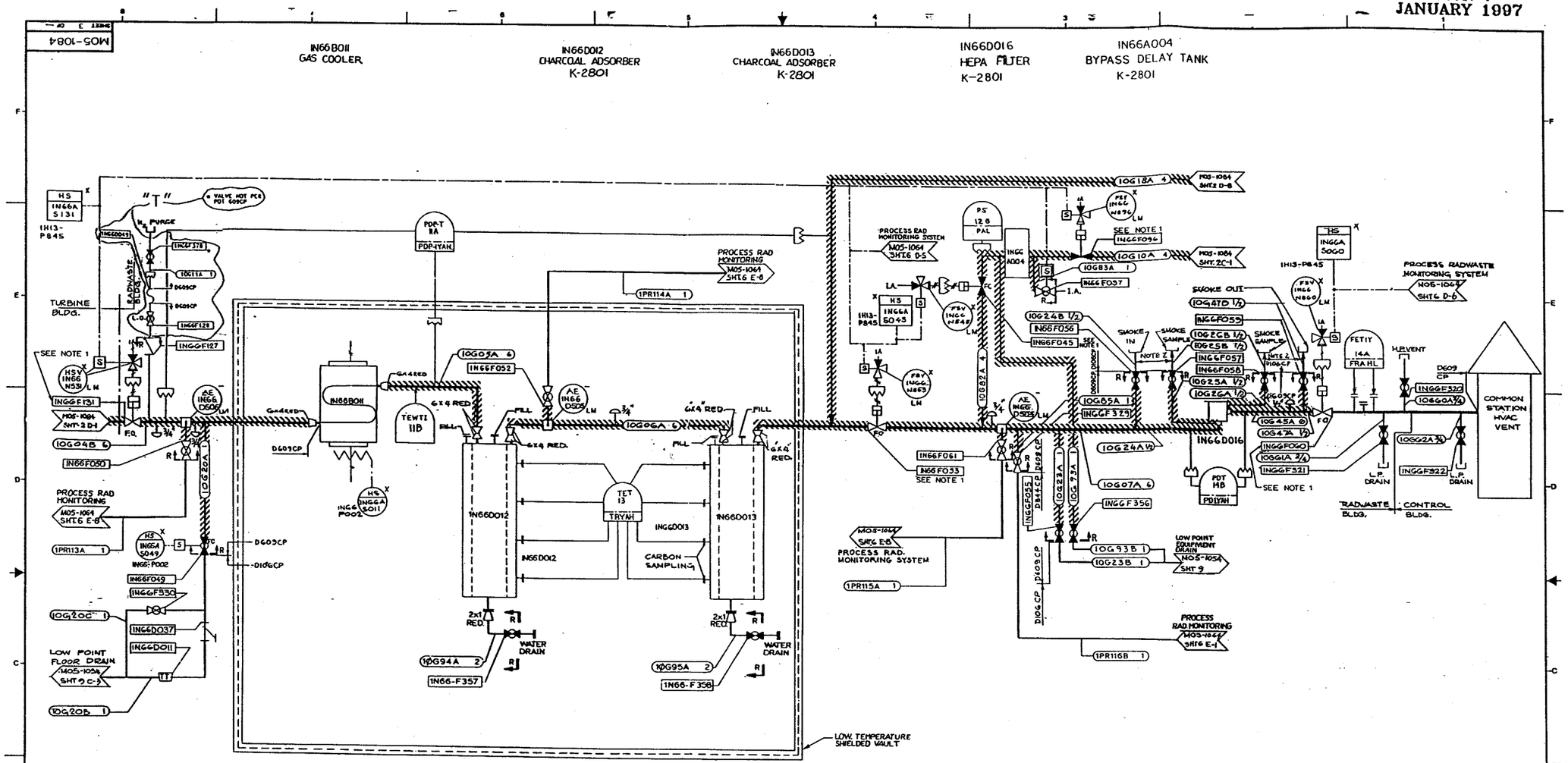

NOTE: 1 THE FOLLOWING OFF-GAS VALVES REQUIRE PRESSURIZATION, WITH INSTRUMENT AIR, OF THE DOUBLE PACKING LEAK-OFF CONNECTION:

TYPICAL PRESSURIZATION OF VALVE PACKING

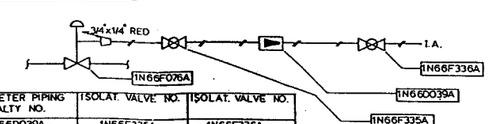

CONTROL VALVE NO.	ROTAMETER PIPING SPECIALTY NO.	ISOLAT. VALVE NO.	ISOLAT. VALVE NO.
1N66F076A	1N66D039A	1N66F335A	1N66F336A
1N66F076B	1N66D039B	1N66F335B	1N66F336B
1N66F121A	1N66D040A	1N66F337A	1N66F338A
1N66F121B	1N66D040B	1N66F337B	1N66F338B
1N66F123A	1N66D041A	1N66F339A	1N66F340A
1N66F123B	1N66D041B	1N66F339B	1N66F340B
1N66F125A	1N66D042A	1N66F341A	1N66F342A
1N66F125B	1N66D042B	1N66F341B	1N66F342B
1N66F045	1N66D043	1N66F343	1N66F344
1N66F096	1N66D044	1N66F345	1N66F346
1N66F131	1N66D045	1N66F347	1N66F348
1N66F053	1N66D046	1N66F349	1N66F350
1N66F060	1N66D047	1N66F351	1N66F352

NOTES CONT.

2. PROVIDE PROTECTIVE DUST COVER OR PLUGGED ML4-K26 HANSEN PLUG.

AUGMENTED "D" PIPING
(PIPE CLASS "K")
AND COMPONENTS ARE CONTAINED ON THIS DRAWING. SEE THE VALVE, LINE, EQUIPMENT AND SPECIALTY LISTS FOR PROPER CLASSIFICATION. ALSO SEE SPEC. K-3882, PAR. 301.7a.

NOTE:

THE P&I D/C & I DIAGRAMS FOR THE C&I FUNCTION SYMBOLS ARE SHOWN ON DRAWING M10-9084 UNLESS OTHERWISE NOTED. SHEET NUMBER & DIAGRAM REFERENCE ARE SHOWN IN THE FUNCTION SYMBOL.

CLINTON POWER STATION
UPDATED SAFETY ANALYSIS REPORT

FIGURE 3.6-1
DIVISIONAL SEPARATION AND HIGH-ENERGY P&ID'S-
OFF - GAS
SHEET 76 OF 111

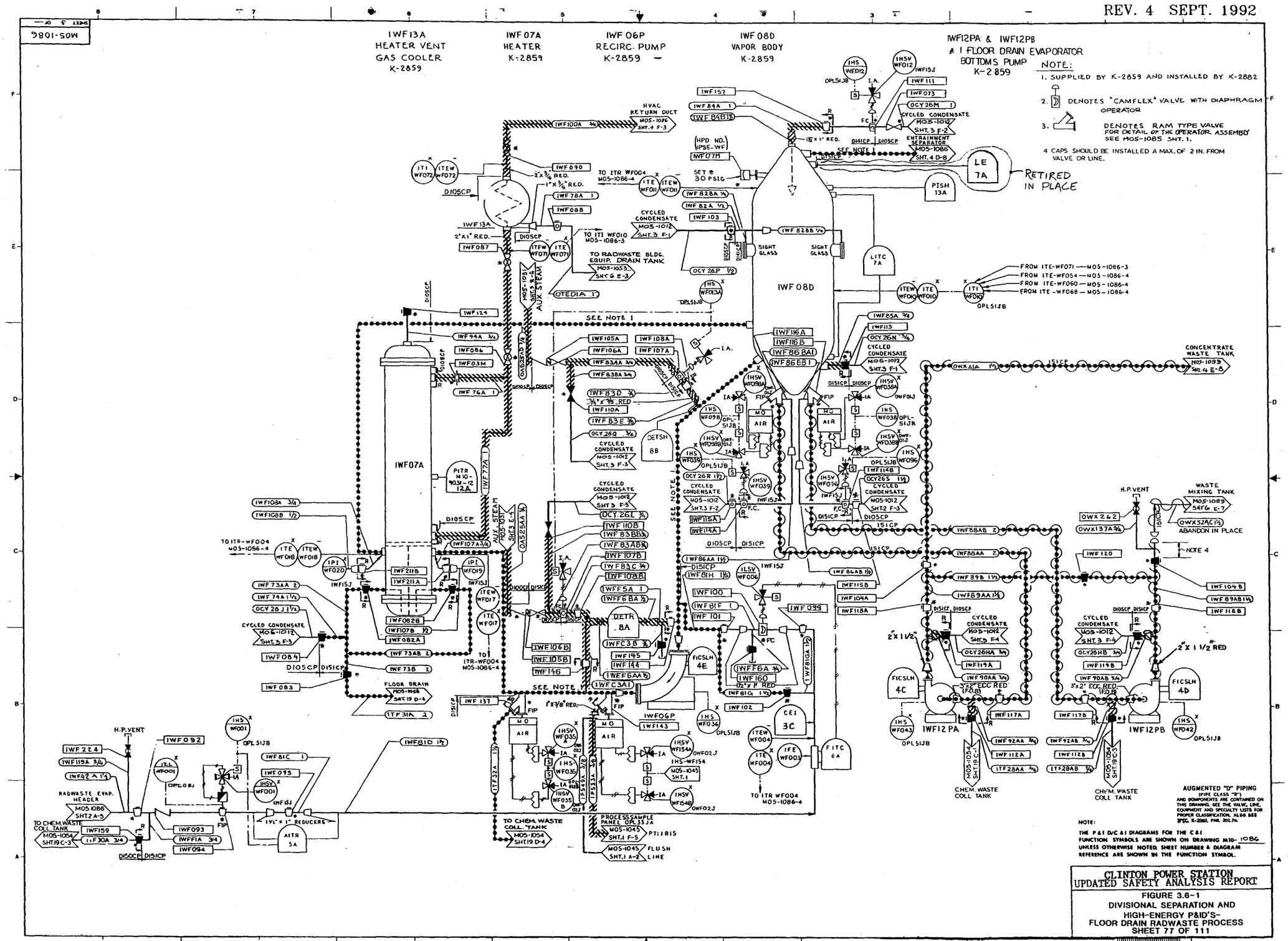

CLINTON POWER STATION
UPDATED SAFETY ANALYSIS REPORT

FIGURE 3.6-1
DIVISIONAL SEPARATION AND
HIGH-ENERGY P&ID'S-
FLOOR DRAIN RADWASTE PROCESS
SHEET 77 OF 111

REV. 2 SEPT. 1990

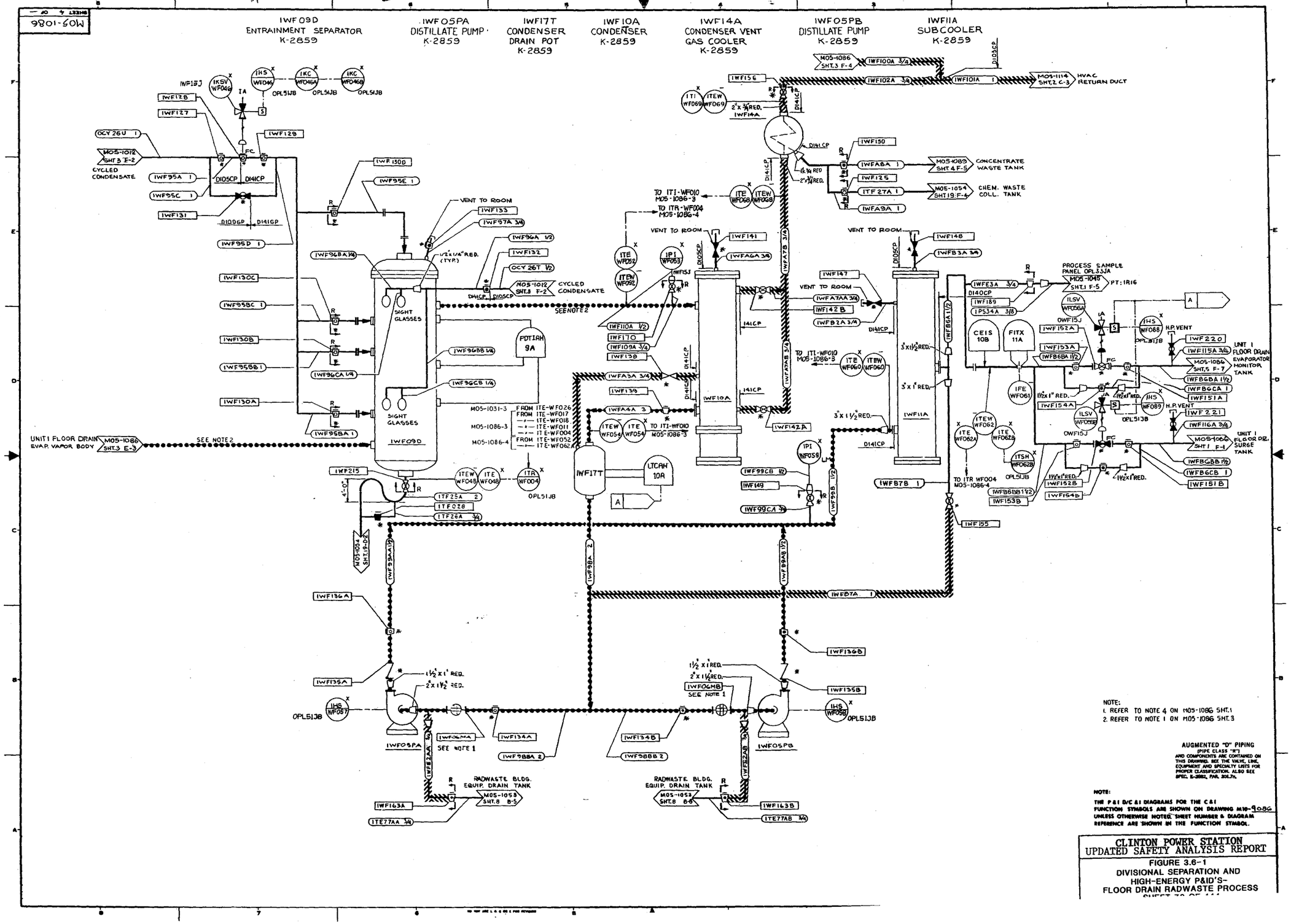

NOTE:
1. REFER TO NOTE 4 ON M05-1086 SHT.1
2. REFER TO NOTE 1 ON M05-1086 SHT.3

AUGMENTED "D" PIPING
(PIPE CLASS "R")
AND COMPONENTS ARE CONTAINED ON THIS DRAWING. SEE THE VALVE, LINE, EQUIPMENT AND SPECIALTY LISTS FOR PROPER CLASSIFICATION. ALSO SEE SPEC. K-2852, PAR. 301.7h.

NOTE:
THE P&I D/C &I DIAGRAMS FOR THE C&I FUNCTION SYMBOLS ARE SHOWN ON DRAWING M10-9086 UNLESS OTHERWISE NOTED. SHEET NUMBER & DIAGRAM REFERENCE ARE SHOWN IN THE FUNCTION SYMBOL.

CLINTON POWER STATION
UPDATED SAFETY ANALYSIS REPORT

FIGURE 3.6-1
DIVISIONAL SEPARATION AND HIGH-ENERGY P&ID'S-
FLOOR DRAIN RADWASTE PROCESS

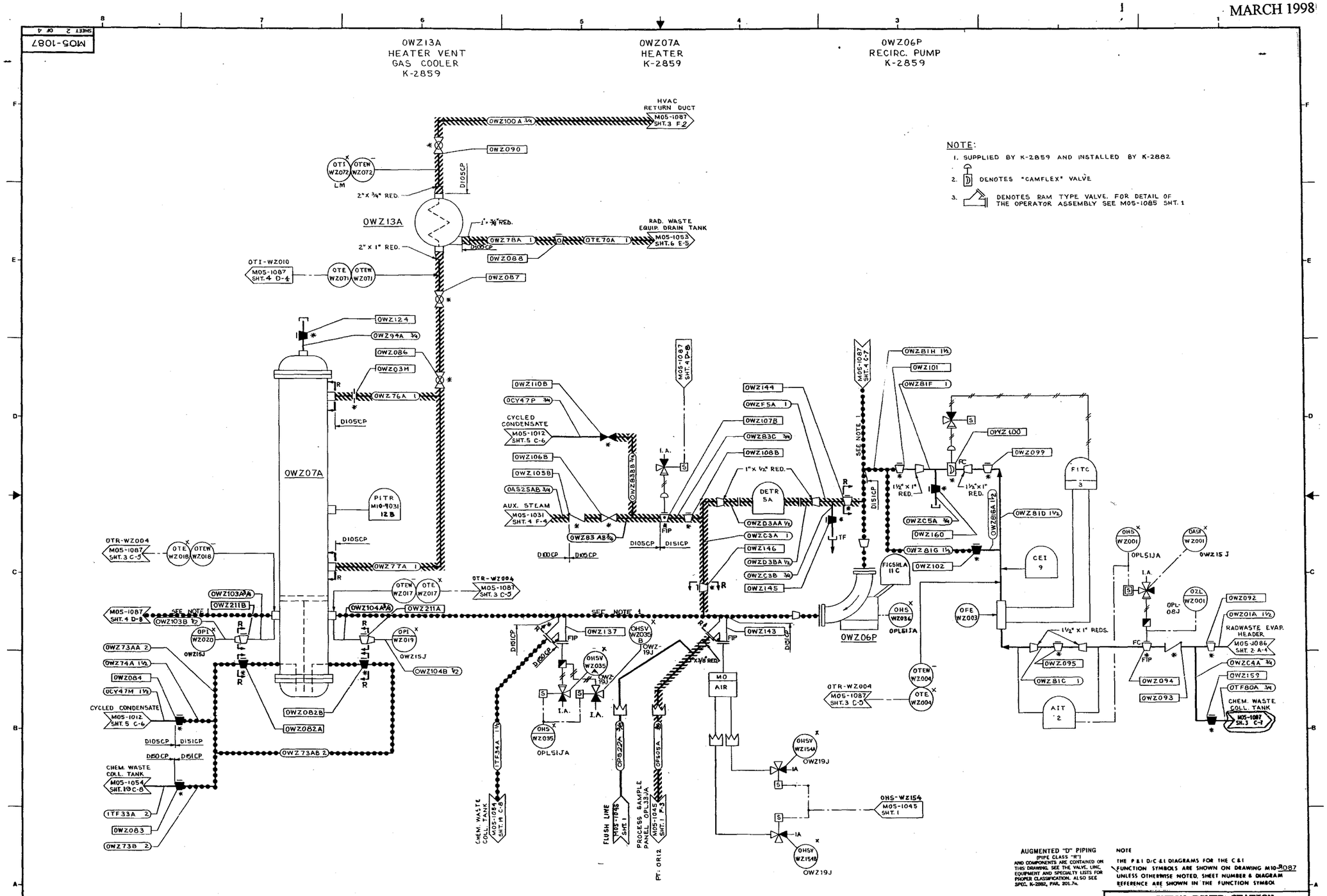

CLINTON POWER STATION
UPDATED SAFETY ANALYSIS REPORT

FIGURE 3.6-1
DIVISIONAL SEPARATION AND
HIGH-ENERGY P&ID'S-
CHEM. RAD. REPROCESSING & DISP. RAD. EVAP.
SHEET 79 OF 111

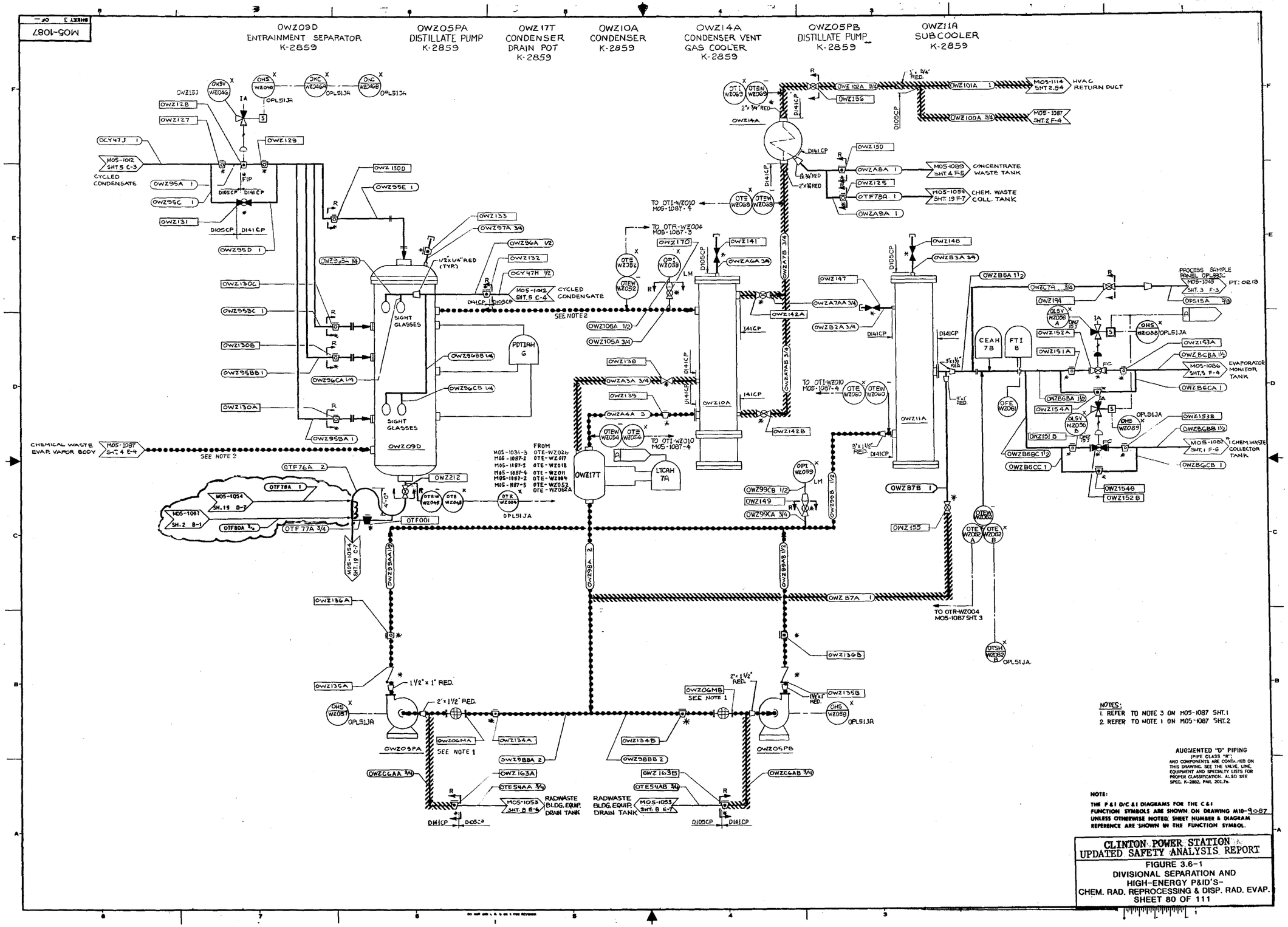
M05-1087
OWZ09D
ENTRAINMENT SEPARATOR
K-2859
OWZ05PA
DISTILLATE PUMP
K-2859
OWZ17T
CONDENSER
DRAIN POT
K-2859
OWZ10A
CONDENSER
K-2859
OWZ14A
CONDENSER VENT
GAS COOLER
K-2859
OWZ05PB
DISTILLATE PUMP
K-2859
OWZ11A
SUBCOOLER
K-2859
HVAC
RETURN DUCT
CONCENTRATE
WASTE TANK
CHEM. WASTE
COLL. TANK
CYCLED
CONDENSATE
SIGHT
GLASSES
SEE NOTE 2
CHEMICAL WASTE
EVAP. VAPOR BODY
PROCESS SAMPLE
PANEL OPL933L
EVAPORATOR
MONITOR
TANK
CHEM. WASTE
COLLECTOR
TANK
RADWASTE
BLDG. EQUIP.
DRAIN TANK
SEE NOTE 1
TO OTR-WZ004
M05-1087 SHT. 3
NOTES:
1. REFER TO NOTE 3 ON M05-1087 SHT. 1
2. REFER TO NOTE 1 ON M05-1087 SHT. 2
AUGMENTED "D" PIPING
(PIPE CLASS "R")
AND COMPONENTS ARE CONTAINED ON
THIS DRAWING. SEE THE VALVE, LINE,
EQUIPMENT AND SPECIALTY LISTS FOR
PROPER CLASSIFICATION. ALSO SEE
SPEC. K-2882, PAR. 201.7b.
NOTE:
THE P & I D/C & I DIAGRAMS FOR THE C & I
FUNCTION SYMBOLS ARE SHOWN ON DRAWING M10-9087
UNLESS OTHERWISE NOTED. SHEET NUMBER & DIAGRAM
REFERENCE ARE SHOWN IN THE FUNCTION SYMBOL.
CLINTON POWER STATION
UPDATED SAFETY ANALYSIS REPORT
FIGURE 3.6-1
DIVISIONAL SEPARATION AND
HIGH-ENERGY P&ID'S-
CHEM. RAD. REPROCESSING & DISP. RAD. EVAP.
SHEET 80 OF 111

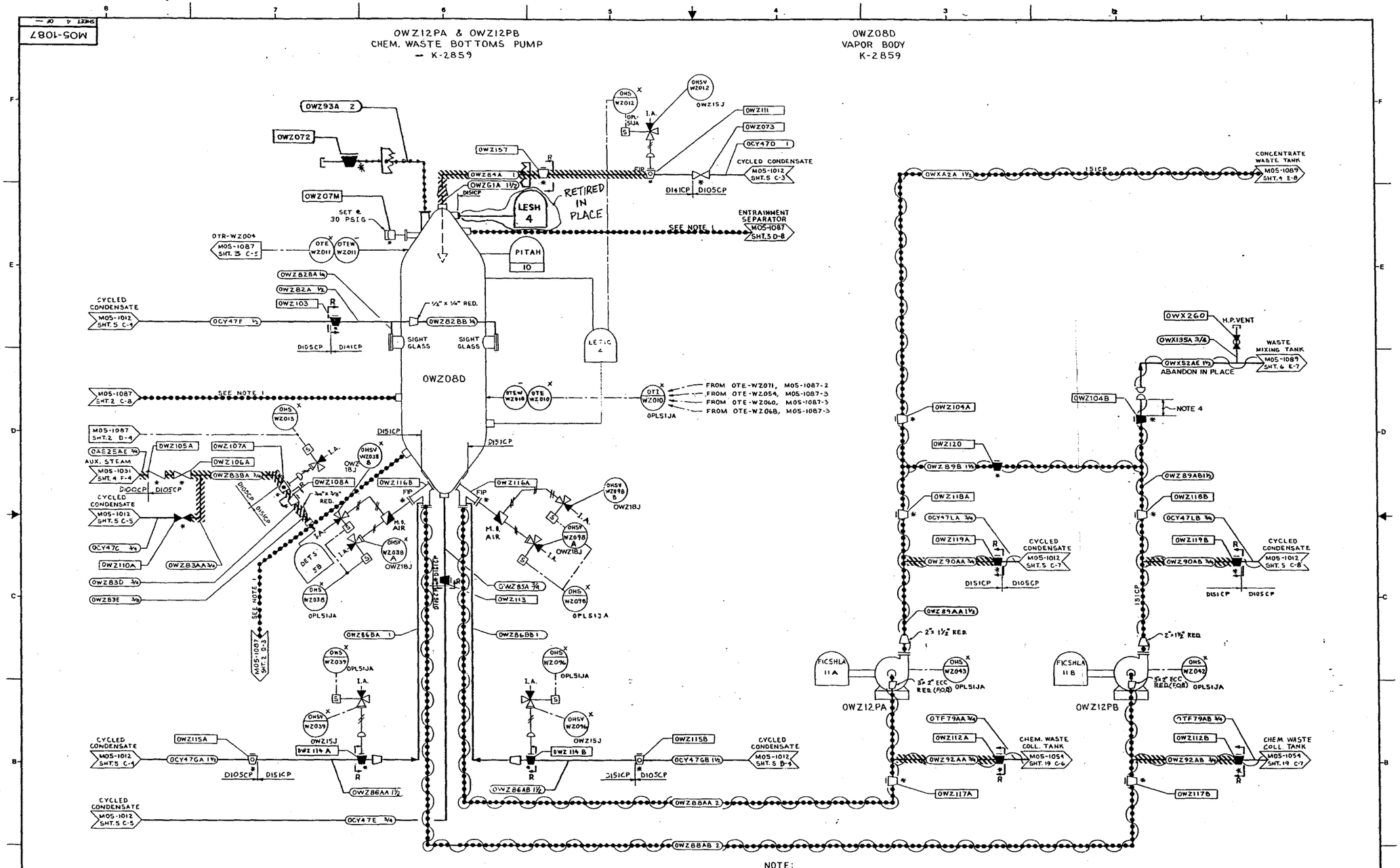

NOTE:

1. SUPPLIED BY K-2859 AND INSTALLED BY K-2882.
2. DENOTES "CAMFLEX" VALVE
3. DENOTES RAM TYPE VALVE. FOR DETAIL OF THE OPERATOR ASSEMBLY SEE M05-1085 SHT. 1
4. CAPS SHOULD BE INSTALLED A MAX. OF 2 IN. FROM VALVE OR LINE.

AUGMENTED "D" PIPING
(PIPE CLASS "R")
AND COMPONENTS ARE CONTAINED ON THIS DRAWING. SEE THE VALVE, LINE, EQUIPMENT AND SPECIALTY LISTS FOR PROPER CLASSIFICATION. ALSO SEE SPEC. K-2882, PAR. 201.7a.

NOTE
THE P & I D/C & I DIAGRAMS FOR THE C & I FUNCTION SYMBOLS ARE SHOWN ON DRAWING M10-4057 UNLESS OTHERWISE NOTED. SHEET NUMBER & DIAGRAM REFERENCE ARE SHOWN IN THE FUNCTION SYMBOL

CLINTON POWER STATION
UPDATED SAFETY ANALYSIS REPORT

FIGURE 3.6-1
DIVISIONAL SEPARATION AND
HIGH-ENERGY P&ID'S-
CHEM. RAD. REPROCESSING & DISP. RAD. EVAP.
SHEET 81 OF 111

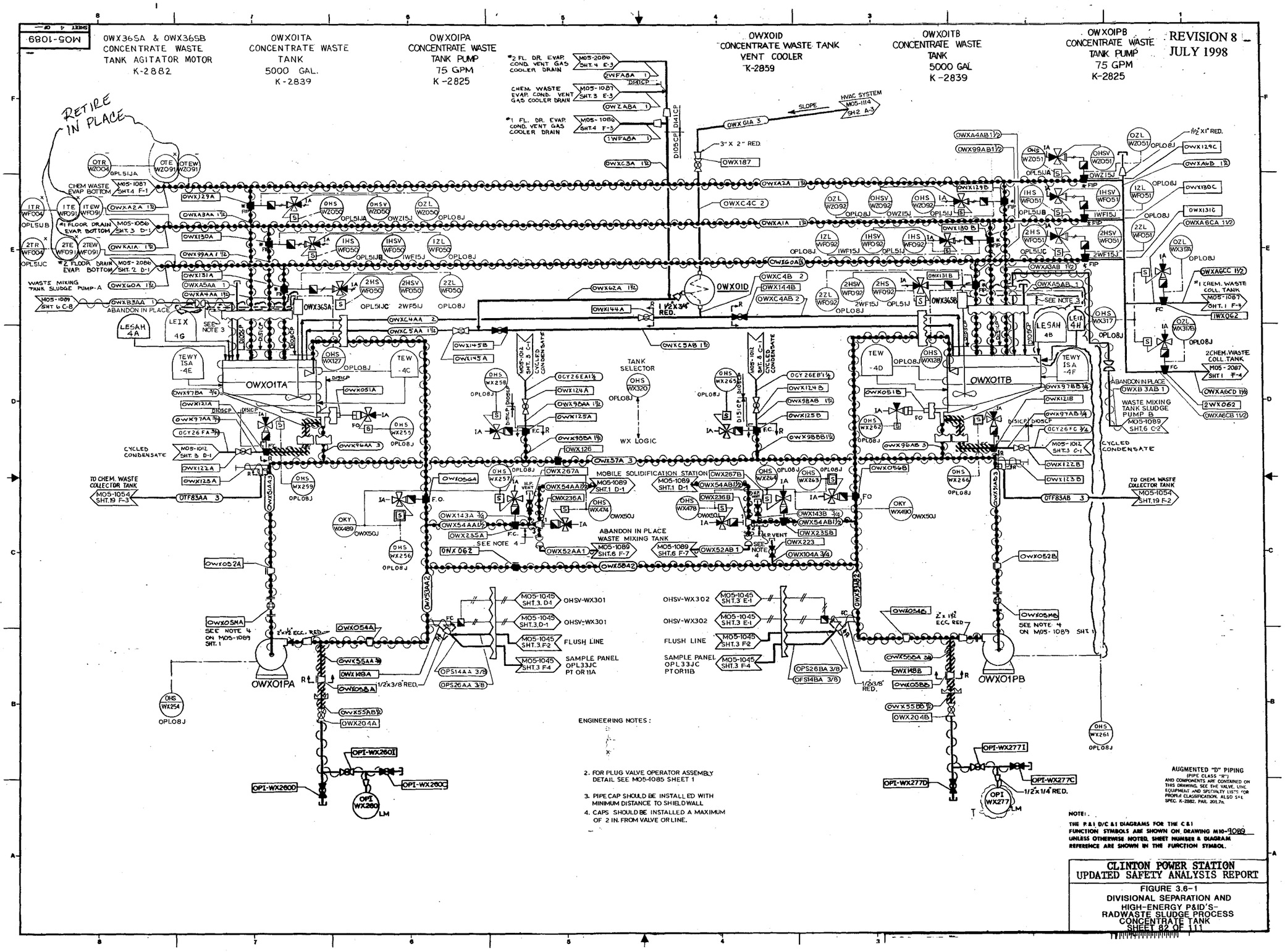
M05-1089
OWX365A & OWX365B CONCENTRATE WASTE TANK AGITATOR MOTOR K-2882
OWX01TA CONCENTRATE WASTE TANK 5000 GAL. K-2839
OWX01PA CONCENTRATE WASTE TANK PUMP 75 GPM K-2825
OWX01D CONCENTRATE WASTE TANK VENT COOLER K-2859
OWX01TB CONCENTRATE WASTE TANK 5000 GAL K-2839
OWX01PB CONCENTRATE WASTE TANK PUMP 75 GPM K-2825
REVISION 8
JULY 1998
RETIRE IN PLACE
TANK SELECTOR
WX LOGIC
MOBILE SOLIDIFICATION STATION
ABANDON IN PLACE
WASTE MIXING TANK SLUDGE PUMP-A
WASTE MIXING TANK SLUDGE PUMP B
CYCLED CONDENSATE
TO CHEM. WASTE COLLECTOR TANK
FLUSH LINE
SAMPLE PANEL
ENGINEERING NOTES:
2. FOR PLUG VALVE OPERATOR ASSEMBLY DETAIL SEE M05-1085 SHEET 1
3. PIPE CAP SHOULD BE INSTALLED WITH MINIMUM DISTANCE TO SHIELDWALL
4. CAPS SHOULD BE INSTALLED A MAXIMUM OF 2 IN. FROM VALVE OR LINE.
AUGMENTED "D" PIPING
NOTE:
THE P.&I. D/C &I DIAGRAMS FOR THE C&I FUNCTION SYMBOLS ARE SHOWN ON DRAWING M10-9089 UNLESS OTHERWISE NOTED. SHEET NUMBER & DIAGRAM REFERENCE ARE SHOWN IN THE FUNCTION SYMBOL.
CLINTON POWER STATION
UPDATED SAFETY ANALYSIS REPORT
FIGURE 3.6-1
DIVISIONAL SEPARATION AND HIGH-ENERGY P&ID'S-RADWASTE SLUDGE PROCESS CONCENTRATE TANK
SHEET 82 OF 111