AEOD TECHNICAL REVIEW REPORT *

UNIT: San Onofre 1
DOCKET NO.: 50-206
LICENSEE: Southern California Edison
NSSS/AE: Westinghouse/Bechtel

TR REPORT NO.: AEOD/T333
DATE: October 31, 1983
EVALUATOR/CONTACT: Harold Ornstein

SUBJECT: DEGRADATION OF SALT WATER COOLING SYSTEM - CAUSED BY A LOSS OF INSTRUMENT AIR

SUMMARY

On March 16, 1983 while performing construction work associated with a seismic upgrade of the salt water intake structure, a worker inadvertently drilled through an instrument air line leading to the salt water cooling (SWC) system. The loss of instrument air resulted in the loss of redundancy of the SWC system for about nine hours. Since the plant had been in cold shutdown for 13 months at the time of the event, the decay heat load was low and the plant could have sustained a complete loss of the SWC system for the nine hour duration without any damage.

Previously the plant had sustained three complete losses of the SWC system (References 1 and 2). In a previous case study (Reference 2), AEOD reported on those events, analyzed the effects of the loss of the SWC system, and noted methods of improving the reliability of the SWC system. Based upon recently obtained information, it is AEOD's understanding that the licensee has initiated work to modify the SWC system in accordance with one of Reference 2's suggestions (modifications to SWC pumps' discharge piping). The net result of the modifications will be that in the future, a loss of the instrument air system will not degrade the SWC system.

---

* This report supports ongoing AEOD and NRC activities and does not represent the position or requirements of the responsible NRC program office.

DISCUSSION

On March 16, 1983 while the plant was in an extended outage, a worker punctured the instrument air line to the (SWC) pumps' charge valves.* The worker had been drilling concrete for rebar installation when he inadvertently drilled into the instrument air line. The instrument air line was a field run line which was embedded in concrete, and its exact location was not indicated on the available drawings.

The SWC pumps' discharge valves are designed to fail in place upon loss of air (see Figure 1). Since the south SWC pump was operating, when the air was lost, the south SWC pump's discharge valve remained open and that train continued to function normally. The north SWC pump was off when the air was lost. Therefore its discharge valve remained closed upon the loss of air. There is a backup nitrogen accumulator on the south SWC pump discharge valve; however, the licensee was uncertain of the accumulator's capability of closing the valve had closure been required. (It was known that the discharge valve could be opened with accumulator nitrogen upon loss of instrument air; however, the licensee was not sure that the discharge valve could be closed under such conditions). As shown in Figure 1, in order to assure proper system operation and preclude backflow through the idle train the discharge valve on the idle SWC pump must be closed if the cross-tie valve is open or if the auxiliary SWC pump is in operation. Similarly, the auxiliary SWC pump had an air operated discharge valve without an accumulator; the loss of air rendered that valve inoperable. In essence, the loss of instrument air degraded the multi-train SWC system to a single train system.

---

*The plant had been in cold shutdown since February 1982 in order to perform seismic modifications. This event was reported by IE, Region V (PNO-V-83-14), the licensee was not required to issue an LER.

Upon losing the instrument air system, the licensee set up additional backup cooling systems and initiated actions to restore the instrument air. About nine hours after the event began, the instrument air was restored with a temporary line, and the north SWC pump and discharge valve were activated.

When the event occurred, the plant had been in cold shutdown for 13 months. Because of the low decay heat level, the plant could have sustained a total loss of the SWC system for the duration of the instrument air system outage without sustaining any damage.

FINDINGS

On June 14, 1983, AEOD learned (Reference 3) that the licensee is proceeding to modify the SWC system to allow manual operation of the discharge valves. The modifications which will be performed on the SWC system prior to plant restart in the summer of 1984 are:*

1. Install check valves in the SWC pump discharge lines.
2. Lock open the existing SWC pump discharge valves.
3. Provide nitrogen accumulators for all POV's in the system.

Similar modifications have already been made to the discharge lines from the auxiliary SWC pump. Some temporary modifications will be made earlier if the plant returns to power much earlier than summer 1984, i.e.,

> Temporarily install new air operators and solenoid valves on the discharge lines.

---

*The Licensee has hired Bechtel Corporation to procure and install this equipment.

It should be noted that these modifications would preclude degradation of the SWC system in the event of a future loss of instrument air.

CONCLUSIONS

In recent years San Onofre 1 has experienced three loss of SWC events. As a result of those events, AEOD's case study (Reference 2) and NRR's SEP program, the licensee has been reviewing the SWC system to improve its reliability. The March 16, 1983 loss of instrument air was a benign event; however, it focused additional attention on the vulnerability of the SWC system. As a result, the licensee is taking action similar to that which was suggested in AEOD's case study report to improve the system's reliability. Once the proposed modifications are in-place, any subsequent loss of instrument air will not result in degradation of the SWC System.

REFERENCES

1. Memorandum, C. Michelson (NRC) to H. Ray (SCE), "Case Study Report on San Onofre Unit 1 Loss of Salt Water Cooling Event of March 10, 1980," August 12, 1982.
2. AEOD Case Study, "San Onofre Unit 1 Loss of Salt Water Cooling Event on March 10, 1980," AEOD/C204, July 1982.
3. Telecon, G. Roche (SCE) to H. Ornstein (NRC), June 14, 1983.

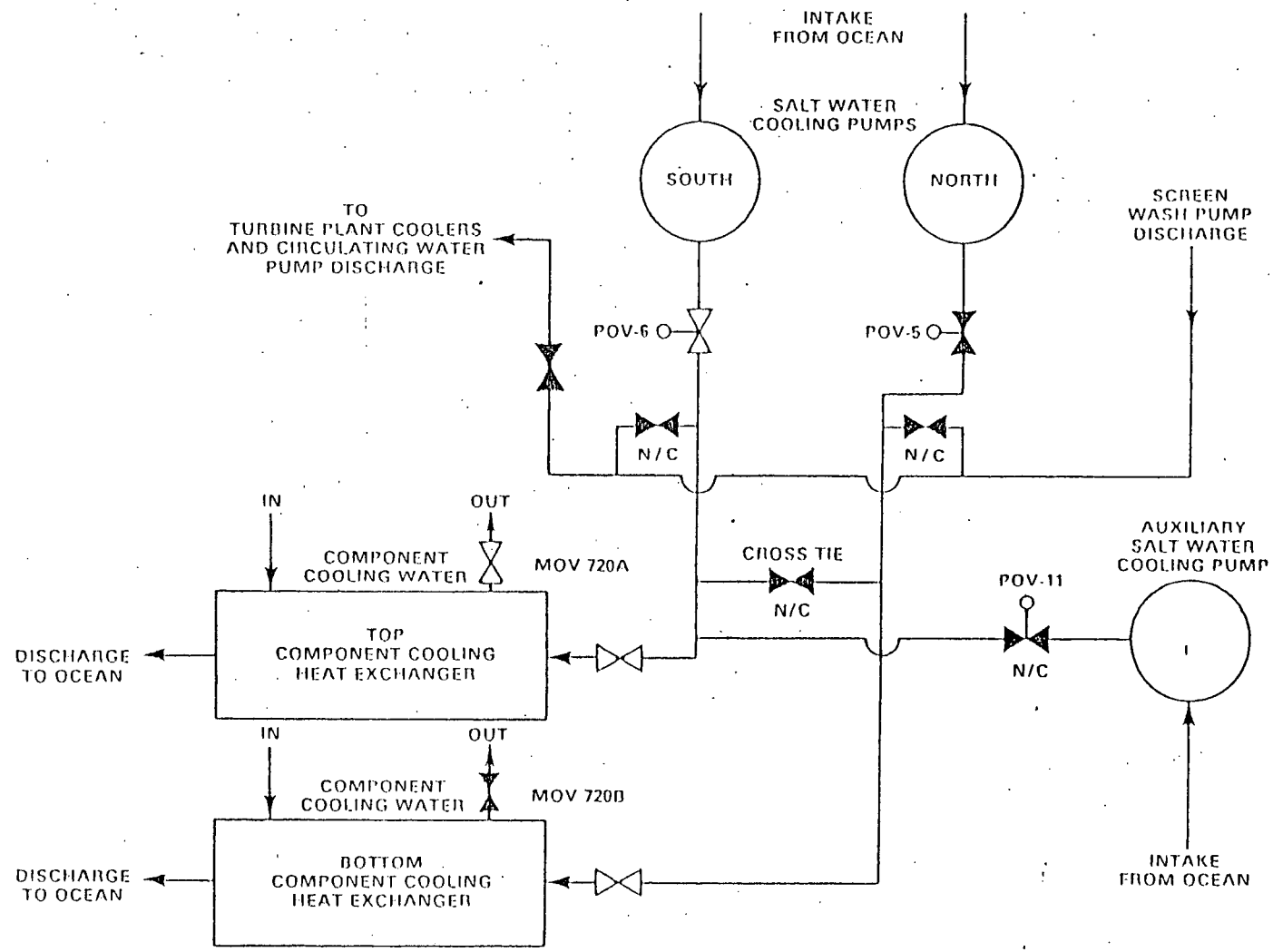

N/C = normally closed.

Figure 1 Salt water cooling system.