Southern California Edison Company

P. O. BOX 128

SAN CLEMENTE, CALIFORNIA 92672

H. E. MORGAN
VICE PRESIDENT AND SITE MANAGER
SAN ONOFRE

TELEPHONE
714-368-9470

June 14, 1990

U. S. Nuclear Regulatory Commission
Document Control Desk
Washington, D.C. 20555

Subject: Docket No. 50-206
30-Day Report
Licensee Event Report No. 90-011
San Onofre Nuclear Generating Station, Unit 1

Pursuant to 10 CFR 50.73(d), this submittal provides the required 30-day written Licensee Event Report (LER) for an occurrence involving a manual reactor trip. Neither the health and safety of plant personnel or the public was affected by this occurrence.

If you require any additional information, please so advise.

Sincerely,

HEMorgan

Enclosure: LER No. 90-011

cc: C. W. Caldwell (USNRC Senior Resident Inspector, Units 1, 2 and 3)

J. B. Martin (Regional Administrator, USNRC Region V)

Institute of Nuclear Power Operations (INPO)

IE22
1/1

LICENSEE EVENT REPORT (LER)

Facility Name (1)	Docket Number (2)	Page (3)
SAN ONOFRE NUCLEAR GENERATING STATION, UNIT 1	0 5 0 0 0 2 0 6	1 of 0 7

Title (4)
MANUAL REACTOR TRIP FOLLOWING A LOSS OF FEEDWATER TO ONE STEAM GENERATOR AS THE RESULT OF UNIDENTIFIED SYSTEM INTERACTIONS

EVENT DATE (5)			LER NUMBER (6)			REPORT DATE (7)			OTHER FACILITIES INVOLVED (8)	
Month	Day	Year	Year	Sequential Number	Revision Number	Month	Day	Year	Facility Names	Docket Number(s)
				---	---				NONE	0 5 0 0 0
0 5	1 5	9 0	9 0	0 1 1	0 0	0 6	1 4	9 0		0 5 0 0 0

OPERATING MODE (9): 1

POWER LEVEL (10): 0 9 2

THIS REPORT IS SUBMITTED PURSUANT TO THE REQUIREMENTS OF 10CFR (Check one or more of the following) (11)

___ 20.402(b)	___ 20.405(c)	X 50.73(a)(2)(iv)	___ 73.71(b)
___ 20.405(a)(1)(i)	___ 50.36(c)(1)	___ 50.73(a)(2)(v)	___ 73.71(c)
___ 20.405(a)(1)(ii)	___ 50.36(c)(2)	___ 50.73(a)(2)(vii)	___ Other (Specify in Abstract below and in text)
___ 20.405(a)(1)(iii)	___ 50.73(a)(2)(i)	___ 50.73(a)(2)(viii)(A)	
___ 20.405(a)(1)(iv)	___ 50.73(a)(2)(ii)	___ 50.73(a)(2)(viii)(B)	
___ 20.405(a)(1)(v)	___ 50.73(a)(2)(iii)	___ 50.73(a)(2)(x)	

LICENSEE CONTACT FOR THIS LER (12)

Name	TELEPHONE NUMBER (AREA CODE)
H. E. Morgan, Vice President and Site Manager	7 1 4 3 6 8 - 9 4 7 0

COMPLETE ONE LINE FOR EACH COMPONENT FAILURE DESCRIBED IN THIS REPORT (13)

CAUSE	SYSTEM	COMPONENT	MANUFACTURER	REPORTABLE TO NPRDS	CAUSE	SYSTEM	COMPONENT	MANUFACTURER	REPORTABLE TO NPRDS

SUPPLEMENTAL REPORT EXPECTED (14)

___ Yes (If yes, complete EXPECTED SUBMISSION DATE) XX NO

Expected Submission Date (15): Month | Day | Year

ABSTRACT (Limit to 1400 spaces, i.e., approximately fifteen single-space typewritten lines) (16)

On May 15, 1990, at 0243 with Unit 1 at 91.5% power, the reactor was manually tripped due to a low and decreasing level in Steam Generator (SG) C resulting from a loss of feedwater flow. The loss of feedwater flow occurred during maintenance on an Auxiliary Feedwater (AFW) pump while de-terminating a valve control circuit which resulted in an inadvertent short circuit to ground. The short circuit initiated automatic transfer of a vital bus and a momentary power interruption to the SG C high level actuation which, in turn, initiated closure of SG C main feedwater control valve (FCV). The high level actuation circuitry reset when it was re-energized at the completion of the transfer. The control room operator then reset the FCV controls in order to gain manual control of the FCV in accordance with procedures. However, the control operator was unable to re-establish feedwater flow before SG C reached the level at which procedures require the reactor to be tripped.

Closure of the FCV resulted from a relay/bistable race which occurred when the SG C high level FCV closure circuitry was re-energized. The potential for this interaction was not previously recognized. Corrective actions include: 1) temporarily disabling the SG high level closure of the FCV, 2) testing of the vital buses which are susceptible to brief power interruptions revealed no other unacceptable interactions, and 3) performance of a human performance enhancement system investigation into the cause of the short circuit is in progress.

Plant: San Onofre Nuclear Generating Station
Unit: One
Reactor Vendor: Westinghouse
Event Date: May 15, 1990
Time: 0243

A. CONDITIONS AT TIME OF THE EVENT:

Mode: 1, Power Operation
Reactor Power: 91.5%
RCS Temperature: 551 °F

B. BACKGROUND INFORMATION:

1. System Information:

There are three Narrow Range (NR) Steam Generator (SG) [SG] Level Instrumentation [LT] channels and three Wide Range (WR) channels (one WR channel is hot calibrated and the other two are cold calibrated) for each SG. One of the NR channels is utilized to provide, in part, a high level SG alarm and to automatically trip the associated main feedwater flow control [JB] valve ([FCV]) and the associated FCV bypass valve [FCV].

The Auxiliary Feedwater (AFW) System (AFWS) [BA] is designed to deliver feedwater to the Steam Generators (SG) [SG] during plant startup and shutdown operations following certain design basis events. The AFWS consists of an AFW Storage Tank [TK], two motor driven and one steam turbine driven AFW pumps [P], piping, and the valves and controls necessary to assure delivery of AFW to the SGs. The AFWS is divided into two independent and redundant trains for reliability. These trains are designated as A and B. Train A consists of motor-driven AFW pump G-10S and turbine-driven AFW pump G-10. Train B consists of motor-driven AFW pump G-10W. The steam supply for the G-10 AFW pump turbine drive includes a steam pressure regulator, stop valve and turbine warm-up valve (SV-2613).

Unit 1 is provided with maintained 120 VAC systems [EF] to provide reliable, redundant and, where necessary, regulated power for vital instrumentation and controls. In general, these systems consist of a 125 VDC battery [BTRY] (and chargers) which provide DC power to inverters [INV] which convert the 125 VDC power to 120 VAC. The 120 VAC power from the inverter is normally fed through an Automatic Transfer Switch (ATS) [83] which automatically transfers the vital bus loads to the backup 120 VAC source in the event of low voltage sensed at the inverter. Low voltage can result from conditions such as a fault on the bus or a failure of one of the two power sources. The ATSs for three of the vital buses are a relatively slow electro-mechanical break-before-make device which briefly (typically greater than 110 milli-seconds) de-energizes the supplied loads during a

transfer. The figure below is a simplified drawing of the power supply involved in this event.

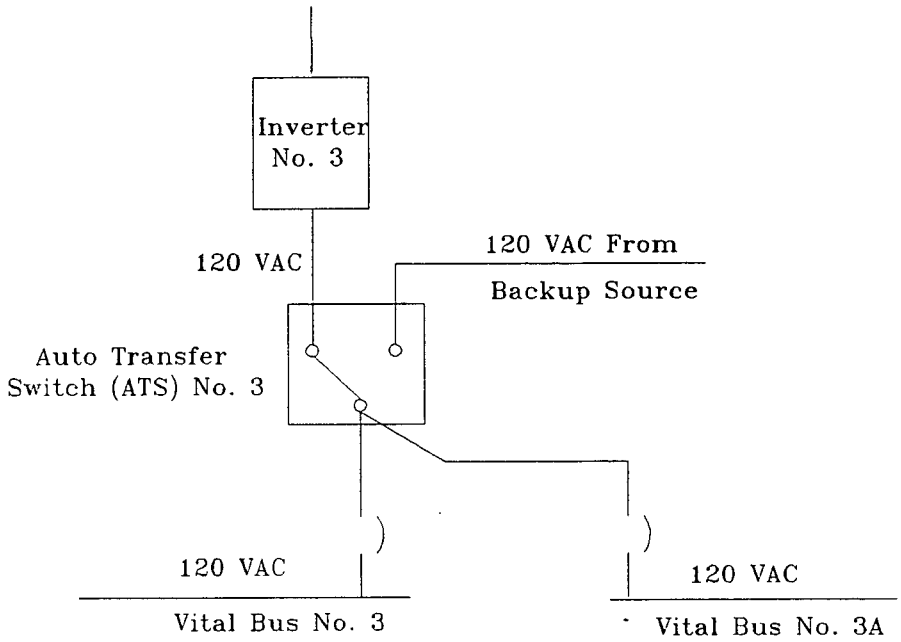

Figure - Power Supply for Vital Busses 3 and 3A

Vital Bus 3 provides power to various instrumentation and controls including the circuitry for the SG C high level trip of the FCVs. Vital Bus 3A provides power to other circuits including Train A of the AFW system.

2. Design Change:

Prior to Cycle X, a SG FCV was automatically closed when both: (1) a SG high level signal is provided by the associated SG's high level alarm bistable, and (2) a Safeguards Load Sequencing System (SLSS) actuates on safety injection. During the Cycle 10 refueling outage which began in November 1988, the automatic trip of a SG FCV was changed to provide protection from certain single failure scenarios. This change modified the control circuitry logic to close the SG FCV on either a SG high level or on safety injection. This design change also prevented reset and control of the SG FCVs until the SG high level condition had been cleared.

C. DESCRIPTION OF THE EVENT:

1. Event:

On May 15, 1990, at 0243 with Unit 1 at 91.5% power, the reactor was manually tripped due to a low and decreasing level in SG C resulting from a loss of feedwater flow. The loss of feedwater flow occurred during corrective maintenance on an AFW Train A pump G-10 valve control circuit which resulted in an inadvertent short circuit to ground. The short to ground caused a brief voltage reduction which caused ATS 3 to transfer the 120 VAC Vital Buses 3 and 3A from their normal inverter power source to their backup power source. The brief power interruption which occurred during the transfer resulted in a brief SG C high level actuation which initiated closure of SG C main feedwater regulating valve FCV-458 before the high level actuation circuitry reset when it was re-energized. In accordance with procedures, the control room operator (utility, licensed) then reset the FCV-458 controls in order to gain manual control of FCV-458. However, the control operator was unable to re-establish feedwater flow before SG C reached the level at which procedures require the reactor to be manually tripped.

2. Inoperable Structures, Systems or Components that Contributed to the Event:

None.

3. Sequence of Events on May 15, 1990:

TIME	ACTION
~0242	ATS 3 transfers from Inverter 3 to backup power source.
0243	Reactor is manually tripped.

4. Method of Discovery:

Control room operators heard an ATS operate and then observed many related alarms. The operators subsequently observed SG C level to be low and rapidly decreasing.

5. Personnel Actions and Analysis of Actions:

On discovering the low SG C level, the control room operating staff (in accordance with procedures and training) reset the SG C feedwater control valve trip and started to reopen the valve. However, the operators were unable to restore flow prior to the SG C level decreasing to the level at which a manual reactor trip is procedurally required.

6. Safety System Responses:

AFW Train B automatically actuated in accordance with design. The AFW actuation was initiated by low SG level in two-of-three SGs due to the loss of feedwater to SG C and level "shrink" in the other two SGs which occurs following a reactor trip. AFW channel A did not automatically actuate since the channel was in manual to preclude an automatic start of AFW pump G-10 to permit the maintenance which led to the above described short circuit to ground.

D. CAUSE OF THE EVENT:

1. Immediate Cause:

The ATS 3 transfer and the subsequent SG C main feedwater control valve closure was initiated by an inadvertent short to ground of a valve control cable for AFW pump G-10. The short to ground occurred while connecting a control cable in a valve conduit box while the circuit was energized. When the short circuit reduced the voltage on the vital bus below the auto-transfer set point, ATS 3 transferred 120 VAC buses 3 and 3A from their normal power source (Inverter 3) to their backup source.

A Human Performance Enhancement System (HPES) investigation of this event is being performed which focuses on the actions of personnel involved in the planning and approval of the maintenance activity which led up to the reactor trip. Our investigation to date has found that these actions were reasonable and in accordance with procedures.

2. Root Cause:

The ATS break-before-make transfer briefly de-energized the SG C high level FCV closure channel bistable and actuation relay. When vital buses 3 and 3A were re-energized on the backup power source, the SG C high level FCV closure actuation relay re-energized before the bistable trip condition cleared thus initiating closure of the FCV for SG C. The SG high level condition immediately cleared, but the seal-in design feature of the feedwater controls on SG high level blocked automatic re-opening of the SG C main feedwater control valve and the valve closed. With the FCV closed, the rate at which the SG level dropped was such that there was little time for operators to assume manual control and re-establish flow to the SG before procedures require manual action to trip the reactor.

Prior to Cycle X, Unit 1 had experienced ATS transfers which briefly de-energized the vital buses. However, the above mentioned relay/bistable race could not occur prior to the design change which was implemented during the Cycle X refueling outage (see Section B.2 above for details of this change). Although it was recognized that the electro-mechanical ATSs were break-before-make devices, the

potential for a relay/bistable race was subtle and not recognized during previous ATS transfers since: 1) undesired interactions had not been previously observed except for numerous annunciator alarms, and 2) there was no reason to believe that the duration of the power interruption during a transfer would be sufficient to cause such an interaction. Thus, consideration was not given to the potential for a relay/bistable race. Therefore, testing which was performed after implementation of the design change did not address a relay bistable race.

E. CORRECTIVE ACTIONS:

1. Corrective Actions Taken:

a. Two of the three ATSs were tested after this event. These tests revealed that transfer occurred in about 110 to 120 milli-seconds on power loss and about 200 to 230 milli-seconds for a simulated brief short circuit. A relay/bistable race occurred in all cases. The transfer time characteristics of the ATSs were found to be in accordance with their design; the observed variations were due to: 1) the condition of the individual ATS, 2) the phase relationship of the inverter and the backup power source at the time of transfer, and 3) most significantly the voltage at the time of the transfer. The tests also demonstrated that with the high SG level closure of the FCVs disabled, no other unacceptable interactions were identified. The remaining ATS had been tested with the reactor at power with no adverse interaction.

b. The susceptibility of the plant to a loss of feedwater due to a high SG level actuation signal has been temporarily disabled since it is not credited in any design basis event.

2. Planned Corrective Actions:

a. SCE is reviewing the design of the SG high level trip of feedwater control valves and their power supplies in order to determine corrective actions which would close the SG FCVs on a high SG level and which will not be susceptible to spurious actuation. It is anticipated that these corrective actions will be identified and a schedule for implementation developed by December 1990.

b. As discussed in Section D.1, a HPES investigation of the events which led up to the short circuit is continuing. Any appropriate corrective actions resulting from this investigation will be implemented.

F. SAFETY SIGNIFICANCE OF THE EVENT:

This event was of no safety significance since all components operated in conformance with the design and the unit remained within the bounds of all applicable analyses.

G. ADDITIONAL INFORMATION:

1. Component Failure Information:

Not applicable.

2. Previous LERs for Similar Events:

LER 90-19 (Docket Number 50-206) reported a similar manual reactor trip due to a loss of feedwater to SG A. This trip resulted from a failure to communicate design change information from the design organization to appropriate station organization. Due to the difference in the causes for the two events, the corrective actions described in LER 90-19 could not have prevented the event being reported in this LER.

3. Results of NPRDS Search:

Not applicable.