SOUTHERN CALIFORNIA EDISON COMPANY
SAN ONOFRE NUCLEAR GENERATING STATION
UNIT 1
INSERVICE INSPECTION SUMMARY REPORT
INTERVAL 2; PERIOD 3; OUTAGE 1
REFUELING CYCLE 11

CONTENTS

FORM NIS-1 OWNER'S DATA REPORT FOR INSERVICE INSPECTION

As required by the Provisions of the ASME Code Rules

1. Owner: Southern California Edison (SCE)
2244 Walnut Grove
Rosemead, CA 92770

San Diego Gas & Electric
101 Ash Street
San Diego, California

2. Plant: San Onofre Nuclear Generator Stations (SONGS)
Baseline Road, San Clemente, CA 92674-0128

3. Unit: One

4. Owner Certificate of Authorization: N/A

5. Commercial Service Date: January 1, 1968

6. National Board Number for Unit: N/A

7. Components Inspected:

COMPONENT OR APPURTENANCE	MANUFACTURER OR INSTALLER	MANUFACTURER OR INSTALLER SERIAL NO.	STATE NO.	NATIONAL BOARD NO.
REACTOR VESSEL	COMBUSTION ENGINEERING	CE-61102	23153-70	14921
CLOSURE HEAD	COMBUSTION ENGINEERING	CE-61201	23153-70	14921
RCP "C"	WESTINGHOUSE	3-U149	23153-70	N/A
PRESSURIZER	WESTINGHOUSE	16 A 4850-1	23153-70	608

Note: Supplemental sheets in form of lists, sketches, or drawings may be used provided: (1) Size is 8½ in. x 11 in., (2) Information in items 1 through 6 on this data report is included on each sheet, and (3) each sheet is numbered and the number of sheets is recorded at the top of this form.

8. Examination Dates: May 25, 1989 to March 23, 1991

9. Inspection Interval: January 1, 1978 to November 30, 1991

10. Abstract of Examinations:

The scope of the Inservice Inspection during the Unit 1 Cycle 11 Refueling Outage consisted of components within the Reactor Coolant System, augmented ISI examinations of postulated break points in the Main Steam System and Steam Generator Tubing as described in Section B and C of the Inservice Inspection Report. Approximately 75% of the required examinations have been completed for the second interval.

11. Abstract of Conditions Noted:

Recordable indications noted during this Inspection as described in Section C & Section D were evaluated and consider to be minor in nature.

12. Abstract of Corrective Measures Recommended and Taken:

Rounded indication found during liquid penetrant testing were found acceptable. Visual indication found on the Irradiation Specimen Basket and Thermal Shield Core Barrel Support Blocks and Flexures were documented as nonconformities and repaired.

We Certify that the statements made in this report are correct and the examinations and corrective actions taken conform to the rules of ASME Code, Section XI.

Date: 6/20/ *1991 Signed: SCE (Owner) by* [signature]

Certificate of Authorization No. (if applicable): N/A Expiration Date: N/A

CERTIFICATE OF INSPECTION

I, the undersigned holding a valid commission issued by the National Board of Boiler and Pressure Vessel Inspectors and the State or Province of *California*, employed by *Arkwright Mutual Insurance Company (Factory Mutual System)* of *Norwood, Massachusetts* have inspected the components described in this Owners' Data Report during the period from *May 25, 1989* to *March 23, 1991* and state that to the best of my knowledge and belief, the Owner has performed examinations and taken corrective action described in this Owners' Data Report in accordance with Section XI of the ASME Code.

By signing this certificate, neither the Inspector nor his employer makes any warranty, expressed or implied, concerning the examinations or corrective measures described in this Owners' Data Report. Furthermore, neither the Inspector nor his employer shall be liable in any manner for any personal injury or property damage or a loss of any kind arising from or connected with this inspection.

Date: June 20, 1991

[signature]
(Inspector's Signature)

Commission: *California 1862*
(National Board, State)

Southern California Edison Company
San Onofre Nuclear Generating Station
Unit 1
Inservice Inspection Summary Report
Interval 2; Period 3; Outage 1
Refueling Cycle 11

INTRODUCTION

Inservice Nondestructive Examinations were performed on the San Onofre Nuclear Generating Station, Unit 1, Class 1 and Class 2 systems and components from July 1990 through August 1990.

The Inservice Inspection Summary Report is submitted in accordance with the American Society of Mechanical Engineers Boiler and Pressure Vessel Code, Section XI, Article IWA 6000, Paragraph IWA-6220, 1974 Edition/Summer 1975 Addenda, and the Unit 1 Technical Specifications.

The Inservice Examination Program included nondestructive visual, surface and volumetric examination methods conducted in accordance with the requirements of the American Society of Mechanical Engineers Boiler and Pressure Vessel Code, Section XI, "Rules for Inservice Inspection of Nuclear Power Plant Components", 1974 Edition, with Addenda through Summer 1975 and the Unit 1 Technical Specifications.

These nondestructive examinations were performed in accordance with procedures which were reviewed and approved by qualified plant personnel prior to their implementation.

RESULTS

The results of each examination has been recorded on the examination data sheets which are included in this report. The recording conventions were in accordance with the examination procedures applicable to the items and examination methods.

Information resulting from repairs or indication removal as well as any additional examinations and/or tests along with the appropriate code references are documented and maintained as part of the permanent plant Quality Assurance records file.

Recordable indications and their disposition are tabulated in Section E of this report.

A summary of recordable indications are given below:

Class 1 :

A. Volumetric Examination:

1. One indication was recorded in the Reactor Vessel base material outside of the examination boundary.

B. Surface Examinations:

1. Four indications were recorded on the Loop B inlet and outlet safe end welds.

C. Visual Examinations:

1. Visual examinations as required by Code category B-N-1 and B-N-3, Code item No. B 1.15 and B 1.17 were performed on visually accessible surfaces as identified per Unit 1 Reactor General Assembly Drawing 647J266 which is an owner controlled document located in CDM.

2. Confirmation was made of the indications which had been previously identified and are being repaired as a function of the Thermal Shield/Core Barrel repairs during the Cycle 11 outage.

AUGMENTED ISI - HIGH ENERGY LINES

Four welds were examined on the Main Steam safety and reliefs East and West header. No recordable indications were found in the welds on High Energy Lines.

LIMITATIONS

Due to the plant having been designed and fabricated prior to the establishment of the Section XI access and examination requirements, portions of piping or component examinations are limited by geometric configuration, adjacent structures or other access considerations. As a result of this situation during the Cycle 11 outage, the examination limitations and allowances in A.S.M.E. Code Case N-460 dated July 27, 1988, were exercised.

EXAMINATIONS

Automated and manual nondestructive examinations were conducted on an examination zone as required by the ASME Code and ASME Code Case N-460 dated July 27, 1988, due to the limitations imposed by the geometric, physical, and material conditions. When an examination zone was not completely accessible, the limiting condition was noted on the examination data sheet.

Reflectors detected by ultrasonic examination and identified as a geometric anomaly, were noted on the Examination Data Sheet as (NRI) or "Non-Reportable Indications".

UNIT 1 CYCLE 11

AUTHORIZED NUCLEAR INSERVICE INSPECTORS

SAN ONOFRE NUCLEAR GENERATING STATION

J. L. Westphall

M. N. Contractor

D. J. Manning

Z. C. Cordero

C. D. Thompson

E. J. Varrett

H. D. Haston

Arkwright Mutual Insurance Company

Factory Mutual System

1158 Boston - Providence Turnpike

Norwood. MA. 02062

REACTOR COOLANT SYSTEM
REACTOR VESSEL

INDEX: 1.1.1
SKETCH/ISO: 1-1100

ITEM	NDE PROCESS	DATE	CODE CATEGORY	REMARKS
1C	AUT	8/4/90	B-B/B1.2	
2C	AUT	8/9/90	B-A/B1.1	
3C	AUT	8/5/90	B-A/B1.1	
4C	AUT	8/5/90	B-A/B1.1	
5C	AUT	8/2/90	B-C/B1.3	(AUT FROM FLANGE FACE)
5C	AUT	8/8/90	B-C/B1.3	(AUT FROM ID OF RV)
1L	AUT	8/4/90	B-B/B1.2	
2L	AUT	8/4/90	B-B/B1.2	
3L	AUT	8/4/90	B-B/B1.2	
4L	AUT	8/4/90	B-B/B1.2	
5L	AUT	8/4/90	B-B/B1.2	
6L	AUT	8/4/90	B-B/B1.2	
7L	AUT	8/6/90	B-A/B1.1	
8L	AUT	8/6/90	B-A/B1.1	
9L	AUT	8/6/90	B-A/B1.1	
10L	AUT	8/7/90	B-A/B1.1	INDICATION OUTSIDE OF EXAMINATION AREA (SEE ACCEPTANCE EVALUATION)
11L	AUT	8/7/90	B-A/B1.1	
12L	AUT	8/7/90	B-A/B1.1	
13L	AUT	8/7/90	B-A/B1.1	
14L	AUT	8/7/90	B-A/B1.1	
15L	AUT	8/7/90	B-A/B1.1	

REACTOR COOLANT SYSTEM
REACTOR VESSEL

INDEX: 1.1.1
SKETCH/ISO: 1-1100 & 1-1400

ITEM	NDE PROCESS	DATE	CODE CATEGORY	REMARKS
1N	AUT	8/13/90	B-D/B1.4	LOOP B OUTLET NOZZLE TO VESSEL
1N	AUT	8/13/90	B-D/B1.4	LOOP B OUTLET INTEGRAL EXTENSION
B-1	AUT	*******	B-F/B1.6	LOOP B OUTLET NOZZLE TO SAFE END (NOT EXAMINED DUE TO PREVIOUS ACCEPTABLE 2nd INTERVAL EXAM)
B-2	AUT	*******	B-F/B4.1	LOOP B OUTLET SAFE END TO PIPE (NOT EXAMINED DUE TO PREVIOUS ACCEPTABLE 2nd INTERVAL EXAM)
2N	AUT	8/9/90	B-D/B1.4	LOOP B INLET NOZZLE TO VESSEL
2N	AUT	8/14/90	B-D/B1.4	LOOP B INLET NOZZLE INNER RADIUS
B-18	AUT	8/15/90	B-F/B1.6	LOOP B INLET NOZZLE TO SAFE END
B-17	AUT	8/15/90	B-F/B4.1	LOOP B INLET SAFE END TO PIPE
3N	AUT	8/14/90	B-D/B1.4	LOOP C OUTLET NOZZLE TO VESSEL
3N	AUT	8/14/90	B-D/B1.4	LOOP C OUTLET NOZZLE INTEGRAL EXTENSION
C-1	AUT	8/15/90	B-F/B1.6	LOOP C OUTLET NOZZLE TO SAFE END
C-2	AUT	8/15/90	B-F/B4.1	LOOP C OUTLET SAFE END TO PIPE

REACTOR COOLANT SYSTEM
REACTOR VESSEL

INDEX: 1.1.1
SKETCH/ISO: 1-1400 & 1-1100

ITEM	NDE PROCESS	DATE	CODE CATEGORY	REMARKS
4N	AUT	8/14/90	B-D/B1.4	LOOP C INLET NOZZLE TO VESSEL
4N	AUT	8/15/90	B-D/B1.4	LOOP C INLET NOZZLE INNER RADIUS
C-18	AUT	8/15/90	B-F/B1.6	LOOP C INLET NOZZLE TO SAFE END
C-17	AUT	8/15/90	B-F/B4.1	LOOP C INLET SAFE END TO PIPE
5N	AUT	8/12/90	B-D/B1.4	LOOP A OUTLET NOZZLE TO VESSEL
5N	AUT	8/15/90	B-D/B1.4	LOOP A OUTLET INTEGRAL EXTENSION
A-1	AUT	*******	B-F/B1.6	LOOP A OUTLET NOZZLE TO SAFE END (NOT EXAMINED DUE TO PREVIOUS ACCEPTABLE 2nd INTERVAL EXAM)
A-2	AUT	*******	B-F/B4.1	LOOP A OUTLET NOZZLE TO SAFE END (NOT EXAMINED DUE TO PREVIOUS ACCEPTABLE 2nd INTERVAL EXAM)
6N	AUT	8/13/90	B-D/B1.4	LOOP A INLET NOZZLE TO VESSEL
6N	AUT	8/15/90	B-D/B1.4	LOOP A INLET NOZZZLE INNER RADIUS
A-18	AUT	8/13/90	B-F/B1.6	LOOP A INLET NOZZLE TO SAFE END
A-17	AUT	8/13/90	B-F/B4.1	LOOP A INLET SAFE END TO PIPE

REACTOR COOLANT SYSTEM
REACTOR VESSEL

INDEX: 1.1.1
SKETCH/ISO: 1-1400 & 1-29A

ITEM	NDE PROCESS	DATE	CODE CATEGORY	REMARKS
1-S	AUT	8/10/90	B-H/B1.12	INTEGRALLY WELDED VESSEL SUPPORT
2-S	AUT	8/10/90	B-H/B1.12	INTEGRALLY WELDED VESSEL SUPPORT
3-S	AUT	8/10/90	B-H/1.12	INTEGRALLY WELDED VESSEL SUPPORT
B-1	PT	7/08/90	B-F/B1.6	LOOP B OUTLET NOZZLE TO SAFE END
B-2	PT	7/08/90	B-F/B1.6	LOOP B OUTLET SAFE END TO PIPE (INDICATION-ACCEPTABLE, SEE EXAM REPORT FOR THE INDICATION EVALUATION SHEET)
B-18	PT	7/08/90	B-F/B1.6	LOOP B INLET NOZZLE TO SAFE END
B-17	PT	7/08/90	B-F/B1.6	LOOP B INLET SAFE END TO PIPE (INDICATION-ACCEPTABLE, SEE EXAM REPORT FOR THE INDICATION EVALUATION SHEET)
C-1	PT	7/08/90	B-F/B1.6	LOOP C OUTLET NOZZLE TO SAFE END
C-2	PT	7/08/90	B-F/B1.6	LOOP C OUTLET SAFE END TO PIPE
C-18	PT	7/08/90	B-F/B1.6	LOOP C INLET NOZZLE TO SAFE END
C-17	PT	7/08/90	B-F/B1.6	LOOP C INLET SAFE END TO PIPE
A-1	PT	7/08/90	B-F/B1.6	LOOP A OUTLET NOZZLE TO SAFE END
A-2	PT	7/08/90	B-F/B1.6	LOOP A OUTLET SAFE END TO PIPE

REACTOR COOLANT SYSTEM
REACTOR VESSEL

INDEX: 1.1.1
SKETCH/ISO'S: 1-29A, 1-1100 & 1-1300

ITEM	NDE PROCESS	DATE	CODE CATEGORY	REMARKS
A-18	PT	7/08/90	B-F/B1.6	LOOP A INLET NOZZLE TO SAFE END
A-17	PT	7/08/90	B-F/B1.6	LOOP A INLET SAFE END TO PIPE
6-C	MUT	7/26/90	B-C/B1.3	
7C	VISUAL		B-B/B1.3	CLOSURE HEAD TO DOME WELD (VT2 AT PRESSURE, PER RELIEF REQUEST DOCKET NO. 50-206)
CRDM59 WELD 866	MUT	7/22/90	B-O/B1.18	
8CR	VISUAL	8/04/90	B-E/B1.5	
18CR	VISUAL	8/04/90	B-E/B1.5	
28CR	VISUAL	8/04/90	B-E/B1.5	
38CR	VISUAL	8/04/90	B-E/B1.5	
48CR	VISUAL	8/04/90	B-E/B1.5	
58CR	VISUAL	8/04/90	B-E/B1.5	
3CR	VISUAL	8/04/90	B-E/B1.5	
13CR	VISUAL	8/04/90	B-E/B1.5	
23CR	VISUAL	8/04/90	B-E/B1.5	
33CR	VISUAL	8/04/90	B-E/B1.5	
43CR	VISUAL	8/04/90	B-E/B1.5	
53CR	VISUAL	8/04/90	B-E/B1.5	

REACTOR COOLANT SYSTEM
REACTOR VESSEL

INDEX: 1.1.1
SKETCH/ISO: 1-1100 & 1-1300

ITEM	NDE PROCESS	DATE	CODE CATEGORY	REMARKS
CLADDING STUD HOLE #5 AREA	VISUAL	8/04/90	B-I-1/B1.13	(36 SQUARE IN.)
CLADDING STUD HOLE #25 AREA	VISUAL	8/04/90	B-I-1/B1.13	(36 SQUARE IN.)
CLADDING STUD HOLE #40 AREA	VISUAL	8/04/90	B-I-1/B1.13	(36 SQUARE IN.)
RV CLADD AREA 1	VISUAL	8/02/90	B-I-1/B1/14	(36 SQUARE IN.)
RV CLADD AREA 2	VISUAL	8/02/90	B-I-1/B1.14	(36 SQUARE IN.)
RV CLADD AREA 3	VISUAL	8/02/90	B-I-1/B1.14	(36 SQUARE IN.)
RV CLADD AREA 4	VISUAL	8/02/90	B-I-1/B1.14	(36 SQUARE IN.)
RV CLADD AREA 5	VISUAL	8/02/90	B-I-1/B1.14	(36 SQUARE IN.)
RV CLADD AREA 6	VISUAL	8/02/90	B-I-1/B1.14	(36 SQUARE IN.)
RV INTER.	VISUAL	8/02/90	B-N-1/B1.15	(ACCESSIBLE AREAS)
RV UPPER INTERNAL SUPPORTS	VISUAL	7/30/90	B-N-3/B1.17	(ACCESSIBLE AREAS)
RV LOWER INTERNAL SUPPORTS	VISUAL	8/06/90	B-N-3/B1.17	CONFIRMED INDICATIONS PREVIOUSLY IDENTIFIED FOR REPAIR DURING THE UNIT 1 CYCLE 11 OUTAGE CORE BARREL)

REACTOR COOLANT SYSTEM
REACTOR VESSEL

INDEX: 1.1.1
SKETCH/ISO: 1-1300

ITEM	NDE PROCESS	DATE	CODE CATEGORY	REMARKS
# 29-42 14 EACH WASHERS	VISUAL	8/05/90	B-G-1/B1.10	
# 29-42 14 EACH STUDS & NUTS	MUT-MT	7/30/90	B-G-1/B1.8	

Rockwell International
Rocketdyne Division

SUPPORTING DOCUMENT

GO NO.	S/A NO.	PAGE 1 OF	TOTAL PAGES	REV LTR/CHG NO. SEE SUMMARY OF CHG	NUMBER
71029	20020	61	61	New	204ER000001

PROGRAM TITLE

San Onofre Nuclear Generating Station (SONGS) Unit 1 Reactor Vessel Inservice Inspection

DOCUMENT TITLE

SONGS Unit 1 Reactor Vessel Inservice Inspection – August 1990

DOCUMENT TYPE

Engineering Report

KEY NOUNS

ISI, AUT, RPV, NDE, SONGS

ORIGINAL ISSUE DATE

REL. DATE 12-17-90 RC

APPROVALS — DATE

J. M. Harris 12/14/90

W. R. Johnson, Level III 12/17/90

E. Sank 12/14/90

PREPARED BY/DATE — DEPT — MAIL ADDR

R. A. Marshall 12/11/90 — 642 — T009

IR&D PROGRAM? YES ☐ NO ☒
IF YES, ENTER TPA NO.

DISTRIBUTION

*	NAME	MAIL ADDR
	E. Baumeister	HB15
	R. Fuhrer	T039
	R. B. Hardy	T009
*	J. M. Harris	T009
	P. H. Horton	T020
	W. R. Johnson	T009
	C. H. Knox	T009
	R. A. Marshall	T009
*	R. M. Mucica (2)	HA02
	B. Pilling	T038
	C. D. Richards	HB18
*	E. Sank (4)	HA02

D642-0013/sjh

* COMPLETE DOCUMENT

NO ASTERISK, TITLE PAGE/SUMMARY OF CHANGE PAGE ONLY

ABSTRACT

The inservice inspection of the SONGS Unit 1 reactor pressure vessel was performed in accordance with the ASME Boiler and Pressure Vessel Code Section XI 1974 Edition, with Addenda through Winter 1975 and the U.S. NRC Regulatory Guide 1.150, Rev. 1. Automated ultrasonic (AUT), and manual ultrasonic (MUT) examinations of the vessel shell welds, nozzles, safe ends, studs, nuts, and vessel supports were performed. Magnetic particle (MT) examinations were performed on the RPV studs and nuts. Penetrant (PT) examinations were performed of the nozzle safe ends. Visual (VT) examination of clad areas 1 through 6, vessel interior, closure head cladding, control rod penetrations, core barrel, and the upper and lower internals were also performed.

This report contains a description of the equipment, examination techniques, and the results of this examination, completed on August 20, 1990.

The following packages complete the SONGS Unit 1 inspection report.

a. 204DP000001, "The Examination Plan and Examination Procedures."
b. 204DP000002, "Personnel and Equipment Certifications and AUT Calibration Data."
c. 204DP000003, "Examination Data: MUT, MT, PT and VT Examination Data. AUT Loop A, Nozzle to Vessel Welds, Nozzle Inside Radius Section, and Nozzle Safe End Welds."
d. 204DP000004, AUT Examination Data: Loop B and Loop C, Nozzle to Vessel Welds, Nozzle Inside Radius Section and Nozzle Safe End Welds."
e. 204DP000005, "AUT Examination Data: Longitudinal Shell Welds."
f. 204DP000006, "AUT Examination Data: Circumferential Shell Welds and Vessel Support Welds."
g. Computer Data Tapes SOT001, SOT002, and SOT003 containing the AUT data.
h. VHS Video Tapes No. 1, 2, 3, and 4 containing the remote visual examinations.

REV	SUMMARY OF CHANGE	APPROVALS AND DATE
A	Pg. 5, Section B, 1st sentence, add "USK-6" Pg. 6, Section A, add item 12. Pg. 9, Section A, add item 12. Pg. 10, Section B, delete "Ligament Area Examinations" Pg. 16, add entry on Ligament Area	W. Johnson 2/14/91 R. Marshall 2/14/91 2/14/91 2/14/91 Rel. DATE: 2-26-91

CONTENTS

I. INTRODUCTION

An Inservice Inspection of the reactor pressure vessel at the San Onofre Nuclear Generating Station (SONGS) Unit 1 was conducted by the Rocketdyne Division (RD) of Rockwell International, between July 6 and August 20, 1990. These inspections were performed during the thermal shield support replacement outage and mark the end of the second, ten year, inspection interval. The examinations were performed in accordance with Southern California Edison's (SCE) inspection plan.

Items listed in the examination plan were examined in accordance with the requirements of the ASME Boiler and Pressure Vessel Code Section XI, 1974 Edition, with addenda through Winter 1975 and the U.S. NRC Regulatory Guide 1.150, Rev 1, to the extent practical with the access provided and the limitations of component geometry.

Examination procedures, personnel, equipment, and material certification documents were reviewed and approved prior to the start of examinations. Surveillance and witnessing of the examinations and related activities were conducted by the Authorized Nuclear Inservice Inspectors (ANII) and SONGS Quality Assurance personnel.

A description of the examination techniques used during this inspection is contained in this report. A summary of the examination results is also presented.

Included in this report under separate cover are Technical Data Packages 204DP000001, 204DP000002, 204DP000003, 204DP000004, 204DP000005 and 204DP000006. These packages include Rocketdyne's Examination Plan, inspection procedures, personnel and equipment certifications, calibration data and the examination data. Also part of this report are three computer tapes, containing the AUT data, and four VHS video tapes, containing the remote visual examinations.

II. EQUIPMENT

A. AUTOMATED ULTRASONIC

The automated ultrasonic examinations were performed using the Rocketdyne In-service Inspection system. This system is composed of three basic units:

1. A control console
2. A PaR ISI-2 polar manipulator
3. Ultrasonic search units

The control console functions include data acquisition, processing and the remote control of the ultrasonic search units. Data collected from the search units is converted to digital form, processed by the console computer and stored for future reference. The control console also provides manual and computer controlled positioning instructions to the PaR manipulator.

The PaR ISI-2 polar manipulator was developed to inspect the welds in reactor pressure vessels. It provides the positioning for the ultrasonic search units. The six motor drives on the PaR provide the necessary positioning capability to perform all the required AUT examinations. The manipulator's position information is set up to correspond to the reactor vessel coordinate system. All AUT examinations are performed using vessel coordinates. Certain modifications to the PaR device were required to perform the examinations on the SONGS unit 1 reactor vessel.

The PaR manipulator normally uses a ten foot high extension tube to keep the vertical positioning motor above water level. The overhead crane at SONGS unit 1 was not high enough to accommodate the full height of the PaR manipulator. In addition, the relatively small diameter of the reactor vessel required the tripod legs on the PaR to be modified to fit the reactor vessel. Both of these problems were addressed by modifying the tripod legs and feet. Rocketdyne's small diameter set of legs was selected and the PaR's feet were rotated in toward the center of the vessel so they could clamp onto the alignment pins. The legs were extended vertically to keep the drive motor above the water while maintaining the required vertical extension into the reactor vessel. A miscommunication between SCE and Rockwell during the engineering of this solution resulted in the alignment pins interfering with the PaR legs. Adapter plates were constructed during the examination to rotate the upper portion of the PaR's legs to clear the alignment pins.

Ultrasonic search units are specific to each type of examination performed. Several search units are often used for each examination to provide the required ASME Code and Regulatory Guide 1.150 coverage. Various ultrasonic techniques such as contact, water path, pulse/echo, pitch/catch, shear angle beam and refracted longitudinal wave angle

beam, were used. The specific technique used for a particular examination may be found in the test procedure for that examination.

A more detailed discussion of the automated inspection system is presented in appendix C. This discussion covers the control console, the PaR manipulator, the search units and how the data is acquired.

B. MANUAL ULTRASONIC

The manual ultrasonic (MUT) examinations were conducted using Krautkramer Model USK-6, USK-7 and USL-38 ultrasonic test instruments. Straight beam and 45 degree and 60 degree angle beam, 2.25 MHz, search units were used as specified by the referencing code section. The couplant used for all manual examinations was Ultragel II.

C. MAGNETIC PARTICLE

Florescent magnetic particle (aerosol packaged in an oil base) materials were used for the magnetic particle (MT) examinations. The materials were supplied by Magnaflux Co.. The certifications for these materials are presented in Volume 2 (204DP000002) of this report.

D. DYE PENETRANT

Solvent removable liquid penetrant materials were used for all dye penetrant (PT) examinations. All solvent, penetrant and developer materials were supplied by Magnaflux Co.. Certifications for these materials are presented in Volume 2 (204DP000002) of this report.

E. REMOTE VISUAL

A MiniRover MKI submersible was used to perform the underwater remote visual examinations. It is equipped with a color CCD video camera with full pan and tilt capabilities. Two quartz iodide lamps provided the required illumination for the examinations. A remote pan and tilt camera was also used to perform the visual examinations of the reactor vessel head. All examinations were recorded on VHS video tape for future reference.

III. COMPONENTS EXAMINED

A. REACTOR PRESSURE VESSEL EXAMINATIONS

The areas examined during the inservice inspection of the SONGS Unit 1 reactor vessel are listed below:

1. Vessel circumferential shell welds 1C, 2C, 3C, 4C and 5C were examined using AUT techniques.
2. Vessel longitudinal shell welds 1L, 2L, 3L, 4L, 5L, 6L, 7L, 8L, 9L, 10L, 11L, 12L, 13L, 14L and 15L were examined using AUT techniques.
3. Nozzle to vessel shell welds A inlet, A outlet, B inlet, B outlet, C inlet and C outlet were examined both from the shell and from the nozzle bore using AUT techniques.
4. Nozzle inside radius sections A inlet, A outlet, B inlet, B outlet, C inlet and C outlet were examined using AUT techniques.
5. Nozzle safe end and safe end to pipe welds in A inlet, A outlet, B inlet and C inlet were examined using AUT and PT techniques. The nozzle safe end and safe end to pipe welds in B outlet and C outlet were examined using PT techniques.
6. Vessel supports 1S, 2S and 3S were examined using AUT techniques.
7. The control rod drive mechanism housing weld no. 59 and the closure head to flange weld 6C were examined using MUT techniques. The closure head studs and nuts were examined using MUT and MT techniques. The closure head washers were visually examined.
8. Clad areas 1 through 6 were examined using remote visual techniques.
9. The accessible areas of the vessel interior were examined using remote visual techniques.
10. The removable vessel upper and lower internal support structures and the core barrel internal and external surfaces were examined using remote visual techniques.
11. The control rod housing nozzle to head welds along with the closure head cladding were examined using remote visual techniques.
12. The reactor vessel flange ligament areas were examined using MUT techniques.

A summary of the components examined and the weld coverage maps are presented in Appendix A. A cross reference of each of the individual examinations is tabulated in Appendix B.

IV. RESULTS

A. EXAMINATION RESULTS

A brief summary of the examination results for each of the areas listed in Section III is presented below:

1. Vessel Shell Circumferential Welds 1C, 2C, 3C, 4C and 5C

   These welds were ultrasonically (AUT) examined. They were examined for parallel, transverse, planar and laminar reflectors using 0, 45 and 60 degree search units. In addition, 70 degree search units were used to examine the near surface region for parallel and transverse reflectors.

   The flange to vessel weld (5C) was examined for parallel reflectors from the flange surface. Refracted L-wave search units with 0, 5, 10 and 15 degree angle beams were used.

   NO REPORTABLE INDICATIONS WERE OBSERVED.

2. Vessel Shell Longitudinal Welds 1L, 2L, 3L, 4L, 5L, 6L, 7L ,8L, 9L, 10L, 11L, 12L, 13L, 14L and 15L

   These welds were ultrasonically (AUT) examined. They were examined for parallel, transverse, and laminar reflectors using 0, 45 and 60 degree search units. In addition, 70 degree search units were used to examine the near surface region for parallel and transverse reflectors.

   NO REPORTABLE INDICATIONS WERE OBSERVED.

3. Nozzle to Vessel Shell Welds, A inlet, A outlet, B inlet, B outlet, C inlet and C outlet

   These welds were ultrasonically (AUT) examined. They were examined for transverse and laminar reflectors from the vessel shell using 0, 45 and 60 degree search units. They were examined for parallel reflectors from the nozzle inbore surface using 0 and 45 degree search units. These welds were also examined for underclad cracking (parallel reflectors) from the nozzle bore using a 45 degree beam.

   NO REPORTABLE INDICATIONS WERE OBSERVED.

4. Nozzle Inside Radius Sections, A inlet, A outlet, B inlet, B outlet, C inlet and C outlet

   These welds were ultrasonically (AUT) examined. The nozzle radii were examined in two directions using 60 degree search units. The remaining inbore

part of the inside radius sections were examined in four directions using 45 degree search units.

NO REPORTABLE INDICATIONS WERE OBSERVED.

5. Nozzle to Safe End and Safe End to Pipe Welds

The welds in A inlet, A outlet, B inlet and C inlet were ultrasonically (AUT) examined. They were examined for parallel and transverse reflectors using 45 degree search units. Surface conditions prevented full coverage of the safe end to pipe welds. This condition is further described in Section B of this report.

NO REPORTABLE INDICATIONS WERE OBSERVED.

The welds in A inlet, A outlet, B inlet, B outlet, C inlet and C outlet were examined with dye penetrant. All of the accessible portions of the dissimilar metal welds were examined. Two (2) recordable indications were observed on the Loop B inlet safe end to pipe weld and two (2) recordable indications were observed on the Loop B outlet safe end to pipe weld. These indications were found to be acceptable.

NO REPORTABLE INDICATIONS WERE OBSERVED.

6. Vessel Support Welds, A, B and C

The vessel support welds were ultrasonically (AUT) examined using a 0 degree straight beam for parallel reflectors.

NO REPORTABLE INDICATIONS WERE OBSERVED.

7. Closure Head Studs, Nuts and Washers

The closure head studs and nuts, 29 through 42, were examined using ultrasonic straight beam (MUT) and magnetic particle techniques. The studs were examined ultrasonically (MUT) from each end surface. The thread and entire outer surface was examined by florescent magnetic particle.

The nuts, 29 through 42, were examined ultrasonically (MUT) from the end surface. The outer cylindrical surfaces were examined with florescent magnetic particle. The washers, 29 through 42, were visually examined.

NO REPORTABLE INDICATIONS WERE OBSERVED.

8. Vessel Cladding Patch Areas 1, 2, 3, 4, 5 and 6

These clad areas were visually examined.

NO REPORTABLE INDICATIONS WERE OBSERVED.

9. Vessel Interior

The accessible areas of the vessel interior were visually examined.

NO REPORTABLE INDICATIONS WERE OBSERVED.

10. Removable Core Support Structure and Vessel Upper and Lower Internals

The accessible areas of the core support structures (core barrel) and the upper and lower internal supports were visually examined. Recordable indications were observed on the flexural fixtures on the core barrel, on the irradiation specimen baskets and on the thermal shield support blocks. Details of these examinations reports are presented in Volume 3 (204DP000003) of this report. The above relevant indications have been previously identified and are presently being repaired under the thermal shield core barrel repair program to be completed during the Unit 1 cycle 11 outage.

11. Reactor Pressure Vessel Head

The closure head to flange weld (6C) and the control rod drive mechanism housing weld (CR 59) were examined using MUT techniques.

NO REPORTABLE INDICATIONS WERE OBSERVED.

The accessible areas of the control rod housing nozzle to vessel welds along with closure head cladding were visually examined.

NO REPORTABLE INDICATIONS WERE OBSERVED.

12. Reactor Pressure Vessel Flange Ligament Areas

The flange ligament areas, between stud holes 29 through 42 were examined using MUT techniques.

NO REPORTABLE INDICATIONS WERE OBSERVED.

B. CODE EXCEPTIONS

1. Coverage

Deviations from the inspection coverage required by Code are described below along with the reason for the limited coverage.

Nozzle to Vessel Welds

The coverage for transverse reflectors on all the nozzle to vessel welds was limited to 300 degrees around the nozzle. This examination was performed from the vessel shell. The inlet and outlet nozzles of each loop are constructed within close proximity of each other. This close proximity along with the outlet nozzle protrusion provided insufficient clearance for the automated equipment to inspect the 60 degree area directly between them.

Loop A & B Outlet Nozzle to Safe End and Safe End to Pipe Welds

The nozzle to safe end and safe end to pipe welds on Loop A outlet nozzle and on Loop B outlet nozzle were not examined at this time. These examinations were performed during the Unit 1, 1980 refueling outage.

Loop B Inlet Nozzle to Safe End Weld

The region approximately 40 degrees to either side of TDC on the Loop B inlet nozzle to safe end weld and safe end to pipe weld was not examined in two directions. Parallel and transverse examinations achieved 90% of full coverage due to unique geometric and surface conditions resulting in trapped air. This condition prevented adequate penetration of the sound path in 10% of the required 100% coverage.

Safe End to Pipe Welds

An attempt was made to examine these welds with the nozzle to safe end equipment configuration. Geometric and surface conditions at the safe end to pipe welds limited the examination coverage. The percentage coverage for each individual weld is presented in the inspection summary table in appendix A.

2. Procedural

One Inspection Discrepancy Report (IDR) was written for this inspection, IDR No. 31717. AUT procedure SO1-XXVII-20.9, Rev. O (204ISI000001), required recalibration and re-examination if any point on the DAC curve has changed by more than 20% (2 db) of its amplitude. The calibration recheck that was performed came in more sensitive than the original calibration, due to transducer wedge wear-in. Since the examination was performed at a higher sensitivity than required by Code and there were no recordable indications observed, the data was accepted as is. This information is documented on the Rocketdyne IDR No. 31717 and SCE NCR No. 90080052-00.

V. EVALUATIONS

The recording and reporting of all indications detected during this inservice inspection were within the standards required by ASME Section XI, 1974 edition with addenda through Winter 1975 and U. S. NRC Regulatory Guide 1.150 revision 1.

Four recordable indications were found during dye penetrant examinations of the loop B safe end to pipe welds. These indications were characterized as rounded and found to be acceptable.

Several visual indications were observed during the remote visual examination of the core barrel on the flexural fixtures on the core barrel, on the irradiation specimen baskets and on the thermal shield support blocks. These indications had been previously identified and are presently being repaired under the thermal shield core barrel repair program.

One ultrasonic indication was evaluated on RPV circumferential weld 4C. This indication is outside the examination boundary. It was evaluated in accordance with ASME XI IWB-3510 and found to be acceptable.

VI. SUMMARY

The inservice examination of the Southern California Edison, San Onofre Unit 1 reactor pressure vessel was conducted in accordance with the provisions of the ASME Boiler and Pressure Vessel Code, Section XI, 1974 Edition with addenda through Winter 1975 and U.S. NRC Regulatory Guide 1.150, revision 1. Volumetric, surface and visual examinations were conducted. Both manual and automated ultrasonic techniques were employed for the volumetric examinations. Magnetic particle and dye penetrant techniques were used for the surface examinations. Remote visual techniques were used for the visual examinations.

No defects requiring repair or rework were detected with the volumetric and surface examinations during this inspection. The visual examinations confirmed several defects that have been previously identified. These defects are presently being repaired under the thermal shield core barrel repair program. Based on the examinations performed on the reactor pressure vessel, this vessel meets the acceptance standards of Section XI of the ASME Code.

APPENDIX A

INSPECTION SUMMARY AND AUT WELD COVERAGE MAPS

INSPECTION SUMMARY AND AUT WELD COVERAGE MAPS

This appendix contains a table summarizing the various examinations performed and the AUT weld coverage diagrams for the August, 1990 ISI of the SONGS Unit 1 reactor vessel. The inspection summary table contains the components examined, the method used and any pertinent findings or coverage notes. The weld locations in the table are referenced to the building coordinates. The building's 0 degree location corresponds to the reactor vessel's 180 degree location.

The AUT weld coverage maps contain detailed information about the Code coverage achieved for each of the welds examined. All of the weld coverage maps and tables are referenced to the reactor vessel coordinate system.

SONGS UNIT 1 INSPECTION SUMMARY - 1990

DESCRIPTION	IWB 2600 REFERENCE	METHOD	EXAMINATION PROCEDURE SO1-XXVII-	REQUIRED COVERAGE	REMARKS (1)
1L BOTTOM HEAD PEEL AT 0°	B-B/B1.2	AUT	20.9 & 20.11	10%	
2L BOTTOM HEAD PEEL AT 60°	B-B/B1.2	AUT	20.9 & 20.11	10%	
3L BOTTOM HEAD PEEL AT 120°	B-B/B1.2	AUT	20.9 & 20.11	10%	
4L BOTTOM HEAD PEEL AT 180°	B-B/B1.2	AUT	20.9 & 20.11	10%	
5L BOTTOM HEAD PEEL AT 240°	B-B/B1.2	AUT	20.9 & 20.11	10%	
6L BOTTOM HEAD PEEL AT 300°	B-B/B1.2	AUT	20.9 & 20.11	10%	
7L LOWER COURSE AT 37.5°	B-A/B1.1	AUT	20.9 & 20.11	50%	
8L LOWER COURSE AT 157.5°	B-A/B1.1	AUT	20.9 & 20.11	50%	
9L LOWER COURSE AT 277.5°	B-A/B1.1	AUT	20.9 & 20.11	50%	
10L LOWER COURSE AT 95.5°	B-A/B1.1	AUT	20.9 & 20.11	50%	
11L LOWER COURSE AT 217.5°	B-A/B1.1	AUT	20.9 & 20.11	50%	
12L LOWER COURSE AT 337.5°	B-A/B1.1	AUT	20.9 & 20.11	50%	
13L LOWER COURSE AT 37.5°	B-A/B1.1	AUT	20.9 & 20.11	10%	
14L LOWER COURSE AT 157.5°	B-A/B1.1	AUT	20.9 & 20.11	10%	
15L LOWER COURSE AT 277.5°	B-A/B1.1	AUT	20.9 & 20.11	10%	
1C BOTTOM HEAD TO DOME	B-B/B1.2	AUT	20.9 & 20.11	5%	
2C BOTTOM HEAD TO SHELL	B-A/B1.1	AUT	20.9 & 20.11	50%	
3C MIDDLE SHELL TO LOWER GIRTH	B-A/B1.1	AUT	20.9 & 20.11	50%	
4C MIDDLE SHELL TO UPPER GIRTH	B-A/B1.1	AUT	20.9 & 20.11	50%	Recordable indication outside of exam boundary
5C UPPER SHELL TO FLANGE, SHELL	B-C/B1.3	AUT	20.9 & 20.11	100%	
5C UPPER SHELL TO FLANGE, FLANGE	B-C/B1.3	AUT	20.9 & 20.11	33-1/3%	100% examined
6N-NOZZLE TO VESSEL AT 285°	B-D/B1.4	AUT	20.12 & 20.16	100%	91.5% (2),(4)
6N-NOZZLE INNER RADIUS AT 285°	B-D/B1.4	AUT	20.8	100%	
A-18 NOZZLE TO SAFE END AT 285°	B-F/B1.6	AUT	20.13	100%	68% SEP-T, 60% SEP-P (3)
A-18 NOZZLE TO SAFE END AT 285°	B-F/B1.6	PT	22.5	21%	(2)
2N-NOZZLE TO VESSEL AT 45°	B-D/B1.4	AUT	20.12 & 20.16	100%	91.5% (2),(4)
2N-NOZZLE INNER RADIUS AT 45°	B-D/B1.4	AUT	20.8	100%	
B-18 NOZZLE TO SAFE END AT 45°	B-F/B1.6	AUT	20.13	100%	90% (4)
B-18 NOZZLE TO SAFE END AT 45°	B-F/B1.6	PT	22.5	21%	(2)
					84% SEP-T, 73% SEP-P (3)
4N-NOZZLE TO VESSEL AT 165°	B-D/B1.4	AUT	20.12 & 20.16	100%	91.5% (2),(4)
4N-NOZZLE INNER RADIUS AT 165°	B-D/B1.4	AUT	20.8	100%	
C-18 NOZZLE TO SAFE END AT 165°	B-F/B1.6	AUT	20.13	100%	85% SEP-T, 74% SEP-P (3)
C-18 NOZZLE TO SAFE END AT 165°	B-F/B1.6	PT	22.5	21%	(2)
5N-NOZZLE TO VESSEL AT 240°	B-D/B1.4	AUT	20.12 & 20.16	100%	91.5% (2),(4)
5N-NOZZLE INNER RADIUS AT 240°	B-D/B1.4	AUT	20.8	100%	
A-1 NOZZLE TO SAFE END AT 405°	B-F/B1.6	PT	22.5	21%	
1N-NOZZLE TO VESSEL AT 0°	B-D/B1.4	AUT	20.12 & 20.16	100%	91.5% (2),(4)
1N-NOZZLE INNER RADIUS AT 0°	B-D/B1.4	AUT	20.8	100%	
B-1 NOZZLE TO SAFE END AT 0°	B-F/B1.6	PT	22.5	21%	
3N-NOZZLE TO VESSEL AT 120°	B-D/B1.4	AUT	20.12 & 20.16	100%	91.5% (2),(4)
3N-NOZZLE INNER RADIUS AT 120°	B-D/B1.4	AUT	20.8	100%	
C-1 NOZZLE TO SAFE END AT 120°	B-F/B1.6	AUT	20.13	100%	51% SEP-T, 50% SEP-P (3)
C-1 NOZZLE TO SAFE END AT 120°	B-F/B1.6	PT	22.5	21%	(2)
1-S INTEGRALLY WELDED AT 82.5°	B-H/B1.12	AUT	20.6	100%	
2-S INTEGRALLY WELDED AT 202.5°	B-H/B1.12	AUT	20.6	100%	
3-S INTEGRALLY WELDED AT 322.5°	B-H/B1.12	AUT	20.6	100%	

(1) ACRONYMS ARE USED TO IDENTIFY SOME WELDS. THE NOZZLE TO SAFE END WELD IS "NSE", THE SAFE END TO PIPE, TRANSVERSE COVERAGE IS "SEP-T." THE SAFE END TO PIPE, PARALLEL COVERAGE IS "SEP-P."

(2) INTERFERENCE DUE TO NOZZLE GEOMETRY

(3) INTERFERENCE DUE TO SURFACE CONDITION

(4) CODE CASE N-460

DESCRIPTION	IWB 2600 REFERENCE	METHOD	EXAMINATION PROCEDURE SO1-XXVII-	REQUIRED COVERAGE	REMARKS
6C CLOSURE HEAD TO FLANGE	B-C/B1.3	MUT	22.6	33-1/3%	
7C CLOSURE HEAD TO DOME	B-B/B1.2	MUT		5%	VT2 at pressure
59-866 CONTROL ROD DRIVE WELD 59	B-O/B1.18	MUT	22.7	100%	
8CR CONTROL ROD HOUSING WELDS	B-E/B1.5	VT	22.4	INNER FACE	
18CR CONTROL ROD HOUSING WELDS	B-E/B1.5	VT	22.4	INNER FACE	
28CR CONTROL ROD HOUSING WELDS	B-E/B1.5	VT	22.4	INNER FACE	
38CR CONTROL ROD HOUSING WELDS	B-E/B1.5	VT	22.4	INNER FACE	
48CR CONTROL ROD HOUSING WELDS	B-E/B1.5	VT	22.4	INNER FACE	
58CR CONTROL ROD HOUSING WELDS	B-E/B1.5	VT	22.4	INNER FACE	
3CR CONTROL ROD HOUSING WELDS	B-E/B1.5	VT	22.4	INNER FACE	
13CR CONTROL ROD HOUSING WELDS	B-E/B1.5	VT	22.4	INNER FACE	
23CR CONTROL ROD HOUSING WELDS	B-E/B1.5	VT	22.4	INNER FACE	
33CR CONTROL ROD HOUSING WELDS	B-E/B1.5	VT	22.4	INNER FACE	
43CR CONTROL ROD HOUSING WELDS	B-E/B1.5	VT	22.4	INNER FACE	
53CR CONTROL ROD HOUSING WELDS	B-E/B1.5	VT	22.4	INNER FACE	
CLADDING NEAR STUD HOLE 5	B-I-1/B1.13	VT	22.4	36 IN.	
CLADDING NEAR STUD HOLE 25	B-I-1/B1.13	VT	22.4	36 IN.	
CLADDING NEAR STUD HOLE 40	B-I-1/B1.13	VT	22.4	36 IN.	
VESSEL CLADDING PATCH, AREA 1	BI-1/B1.14	VT	22.4	36 IN.	
VESSEL CLADDING PATCH, AREA 2	BI-1/B1.14	VT	22.4	36 IN.	
VESSEL CLADDING PATCH, AREA 3	BI-1/B1.14	VT	22.4	36 IN.	
VESSEL CLADDING PATCH, AREA 4	BI-1/B1.14	VT	22.4	36 IN.	
VESSEL CLADDING PATCH, AREA 5	BI-1/B1.14	VT	22.4	36 IN.	
VESSEL CLADDING PATCH, AREA 6	BI-1/B1.14	VT	22.4	36 IN.	
VESSEL INTERIOR	B-N-1/B1.15	VT	22.4	ACCESSIBLE	
VESSEL UPPER INTERNAL SUPPORTS	B-N-3/B1.17	VT	22.4	100%	
VESSEL LOWER INTERNAL SUPPORTS	B-N-3/B1.17	VT	22.4	100%	
29-42 (14 EA) WASHERS	B-G-1/B1/10	VT	22.4	100%	
29-42 (14 EA) STUDS & NUTS	B-G-1/B1.8	MUT,MT	22.1 & 22.10	100%	
29-42 (14 EA) LIGAMENT AREA	B-G-1/B1.9	MUT	20.7	33-1/3%	

AUT WELD COVERAGE OVERVIEW

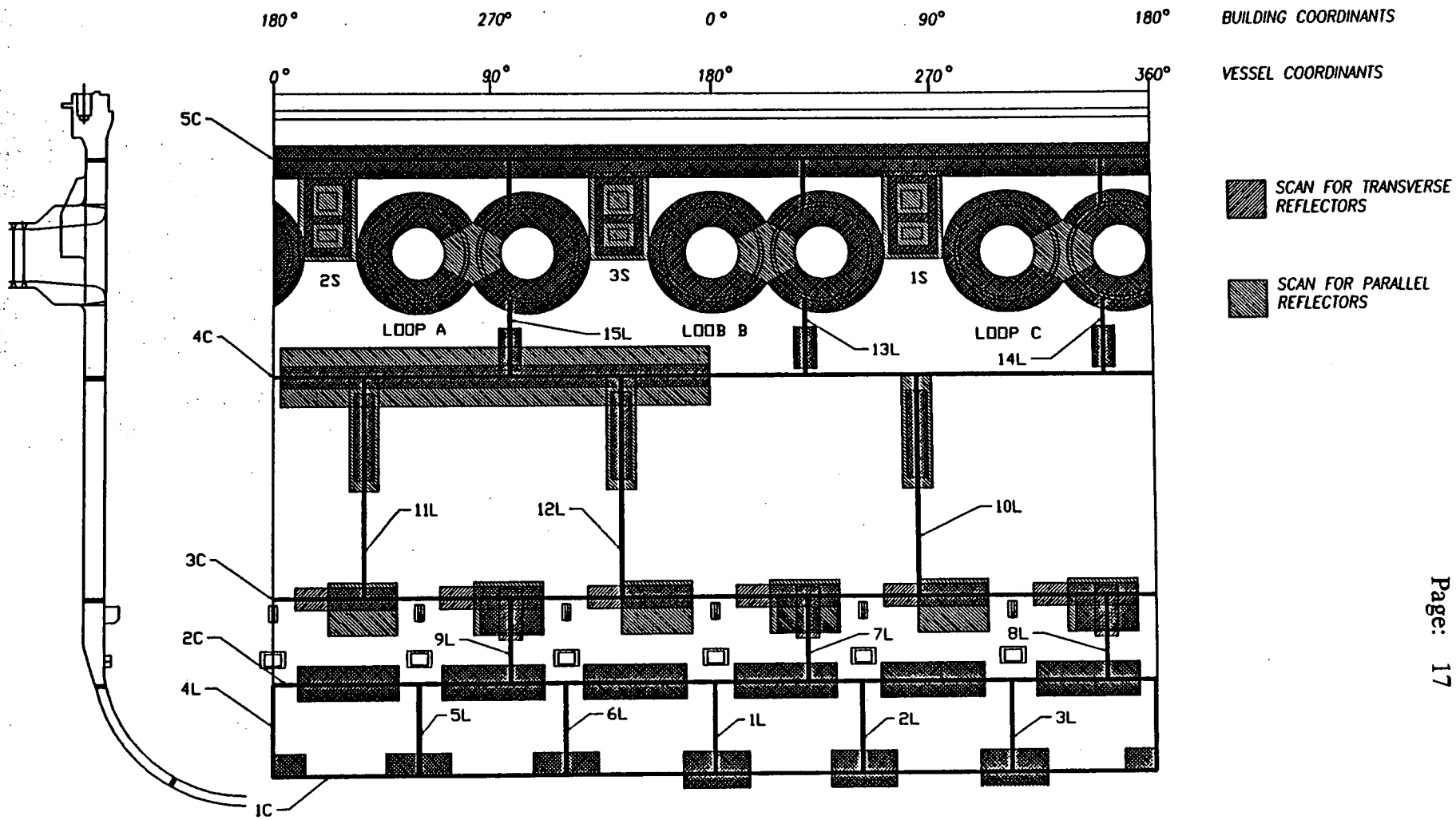

INTERGRALLY WELDED VESSEL SUPPORTS
0 deg. 'L' WAVE

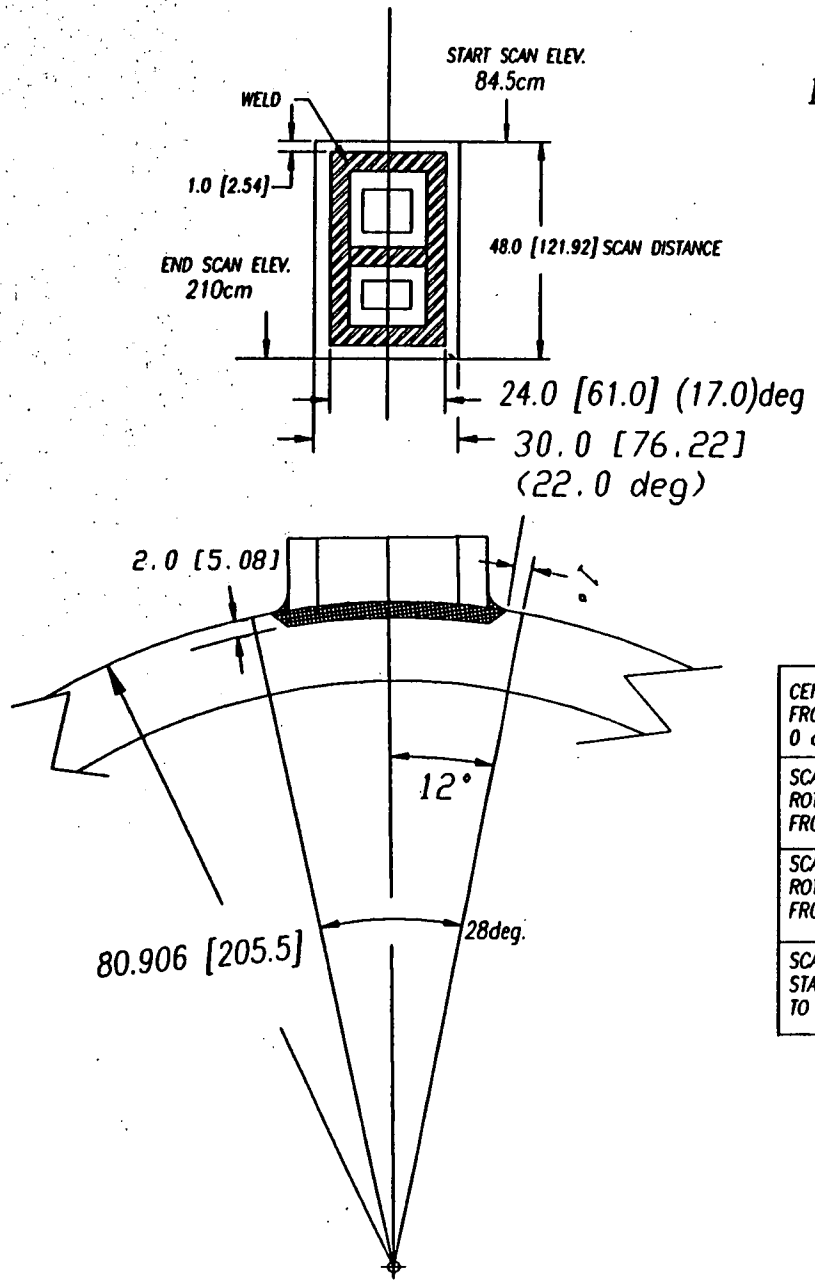

ANGULAR SCAN DIST. CALCULATED @ 3.586cm/deg.
ON 205.5cm RADIUS

DIM. XX.XX INCHES
[XX.XX] cm
(XX.XX) deg

	SUPPORT 2S	SUPPORT 3S	SUPPORT 1S
CENTER LINE FROM VESSEL 0 degree	22.5 deg. CW	142.5 deg. CW	262.5 deg. CW
SCAN START ROTATION FROM 0 deg.	6.0 deg. CW	126.0 deg. CW	245 deg. CW
SCAN END ROTATION FROM 0 deg.	34.5 deg. CW	154.5 deg. CW	274.5 deg. CW
SCAN DISTANCE START SCAN TO END SCAN	28 deg.	28 deg.	28 deg.

WELD 1C

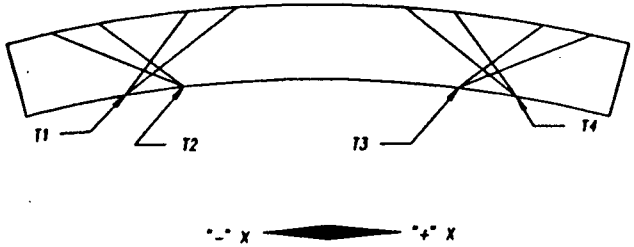

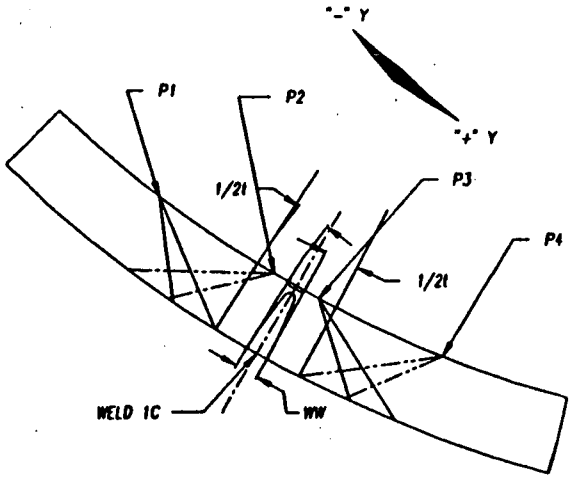

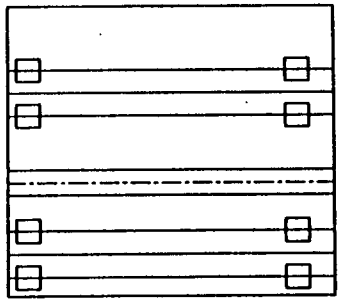

TRANSDUCER LAYOUT CIRC WELD

TRANSDUCER LAYOUT PLUS "Y" MINUS "X" SCAN DIR.

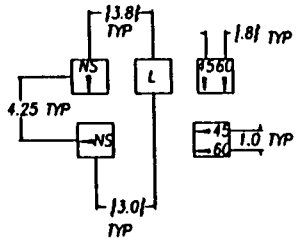

TRANSDUCER LAYOUT MINUS "Y" PLUS "X" SCAN DIR.

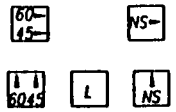

X.XX INCHES
[X.X] DEG.

WELD 1C

SEGMENT		# 1	# 2	# 3
	P1	42.8 deg.	42.8 deg.	42.8 deg.
	P3	65.1 deg.	65.1 deg.	65.1 deg.
	P2	48.6 deg.	48.6 deg.	48.6 deg.
	P4	74.1 deg.	74.1 deg.	74.1 deg.
	T1	163.7 deg.	233.7 deg.	283.7 deg.
	T3	186.7 deg.	242.7 deg.	302.7 deg.
	T2	177.3 deg.	237.3 deg.	297.3 deg.
	T4	196.3 deg.	256.3 deg.	316.3 deg.
NS&L BEG. X		163.7 deg.	223.7 deg.	283.7 deg.
NS&L END X		196.3 deg	256.3 deg.	316.3 deg.
NS&L BEG. Y		45.7 deg.	45.7 deg.	45.7 deg.
NS&L END Y		77.0 deg.	77.0 deg.	77.0 deg.

Scan path calculated for 372.42cm Dia. @3.25cm/deg.

WELD 2C

SCAN COVERAGE EVALUATION
FOR PARALLEL (P)
TRANSVERSE (T)
NEAR SURFACE (NS) AND
LAMINAR (L) REFLECTORS

SEE DATA SHEET
FOR WELD 2C
SCAN COVERAGE
EVALUATION DATA

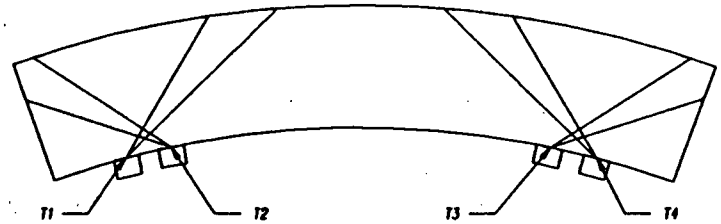

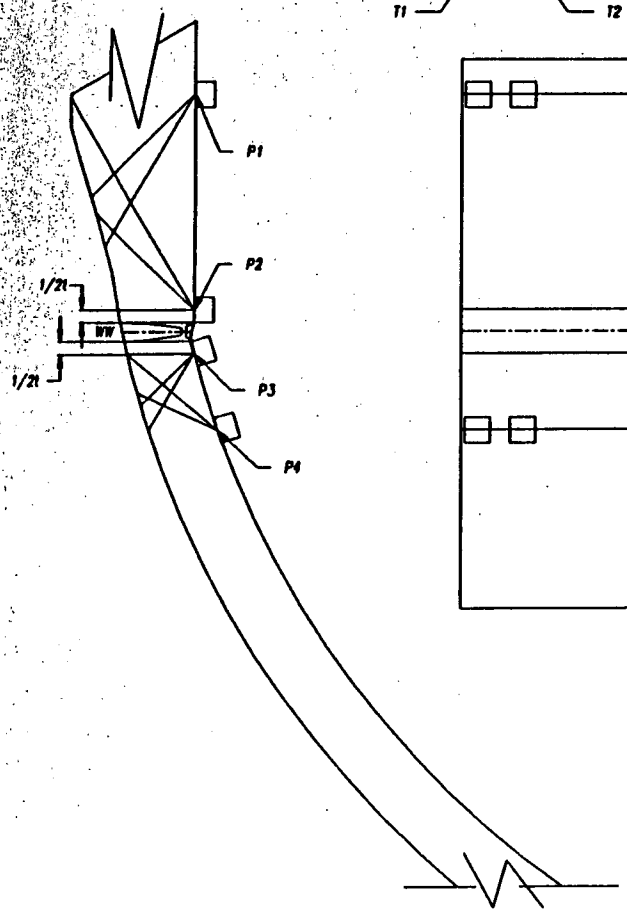

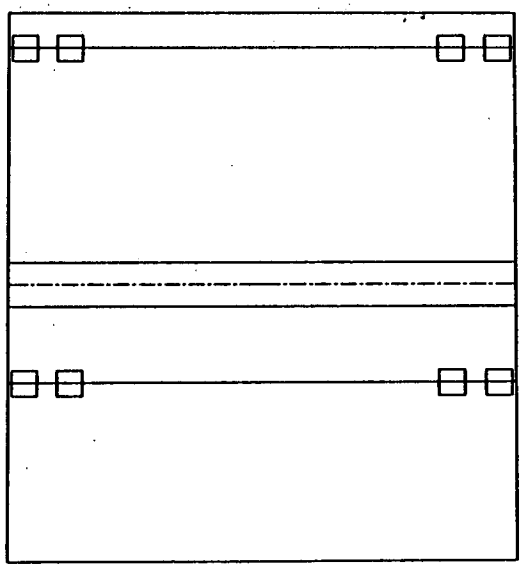

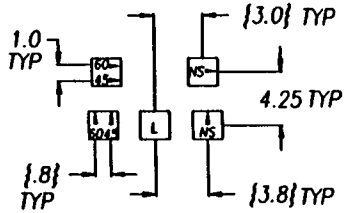

TRANSDUCER LAYOUT
WELD 2C SEGMENT I

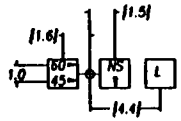

TRANSDUCER LAYOUT
WELD 2C SEGMENT II

TRANSDUCER LAYOUT
WELD 2C SEGMENT III

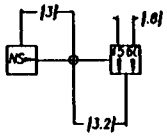

TRANSDUCER LAYOUT
WELD 2C SEGMENT IV

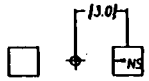

TRANSDUCER LAYOUT
WELD 2C SEGMENT V

X.XX INCHES
{X.X} DEG.

WELD 2C

SEGMENT #	I	II	III	IV	V
P1	--	--	--	--	754.5cm
P3	--	--	--	--	771cm
P2	12.2 deg.	--	--	--	--
P4	19.8 deg.	--	--	--	--
T1	357 deg.	--	358.5 DEG.	--	--
T3	187 deg.	--	187.5 DEG.	--	--
T2	--	1.5 DEG.	--	--	--
T4	--	191.5 DEG.	--	--	--
NS BEG. X	3 deg.	358.5 DEG.	1.5 DEG.	357 DEG.	357 DEG.
NS END X	193 deg.	187.5 DEG.	191.5 DEG.	187 DEG.	187 DEG.
L BEG. X	3 deg.	355.5 DEG.	4.5 DEG.	--	--
L END X	193 deg.	184.5 DEG.	194.5 DEG.	--	--
NS BEG. Y	12.2 DEG.	--	--	--	--
NS END Y	19.8 DEG.	--	--	--	--
L BEG. Y	12.2 DEG	--	--	--	--
L END Y	19.8 DEG.	--	--	--	--
ELEV. BEG.	--	753.5cm	753.5cm	756cm	--
ELEV. END	--	777cm	777cm	771cm	--

All positions include transducer offsets

WELDS 3C AND 4C

SCAN COVERAGE EVALUATION
FOR PARALLEL (P)
TRANSVERSE (T)
NEAR SURFACE (NS)
AND LAMINAR (L) REFLECTORS

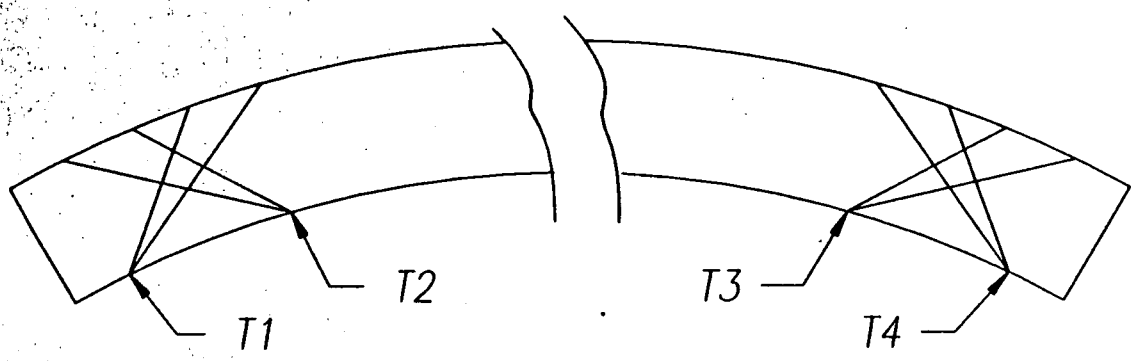

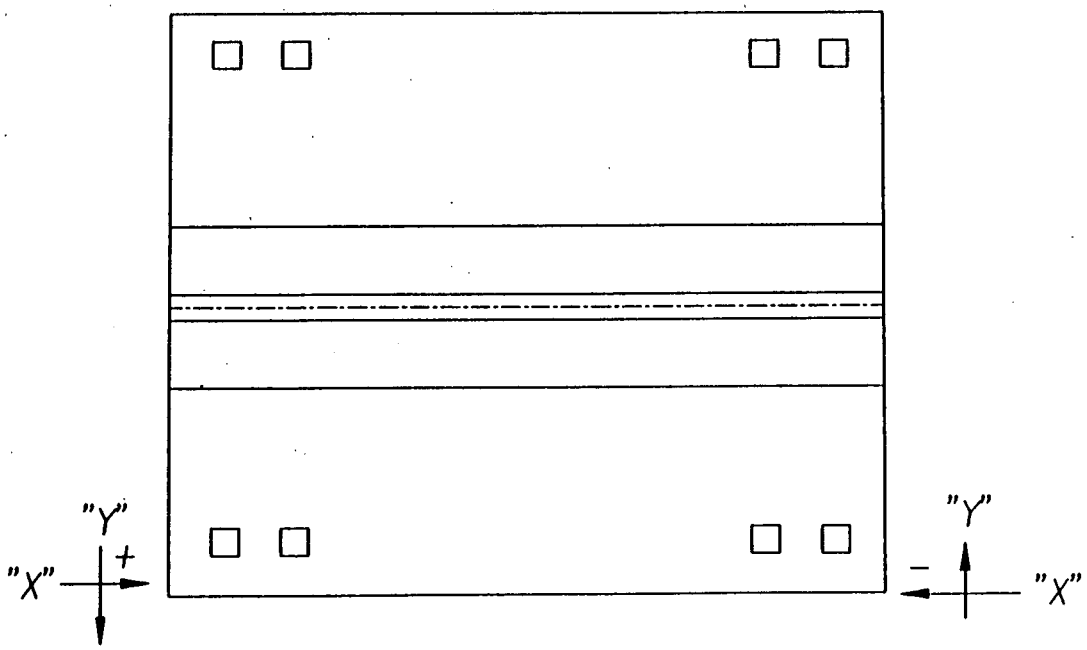

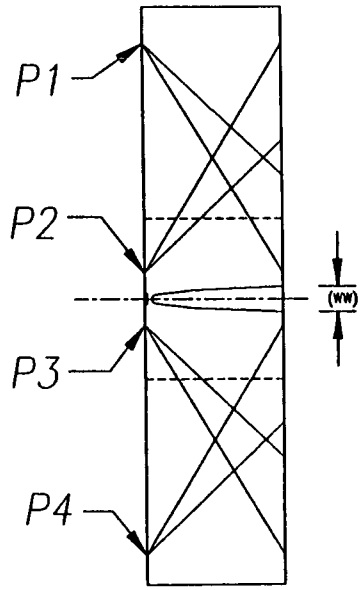

WELD 3C
SEGMENT #1

P1	616cm	
P3	652cm	
T2	3 deg.	ONE REVOLUTION
T4	364 deg.	
NS&L BEG. X	357 deg.	ONE REVOLUTION
NS&L END X	358 deg.	
NS&L BEG. Y	616cm	
NS&L END Y	652cm	

Scan path calculated for 361.47cm Dia. @3.15cm/deg.
Elevation measured from surface B, CE Drawing E-201-860

WELD 3C

SEGMENT #	II	III	IV	V	VI	VII
P1	--	652cm	--	652cm	--	652cm
P3	--	672cm	--	672cm	--	672cm
P2	657cm	--	657cm	--	657cm	--
P4	712cm	--	712cm	--	712cm	--
T1	6.0 deg.	--	66 deg.	--	126 deg.	--
T3	48 deg.	--	108 deg.	--	168 deg.	--
T2	--	12 deg.	--	72 deg.	--	132 deg.
T4	--	54 deg.	--	114 deg.	--	174 deg.
NS&L BEG. X	12 deg.	6 deg.	72 deg.	66 deg.	132 deg.	126 deg.
NS&L END X	54 deg.	48 deg.	114 deg.	108 deg.	174 deg.	168 deg.
NS&L BEG. Y	657cm	652cm	657cm	652cm	657cm	652cm
NS&L END Y	712cm	672cm	712cm	672cm	712cm	672cm

SEGMENT #	VIII	IX	X	XI	XII	XIII
P1	--	652cm	--	652cm	--	652cm
P3	--	672cm	--	672 cm	--	672cm
P2	657cm	--	657cm	--	657cm	--
P4	712cm	--	712cm	--	712cm	--
T1	186 deg.	--	246 deg.	--	307 deg.	--
T3	228 deg.	--	288 deg.	--	349 deg.	--
T2	--	192 deg.	--	252 deg.	--	313 deg.
T4	--	234 deg	--	294 deg.	--	355 deg.
NS&L BEG. X	192 deg.	186 deg.	252 deg.	246 deg.	313 deg.	307 deg.
NS&L END X	234 deg.	228 deg.	294 deg	288 deg.	355 deg.	349 deg.
NS&L BEG. Y	657cm	652cm	657cm	652cm	657cm	652cm
NS&L END Y	712cm	672cm	712cm	672cm	712cm	672cm

Elevation measured from surface B, CE drawing E-201-860
Scan path calculated for 361.47cm Dia. @3.15cm/deg.

WELD 4C

P1	327.6cm
P3	380.4cm
P2	370.6cm
P4	423.3cm
T1	4.2 deg.
T3	189.4 deg.
T2	355.8 deg.
T4	180.8 deg.
NS&L BEG. X	0 deg.
NS&L END X	185 deg.
NS&L BEG. Y	327.6cm
NS&L END Y	423.3cm

Scan path calculated for 361.47cm Dia @3.15cm/deg.
Elevations measured from surface B, CE Drawing E-201-860

SCAN COVERAGE OF WELD 5C

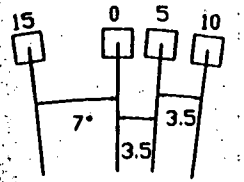

PARALLEL

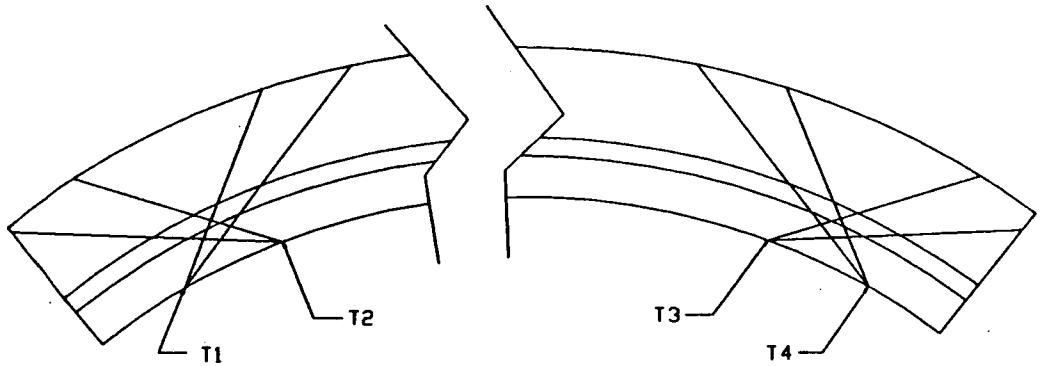

SCAN FROM 0 deg. THRU 361 deg.
@181cm RADIUS TO 184cm RADIUS

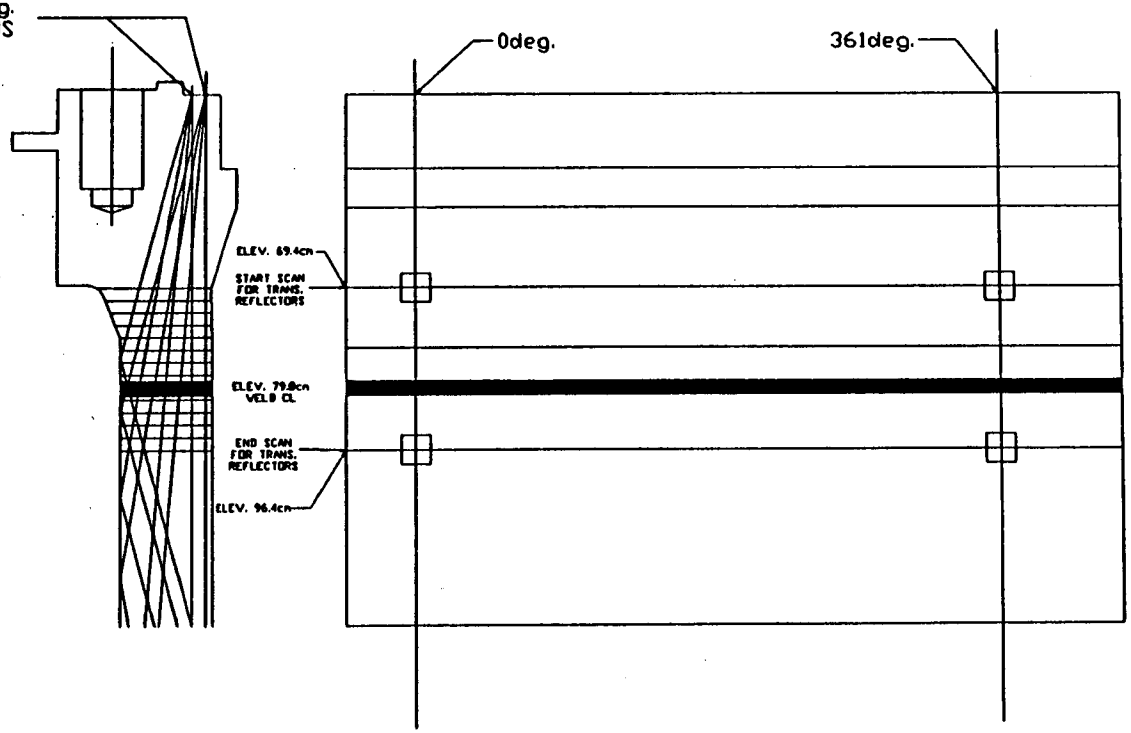

TRANSVERSE

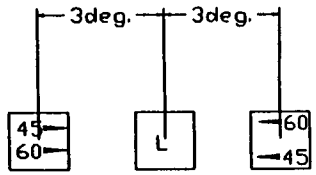

PEEL WELDS 1L – 6L

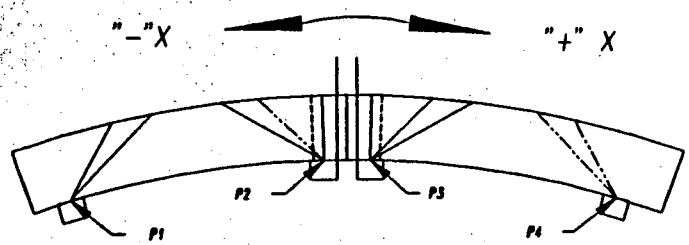

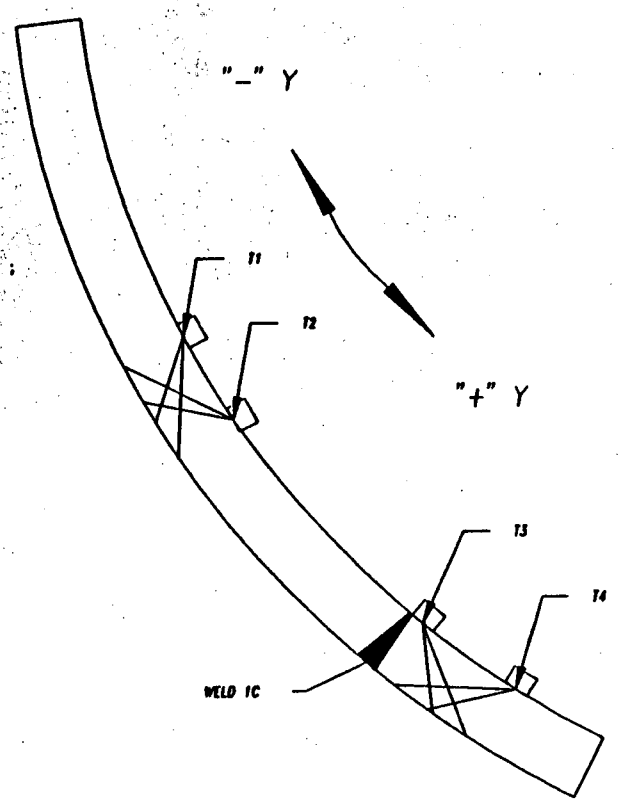

SCAN COVERAGE EVALUATION
FOR PARALLEL (P)
TRANSVERSE (T)
NEAR SURFACE (NS) AND
LAMINAR (L) REFLECTORS

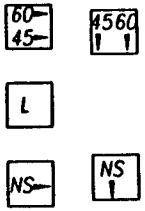

PLUS DIR. SCAN

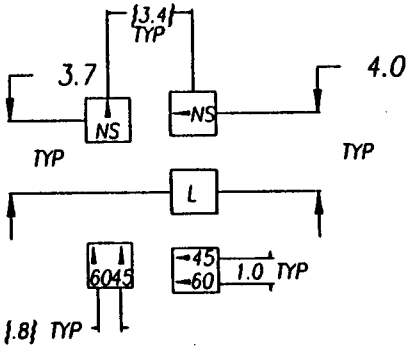

MINUS DIR. SCAN

TRANSDUCER LAYOUT LONG WELDS

X.XX INCHES
{X.X} DEG.

PEEL WELDS

Positions in degrees except as noted

WELD#	1L	2L	3L	4L	5L	6L
CENTER LINE	180	240	300	0	60	120
P1	163.7	223.7	283.7	343.7	43.7	103.7
P3	186.7	242.7	302.7	362.7	62.7	122.7
P2	177	237.3	297.3	357.3	57.3	117.3
P4	196.3	256.3	316.3	376.3	76.3	136.3
T1	42.1	42.1	42.1	42.7	42.7	42.7
T3	65.1	65.1	65.1	57	57	57
T2	48.6	48.6	48.6	48.7	48.7	48.7
T4	79.9	79.9	79.9	63	63	63
NS&L BEG. X	163.7	223.7	283.7	343.7	43.7	103.7
NS&L END X	196.3	256.3	316.3	376.3	76.3	136.3
NS&L BEG. Y	45.7	45.7	45.7	45.7	45.7	45.7
NS&L END Y	77.7	77.7	77.7	60	60	60

Scan path calculated for 372.42cm Dia. @3.25cm/deg.

LONGITUDINAL WELDS 7L – 15L

SCAN COVERAGE EVALUATION
FOR PARALLEL (P)
TRANSVERSE (T)
NEAR SURFACE (NS) AND
LAMINAR (L) REFLECTORS

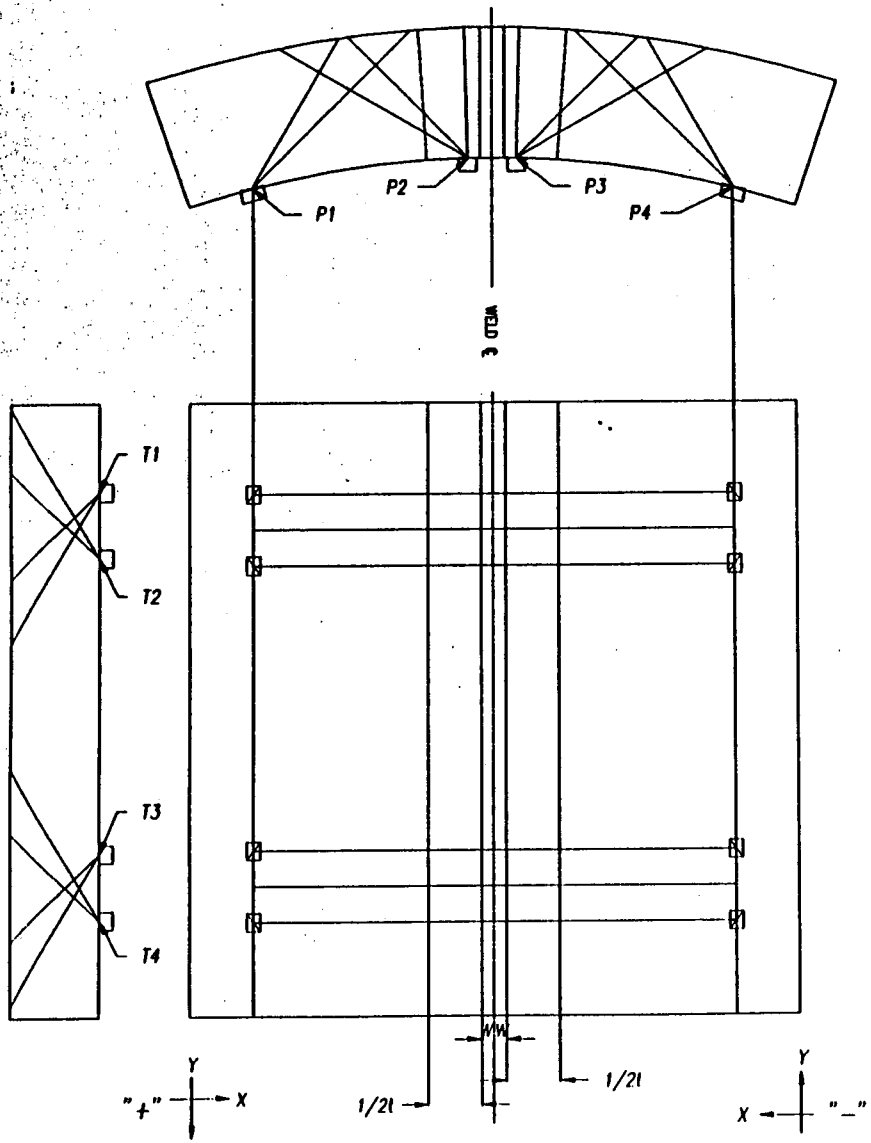

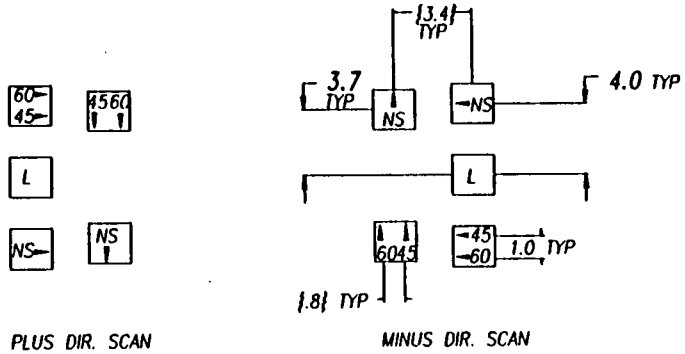

TRANSDUCER LAYOUT LONG WELDS

X.XX INCHES
{X.X} DEG.

LONGITUDINAL WELDS

Positions in degrees except as noted

WELD #	7L	8L	9L	10L	11L	12L	13L	14L	15L
CENTER LINE	217.5	337.5	97.5	277.5	37.5	157.5	217.5	337.5	97.5
P1	202.4	332.4	82.3	262.4	22.3	142.4	202.4	332.4	82.3
P3	219.1	339.1	99.1	279.1	39.1	159.1	219.1	349.1	99.1
P2	216	336	96	276	35.9	156	216	336	95.9
P4	232.7	352.7	113	292.7	52.6	172.7	232.7	352.7	112.7
* T1	642.5	642.5	642.5	353.9	353.9	353.9	293.1	293.1	293.1
* T3	716.5	716.5	716.5	527.9	527.9	527.9	365.9	365.9	365.9
* T2	661.5	661.5	661.5	372.9	372.9	372.9	312.1	312.1	312.1
* T4	735.5	735.5	735.5	546.9	546.9	546.9	384.9	384.9	384.9
NS&L BEG. X	202.4	332.4	82.3	262.4	22.3	142	202.4	332.4	82.3
NS&L END X	232.7	352.7	113	292.7	52.6	172	232.7	352.7	112.7
*NS&L BEG.Y	652	652	652	363.4	363.4	363.4	302.6	302.6	302.6
*NS&L END Y	726	726	726	537.4	537.4	537.4	375.4	375.4	375.4

*Measured in cm. from surface B, CE Drawing E-201-860

Scan path calculated for 361.47cm Dia. @3.15cm/deg.

X.XX INCHES
{X.X} DEG.

TRANSDUCER LAYOUT
PLUS "Y" MINUS "X"
SCAN DIR.

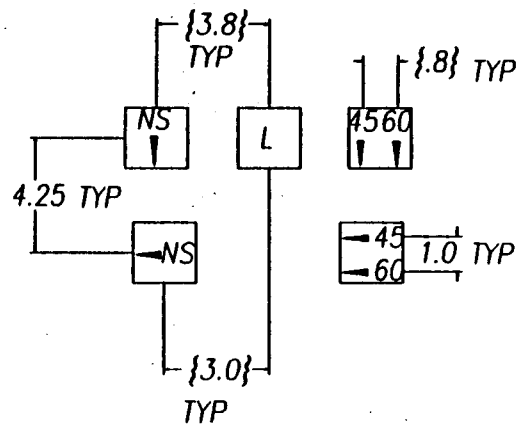

TRANSDUCER LAYOUT CIRC WELD

TRANSDUCER LAYOUT
MINUS "Y" PLUS "X"
SCAN DIR.

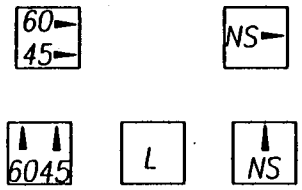

TRANSDUCER LAYOUT
WELD 2C SEGMENT III

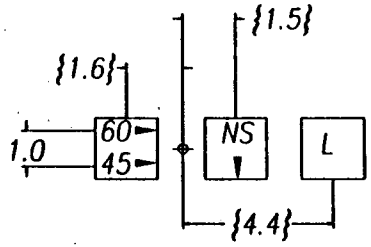

TRANSDUCER LAYOUT
WELD 2C SEGMENT II

X.XX INCHES
{X.X} DEG.

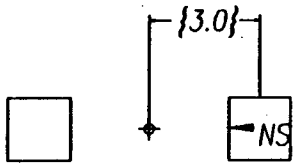

TRANSDUCER LAYOUT
WELD 2C SEGMENT V

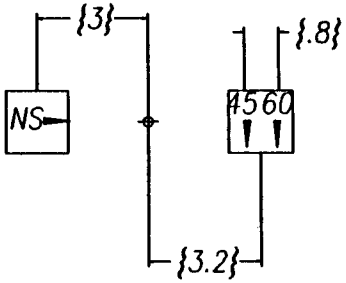

TRANSDUCER LAYOUT
WELD 2C SEGMENT IV

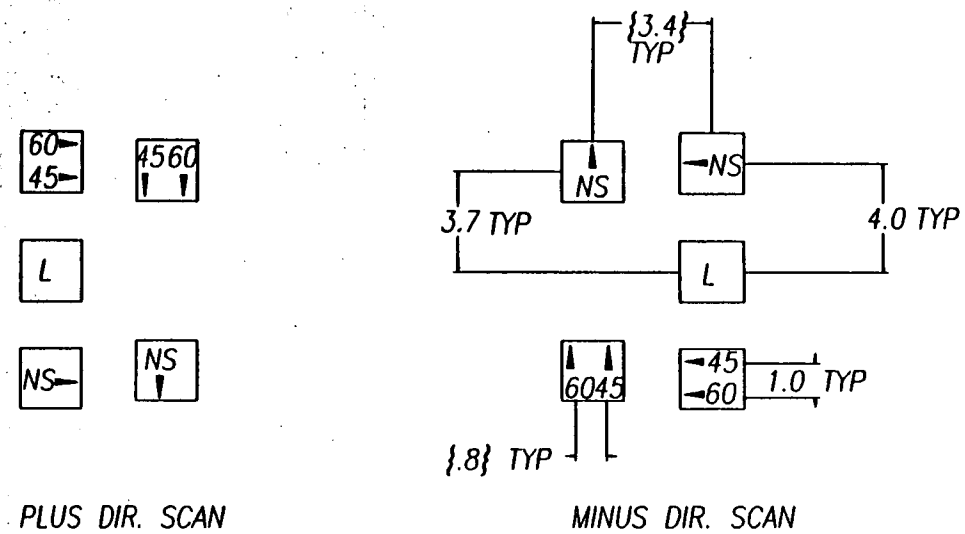

X.XX INCHES
{X.X} DEG.

TRANSDUCER LAYOUT LONG WELDS

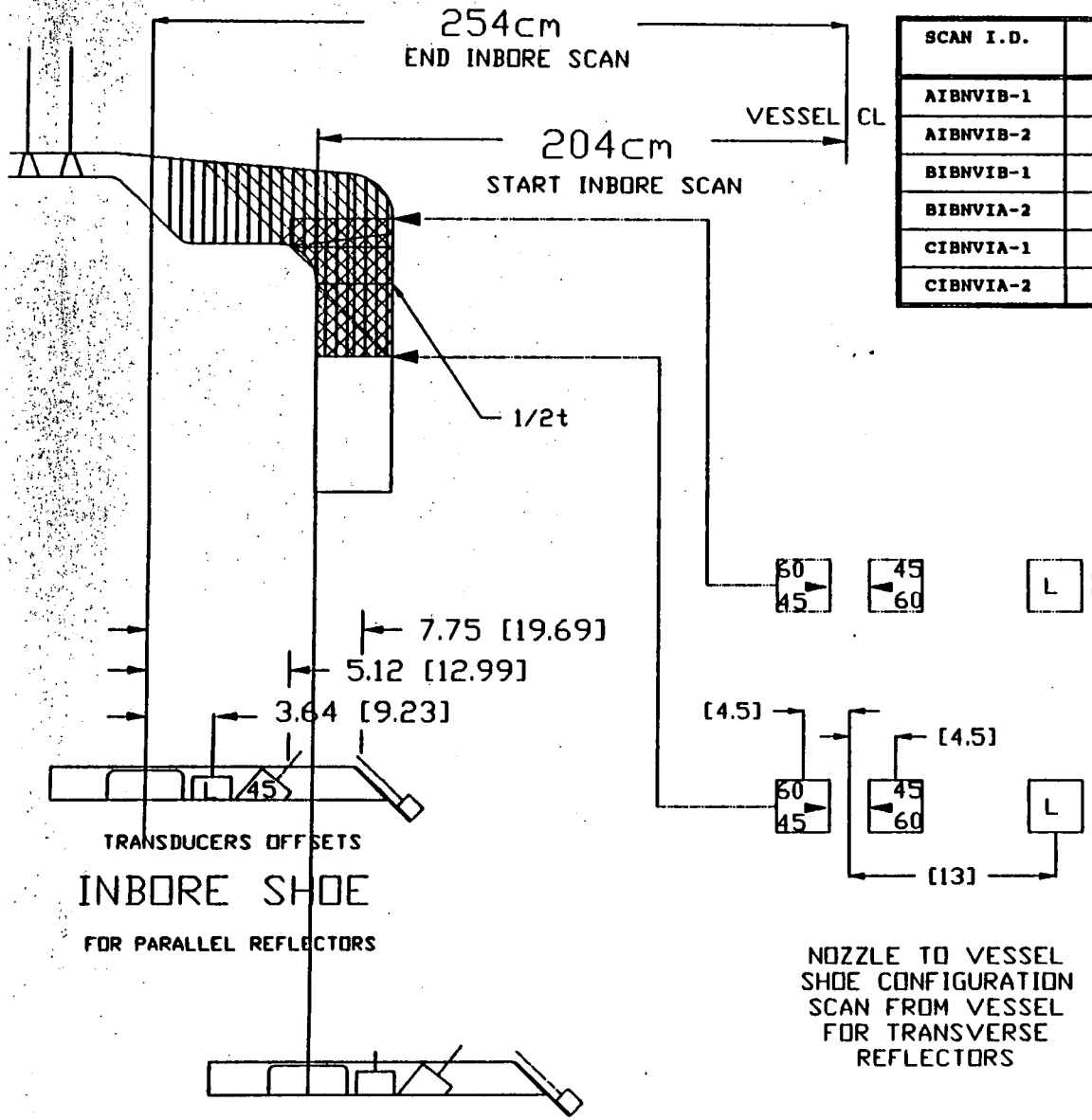

NOZZLE TO VESSEL SHOE CONFIGURATION SCAN FROM VESSEL FOR TRANSVERSE REFLECTORS

X.XX INCHES
[X.XX] cm

NOZZLE TO VESSEL WELD FROM NOZZLE INLETS

SCAN I.D.	DIST. AROUND NOZZLE	START *	STOP *	TRANSDUCERS
AIBNVIB-1	0 - 360 deg.	204cm	221cm	45deg. -Y, L
AIBNVIB-2	0 - 360 deg.	221cm	254cm	"
BIBNVIB-1	0 - 360 deg.	204cm	223cm	"
BIBNVIA-2	0 - 360 ceg.	223cm	254cm	"
CIBNVIA-1	0 - 360 deg.	204cm	220cm	"
CIBNVIA-2	0 - 360 deg.	220cm	254cm	"

NOZZLE TO VESSEL WELD SCAN FROM VESSEL INLETS

SCAN ID	START *	STOP *	TRANSDUCERS
LOOPB-IN-1	0deg.	240deg.	45&60 +X+Y,-X-Y&L
LOOPB-IN-2	300deg.	360deg.	"
LOOPC-IN-1	0deg.	240deg.	"
LOOPC-IN-2	300deg.	360deg.	"
LOOPA-IN-1	0deg.	240deg.	"
LOOPA-IN-2	300deg.	360deg.	"

NOZZLE TO VESSEL WELD SCAN FROM VESSEL OUTLETS

SCAN I.D.	START	STOP	TRANSDUCERS
LOOPA-OUT-1	0deg.	60deg.	45&60 +X+Y,-X-Y&L
LOOPA-OUT-2	120deg.	360deg.	"
LOOPB-OUT-1	0deg.	60deg.	"
LOOPB-OUT-2	120deg.	360deg.	"
LOOPC-OUT-1	0deg.	60deg.	"
LOOPC-OUT-2	120deg.	360deg.	"

NOZZLE TO VESSEL WELD FROM NOZZLE OUTLETS

SCAN I.D.	DIST. AROUND NOZZLE	START	STOP	TRANSDUCERS
AIBNVOC-1	0 - 360 deg.	177cm	219cm	45deg. -Y, L
AIBNVOB-1	0 - 360 deg.	219cm	254cm	"
BIBNVOB-1	0 - 360 deg.	177cm	220cm	"
BIBNVOB-2	0 - 360 deg.	220cm	254cm	"
CIBNVOA-1	0 - 360 deg.	177cm	219.6cm	"
CIBNVOA-2	0 - 360 deg.	219.6cm	254cm	"

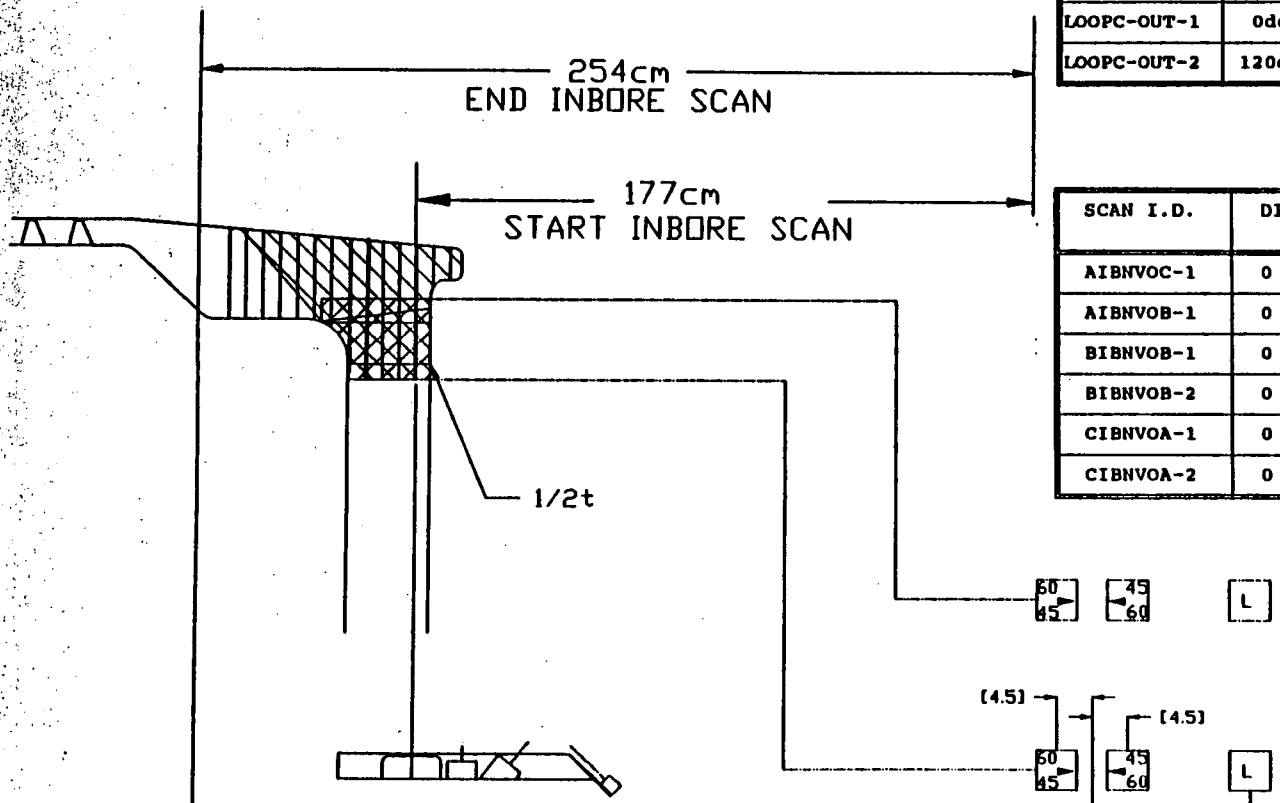

NOZZLE TO VESSEL SHOE CONFIGURATION SCAN FROM VESSEL FOR TRANSVERSE REFLECTORS

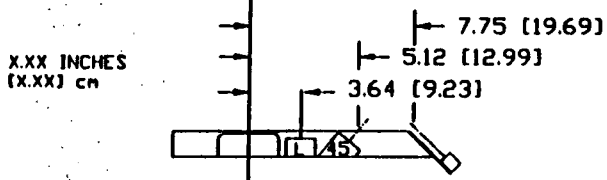

TRANSDUCERS OFFSETS

INBORE SHOE

FOR PARALLEL REFLECTORS

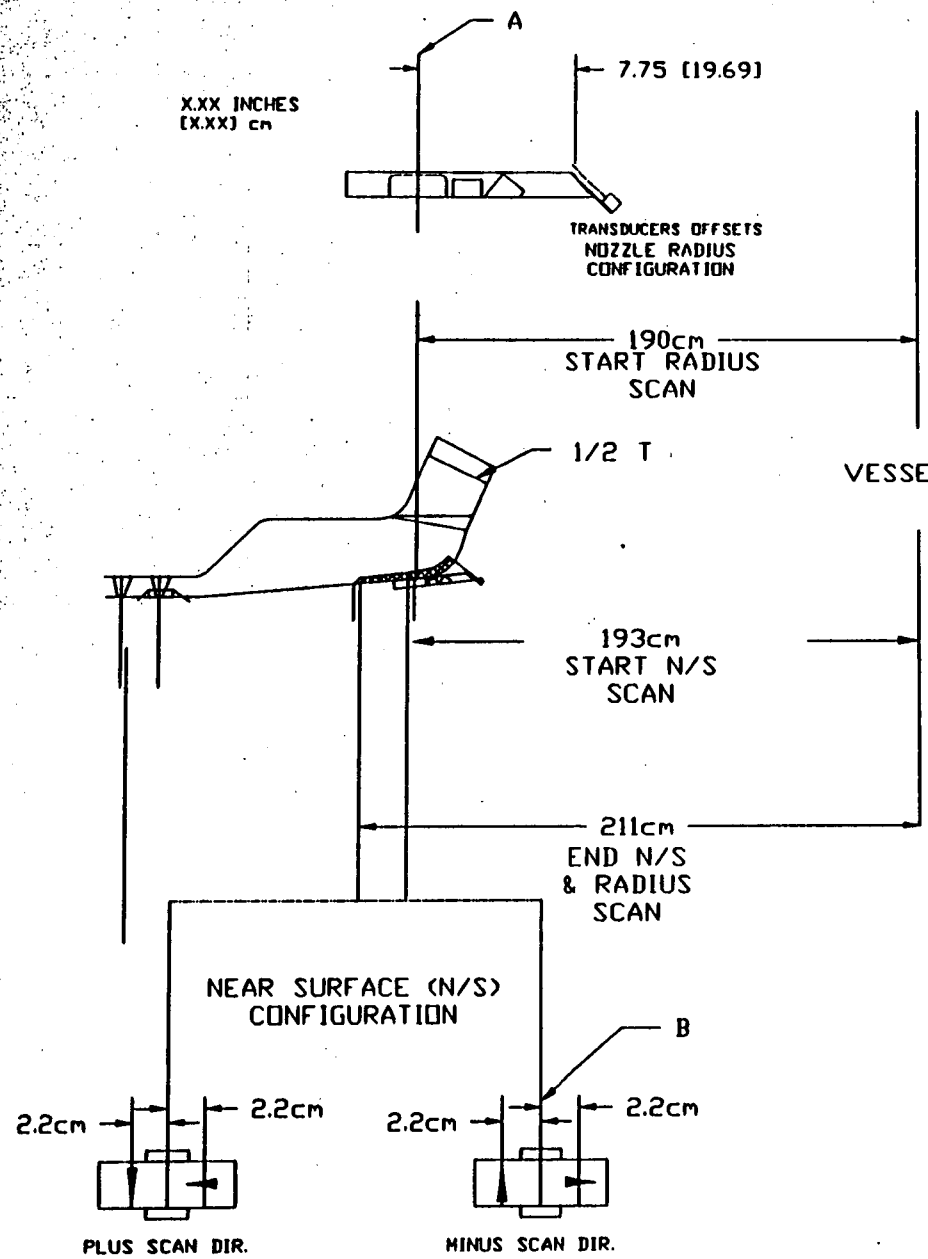

NOZZLE CORNER RADIUS
INLETS

SCAN I.D.	DIST. AROUND NOZZLE	START *	STOP *	TRANSDUCERS
NIRAI+A-1	0 - 360 deg.	190.5cm	211cm	60deg. +X +X
NIRAI-A-1	0 - 360 deg.	190.5cm	211cm	60deg. -X -X
NIRBI+B-1	0 - 360 deg.	189.5cm	211cm	60deg. +X +X
NIRBI-B-1	0 - 360 ceg.	189.5cm	211cm	60deg. -X -X
NIRCI+C-1	0 - 360 deg.	189.5cm	211cm	60deg. +X +X
NIRCI-A-1	0 - 360 deg.	189.5cm	211cm	60deg. -X -X

* FROM POINT "A" ON TRANSDUCER HOLDER

NEARSURFACE SCAN
INLETS

SCAN I.D.	DIST. AROUND NOZZLE	START *	STOP *	TRANSDUCERS
IBNSAI+B-1	0 - 360 deg.	193cm	211cm	45deg. +X +Y
IBNSAI-B-1	0 - 360 deg.	193cm	211cm	45deg. -X -Y
IBNSBI+A-1	0 - 360 deg.	193cm	211cm	45deg. +X +Y
IBNSCI-A-1	0 - 360 deg.	193cm	211cm	45deg. -X -Y
IBNSCI+B-1	0 - 360 deg.	193cm	211cm	45deg. +X +Y
IBNSCI-A-1	0 - 360 deg.	193cm	211cm	45deg. -X -Y

* FROM POINT "B" ON TRANSDUCER HOLDER

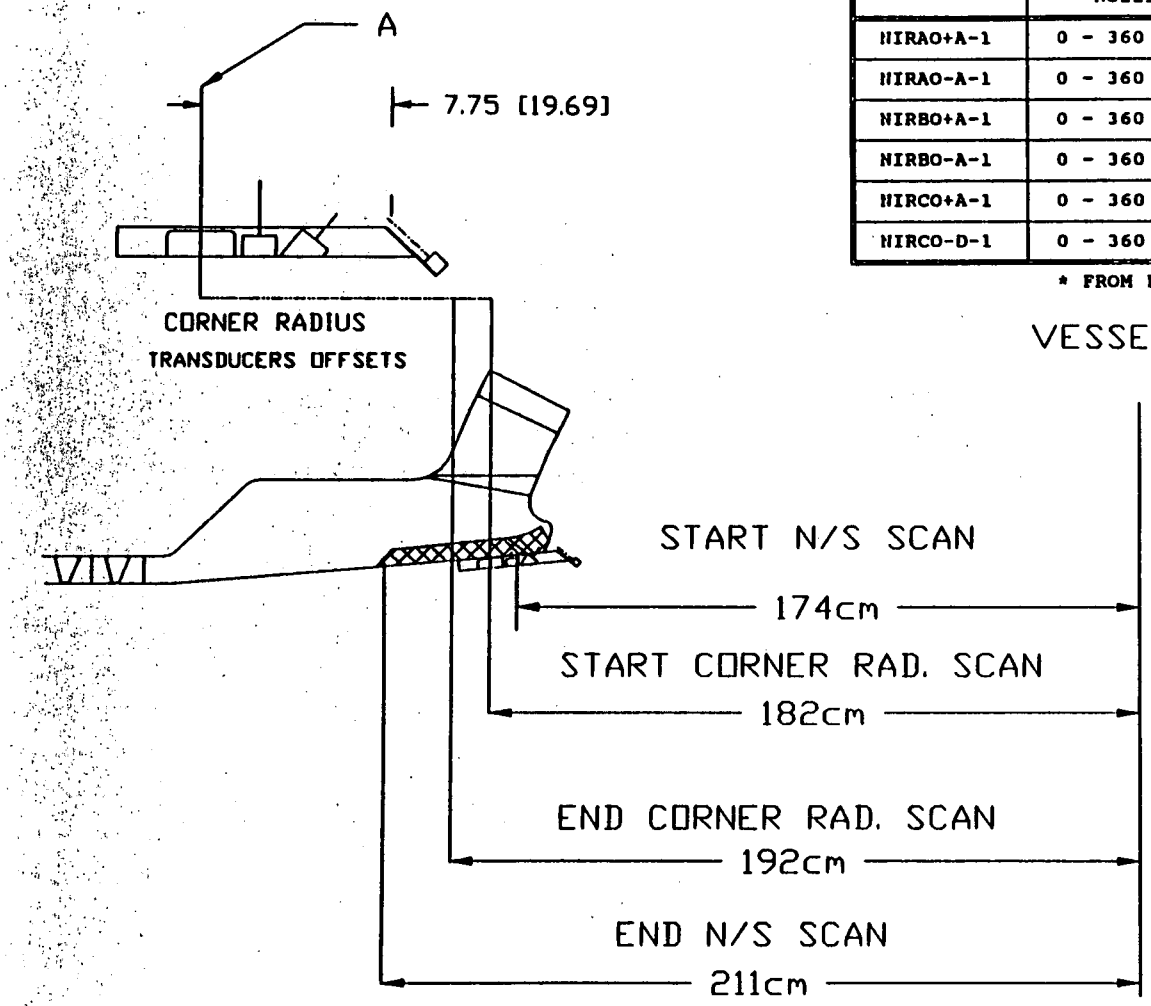

NOZZLE CORNER RADIUS
OUTLETS

SCAN I.D.	DIST. AROUND NOZZLE	*START	*STOP	TRANSDUCERS
NIRAO+A-1	0 - 360 deg.	*182cm	*191.9cm	60deg. +X +X
NIRAO-A-1	0 - 360 deg.	182cm	191.9cm	60deg. -X -X
NIRBO+A-1	0 - 360 deg.	182cm	193cm	60deg. +X +X
NIRBO-A-1	0 - 360 deg.	182cm	192.8cm	60deg. -X -X
NIRCO+A-1	0 - 360 deg.	181cm	191cm	60deg. +X +X
NIRCO-D-1	0 - 360 deg.	181cm	191cm	60deg. -X -X

* FROM POINT "A" ON TRANSDUCER HOLDER

NEAR SURFACE SCAN
OUTLETS

SCAN I.D.	DIST. AROUND NOZZLE	*START	*STOP	TRANSDUCERS
IBNSAO+A-1	0 - 360 deg.	174cm	211cm	45deg. +X +Y
IBNSAO-A-1	0 - 360 deg.	174cm	211cm	45deg. -X -Y
IBNSBO+B-1	0 - 360 deg.	174cm	211cm	45deg. +X +Y
IBNSOC-B-1	0 - 360 deg.	174cm	211cm	45deg. -X -Y
IBNSC+B-1	0 - 360 deg.	174cm	211cm	45deg. +X +Y
IBNSCO-C-1	0 - 360 deg.	174cm	211cm	45deg. -X -Y

* FROM POINT "B" ON TRANSDUCER HOLDER

NEARSURFACE TRANSDUCER
CONFIGURATION

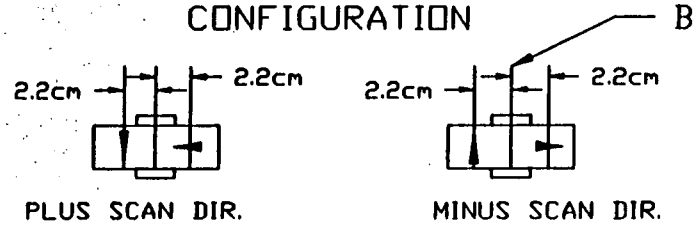

SAFE-END WELD COVERAGE

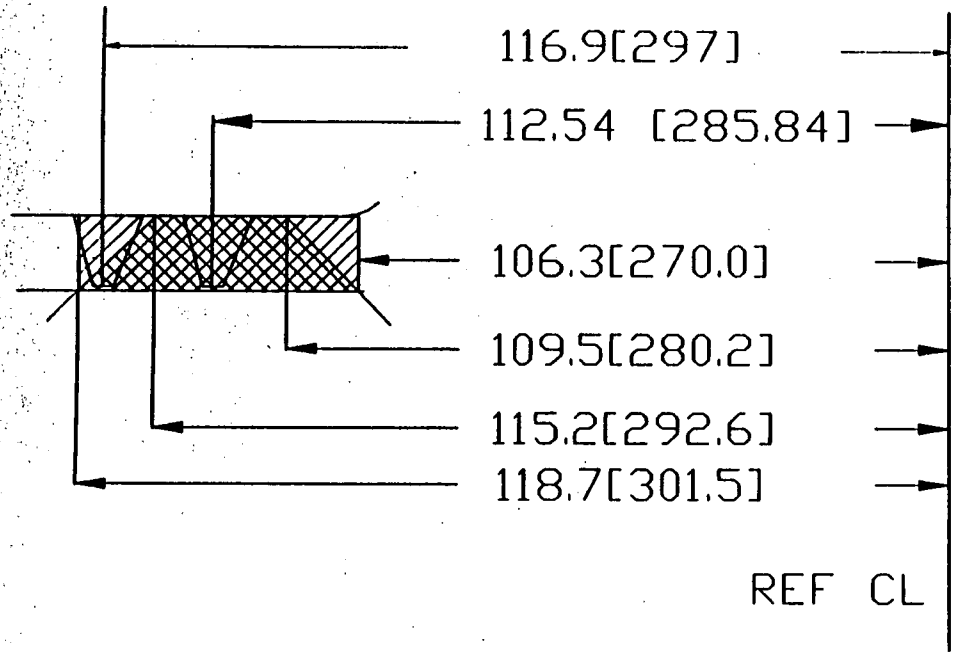

SAFE-END TO NOZZLE INLETS

SCAN I.D.	DIST. AROUND NOZZLE	START *	STOP *	TRANSDUCERS
SENAI+A-1	0 - 360 deg.	270cm	284cm	45deg. +Y +X
SENAI+B-1	0 - 360 deg.	284cm	294.8cm	"
SENIA-B-1	0 - 360 deg.	278cm	295.8cm	45deg. -Y -X
SENIA-B-2	0 - 360 ceg.	295.8cm	301.5cm	"
SENIB+A-1	0 - 360 deg.	270cm	278cm	45deg. +Y +X
SENIB-A-1	0 - 360 deg.	278cm	301.5cm	45deg. -Y -X
SENIC+A-1	0 - 360 deg.	270cm	301.5cm	45deg. +Y +X
SENIC-A-1	0 - 360 deg.	278cm	301.5cm	45deg. -Y -X

OUTLETS

SENCO+A-1	0 - 360 deg.	270cm	295cm	45deg. +Y +X
SENCO-A-1	0 - 360 deg.	278cm	301.5cm	45deg. -Y -X

45 deg L P/C

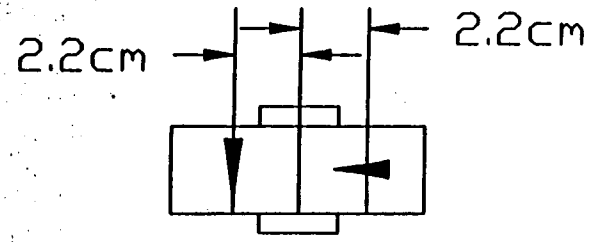

PLUS SCAN DIR.

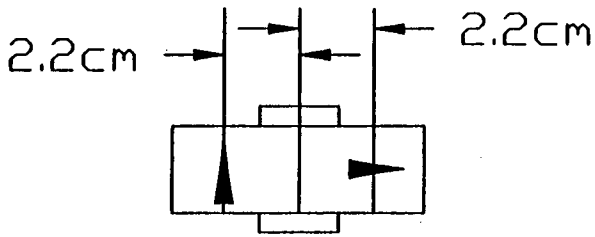

MINUS SCAN DIR.

APPENDIX B

EXAMINATION REFERENCE TABLES

AUT EXAMINATION REFERENCE TABLES, SONGS UNIT 1, 1990

EXAMINATION	SCAN ID	DATA FILE NUMBER	DATA TAPE	CALIBRATION BLOCK **	EXAM DATE	REMARKS
		VESSEL CIRCUMFERENTIAL WELDS				
WELD 1C	1LA+1C+1	SC0009	SOT001	A	8-4-90	
	1LA-1C-1	SC0016	SOT001	A	8-4-90	
	2LA+1C+1	SC0010	SOT001	A	8-4-90	
	2LA-1C-1	SC0015	SOT001	A	8-4-90	
	3LA+1C+1	SC0011	SOT001	A	8-4-90	
	3LA-1C-1	SC0014	SOT001	A	8-4-90	
	1LA-1C-1	SC0016	SOT001	A	8-4-90	
WELD 2C	2C+X-1	SC0095	SOT002	A,B	8-9-90	
	2C+Y-3	SC0107	SOT002	B	8-10-90	
	2C-X-1	SC0096	SOT002	A,B	8-9-90	
	2C-Y-1	SC0108	SOT002	B	8-10-90	
	2CB+1	SC0020	SOT001	A,B	8-4-90	
WELD 3C	3CA-1	SC0028	SOT001	A,B	8-5-90	
	3CB-2	SC0030	SOT001	A,B	8-5-90	
	3CC-1	SC0031	SOT001	A,B	8-5-90	
	3CD-2	SC0033	SOT001	A,B	8-5-90	
	3CE-1	SC0034	SOT001	A,B	8-5-90	
	3CF-1	SC0035	SOT001	A,B	8-5-90	
	3CG+1	SC0036	SOT001	A,B	8-6-90	
	3CA+1	SC0037	SOT001	A,B	8-6-90	
	3CB+1	SC0038	SOT001	A,B	8-6-90	
	3CC+1	SC0039	SOT001	A,B	8-6-90	
	3CD+1	SC0040	SOT001	A,B	8-6-90	
	3CE+1	SC0041	SOT001	A,B	8-6-90	
	3CF+1	SC0042	SOT001	A,B	8-6-90	
WELD 4C	4CA-1	SC0026	SOT001	A,B	8-5-90	
	4CA-2FG	SC0027	SOT001	A	8-5-90	
	4CA+5	SC0025	SOT001	A,B	8-5-90	
WELD 5C	5CTA2	SC0081	SOT002	A	8-8-90	
	5C	SC0001	SOT001	C	8-2-90	
		VESSEL SUPPORTS				
SUPPORT 1S (82.5°)	VSC-1	SC0102	SOT002	A	8-10-90	
SUPPORT 2S (202.5°)	VSA-1	SC0101	SOT002	A	8-10-90	
	VSA-FG2	SC0104	SOT002	A	8-10-90	
SUPPORT 3S (322.5°)	VSB-1	SC0102	SOT002	A	8-10-90	
		VESSEL LONGITUDINAL WELDS				
WELD 1L	1LA+1C+1	SC0009	SOT001	A,B	8-4-90	
	1LA-1C-1	SC0016	SOT001	A,B	8-4-90	
WELD 1L	1LA+1C+1	SC0009	SOT001	A,B	8-4-90	
	1LA-1C-1	SC0016	SOT001	A,B	8-4-90	
WELD 2L	2LA+1C+1	SC0010	SOT001	A,B	8-4-90	
	2LA-1C-1	SC0015	SOT001	A,B	8-4-90	

** CALIBRATION BLOCK IDENTIFICATION CODE:
A = UT-74, B = 444000038, C = ALA-RV-2, D = 444000065, E = CB0005

EXAMINATION	SCAN ID	DATA FILE NUMBER	DATA TAPE	CALIBRATION BLOCK	EXAM DATE	REMARKS
		VESSEL LONGITUDINAL WELDS				
WELD 3L	3LA+1C+1	SC0011	SOT001	A,B	8-4-90	
	3LA-1C-1	SC0014	SOT001	A,B	8-4-90	
WELD 4L	4LA+1	SC0012	SOT001	A,B	8-4-90	
	4LA-1	SC0013	SOT001	A,B	8-4-90	
WELD 5L	5LA+1	SC0007	SOT001	A,B	8-4-90	
	5LA-1	SC0018	SOT001	A,B	8-4-90	
WELD 6L	6LA+1	SC0008	SOT001	A,B	8-4-90	
	6LA-1	SC0017	SOT001	A,B	8-4-90	
WELD 7L	7LA+1	SC0047	SOT001	A,B	8-6-90	
	7LA-1	SC0048	SOT001	A,B	8-6-90	
	7LA-2	SC0049	SOT001	A,B	8-6-90	
WELD 8L	8LA+1	SC0052	SOT001	A,B	8-7-90	
	8LA-1	SC0050	SOT001	A,B	8-6-90	
	8LA-2	SC0051	SOT001	A,B	8-7-90	
WELD 9L	9LA+1	SC0044	SOT001	A,B	8-6-90	
	9LB-1	SC0046	SOT001	A,B	8-6-90	
	9LB-2	SC0053	SOT001	A,B	8-7-90	
WELD 10L	10LA+1	SC0065	SOT001	A,B	8-7-90	
	10LB-1	SC0061	SOT001	A,B	8-7-90	
WELD 11L	11LA+1	SC0054	SOT001	A,B	8-7-90	
	11LA-1	SC0055	SOT001	A,B	8-7-90	
WELD 12L	12LA+1	SC0058	SOT001	A,B	8-7-90	
	12LA+2	SC0097	SOT002	A,B	8-9-90	
	12LA-1	SC0060	SOT001	A,B	8-7-90	
WELD 13L	13LA+1	SC0070	SOT001	A,B	8-7-90	
	13LA-1	SC0069	SOT001	A,B	8-7-90	
WELD 14L	14LA+1	SC0066	SOT001	A,B	8-7-90	
	14LA-1	SC0067	SOT001	A,B	8-7-90	
WELD 15L	15LA+1	SC0071	SOT002	A,B	8-7-90	
	15LA-1	SC0072	SOT002	A,B	8-7-90	
		LOOP A INLET NOZZLE (285°)				
NOZZLE TO VESSEL WELD (FROM SHELL)	LOOPA-IN-1	SC0082	SOT002	A	8-8-90	partial
	LOOPA-IN-2	SC0083	SOT002	A	8-8-90	partial
NOZZLE TO VESSEL WELD (INBORE)	AIBNVIB-1	SC0117	SOT002	A	8-13-90	
	AIBNVIB-2	SC0118	SOT002	A	8-13-90	
NOZZLE INSIDE RADIUS SECTION	IBNSAI+B-1	SC0163	SOT002	B	8-15-90	
	IBNSAI-B-1	SC0164	SOT002	B	8-15-90	
	NIRAI+A-1	SC0166	SOT002	D	8-15-90	
	NIRAI-A-1	SC0165	SOT002	D	8-15-90	
NOZZLE TO SAFE END & SAFE END TO PIPE WELDS	SENAI+A-1	SC0121	SOT002	E	8-13-90	partial SEP
	SENAI+B-1	SC0122	SOT002	E	8-13-90	partial SEP
	SENAI-B-1	SC0123	SOT002	E	8-13-90	partial SEP
	SENAI+B-2	SC0124	SOT002	E	8-13-90	partial SEP

EXAMINATION	SCAN ID	DATA FILE NUMBER	DATA TAPE	CALIBRATION BLOCK	EXAM DATE	REMARKS
		LOOP A OUTLET NOZZLE (240°)				
NOZZLE TO VESSEL WELD (FROM SHELL)	LOOPA-OUT-1	SC0084	SOT002	A	8-8-90	partial
	LOOPA-OUT-2	SC0085	SOT002	A	8-8-90	partial
NOZZLE TO VESSEL WELD (INBORE)	AIBNVOC-1	SC0130	SOT002	A	8-12-90	
	AIBNVOB-2	SC0131	SOT002	A	8-12-90	
NOZZLE INSIDE RADIUS SECTION	IBNSAO+A-1	SC0177	SOT003	B	8-15-90	
	IBNSAO-A-1	SC0178	SOT003	B	8-15-90	
	NIRAO+A-1	SC0176	SOT003	A	8-15-90	
	NIRAO-A-1	SC0175	SOT003	A	8-15-90	
		LOOP B INLET NOZZLE (45°)				
NOZZLE TO VESSEL WELD (FROM SHELL)	LOOPB-IN-1	SC0087	SOT002	A	8-9-90	partial
	LOOPB-IN-2	SC0088	SOT002	A	8-9-90	partial
NOZZLE TO VESSEL WELD (INBORE)	BIBNVIB-1	SC0130	SOT003	A	8-14-90	
	BIBNVIB-2	SC0131	SOT003	A	8-14-90	
NOZZLE INSIDE RADIUS SECTION	IBNSBI+A-1	SC0132	SOT003	B	8-14-90	
	IBNSBI-A-1	SC0133	SOT003	B	8-14-90	
	NIRBI+B-1	SC0162	SOT003	D	8-14-90	
	NIRBI-B-1	SC0160	SOT003	D	8-14-90	
NOZZLE TO SAFE END & SAFE END TO PIPE WELDS	SENBI+A-1	SC0158	SOT003	E	8-15-90	partial SEP
	SENBI-A-1	SC0157	SOT003	E	8-15-90	partial SEP
		LOOP B OUTLET NOZZLE (0°)				
NOZZLE TO VESSEL WELD (FROM SHELL)	LOOPB-OUT-1	SC0086	SOT002	A	8-9-90	partial
	LOOPB-OUT-2	SC0089	SOT002	A	8-9-90	partial
NOZZLE TO VESSEL WELD (INBORE)	BIBNVOB-1	SC0125	SOT003	A	8-13-90	
	BIBNVOB-2	SC0126	SOT003	A	8-13-90	
NOZZLE INSIDE RADIUS SECTION	IBNSBO+A-1	SC0129	SOT003	B	8-13-90	
	IBNSBO-A-1	SC0128	SOT003	B	8-13-90	
	NIRBO+A-1	SC0173	SOT003	A	8-15-90	
	NIRBO-A-1	SC0174	SOT003	A	8-15-90	
		LOOP C INLET NOZZLE (165°)				
NOZZLE TO VESSEL WELD (FROM SHELL)	LOOPC-IN-1	SC0092	SOT002	A	8-9-90	partial
	LOOPC-IN-2	SC0093	SOT002	A	8-9-90	partial
NOZZLE TO VESSEL WELD (INBORE)	CIBNVIA-1	SC0146	SOT003	A	8-14-90	
	CIBNVIA-2	SC0147	SOT003	A	8-14-90	
NOZZLE INSIDE RADIUS SECTION	IBNSCI+B-1	SC0150	SOT003	B	8-15-90	
	IBNSCI-C-1	SC0149	SOT003	B	8-15-90	
	NIRCI+C-1	SC0153	SOT003	D	8-15-90	
	NIRCI-A-1	SC0154	SOT003	D	8-15-90	
NOZZLE TO SAFE END & SAFE END TO PIPE WELDS	SENIC+A-1	SC0155	SOT003	E	8-15-90	partial SEN, SEP
	SENIC-A-1	SC0156	SOT003	E	8-15-90	partial SEP

EXAMINATION	SCAN ID	DATA FILE NUMBER	DATA TAPE	CALIBRATION BLOCK	EXAM DATE	REMARKS
		LOOP C OUTLET NOZZLE (120°)				
NOZZLE TO VESSEL WELD (FROM SHELL)	LOOPC-OUT-1	SC0090	SOT002	A	8-9-90	partial
	LOOPC-OUT-2	SC0091	SOT002	A	8-9-90	partial
NOZZLE TO VESSEL WELD (INBORE)	CIBNVOA-1	SC0134	SOT003	A	8-14-90	
	CIBNVOA-2	SC0135	SOT003	A	8-14-90	
NOZZLE INSIDE RADIUS SECTION	IBNSCO+B-1	SC0140	SOT003	B	8-14-90	
	IBNSCO-C-1	SC0138	SOT003	B	8-14-90	
	NIRCO+A-1	SC0145	SOT003	A	8-14-90	
	NIRCO-D-1	SC0144	SOT003	A	8-14-90	
NOZZLE TO SAFE END & SAFE END TO PIPE WELDS	SENCO+A-1	SC0168	SOT003	E	8-15-90	partial SEP
	SENCO-A-1	SC0167	SOT003	E	8-15-90	partial SEP

MUT, MT, PT & VT EXAMINATION REFERENCE TABLES, SONGS UNIT 1, 1990

EXAMINATION	REPORT NUMBER	EXAM METHOD	EXAMINATION PROCEDURE SO1-XXVII-	EXAM DATE	REMARKS
			LOOP A		
INLET NOZZLE - SAFE END	90-SCE-PT-003	PT	22.5	7-8-90	PARTIAL
INLET SAFE END - PIPE	90-SCE-PT-003	PT	22.5	7-8-90	PARTIAL
OUTLET NOZZLE - SAFE END	90-SCE-PT-003	PT	22.5	7-8-90	PARTIAL
OUTLET SAFE END - PIPE	90-SCE-PT-003	PT	22.5	7-8-90	PARTIAL
			LOOP B		
INLET NOZZLE - SAFE END	90-SCE-PT-2	PT	22.5	7-8-90	PARTIAL
INLET SAFE END - PIPE	90-SCE-PT-2	PT	22.5	7-8-90	PARTIAL, RECORDABLE INDICATION
OUTLET NOZZLE - SAFE END	90-SCE-PT-2	PT	22.5	7-8-90	PARTIAL
OUTLET SAFE END - PIPE	90-SCE-PT-2	PT	22.5	7-8-90	PARTIAL, RECORDABLE INDICATION
			LOOP C		
INLET NOZZLE - SAFE END	90-SCE-PT-1	PT	22.5	7-8-90	PARTIAL
INLET SAFE END - PIPE	90-SCE-PT-1	PT	22.5	7-8-90	PARTIAL
OUTLET NOZZLE - SAFE END	90-SCE-PT-1	PT	22.5	7-8-90	PARTIAL
OUTLET SAFE END - PIPE	90-SCE-PT-1	PT	22.5	7-8-90	PARTIAL
			MAIN STEAM		
REDUCER TO VALVE # CV-76	90=SCE-UT-001	MUT	22.7	7-14-90	
REDUCER TO VALVE # CV-76	90=SCE-UT-002	MUT	22.7	7-14-90	
REDUCER TO VALVE # CV-76	90=SCE-UT-003	MUT	22.7	7-14-90	GEOMETRY
REDUCER TO VALVE # CV-77	90=SCE-UT-001	MUT	22.7	7-14-90	
REDUCER TO VALVE # CV-77	90=SCE-UT-002	MUT	22.7	7-14-90	
REDUCER TO VALVE # CV-77	90=SCE-UT-003	MUT	22.7	7-14-90	GEOMETRY
REDUCER TO VALVE # CV-78	90=SCE-UT-001	MUT	22.7	7-14-90	
REDUCER TO VALVE # CV-78	90=SCE-UT-002	MUT	22.7	7-14-90	
REDUCER TO VALVE # CV-78	90=SCE-UT-003	MUT	22.7	7-14-90	GEOMETRY
REDUCER TO VALVE # CV-79	90=SCE-UT-001	MUT	22.7	7-14-90	
REDUCER TO VALVE # CV-79	90=SCE-UT-002	MUT	22.7	7-14-90	
REDUCER TO VALVE # CV-79	90=SCE-UT-003	MUT	22.7	7-14-90	GEOMETRY
			CLOSURE HEAD		
WELD 6C FROM STUD HOLE	90-SCE-UT-004	MUT	22.6	7-22-90	
#29 TO #42	90-SCE-UT-005	MUT	22.6	7-22-90	PARTIAL
	90-SCE-UT-006	MUT.	22.6	7-22-90	
CRDM WELD #59	90-SCE-UT-007	MUT	22.7	7-23-90	
	90-SCE-UT-008	MUT	22.7	7-22-90	GEOMETRY
	90-SCE-UT-009	MUT	22.7	7-27-90	
RPV STUDS #29 TO #42	90-SCE-UT-010	MUT	22.1	7-30-90	
	90-SCE-MT-002	MT	22.10	7-30-90	
RPV NUTS #29 TO #42	90-SCE-UT-011	MUT	22.1	8-2-90	
	90-SCE-MT-001	MT	22.10	7-29-90	PARTIAL
RPV WASHERS #29 TO #42	90-SCE-VT-007	VT	22.8	8-2-90	
RPV CLOSURE HEAD	90-SCE-VT-013	VT	22.4	8-4-90	TAPE #4

MUT, MT, PT, VT EXAMINATION SUMMARY FOR SONGS UNIT 1, 1990

EXAMINATION	REPORT NUMBER	EXAM METHOD	EXAMINATION PROCEDURE SO1-XXVII-	EXAM DATE	REMARKS
			RPV INTERNALS		
RPV INTERIOR	90-SCE-VT-006	VT	22.4	7-30-90	TAPE #2. includes cladding patches
UPPER GUIDE STRUCTURE ASSEMBLY	90-SCE-VT-003	VT	22.4	7-28-90	TAPE #1
CORE BARREL INTERIOR	90-SCE-VT-006	VT	22.4	7-30-90	TAPE #1
CORE BARREL EXTERIOR	90-SCE-VT-016	VT	22.4	7-30-90	TAPE #2, RECORDABLE INDICATION
	90-SCE-VT-018	VT	22.4	7-30-90	TAPE #3, RECORDABLE INDICATION

APPENDIX C

ROCKWELL'S AUTOMATED ULTRASONIC INSPECTION SYSTEM

A. ROCKWELL'S AUTOMATED ULTRASONIC INSPECTION SYSTEM

Rockwell's automated ultrasonic inspection system is made up of four main parts:

12. 1) The control console
13. 2) The PaR ISI-2 remote manipulator
14. 3) The ultrasonic search units
15. 4) The automated control software

The control console and the positioning device are shown schematically in Figures C-1 and C-2 respectively. Inspection fixtures (or heads) containing several ultrasonic search units are configured for each type of weld inspection. The head is mounted on the PaR positioning device so that it can be remotely guided over the region to be examined. The control software guides the manipulator over the test specimen and collects the ultrasonic data. It alerts the examiner to any possible flaws and records significant data about these possible flaws. The examiner reviews this data and determines the significance of the indications.

1. The Control Console

The control console provides both manual and automated control of the PaR positioning device and the ultrasonic signal system. The control console is connected to the Par manipulator through the mechanical control chassis (MCC). The MCC displays the current position of each of the PaR's six motor drives and allows the operator (or computer) to reposition the PaR as needed. In the manual mode, the operator has full control of the inspection system. This allows the operator to conduct remote manual ultrasonic and visual examinations. Normally, ultrasonic examinations are performed under computer control (automated mode).

Under automated control, the computer uses information input by the console operator to perform several functions. The computer moves the inspection head over the area being examined, takes ultrasonic (UT) data, stores the UT data collected and alerts the operator to any indications that may indicate the presence of a flaw. The automated system is controlled by a Digital Equipment Co. (DEC) PDP-11/34 mini- computer running Rocketdyne developed software. The computer is connected to several subsystems that allow it to perform the required control functions.

The computer is connected to the PaR positioning device through the MCC (mentioned above). The MCC provides the computer with position information on each of the six motor drives. It also allows the computer to move any of the motor drives to a new position when the MCC is in the "automatic" mode. This allows the computer to move the inspection head to the position where it will collect UT data.

The computer uses the Ultrasonic Signal System (UTSS) to acquire data from a particular search unit on the inspection head. Each search unit is connected to its own pulser/receiver module in the UTSS. Each pulser/receiver module contains its own gain control and distance amplitude correction (DAC) circuitry. The computer can elect to acquire data from any one of twelve pulser/receiver modules in the system. During an examination, the computer uses high speed multiplexing to select and acquire data form each search unit. Although up to twelve search units may collect UT data during the examination, only one search unit is active at a time. When selected, the pulser/receiver module pulses the ultrasonic transducer in the search unit and then collects and amplifies the returning UT signal. The UT signal is displayed on an analog UT scope in A–scan form. It is also passed to the analog–to–digital converter, which converts it to digital form and transfers it to the computer.

Once in the computer, the ultrasonic data is analyzed to determine if any of the detected indication amplitudes exceed either of two preset threshold values. These thresholds are set by console operator input during system calibration. All indications with amplitudes exceeding the "data save" threshold (typically 10% of reference) are recorded, along with their associated position and depth information, into a UT data (UTD) file. This file can be transferred to magnetic tape or to optical disk for permanent storage. This low amplitude data may be analyzed at a later date as required. All indications with amplitudes exceeding the "alert" threshold level (typically 20% or 50% of reference) are stored in a summary data (SUM) file along with the associated position and depth information. This summary data file is printed at the conclusion of the scan. These indications are then evaluated for relevancy by a certified level II or III ultrasonic examiner. Indication evaluation is accomplished by manually positioning the inspection head over the response area and reviewing the surface conditions and the ultrasonic signals on the analog display scope.

2. The PaR Positioning Device

Rocketdyne utilizes a Programmed and Remote Systems (PaR) ISI–2 polar manipulator as the positioning device for internal pressure vessel examinations. This manipulator was designed to examine welds in reactor pressure vessels. Its tripod legs rest on the vessel flange and clamp onto the vessel head locating studs. The PaR has six motor drives that provide the necessary positioning to examine all the welds in the reactor pressure vessel, see figure C–3. Optical encoders provide the control console with position information on each of the six motor drives.

Vertical positioning is provided by the "Hoist" telescoping tube assembly. Movement is measured in centimeters from the vessel flange, positive down into the reactor vessel. Azimuthal positioning is provided by the "Boom Rotate" drive. Movement is measured in degrees clockwise (looking down on the vessel) from the vessel zero location.

This drive rotates both of the PaR's inspection booms. The "Boom Extend" drive is a telescoping tube assembly providing radial positioning from the vessel centerline. Movement is measured in centimeters from the vessel centerline. The "Pivot Boom" (or Pivot Arm) drive provides angular positioning at a right angle to the Boom Rotate drive. It is used for bottom head examinations. Movement is measured in degrees from horizontal. The PaR also uses two modular drive units that may be mounted on either inspection boom. The "Fixture Rotate" drive provides rotational positioning perpendicular to the inspection boom. This is used for in-bore nozzle examinations. Its movement is measured in degrees. The second modular drive is the "Fixture Extend" drive. This is a telescoping tube assembly providing radial positioning, typically mounted on the Pivot Boom. Movement is in centimeters measured from the vessel centerline.

The PaR positioning device is very accurate. It is capable of resolving 0.01 degrees of vessel azimuth and 1 millimeter in elevation. Over the distances involved in sizing detected indications, the accuracy of the indication size is estimated to be +/- 1 millimeter in each dimension.

3. Ultrasonic Search Units

Ultrasonic search units are specific to each type of examination performed. Normally several search units are used for each examination to provide the required ASME Code and Regulatory Guide coverage. During the SONGS Unit 1 ISI, various types of search units were used.

The vessel shell welds were examined using 0, 45, 60 and 70 degree UT beams. The zero degree L-wave was a one inch diameter, water path, pulse echo search unit. The 45 and 60 degree angle beams were one inch square, pulse/echo, shear wave search units. The 70 degree angle beam was a one inch square, pitch/catch, longitudinal wave search unit, used for near surface examinations. The flange-to- vessel shell weld was also examined from the flange surface using four, one inch square, refracted L-wave search units (0, 5, 10 and 15 degree).

The vessel supports were examined using a zero degree, water path, one inch diameter, pulse/echo search unit.

The nozzle-to-vessel welds were examined from both the vessel shell surface and from the nozzle inbore surface. The same 0, 45 and 60 degree search units used for examining the shell welds were used to inspect the nozzle-to-vessel welds from the shell surface (transverse reflectors). A contact, one inch square, five degree, refracted L- wave was used to perform the primary examination from the nozzle inbore surface (parallel reflectors). A refracted L-wave was used to orient the UT beam perpendicular to the weld (compensating for the nozzle taper). A one inch square, 45 degree, shear wave search unit was also used from the nozzle inbore surface. The 45 degree beam was used to

supplement the L–wave examination in areas where the L–wave coverage was incomplete, because of nozzle geometry.

The nozzle inside radius was examined using one–half inch diameter, pulse/echo, water path, 60 degree, shear wave search units.

The nozzle inbore near surface (the inner radius section excluding the radius) and the nozzle safe end welds were examined with a water path, pitch/catch, refracted longitudinal wave technique. This technique uses 1/2 inch diameter transducers oriented to produce a 45 degree, longitudinal wave in the part.

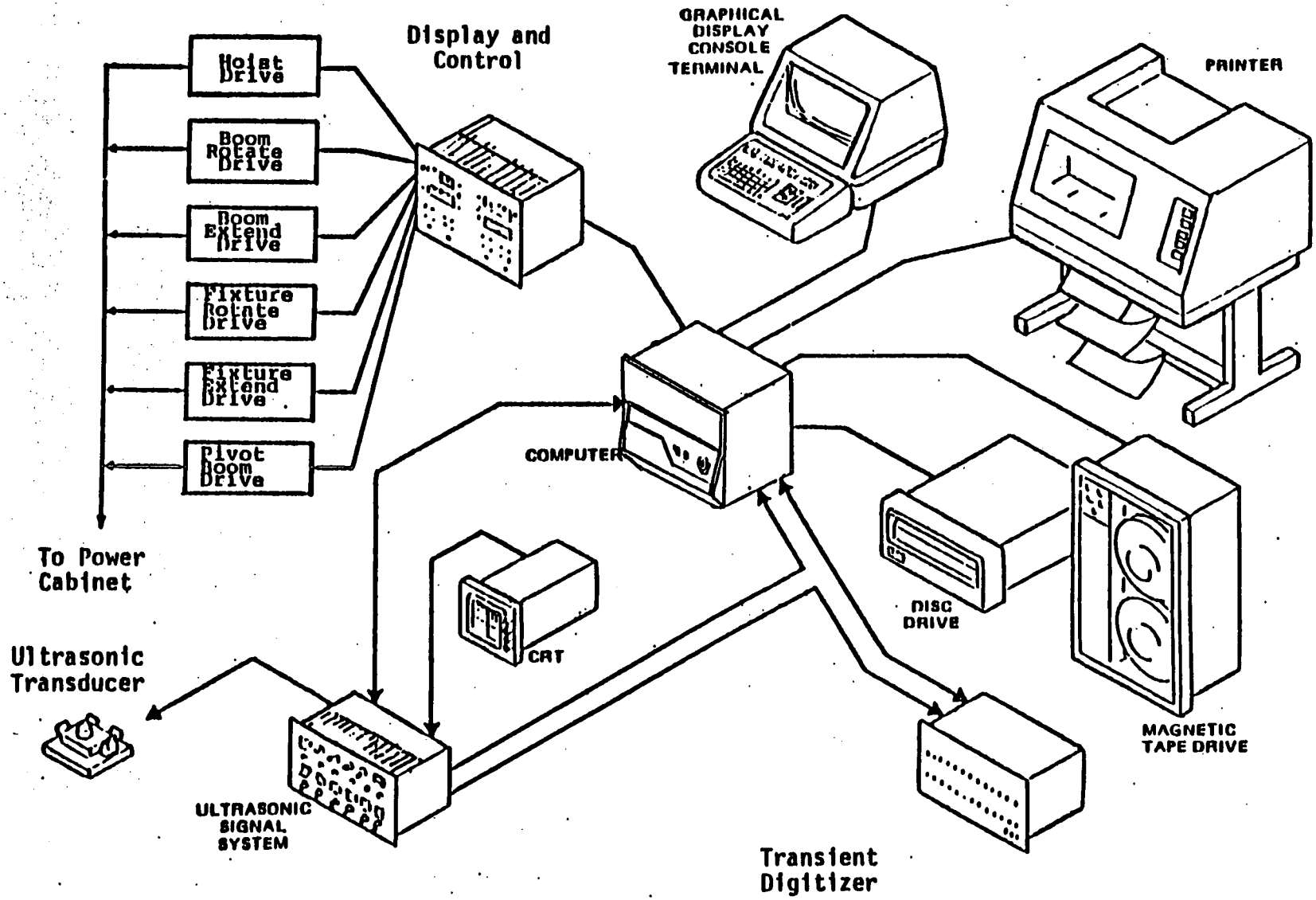

Figure C-1 The ISI system control console.

ROCKETDYNE'S
PaR
MANIPULATOR

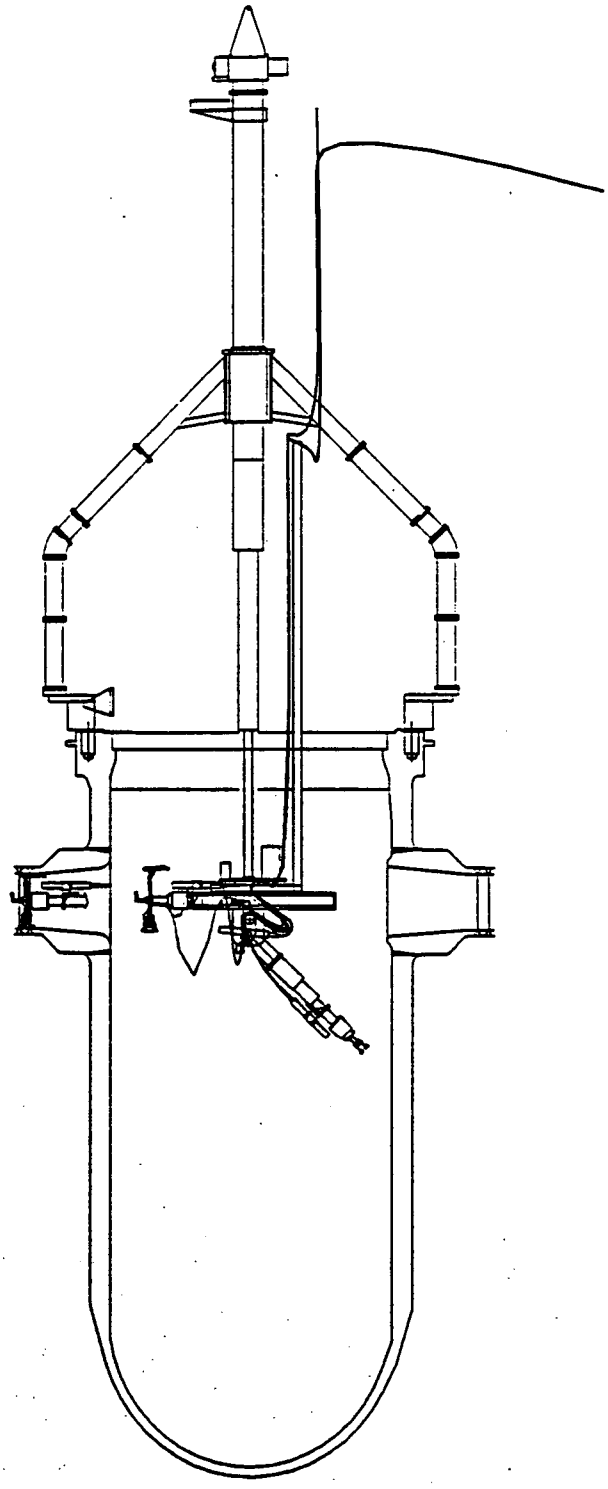

Figure C-2 The Programmed and Remote (PaR) manipulator.

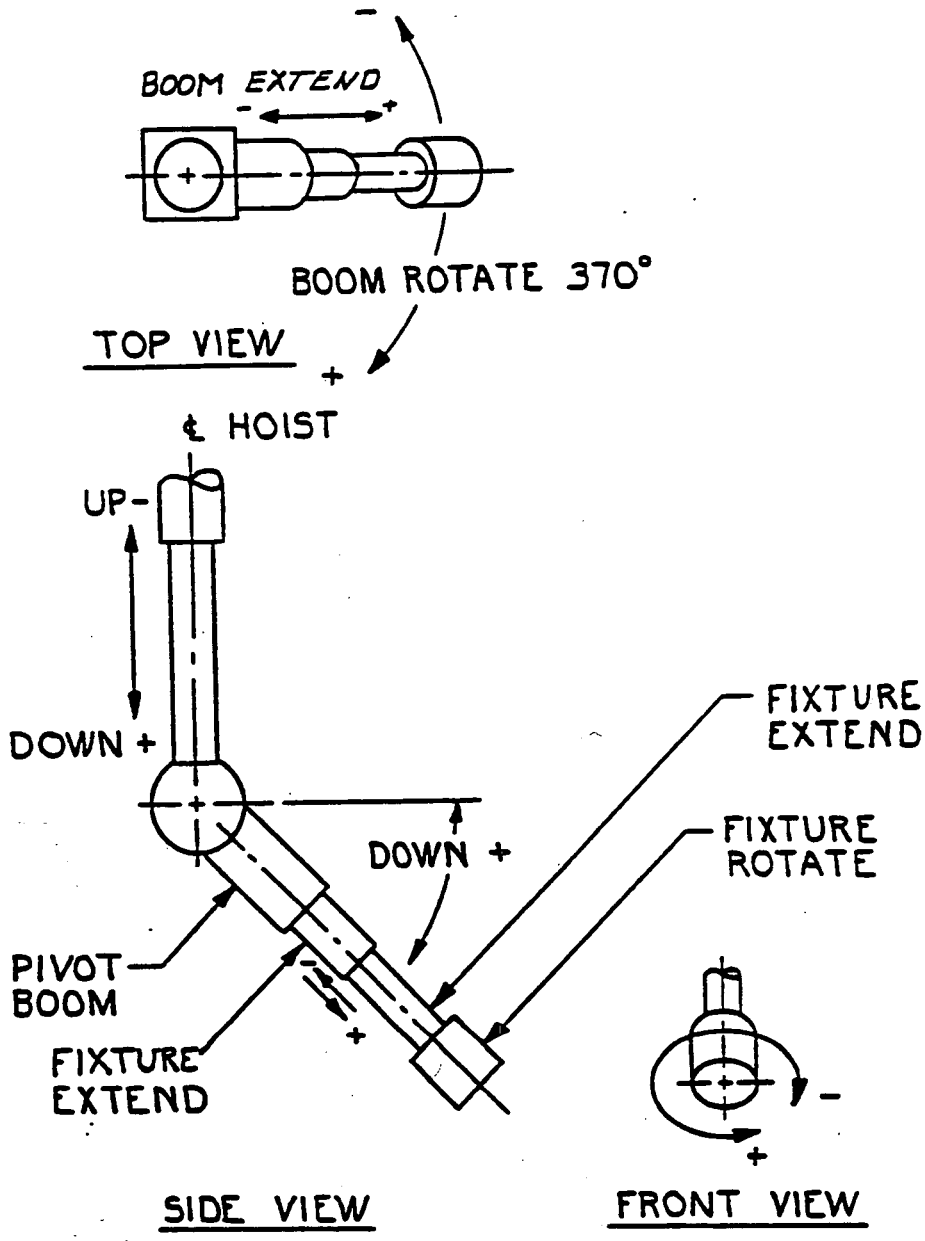

Figure C-3 The PaR's remote positioning device drives.

4. The Control Software and Data Presentation

A topography file is input to the computer for each examination. It defines the scan area, data thresholds, calibration parameters and other required information. This topography is derived using the geometry of the weld, the coverage requirements, recording requirements and obstruction information. A full description of the data contained in the topography is presented in the section 5.1. Several terms from the topography will be used in the following description of how an examination (or scan) is performed.

All of the examinations (except one) are performed using the same basic technique. The inspection head is moved over the examination region along the scanning axis (S or X) from S1 (X1) to S2 (X2) as defined in the topography. Ultrasonic data is collected at intervals defined by DS (DX). At S2 (X2), the inspection head is stepped along the indexing axis (I or Y) a distance DI (DY). No UT data is collected during an index movement. The step sizes DS (DX) and DI (DY) are selected to provide the required transducer crystal overlap for the examination. The inspection head moves back along the scanning axis from S2 (X2) to S1 (X1), again collecting UT data. At S1 (X1), the head is again indexed and the process repeats until the end of the scan is reached, at I2 (Y2).

The examination of the nozzle–to–vessel weld from the vessel shell uses a modified version of the above scanning technique. The same basic scanning and indexing motions are used, but, the inspection head is maneuvered around the nozzle as it moves in both the scan and index directions. A third motor drive (Fixture Rotator) is used to maintain the inspection heads orientation parallel to the weld.

A hard copy record of any suspect indications is printed following each examination. This records the position, search unit, depth and ultrasonic signal amplitude of the suspect indications. A sample of this data format is presented in figure C–4. This data format is not always appropriate for some types of examinations. In these cases, Rocketdyne has the capability to provide a graphical representation of the data that may be used to document the data collected during the examination. An example of a top, side, end view presentation is presented in figure C–5.

The ultrasonic data collection program alerts the examiner to any indication that has an amplitude exceeding the preset values. It does not attempt to determine the relevancy of the indications recorded. That is ultrasonic examiners responsibility.

-S- DEG	-I- CM	TRAN. SYSL	DEPTH CM	POSITION TDC	AMP % REF	ID
029.7	005.0	1-2	006.5	220.0	040.0	000.1
028.6	005.0	1-2	6.4	218.0	033.0	000.2
027.6	005.0	1-2	6.4	216.0	022.0	000.3
011.1	005,0	1-2	4.4	151.0	24.0	000.4

LEGEND

S,I (X,Y)	Inspection head position coordinates in degrees or centimeters.
TRAN SYSL	UT system and pulser/receiver slot number.
DEPTH	Indication depth in centimeters.
POSITION TDC	Indication location in metal path, in units of transient digitizer counts (TDC).
AMP % REF	Indication amplitude, in percent of the calibration level (percent of DAC).
ID	Indication identification number.

Figure C-4. Hard Copy Data Format

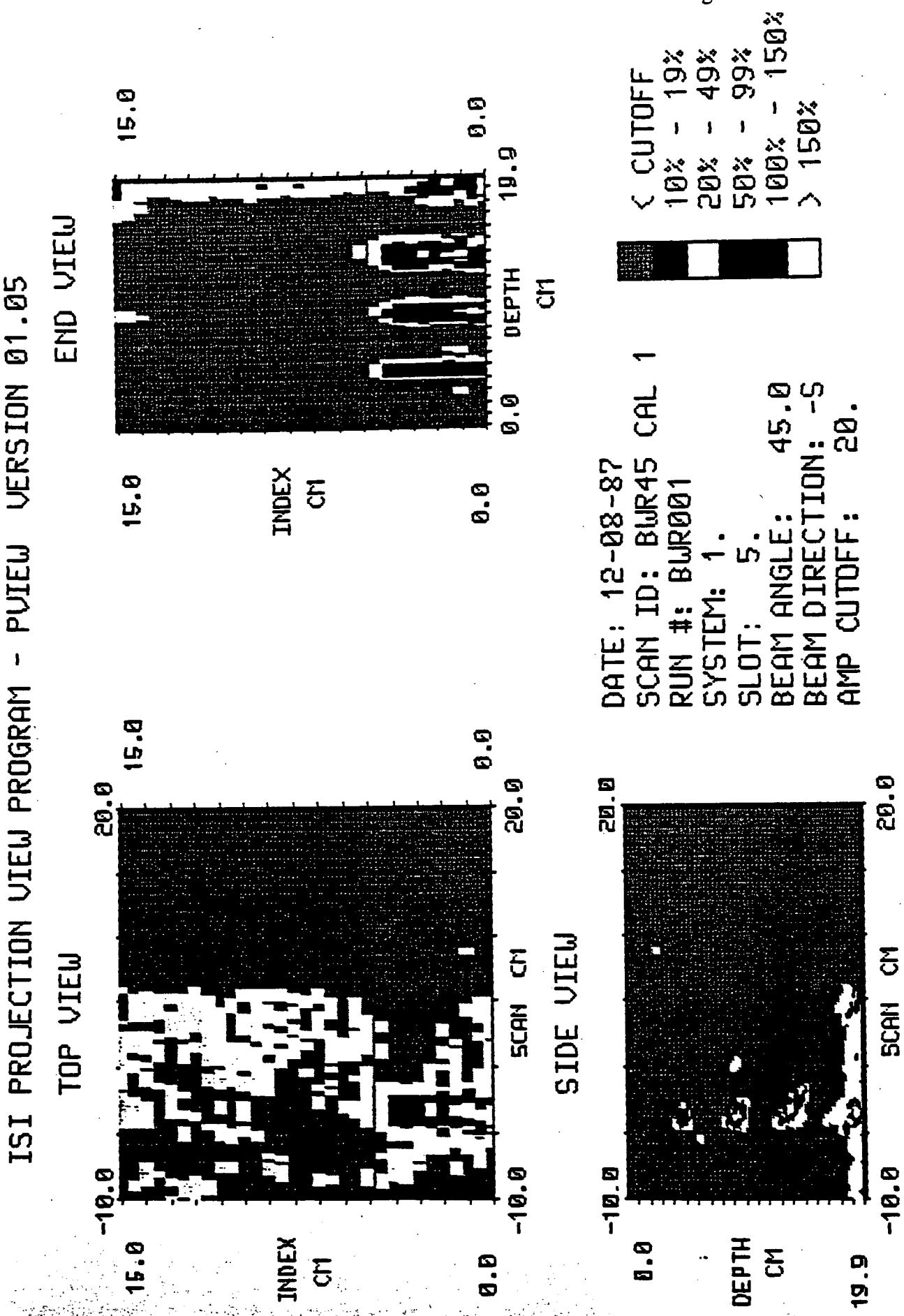

Figure C-5 Rocketdyne's three view data representation.

5.1 The Topography Data File Parameters

A weld topography data file provides weld geometry and calibration information to the Rockwell Inservice Inspection (ISI) ultrasonic examination programs. This data set contains the calibration information for up to twelve individual search units at one time. There are up to 29 lines of data defined in the topography data file. Only active calibrations are displayed for lines 6 through 29. A sample topography is presented in figure C–6. It contains the following information:

LINE 1

Item 1: The scan S (X) direction, head offset. This offsetmay be in degrees or centimeters and is always positive.If only one inspection head is used, set equal to zero.

Item 2: The index I (Y) direction, head offset. This offsetmay be in degrees or centimeters and is always positive.If only one inspection head is used, set equal to zero.

LINE 2

Item 1: DS (or DX): Scan step size, in degrees or centimeters.This defines the maximum allowable distance betweensuccessive pulsing of the UT transducers that willmeet inspection code overlap requirements.

Item 2: DI (or DY): Index step size, in degrees or centimeters.

Item 3: TYPE: This parameter defines the type of inspectionis to be conducted. This is always one for BWRinspections. For PWR examinations, the TYPE numberdepends on the motor drives to be used for theexamination. For PWR NV examinations the TYPE isalways equal to six.

Item 4: SSL: The longitudinal wave speed of sound in the partin meters/(second*10).

Item 5: SSS: The shear wave speed of sound in the part inmeters/(second*10).

LINE 3

Item 1: THRESH: Data save threshold (in percent of reference).

Item 2: SUM#: The number of A–scans to average during datacollection (1,2,4,8,16 or 32).

Item 3: SAMP: The A/D converter sample interval (in usec).

			X	Y		
01	HEAD OFFSETS		000.0	000.0		
	DX	DY	TYPE	SSL	SSS	
02	001.0	001.0	001.0	585.0	323.0	
	THRESH	SUM#	SAMP			
03	010.0	001.0	000.5			
			-X1-	-Y1-	-X2-	-Y2-
04	WELD PARAMETERS		000.0	000.0	050.0	050.0
05	HEAD TRAVEL AREA		000.0	000.0	050.0	050.0

TRANSDUCER DEFINITION:

	-1- SYS	-2- SLT	-3- S/N	-4- OX	-5- OY	-6- S/L	-7- ANG	-8- DIR	-9- O-DAC	-10- C-DAC	-11- DELAY	-12- IW	-13- DPN
06	1	2	01	000.0	000.0	L	00		+16	118	104.8	245.0	001
07	1	5	02	002.0	000.0	S	45	+S	+12	122	150.0	400.0	002
08	1	6	03	-007.6	000.0	S*	60	+S	+05	120	150.0	440.0	003

	SYS	SLT	-14- FFD	-15- CVF	-16- RG1	-17- LO1	-18- HI1	-19- RG2	-20- LO2	-21- H12	-22- BSEND
18	1	2	040.0	017.7	000.0	000.0	000.0	000.0	000.0	000.0	000.0
19	1	5	085.0	018.3	200.0	020.0	030.0	300.0	020.0	040.0	000.0
20	1	6	111.0	016.5	000.0	000.0	000.0	250.0	040.0	080.0	000.0

Figure C-6 Display Format of the Topography Data File

LINE 4

Line 4 contains the WELD PARAMETERS. These parameters describe the rectangular area to be examined:

ITEM	NAME	DESCRIPTION
1	S1 (or X1)	Start of exam zone, scan direction
2	I1 (or Y1)	Start of exam zone, index direction
3	S2 (or X2)	End of exam zone, scan direction
4	I2 (or Y2)	End of exam zone, index direction

LINE 5

Line 5 holds the HEAD TRAVEL PARAMETERS. These parametersspecify the rectangular region the inspection head will moveover. This region is usually larger than the area described by theweld parameters in order to accommodate angle beam examinations.

ITEM	NAME	DESCRIPTION
1	S1 (or X1)	Start coordinate, scan direction
2	I1 (or Y1)	Start coordinate, index direction
3	S2 (or X2)	End coordinate, scan direction
4	I2 (or Y2)	End coordinate, index direction

LINES 6 THROUGH 29

The remaining lines of the topography data set contain search unit calibration data. Twenty two data items make up the transducer definition field for each search unit (transducer):

ITEM	NAME	DESCRIPTION
1	SYS	UT system number, either 1 or 2.
2	SLT	Slot number of pulser/receiver in UT signal chassis (either 1,2,3,4,5, or 6).
3	S/N	DAC/pulser/receiver serial number.
4	OS (OX)	Offset of transducer relative to zero reference point measured in the scan direction.
5	OI (OY)	Offset of transducer relative to zero reference point measured in the index direction.

ITEM	NAME	DESCRIPTION
6	S/L	Ultrasonic wave type, either S, L, or P (S for shear wave, L for laminar L-wave, P for planar L-wave). A "*" or "1" through "6" may also be present following the S or L. This selects a pitch/catch examination. If "*" is used, the pulsing channel is SLT + 1. If 1 - 6 is specified, the pulsing channel is the slot specified.
7	ANG	This is the angle of the UT beam from normal, in degrees.
8	DIR	UT beam direction for the search unit. It must be +/- S (X) or +/- I (Y) for angle beam search units. It must be blank (two spaces) for straight beam search units.
9	O-DAC	ADC value corresponding to 0% screen height on the analog UT display scope.
10	C-DAC	ADC value corresponding to 50% screen height on the analog UT display scope.
11	DELAY	The time from the main sync pulse to the start of data collection in units of TDC.
12	IW	The time from the main sync pulse to the end of data collection in units of TDC.
13	DPN	DAC calibration data page number.
14	FFD	The time from the main sync pulse to the front surface reflection in TDC.
15	CVF	Metal path conversion factor in TDC per centimeter.
16	RG1	Time to the end of the first variable recording gate in TDC.
17	LO1	Alert value in ADC (in percent of DAC) for RG1.
18	HI1	Alarm value in ADC (in percent of DAC) for RG1.
19	RG2	Time to the end of the second variablerecording gate in TDC.
20	LO2	Alert value in ADC (in percent of DAC) for RG2.
21	HI2	Alarm value in ADC (in percent of DAC) for RG2.
22	BSEND	Time to the trailing edge of the back surfaceUT signal. Used to detect loss of the backsurface signal in L-wave examinations.

1372-A/10-84

EBASCO SERVICES INCORPORATED
QUALITY ASSURANCE ENGINEERING
INSERVICE INSPECTION

LIQUID PENETRANT EXAMINATION REPORT

PROJECT	PROCEDURE *	REVISION
SAN ONOFRE UNIT #1	SCE-PT-S75-1	1

COMPONENT OR SYSTEM	TEMP
"B" LOOP - INLET + OUTLET - NOZZLE TO SAFE END / SAFE END TO PIPE (THERMOMETER S/N - 2046)	88°F

REACTOR COOLANT

	MANUFACTURER	TYPE	BATCH NO.
Penetrant	MAGNAFLUX	SKL-HF/S	89K01K
Cleaner	MAGNAFLUX	SKC-NF	89L01P
Developer	MAGNAFLUX	SKD-NF	89L05P

COMPONENT / WELD	INDICATION NONE	INDICATION LENGTH (INCH)	LOCATION OF INDICATION (Use Sketch Sheet if Necessary)	REMARKS
INLET NOZZLE TO SAFE END	X	N/A	N/A	**
OUTLET NOZZLE TO SAFE END	X	N/A	N/A	**
INLET SAFE END TO PIPE	N/A	5/32" ROUND 3/32" ROUND	SEE SKETCH	SEE ATTACHED SKETCH FOR LIMITATIONS + LOCATIONS
OUTLET SAFE END TO PIPE	N/A	1/8" ROUND 1/8" ROUND	SEE SKETCH	SEE ATTACHED SKETCH FOR LIMITATIONS + LOCATIONS

** NOZZLE TO SAFE END WELDS WERE NOT VISUALLY VERIFYABLE - SO ENTIRE ACCESSIBLE AREA WAS ~~EXAMIND~~ 7-8-90 EXAMINED - FOR THESE AREAS SEE ATTACHED SKETCHES.

SEE ATTACHED EVALUATION SHEET

[illegible] SCE Level III 10-2-90
[illegible] ANII 11/28/90

~~Reviewed for SCE by [illegible] Level III 7/12/90~~ 8/6/90

EXAMINER	LEVEL	DATE
Steve Spindler	II	7-8-90
EXAMINER N/A	LEVEL N/A	DATE N/A
REVIEWED BY W. R. Johnson 7-9-90 QA ROCKWELL	REPORT NO. 90-SCE-PT-2	DATE 7-9-90

*501-XXVII-22.5 REV. 0 LEVEL III

90-SCE-PT-2

6059/4-76

EBASCO SERVICES INCORPORATED
QUALITY ASSURANCE ENGINEERING

INSERVICE INSPECTION SKETCH SHEET

"B" LOOP - INLET
SAFE END TO PIPE
LINE AND WELD(S) NOZZLE TO SAFE END

DATE 7-8-90

EXAMINER Steve Spindler LII

PROJECT SAN ONOFRE / UNIT #1

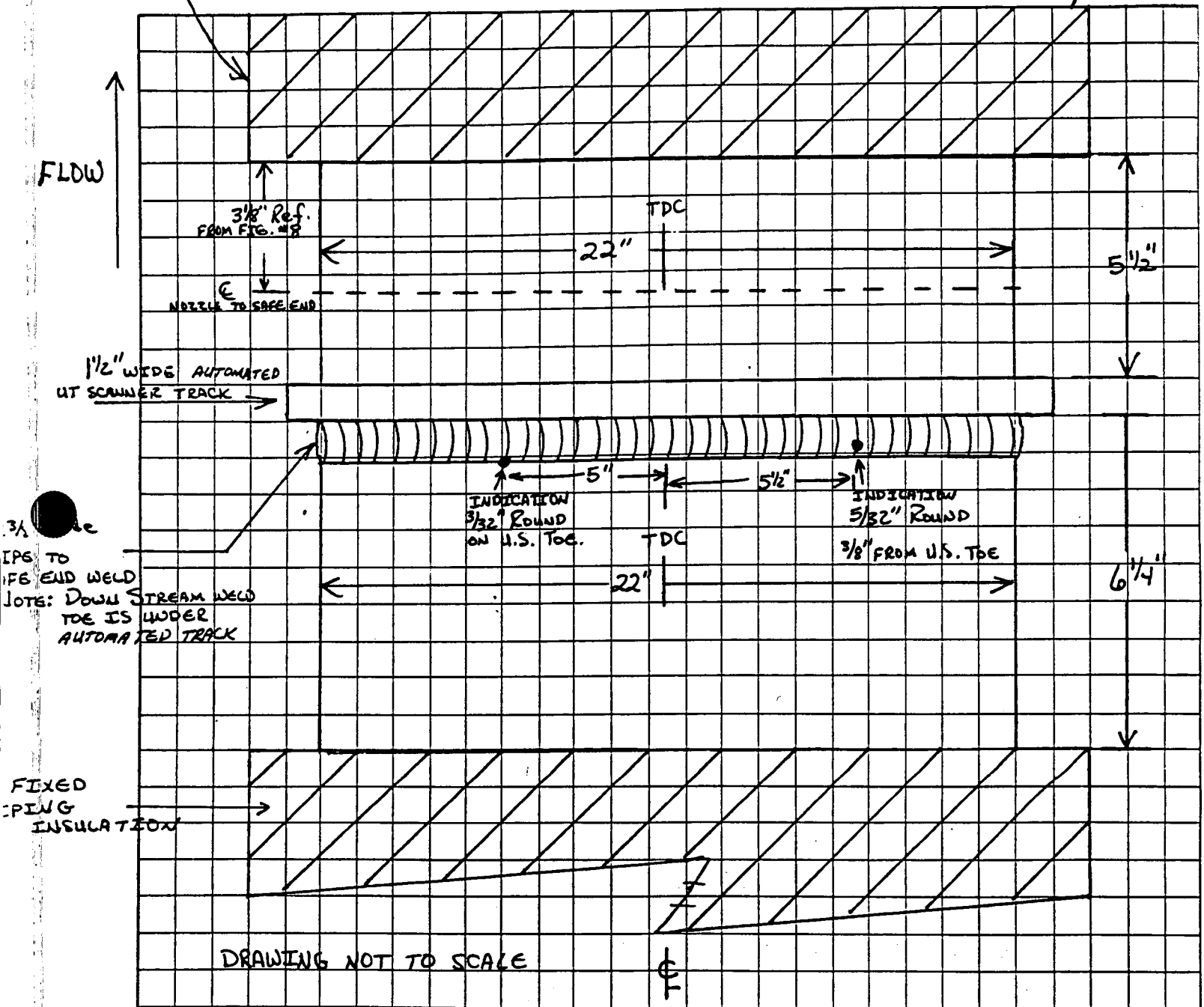

FOR ADDITIONAL DIMENSIONS SEE ATTACHED SCE FIGURE #8. ACCEPTABLE PER SPEED LETTER DATED 7-8-90 FOR REFERENCE BY ROBERT DELONG, SCE, ISI ENGINEER.

NOZZLE TO SAFE END WELD NOT VISUALLY VERIFIABLE
EXAMINED 11" EACH SIDE OF TOP DEAD CENTER
ENTIRE AREA FROM NOZZLE INSULATION TO PIPE INSULATION - 11" CW TO 11" CCW FROM TDC WAS EXAMINED - EXCEPT FOR AREA UNDER UT TRACKS

6059/4-76

EBASCO SERVICES INCORPORATED
QUALITY ASSURANCE ENGINEERING

INSERVICE INSPECTION SKETCH SHEET

"B" LOOP - OUTLET NOZZLE TO SAFE END

LINE AND WELD(S) SAFE END TO PIPE

DATE 7-8-90

EXAMINER Steve Spindler L II

PROJECT SAN ONOFRE - UNIT #1

"B" OUTLET NOZZLE

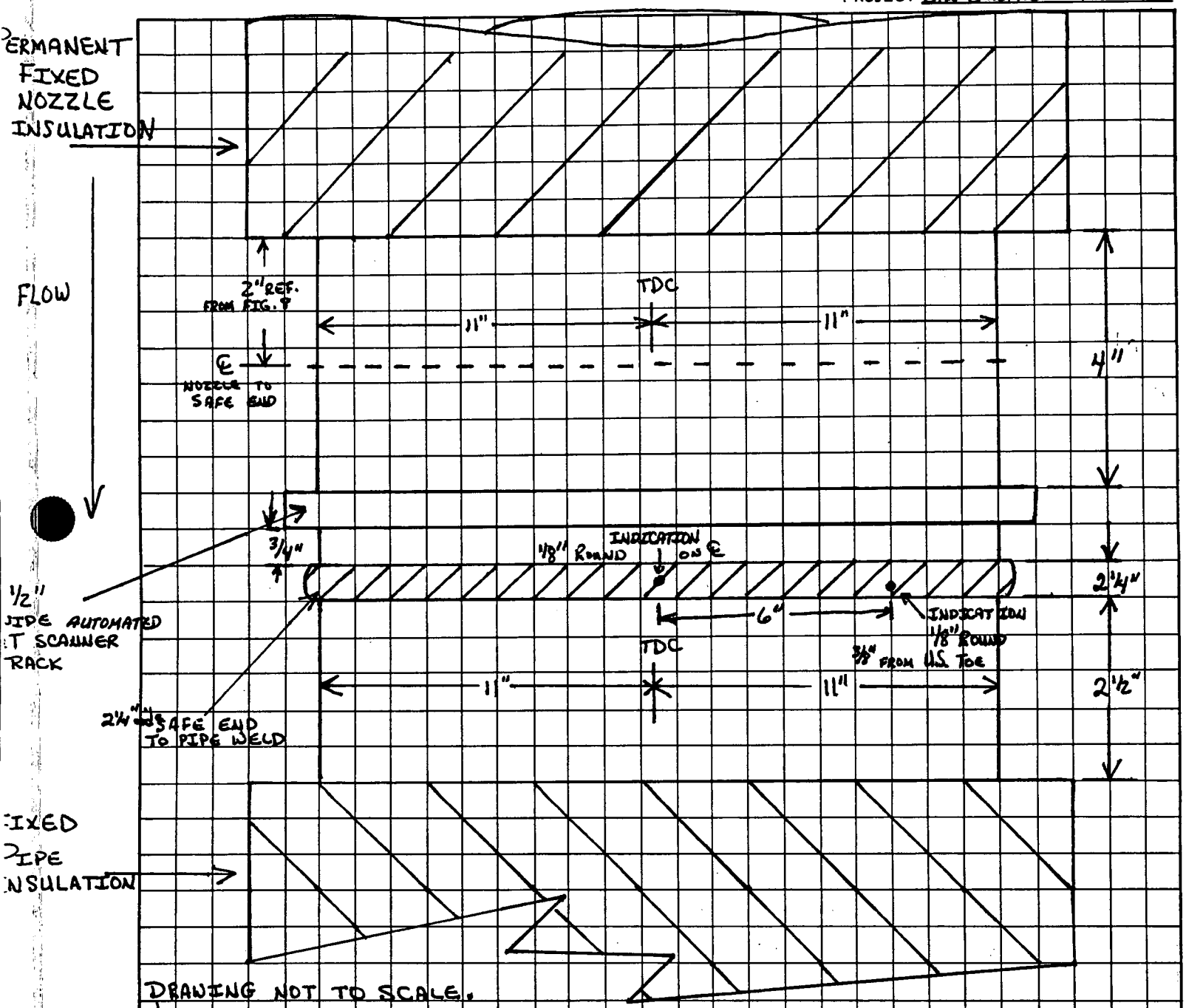

DRAWING NOT TO SCALE.

NOZZLE TO SAFE END WELD NOT VISUALLY VERIFIABLE

℄ PIPE TOP DEAD CENTER

FOR ADDITIONAL DIMENSIONS SEE ATTACHED SCE FIGURE #8. ACCEPTABLE PER SPEED LETTER DATED 7-9-90 FOR REFERENCE BY ROBERT DELONG - SCE - ISI - ENGINEER.

ENTIRE AREA FROM NOZZLE INSULATION TO PIPE INSULATION - FROM 11" CW TO 11" CCW FROM TOP DEAD CENTER WAS EXAMINED EXCEPT FOR AREA UNDER UT TRACKS.

EXAMINED 11" EACH SIDE OF TOP DEAD CENTER

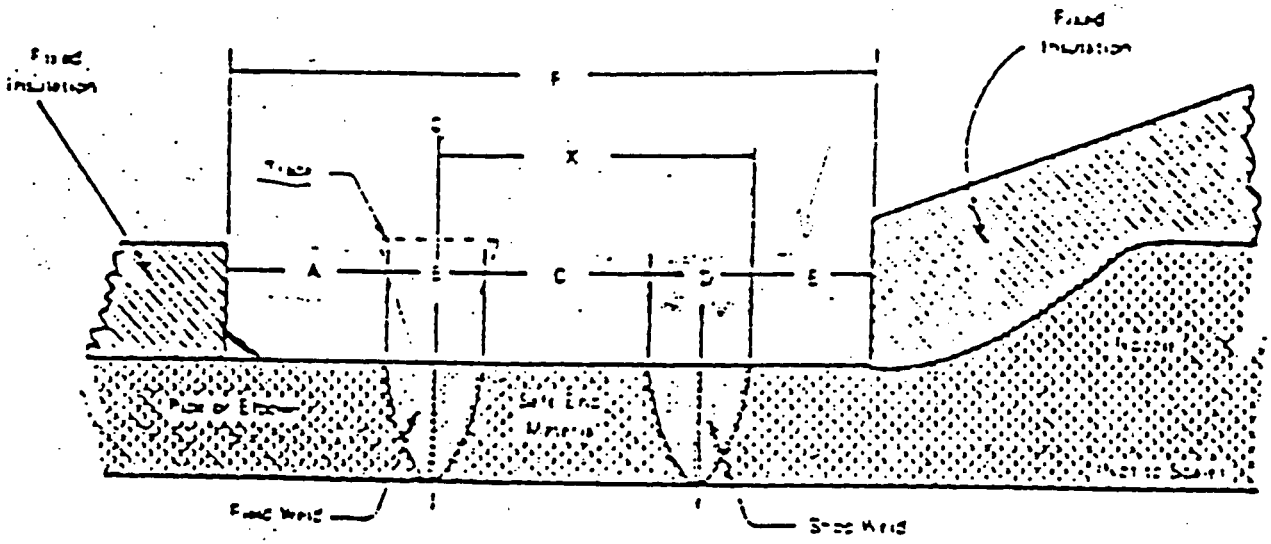

Reactor Vessel Nozzle Identification	Dimensions (inches)						
	A	B	C	D	E	F	X*
A—Outlet (Hot Leg)	2	2	3	1-1/2	2	10-1/2	4
A—Inlet (Cold Leg)	2-1/2	1-1/2	2-1/2	2	1-3/4	10-1/4	5-3/4
B—Outlet (Hot Leg)	1-3/4	2	3-3/4	2	1	9-1/2	4
B—Inlet (Cold Leg)	1	2	2-1/2	2-1/4	2	9-3/4	4-1/4
C—Outlet (Hot Leg)	1	2	3	2	1	9	4-1/8
C—Inlet (Cold Leg)	2-1/4	2	2-5/8	1-7/8	1-1/2	10-1/4	5-1/2

*X is the distance from the track centerline to the edge of the nozzle. The centerline track over the nozzle has 48 in. inboard of the face and of the centerline.

FIGURE 8. TRACK AND WELD LOCATIONS ON THE SIX INLET AND OUTLET REACTOR VESSEL NOZZLES

INSERVICE INSPECTION PROGRAM IMPLEMENTATION

Page 1 of 1
Date 10/1/90

Unit 1

INDICATION EVALUATION SHEET

Examination Data Sheet Number 90-SCE-PT-2
Page Number 1
System Description REACTOR COOLANT
Examination Item Number
"B" LOOP INLET OUTLET NOZZLE TO SAFE END/SAFE END TO PIPE.

A. INDICATION DIMENSIONS (from scan data sheets)

1. Indication Length (inches): (1) 1@ 5/32" (2) 1@ 3/32" (3) 2@ 1/8"
2. Indication Depth (through-wall): N/A
3. Separation from Component Surface: N/A
4. Component Wall Thickness (measured): 2½"

B. Calculations of Code Dimensions

1. Dimension "l" (from A1(above)):
2. Dimension "a" (from A1(above)):
3. Dimension "s" (from A3(above)):
4. Dimension "t" (from A4(above)): N/A
5. "s/a": if > 0.4 then a = 2a
6. "a/l":
7. "a/t%":

C. Evaluation of Indication

Indications evaluated as acceptable IAW S01-XXVII-22.5 Para 15.4.2. Acceptance criteria extracted from ASME III 74 ed. S75 add. NB 5352 as directed by SEC IWA 3100 of SEC XI 74 ed. S75 add. for acceptance criteria in the course of preparation.

Original Examination Data Sheet Number Date

NCR Issued: N/A NCR Number N/A Date N/A

PERFORMED BY: R L Long 10/2/90 / Gerald A Schmidt 10·2·90 / Brian Hamm 10.2.90
ISI Engineer/SCE Level III / Date

REVIEWED BY: C. R. Brandt / 11/28/90
SCE QA Engineer / Date
Ed Thompson ANII 11/26/90

1372-A/10-84

EBASCO SERVICES INCORPORATED
QUALITY ASSURANCE ENGINEERING
INSERVICE INSPECTION

LIQUID PENETRANT EXAMINATION REPORT

PROJECT	PROCEDURE	REVISION
San Onofre Unit #1 Reactor Coolant	SCE-PT-575-1*	1

COMPONENT OR SYSTEM	TEMP
'A' Loop - Inlet + Outlet - Nozzle to Safe End/Safe End To Pipe (Temp Gauge #2046)	88°F

	MANUFACTURER		TYPE	BATCH NO.
Penetrant	Magnaflux	10 min	SKL-HF-S	89K01K
Cleaner	Magnaflux	5 min	SKC-NF	89L01P
Developer	Magnaflux	7 min	SKD-NF	89L05P

COMPONENT / WELD	INDICATION NONE	INDICATION LENGTH (INCH)	LOCATION OF INDICATION (Use Sketch Sheet if Necessary)	REMARKS
'A' Outlet	X	N/A	N/A	See Sketch
Safe End to Nozzle Weld	X			For Limitations
Safe End to Pipe Weld	X			
'A' Inlet	X			
Safe End to Nozzle Weld	X			
Safe End to Pipe Weld	X			

N/A

Reviewed for SCE by RO Schmidt Level III 7/12/90

EXAMINER	LEVEL	DATE
[signature]	II	7-8-90
EXAMINER	LEVEL	DATE
[signature]	I	7-8-90
REVIEWED BY	REPORT NO.	DATE
W. J. Johnson Rockwell QA Level III	90-SCE-PT-003	7-9-90

* SOI-XXVII-22.5 Rev. 0

[signature] ANII 11/28/90

6059/4-76

EBASCO SERVICES INCORPORATED
QUALITY ASSURANCE ENGINEERING

2 of 4
90-SCE-PT-3

For Additional Measurements See Attached Drawing, Approved By Speed Letter Generated 78-90 From SCE Personnell.

INSERVICE INSPECTION SKETCH SHEET

LINE AND WELD(S) 'A' Inlet
DATE 78-90
EXAMINER [illegible]
PROJECT Songs Unit #1

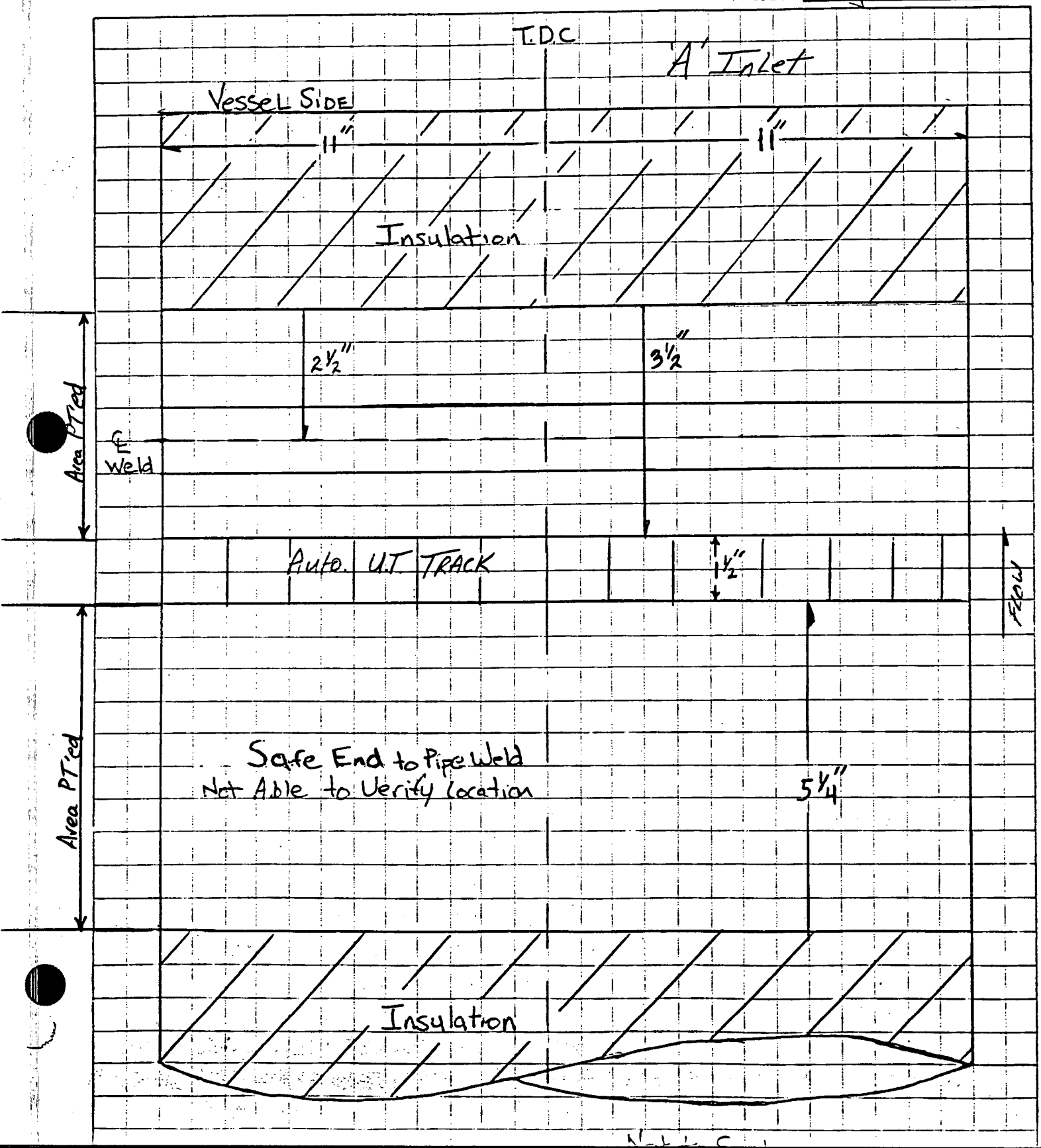

6059/4-76

EBASCO SERVICES INCORPORATED
QUALITY ASSURANCE ENGINEERING

INSERVICE INSPECTION SKETCH SHEET

For Additional Measurements See Attached Drawing, Approved By Speed Letter Generated 7-8-90 From SCE Personnell.

LINE AND WELD(S): 'A' Outlet
DATE: 7-8-90
EXAMINER: TS
PROJECT: Songs Unit #1

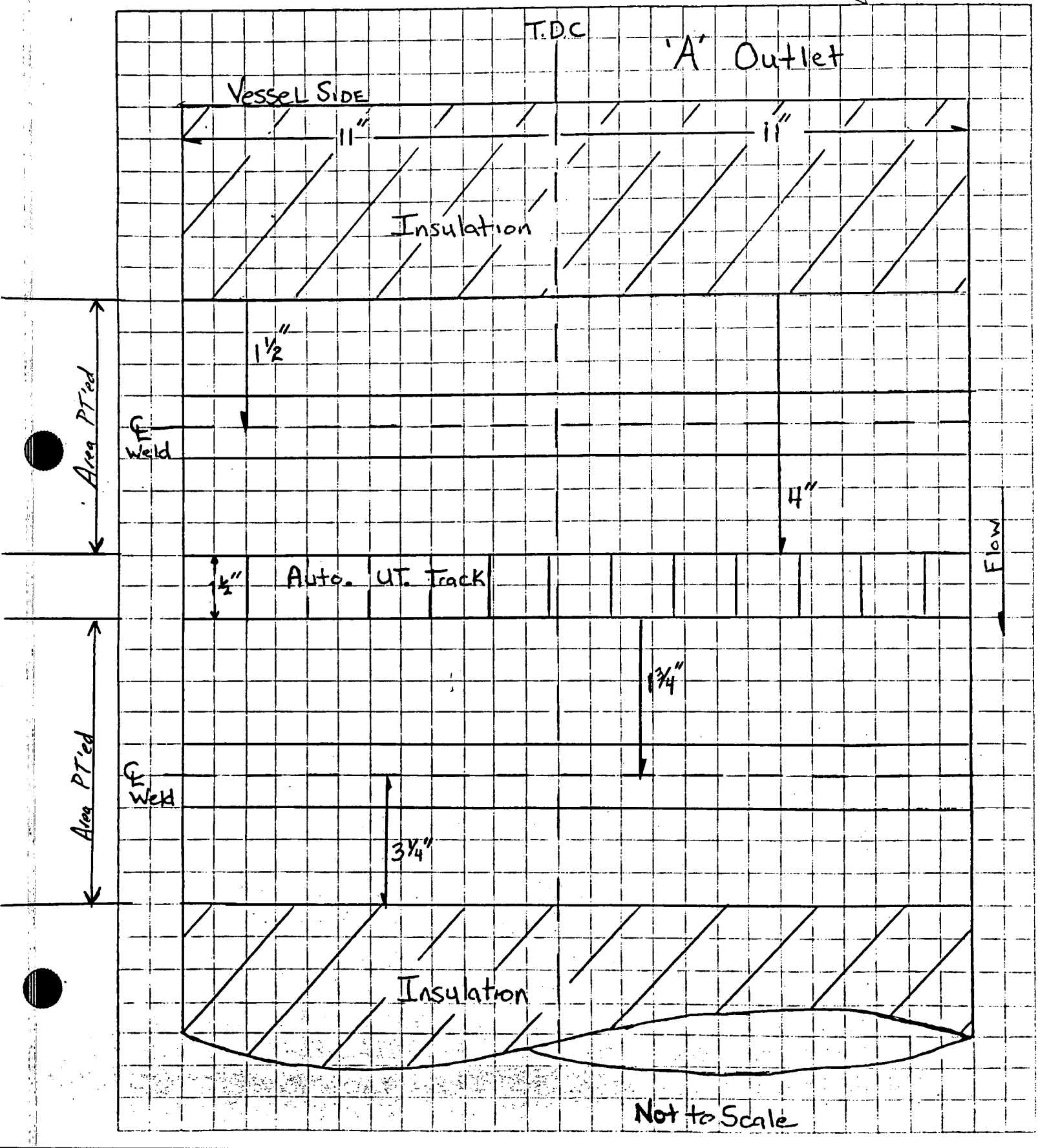

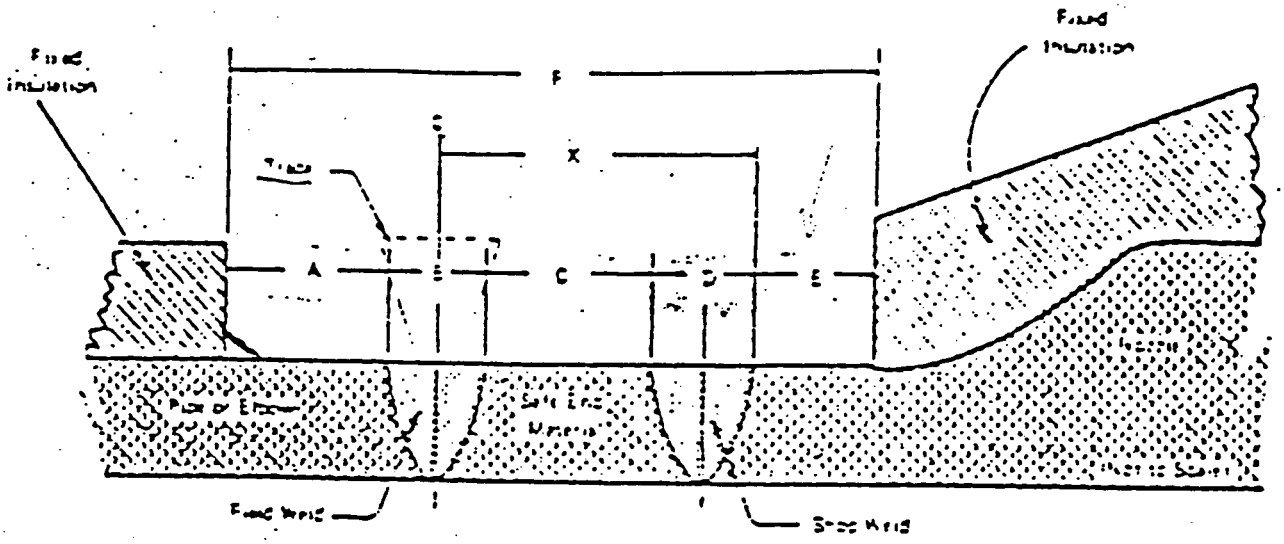

Reactor Vessel Nozzle Identification	Dimension (inches)						
	A	B	C	D	E	F	X*
A—Outlet (Hot Leg)	2	2	3	1-1/2	2	10-1/2	4
A—Inlet (Cold Leg)	2-1/2	1-1/2	2-1/2	2	1-3/4	10-1/4	5-3/4
B—Outlet (Hot Leg)	1-3/4	2	2-3/4	2	1	5-1/2	4
B—Inlet (Cold Leg)	1	2	2-1/2	2-1/4	2	5-3/4	4-1/4
C—Outlet (Hot Leg)	1	2	3	2	1	9	4-1/2
C—Inlet (Cold Leg)	2-1/4	2	2-5/8	1-7/8	1-1/2	10-1/4	5-1/2

*X is the distance from the track centerline to the side of the nozzle. The arithmetic mean of the nozzle four (4) dimensions of the hot side of the centerline.

FIGURE 8. TRACK AND WELD LOCATIONS ON THE SIX INLET AND OUTLET REACTOR VESSEL NOZZLES

1372-A/10-84

EBASCO SERVICES INCORPORATED
QUALITY ASSURANCE ENGINEERING
INSERVICE INSPECTION

LIQUID PENETRANT EXAMINATION REPORT

PROJECT	PROCEDURE	REVISION
San Onofre Unit #1	SCE-PT-575-1*	1

COMPONENT OR SYSTEM	TEMP
Reactor Coolant Loop "C" Inlet and Outlet Temp Gauge #2046	88°F

	MANUFACTURER		TYPE	BATCH NO.
Penetrant	Magnaflux	10 min	SKL-HF-S	89K01K
Cleaner	Magnaflux	5 min	SKC-NF	89L01P
Developer	Magnaflux	7 min	SKD-NF	89L05P

COMPONENT / WELD	INDICATION NONE	INDICATION LENGTH (INCH)	LOCATION OF INDICATION (Use Sketch Sheet if Necessary)	REMARKS
Inlet Nozzle to Safe End	✓	N/A	N/A	** (SEE ATTACHED
Outlet Nozzle to Safe End	↓	↓	↓	↓
Inlet Safend to pipe	↓	↓	↓	↓
Outlet Safend to pipe	↓	↓	↓	↓
			N A	

Reviewed for SCE GO Schmidt Level III 7/12/90

EXAMINER	LEVEL	DATE
M. Orid Jr.	II	7/8/90
N/A	N/A	N/A

REVIEWED BY	REPORT NO.	DATE
N. J. Johnson Rockwell QA Level III	90-SCE-PT-1	7-9-90

* SOI XXVII-22.5, Rev. 0

6059/4-76

EBASCO SERVICES INCORPORATED
QUALITY ASSURANCE ENGINEERING

90-SCE-PT-1

INSERVICE INSPECTION SKETCH SHEET

LINE AND WELD(S) _____

DATE 7/8/90

EXAMINER M. ORIHUELA, JR.

PROJECT SONGS-1

** DUE TO RESTRICTED PHYSICAL ACCESS TO THE LOOP C INLET AND OUTLET NOZZLES, ONLY 22" (CIRCUMFERENTIAL DISTANCE) WERE EXAMINED; 0 TO 11" CW AND 0 TO 11" CCW. TWO WELDS WERE EXAMINED WHERE ACCESSIBLE: NOZZLE-TO-SAFE END AND SAFEEND-TO-PIPE (SEE ATTACHED SKETCHES FOR LIMITATIONS). SINCE THESE WELDS WERE NOT READILY SEEN, IT IS ASSUMED THAT NOT ALL OF THE CODE REQUIRED EXAMINATION AREA WAS EXAMINED. IT IS ALSO ASSUMED THAT THE SCE-SUPPLIED SKETCH (SEE FIGURE 8 AND SPEED LETTER DATED 7/8/90 ROBERT HARDY (RI) TO ROBERT DELONG (SCE)) IS ACCURATE AS FAR AS WELD LOCATION. THE ACTUAL AREAS EXAMINED ARE SHOWN ON THE ATTACHED SKETCHES.

M. Orihuela Jr.

6059/4-76

EBASCO SERVICES INCORPORATED
QUALITY ASSURANCE ENGINEERING

INSERVICE INSPECTION SKETCH SHEET

LINE AND WELD(S) _____

DATE 7/8/90

EXAMINER M. ORIHUELA, JR.

PROJECT Songs Unit #1

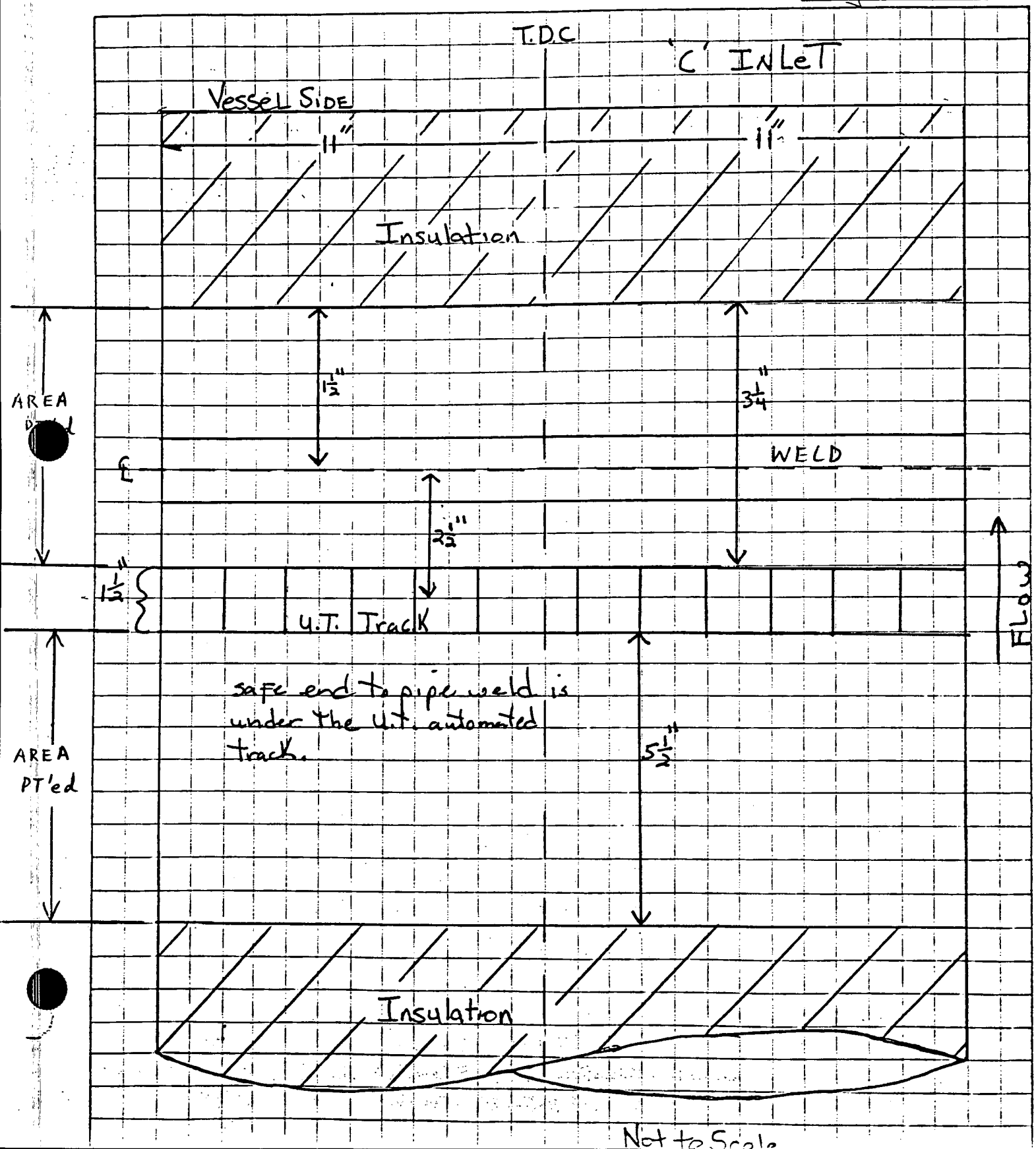

6059/4-76

EBASCO SERVICES INCORPORATED
QUALITY ASSURANCE ENGINEERING

INSERVICE INSPECTION SKETCH SHEET

LINE AND WELD(S) _____

DATE 7/5/90

EXAMINER M. ORIHUELA, JR.

PROJECT Songs Unit #1

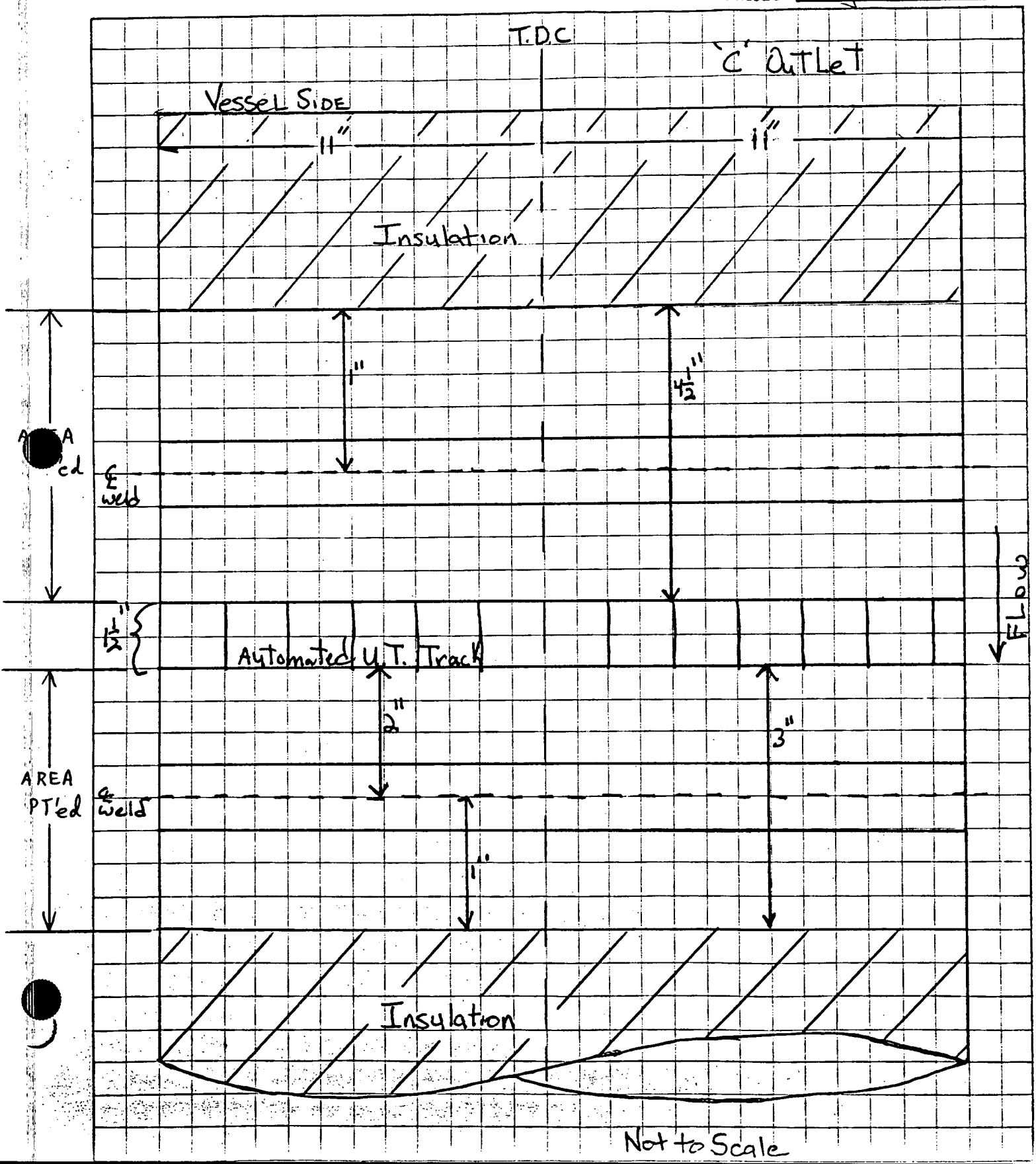

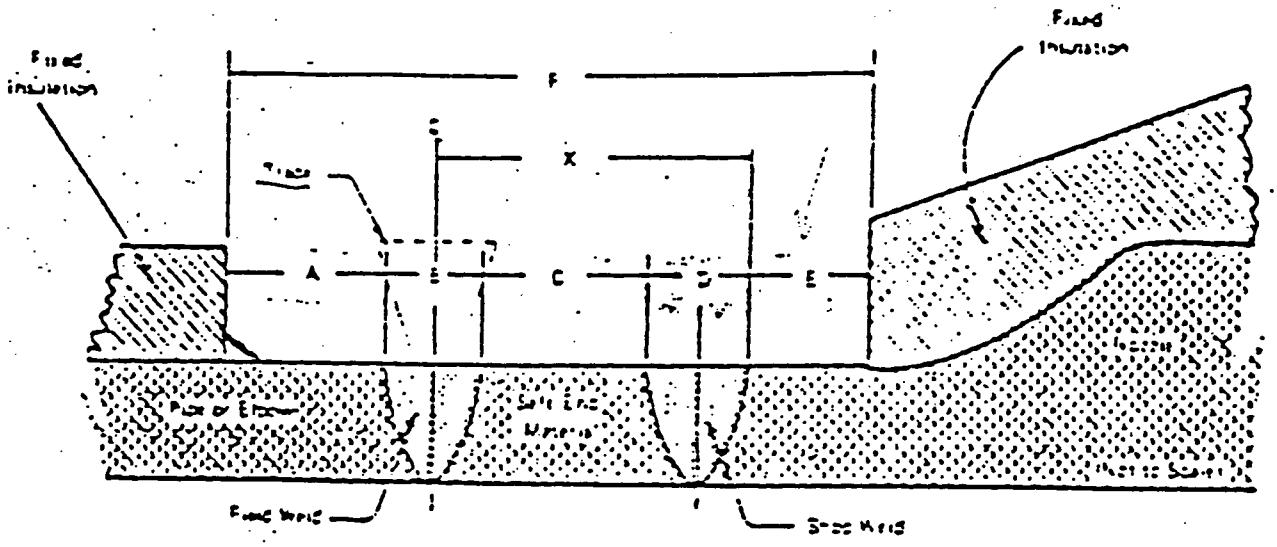

Reactor Vessel Nozzle Identification	Dimension (inches)						
	A	B	C	D	E	F	X*
A—Outlet (Hot Leg)	2	2	3	1-1/2	2	10-1/2	4
A—Inlet (Cold Leg)	2-1/2	1-1/2	2-1/2	2	1-3/4	10-1/4	5-3/4
B—Outlet (Hot Leg)	1-3/4	2	2-3/4	2	1	5-1/2	4
B—Inlet (Cold Leg)	1	2	2-1/2	2-1/4	2	5-3/4	4-1/4
C—Outlet (Hot Leg)	1	2	3	2	1	9	4-1/2
C—Inlet (Cold Leg)	2-1/4	2	2-5/8	1-7/8	1-1/2	10-1/4	5-1/2

*X is the distance from the track centerline to the edge of the nozzle. The difference from [illegible] indicates the [illegible] of the [illegible] of track centerline.

FIGURE 8. TRACK AND WELD LOCATIONS ON THE SIX INLET AND OUTLET REACTOR VESSEL NOZZLES

6063A/1-90

EBASCO SERVICES INCORPORATED
MATERIALS TESTING AND EXAMINATION SERVICES
ULTRASONIC CALIBRATION DATA

PROJECT SAN ONOFRE UNIT #1 DATA SHEET NO. 90-SCE-UT-008 DATE 7/22/90
SYSTEM REACTOR PRESSURE VESSEL PROCEDURE SCE-UT-575-1 * REV. 1

COMPONENT OR WELD IDENTIFICATION	TEMP	GAUGE ID	RECORDABLE INDICATION
CRDM HOUSING, WELD NO. 59	88°F	2048	SEE ATTACHED INDICATION
N/A	N/A	N/A	DATA SHEET.
			N/A
CAL BLOCK NO. CB-0036/50103 THK 0.74"	80°F	2048	NOTCHES N/A SDH ☑

EXAM COVERAGE

N/A ID ☑ OD N/A 0° WHAZ N/A 0° BASE MATERIAL ☑ AXIAL ☑ CIRCUMFERENTIAL N/A SIZING N/A OTHER N/A

EQUIPMENT DATA

SEARCH UNIT

Manufacturer KB AEROTECH
Style GAMMA ☑ Single N/A Dual
Serial No. F24759
Size(s) 0.25" Ø Freq. 2.25 MHz
Angle 45° Mode SHEAR
Couplant ULTRAGEL Batch No. 9088

INSTRUMENT

Manufacturer KRAUTKRAMER Model USK-7S
Serial No. 31459-1146 Cable Length 6'
Frequency BROADBAND Reject OFF
Rep Rate FIXED Damping N/A
dB Gain: Coarse AX 20 / CIRC 20 Fine AX 23 / CIRC 10
Primary Reference Response Amplitude - % Full Screen Height AX 1½T HOLE @ 80% FSH / CIRC ½T HOLE @ 80% FSH

DAC PLOT-TIME 1450 AM, PM

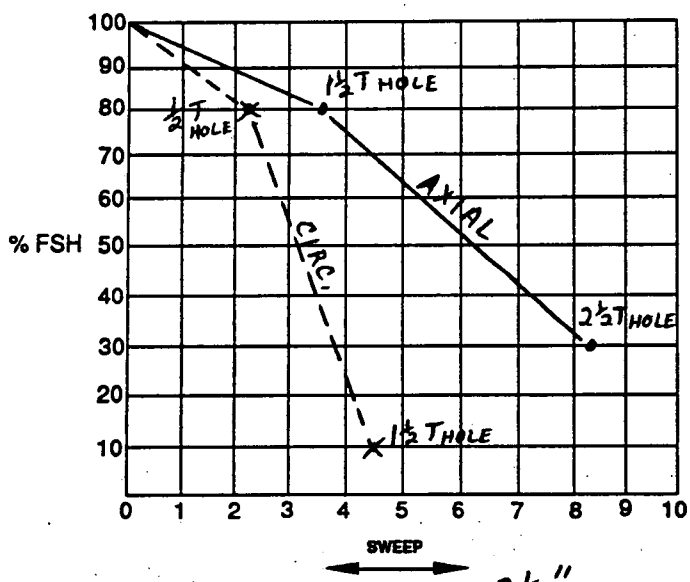

SCREEN SIZE: 2½"

NOTE: *When performing examinations where no DAC is required, indicate reference reflector location and amplitude above.*

CALIBRATION CHECKS

	AMPL ± 20% (dB) OF INITIAL AMPL		SWEEP + 10% OF INITIAL LOCATION	
TIME	YES	NO	YES	NO
FINAL 1530	✓	N/A	✓	N/A
		N/A		

EXAMINER(S):

1. M. Orik TC-1A LEVEL II DATE 7/22/90
2. [illegible] TC-1A LEVEL I DATE 7/22/90

REVIEWED BY:

1. W. Johnson LVL III DATE 8/1/90
2. J. Boardman SCE UT LIII DATE 8/9/90
ANII C. Thompson DATE 11/28/90

ADDITIONAL REMARKS DUE TO THE SHORTNESS OF THE CAL. BLOCK, THE 3½ T HOLE COULD NOT BE ACHIEVED FOR THE AXIAL SCAN.

*501-XXVII-22.7 REV. 0

6062/1-90

EBASCO SERVICES INCORPORATED

MATERIALS TESTING AND EXAMINATION SERVICES

INDICATION DATA

SHEET 2 OF 3

ITEM IDENTIFICATION CRDM #59

CALIBRATION DATA SHEET NO. 90-SCE-UT-005

DATA TABULATION

SCAN DIRECTION			INDICATION NO.	EXAM. ON (ADJ WELD) SIDE OF WELD	MAX % DAC	SWEEP READING	SEARCH UNIT EXIT POINT LOCATION		50% DAC OR HALF MAXIMUM AMPLITUDE				STRAIGHT BEAM (CAL ON BACK REFLECTION)	
									MINIMUM		MAXIMUM			
ST. BEAM	CIRCUMFERENTIAL	AXIAL					CIRCUMFERENTIAL (DISTANCE CW OR CCW FROM REFERENCE LINE)	AXIAL (DISTANCE FROM WELD ℄	SWEEP READING	S.U. POSITION	SWEEP READING	S.U. POSITION	INDICATION AMPLITUDE (% FSH)	BACK REFLECTION AMPLITUDE (% FSH)
N/A	N/A	✓	1	TOP	126	0.61"	1" NORTH OF WEST	0	0.58"	-0.17"	0.7"	0.05"	N/A	N/A
N/A	N/A	✓	2	BOTTOM	141	0.74"	↓	0.55" DN	0.7"	0.47"	0.8"	0.66"	N/A	N/A
									N	A				

INDICATION NO.	LOCATION OF INDICATION		LENGTH	% t		WIDTH (IF LAMINAR)
	CIRC	AXIAL		DEPTH (IF PLANAR)	DISTANCE FROM SURFACE	
				N	A	

COMMENTS

INDICATIONS 1 & 2 ARE SUSPECTED TO BE CAUSED BY BEAM REDIRECTION OFF OF THE I.D. SURFACE AND WERE SEEN FOR 360° INTERMITTENT AT VARYING AMPLITUDES. SUPPLEMENTAL 60° EXAM WILL BE PERFORMED.

EXAMINER(S)

1. M. Oril Jr. TC-1A LEVEL II

2. [illegible] TC-1A LEVEL I

REVIEWED BY [illegible] SCE UT LIII DATE 8/9/90

[illegible] AHII 11/28/90

CONTINUATION ATTACHED - ~~YES~~ ☑ NO

6059/4-76

EBASCO SERVICES INCORPORATED
QUALITY ASSURANCE ENGINEERING

INSERVICE INSPECTION SKETCH SHEET

PG. 3 OF 3
REPORT # 90-SCE-UT-0

LINE AND WELD(S) WELD No. 59
DATE 7/23/90
EXAMINER M. ORIHUELA
PROJECT SONGS-1

CRDM HOUSING, WELD No. 59

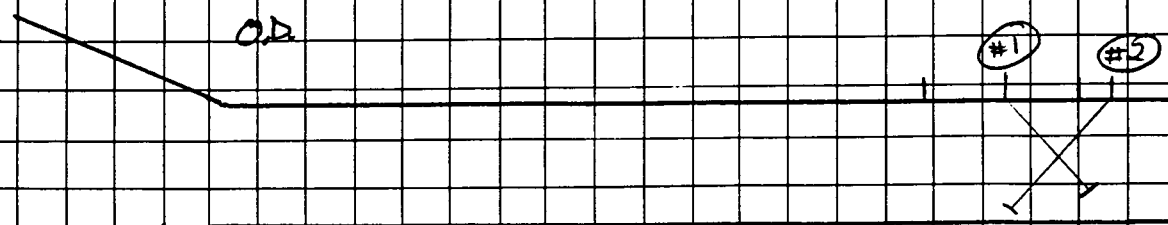

SCALE: 1-TO-1

Reviewed: J Boardman SCE UT LIII 8/3/90
R Thompson 11/28/90 11/28/90

6063A/1-90

EBASCO SERVICES INCORPORATED

MATERIALS TESTING AND EXAMINATION SERVICES

ULTRASONIC CALIBRATION DATA

PAGE 1 OF 1

PROJECT SAN ONOFRE UNIT #1 DATA SHEET NO. 90-SCE-UT-007 DATE 7/23/90

SYSTEM REACTOR PRESSURE VESSEL PROCEDURE SCE-UT-575-1 * REV. 1

COMPONENT OR WELD IDENTIFICATION	TEMP	GAUGE ID	RECORDABLE INDICATION
CRDM HOUSING, WELD NO. 59	88°F	2048	NONE.
	N		
		A	
CAL BLOCK NO. CB-0036/50109 THK 0.74"	80°F	2048	NOTCHES N/A SDH ☑

EXAM COVERAGE

N/A ID ☑ OD ☑ 0° WHAZ ☑ 0° BASE MATERIAL N/A AXIAL N/A CIRCUMFERENTIAL N/A SIZING N/A OTHER N/A

EQUIPMENT DATA

SEARCH UNIT

Manufacturer KB-AEROTECH

Style GAMMA N/A Single ☑ Dual

Serial No. C12787

Size(s) 0.375" Ø Freq. 2.25 MHz

Angle 0° Mode LONG.

Couplant ULTRAGEL Batch No. 9088

INSTRUMENT

Manufacturer KRAUTKRAMER Model USK-7S

Serial No. 31459-1146 Cable Length 6' DUAL

Frequency BROADBAND Reject OFF

Rep Rate FIXED Damping N/A

dB Gain: Coarse 20 Fine 14

Primary Reference Response Amplitude - % Full Screen Height 1ST BACK REFLECTION @ 70° FSH

DAC PLOT-TIME 1535 AM, PM

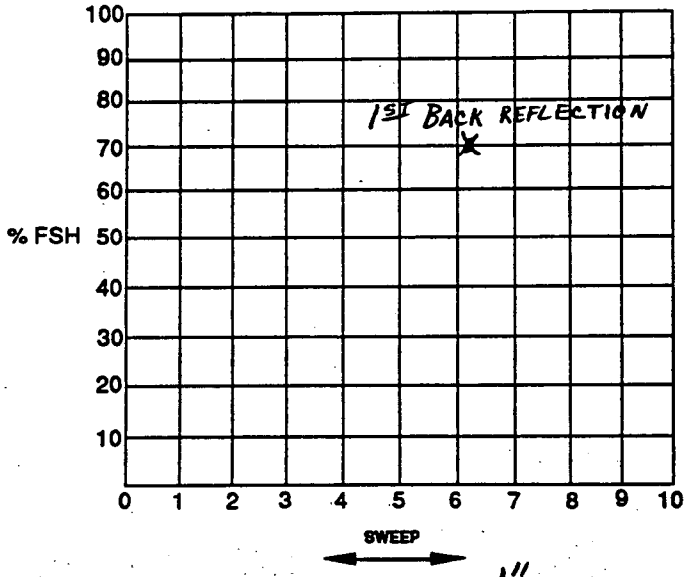

SCREEN SIZE: 1"

NOTE: *When performing examinations where no DAC is required, indicate reference reflector location and amplitude above.*

CALIBRATION CHECKS

	AMPL ± 20% (dB) OF INITIAL AMPL		SWEEP + 10% OF INITIAL LOCATION	
TIME	YES	NO	YES	NO
FINAL 1550	✓	N/A	✓	N/A
		N		
		A		

EXAMINER(S):

1. M. Oril Jr. TC-1A LEVEL II DATE 7/23/90

2. N/A TC-1A LEVEL N/A DATE N/A

REVIEWED BY:

1. [signature] DATE 8/1/90

2. [signature] SCE UT LIII DATE 8/3/90

ANII [signature] DATE 11/28/90

ADDITIONAL REMARKS * SOI-XXVII-22.7 REV. 0

6063A/1-90

EBASCO SERVICES INCORPORATED

MATERIALS TESTING AND EXAMINATION SERVICES

ULTRASONIC CALIBRATION DATA

PAGE 1 OF 1

PROJECT SAN ONOFRE UNIT #1 DATA SHEET NO. 90-SCE-UT-009 * DATE 7/27/90

SYSTEM REACTOR PRESSURE VESSEL PROCEDURE SCE-UT-575-1 REV. 1

COMPONENT OR WELD IDENTIFICATION	TEMP	GAUGE ID	RECORDABLE INDICATION
CRDM HOUSING, WELD No. 59	88°F	2048	NONE
		N/A	
CAL BLOCK NO. CB-0036/50109 THK 0.74"	76°F	2048	NOTCHES N/A SDH ☑

EXAM COVERAGE

N/A ID ☑ OD N/A 0° WHAZ N/A 0° BASE MATERIAL ☑ AXIAL N/A CIRCUMFERENTIAL N/A SIZING N/A OTHER N/A

EQUIPMENT DATA

SEARCH UNIT

Manufacturer KB AEROTECH

Style GAMMA ☑ Single N/A Dual

Serial No. F24760

Size(s) 0.25" Ø Freq. 2.25 MHz

Angle 60°/59° Mode SHEAR

Couplant ULTRAGEL Batch No. 9088

INSTRUMENT

Manufacturer KRAUTKRAMER Model USK-7S

Serial No. 31459-1146 Cable Length 6'

Frequency BROADBAND Reject OFF

Rep Rate FIXED Damping N/A

dB Gain: Coarse 40 Fine 12

Primary Reference Response Amplitude - % Full Screen Height ½ T HOLE @ 80% FSH

DAC PLOT-TIME 11:00 (AM) PM

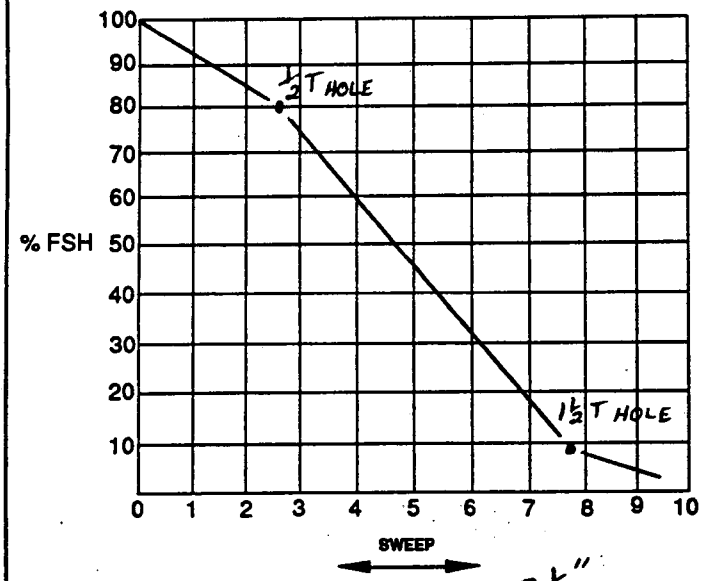

SCREEN SIZE: 2½"

NOTE: *When performing examinations where no DAC is required, indicate reference reflector location and amplitude above.*

CALIBRATION CHECKS

TIME	AMPL ± 20% (dB) OF INITIAL AMPL YES	AMPL ± 20% (dB) OF INITIAL AMPL NO	SWEEP + 10% OF INITIAL LOCATION YES	SWEEP + 10% OF INITIAL LOCATION NO
FINAL 1:35 PM	✓	N/A	✓	N/A
		N/A		

EXAMINER(S):

1. M. Orik Jr. TC-1A LEVEL II DATE 7/27/90

2. Richard Ward TC-1A LEVEL I DATE 7-27-90

REVIEWED BY:

1. Steve Spindler LII DATE 7/27/90

2. Wayne Johnson DATE 7-30-90

ANII C.D. Thompson DATE 11/28/90

ADDITIONAL REMARKS * 501-XXVII-22.7 REV. 1

THIS EXAM WAS PERFORMED TO EVALUATE THE 45° INDICATIONS FOUND (SEE REPORT No. 90-SCE-UT-008). NO RECORDABLE INDICATIONS WERE SEEN. SENSITIVITY WAS ESTABLISHED USING THE ½ T HOLE RATHER THAN THE 1½ T HOLE SINCE THE CAL. BLOCK LACKED ROOM TO ESTABLISH A 1½ T & 2½ T DAC.

Reviewed: [illegible] SECIT LIII 8/9/90

6063A/1-90

EBASCO SERVICES INCORPORATED
MATERIALS TESTING AND EXAMINATION SERVICES
ULTRASONIC CALIBRATION DATA

PAGE 1 OF 1

PROJECT San OnoFre Unit #1 DATA SHEET NO. 90-SCE-UT-006 DATE 7-22-90
SYSTEM RPV Closure Head PROCEDURE SCE-UT-575-2* REV. 1

COMPONENT OR WELD IDENTIFICATION	TEMP	GAUGE ID	RECORDABLE INDICATION
Weld 6C; Holes 29 thru 42	88°F	2048	NONE
	N/A		
CAL BLOCK NO. 50104/CB-0031 THK 9.0"	88°F	2048	NOTCHES ☒ N/A SDH ☒

EXAM COVERAGE

☒ ID ☒ OD ☒ 0° WHAZ ☒ 0° BASE MATERIAL ☒ AXIAL ☒ CIRCUMFERENTIAL ☒ SIZING ☒ OTHER N/A

EQUIPMENT DATA

SEARCH UNIT

Manufacturer KB-AeroTech
Style Gamma ☒ Single ☒ Dual
Serial No. H13758
Size(s) .50" x 1.0" Freq. 2.25
Angle 60° Mode Shear
Couplant Ultragel II Batch No. 9088

INSTRUMENT

Manufacturer Krautkramer-Branson Model USK-7S
Serial No. 31459-2838 Cable Length 6'
Frequency Broad Band Reject OFF
Rep Rate Fixed Damping N/A
dB Gain: Coarse 20 Fine 31
Primary Reference Response Amplitude - % Full Screen Height 80% FSH 1/4T Hole

DAC PLOT-TIME 11:50 (AM), PM

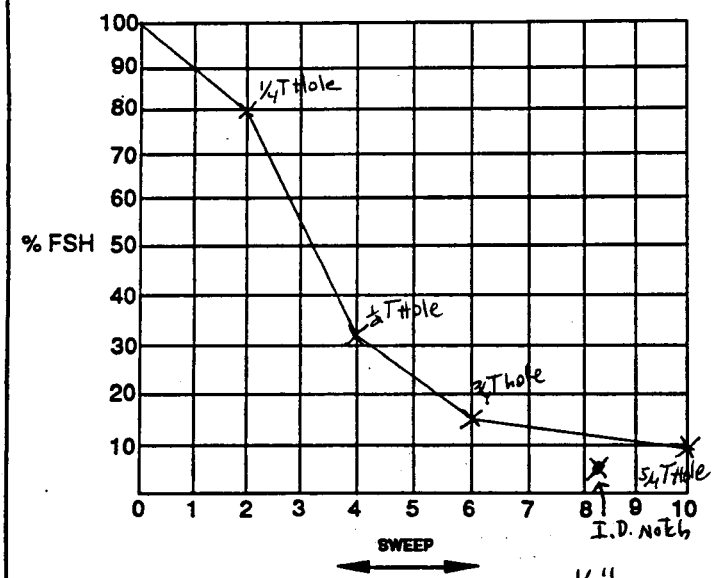

SCREEN SIZE: 22½"

NOTE: *When performing examinations where no DAC is required, indicate reference reflector location and amplitude above.*

CALIBRATION CHECKS

TIME	AMPL ± 20% (dB) OF INITIAL AMPL YES	AMPL ± 20% (dB) OF INITIAL AMPL NO	SWEEP + 10% OF INITIAL LOCATION YES	SWEEP + 10% OF INITIAL LOCATION NO
FINAL 1320 pm		N/A		N/A
		N/A		

EXAMINER(S):

1. M. Orick TC-1A LEVEL II DATE 7-22-90
2. [illegible] TC-1A LEVEL I DATE 7-22-90

REVIEWED BY:

1. Steve Spindler LII DATE 7/26/90
2. W.J. Johnson LIII DATE 7-27-90

ANII C. Thompson DATE 7-28-90

ADDITIONAL REMARKS * S01-XXVII-22.6 Rev 0

The Axial Scan was performed from one side only Due To configuration. The circ. scan was performed on one side only Due to configuration. When maximizing the response From the 3/4T Hole, there was A 4db Difference Between the clad/unclad sides of the Block. See 0° Report For Limitation (Lifting Lugs.) (REPORT 90-SCE-UT-204)

Reviewed: J. Boardman SCE UT LIII 8/6/90

6063A/1-90

EBASCO SERVICES INCORPORATED
MATERIALS TESTING AND EXAMINATION SERVICES
ULTRASONIC CALIBRATION DATA

PAGE 1 OF 2

PROJECT SAN ONOFRE UNIT 1 DATA SHEET NO. 90-SCE-UT-004 DATE 7-22-90

SYSTEM CLOSURE HEAD PROCEDURE SCE-UT-S75-2 * REV. 1

COMPONENT OR WELD IDENTIFICATION	TEMP	GAUGE ID	RECORDABLE INDICATION
CLOSURE HEAD TO FLANGE, WELD 6C, FROM STUD HOLE 28 TO 1.	88°F	2048	NONE
CAL BLOCK NO. CB-0031/50104 THK 9"	88°F	2048	NOTCHES N/A SDH ☒

EXAM COVERAGE

N/A ID N/A OD ☒ 0° WHAZ ☒ 0° BASE MATERIAL N/A AXIAL N/A CIRCUMFERENTIAL N/A SIZING N/A OTHER N/A

EQUIPMENT DATA

SEARCH UNIT

Manufacturer K-B AEROTECH
Style GAMMA ☒ Single N/A Dual
Serial No. C24771
Size(s) 1.0" Freq. 2.25 MHz
Angle 0° Mode LONGITUDINAL
Couplant ULTRAGEL II Batch No. 9088

INSTRUMENT

Manufacturer KRAUTKRAMER BRANSON Model USK-7S
Serial No. 31459-1146 Cable Length 6' BNC-BNC
Frequency BROADBAND Reject OFF
Rep Rate FIXED Damping N/A
dB Gain: Coarse 20 Fine 0
Primary Reference Response Amplitude - % Full Screen Height 1/4T HOLE @ 80% FSH

DAC PLOT-TIME 1315 AM/PM

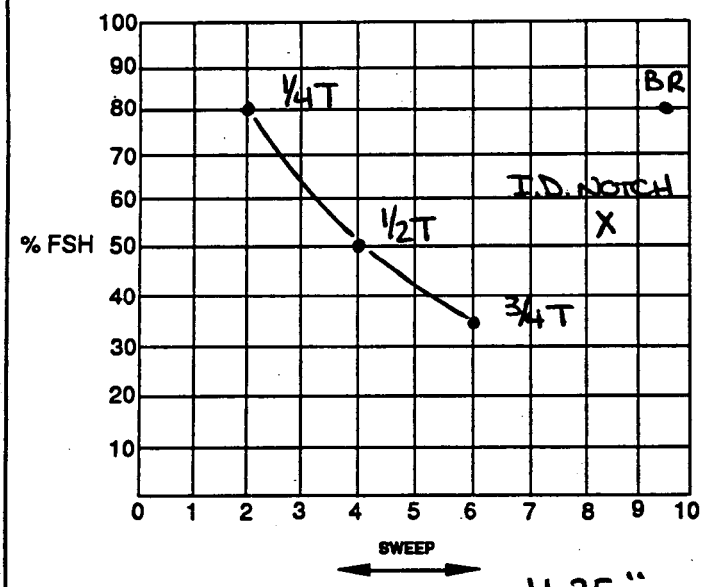

SCREEN SIZE: 11.25"

NOTE: *When performing examinations where no DAC is required, indicate reference reflector location and amplitude above.*

CALIBRATION CHECKS

TIME	AMPL ± 20% (dB) OF INITIAL AMPL: YES	NO	SWEEP + 10% OF INITIAL LOCATION: YES	NO
FINAL 1345 PM	X	N/A	X	N/A
		N/A		

EXAMINER(S):

1. Steve Spindler TC-1A LEVEL II DATE 7/22/90
2. J. Spikle TC-1A LEVEL I DATE 7/22/90

REVIEWED BY:

1. M. Orid Jr. DATE 7/26/90
2. J.A. Johnson III DATE 7-27-90

ANII C.D. Thompson DATE 11/28/90

ADDITIONAL REMARKS

1/4T - 2.0 @ 80% FSH
1/2T - 4.0 @ 50% FSH
3/4T - 6.0 @ 35% FSH
I.D. NOTCH 8.4 @ 55% FSH

BACK REFLECTION - 9.6 @ 80% FSH ; 40dB.
NOTE: COMPLETE ONE SIDE ONLY - CLOSURE HEAD TO FLANGE - CLOSURE HEAD SIDE.
* SOI-XXVII-22.6 REV. 0

Reviewed: J. Boardman SCE UT LIII 8/6/90

6059/4-76

EBASCO SERVICES INCORPORATED
QUALITY ASSURANCE ENGINEERING

INSERVICE INSPECTION SKETCH SHEET

REPORT #90-SCE-UT-004

LINE AND WELD(S) RPV WELD # 6C

DATE 7/22/90

DRAWN BY: ~~EXAMINER~~ M.O. 7-26-90 M. ORIHUELA

PROJECT SONGS-1

LIMITATION FOR ANGLE BEAM EXAMINATION OF RPV CLOSURE HEAD WELD # 6C.

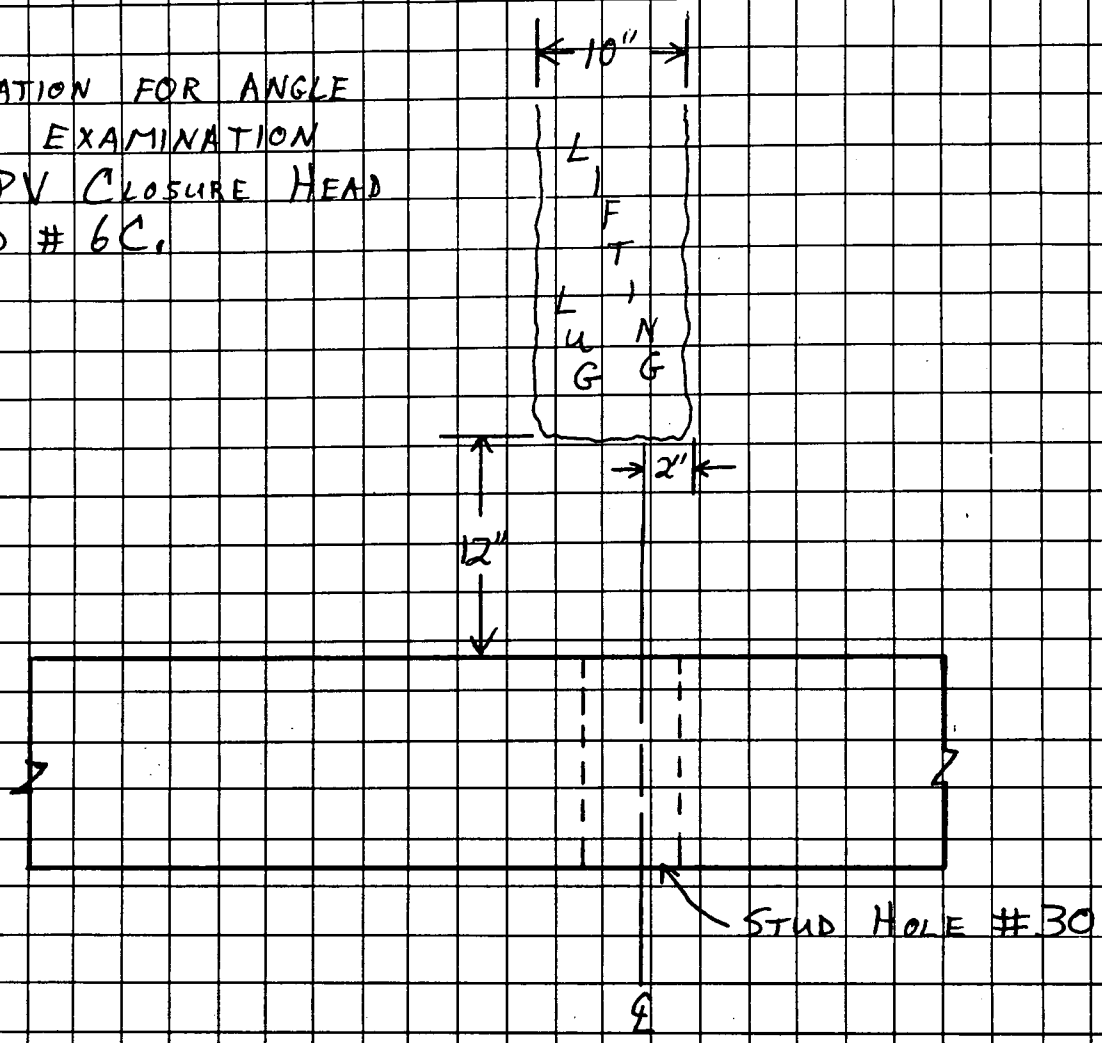

NOT TO SCALE

Reviewed: J. Boardman 8/6/90
SCE UT LIII

ANII 11/28/90

6063A/1-90

EBASCO SERVICES INCORPORATED
MATERIALS TESTING AND EXAMINATION SERVICES
ULTRASONIC CALIBRATION DATA

PAGE 1 OF 1

PROJECT SAN ONOFRE UNIT #1 DATA SHEET NO. 90-SCE-UT-005 DATE 7/22/90
SYSTEM CLOSURE HEAD PROCEDURE SCE-UT-S75-2* REV. 1

COMPONENT OR WELD IDENTIFICATION	TEMP	GAUGE ID	RECORDABLE INDICATION
CLOSURE HEAD TO FLANGE, WELD 6C	88°F	2048	NONE
FROM STUD HOLE #28 TO #1			SEE REMARKS FOR LIMITATIONS
CAL BLOCK NO. CB-0031/50104 THK 9"	88°	2048	NOTCHES ☒ SDH ☒

EXAM COVERAGE

N/A ID N/A OD N/A 0° WHAZ N/A 0° BASE MATERIAL ☒ AXIAL ☒ CIRCUMFERENTIAL N/A SIZING N/A OTHER N/A

EQUIPMENT DATA

SEARCH UNIT

Manufacturer K.B. AEROTECH
Style GAMMA ☒ Single N/A Dual
Serial No. A26435
Size(s) .5" x 1.0" Freq 2.25 MHZ
Angle 45° Mode SHEAR
Couplant ULTRAGEL II Batch No. 9088

INSTRUMENT

Manufacturer KRAUTKRAMER BRANSON Model USK-7S
Serial No. 31459-1146 Cable Length 6' BNC TO BNC
Frequency BROAD BAND Reject OFF
Rep Rate FIXED Damping N/A
dB Gain: Coarse 20 Fine 17
Primary Reference Response Amplitude - % Full Screen Height 1/4T HOLE @ 80% FSH

DAC PLOT-TIME 11:45 (AM) PM

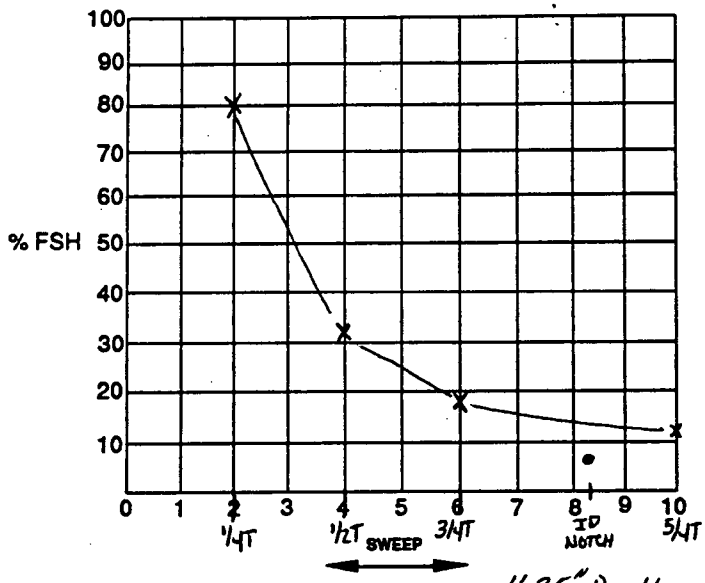

SCREEN SIZE: 11.25" Depth

NOTE: *When performing examinations where no DAC is required, indicate reference reflector location and amplitude above.*

CALIBRATION CHECKS

TIME	AMPL ± 20% (dB) OF INITIAL AMPL: YES	AMPL ± 20% (dB) OF INITIAL AMPL: NO	SWEEP + 10% OF INITIAL LOCATION: YES	SWEEP + 10% OF INITIAL LOCATION: NO
FINAL 1310 PM	X	N/A	X	N/A

EXAMINER(S):

1. Steve Spindler TC-1A LEVEL II DATE 7/22/90
2. J. Spolch TC-1A LEVEL I DATE 7/22/90

REVIEWED BY:

1. M. Oriel Jr. DATE 7/26/90
2. W.J. Johnny III DATE 7-27-90
ANII C.D. Thompson DATE 11/28/90

ADDITIONAL REMARKS *SOI-XXVII-22.6 REV.0 NOTE: THERE IS A 3DB DIFFERENCE FROM THE 3/4T HOLE AND THE 5/4T HOLE THROUGH THE CLADDING.

SCANNED ONE SIDE ONLY - CLOSURE HEAD SIDE - DUE TO FLANGE SIDE CONFIGURATION
A 6 INCH x 4 INCH AREA AT OUTER END OF SCAN PATH WAS OBSTRUCTED DUE TO LIFTING LUG ATTACHMENT TO CLOSURE HEAD @ 255° OVER STUD HOLE #30 (REPORT 90-SCE-UT-004)

Reviewed: J. Boardman SCE UT LIII 8/6/90

1512/10-87

EBASCO SERVICES INCORPORATED
QUALITY ASSURANCE ENGINEERING
INSERVICE INSPECTION
RVP VT-1 / VT-3

DATA SHT NO. 90-SC VT-003

STATION San Onofre	UNIT NO. 1	DATE 7-28-90
ASME SEC. XI CLASS 1	SECTION XI CATEGORY TW13	SEC. XI ITEM NO. B-N-3
COMPONENT DESCRIPTION Upper Guide Structure Assembly		EXAMINATION AREA See Below
EQUIPMENT Mini Rover MK-I		VT-1 N/A VT-3 X
PROCEDURE NO. SCE-RVT-595-1 (*)	REVISION 1	VIDEO TAPE NO. 1

RELEVANT CONDITIONS	LOCATION	COMMENTS
LIMITATIONS	See Comments	Accessible Areas Examined
PHYSICAL DAMAGE	NRI	
WEAR		
CORROSION		
EROSION		
MISSING/LOOSE PARTS		
STRUCTURAL INTEGRITY		
MISALIGNMENT		
CRACKS	NRI	
OTHER	N/A	

COMMENTS:

None

(*) SOI-XXVII-22.4, REV.0

EXAMINER / LEVEL	Joseph Bagley Lvl III		DATE 7-28-90
REVIEWED BY / LEVEL	W. J. Johnson III DATE 8/1/90	AUTHORIZED INSPECTOR	DATE 11/28/90

Reviewed O. Cole SCE VT L-III 8-11-90

EBASCO SERVICES INCORPORATED
QUALITY ASSURANCE ENGINEERING
INSERVICE INSPECTION

DATA SHT NO. 90-SCE-VT-004

1512-B/10-87

REMOTE VISUAL EXAMINATION SYSTEM RESOLUTION VERIFICATION FORM

Station San Onofre Unit No. 1 Date 7-28-90

System Description Mini Rover MK I Post Exam
Tape No. 1

System capable of resolving 1/32" blackline on an 18% neutral

Gray Card: ☒ Satisfactory ☐ Unsatisfactory

Approximate Maximum Distance 18"

Ebasco VT Level III Approval [signature] Date 7-28-90
W.J. Johnson 8/1/90

EBASCO SERVICES INCORPORATED
QUALITY ASSURANCE ENGINEERING
INSERVICE INSPECTION

DATA SHT NO. 90-SCE-VT-001

1512-B/10-87

REMOTE VISUAL EXAMINATION SYSTEM RESOLUTION VERIFICATION FORM

Station San Onofre Unit No. 1 Date 7-28-90

System Description Mini Rover MK I Pre Exam
Tape No. 1

System capable of resolving 1/32" blackline on an 18% neutral

Gray Card: ☒ Satisfactory ☐ Unsatisfactory

Approximate Maximum Distance 18"

Ebasco VT Level III Approval [signature] Date 7-28-90
W.J. Johnson 8/1/90

1512/10-87

EBASCO SERVICES INCORPORATED
QUALITY ASSURANCE ENGINEERING
INSERVICE INSPECTION
RVP VT-1 / VT-3

DATA SHT NO. 90-SCE T-018

Pg 1 of 2

STATION San Onofre	UNIT NO. 1	DATE 7-30-90
ASME SEC. XI CLASS 1	SECTION XI CATEGORY B-L-1	SEC. XI ITEM NO. B-N-3
COMPONENT DESCRIPTION Core Barrel Exterior		EXAMINATION AREA
EQUIPMENT Mini Rover		VT-1 ____ VT-3 ✓
PROCEDURE NO. SCI-XXVII-22.1	REVISION 0	VIDEO TAPE NO. 2

RELEVANT CONDITIONS	LOCATION	COMMENTS
LIMITATIONS	None	Indication located at Pointer Location
PHYSICAL DAMAGE	NRI	4/279. Indication found during
WEAR		Review of Video Tape on 8-23-90
CORROSION		* EBASCO Procedure SCE-RVT-575-1 R-1
EROSION		
MISSING/LOOSE PARTS		
STRUCTURAL INTEGRITY		
MISALIGNMENT	NRI	
CRACKS	RI	
OTHER	NRI	

COMMENTS:

None

SEE: NCR #900801-90 R. Devong 9/7/90

EXAMINER / LEVEL	Terry Bailey III		DATE 8-23-90
REVIEWED BY / LEVEL	J. P. Johnson Lv III	DATE 9-6-90	AUTHORIZED INSPECTOR	DATE

90 SCE-VT-018

EBASCO SERVICES INCORPORATED

BY TB DATE 8-23-90 SHEET 2 OF 2

CHKD. BY _____ DATE _____ OFS NO. N/A DEPT. NO. N/A

CLIENT Southern California Edison Company

PROJECT San Onofre Unit 1

SUBJECT Irradiation Specimen Basket @ 28°-44'

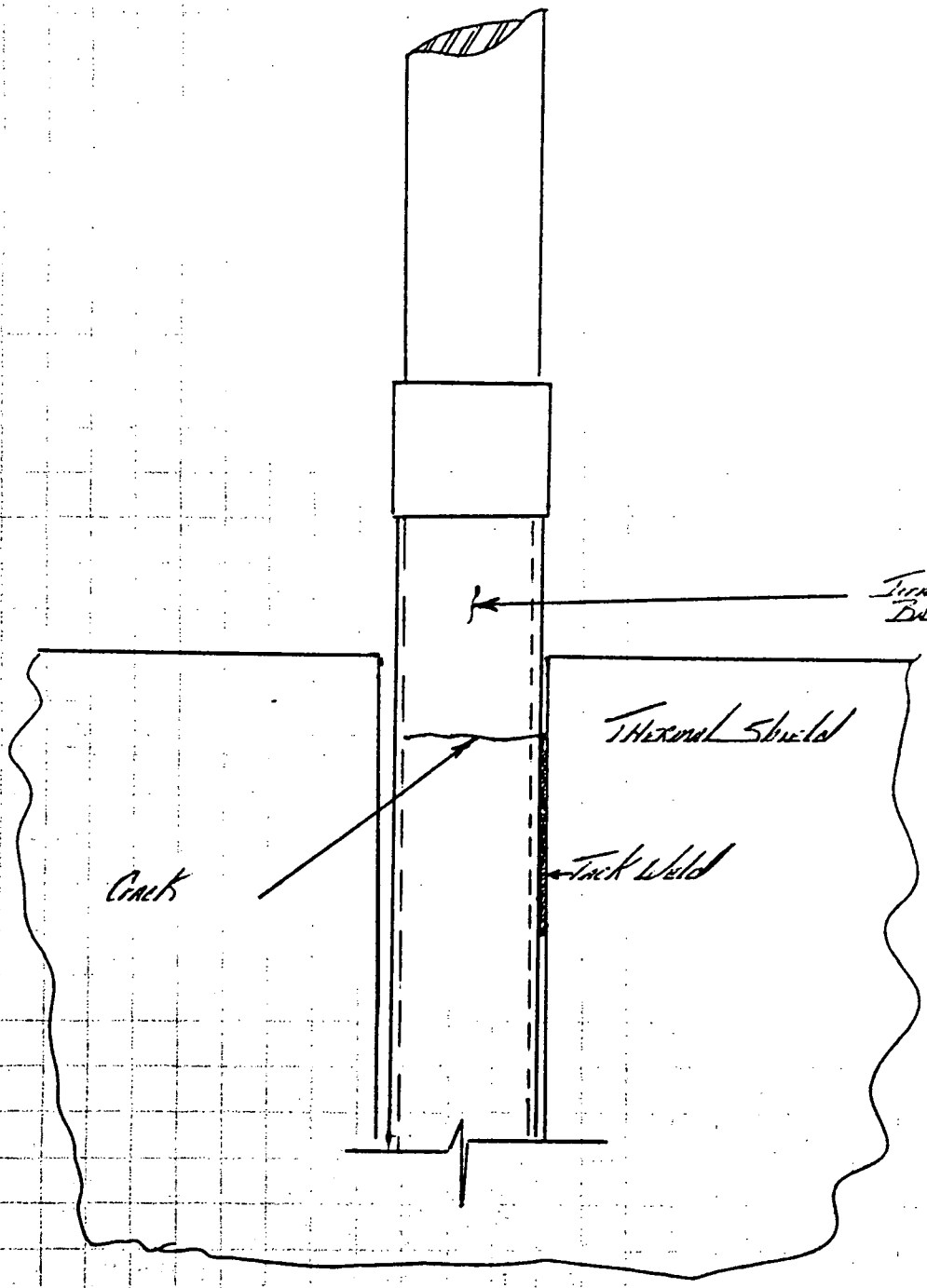

For Illustrative Purposes only

Examiner [signature] Level III Date 8-23-90

581 2-88

1512/10-87

EBASCO SERVICES INCORPORATED
QUALITY ASSURANCE ENGINEERING
INSERVICE INSPECTION
RVP VT-1 / VT-3

DATA SHT NO. 90-SCE-VT-018

Pg 1 of 2

STATION San Onofre	UNIT NO. 1	DATE 7-30-90
ASME SEC. XI CLASS 1	SECTION XI CATEGORY B-L-1	SEC. XI ITEM NO. B-N-3
COMPONENT DESCRIPTION Core Barrel Exterior		EXAMINATION AREA
EQUIPMENT Mini Rover		VT-1 ____ VT-3 ✓
PROCEDURE NO. 501-XXVII-22.4	REVISION 0	VIDEO TAPE NO. 2

RELEVANT CONDITIONS	LOCATION	COMMENTS
LIMITATIONS	None	Indication located at Pointer Location
PHYSICAL DAMAGE	NRI	4299. Indication Found during
WEAR		Review of Video Tape on 8-23-90
CORROSION		* Ebasco Procedure SCE-RVT-575-1 R-1
EROSION		
MISSING/LOOSE PARTS		
STRUCTURAL INTEGRITY		
MISALIGNMENT	NRI	
CRACKS	RI	
OTHER	NRI	

COMMENTS:

None

SEE: NCR #900801900 R DeLong 9/7/90

EXAMINER / LEVEL	Joseph Bagley III		DATE 8-23-90
REVIEWED BY / LEVEL	LV III DATE 9-6-90	AUTHORIZED INSPECTOR	DATE

90-SCE-VT-018

EBASCO SERVICES INCORPORATED

BY TB DATE 8-23-90 SHEET 2 OF 2

CHKD. BY _____ DATE _____ OFS NO. N/A DEPT. NO. N/A

CLIENT Southern California Edison Company

PROJECT San Onofre Unit 1

SUBJECT Irradiation Specimen Basket @ 28°-44'

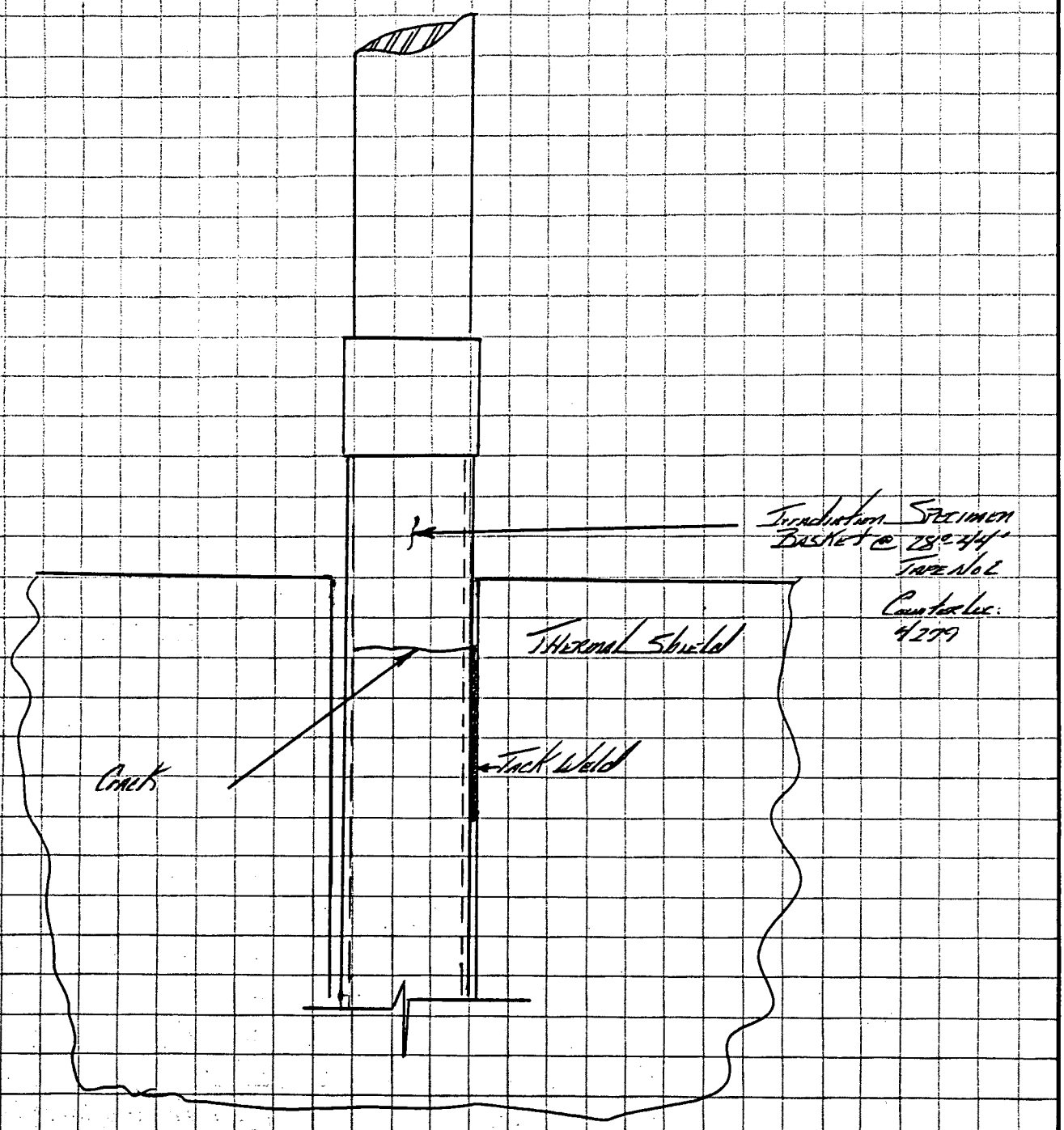

For Illustrative Purposes only

Examiner [signature] Level III Date 8-23-90

581 2-88

1512/10-87

EBASCO SERVICES INCORPORATED
QUALITY ASSURANCE ENGINEERING
INSERVICE INSPECTION
RVP VT-1 / VT-3

DATA SHT NO. 90-SCE VT-016

PG. 1 OF 5

STATION San Onofre	UNIT NO. 1	DATE 7-30-90
ASME SEC. XI CLASS 1	SECTION XI CATEGORY B-N-3	SEC. XI ITEM NO. B.1.17
COMPONENT DESCRIPTION Core Barrel		EXAMINATION AREA Exterior
EQUIPMENT Mini Rover Binoculars		VT-1 N/A VT-3 X
PROCEDURE NO. SO1-XXVII-22.4 *	REVISION 0	VIDEO TAPE NO. 2 and 3

RELEVANT CONDITIONS	LOCATION	COMMENTS
LIMITATIONS	See Comments	All accessible Areas Examined
PHYSICAL DAMAGE	See Comments	Upper Portion of Core Barrel ~ ℄ of
WEAR	NRI	Hot Leg Nozzels to Core Barrel Flange
CORROSION	NRI	Examined with Binoculars
EROSION	NRI	* EBASCO Procedure SCE-RVT-575-1 R.1
MISSING/LOOSE PARTS	See Comments	Use Core Barrel Head to Core Barrel
STRUCTURAL INTEGRITY	See Comments	Weld Examined NRI
MISALIGNMENT	NRI	Core Barrel Support Blocks NRI
CRACKS	See Comments	
OTHER	N/A	

COMMENTS:
Flexural Fixtures RI See Pg 4 of 5
Irradiation Specimen Baskets RI See Pg 2 of 5
Thermal Shield Support Blocks See Pg 5 of 5 RI
Secondary Core Support
Damaged Bolt Locking Cap
~ 300° Leg Tape No. 3 Counter Location 1075

Flexural Fixture @ 120° NRI
Irradiation Specimens @ 28°14', 32°54', 131°15' 138°15' and 151°16' NRI
Thermal Shield Support Block @ 60°, 120° & 180° NRI

Page 1 of 5

EXAMINER / LEVEL	Joseph Bailey Lvl III		DATE 8-6-90
REVIEWED BY / LEVEL	W.J. Johnson Lvl III	DATE 8-6-90	AUTHORIZED INSPECTOR C. Thompson DATE 11/28/90

Reviewed Tape #2 D. Roby SCE VT L-III 8-11-90
Reviewed Tape #3 D. Roby SCE VT L-III 8-15-90

90-SCE-VT-016

EBASCO SERVICES INCORPORATED

BY JBWW DATE _____ SHEET 2 OF 5

CHKD. BY _____ DATE _____ OFS NO. N/A DEPT. NO. N/A

CLIENT Southern California Edison Company

PROJECT San Onofre Unit 1

SUBJECT Irradiation Specimen Basket

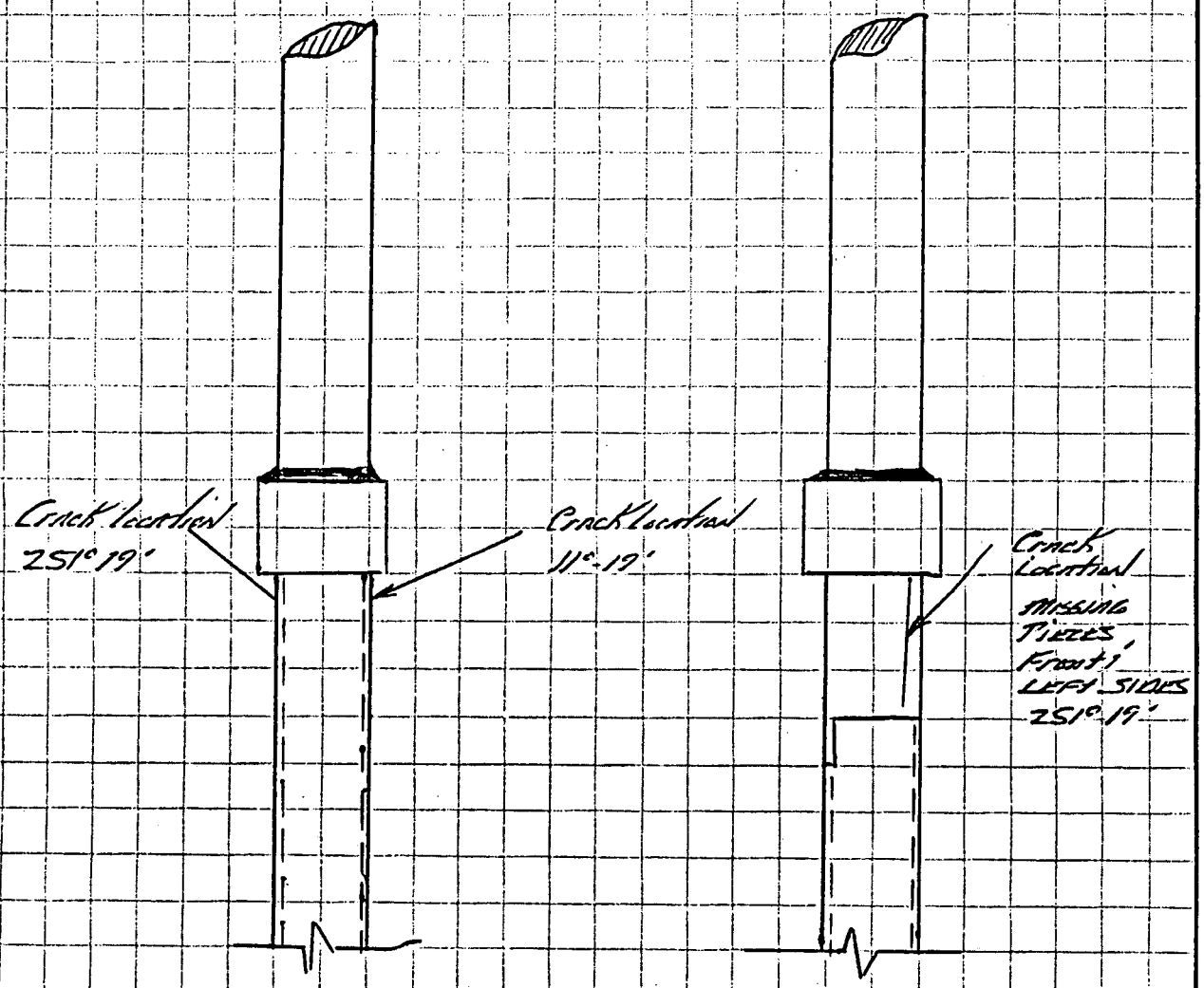

Irradiation Specimen Basket	Counter location	Tape No.
11° 19'	3816	2
258° 41'	4710	2
251° 19'	4758	2

For Illustrative Purposes Only
NTS

Examiner [signature] Lvl III Date 8-6-90

581 2-88

90-SCE-VT-016

EBASCO SERVICES INCORPORATED

BY JB Lvl III DATE 8-6-90 SHEET 3 OF 5

CHKD. BY _____ DATE _____ OFS NO. N/A DEPT. NO. N/A

CLIENT Southern California Edison Company

PROJECT San Onofre Unit 1

SUBJECT Flexural Blocks

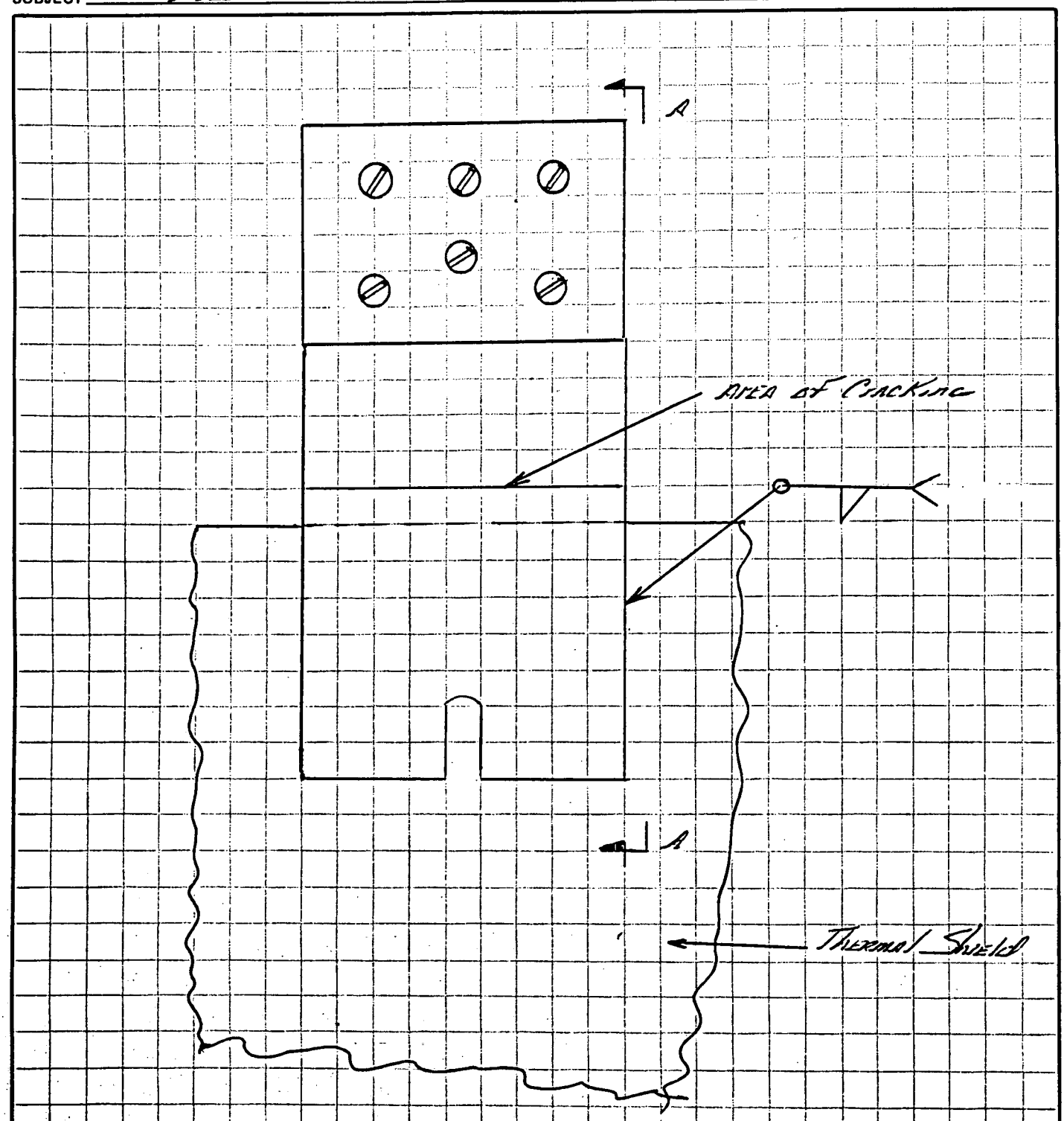

FOR ILLUSTRATIVE PURPOSES ONLY
N.T.S.

EXAMINER [signature] LVL III Date 8-6-90

581 2-88

90-SCE-VT-016

EBASCO SERVICES INCORPORATED

BY TB Lvl III DATE 8-6-90 SHEET 4 OF 5

CHKD. BY _____ DATE _____ OFS NO. N/A DEPT. NO. N/A

CLIENT Southern California Edison Company

PROJECT San Onofre Unit 1

SUBJECT Flexural Blocks

Section A-A

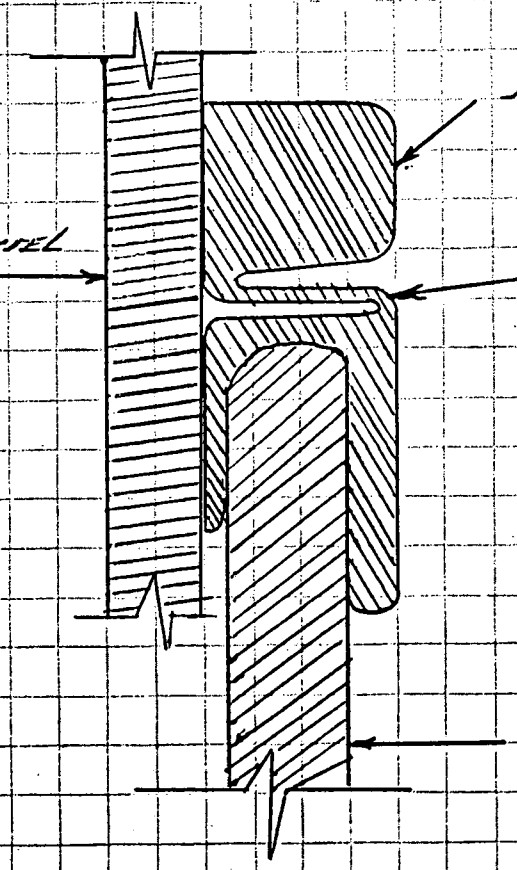

Flexural Fixture's Cracked	Counter Location	Tape No.
210°	3868	2
85°	4323	2
205°	5027	2
244°	4920	2
325°	3736	2

For Illustrative Purposes Only!
N.T.S

Examiner [signature] Lvl III Date 8-6-90

581 2-88

1512-B/10-87

EBASCO SERVICES INCORPORATED
QUALITY ASSURANCE ENGINEERING
INSERVICE INSPECTION

DATA SHT NO. 90-SCE-VT-014

REMOTE VISUAL EXAMINATION SYSTEM RESOLUTION VERIFICATION FORM

Station San Onofre Unit No. 1 Date 7-30-90

System Description Mini Rover MKI
Post Vessel / Pre Core Barrel

System capable of resolving 1/32" blackline on an 18% neutral

Gray Card: ☑ Satisfactory ☐ Unsatisfactory

Approximate Maximum Distance 2 FT

Ebasco VT Level III Approval W.J. Johnson 8/6/90 Date 7-30-90

1512-B/10-87

EBASCO SERVICES INCORPORATED
QUALITY ASSURANCE ENGINEERING
INSERVICE INSPECTION

DATA SHT NO. 90-SCE-VT-015

REMOTE VISUAL EXAMINATION SYSTEM RESOLUTION VERIFICATION FORM

Station San Onofre Unit No. 1 Date 7-30-90

System Description Mini Rover MKI
Post Core Barrel Examination

System capable of resolving 1/32" blackline on an 18% neutral

Gray Card: ☑ Satisfactory ☐ Unsatisfactory

Approximate Maximum Distance 2 FT

Ebasco VT Level III Approval W.J. Johnson 8/6/90 Date 7-30-90

90-SCE-V1-016

EBASCO SERVICES INCORPORATED

BY TBLUETT DATE 8-6-90 SHEET 5 OF 5

CHKD. BY _____ DATE _____ OFS NO. N/A DEPT. NO. N/A

CLIENT Southern California Edison Company

PROJECT San Onofre Unit 1

SUBJECT Lower Thermal Shield Support Blocks

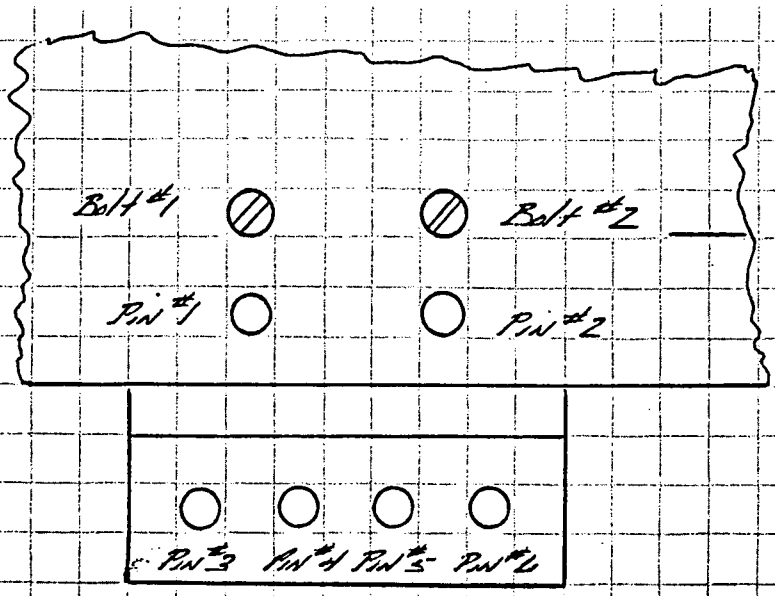

Thermal Shield Support Block			Counter In.	Tape No
240°	Pin #1	Backing Out	5320	2
	Bolt #1	Broken Tacks Thermal Shield Spalled		
	Bolt #2	Cracked Tack		
300°	Pin #2	Backing Out	5492	2
	Pin #1	Cracked Tacks		
	Bolt #1	Broken Tacks on Locking Bar		
0°	Pin #2	Cracked Tacks	5642	2
	Pin #1	Cracked Tacks		

For Illustrative Purposes Only

N.T.S.

Examiner [signature] Lvl III Date 8/6/90

581 2-88

1512-B/10-87

EBASCO SERVICES INCORPORATED
QUALITY ASSURANCE ENGINEERING
INSERVICE INSPECTION

DATA SHT NO. 90-SCE-VT-011

REMOTE VISUAL EXAMINATION SYSTEM RESOLUTION VERIFICATION FORM

Station San Onofre Unit No. 1 Date 8-4-90

System Description Pan & Tilt Camera with 10X Zoom Lens
Pre-Examination

System capable of resolving 1/32" blackline on an 18% neutral

Gray Card: ☑ Satisfactory ☐ Unsatisfactory

Approximate Maximum Distance 10 Feet

Ebasco VT Level III Approval [signature] Date 8-4-90

W. F. Johnson 8/6/90

1512-B/10-87

EBASCO SERVICES INCORPORATED
QUALITY ASSURANCE ENGINEERING
INSERVICE INSPECTION

DATA SHT NO. 90-SCE-VT-012

REMOTE VISUAL EXAMINATION SYSTEM RESOLUTION VERIFICATION FORM

Station San Onofre Unit No. 1 Date 8-4-90

System Description Pan & Tilt Camera with 10X Zoom Lens
Post-Examination

System capable of resolving 1/32" blackline on an 18% neutral

Gray Card: ☒ Satisfactory ☐ Unsatisfactory

Approximate Maximum Distance 10 Ft

Ebasco VT Level III Approval [signature] Date 8-4-90

W. F. Johnson 8/6/90

1512/10-87

EBASCO SERVICES INCORPORATED
QUALITY ASSURANCE ENGINEERING
INSERVICE INSPECTION
RVP VT-1 / VT-3

DATA SHT NO. 90-SCE-013

STATION San Onofre	UNIT NO. 1	DATE 8-4-90
ASME SEC. XI CLASS 1	SECTION XI CATEGORY B-N-1	SEC. XI ITEM NO. B1.15
COMPONENT DESCRIPTION Reactor Pressure Vessel Closure Head		EXAMINATION AREA See Comments
EQUIPMENT Pan View Camera with 10X Zoom Lens		VT-1 X VT-3
PROCEDURE NO. # 501-XXVII-22.4	REVISION 0	VIDEO TAPE NO. 4

RELEVANT CONDITIONS	LOCATION	COMMENTS
LIMITATIONS	See Comments	Examination Area Underside of Head
PHYSICAL DAMAGE	NRI	including Clad Surface and CRDM
WEAR		Guide Tubes, Cones and Penetration
CORROSION		to Head welds. All accessible areas
EROSION		Visually examined.
MISSING/LOOSE PARTS		
STRUCTURAL INTEGRITY		# SCE-RVT-575-1 R-1
MISALIGNMENT		
CRACKS		
OTHER	NRI	

COMMENTS:

None

EXAMINER / LEVEL	Joseph Bagley Lvl III		DATE 8-4-90
REVIEWED BY / LEVEL	W. Johnson Lv. III	DATE 8-6-90	AUTHORIZED INSPECTOR C. Thompson DATE 11/28/90

Reviewed Tape #4 D. Cole SCE VT L-III 8-15-90

1512/10-87

EBASCO SERVICES INCORPORATED
QUALITY ASSURANCE ENGINEERING
INSERVICE INSPECTION
RVP VT-1 / VT-3

DATA SHT NO. 90-SCE VT-002

STATION: San Onofre	UNIT NO.: 1	DATE: 7-28-90
ASME SEC. XI CLASS: 1	SECTION XI CATEGORY: IWB	SEC. XI ITEM NO.: B-N-3
COMPONENT DESCRIPTION: Reactor Pressure Vessel		EXAMINATION AREA: Core Barrel Interface
EQUIPMENT: Mini Rover MK I		VT-1: N/A VT-3: X
PROCEDURE NO.: SCE-RVT-575-1 (*)	REVISION: 1	VIDEO TAPE NO.: 1

RELEVANT CONDITIONS	LOCATION	COMMENTS
LIMITATIONS	None	Pin Located in Center of
PHYSICAL DAMAGE	NRI	Lower Core Support Plate
WEAR		
CORROSION		
EROSION		
MISSING/LOOSE PARTS		
STRUCTURAL INTEGRITY		
MISALIGNMENT		
CRACKS	NRI	
OTHER	See Comments	

COMMENTS:

Water Flow Marks Observed on Upper Alignment Keys center of Base.

(*) SOI-XXVII-22.4, REV. 0

EXAMINER / LEVEL: Joseph Bagley Lvl III			DATE: 7-30-90
REVIEWED BY / LEVEL: W.J. Johnson III	DATE: 8/1/90	AUTHORIZED INSPECTOR: C.D. Thompson	DATE: 11/28/90

Reviewed Tape #1 D. Cole SCE VT L-III 8-11-90

1612/10-87

EBASCO SERVIC[illegible] CORPORATED
QUALITY ASSURA[illegible] ENGINEERING
INSERVICE INSPECTION
RVP VT-1 / VT-3

DATA SHT NO. 90-SCE [illegible]T-006

STATION San Onofre	UNIT NO. 1	DATE 7-30-90
ASME SEC. XI CLASS 1	SECTION XI CATEGORY B-N-1	SEC. XI ITEM NO. B.1.15
COMPONENT DESCRIPTION Reactor Pressure Vessel Interior		EXAMINATION AREA Interior
EQUIPMENT Mini Rover MK I		VT-1 X VT-3 N/A
PROCEDURE NO. *501-XXVII-22.4	REVISION 0	VIDEO TAPE NO. 2

RELEVANT CONDITIONS	LOCATION	COMMENTS
LIMITATIONS	See Comments	All Accessible Areas Examined
PHYSICAL DAMAGE	NRI	1 Crescent Wrench 2 Pieces of
WEAR		Metal Located in Bottom Head
CORROSION		Items Retrieved Aug 1 and
EROSION		Aug 2, 1990
MISSING/LOOSE PARTS		Normal Amount of Loose Portical debris
STRUCTURAL INTEGRITY		*EBASCO Procedure No SCE-RVT-575-1
MISALIGNMENT		Revision 0
CRACKS	NRI	
OTHER	See Comments	

COMMENTS:

None

EXAMINER / LEVEL Joseph Bagley Lvl III DATE Aug 2, 1990

REVIEWED BY / LEVEL W. J. Johnson Lvl III DATE 8-5-90 AUTHORIZED INSPECTOR [illegible] Thompson DATE 11/28/90

Reviewed Tape #2 D. Cole SCE/VT L-III 8-11-90

1512-B/10-87

EBASCO SERVICES INCORPORATED
QUALITY ASSURANCE ENGINEERING
INSERVICE INSPECTION

DATA SHT NO. 90-SCE-VT-009

REMOTE VISUAL EXAMINATION SYSTEM
RESOLUTION VERIFICATION FORM

Station Seal Rock Unit No. 1 Date 7-30-90

System Description Mini Rover Pre-Exam - Core Barrel Vessel Int.

System capable of resolving 1/32" blackline on an 18% neutral

Gray Card: ☑ Satisfactory ☐ Unsatisfactory

Approximate Maximum Distance 2 FT

Ebasco VT Level III Approval [signature] Date 7-30-90

W.J. Johnson 8/6/90

1512-B/10-87

EBASCO SERVICES INCORPORATED
QUALITY ASSURANCE ENGINEERING
INSERVICE INSPECTION

DATA SHT NO. 90-SCE-VT-010

REMOTE VISUAL EXAMINATION SYSTEM
RESOLUTION VERIFICATION FORM

Station Seal Rock Unit No. 1 Date 7-30-90

System Description - Intermediate - Mini Rover Vessel Int.

System capable of resolving 1/32" blackline on an 18% neutral

Gray Card: ☑ Satisfactory ☐ Unsatisfactory

Approximate Maximum Distance 2 FT

Ebasco VT Level III Approval [signature] Date 7-30-90

W.J. Johnson 8/6/90

1392-1/3-84

VISUAL EXAMINATION DATA FORM VT-1

EBASCO

VISUAL EXAMINATION OF VESSEL CLOSURE HEAD WASHERS, THREADED BUSHINGS AND FLANGE LIGAMENTS

STATION	UNIT NO.	DATE
San Onofre	1	Aug 2 1990

ASME SEC XI CLASS	SYSTEM
1	RCS

ISOMETRIC OR PRINT	PROCEDURE & REV.
N/A	* SOI-XXVII-22.B Rev 0

COMPONENT DESCRIPTION: Reactor Pressure Vessel Closure Head Washers

SECTION XI CATEGORY	SECTION XI ITEM NO.	SECTION III SUBSECTION
B-G-1	B1.10	NB

EXAMINER	LEVEL
Joseph Bagley	III

VISUAL EXAM

OBSERVED CONDITION	YES	NO	REMARKS
LOOSE MEMBERS	☐	☒	
CRACKS	☐	☒	
CORROSION	☐	☒	
GOUGES	☐	☒	N/A
THREAD DAMAGE	☐	☒	
OTHER (DESCRIBE)	☐	☒	

COMMENTS AND DISPOSITION BY LEVEL II VT-1 EXAMINER: RPV Closure Head Washers Nos. 29 - 2/2 Visually Examined - No Recordable Indications -

* EBASCO Procedure No. SCE-VT-575-1

REVIEWED BY:	NAME	LEAD LEVEL II OR LEVEL III	DATE
	W. R. Johnson	W. R. Johnson Lv. III	8-5-90

AUTHORIZED INSPECTOR	DATE	DATA SHEET NO.
C. A. Thompson	11/28/90	90-SCE-VT-007

1372/5-85

EBASCO SERVICES INCORPORATED
QUALITY ASSURANCE ENGINEERING

90-SCE-MT-002

INSERVICE INSPECTION

MAGNETIC PARTICLE EXAMINATION REPORT

PROJECT	PROCEDURE	REVISION
San Onofre Unit #1	SCE-MT-575-1*	1

COMPONENT OR SYSTEM: Reactor Head Studs 29 Thru 42

METHOD: N/A DRY ☒ WET

MAGNETIZATION TECHNIQUE: ☒ YOKE ☒ COIL N/A DIRECT CONTACT

EQUIPMENT MANUFACTURER: Parker / Magnaflux

MODEL: DA-400 / L-10

SERIAL NO.: 811 / N/A

CURRENT TYPE: ☒ AC N/A DC

AMPERAGE: N/A / 12

NO. OF COIL TURNS: N/A / 10

PARTICLES' MANUFACTURER: Magnaflux (Magnaglow) BATCH #90A01K

TYPE: 14 AM

COLOR: Green

COMPONENT/WELD	INDICATION NONE	INDICATION LENGTH (INCH)	LOCATION OF INDICATION (Use Sketch Sheet if Necessary)	REMARKS
Stud -29	X	N/A		
Stud-30	X	N/A		
Stud-31	X	N/A		
Stud-32	X	N/A		
Stud-33	X	N/A		
Stud-34	X	N/A		
Stud-35	X	N/A		
Stud-36	X	N/A	N/A	
Stud-37	X	N/A		
Stud-38	X	N/A		
Stud-39	X	N/A		
Stud-40	X	N/A		
Stud-41	X	N/A		
Stud-42	X	N/A		
		N/A		
Reviewed for SCE	SD Schmidt Level III			10/01/90

EXAMINER	LEVEL	DATE
M. Orr Jr.	II	7/30/90
EXAMINER	LEVEL	DATE
[illegible]	IT	7-30-90
REVIEWED BY	REPORT NO.	DATE
W. Johnson	90-SCE-MT-002	8/1/90

*SOI-XXVII-22.1 REV. 0 C. Thompson AN11 11/28/90

6063A/1-90

EBASCO SERVICES INCORPORATED
MATERIALS TESTING AND EXAMINATION SERVICES
ULTRASONIC CALIBRATION DATA

PAGE 1 OF 1

PROJECT San Onofre Unit #1 DATA SHEET NO. 90-SCE-UT-010 DATE 7/30/90
SYSTEM Reactor Head Studs 29 thru 42 PROCEDURE SCE-UT-575-3* REV. 1

COMPONENT OR WELD IDENTIFICATION	TEMP	GAUGE ID	RECORDABLE INDICATION
Studs 29 Thru 42	76°	2048	N/A **
	N/A		
CAL BLOCK NO. 321, 322, and 323 THK 36", 21", and 6"	81°	2048	NOTCHES N/A SDH N/A

EXAM COVERAGE

N/A ID N/A OD N/A 0° WHAZ ☑ 0° BASE MATERIAL N/A AXIAL N/A CIRCUMFERENTIAL N/A SIZING ☑ OTHER FLAT BOTTOM HOLE

EQUIPMENT DATA

SEARCH UNIT

Manufacturer AeroTech
Style Gamma ☑ Single N/A Dual
Serial No. B26736
Size(s) .75" Ø Freq. 2.25 MHz
Angle 0° Mode Long.
Couplant Ultragel Batch No. 9088

INSTRUMENT

Manufacturer KrautKramer Model USK-7S
Serial No. 31459-1146 Cable Length 12'
Frequency Broad Band Reject OFF
Rep Rate Fixed Damping N/A
dB Gain: Coarse 20 (CURVE A) / 20 (CURVE B) Fine 22 (CURVE A) / 29 (CURVE B)
Primary Reference Response Amplitude - % Full Screen Height FLAT BOTTOM HOLE @ 80% FSH

DAC PLOT-TIME 1:36 AM, PM

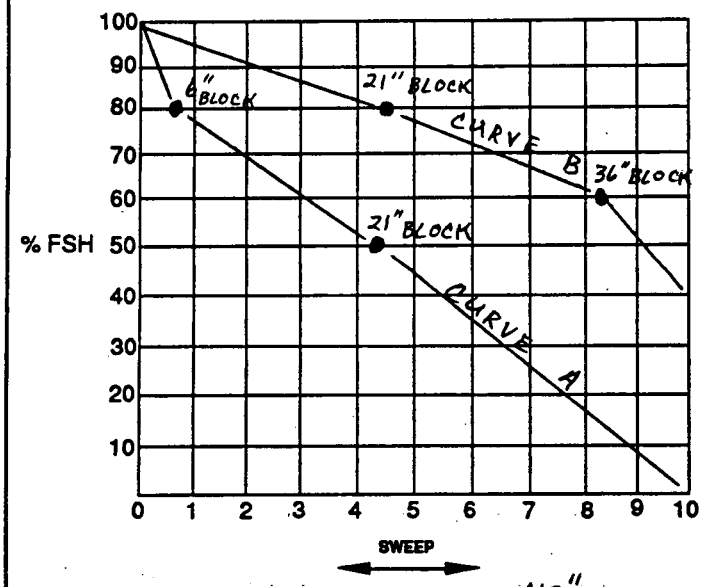

SCREEN SIZE: 40"

NOTE: *When performing examinations where no DAC is required, indicate reference reflector location and amplitude above.*

CALIBRATION CHECKS

TIME	AMPL ± 20% (dB) OF INITIAL AMPL YES	AMPL ± 20% (dB) OF INITIAL AMPL NO	SWEEP + 10% OF INITIAL LOCATION YES	SWEEP + 10% OF INITIAL LOCATION NO
FINAL 4:05 PM	✓	N/A	✓	N/A
		N/A		

EXAMINER(S):

1. M. Oriel TC-1A LEVEL II DATE 7-30-90
2. [illegible] TC-1A LEVEL I DATE 7-30-90

REVIEWED BY:

1. W. J. Johnson DATE 8/1/90
2. J. Boardman SCE UT CIII DATE 8/9/90
ANII [illegible] DATE 11/28/90

ADDITIONAL REMARKS * SOI-XXVII-22.10 REV. 0
** NO RECORDABLE INDICATIONS

SCANNED ON BOTH ENDS OF STUDS #29 THRU 42 IN ORDER TO ACHIEVE 100% COVERAGE.

1372/5-85

EBASCO SERVICES INCORPORATED
QUALITY ASSURANCE ENGINEERING

INSERVICE INSPECTION

MAGNETIC PARTICLE EXAMINATION REPORT

PROJECT	PROCEDURE	REVISION
SAN ONOFRE UNIT #1	SCE-MT-575-1*	1

COMPONENT OR SYSTEM: REACTOR CLOSURE HEAD NUTS

METHOD: N/A DRY ☑ WET

MAGNETIZATION TECHNIQUE: ☑ YOKE N/A COIL N/A DIRECT CONTACT

EQUIPMENT MANUFACTURER: PARKER RESEARCH

MODEL: DA-400

SERIAL NO.: 811

CURRENT TYPE: ☑ AC N/A DC

AMPERAGE: N/A

NO. OF COIL TURNS: N/A

PARTICLES' MANUFACTURER: MAGNAFLUX (MAGNAGLO) BATCH # 90A01K

TYPE: 14AM

COLOR: GREEN

COMPONENT/WELD	INDICATION NONE	INDICATION LENGTH (INCH)	LOCATION OF INDICATION (Use Sketch Sheet if Necessary)	REMARKS
NUTS #29 THRU 42	✓	N/A	N/A	MT ON OD SURFACE
N/A	N/A	↓	↓	AND END SURFACES
↓	↓	↓	↓	ONLY.
			N A	
Reviewed for SCE		G.C. Schmidt Level III		10/01/90

EXAMINER	LEVEL	DATE
M. Orik Jr.	II	7/29/90
EXAMINER: Robert J. Ward	LEVEL: II	DATE: 7/29/90
REVIEWED BY: J.N. Johnson	REPORT NO.: 90-SCE-MT-001	DATE: 8-5-90

*SOI XXVII-22.1 REV. 0

Thompson AN II 11/28/90

6059/4-76

EBASCO SERVICES INCORPORATED
QUALITY ASSURANCE ENGINEERING

INSERVICE INSPECTION SKETCH SHEET

LINE AND WELD(S) RPV NUTS #29 → 42

DATE 7/29/90

EXAMINER M. ORIHUELA, JR.

PROJECT SAN ONOFRE UNIT 1

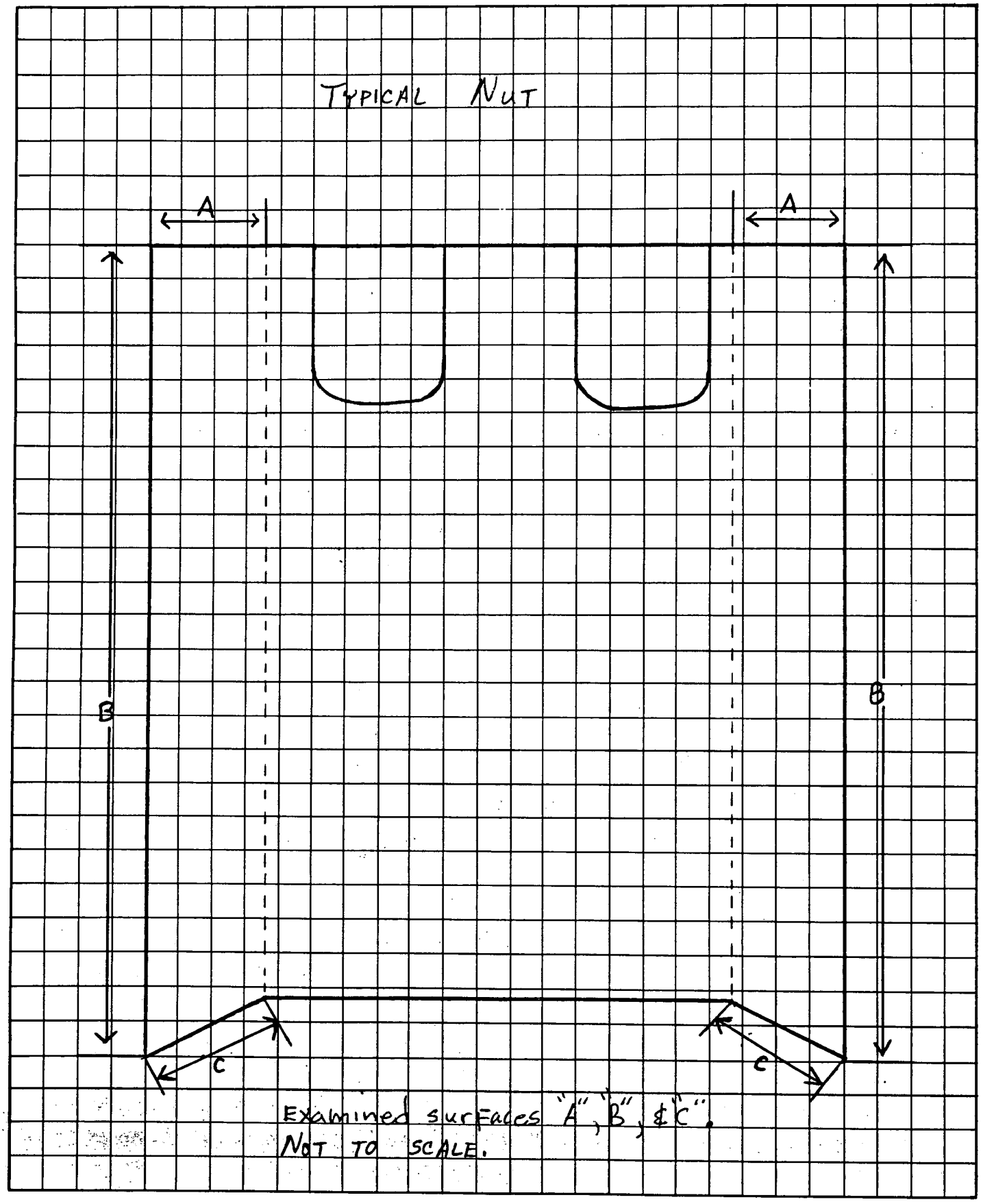

6063A/1-90

EBASCO SERVICES INCORPORATED
MATERIALS TESTING AND EXAMINATION SERVICES
ULTRASONIC CALIBRATION DATA

PAGE 1 OF 1

PROJECT SAN ONOFRE UNIT #1 DATA SHEET NO. 90-SCE-UT-011 DATE 8/2/90

SYSTEM REACTOR CLOSURE HEAD PROCEDURE SOI-XXVII-22.10 REV. TCN 0-1

COMPONENT OR WELD IDENTIFICATION	TEMP	GAUGE ID	RECORDABLE INDICATION
NUTS #29 THRU 42	82°F	2048	NONE.
	N		
		A	
CAL BLOCK NO. ROMPAS #800893 THK 1"	80°F	2048	NOTCHES N/A SDH N/A

EXAM COVERAGE

N/A ID N/A OD N/A 0° WHAZ ☑ 0° BASE MATERIAL N/A AXIAL N/A CIRCUMFERENTIAL N/A SIZING N/A OTHER N/A

EQUIPMENT DATA

SEARCH UNIT

Manufacturer KB-AEROTECH
Style GAMMA ☑ Single N/A Dual
Serial No. B26736
Size(s) 0.75" Ø Freq. 2.25 MHz
Angle 0° Mode LONG.
Couplant ULTRAGEL Batch No. 9088

INSTRUMENT

Manufacturer KRAUTKRAMER Model USK-7S
Serial No. 31459-1146 Cable Length 6' BNC-BNC
Frequency BROADBAND Reject OFF
Rep Rate FIXED Damping N/A
dB Gain: Coarse 20 Fine 35
Primary Reference Response Amplitude - % Full Screen Height 1ST BACK REFLECTION @ 80% FSH

DAC PLOT-TIME 2:30 AM, (PM)

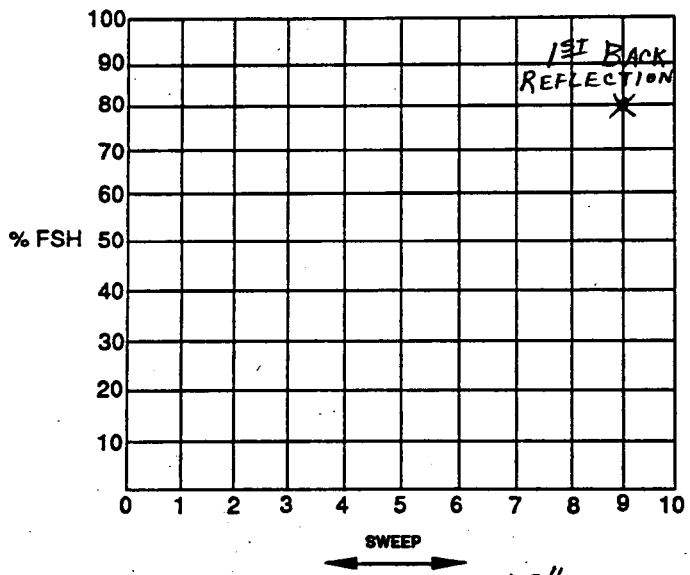

SCREEN SIZE: 10"

NOTE: *When performing examinations where no DAC is required, indicate reference reflector location and amplitude above.*

CALIBRATION CHECKS

	AMPL ± 20% (dB) OF INITIAL AMPL		SWEEP + 10% OF INITIAL LOCATION	
TIME	YES	NO	YES	NO
3:05PM	✓	N/A	✓	N/A
		N		
		A		

EXAMINER(S):

1. M. Oriel TC-1A LEVEL II DATE 8/2/90
2. N/A TC-1A LEVEL N/A DATE N/A

REVIEWED BY:

1. W. Johnson III DATE 8-5-90
2. D. Boardman SCE LIII DATE 11/20/90

ANII O. Thompson DATE 11/28/90

ADDITIONAL REMARKS SCANNED ON TOP SURFACE OF NUTS #29 THRU 42. CALIBRATION PER ADDENDA No. 1 OF EBASCO PROCEDURE No. SCE-UT-575-1, REV. 1.

Rockwell International
Rocketdyne Division

SUPPORTING DOCUMENT

GO NO.	S/A NO.	PAGE 1 OF	TOTAL PAGES	REV LTR/CHG NO. SEE SUMMARY OF CHG	NUMBER
71029	20020	355	360	New/1	204DP000003

PROGRAM TITLE
San Onofre Nuclear Generating Station (SONGS) Unit 1 Reactor Vessel Inservice Inspection

DOCUMENT TITLE
Manual Ultrasonic, Magnetic Particle, Liquid Penetrant, Visual and Loop A Automated Ultrasonic Data

DOCUMENT TYPE
Data Package

KEY NOUNS
ISI, RPV, NDT, SONGS

ORIGINAL ISSUE DATE
12-14-90

REL. DATE
2-14-91 LC

APPROVALS
J. M. Harris

DATE
12/10/90

PREPARED BY/DATE
RA Marshall 12/10/90
R. A. Marshall

DEPT
635

MAIL ADDR
T009

IR&D PROGRAM? YES ☐ NO ☒
IF YES, ENTER TPA NO.

DISTRIBUTION

*	NAME	MAIL ADDR
	E. Baumeister	HB15
	R. Fuhrer	T039
	R. B. Hardy	T009
*	J. M. Harris	T009
	P. H. Horton	T020
	W. R. Johnson	T009
	C. H. Knox	T009
	R. A. Marshall	T009
	R. M. Mucica	HA02
	B. Pilling	T038
	C. D. Richards	HB18
*	E. Sank (2)	HA02

ABSTRACT

This document contains the following examination data:

1. Manual Ultrasonic (MUT)
2. Magnetic Particle (MT)
3. Liquid Penetrant (PT)
4. Visual (VT)
5. Automated Ultrasonic (AUT) data from the Loop A reactor vessel inlet and outlet nozzles

ORIGINAL

RESERVED FOR PROPRIETARY/LEGAL NOTICES

* COMPLETE DOCUMENT
NO ASTERISK, TITLE PAGE/SUMMARY OF CHANGE PAGE ONLY

FORM 734-C REV. 12-84

REV	SUMMARY OF CHANGE	APPROVALS AND DATE
	CHANGE NO. 1 Add ligament examination data, pages 20.1 and 20.2 Add linearity checks, pages 29.1 and 29.2 Release Date 2/14/91	RA Marshall 2/14/91 2/14/91 2/14/91

ROCKWELL INTERNATIONAL
INSERVICE INSPECTION
MANUAL ULTRASONIC
CALIBRATION DATA

PROJECT SONGS UNIT 1 Cycle 11
CAL. DATA SHEET NO. 1 DATE 2-4-91
PROCEDURE SO1-XXVII-20.7 REV. 0
TCN 0-1

COMPONENT OR SYSTEM REACTOR VESSEL FLANGE PIPE OD (If Applicable) N/A
EXAM DATA SHEET NO. 1 COMPONENT TEMP 86°F.
CALIBRATION BLOCK NO. UT #8 THICK 9" TEMP 65°F.

SCAN COVERAGE

FLANGE LIGAMENT AREA - STUD HOLES 29 TO 42

☐ 0° WHAZ ☒ 0° BASE MATERIAL ☐ AXIAL ☐ CIRCUMFERENTIAL

SEARCH UNIT

Manufacture NORTEC
Style PN V-Z-12-2.25
Serial No. 6285
Size 3/4" Dia Frequency 2.25 MHz
Angle 0° Mode "L" WAVE

INSTRUMENT

Manufacture KB Model USK-6
Serial No. C109179 Cable Length 12'
Frequency 2.25 MHz Delay 8
Rep Rate X1 Range 9
dB Gain-Coarse 0 Fine 10
Primary Reference 3" Drop Hole

Primary Reference Response
Amplitude % Full Screen Height 82 %

Couplant ULTRAGEL II Batch No. 8439

DAC PLOT - TIME AM, ~~PM~~ 10:30

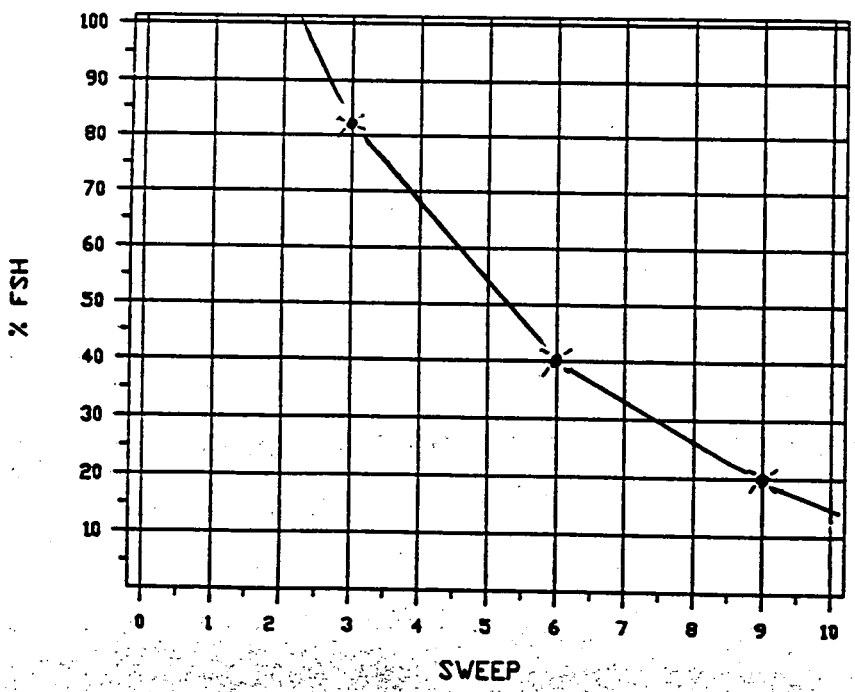

CALIBRATION CHECKS

	AMPL ±20%(2dB) OF INITIAL AMPL		SWEEP ±10% OF INITIAL LOCATION	
TIME	YES	NO	YES	NO
1300	✓		✓	

EXAMINER(S)
1. [signature] Level III
2. [signature] Level III

REVIEWED BY [signature] DATE 2-6-91

REVIEWED: [signature] SCE UT III 3/1/91
[signature] ANII 3/8/91

ROCKWELL INTERNATIONAL
INSERVICE INSPECTION
MANUAL ULTRASONIC EXAMINATION DATA

PROJECT SONGS UNIT 1 cycle 11
EXAM DATA SHEET NO. 1
CAL. DATA SHEET NO. 1 DATE 2-4-91
PROCEDURE SOI-XXVII-20.7 REV. 0
TCN 0-1

WELD OR COMPONENT IDENTIFICATION	RECORDABLE INDICATION		COMMENTS OR REFERENCE TO INDICATION DATA SHEET
	YES	NO	
FLANGE LIGAMENT AREA AROUND STUD THREADED HOLE NO.			
29		✓	No Reportable Indications
30		✓	
31		✓	
32		✓	C H Knapp Level III
33		✓	2-4-91
34		✓	
35		✓	
36		✓	
37		✓	
38		✓	
39		✓	
40		✓	
41		✓	
42		✓	

REVIEWED: J S Boardman SCE UT III 3/1/91
AN 11 3/8/91
W J Johnson 2-6-91

ISI-201 REV 2/89

LINEARITY CALIBRATION CHECK SHEET

PRE EXAM (Ligament)

PROJECT SONGS UNIT 1

SER NO. USK 6
ANNEL NO. S/N C109/79

SCREEN HEIGHT LINEARITY					
AMPLITUDE					
	1/2 T	3/4 T		1/2 T	3/4 T
1	100	50	5	40	20
2	80	40	6	32	16
3	64	32	7	24	12
4	50	25	8	19	9

AMPL. CONTROL LINEARITY			
INIT.	db	RESULT	LIMITS
80	-6	40	32-48%
80	-12	19	16-24%
40	+6	80	64-96%
20	+12	82	64-96%

PULSER NO. ______
CHANNEL NO. ______

SCREEN HEIGHT LINEARITY					
AMPLITUDE					
	1/2 T	3/4 T		1/2 T	3/4 T
1			5		
2			6		
3			7		
4			8		

AMPL. CONTROL LINEARITY			
INIT.	db	RESULT	LIMITS
80	-6		32-48%
80	-12		16-24%
40	+6		64-96%
20	+12		64-96%

PULSER NO. ______
CHANNEL NO. ______

SCREEN HEIGHT LINEARITY					
AMPLITUDE					
	1/2 T	3/4 T		1/2 T	3/4 T
1			5		
2			6		
3			7		
4			8		

AMPL. CONTROL LINEARITY			
INIT.	db	RESULT	LIMITS
80	-6		32-48%
80	-12		16-24%
40	+6		64-96%
20	+12		64-96%

LSER NO. ______
IANNEL NO. ______

SCREEN HEIGHT LINEARITY					
AMPLITUDE					
	1/2 T	3/4 T		1/2 T	3/4 T
1			5		
2			6		
3			7		
4			8		

AMPL. CONTROL LINEARITY			
INIT.	db	RESULT	LIMITS
80	-6		32-48%
80	-12		16-24%
40	+6		64-96%
20	+12		64-96%

PULSER NO. ______
CHANNEL NO. ______

SCREEN HEIGHT LINEARITY					
AMPLITUDE					
	1/2 T	3/4 T		1/2 T	3/4 T
1			5		
2			6		
3			7		
4			8		

AMPL. CONTROL LINEARITY			
INIT.	db	RESULT	LIMITS
80	-6		32-48%
80	-12		16-24%
40	+6		64-96%
20	+12		64-96%

PULSER NO. ______
CHANNEL NO. ______

SCREEN HEIGHT LINEARITY					
AMPLITUDE					
	1/2 T	3/4 T		1/2 T	3/4 T
1			5		
2			6		
3			7		
4			8		

AMPL. CONTROL LINEARITY			
INIT.	db	RESULT	LIMITS
80	-6		32-48%
80	-12		16-24%
40	+6		64-96%
20	+12		64-96%

APPROVAL SIGNATURES

07:50

EXAMINER Richards LEVEL III DATE Feb 4, 1991

REVIEWERS J. Johnson DATE 2-6-91

______ DATE ______

Reviewed J. Boardman SCE UT III 3/1/91 ISI 130

[illegible] ANII 3/8/91

LINEARITY CALIBRATION CHECK SHEET

Post Ligament EXAM

PROJECT SONGS UNIT 1

SER NO. USK6
ANNEL NO. SN C109/79

SCREEN HEIGHT LINEARITY

AMPLITUDE

	1/2 T	3/4 T		1/2 T	3/4 T
1	100	50	5	40	20
2	80	40	6	32	16
3	64	32	7	24	12
4	50	25	8	20	10

AMPL. CONTROL LINEARITY

INIT.	db	RESULT	LIMITS
80	-6	40	32-48%
80	-12	20	16-24%
40	+6	80	64-96%
20	+12	80	64-96%

PULSER NO.
CHANNEL NO.

SCREEN HEIGHT LINEARITY

AMPLITUDE

	1/2 T	3/4 T		1/2 T	3/4 T
1			5		
2			6		
3			7		
4			8		

AMPL. CONTROL LINEARITY

INIT.	db	RESULT	LIMITS
80	-6		32-48%
80	-12		16-24%
40	+6		64-96%
20	+12		64-96%

PULSER NO.
CHANNEL NO.

SCREEN HEIGHT LINEARITY

AMPLITUDE

	1/2 T	3/4 T		1/2 T	3/4 T
1			5		
2			6		
3			7		
4			8		

AMPL. CONTROL LINEARITY

INIT.	db	RESULT	LIMITS
80	-6		32-48%
80	-12		16-24%
40	+6		64-96%
20	+12		64-96%

LSER NO.
IANNEL NO.

SCREEN HEIGHT LINEARITY

AMPLITUDE

	1/2 T	3/4 T		1/2 T	3/4 T
1			5		
2			6		
3			7		
4			8		

AMPL. CONTROL LINEARITY

INIT.	db	RESULT	LIMITS
80	-6		32-48%
80	-12		16-24%
40	+6		64-96%
20	+12		64-96%

PULSER NO.
CHANNEL NO.

SCREEN HEIGHT LINEARITY

AMPLITUDE

	1/2 T	3/4 T		1/2 T	3/4 T
1			5		
2			6		
3			7		
4			8		

AMPL. CONTROL LINEARITY

INIT.	db	RESULT	LIMITS
80	-6		32-48%
80	-12		16-24%
40	+6		64-96%
20	+12		64-96%

PULSER NO.
CHANNEL NO.

SCREEN HEIGHT LINEARITY

AMPLITUDE

	1/2 T	3/4 T		1/2 T	3/4 T
1			5		
2			6		
3			7		
4			8		

AMPL. CONTROL LINEARITY

INIT.	db	RESULT	LIMITS
80	-6		32-48%
80	-12		16-24%
40	+6		64-96%
20	+12		64-96%

APPROVAL SIGNATURES

13:50
EXAMINER LEVEL II DATE Feb. 4, 199
REVIEWERS J.J. John DATE 2-6-91
DATE

REVIEWED: J Boardman SOS UT III 3/1/91 ISI 130

REACTOR COOLANT SYSTEM
PRESSURIZER

INDEX: 1.1.2
SKETCH/ISO: 1-30A

ITEM	NDE PROCESS	DATE	CODE CATEGORY	REMARKS
CLADDING	VISUAL	7/07/90	B-I-2/B2.9	

WESTINGHOUSE NUCLEAR SERVICE DIVISION
INSPECTION SERVICES

VISUAL EXAMINATION DATA

PLANT SAN ONOFRE UNIT 1 SKETCH ISI-1-30A

SYST/COMP PRESSURIZER (I.D) PROCEDURE S01-W-ISI-8/0

EXAMINER James R. Delbusso DATE 7-7-90
LEVEL II

IDENT. NUMBER	RESULTS			VISUAL AIDS	REMARKS
	NI	NRI	RI		
ID SURFACES	X			ELMIRA CAMERA AND LIGHTS	NO SIGNS OF DEGRADATION OR LOSS OF INTEGRITY ON CLADDED SURFACE. VHS TAPE INCLUDED.
					Reviewed: J J Boardman VT II SCE 11/29/90

FORM 45934B

August 30, 1990

MEMORANDUM FOR FILE

SUBJECT: Verification of Pressurizer Integrity
San Onofre Nuclear Generating Station, Unit 1

The purpose of this memorandum is to transmit the results of the visual examination performed on the interior clad surface of the San Onofre Unit 1 Pressurizer on July 7, 1990.

Southern California Edison Company was notified in early June of the results of internal visual inspection of the pressurizer at the Haddam Neck plant. In the inspection, the licensee, Connecticut Yankee Atomic Power Company, discovered a multitude of hairline cracks in the cladding in the vicinity of the lower head. Further examinations from the outside indicated the possibility that three of the cracks penetrated through the cladding into the pressurizer base metal. One of these three indications required detailed analysis to satisfy ASME Code requirements for resolution.

As the San Onofre Unit 1 pressurizer design is very similar to the Haddam Neck pressurizer, an internal inspection of the clad surface in the lower head area was performed during the current Thermal Shield repair outage. This inspection also satisfied the inservice inspection requirements of the ASME Code, Section XI, Inspection Category B-I-2, "Interior Clad Surfaces of Vessels Other Than Reactor Vessels", which requires that at least one clad patch of 36 square inches be visually examined each inspection interval.

On July 7, 1990, with the unit in Mode 5, a remote visual inspection of the internal surfaces of the Unit 1 pressurizer was performed. The areas examined were the lower head in the vicinity of the surge nozzle, numerous heater penetration welds, the upper and lower heater support plate, and the accessible regions of the vessel wall between the heater support plates. No evidence of clad cracking was noted. A videotape record of the inspection was made during its performance. A copy of the videotape of the examination was furnished to the USNRC personnel during a visit to San Onofre on July 10, 1990. These results are documented on Westinghouse examination data sheet ISI-1-30A dated 07/07/90 (copy attached), and verified by the SCE NQC inspector as documented on Inspection Report IW-003-90 dated 07/17/90 (copy attached).

In conclusion, the integrity of the San Onofre Unit 1 Pressurizer, as evidenced by visual internal examination, is satisfactory, and no further action is required.

J. D. Boardman
ISI Engineer

cc: J. A. Mundis
R. Ornelas
M. E. Motamed
J. D. Boardman
R. P. Delong
SSSD Files

WESTINGHOUSE NUCLEAR SERVICE DIVISION
INSPECTION SERVICES

VISUAL EXAMINATION DATA

PLANT SAN ONOFRE UNIT 1 SKETCH ISI-1-30A

SYST/COMP PRESSURIZER (I.D) PROCEDURE S01-W-ISI-8/0

EXAMINER James R. Dellbusso DATE 7-7-90
LEVEL II

IDENT. NUMBER	RESULTS			VISUAL AIDS	REMARKS
	NI	NRI	RI		
ID SURFACES	X			ELMIRA CAMERA AND LIGHTS	NO SIGNS OF DEGRADATION OR LOSS OF INTEGRITY ON CLADDED SURFACE. VHS TAPE INCLUDED.

FORM 45934B

Southern California Edison Company
SAN ONOFRE NUCLEAR GENERATING STATION

INSPECTION REPORT

Report No. IW-003-90

Page 1 of 1

Supplier: N/A

Purchase Order No.: N/A

Unit No.: 1 Quality Class: SR

Inspection Date: 7/17/90 Time: 1300 - 1400

Component Description: PRESSURIZER, LOWER HEAD INTERNAL SURFACE

Work Order No.: N/A

Section XI Traveler No.: N/A

Equip. Tag/Serial No.: N/A

Procedure No.: N/A

Location: CONTAINMENT

Reference Drawing No.: N/A

Contact/Dept.: JOHN BOARDMAN SSSD

NCR: N/A CAR: N/A DCP: N/A

REPORT SUMMARY THE PURPOSE OF THIS INSPECTION REPORT IS TO DOCUMENT OBSERVATIONS NOTED DURING REVIEW OF THE "CLADDING INSPECTION VIDEO" TAKEN 7/11/90 OF THE UNIT 1 PRESSURIZER LOWER HEAD INTERNAL CLAD SURFACE, AS REQUESTED BY JOHN BUTCHER, SITE SERVICES DEPT. THE PRIMARY TASKING WAS TO OBSERVE FOR CONDITIONS OF CRACKING. THE FOLLOWING OBSERVATIONS WERE MADE AND THEIR CORRESPONDING FILM LOCATIONS REFERENCED BY FRAME NUMBERS AS SEQUENCED ON THE TV MONITOR.

1. ALTHOUGH THE VIDEO FILM DEFINITION WAS CLOUDED IN SOME SEGMENTS, NO AREAS OF SURFACE CRACKING WERE NOTED.

2. GRINDING MARKS ON THE CLAD SURFACE (APPEARING SHALLOW IN DEPTH) WERE NOTED IN VIDEO FRAMES 603, 609-613, 720-729 AND 787-805.

3. MINOR SURFACE PITTING / ROUGHNESS NOTED THROUGHOUT SURFACE AREA.

4. BORIC ACID RESIDUE NOTED ON STRENGTH MEMBER IN VIDEO FRAMES 913-945

5. BROKEN INSPECTION LIGHT TIP NOTED LAYING ON PLATE SURFACE IN FRAME 957.

Distribution:
HOWARD NEWTON
B. KATZ
DL STONECIPHER/QC FILE
DA. HERBST
JOHN BUTCHER
JOHN BOARDMAN
CDM

Inspected By: [signature] Date: 7/17/90 Stamp No.: 63

Approved By: [signature] Date: 7-18-90

"...SEEKING CLARIFICATION, ATTENTION TO DETAIL..."SURVEILLANCE"..."WITH"..."FORTHRIGHTNESS...," Mr. Howard P. Allen's Letter, March 26, 1985.

SCE 26-162-1 REV 4/86

REACTOR COOLANT SYSTEM
REACTOR COOLANT PUMP "C"

INDEX: 1.2.1
SKETCH/ISO: 1-5100A, 1-5100B & 15100C

ITEM	NDE PROCESS	DATE	CODE CATEGORY	REMARKS
C-1	VISUAL	*******	B-L-1/B5.6	CASING WELD (VOLUMETRIC WAIVED, INSTEAD PERFORM VT2 PER RELIEF REQUEST OF DOCKET 50-206)
C-2	VISUAL	*******	B-L-1/B5.6	CASING WELD (VOLUMETRIC WAIVED, INSTEAD PERFORM VT2 PER RELIEF REQUEST OF DOCKET 50-206)
C-3	VISUAL	*******	B-L-1/B5.6	CASING WELD (VOLUMETRIC WAIVED, INSTEAD PERFORM VT2 PER RELIEF REQUEST OF DOCKET 50-206)
CASING INTERNAL PRESSURE BOUNDARY SURFACES	VISUAL	8/28/90	B-L-2/B5.7	
C-B1 thru C-B18	MUT	8/16/90	B-G-1/B5.2	
C-B1 thru C-B18	MT	8/22/90	B-G-1/B5.2	
C-1WS	PT	8/18/90	B-K-1/B5.4	PUMP SUPPORT (VOLUMETRIC WAIVED, INSTEAD PERFORM PT PER RELIEF REQUEST OF DOCKET 50-206)

REACTOR COOLANT SYSTEM
REACTOR COOLANT PUMP "C"

INDEX: 1.2.1
SKETCH/ISO: 1-5100B

ITEM	NDE PROCESS	DATE	CODE CATEGORY	REMARKS
C-2WS	PT	8/18/90	B-K-1/B5.4	PUMP SUPPORT (VOLUMETRIC WAIVED, INSTEAD PERFORM PT PER RELIEF REQUEST OF DOCKET 50-206)
C-3WS	PT	8/18/90	B-K-1/B5.4	PUMP SUPPORT (VOLUMETRIC WAIVED, INSTEAD PERFORM PT PER RELIEF REQUEST OF DOCKET 50-206)

PUMP CASING

APPENDIX D

UNDERWATER TELEVISION SYSTEM RESOLUTION

CHECKOUT DATA SHEET

LEVEL II: JAMES R DELBUSSO

DATE: 8-27-90

PLANT: SAN ONOFRE UNIT 1

T.V. CAMERA: ELMIRA ETV-1250 WEM 02475

T.V. MONITOR: PANASONIC WV5360

T.V. LIGHTS: 1 PENCIL LIGHT

VIDEO TAPE RECORDER: PANASONIC NV 8200 E1001

RESOLUTION STANDARD: 1/32" BLACK LINE ON 18% NEUTRAL GRAY CARD

RESOLUTION STANDARD

	APPROXIMATE DEPTH	APPROXIMATE DISTANCE	APPROXIMATE ANGLE (DEGREES)	ACCEPTABLE
1.	4'	6"	0°	YES
2.				
3.				
4.				

James R. Delbusso 8-27-90

LEVEL II - SIGNATURE/DATE

APPENDIX C (continued)

VISUAL EXAMINATION REPORT

VT 1 AND 3

DESCRIPTION SONGS RCP #C CASING INSP. DATE 8-28-90

UNIT 1 SYSTEM/COMPONENT RCP - C EXTERNAL AND INTERNAL CASING

LOCATION PUMP "C"

REFERENCE DOCUMENT APPENDIX B

APPLICABLE PROCEDURES/SPECS/DWGS S01-XXVII-3.11

ITEM	VT #	PARAMETERS REQ	PARAMETERS ACT	RESULTS RC	RESULTS NRC	REMARKS
THE CASING INTERIOR,	3	N/A	N/A		X	VIDEO TAPED
DIFFUSER, AND SUCTION						
NOZZLE WERE VT-3						
INSPECTED TO THE						
EXTENT POSSIBLE						
IN ACCORDANCE WITH						
ASME SECTION XI, 1974,						
SUMMER 1975 ADDENDUM						
AS MODIFIED BY NRC						
DOCKET 50-206 LETTER						
OF RELIEF DATED 9-26-79.						
SATISFIES REQUIREMENTS						
OF SECTION XI, ITEM						
B5.6, CATAGORY						
B-L-1, ITEM B5.7						
CATAGORY B-L-2						

EXAMINER Robert W. Bingham LEVEL II DATE 8-27-90

REVIEWED BY _____ LEVEL _____ DATE _____

ANII _____ DATE _____

SCE Review: J Boardman 6/14/91 VT Level II

ANII: A Thompson 6/14/91

THE APPEARANCE OF LINEAR TYPE INDICATION, REFERENCE TAPE INDEX 1900, IN MY OPINION ARE COMBINATION OF DARKENED FABRICATION, MACHINING, ETC MARKS WHICH ARE NON-REVEALANT AND NOT DETERMENTAL.

James R. Dallenbach
(W) LEVEL II
9-2-90

SCE REVIEW: J J Boardman 6/14/91
VT Level II

ANII: C D Thompson 6/14/91

WESTINGHOUSE NUCLEAR SERVICE DIVISION
INSPECTION SERVICES

VISUAL EXAMINATION DATA

PLANT SAN ONOFRE UNIT 1 SKETCH ISI-1-5100

SYST/COMP REACTOR COOLANT PUMP CASING 'C' PROCEDURE SO1-W-ISI-8/0

EXAMINER James R. Delbusso LEVEL II DATE 8-28-90

VT-3

IDENT. NUMBER	RESULTS NI	RESULTS NRI	RESULTS RI	VISUAL AIDS	REMARKS
'C' PUMP	X			HALOGEN LIGHTING	EXAMINED ALL ACCESSIBLE
CASING INTERIOR					AREAS. NO SIGNS OF
					CAVITATION, EROSION, OR ANY
					DEGRADATION. ABLE TO SEE
					FABRICATION MARKS. WATER
					COMPLETELY DRAINED.
					SCE Review: J Boardman 6/14/91
					VT Level II
					ANII A Thompson 6/14/91

FORM 45934B

WESTINGHOUSE NUCLEAR SERVICE DIVISION
INSPECTION SERVICES

VISUAL EXAMINATION DATA

PLANT SAN ONOFRE UNIT 1 SKETCH ISI-1-5100

SYST/COMP REACTOR COOLANT PUMP CASING "C" O.D. PROCEDURE SO1-W-ISI-8/0

EXAMINER James R. Delbusso LEVEL II DATE 8-29-90

VT-1

IDENT. NUMBER	RESULTS NI	NRI	RI	VISUAL AIDS	REMARKS
C-1	X			FLASHLIGHT	
					SCE Review J Boardman 6/14/91
					VT Level II
					ANII C Thompson 6/14/91

FORM 45934B

PUMP CASING 'C'
SUCTION NOZZLE
(RE-EXAM)

APPENDIX D
UNDERWATER TELEVISION SYSTEM RESOLUTION
CHECKOUT DATA SHEET

LEVEL II: ROBERT WM. HUGHES

DATE: 9-3-90

PLANT: SAN ONOFRE UNIT #1

T.V. CAMERA: ELMIRA ETV-1250

T.V. MONITOR: PANASONIC WV-5360 9" BLACK/WHITE

T.V. LIGHTS: 2-400 QUARTZ LIGHTS 4" x 6" FACE

VIDEO TAPE RECORDER: PANASONIC NV8200 E1001

RESOLUTION STANDARD: 1/32" BLACK LINE ON 18% NEUTRAL GRAY CARD

RESOLUTION STANDARD

	APPROXIMATE DEPTH	APPROXIMATE DISTANCE	APPROXIMATE ANGLE (DEGREES)	ACCEPTABLE
1.	6 FT	4" TO 6"	45°	YES
2.				
3.				
4.				

Robert Wm. Hughes 9-3-90
LEVEL II - SIGNATURE/DATE

WESTINGHOUSE NUCLEAR SERVICE DIVISION
INSPECTION SERVICES

VISUAL EXAMINATION DATA

PLANT SAN ONOFRE UNIT 1 SKETCH IST-1-5100

SYST/COMP RCP-'C' SUCTION NOZZLE PROCEDURE SO1-W-IST-8/0

EXAMINER [signature] LEVEL II DATE 9-3-90

VT-3

IDENT. NUMBER	RESULTS NI	NRI	RI	VISUAL AIDS	REMARKS
PUMP 'C' 100% OF SUCTION NOZZLE INTERIOR SURFACES	X			QUARTZ LIGHT	RE-EXAMINED RCP-'C' SUCTION NOZZLE AREA. NO SIGNS OF ANY DEGRADATION, EROSION, OR CAVITATION. ABLE TO SEE COMPLETE SUSPECTED AREA OF INTEREST. COVERAGE OF SUCTION NOZZLE WAS 100%. WATER WAS COMPLETELY DRAINED FOR VISUAL INSPECTION (WAS VIDEO TAPED 9-3-90)

FORM 45934B

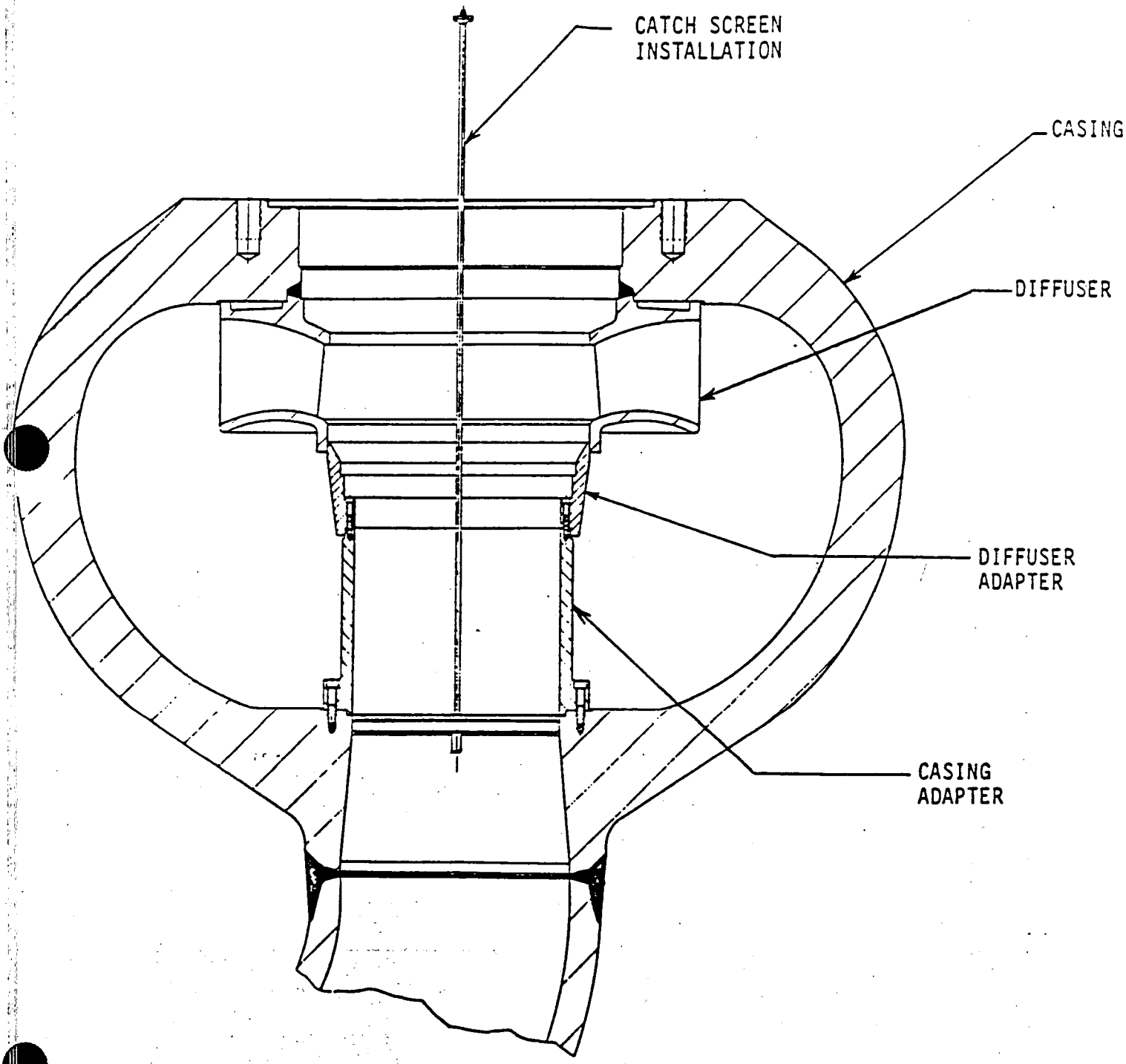
CATCH SCREEN
INSTALLATION
CASING
DIFFUSER
DIFFUSER
ADAPTER
CASING
ADAPTER

Figure E.1

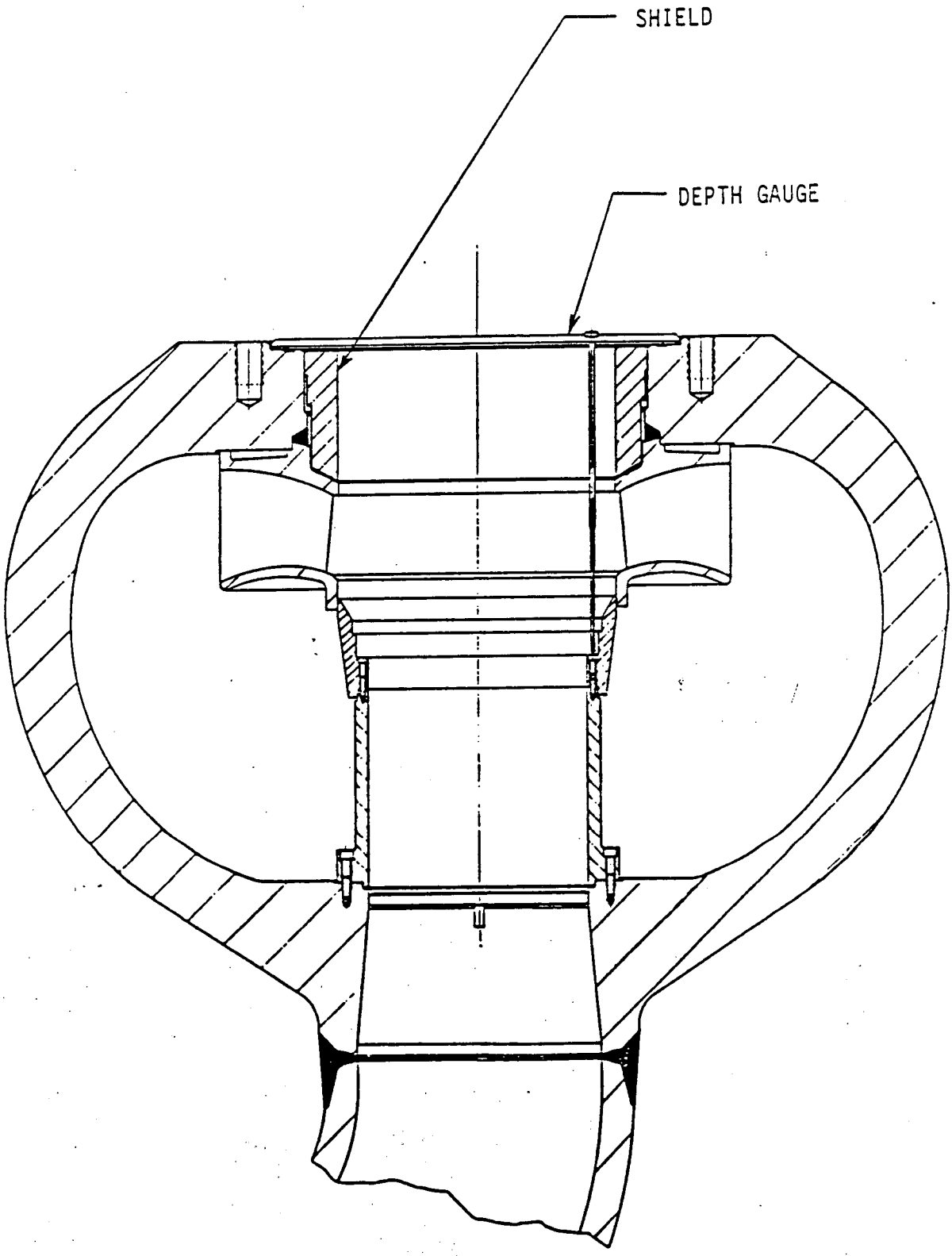

Figure E.2

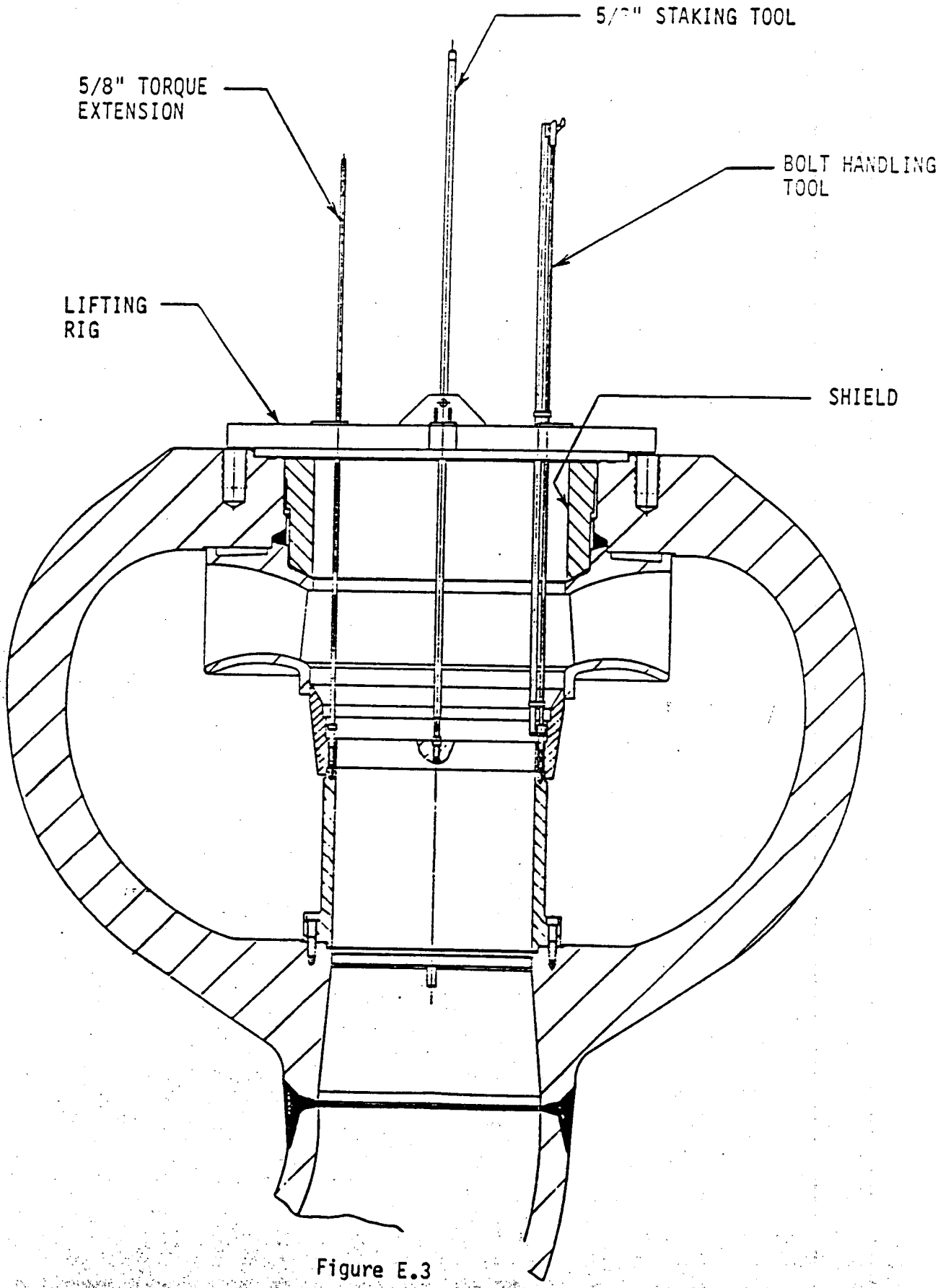
5/8" STAKING TOOL
5/8" TORQUE EXTENSION
BOLT HANDLING TOOL
LIFTING RIG
SHIELD

Figure E.3

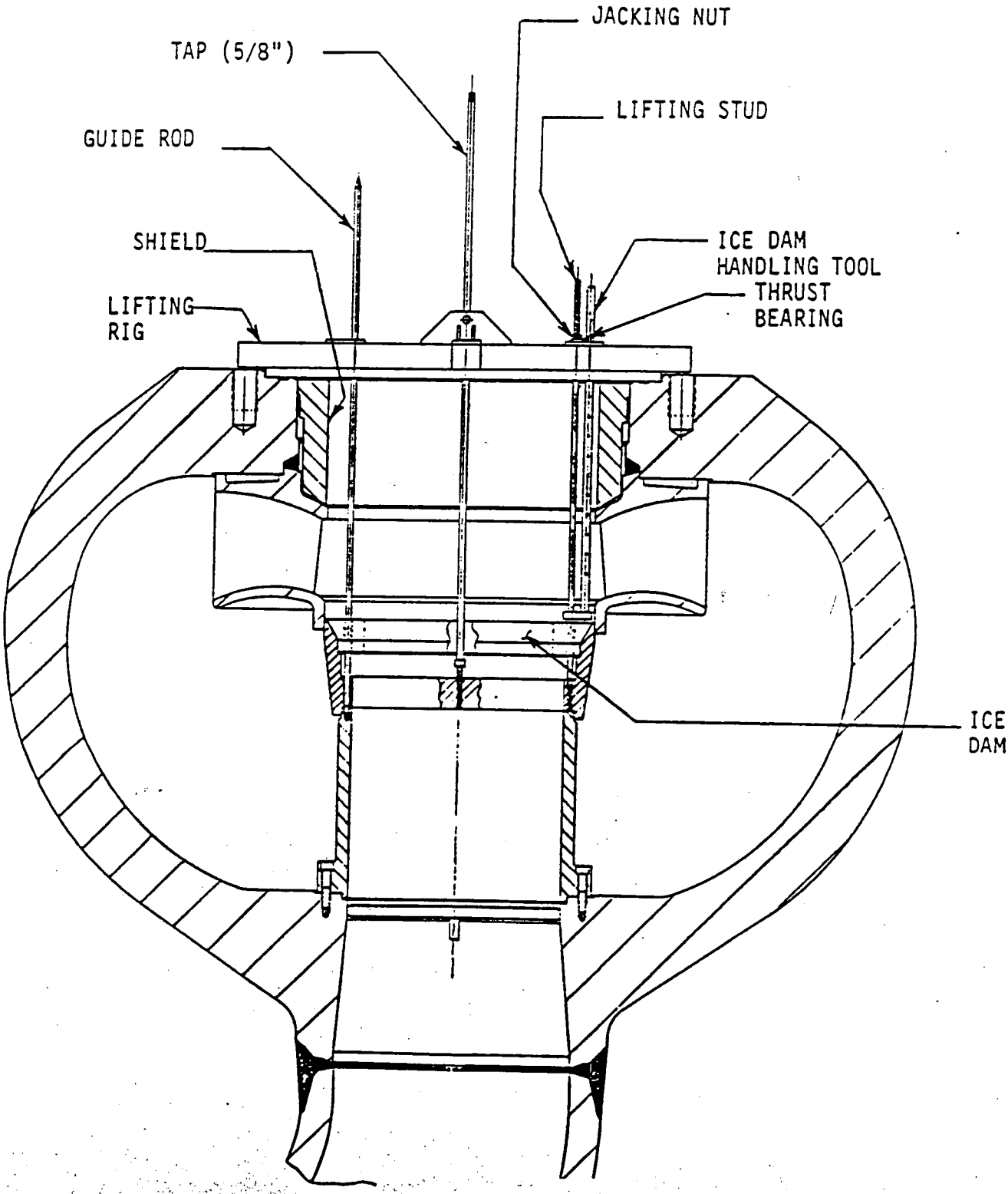
JACKING NUT
TAP (5/8")
LIFTING STUD
GUIDE ROD
SHIELD
ICE DAM
HANDLING TOOL
THRUST
BEARING
LIFTING
RIG
ICE
DAM

Figure E.4

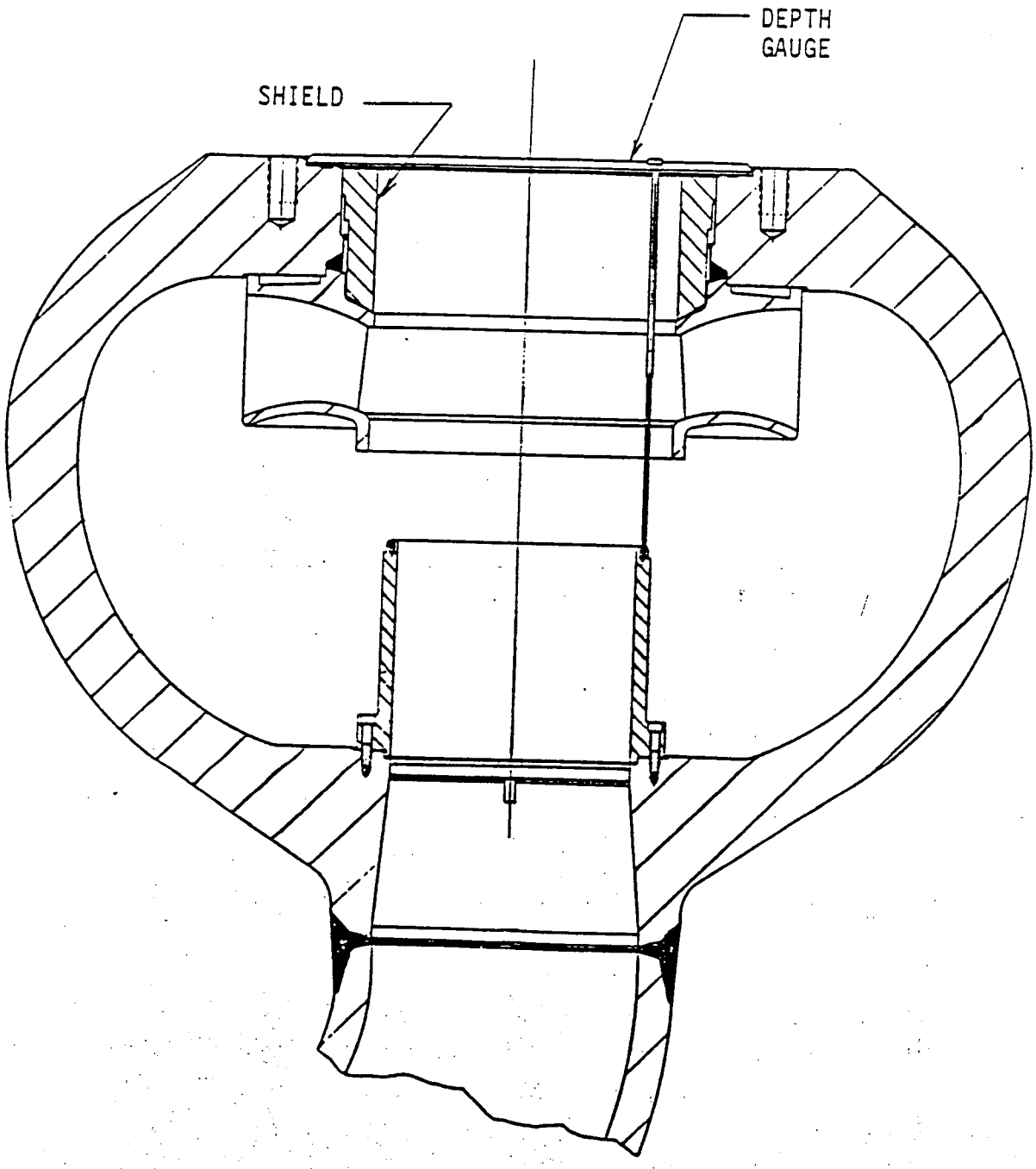

Figure E.5

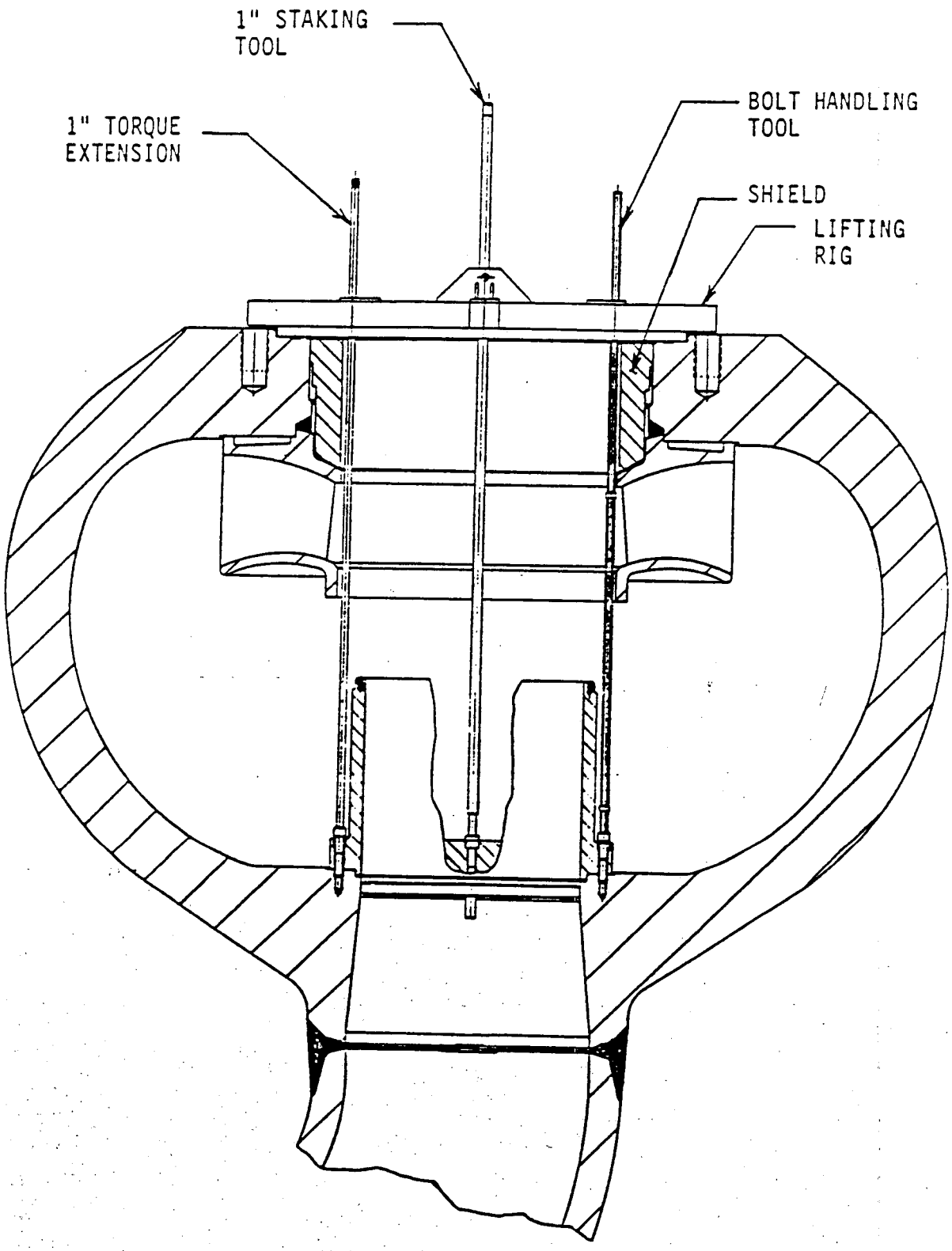
1" STAKING TOOL
1" TORQUE EXTENSION
BOLT HANDLING TOOL
SHIELD
LIFTING RIG

Figure E.6

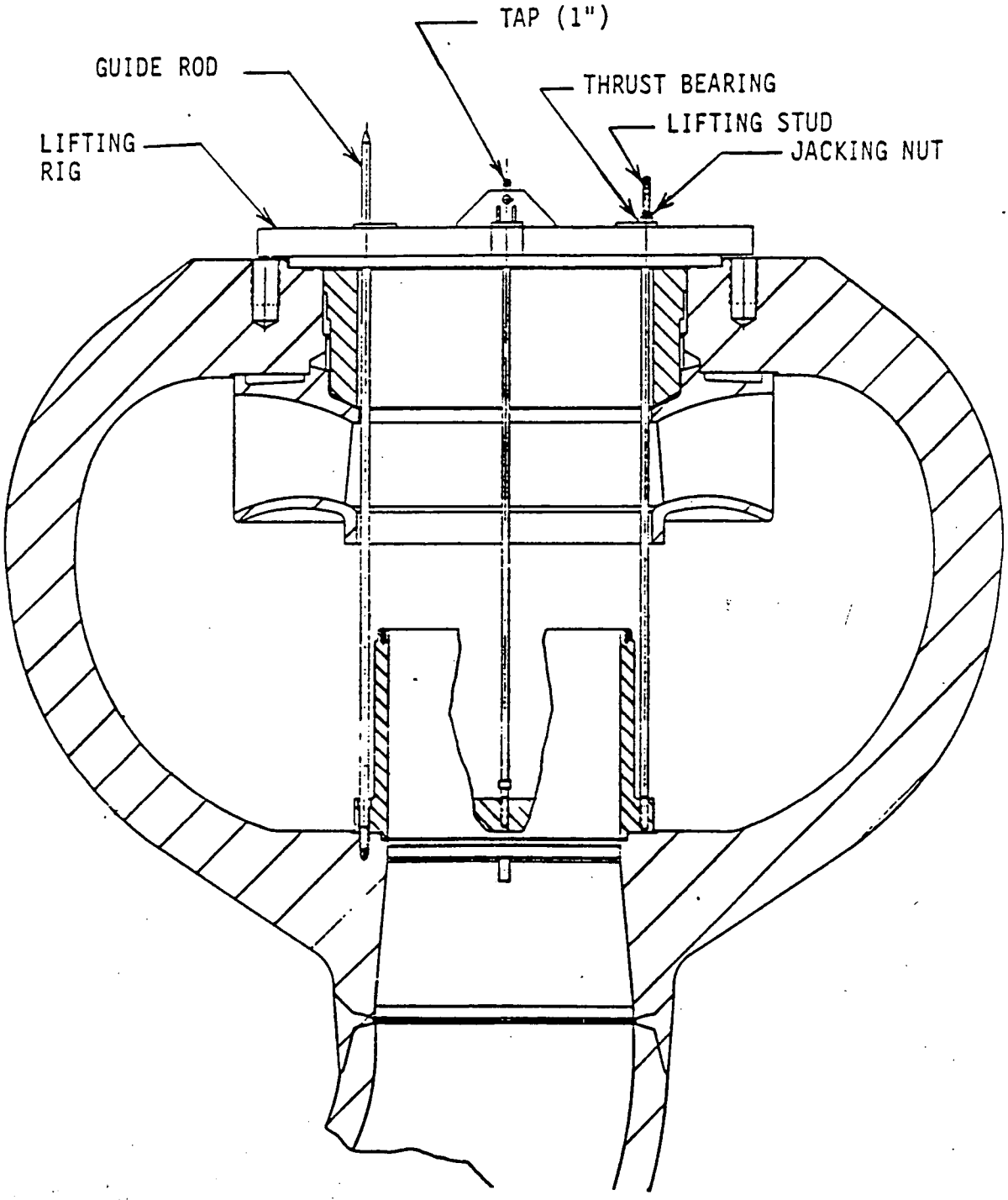
TAP (1")
GUIDE ROD
THRUST BEARING
LIFTING STUD
LIFTING RIG
JACKING NUT

Figure E.7

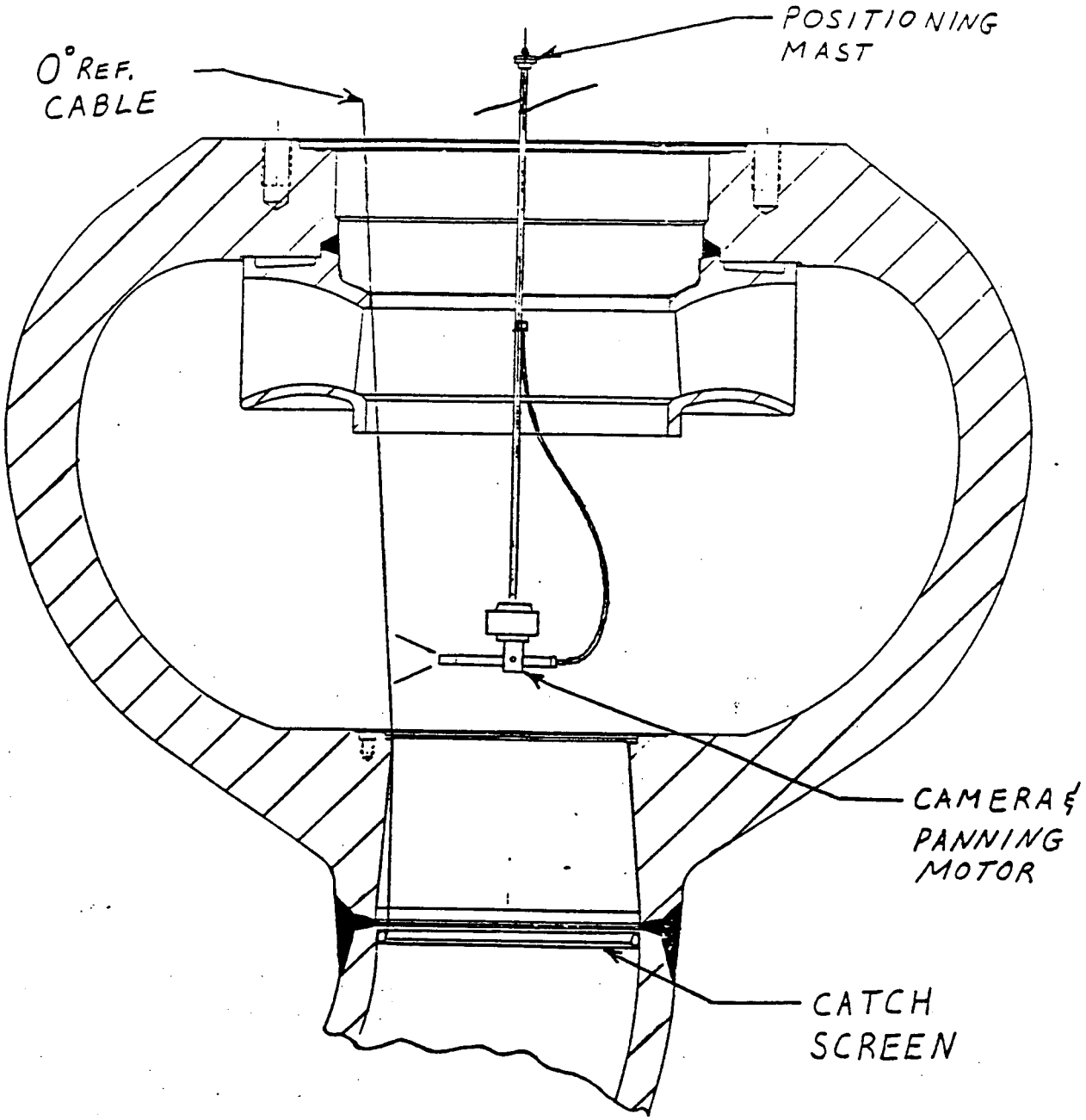
POSITIONING MAST
0° REF. CABLE
CAMERA & PANNING MOTOR
CATCH SCREEN

Figure E.8

WESTINGHOUSE NUCLEAR SERVICE DIVISION
INSPECTION SERVICES
STUDS, BOLTS AND NUTS
ULTRASONIC EXAMINATION REPORT

DATE 8-22-90

PROCEDURE S01-W-ISI-8/0
S01-W-ISI-15/0

OPERATOR James R. Dellusso

SKETCH NO. ISI-1-5100

PLANT SAN ONOFRE UNIT 1 LOOP 'C' COMPONENT SEAL HOUSING BOLTING RC PUMP

EQUIPMENT

INSTRUMENT

IDENTITY SONIC MARK 1, SN 11362E

SONOTRACE 40 BATCH # 8767

TRANSDUCER

SIZE 0.375"

FREQ. 2.25 MHZ

SERIAL NO. D25604

CALIBRATION

NUTS, STUDS, BOLTS LESS THAN 4" DIA. BACK SURFACE SIGNAL 80 % F.S.H.

STUDS, BOLTS 4" DIA. AND GREATER CALIBRATION BLOCK NO. _____

CURVE "A"

FIRST SIGNAL FROM HOLE _____ % F.S.H.

SECOND SIGNAL FROM HOLE _____ % F.S.H.

CURVE "B"

SECOND SIGNAL _____ % F.S.H.

THIRD SIGNAL _____ % F.S.H.

FOURTH SIGNAL _____ % F.S.H.

CALIBRATION CHECKS 1435 1516 ____ ____

FIFTH SIGNAL _____ % F.S.H.

SIXTH SIGNAL _____ % F.S.H.

SEVENTH SIGNAL _____ % F.S.H.

EIGHTH SIGNAL _____ % F.S.H.

EXAMINATION RESULTS

ITEM NUMBER	RESULTS NRI	RESULTS RI	COMMENTS	VIS. ISI-8 SAT	VIS. ISI-8 UNSAT
C-B1 THRU	X		LIGHT NICKS AND LIGHT PITTING	X	
C-B18			ON ALL BOLTS		

LEGEND: NRI NO REPORTABLE INDICATIONS
RI REPORTABLE INDICATIONS

Reviewed: J. Boardman 8/10/90
SCE UT LIII
D. Thompson ANII 3/8/91

WESTINGHOUSE NUCLEAR SERVICE DIVISION
INSPECTION SERVICES

SURFACE EXAMINATION DATA

PLANT SAN ONOFRE UNIT 1 SKETCH ISI-1-5100

SYST/COMP. REACTOR COOLANT PUMP 'C' PROCEDURE SO1-W-ISI-11/0 TCN-0-1

EXAMINER James R. Dellrusso LEVEL II DATE 8-18-90

P/T		BATCH NOS.
CLEANER	MAGNAFLUX	89K03S
PENETRANT	MAGNAFLUX	89K04K
DEVELOPER	MAGNAFLUX	89L02P
REMOVER	MAGNAFLUX	89K03S

M/T

EQUIPMENT

EXAM. MEDIUM

BLACK-LIGHT CHECK TIME

IDENT. NUMBER	RESULTS NI	NRI	RI	REMARKS
C-1WS		X		
C-2WS		X		
C-3WS		X		
				Reviewed: J. Boardman SCE LIII 11/20/90
				C. Thompson AN11 3/8/91

FORM 45935C

WESTINGHOUSE NUCLEAR SERVICE DIVISION
INSPECTION SERVICES

SURFACE EXAMINATION DATA

PLANT SAN ONOFRE UNIT 1 SKETCH ISI-1-5100

SYST/COMP. SEAL HOUSING BOLTING 'C' REACTOR COOLANT PUMP PROCEDURE TCN-0-1 SO1-W-ISI-70/0

EXAMINER James R. Delbrusso LEVEL II DATE 8-22-90

P/T	BATCH NOS.
CLEANER	
PENETRANT	
DEVELOPER	
REMOVER	

M/T

EQUIPMENT MAGNAFLUX L-10 COIL, SN W04673
MAGNAFLUX Y-6 YOKE, SN W04670
MAGNAFLUX ZB 27 BLACKLIGHT, SN WEM 04727
MAGNAFLUX MPFI

EXAM. MEDIUM MAGNAFLUX 14AM BATCH # 90E01P

BLACK-LIGHT CHECK TIME 0940, 1131, 1309

IDENT. NUMBER	RESULTS NI	NRI	RI	REMARKS
C-B1 THRU	X			
B18				

FORM 45935C

ULTRASONIC INSTRUMENTATION DATA SHEET

VERTICAL LINEARITY

"A"		"B"
7.7	10	1.30
6.9	9	1.30
6.1	8	1.31
5.3	7	1.32
4.6	6	1.30
3.8	5	1.32
3.1	4	1.29
2.3	3	1.30
1.5	2	1.33
0.7	1	1.43
9	8	8 ÷ 9

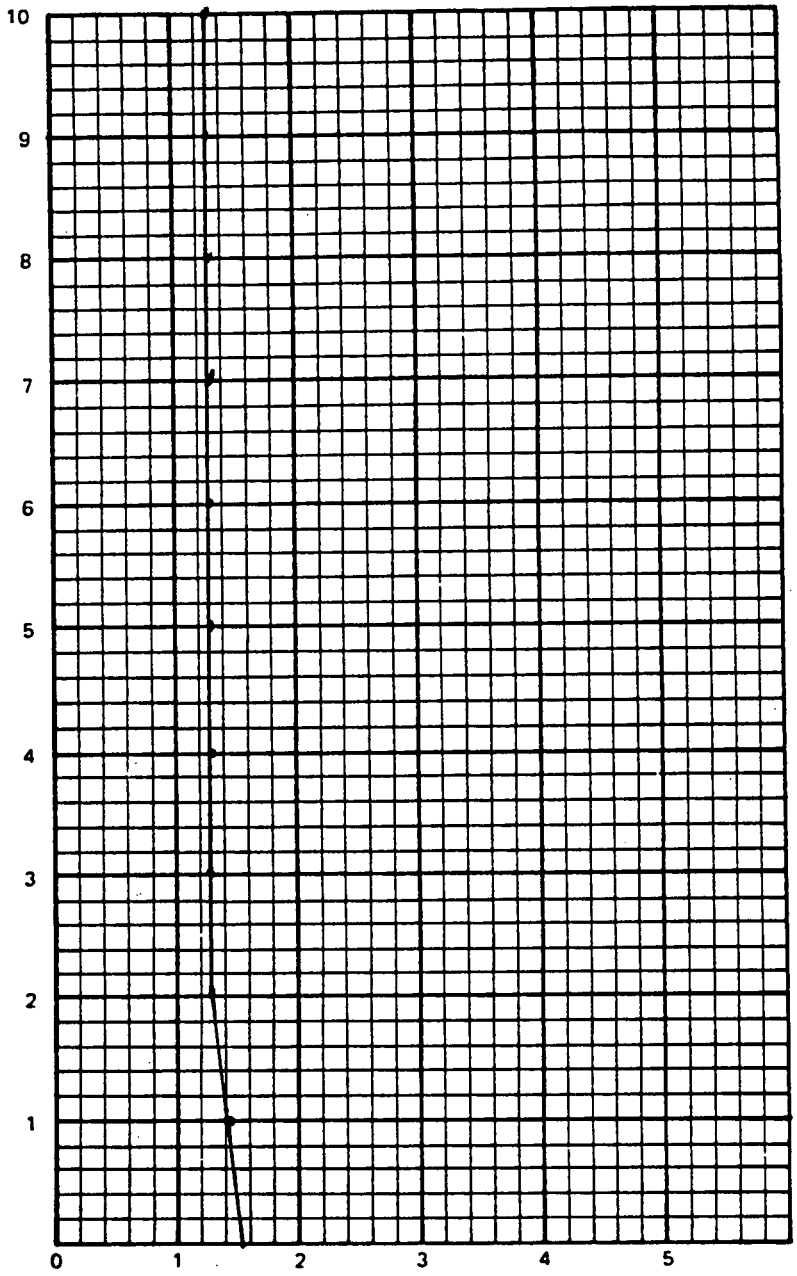

INSTRUMENT: MFR. SONIC MODEL MARK 1 S/N 11362E

TRANSDUCER: MFR. AEROTECH SIZE 1.0" FREQ. 2.25 MHZ S/N C26671

TEST PERFORMED BY James R. Delbrugg REVIEWED BY James R. Delbrugg

LINEARITY IS: ☒ ACCEPTABLE ☐ UNACCEPTABLE DATE 8-16-90

REMARKS:

F49004 Reviewed: J. Boardman 10/10/90
SCE UT LIII
[illegible] 3/8/91

ULTRASONIC INSTRUMENTATION DATA SHEET

HORIZONTAL LINEARITY

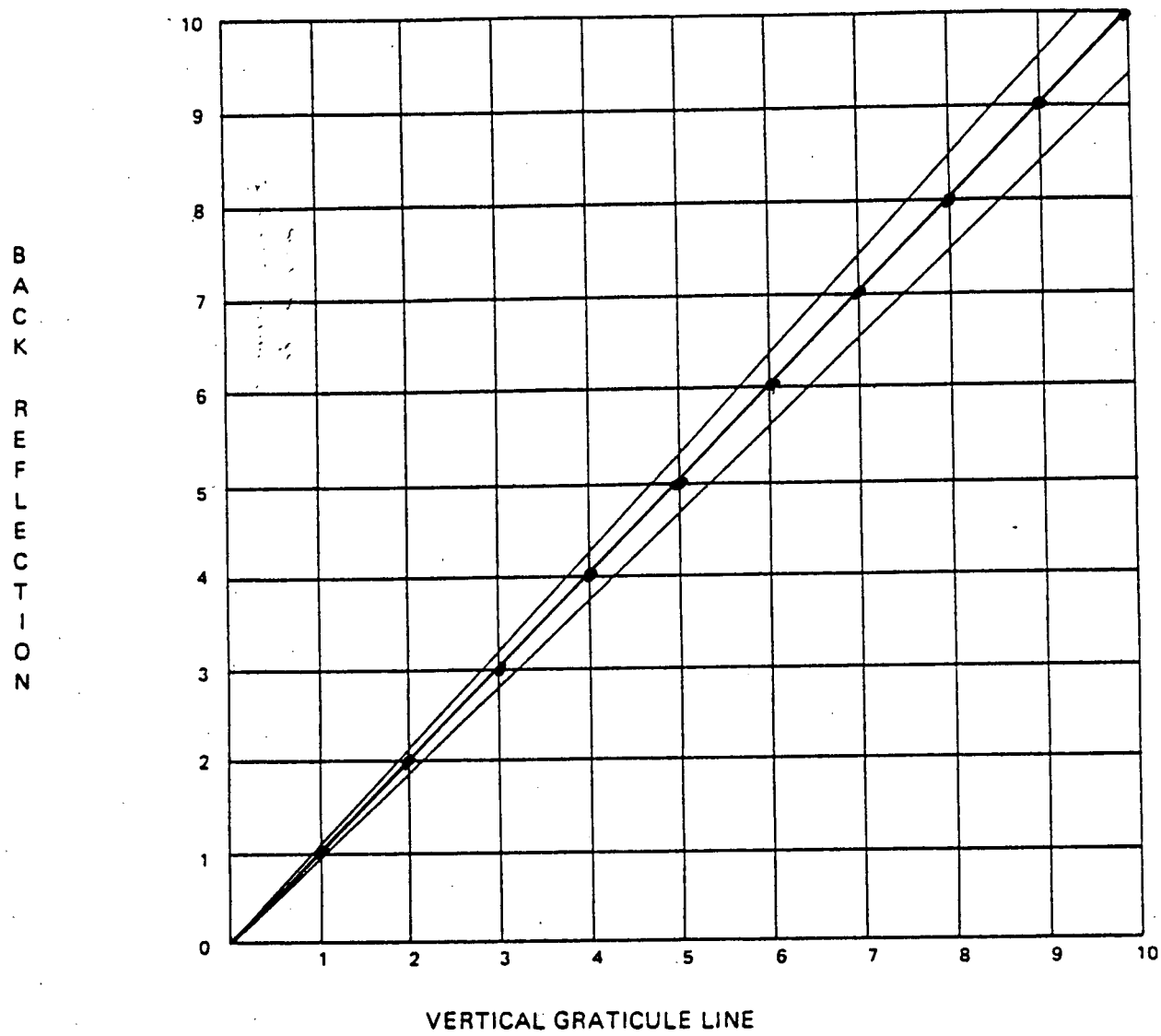

INSTRUMENT: MFR. SONIC MODEL MARK 1 S/N 11362E

TRANSDUCER: MFR. AEROTECH SIZE 1.0" FREQ. 2.25MHZ S/N C26671

TEST PERFORMED BY James R. Delbrugg REVIEWED BY James R. Delbrugg

LINEARITY IS: ☒ ACCEPTABLE ☐ UNACCEPTABLE DATE 8-16-90

REMARKS:

F 49006

Reviewed: J. Boardman SCE UT LIII 10/10/90 C. Thompson 3/8/91

MAIN STEAM SYSTEM
HEADER SAFETIES & RELIEFS

INDEX: 2.1
SKETCH/ISO: 2-19A-1 & 2-19A-2

ITEM	NDE PROCESS	DATE	CODE CATEGORY	REMARKS
PBP-253	UT	7/14/90	C-G/C2.1	AUGMENTED ISI-POSTULATED BREAK POINTS IN HIGH ENERGY LINES
PBP-254	UT	7/14/90	C-G/C2.1	AUGMENTED ISI-POSTULATED BREAK POINTS IN HIGH ENERGY LINES
PBP-263	UT	7/14/90	C-G/C2.1	AUGMENTED ISI-POSTULATED BREAK POINTS IN HIGH ENERGY LINES
PBP-264	UT	7/14/90	C-G/C2.1	AUGMENTED ISI-POSTULATED BREAK POINTS IN HIGH ENERGY LINES

6063A/1-90

EBASCO SERVICES INCORPORATED
MATERIALS TESTING AND EXAMINATION SERVICES
ULTRASONIC CALIBRATION DATA

PAGE 1 OF 1

PROJECT SAN ONOFRE UNIT #1 DATA SHEET NO. 90-SCE-UT-001 DATE 7/14/90
SYSTEM MAIN STEAM PROCEDURE SCE-UT-S75-1 ① REV. 1

COMPONENT OR WELD IDENTIFICATION	TEMP	GAUGE ID	RECORDABLE INDICATION
REDUCER TO VALVE # CV-76 PBP-253	76°	2046	NO RECORDABLE INDICATIONS
REDUCER TO VALVE # CV-77 PBP-263	76°	2046	NO RECORDABLE INDICATIONS
REDUCER TO VALVE # CV-78 PBP-254	76°	2046	NO RECORDABLE INDICATIONS
REDUCER TO VALVE # CV-79 PBP-264	76°	2046	NO RECORDABLE INDICATIONS
10-5-90			
CAL BLOCK NO. UT-48 THK .562"			NOTCHES N/A SDH N/A

EXAM COVERAGE

N/A ID N/A OD ☒ 0° WHAZ ☒ 0° BASE MATERIAL ☒ AXIAL N/A CIRCUMFERENTIAL N/A SIZING N/A OTHER N/A

EQUIPMENT DATA

SEARCH UNIT

Manufacturer K.B. AEROTECH
Style GAMMA HP ☒ Single N/A Dual
Serial No. G13724
Size(s) .50" Freq. 2.25 MHZ
Angle 0° Mode LONG
Couplant ULTRAGEL II Batch No. 9088

INSTRUMENT

Manufacturer KRAUTKRAMER BRANSON Model USL-48
Serial No. 213620 Cable Length 6'
Frequency 2.25 Reject OFF
Rep Rate FIXED Damping FIXED
dB Gain: Coarse * Fine *
Primary Reference Response Amplitude - % Full Screen Height BACKWALL AT 75% FSH

DAC PLOT-TIME 0935 (AM), PM

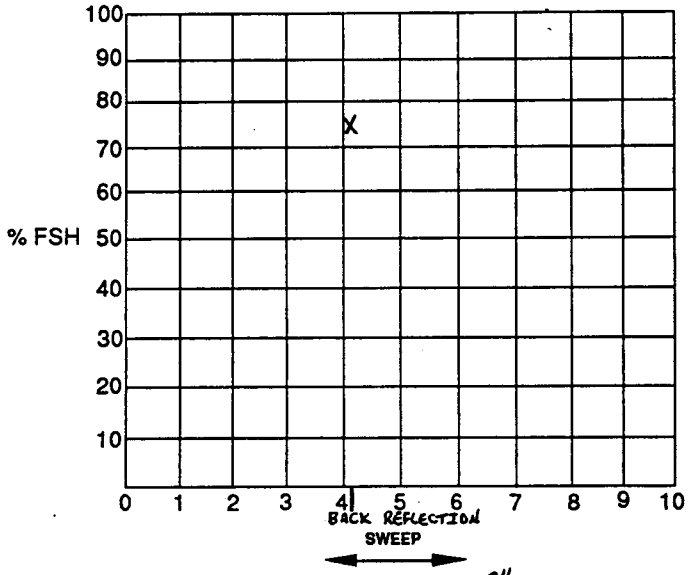

SCREEN SIZE: 2" OF METAL PATH

NOTE: *When performing examinations where no DAC is required, indicate reference reflector location and amplitude above.*

CALIBRATION CHECKS

TIME	AMPL ± 20% (dB) OF INITIAL AMPL YES	AMPL ± 20% (dB) OF INITIAL AMPL NO	SWEEP + 10% OF INITIAL LOCATION YES	SWEEP + 10% OF INITIAL LOCATION NO
FINAL 1205 PM	X	N/A	X	N/A
		N	A	

EXAMINER(S):

1. Steve Spindler TC-1A LEVEL II DATE 7/14/90
2. [signature] TC-1A LEVEL I DATE 7/14/90

REVIEWED BY:

1. M. O'Neil Jr. DATE 7/16/90
2. [signature] Lv III DATE 7-28-90

ANII [signature] DATE 11/28/90

ADDITIONAL REMARKS ① S01-XXVII-22.7 REV. 0
* MAINTAINED 50% TO 75% FSH BACK REFLECTION
REDUCER TO VALVE CONFIGURATION - REDUCER SIDE EXAM ONLY

Reviewed [signature] Boardman SCE UT LIII 8/6/90

6063A/1-90

EBASCO SERVICES INCORPORATED
MATERIALS TESTING AND EXAMINATION SERVICES
ULTRASONIC CALIBRATION DATA

PAGE 1 OF 1

PROJECT SAN ONOFRE UNIT #1 DATA SHEET NO. 90-SCE-UT-002 DATE 7/14/90
SYSTEM MAIN STEAM PROCEDURE SCE-UT-575-2 ① REV. 1

COMPONENT OR WELD IDENTIFICATION	TEMP	GAUGE ID	RECORDABLE INDICATION
REDUCER TO VALVE # CV 76 PBP-253	76°	2046	NO RECORDABLE INDICATIONS
REDUCER TO VALVE # CV 77 PBP-263	76°	2046	NO RECORDABLE INDICATIONS
REDUCER TO VALVE # CV 78 PBP-254	76°	2046	NO RECORDABLE INDICATIONS
REDUCER TO VALVE # CV 79 PBP-264	76°	2046	NO RECORDABLE INDICATIONS
JMJ 10-9-90			
CAL BLOCK NO. UT-48 THK .562"			NOTCHES N/A SDH ☒

EXAM COVERAGE

N/A ☐ ID N/A ☐ OD N/A ☐ 0° WHAZ N/A ☐ 0° BASE MATERIAL N/A ☐ AXIAL ☒ CIRCUMFERENTIAL N/A ☐ SIZING N/A ☐ OTHER N/A

EQUIPMENT DATA

SEARCH UNIT

Manufacturer K.B. AEROTECH
Style GAMMA ☒ Single N/A ☐ Dual
Serial No. B09724
Size(s) .50" ROUND Freq. 2.25 MHZ
Angle 45° Mode SHEAR
Couplant ULTRAGEL II Batch No. 9088

INSTRUMENT

Manufacturer KRAUTKRAMER BRANSON Model USK-7S
Serial No. 31458-2838 Cable Length 6'
Frequency BROAD BAND Reject OFF
Rep Rate FIXED Damping FIXED
dB Gain: Coarse 20 Fine 6
Primary Reference Response Amplitude - % Full Screen Height 1/2T AT 75% FSH

DAC PLOT-TIME 0945 (AM) PM

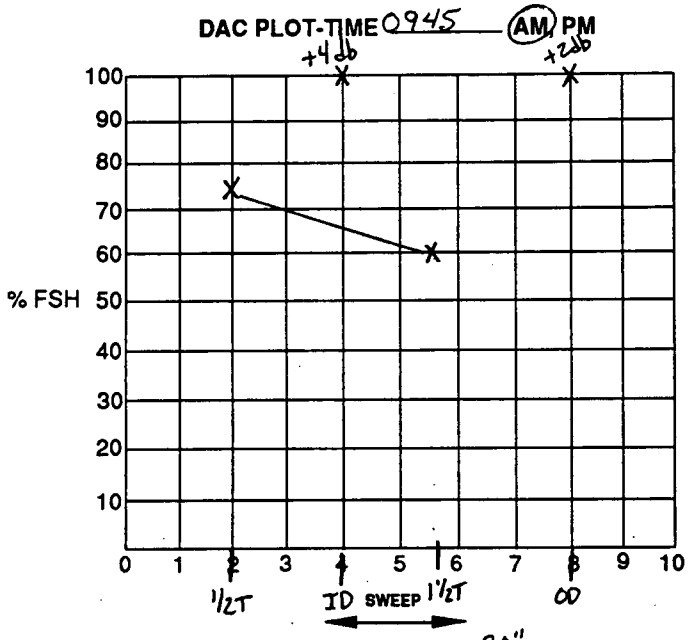

SCREEN SIZE: 2.0" OF METAL PATH

NOTE: *When performing examinations where no DAC is required, indicate reference reflector location and amplitude above.*

CALIBRATION CHECKS

TIME	AMPL ± 20% (dB) OF INITIAL AMPL: YES	AMPL ± 20% (dB) OF INITIAL AMPL: NO	SWEEP + 10% OF INITIAL LOCATION: YES	SWEEP + 10% OF INITIAL LOCATION: NO
FINAL 1210 PM	X	N/A	X	N/A

EXAMINER(S):

1. Steve Spindler TC-1A LEVEL II DATE 7/14/90
2. J. Spilde TC-1A LEVEL I DATE 7/14/90

REVIEWED BY:

1. M. Orril Jr. DATE 7/16/90
2. W. Johnson III DATE 7/28/90

ANII Ed Thompson DATE 11/28/90

ADDITIONAL REMARKS ① S01-XXVII-22.7 REV. 0
REDUCER TO VALVE CONFIGURATION - REDUCER SIDE EXAM ONLY

Reviewed: J. Boardman SCE UT LIII 8/6/90

6063A/1-90

EBASCO SERVICES INCORPORATED
MATERIALS TESTING AND EXAMINATION SERVICES
ULTRASONIC CALIBRATION DATA

PAGE 1 OF 3

PROJECT San Onofre Unit #1 DATA SHEET NO. 90-SCE-UT-003 DATE 7-14-90
SYSTEM Main Steam PROCEDURE SCE-UT-575-1 * REV. 1

COMPONENT OR WELD IDENTIFICATION	TEMP	GAUGE ID	RECORDABLE INDICATION
Reducer to Valve #CV76 PBP-253	76°F	2046	Geometry: See Sketch
#CV77 PBP-263			
#CV78 PBP-254			
#CV79 PBP-264			
N/A JNG 10-9-90	N/A	N/A	N/A
CAL BLOCK NO. UT-48 THK .562"	N/A	N/A	NOTCHES N/A SDH ☒

EXAM COVERAGE

N/A ID N/A OD N/A 0° WHAZ N/A 0° BASE MATERIAL ☒ AXIAL N/A CIRCUMFERENTIAL N/A SIZING N/A OTHER N/A

EQUIPMENT DATA

SEARCH UNIT

Manufacturer KB-Aerotech
Style Gamma ☒ Single N/A Dual
Serial No. B07524
Size(s) .50" Freq. 2.25
Angle 45° Mode Shear
Couplant Ultragel II Batch No. 9088

INSTRUMENT

Manufacturer Krautkramer-Branson Model USK-7S
Serial No. 31458-1146 Cable Length 6'
Frequency Broad Band Reject OFF
Rep Rate Fixed Damping Fixed
dB Gain: Coarse 20 Fine 20
Primary Reference Response Amplitude - % Full Screen Height 1 3/4T @ 75%

DAC PLOT-TIME 10:15 (AM) PM

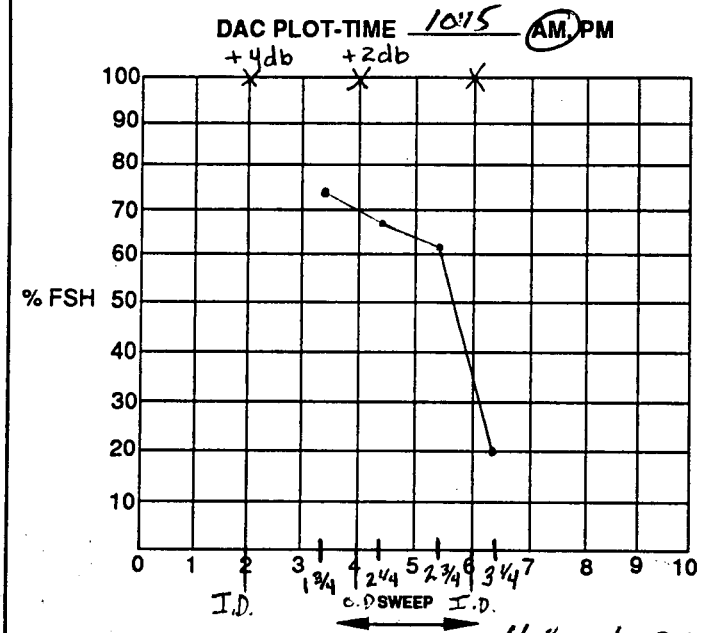

SCREEN SIZE: 4.0" metal Path

NOTE: *When performing examinations where no DAC is required, indicate reference reflector location and amplitude above.*

CALIBRATION CHECKS

TIME	AMPL ± 20% (dB) OF INITIAL AMPL: YES	NO	SWEEP + 10% OF INITIAL LOCATION: YES	NO
FINAL 12:15 PM	X	N/A	X	N/A
		N		
		A		

EXAMINER(S):

1. Steve Spindler TC-1A LEVEL II DATE 7/14/90
2. J Spickle TC-1A LEVEL I DATE 7/14/90

REVIEWED BY:

1. M. Orick Jr. DATE 7/16/90
2. W. J. Johnson Jr. III DATE 7-28-90

ANII D. Thompson DATE 11/28/90

ADDITIONAL REMARKS Reducer to Valve Weld Examined from Reducer Side Only.
SEE ATTACHMENT No. 1.

Reviewed: J S Boardman SCE UT LIII 9/6/90

*SO1-XXVII-22.7 Rev. 0

6062/1-90

EBASCO SERVICES INCORPORATED

MATERIALS TESTING AND EXAMINATION SERVICES

INDICATION DATA

SHEET 2 OF 3

ITEM IDENTIFICATION 1

CALIBRATION DATA SHEET NO. 90-SCE-UT-003

DATA TABULATION

SCAN DIRECTION: ST. BEAM	SCAN DIRECTION: CIRCUMFERENTIAL	SCAN DIRECTION: AXIAL	INDICATION NO.	EXAM. ON (ADJ WELD) SIDE OF WELD	MAX % DAC	SWEEP READING	SEARCH UNIT EXIT POINT LOCATION: CIRCUMFERENTIAL (DISTANCE CW OR CCW FROM REFERENCE LINE)	SEARCH UNIT EXIT POINT LOCATION: AXIAL (DISTANCE FROM WELD ℄	50% DAC OR HALF MAXIMUM AMPLITUDE: MINIMUM: SWEEP READING	50% DAC OR HALF MAXIMUM AMPLITUDE: MINIMUM: S.U. POSITION	50% DAC OR HALF MAXIMUM AMPLITUDE: MAXIMUM: SWEEP READING	50% DAC OR HALF MAXIMUM AMPLITUDE: MAXIMUM: S.U. POSITION	STRAIGHT BEAM (CAL ON BACK REFLECTION): INDICATION AMPLITUDE (% FSH)	STRAIGHT BEAM (CAL ON BACK REFLECTION): BACK REFLECTION AMPLITUDE (% FSH)
N/A	N/A	✓	1	REDUCER SIDE UP STREAM	70%	2.8	SEEN 360° OF WELD INTERMITTANT	1.95"	N/A	N/A	N/A	N/A	N/A	N/A
N/A	N/A	✓	2	REDUCER SIDE UP STREAM	50%	4.9	SEEN 360° OF WELD VARING AMPLITUDES INTERMITTANT	1.85"	N/A	N/A	N/A	N/A	N/A	N/A
									N	A				

INDICATION NO.	LOCATION OF INDICATION: CIRC	LOCATION OF INDICATION: AXIAL	LENGTH	% t: DEPTH (IF PLANAR)	% t: DISTANCE FROM SURFACE	WIDTH (IF LAMINAR)	COMMENTS
							THESE INDICATIONS HAVE PLOTTED AS BEING GEOMETRIC DUE TO I.D. CONTOUR.
							ONE SIDED EXAM - PIPE TO VALVE - PIPE SIDE 10-9-90
				N	A		(1) REDUCER TO VALVE #'S CV76, CV77, CV78 + CV79 / PBP-253, PBP-263, PBP-254, PBP-264 INDICATIONS TYPICAL ALL 4
							SEE ATTACHMENT No. 1.
							N A

CONTINUATION ATTACHED - ☐ YES ☒ NO

EXAMINER(S)

1. Steve Spindler TC-1A LEVEL II

2. F. Sulde TC-1A LEVEL I

REVIEWED BY M. Oril, Jr. DATE 7/16/90

Reviewed: J. Boardman SCE UT LIII 8/6/90

ANII 11/28/90

REPORT # 90-SCE-UT-003

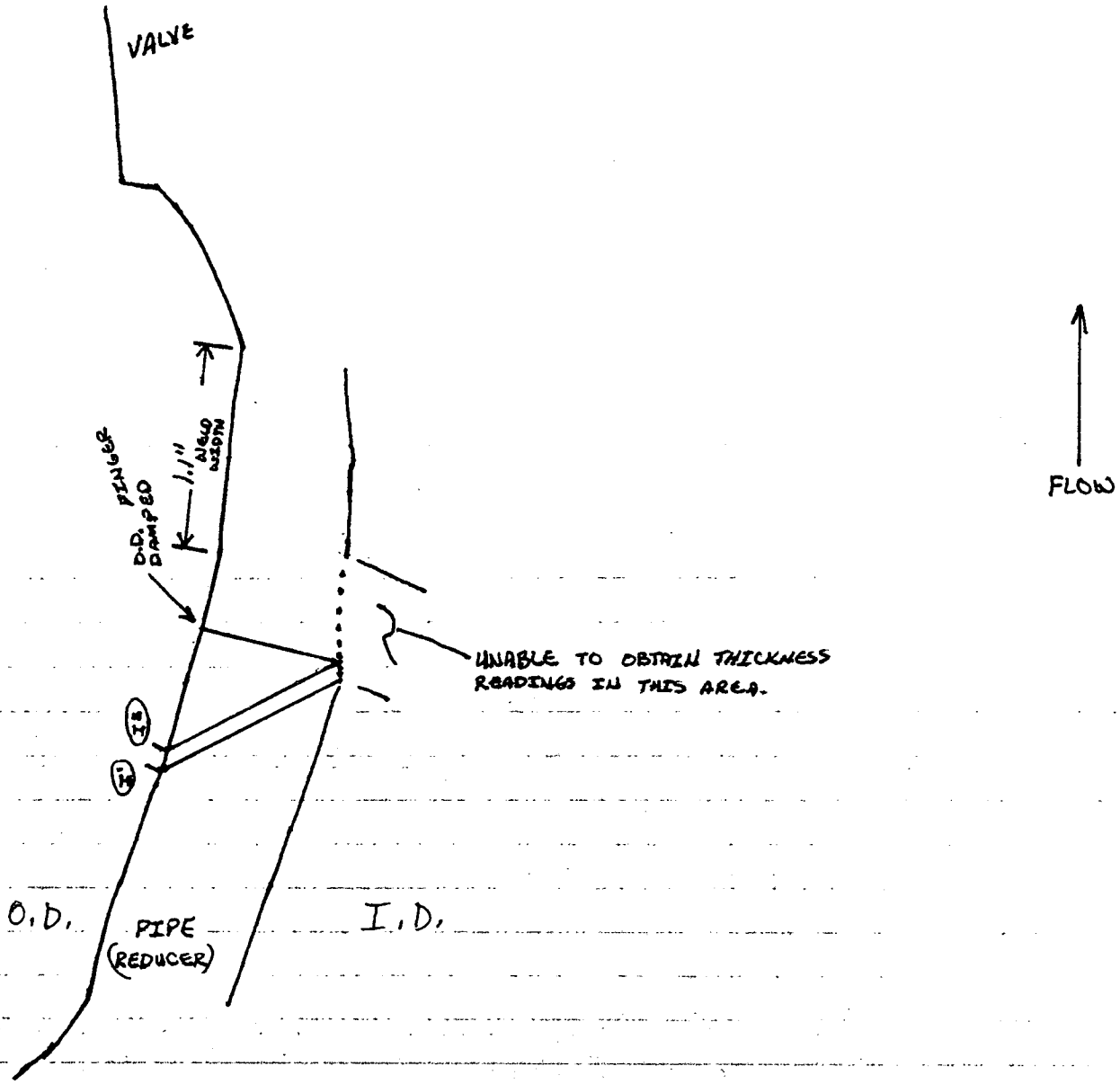

INDICATIONS ARE TYPICAL 4 WELDS

PIPE TO VALVES NUMBERED CV 76, CV 77, CV 78 + CV 79

PBP-253, PBP-263, PBP-254, PBP-264

SEE ATTACHMENT No. 1. WJG 10-9-90

Steve Spindler LII 7/14/90

Reviewed: J. Boardman 8/6/90
SCE UT LIII

C. Thompson ANII 11/28/90

EBASCO SERVICES INCORPORATED

210 Clay Avenue, Lyndhurst, NJ 07071-3507, (201) 896-5000

EBASCO

ATTACHMENT No. 1 TO REPORT # 90-SCE-UT-003

The calibration standard supplied by SCE (UT-48) which was utilized to ultrasonically examine the 6" main steam reducer-to-valve welds (8" x 6" reducer to valve numbers 76, 77, 78 79)* was lacking a 1/2 "T" hole for calibration of the axial scan. This hole is required for calibration per the 1974 Edition of ASME Sections XI and V with the Summer 1975 Addenda. Section V requires that the first point on the Distance-Amplitude Correction (DAC) curve shall be the 1-1/2 "T" (6/8 Vee) hole. Since a 1-1/2 "T" hole was unavailable, the 1-3/4 "T" (7/8 Vee) hole was used for the first point on the DAC (primary reference sensitivity). It is surmised that this alternate technique is more sensitive than the calibration achieved utilizing the 1-1/2 "T" hole since a longer metal path was involved. This alternate calibration provides more sensitivity to detect reflectors parallel to the welds than specified by the referenced Codes.

By extrapolating the DAC curve beyond the anticipated thickness range for 6"ϕ, schedule 120 pipe, 100% of the Code required volume was examined from one side only (due to reducer-to-valve configuration).

Additionally, a straight beam examination was performed in conformance with Procedure No. SCE-UT-S75-1 in order to supplement the "one-side only" angle beam examination.

*WELD No.'s PBP-253, PBP-263, PBP-254, PBP-264

W.J. Johnson 10-9-90

Miguel Orihuela, Jr. Site Supervisor	M. Orihuela Jr. Signature/Level	7/19/90 Date
R. Paillaman UT Corporate Level III	Signature	7/20/90 Date
W.R. JOHNSON Rockwell Level III	W.J. Johnson Signature	7/27/90 Date
R.P. DeLong SCE Representative	R. DeLong Signature	8/6/90 Date
J. BOARDMAN UT L III SCE	J. Boardman	8/6/90
C.D. THOMPSON	C.D. Thompson AN II	11/26/90

File 1076

Steam Generator Tubing Examinations
Unit 1
Refueling Cycle 11

The results of the Steam Generator tubing examinations performed during the Unit 1 Cycle 11 Refueling Outage are summarized in the November 29, 1990 report to the Nuclear Regulatory Commission, which are included in this Inservice Inspection Summary Report.

UNITED STATES
NUCLEAR REGULATORY COMMISSIO
WASHINGTON, D. C. 20555

January 18, 19

Docket No. 50-206

Mr. Harold B. Ray
Senior Vice President
Southern California Edison Company
Irvine Operations Center
23 Parker Street
Irvine, California 92718

Dear Mr. Ray:

SUBJECT: SAN ONOFRE UNIT 1 STEAM GENERATOR TUBE INSPECTION REPORT

We have reviewed the report "1990 Steam Generator Inspection Results, San Onofre Unit 1" which was submitted November 29, 1990 by the Southern California Edison Company. The report documents the steam generator tube inspections and repairs that were completed during refueling outage 11 to comply with Technical Specification Section 4.16. Additionally, the report documents results of a visual inspection of wrapper support bars on the secondary side of the steam generators.

Our review concludes that your inspections and repairs are consistent with Technical Specification requirements and industry practice. Accordingly, no further action is required.

Sincerely,

George Kalman

George Kalman, Senior Project Manager
Project Directorate V
Division of Reactor Projects III/IV/V
Office of Nuclear Reactor Regulation

cc: See next page

Mr. Harold B. Ray
Southern California Edison Company

San Onofre Nuclear Generating
Station, Unit No. 1

cc:
David R. Pigott, Esq.
Orrick, Herrington & Sutcliffe
600 Montgomery Street
San Francisco, California 94111

Mr. Robert G. Lacy
Manager, Nuclear Department
San Diego Gas & Electric Company
P. O. Box 1831
San Diego, California 92112

Resident Inspector, San Onofre NPS
c/o U.S. Nuclear Regulatory Commission
P. O. Box 4329
San Clemente, California 92672

Mayor
City of San Clemente
100 Avenida Presidio
San Clemente, California 92672

Chairman, Board of Supervisors
County of San Diego
1600 Pacific Highway, Room 335
San Diego, California 92101

Regional Administrator, Region V
U.S. Nuclear Regulatory Commission
1450 Maria Lane, Suite 210
Walnut Creek, California 94596

Mr. John Hickman
Senior Health Physicist
Environmental Radioactive Mgmt. Unit
Environmental Management Branch
State Department of Health Services
714 P Street, Room 616
Sacramento, California 95814

Mr. Don J. Womeldorf
Chief, Environmental Management Branch
California Department of Health Services
714 P Street, Room 616
Sacramento, California 95814

Mr. Richard J. Kosiba, Project Manager
Bechtel Power Corporation
12440 E. Imperial Highway
Norwalk, California 90650

Mr. Phil Johnson
U.S. Nuclear Regulatory Commission
Region V
1450 Maria Lane, Suite 210
Walnut Creek, California 94596

(10)

November 29, 1990

U. S. Nuclear Regulatory Commission
Attention: Document Control Desk
Washington, D. C. 20555

Subject: Docket No. 50-206
Steam Generator Inspections
San Onofre Nuclear Generating Station, Unit 1

In accordance with the requirements of Technical Specification 4.16, "Inservice Inspection of Steam Generator Tubing," an inspection of the San Onofre Nuclear Generating Station, Unit 1 (SONGS 1) steam generators was performed as part of the Cycle 11 refueling outage activities. The results of the inspection and the corrective actions taken need to be provided to the NRC for review and approval prior to return to service as required by section 4.16.D.4 and your August 4, 1988 letter. Accordingly, enclosed is a report titled "1990 Steam Generator Inspection Results, San Onofre Unit 1." This report provides the information necessary to facilitate the NRC review of the inspection results and remedial actions.

The enclosed report also includes the results of our inspection of all the tubes in service which have defects below the uppermost one inch of tube roll expansion. This satisfies our reporting of these results seven days prior to return to service as required by Section 4.16.D.5. This report also satisfies our commitment to inspect the steam generator wrapper support bars as we clarified in our December 23, 1988 letter.

Our current schedule is to return the unit to service on February 28, 1991. If you require any additional information to support your review effort, please let me know.

Sincerely,

R. W. Krieger
STATION MANAGER

cc: J. B. Martin (Regional Administrator, NRC Region V)
C. Caldwell (USNRC Senior Resident Inspector, SONGS 1, 2, and 3)
J. E. Tatum (Project Manager, SONGS 1, USNRC, NRR)
Institute of Nuclear Power Operations (INPO)

II. TECHNICAL SPECIFICATION INSPECTION

A. Introduction

The San Onofre Unit 1 TS steam generator tubing inspection was performed during August 23, 1990, through September 7, 1990. The previous technical specification inspection was performed in March 1988. Southern California Edison's request to conduct the next steam generator tube inspection during the Thermal Shield Support Replacement and Cycle 11 Refueling Outage commencing June 30, 1990, rather than by March 7, 1990 was approved by U. S. Nuclear Regulatory Commission Order (Reference 3).

The March 1988 and earlier inspection results indicated that steam generators "A", "B", and "C" (SG-A, SG-B, and SG-C) are behaving in a like manner. Based on TS 4.16.A.3, which allows the inspection of steam generators on a rotating schedule if they are performing in a like manner, SG-A was selected for the inspection. The inspection plans, results, and conclusions are discussed below.

B. Steam Generator Leak Test/Corrective Action

1. Description

San Onofre Unit 1 was experiencing a steam generator primary to secondary leak of approximately 15 gallons per day (gpd) when the plant shut down on June 30, 1990. This leakage had been detected during the Cycle 10 fuel cycle and slowly increased to 15 gpd before shutdown. This leakage was well below TS limits for the steam generators. Since this leakage had been detected during the fuel cycle, a leak test had been planned to identify and remove the leaking tubes from service.

2. Results and Corrective Action

The secondary side of all three steam generators was pressurized to approximately 650 pounds per square inch and the primary side of the tubesheet in each steam generator channel head was scanned for leaks using a pan and tilt camera. No leakage was observed in any cold leg channel head. A total of thirteen leaking tubes were identified in the hot leg channel heads. All leaking tubes are sleeved on the hot leg end. The breakdown of leaking tubes per steam generator is shown below:

bcc:

J. A. Beoletto, Rm. 330, GO1
C. Chiu, D-4-E, SONGS
L. O. Cash, D-18, SONGS
R. L. Erickson, (SDG&E), D-3-A, SONGS
D. A. Herbst, N-42, SONGS
B. Katz, D-4-E, SONGS
R. W. Krieger, D-14, SONGS
H. E. Morgan, Vice President, D-45, SONGS
F. R. Nandy, 109-A, IOC
Nuclear Licensing Supervisors, 109-A, IOC
R. D. Plappert, D-12, SONGS
Harold B. Ray, Senior Vice President, 102-A, IOC
J. L. Reeder, E-50, SONGS
J. T. Reilly, X-480, IOC
R. M. Rosenblum, 109-B, IOC
P. Shaffer, D2F, SONGS
A. J. Schramm, A-72, SONGS
M. P. Short, D-16, SONGS
R. W. Waldo, D-15, SONGS
M. A. Wharton, 135-J, IOC
Compliance File, D-2-F, SONGS
CDM File
NSG, N-46, SONGS
NTD Resource Center, E-50B
RCTS File, D-2-F, SONGS

REVIEWERS:

R. W. Krieger
M. P. Short MPS, received 11/29, need to say whether A 40-36 & B34-33, B35-34 were plugged
* H. W. Newton
* D. Optiz
RDP R. D. Plappert
P. Shaffer
* K. A. Slagle
** * L. D. Brevig
J. Mundis ← * with revised sections V. and VIII and minor comments in sections VI & VII incorporated
* A. Matheny

* Concurrence indicated on supplemental bcc:
** Concurrence received via telephone from R. Ornelas for R. Ornelas and F. Nandy 11/26/90

1990 STEAM GENERATOR INSPECTION RESULTS

SAN ONOFRE UNIT 1

DOCKET NO. 50-206

NOVEMBER 1990

SOUTHERN CALIFORNIA EDISON COMPANY

ROSEMEAD, CALIFORNIA

Table of Contents

I. INTRODUCTION

On June 30, 1990, San Onofre Unit 1 began the Thermal Shield Support Replacement and Cycle 11 Refueling Outage. As part of this outage, the steam generator tubing was inspected in accordance with the San Onofre Unit 1 Technical Specification (TS) 4.16, Inservice Inspection of Steam Generator Tubing. The purpose of this report is to provide detailed results of the steam generator inspections performed during the outage to facilitate the NRC review of these results and approval of the corrective action taken at San Onofre Unit 1 as it relates to the inspection of steam generators.

Consistent with the provisions of TS 4.16, an inspection was performed addressing requirements for random surveillance of the steam generator tubing and previously detected degradation. The last such inspection was conducted in March 1988. Further, in accordance with References 1 and 2, a secondary side inspection was conducted to visually inspect the intact wrapper support bars. The purpose of this inspection was to verify the bars had remained intact during operation and did not require removal.

Section II of this report contains the TS inspection program description, results, corrective actions, and conclusions. Section III of this report contains the cold leg top of the tubesheet indications introduction, results, and conclusions. Section IV contains the roll and roll transition primary side cracking introduction, results, and conclusions. Section V contains the secondary side circumferential indications introduction, results, and conclusions. Section VI contains the wrapper support bar inspection description, results, and conclusions. Section VII summarizes the overall conclusions derived from the inspection program. Finally, Section VIII provides a listing of the references used in this report.

SG	Tube Number Row - Column	Type of Sleeve (Upper Joint)	Leak Rate (Drops/Minute)
A	9 - 43	Braze	0.25
B	37 - 52	Mechanical	0.5
	36 - 52	Mechanical	0.1
C	35 - 61	Mechanical	5.0
	34 - 48	Mechanical	1.7
	31 - 67	Mechanical	1.1
	30 - 64	Mechanical	0.9
	34 - 62	Mechanical	0.2
	35 - 41	Mechanical	0.2
	34 - 53	Mechanical	0.1
	34 - 51	Mechanical	<0.1
	34 - 64	Mechanical	<0.1
	35 - 42	Mechanical	<0.1

All leaking tubes were inspected with eddy current over their full length, including the sleeved portion. There were no eddy current indications which correlated to the leakage. All leaking tubes were removed from service by mechanical plugging.

3. Conclusions

It is inferred that the observed leakage is associated with the sleeve joints based on the lack of correlatable eddy current indications.

The leakage for each leak limiting sleeve was within the design basis as discussed in Reference 4 (210 drops per minute).

C. Eddy Current Testing/Corrective Action

1. Description

The conventional bobbin coil probe was used to provide the best possible assessment of the general condition of the inspected length of the non-sleeved portion of the steam generator tubes. The 8x1 probe and motorized rotating pancake coil (MRPC) probe were used to supplement the bobbin probe when necessary. The magnetically biased bobbin probe and the crosswound probe were employed to assess the condition of the sleeves inspected.

The general eddy current testing program consisted of inspecting the non-sleeved length of 300 steam generator tubes in SG-A (at least 3% of the total number of tubes in service in all steam generators). In addition, the sleeved portion of 412 tubes (6.5% of the total number of sleeved tubes in service in all steam generators) was inspected. Unsleeved tubes for two pitches around the sleeving boundary and a random pattern in the remaining peripheral tubes were inspected from the hot leg tube end through the lowermost hot leg support. Inspection of these 474 unsleeved tubes (12.7% of the total number of unsleeved tubes in service in all steam generators) served the dual purposes of detection of indications of secondary side intergranular attack (IGA) at the top of the hot leg tubesheet and detection of primary side roll and roll transition cracking near the hot leg tube end. Also, previous eddy current indications in SG-A, greater than or equal to 20% through-wall, were inspected.

The inspection of the cold leg indicated there were tubes with imperfections in excess of the plugging limit at the top of the cold leg tubesheet in SG-A. As a result of identifying these imperfections it was necessary to inspect three percent of the tubes in one of the uninspected steam generators (SG-C was chosen) in accordance with TS 4.16.B.1. Also, since these imperfections were in excess of the plugging limit, this required inspection of an additional three percent of the tubes in SG-A and inspection of three percent of the tubes in SG-B and SG-C in accordance with Technical Specification 4.16.B.2. The increased inspection in SG-A included the tubes necessary to surround all defective tubes by two pitches. A total of 1794 of the tubes (53.4%) in SG-A were inspected at the top of the cold leg tubesheet, significantly exceeding all possible expansion criteria, including any that may have been required by that of TS 4.16.B.3 (6% of the tubes in SG-A). A total of 6 tubes with imperfections in excess of the plugging limit at the top of the cold leg tube sheet in SG-A were found. Based on eddy current testing results for SG-B and SG-C no tubes with imperfections were found in these steam generators at the top of the cold leg tube sheet.

Three imperfections were found in excess of the plugging limit between the top of the hot leg tubesheet and the lowermost support in SG-A. As a result of identifying these imperfections it was necessary to inspect three percent of the tubes in one of the uninspected steam generators (SG-C was chosen) in accordance with TS 4.16.B.1. Also, since these imperfections were in excess of the plugging limit, this required inspection of an additional three percent of the tubes in SG-A and inspection of three percent of the tubes in SG-B and SG-C in accordance with TS 4.16.B.2. The increased inspection in SG-A included the tubes necessary to surround all defective tubes by two pitches. Based on the eddy current testing results for SG-C no imperfections in excess of the plugging limit were found. The increased inspection in SG-B identified one imperfection in excess of the plugging limit prompting inspection of an additional 6% of the tubes in SG-B in accordance with TS 4.16.B.3. Three tubes were identified by this additional inspection as having imperfections in excess of the plugging limit. Two tubes were identified by this additional inspection as having secondary side circumferential indications at the top of the hot leg tubesheet, and were conservatively handled in the same manner as defective tubes would be. Additional inspection was performed to surround all defective tubes in SG-B by two pitches and gain data beyond that required by the TSs. A total of 998 tubes (76.8% of the unsleeved tubes in SG-B) were tested in the SG-B expansion sequence.

Tubesheet maps showing inspected tubes in SG-A, SG-B, and SG-C are provided in Appendix A.

2. Results and Corrective Action

As a result of the general technical specification and additional eddy current testing program, a total of 16 tubes were removed from service. This consists of 10 tubes in SG-A and 6 tubes in SG-B as listed in the following table. Appendix B provides an elevation view of the steam generator illustrating the axial location designations used in the listing.

SG	Tube Number Row - Column	Flaw Size % Throughwall	Axial Location
A	30 - 32	67	TSC + 3.0
	33 - 38	57	TSC + 3.0
	33 - 41	53	TSC + 3.0
	27 - 52	53	TSC + 7.9
	4 - 18	51	TSC + 0.5
	34 - 42	50	TSC + 2.2
	40 - 36	94	TSH + 2.9
	40 - 38	63	TSH + 6.6
	15 - 70	50	TSH + 42.7
	1 - 68	Note (1)	01H
B	45 - 51	DRI/IDI (2)	TEH + 2.0
	34 - 71	DRI/IDI	TEH + 1.9
	25 - 79	DRI/IDI	TEH + 2.2
	28 - 79	DRI/IDI	TEH + 2.6
	34 - 33	DTI/SCI (3)	TSH + 0.2
	35 - 34	DTI/SCI	TSH + 0.0

Notes:

(1) Restricts passage of a 0.460" diameter probe

(2) DRI/IDI - Distorted roll indication per bobbin probe, Inside diameter indication per MRPC probe.

(3) DTI/SCI - Distorted tubesheet indication per bobbin probe, Secondary side circumferential indication per MRPC probe.

Section III addresses cold leg top of tubesheet indications (six tubes removed from service) in detail. Section IV addresses primary side roll and roll transition cracking (four tubes removed from service) in detail. Section V addresses secondary side circumferential indications (three tubes removed from service) in detail. The following paragraphs address the three remaining tubes removed from service.

The defect in SG-A tube 40-38 is in the parent tubing above the sleeve. It is a typical hot leg "volumetric" (not crack-like) indication whose elevation above the hot leg tubesheet is not unusual. It is representative of other indications previously found in tubing at the same elevation. Surrounding tubes within two pitches of this tube were inspected and found to be free of defects.

The defect in SG-A tube 15-70 is in the parent tubing above the sleeve in a typically unflawed axial location. It is not associated with any support structure in the steam generator. It is 42.7 inches above the hot leg top of the tubesheet, 12.7 inches above the top of the sleeve and 2.5 inches below the lowermost hot leg support plate. Surrounding tubes within two pitches of this tube were inspected and found to be free of similar indications. No similar indications have been noted in any of the tubes inspected during this inspection or previous inspections.

Tube 1-68 in SG-A restricted passage of a 0.460 inch diameter probe at the lowermost hot leg support. This tube restricted passage of a 0.500 inch diameter probe in previous inspections. Considering the accuracy limitations of the gaging technique, the isolated nature of this indication, and other available data, this restricted tube does not alter the previous conclusion (Reference 1) that denting is not progressing.

3. Conclusions

The tubes selected for this inspection included random tubes and tubes in critical areas identified by Unit 1 and other similar plant experience. All tubes classified as defective, based on eddy current testing results, were removed from service by mechanical plugging. Other tubes were preventively removed from service by mechanical plugging consistent with eddy current testing results.

D. Summary/Conclusions

A total of 3,949 tubes were inspected (39.5% of the tubes in service), and 29 tubes were removed from service by mechanical plugging. Tubesheet maps showing inspected tubes in SG-A, SG-B, and SG-C are provided in Appendix A. The 29 tubes which were plugged included:

- 13 leaking sleeves
- 6 defects at the top of the cold leg tubesheet
- 4 indications of primary side hot leg roll transition cracking
- 3 secondary side top of the tubesheet circumferential indications
- 2 defects in parent tubing above hot leg sleeves
- 1 tube restricting passage of a 0.460 inch diameter eddy current probe

This inspection has demonstrated that limited progression of previously identified degradation mechanisms has occurred. These mechanisms include secondary side degradation at the cold leg top of tubesheet, primary side roll transition cracking, and secondary side circumferential indications at the hot leg top of tubesheet. There has been no detectable progression of denting, anti-vibration bar wear, or sleeve degradation.

This inspection has further demonstrated that this limited degradation progression can be monitored in subsequent routine inspections, and defective tubes removed from service in a timely manner. Accordingly, it is concluded that the remedial action taken (plugging) is appropriate to resolve steam generator tube degradation identified during this inspection and no further action is required.

III. COLD LEG TOP OF THE TUBESHEET INDICATIONS

A. Introduction

Degradation on the secondary side of the tubing at the cold leg top of the tubesheet has been noted at San Onofre Unit 1 since 1978. Significant inspection in this region of the tube bundle started at this time in response to increasing industry awareness of the potential for degradation in regions other than the hot leg and U bend regions. The degradation is dispersed throughout the region of the tube bundle in which a sludge pile is expected. However, indication depths tend to be stable, and rarely exceed the plugging limit.

As reported in Reference 5, apparent growth of indications in this region in 1985 prompted comparison of a population of 296 indications, using data collected in 1980 as a baseline. The results of this comparison and subsequent evaluation in 1988 (Reference 1) indicated growth of indications in this region is very limited.

B. Results

A total of 2398 tubes (1794 in SG-A, 303 in SG-B, and 301 in SG-C) were inspected at the top of the cold leg tubesheet to monitor growth of indications in this region. Using the results of this inspection, 260 of the indications previously compared in 1985 (indications in those tubes remaining in service) were compared over a three fuel cycle interval from 1980 to 1990 with the following results:

SG	Number of Indications Compared	Average Growth Rate (Percent Throughwall Per Cycle)
A	171	-1.09
B	36	-0.68
C	53	-1.01

In addition to the foregoing comparison, previous data for the six defective tubes detected in this inspection was re-analyzed using state-of-the-art data analysis techniques to determine the maximum and mean growth rate per fuel cycle. Data from the Cycle 9 (1985) Refueling Outage was available for comparison with the present Cycle 11 (1990) Refueling Outage data. This provides an interval of two operational cycles. A comparison of the data from these two cycles is provided below. The maximum growth rate from this comparison is 7.5% per cycle for tube 34-42. The mean growth rate for all six indications is 3.8% per cycle.

Re-Analyzed

Tube Number	Indication Axial Location	Cycle 9 Indication Depth (% Throughwall)	Cycle 11 Indication Depth (% Throughwall)	Growth (% Per Cycle)
30 - 32	TSC + 3.0	62 (Note 1)	67	2.5
33 - 38	TSC + 3.0	44	57	6.5
33 - 41	TSC + 3.0	50 (Note 2)	53	1.5
27 - 52	TSC + 7.9	46	53	3.5
4 - 18	TSC + 0.5	48	51	1.5
34 - 42	TSC + 2.2	35	50	7.5

Notes:

(1) This indication was recorded as 46% during the Cycle 9 outage; thus this tube was not classified as defective, and accordingly was not plugged. Re-analysis, consistent with Cycle 11 techniques, provides a result of 62%.

(2) This indication was recorded as 43% during the Cycle 9 outage; thus this tube was not classified as defective, and accordingly was not plugged. Re-analysis, consistent with Cycle 11 techniques, provides a result of 50%. This difference in analysis results of 7 percent is within the expected eddy current measurement uncertainty (10%).

C. Conclusions

The results of the comparison of 260 indications over three fuel cycles shows there is no significant growth for the cold leg top of the tubesheet indications when considered as a group.

Although the change in the indications for the six tubes with defects demonstrate that for some individual tubes limited degradation may be progressing, the mean growth rate of 3.8% per cycle for this group is well within that assumed in the safety analysis which defines the basis for the TS 4.16. Therefore, existing requirements to inspect previously identified problem regions during future inspections will ensure corrective actions are performed as necessary to prevent potential failures.

IV. PRIMARY SIDE ROLL AND ROLL TRANSITION CRACKING

A. Introduction

A 100% inspection of the hot leg unsleeved tubes in all three steam generators was done in February 1988 for primary side roll and roll transition cracking. The 147 tubes affected by this degradation mechanism were removed from service. Another 44 tubes with imperfections below the uppermost one inch of sound roll were left in service based on TS 4.16.D.1.e. The results for inspection of the cold leg end of the tubes indicated this problem was not present in the cold leg side.

Comparison of 1985 and 1988 eddy current data was done in 1988 to determine if primary side roll transition zone cracking was active. This comparison showed a slight change in the vertical distortion in only 3 out of the 13 tubes compared.

B. Results

A total of 1610 tubes (43% of the unsleeved tubes in service) were examined in the hot leg roll and roll transition region in the three steam generators using the bobbin probe. Hot leg primary side roll or roll transition cracking was not detected in any of the 474 tubes examined (40%) in SG-A, or any of the 188 tubes examined (15.4%) in SG-C. However, primary side roll transition zone cracking was detected and confirmed in four tubes of the 948 tubes examined (73%) in SG-B.

The 44 tubes with previous imperfections below the uppermost inch of sound roll continue to meet technical specification criteria for remaining in service. Appendix C contains examination results for these 44 tubes as required by TS 4.16.D.5.

As a by-product of examination for other purposes, 2398 tubes were examined (24% of the tubes in service) in the cold leg roll and roll transition region in the three steam generators. The results of the inspection of the cold leg tubes continues to confirm that this problem is not present in the cold leg side.

A review was conducted in 1990 of 1988 data for all four of the tubes in SG-B with primary side roll transition zone cracking. All of these indications were present to a limited degree in the 1988 data. A comparative review of the 1990 bobbin probe data for these indications, relative to indications at corresponding locations in tubes removed from service in 1988, provided an order of magnitude estimate of the extent of the cracking depth. This comparison indicated that the signal amplitudes for these four tubes is approximately 30% of the typical signal amplitudes for tubes removed from service in 1988. The small amplitude of these signals indicates that cracking in these tubes is in the early stages.

C. Conclusions

The limited number of tubes affected by primary side roll and roll transition cracking, and the small amplitude of the bobbin coil eddy current signals for these tubes indicate that primary side roll and roll transition cracking is not progressing significantly.

Future inspections will provide timely detection of tubes affected by this degradation mechanism. This will support timely removal of defective tubes from service. Leak test results continue to demonstrate that no leakage has been experienced at San Onofre Unit 1 due to this degradation mechanism.

Further, continued growth monitoring of in service tubes with imperfections below the uppermost one inch of sound roll, per technical specifications, will provide for timely removal of appropriate tubes from service.

V. SECONDARY SIDE CIRCUMFERENTIAL INDICATIONS

A. Introduction

San Onofre Unit 1 has a history of secondary side circumferential indications at the hot leg top of the tubesheet. In 1980-1981 approximately 65% of the tubes were sleeved on the hot leg end in response to secondary side circumferential intergranular attack (IGA) at the top of the hot leg tubesheet. Tubes in the unaffected outer periphery of the tube bundle were not sleeved.

In 1988 two unsleeved tubes adjacent to sleeved tubes were identified to have IGA-like indications at the top of the hot leg tubesheet based on MRPC data. Correlation of MRPC data with corresponding bobbin probe data for these two indications indicated that the degradation was less than 20 percent through wall. These two tubes were removed from service and a detailed report was provided to the NRC (Reference 6). It was concluded that IGA was not progressing.

B. Results

A total of 1610 tubes (43% of the unsleeved tubes in service) were inspected at the hot leg top of the tubesheet region. This includes 474 tubes (40%) in SG-A, 948 tubes (73%) in SG-B, and 188 tubes (15.4%) in SG-C. 87% of the unsleeved tubes adjacent to sleeved tubes were inspected.

1. SG-A Tube 40-36

One tube (40-36) in SG-A had a 94% through wall outside diameter indication located 3-inches above the top of the hot leg tubesheet. It was detected and quantified using the bobbin coil probe. The MRPC data shows that the indication is circumferentially oriented, is less than 120 degrees (about 3/4-inch) in circumferential extent, and is about 1/4-inch in axial extent. The indication had some, but not all, of the characteristics of IGA, as previously found at San Onofre Unit 1. The indication was not present on the eddy current test data taken in 1988. Tube 40-36 is adjacent to sleeved tubes. As indicated above, 87% of the tubes adjacent to the sleeved tubes were inspected. Among these tubes it is the only tube with an indication at this or a similar axial location. Further, unsleeved tubes within two pitches of this tube were inspected using both bobbin and MRPC probes and were found free of defects.

Based on the results of the evaluation of tubes "pulled" for evaluation in 1980-1 the occurrence of IGA degradation at 3 inches above the top of the hot leg tubesheet in a tube adjacent to sleeved tubes would not be unexpected. However, experience at San Onofre Unit 1 indicates that the probability is very low for occurrence of IGA at locations other than at the top of the hot leg tubesheet. Accordingly, it is concluded that the probability of other tubes experiencing IGA, at locations above the top of the tubesheet, is also very low. Further, based on the results of tube pressure testing reported in Reference 7, it is concluded that in the as-found condition tube 40-36 in SG-A had adequate strength to successfully withstand design basis accident conditions.

2. <u>SG-B Tubes 34-33 and 35-34</u>

Two tubes (34-33 and 35-34) in SG-B had secondary side circumferential indications detected by the bobbin probe at the top of the hot leg tubesheet. The characteristics of these indications are typical of IGA, as previously found at San Onofre Unit 1. These indications were not precisely quantified because of interfering factors at this location. However, the data indicates that their depth is less than the plugging limit of 50% through wall. MRPC data, subsequently collected, showed these indications to be circumferentially oriented, 180 degrees in extent. These tubes are also adjacent to sleeved tubes. Unsleeved tubes within two pitches of these tubes were inspected with both bobbin and MRPC probes and found free of similar indications.

All three affected tubes were in the special group of tubes specifically inspected for circumferential indications at the top of the hot leg tubesheet. This group includes all unsleeved tubes forming a boundary 2 tubes wide, completely surrounding the area of sleeved tubes. For each inspection, in the steam generator chosen for the technical specification inspection, this group is inspected with both the bobbin probe and a probe (8x1 or MRPC) to enhance response of circumferential indications.

The eddy current testing program was aggressively expanded in response to the three indications. Thus, the region of the tube bundles where the highest probability exists for this degradation was extensively inspected. In SG-A, unsleeved tubes within two tubes of sleeved tubes were inspected with both the bobbin probe and the 8x1 probe as part of the initial inservice inspection program. In SG-B, unsleeved tubes within two tubes of sleeved tubes were inspected with the bobbin probe. In SG-C, unsleeved tubes within one tube of sleeved tubes (with the exception of row 1 tubes) were inspected with the bobbin probe. Additionally, the three affected tubes, and surrounding unsleeved tubes within two tubes of the affected tubes were inspected with the MRPC probe.

The bobbin probe detection capabilities demonstrated in this inspection are consistent with capabilities discussed in Reference 6. Reference 8 reported that "based on correlation of 1980 ECT data with the pulled tube metallurgical results,"... (of 17 tubes)..." the bobbin coil can be used to detect IGA, as found at San Onofre Unit 1, at levels in excess of 20%". All three of the secondary side circumferential indications were detected by the bobbin probe. No additional indications were identified in the testing done with the 8x1 probe and MRPC probe.

C. Conclusions

The identification of three tubes with indications of potential intergranular attack (IGA) at or near the top of the hot leg tubesheet indicates that there may be very limited IGA progression at San Onofre Unit 1.

The depth of the indication in tube 40-36 in SG-A is of concern; however, no other similar flaws have been detected in any of the large number of tubes inspected. Further, even if other tubes were to become similarly affected, based on the limited circumferential extent of the observed indication, it is concluded that a tube rupture would be extremely unlikely. Therefore, the limited number of tubes affected out of the large number of tubes inspected and the location of these tubes adjacent to the previously sleeved tubes indicates that the progression of IGA is slow and that current inspection requirements and practices are adequate.

As previously discussed in Section II.C.2, the above three tubes were removed from service by mechanical plugging.

VI. WRAPPER SUPPORT BAR INSPECTION

A. Introduction

The original wrapper support design for the Westinghouse Series 27 steam generator, including San Onofre Unit 1, included six symmetrically located and vertically positioned bars welded to the base of the wrapper on the inside diameter and threaded into the tubesheet. The wrapper rested on these bars and the bars were intended to accept the vertical wrapper loads specified in the steam generator equipment specification.

Subsequent modifications to Series 27 steam generators involved installing two brackets (Type I) in each steam generator, one end of the bracket welded to the transition section of the upper portion of the wrapper assembly with the other end attached to the feedwater ring bracket close to the steam generator shell. These brackets were designed to prevent vertical displacement of the wrapper assembly even if all of the existing wrappers support bars were not in place. In order to provide further support to the wrapper, these two support brackets were supplemented by a third bracket (Type II) welded to the wrapper and attached to the feedwater ring nozzle support.

During the secondary side visual inspections conducted in 1982, all but three of the wrapper support bars were found to be either broken or missing. The subsequent investigation required the loose support bars to be removed but allowed the three intact support bars to remain.

A commitment was made to visually inspect the intact wrapper support bars in SG-A and SG-B during the Cycle 11 Refueling Outage in References 1 and 2.

B. Results

A visual inspection of the intact wrapper support bars was conducted. The results of the inspection showed that the support bars are still intact and have not moved.

C. Conclusions

Based on the results of the wrapper support bar investigation documented in Reference 9 and the fact that the wrapper support bars in SG-A and SG-B remain intact, the wrapper support bars can be left in place without affecting tube integrity.

VII. STEAM GENERATOR INSPECTION SUMMARY AND CONCLUSIONS

A. Summary of Results

This inspection has demonstrated that only limited progression of previously identified degradation mechanisms has occurred. These mechanisms include secondary side degradation at the cold leg top of the tubesheet, primary side roll transition cracking, and secondary side circumferential degradation at the hot leg top of the tubesheet. Observed sleeve joint leakage during operation and during leak testing was within technical specification and design limits. A total of 3,949 tubes were inspected (39.5% of the tubes in service), and 29 tubes were removed from service by mechanical plugging.

This inspection has further demonstrated that sleeve joint leakage and the limited degradation progression can be monitored in subsequent inspections, and leaking or defective tubes removed from service in a timely manner.

The wrapper support bar visual inspection results demonstrate that the three remaining wrapper support bars in SG-A and SG-B are intact.

B. Conclusions

The information provided in Sections II through VI of this report establishes the basis for concluding the remedial action taken to resolve sleeve joint leakage and steam generator tube degradation identified during this inspection is appropriate. Accordingly, no further action is required and power operation can be safely resumed.

In regards to the wrapper support bars, the information provided in Section VII of this report and Reference 9 provides adequate basis for leaving the intact bars in SG-A and SG-B. To ensure these support bars remain intact, an inspection will be conducted during the next steam generator inspection.

In summary, the information presented in this report provides adequate basis for the approval of the corrective action taken at San Onofre Unit 1 as it relates to TS inspection of steam generator tubing.

VIII. REFERENCES

1. Letter, M. O. Medford (SCE) to USNRC (NRC), "Steam Generator Inspections," dated March 25, 1988

2. Letter, F. R. Nandy (SCE) to USNRC (NRC), "Steam Generator Inspection," dated December 23, 1988

3. Letter, G. W. Knighton (USNRC, NRR) to Harold B. Ray (SCE), "Order Confirming Licensee Commitments on Full-Term Operating License Open Items," dated January 2, 1990

4. "Technical Evaluation Report for Hybrid Sleeve," Westinghouse Electric Corporation Report No. NS-MFSE-81-054 dated March 1981 (Proprietary Version), Submitted by Letter K. P. Baskin (SCE) to D. M. Crutchfield (NRC), "Steam Generator Repair Program," dated March 5, 1981

5. Letter, M. O. Medford (SCE) to USNRC (NRC), "Steam Generator Inspection Report," dated April 14, 1986

6. Letter, M. O. Medford (SCE) to USNRC (NRC), "Steam Generator Inspection Report," dated May 23, 1988

7. Steam Generator Repair Program, Return to Power Report, San Onofre Unit 1, April 1981.

8. "1985 Re-Evaluation of Steam Generator Inspection Interval, San Onofre Nuclear Generating Station, Unit 1" dated March 1985, submitted by letter, M. O. Medford (SCE) to J. A. Zwolinski (NRC), March 19, 1985

9. Letter, K. P. Baskin (SCE) to D. M. Crutchfield (NRC), "Steam Generator Inspection Report," dated September 12, 1982

APPENDIX A

SG-A, SG-B, AND SG-C INSPECTION TUBESHEET MAPS

TUBESHEET MAP ILLUSTRATING TUBES INSPECTED IN THE 1990 INSERVICE INSPECTION

PLANT: SAN ONOFRE UNIT 1

GENERATOR: A

TOTAL TUBES: 3794
OUT OF SERVICE (●): 435

▲ = TUBES INSPECTED (2201)

TOTAL TUBES ASSIGNED: 2201

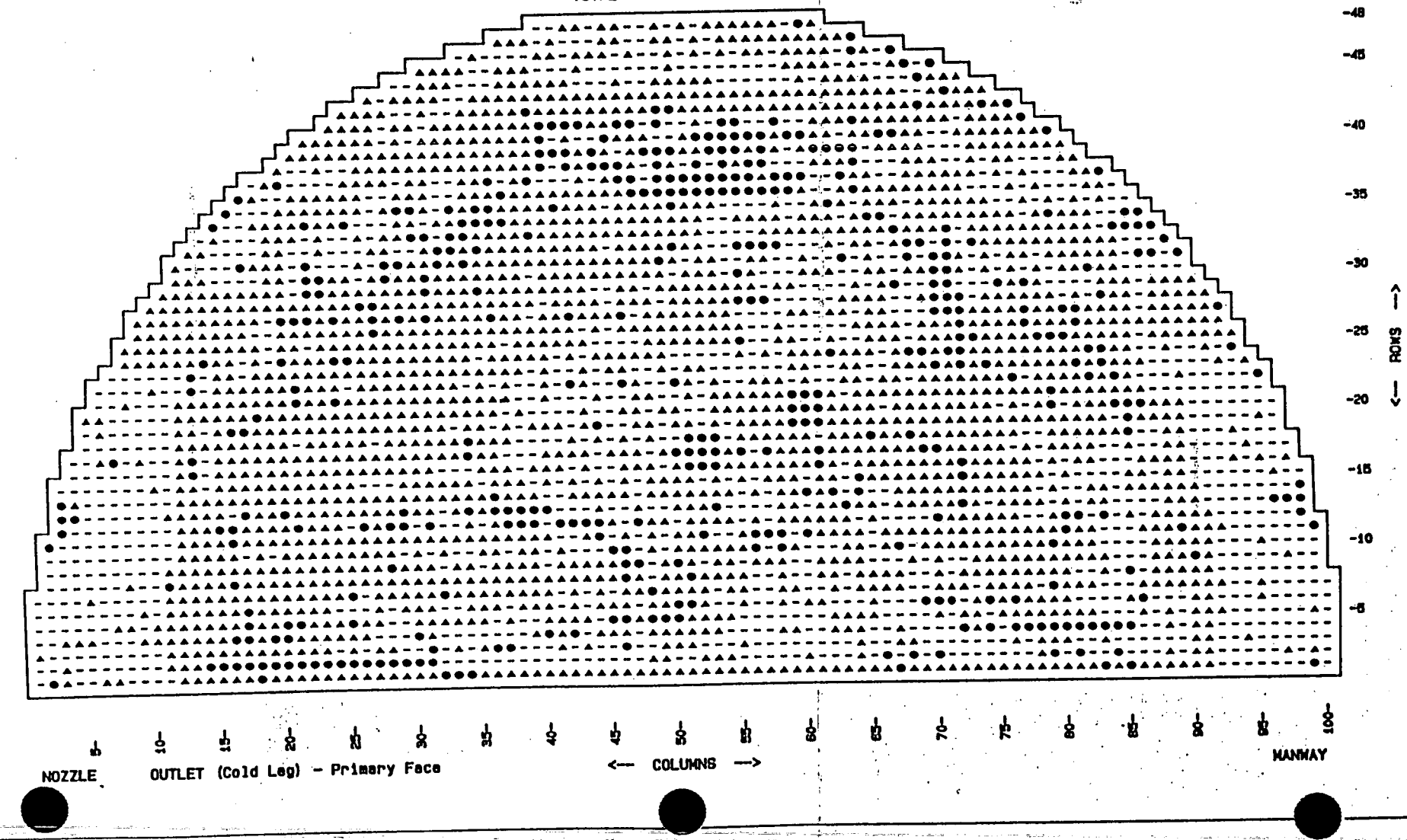

SCE TUBAN (TM) VER. 2.0

TUBESHEET MAP ILLUSTRATING TUBES INSPECTED IN THE 1990 INSERVICE INSPECTION

PLANT: SAN ONOFRE UNIT 1

GENERATOR: B

TOTAL TUBES: 3794
OUT OF SERVICE (●): 457

▲ = TUBES INSPECTED (1281)

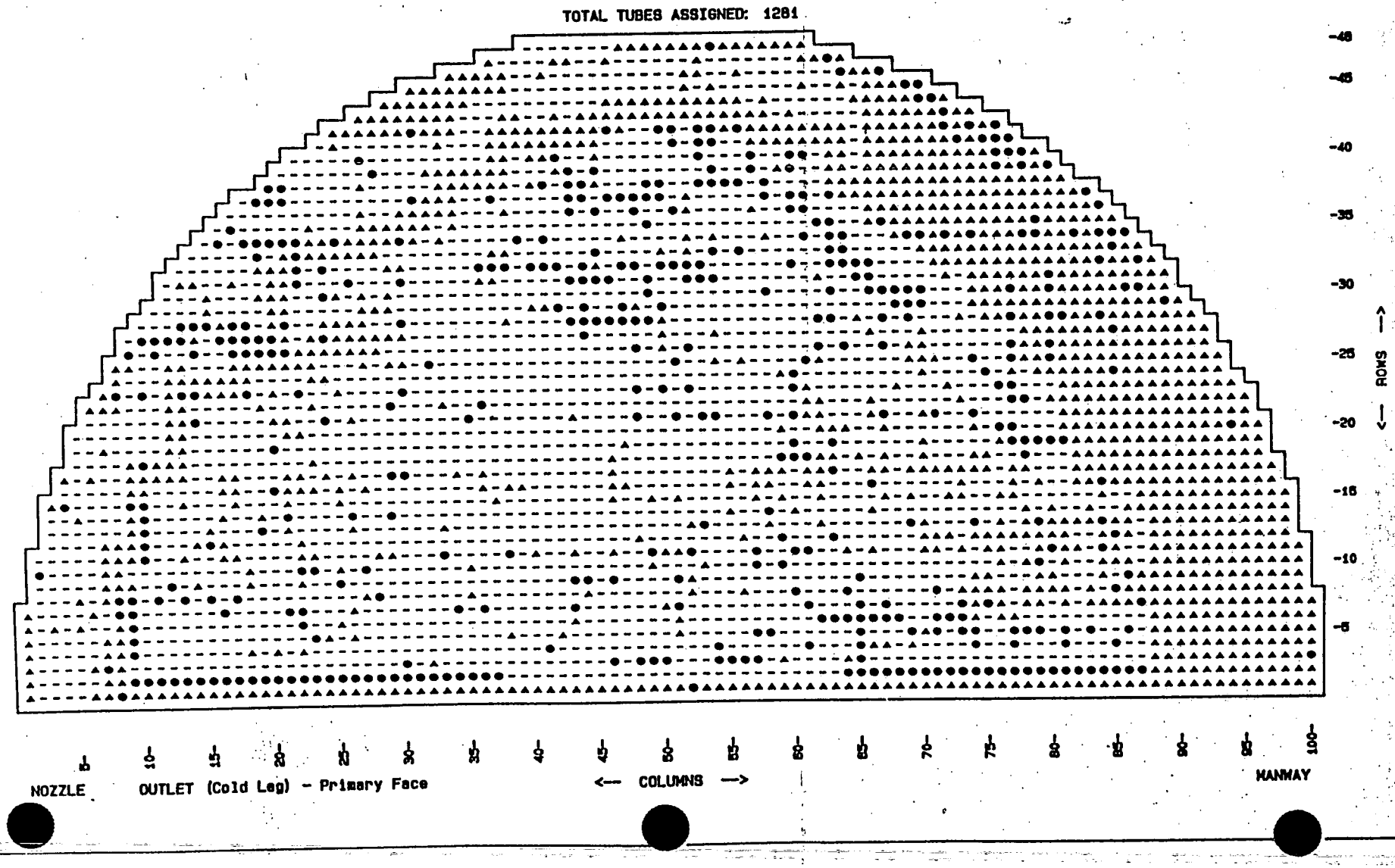

SCE TUBAN (TM) VER. 2.0

TUBESHEET MAP ILLUSTRATING TUBES INSPECTED IN THE 1990 INSERVICE INSPECTION

PLANT: SAN ONOFRE UNIT 1

GENERATOR: C

TOTAL TUBES: 3794
OUT OF SERVICE (●): 494

▲ - TUBES INSPECTED (467)

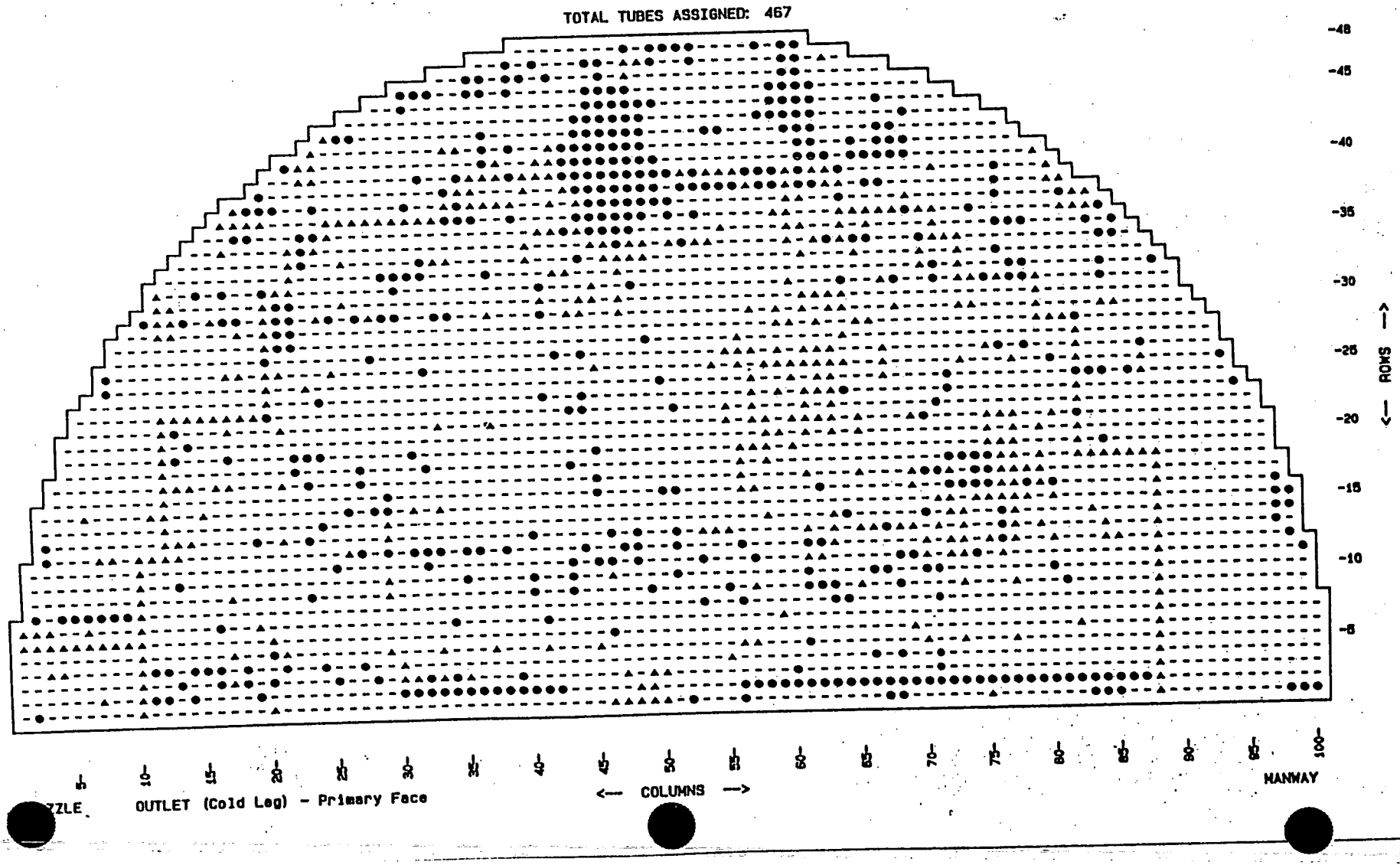

** SCE TUBAN (TM) VER. 2.0

APPENDIX B

STEAM GENERATOR TUBE AXIAL LOCATION ILLUSTRATION

SERIES 27

TUBE SUPPORT DIAGRAM

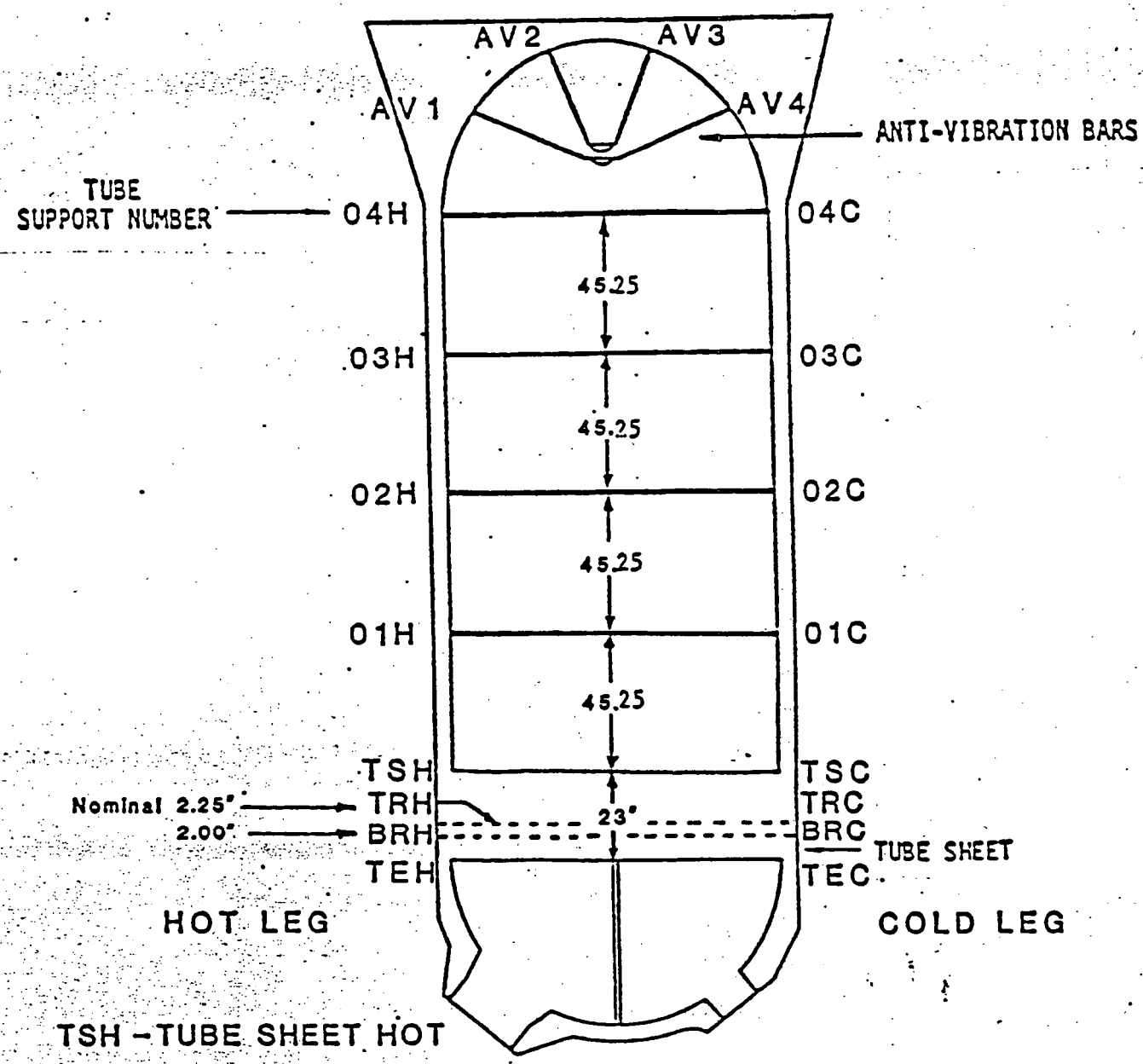

TSH – TUBE SHEET HOT

TRH – TOP OF ROLL HOT

BRH – BOTTOM OF ROLL HOT

TEH – TUBE END HOT

APPENDIX C

INSPECTION RESULTS FOR TUBES WITH DEFECTS BELOW THE UPPERMOST INCH OF SOUND ROLL

INSPECTION RESULTS FOR TUBES
WITH DEFECTS BELOW THE UPPERMOST INCH OF SOUND ROLL

SAN ONOFRE UNIT 1 STEAM GENERATORS

The purpose of this Appendix C is to provide inspection results in accordance with Technical Specification 4.16.D.5, for tubes in service which have defects below the uppermost one inch of tube roll expansion. All these tubes were identified during the 1988 Inservice Inspection and re-inspected during the 1990 Inservice Inspection. There were no additional tubes with imperfections below the uppermost inch of sound roll identified in the 1990 Inservice Inspection.

A listing of tubes in service which have defects below the uppermost one inch of tube roll expansion follows. Testing with an F Star type bobbin probe verified that the locations and sizes of imperfections remain below the uppermost one inch of sound roll.

SG	Tube Number Row - Column	Tube Number Row - Column	Tube Number Row - Column
A	4 - 3	29 - 16	
B	35 - 31	36 - 83	
C	6 - 1	7 - 1	6 - 2
	7 - 2	4 - 3	6 - 3
	7 - 3	4 - 4	6 - 4
	6 - 5	6 - 6	7 - 6
	15 - 6	2 - 7	6 - 7
	12 - 7	6 - 8	12 - 8
	6 - 9	30 - 13	29 - 16
	25 - 17	34 - 17	25 - 18
	28 - 18	37 - 18	1 - 20
	41 - 34	41 - 35	39 - 37
	40 - 38	47 - 48	47 - 49
	38 - 63	47 - 63	39 - 71
	1 - 75	36 - 81	29 - 84
	29 - 85	24 - 87	25 - 87

SUMMARY OF RECORDED INDICATIONS

AND

RESOLUTION

SUMMARY OF RECORDED INDICATIONS				
ISI DRAWING	ITEM	METHOD	EVALUATION	DISPOSITION
ISI-1-29A	B-18	PT	5/32" Rounded Indication 3/32" Rounded Indication	Accept, Ref. 1
ISI-1-29A	B-1	PT	two 1/8" Rounded Indications	Accept, Ref. 1
	Core Barrel Exterior	Visual VT-3	Indications located on Irradiation Baskets at 28 degrees 44 min. and the thermal shield flexures.	Accept, Ref. 2
ISI-1-1100	4C	UT	Indication found outside of the examination boundary.	Accept, Ref. 3

RECORDED INDICATION DISPOSITION

ACTION TAKEN

Reference 1: Rounded indications evaluated as acceptable per IAW SO1-XXVII-22.5 para 15.4.2 and acceptance criteria extracted from ASME III 74 ed. S75 Addenda NB 5352 as directed by SEC IWA 3100 of SEC XI 74 ed. S75 Addenda for acceptance criteria in the course of preparation.

Reference 2: Visual indications identified on the Irradiation Specimen Baskets as well as on the Core Barrel Support Blocks and Flexures had been previously identified and have been repaired via the Thermal Shield Core Barrel Repair Program and NCR # 90080190.

Reference 3: Indication identified was outside of the examination boundary and found to be acceptable by an evaluation in accordance with ASME Section XI 74 ed. S75 Addenda, IWB-3510.

CYCLE 11 OUTAGE

PERSONNEL AND EQUIPMENT

CERTFIFCATIONS AND QUALIFICATIONS

SCE Southern California Edison Company
SAN ONOFRE NUCLEAR GENERATING STATION
INSPECTION REPORT

Report No. IN-002

Page 1 of 2

Supplier ROCKWELL INTERNATIONAL

Purchase Order No. 8M030004\

Unit No. 1' Quality Class SR

Inspection Date 7-16-90 Time NA

Component Descrip. PERSONNEL CERTIFICATION REVIEW

Work Order No. NA

Section XI Traveler No. NA

Equip Tag/Serial # NA

Procedure No. TQAM 7D, PARA. 3.3

Location SONGS

Reference Drawing No. NA

Contact/Dept. ROBERT DELONG

NCR NA CAR NA DCP NA

REPORT SUMMARY

This Inspection Report is written to document the review of subcontractor, ROCKWELL INTERNATIONAL, for personnel certification.

Personnel conducting examinations and duties required by ASME Section III or XI must be qualified in accordance with a procedure prepared in accordance with ASNT-TC-1A. For Nondestructive Examinations not covered by the ASNT-TC-1A document, personnel shall be qualified by the agent to comparable levels of competency by subjection to comparable examinations on the particular method involved.

The review of Level I,II and III personnel have been evaluated To Rockwell International procedure "QUALIFICATION AND CERTIFICATION OF NDE PERSONNEL," "QAOP N6.02," dated 4-6-84, 4-25-89 and 3-30-90. The following personnel certifications have been evaluated to these procedures and determined to be acceptable to perform examinations in the discipline levels as shown.

NAME	METHOD	LEVEL	CERT. EXPIRATION	EYE TEST
Cutting, R.	UT ISI	IIA	8-90	6-21-90
Smith, N.	UT ISI	IIA	2-92	3-21-90
Waite, P	UT ISI	IIA	3-91	1-10-90
Harris, J.	UT ISI	IIA	3-91	3-20-90
Meister, C	UT	II	6-93	1-11-90

Distribution:
D. C. Stonecipher
R. P. Delong
B. A. Hammer
D. D. Cole
Technical Services QA
CDM SONGS

Inspected By [signature] Date 7-16-90 Stamp No. 21

Approved By [signature] Date 7-17-90

"...SEEKING CLARIFICATION, ATTENTION TO DETAIL..."SURVEILLANCE"..."WITH"..."FORTHRIGHTNESS..."
Mr. Howard P. Allen's Letter, March 26, 1985.

Component Descrip PERSONNEL CERTIFICATION REVIEW Report No. IN-002-90

NAME	METHOD	LEVEL	CERT. EXPIRATION	EYE TEST
Shaw, G.	UT ISI	I	12-91	6-4-90
Francisco, N.	UT ISI	I	12-91	11-28-89

The following Level III certifications were reviewed to verify that they met the qualification requirement of the respective procedure.

NAME	METHOD	LEVEL	CERT. EXPIRATION	EYE TEST
Donnelly, C.	RT	III		
	UT	III		
	PT	III		
Marshall, R.	UT	III ISI	2-94	6-4-90
	VT 1 & 3	III ISI	1-94	
Knox, C.	UT	III ISI	4-91	12-21-89
	VT 1 & 3	III ISI	2-95	
Johnson, W.	UT	III ISI	4-91	11-12-89
	VT 1 & 3	III ISI	3-95	
Hardy, R.	UT	III ISI	4-91	1-11-90
	VT 1 & 3	III ISI	2-95	
Richards, C.	UT	III ISI	6-92	2-9-90
	VT 1 & 3	III ISI	2-95	

Inspector's Stamp No. 21

SCE Southern California Edison Company
SAN ONOFRE NUCLEAR GENERATING STATION
INSPECTION REPORT

Report No. IN-001-96

Supplier EBASCO SERVICES INCORPORATED

Purchase Order No. 8M030004

t No. 1 Quality Class SR

Inspection Date 7-10-90 Time NA

Component Descrip. PERSONNEL CERTIFICATION REVIEW

Work Order No. NA

Section XI Traveler No. NA

Equip Tag/Serial # NA

Procedure No. TQAM 7D, PARA. 3.3

Location SONGS

Reference Drawing No. NA

Contact/Dept. ROBERT DELONG

NCR NA CAR NA DCP NA

REPORT SUMMARY

This Inspection Report is written to document the review of subcontractor, EBASCO SERVICES INCORPORATED, for personnel certification.

Personnel conducting examinations and duties required by ASME Section III or XI must be qualified in accordance with a procedure prepared in accordance with ASNT-TC-1A. For Nondestructive Examinations not covered by the ASNT-TC-1A document, personnel shall be qualified by the agent to comparable levels of competency by subjection to comparable examinations on the particular method involved.

The review of Level I,II and III personnel have been evaluated to EBASCO SERVICES INCORPORATED procedure "Training, Examination and Certification of Nondestructive Examination Personnel" "NDE-1," dated 6-1-90. The following personnel certifications have been evaluated to this procedure and determined to be acceptable to perform examinations in the discipline levels as shown.

NAME	METHOD	LEVEL	CERT. EXPIRATION	EYE TEST
Orihuela Jr. M.	MT	II	2-90	8-21-89
	UT	II	8-92	
Vano, R.	UT	I	8-92	9-11-89
	MT	I Trainee	11-92	
	PT	I	9-92	
Brannin, M.	UT	I Trainee	8-92	9-8-89
	PT	I Trainee	9-92	

Distribution:
D. C. Stonecipher
P. P. Delong
B. A. Hammer
D. D. Cole
Technical Services QA
CDM SONGS

Inspected By [signature] Date 7-16-90 Stamp No. ____

Approved By [signature] Date 7-17-90

"...SEEKING CLARIFICATION, ATTENTION TO DETAIL..."SURVEILLANCE"..."WITH"..."FORTHRIGHTNESS...,"
Mr. Howard P. Allen's Letter, March 26, 1985.

Component Descrip EBASCO PERSONNEL CERTIFICATION REVIEW Report No. IN-001-90

NAME	METHOD	LEVEL	CERT. EXPIRATION	EYE TEST
Garcia, A	RT	I	10-92	1-23-90
	UT	I Trainee	1-92	
	MT	I Trainee	1-93	
	PT	I Trainee	1-92	
Spindler, S.	UT	II	10-92	1-23-90
	PT	II	10-92	
Spelde, T.	UT	I	8-91	7-19-89
	MT	I	8-91	
	PT	II	12-92	
	ET	I Trainee	8-91	

The following Level III certifications were reviewed to verify that they met the qualification requirement of the respective procedure.

NAME	METHOD	LEVEL	CERT. EXPIRATION	EYE TEST
Paillaman, R.	UT	III	6-92	8-10-89
	VT 1-4	III	6-92	
Bullen, H.	RT	III	6-92	11-28-89
	UT	III	3-93	
	MT	III	6-92	
	PT	III	6-92	
	VT 1-4	III	3-93	
Bagley, J.	VT 1-4	III	11-91	1-12-90

INSPECTOR'S STAMP NO. 21

ISI

EXAMINATION PROCEDURES

UNIT 1 CYCLE 11

Unit #1
Cycle 11
Period #3 Outage #2

EXAMINATION PROCEDURES

The following qualified examination procedures were used for inservice and preservice examinations conducted during the Cycle 11 Refueling Outage.

NUMBER		TITLE
1. WESTINGHOUSE:		
SO1-W-ISI-8	Rev. 0	Visual Examination
SO1-W-ISI-70	Rev. 0	Magnetic Particle Examination
SO1-W-ISI-3.10	Rev. 0	Preservice and Inservice Examination Manual Ultrasonic Equipment Qualification
SO1-W-ISI-11	Rev. 0	Liquid Penetrant Examination
SO1-W-ISI-15	Rev. 0	Ultrasonic Examination of Studs, Bolts and Nuts
2. ROCKWELL/ROCKETDYNE:		
SO1-XXVII-20.6	Rev. 0	Inservice Inspection-Ultrasonic Examination of Reactor Vessel Integral Supports
SO1-XXVII-20.7	Rev. 0	Inservice Inspection-Ultrasonic Examination of Reactor Vessel Flange Ligament Areas
SO1-XXVII-20.8	Rev. 0	Inservice Inspection-Ultrasonic Examination of Reactor Nozzle Inside Radius Section
SO1-XXVII-20.9	Rev. 0	Inservice Inspection-Ultrasonic Examination of Reactor Vessel Circumferential and Longitudinal Shell Welds
SO1-XXVII-20.10	Rev. 0	Inservice Inspection-Ultrasonic Examination of the Reactor Flange to Vessel Weld from the Flange Surface

NUMBER		TITLE
SO1-XXVII-20.11	Rev. 0	Inservice Inspection-Ultrasonic Examination for Detection of Underclad Cracking and Examination for Near-Surface Reflectors from the Inside Surface
SO1-XXVII-20.12	Rev. 0	Inservice Inspection-Ultrasoinc Examination of Nuclear Reactor of Nozzle to Vessel Welds
SO1-XXVII-20.13	Rev. 0	Inservice Inspection-Ultrasoinc Examination of Nuclear Reactor Safe End-to-Nozzle Welds
SO1-XXVII-20.14	Rev. 0	Qualification and Certification of NDE Personnel

3. EBASCO:

SO1-XXVII-22.1	Rev. 0	Magnetic Particle Examination of Welds and Bolting
SO1-XXVII-22.2	Rev. 0	Procedure for Inspection System Performance Checks
SO1-XXVII-22.3	Rev. 0	Performance of RF Waveforms for Krautkramer USK Series UT Scopes
SO1-XXVII-22.4	Rev. 0	Remote Visual Examination of the Reactor Vessel Internals
SO1-XXVII-22.5	Rev. 0	Liquid Penetrant Examination (solvent removable methods)
SO1-XXVII-22.6	Rev. 0	UT Manual Examination of Class 1 Reactor Vessel Welds Covered by Reg. Guide 1.150
SO1-XXVII-22.7	Rev. 0	Ultrasonic Examination of Class 1 & 2 Piping Welds Joining Similar & Dissimilar Materials
SO1-XXVII-22.8	Rev. 0	Visual Examination
SO1-XXVII-22.9	Rev. 0	Training Examination & Certification of Nondestructive Examination Personnel
SO1-XXVII-22.10	Rev. 0	Ultrasonic Examination of RPV Closure Head Studs
SO1-XXVII-22.11	Rev. 0	Review, Approval and Control of Procedures and Instructions

ABSTRACT OF ASME XI REPAIRS AND REPLACEMENTS
UNIT 1 CYCLE 11 REFUELING OUTAGE

CODE CLASS	EQUIPMENT ID	MAINTENANCE ORDER	SECTION XI TRAVELER	NIS-2 SIGNED	DESCRIPTION/PSE	
1	S1015000H00A	91020840000		04/04/91	REPLACED SNUBBER	PSE=VT-3,4
1	S1015000H00C	90102669002		04/04/91	REPLACED SNUBBER	PSE=VT-3,4
1	S1015000H0FA	90102670001		04/04/91	REPLACED SNUBBER W/90102669	PSE=VT-3,4
1	S1015011H00NA	90082523000		02/21/91	REPLACED SNUBBER	PSE=VT-3,4
1	S1050318H013	90080611000		05/30/91	REPLACED SNUBBER	PSE=VT-3,4
1	S1LDSCV203	89111626000		03/21/91	REPLACED VALVE INTERNALS	PSE=VT-2
1	S1LDSCV526	90121256000		04/02/91	REPLACED VALVE DISC	PSE=VT-2
1	S1LDSLCV1112	90111198002		06/08/91	REPLACED VALVE INTERNALS & FASTENERS	PSE=VT-2
1	S1LDSLCV1112	91010916001		06/08/91	REPAIRED VALVE STEM. W/90111198	PSE=VT-2
1	S1MSSE1A	90081628004		06/12/91	REPLACED MW FASTENERS. W/90101833	PSE=VT-1,2
1	S1MSSE1A	90101833000		06/12/91	REPLACED MW FASTENERS W/90081628	PSE=VT-2
1	S1MSSE1B	90081629000		06/17/91	REPLACED MW FASTENERS. W/90101834	PSE=VT-1,2
1	S1MSSE1B	90101834000		06/15/91	REPLACED FASTENERS W/90081629	PSE=VT-1
1	S1MSSE1C	90081602000		06/07/91	REPLACED MW FASTENERS W/90101833	PSE=VT-1,2
1	S1MSSE1C	90101835000		06/07/91	REPLACED MW FASTENERS W/90081602	PSE=VT-1,2
1	S1PZRC2	90061212001		04/04/91	REPLACED CAP SCREWS	PSE=VT-1,2
1	S1PZRCV545	89111979002		04/29/91	REPAIRED GASKET SEATING SURFACE	PSE=VT-2
1	S1PZRPCV430H	89110419001		12/13/90	REPAIRED BONNET NIPPLE	PSE=VT-2
1	S1PZRRV532	89052422000		07/05/89	REPLACED RELIEF VALVE	PSE=VT-2
1	S1PZRRV532	89100177000		04/20/91	REPLACED RELIEF VALVE	PSE=VT-2
1	S1PZRRV532	89122251000	S01-90-018	06/07/91	REPLACED NOZZLE/DISC	PSE=NO
1	S1PZRRV532	90081434000	S01-90-028	04/28/91	REPLACED NOZZLE/DISC	PSE=NO
1	S1PZRRV533	89052421000		07/07/89	REPLACED 6" RELIEF VALVE	PSE=VT-2
1	S1PZRRV533	89053288000		07/07/89	REPLACED FASTENERS W/89052421	PSE=VT-2
1	S1PZRRV533	89100178000		04/04/91	REPLACED RELIEF VALVE	PSE=VT-2
1	S1PZRRV533	90081435000	S01-90-027	06/08/91	REPLACED NOZZLE/DISC	PSE=NO
1	S1PZZRRV533	89122256000	S01-90-019	05/28/91	REPLACED NOZZLE/DISC	PSE=NO
1	S1RCP2020-2"-BH2	90071543000		01/27/91	REPAIRED WELD JOINT	PSE=PT,VT-2
1	S1RCP2020-2"-BH2	90092221000		01/02/91	REPAIR-REMOVED INDENTATIONS FROM PIPE	PSE=NO
1	S1RCP303	90101857000		04/02/91	REPLACED .75" GLOBE VALVE	PSE=VT-2
1	S1RCPFCV1115A	90022755000		04/02/91	REPLACED VALVE INTERNALS	PSE=VT-2
1	S1RCPFCV1115B	89070368000		04/04/91	REPLACED VALVE INTERNALS	PSE=VT-2
1	S1RCSC1	89060538001		08/01/89	REPLACED CON'SEAL BOLTING W/89061146	PSE=VT-2
1	S1RCSC1	89061146001		08/01/89	REPLACED CON'SEAL BOLTING W/89060538	PSE=VT-2
1	S1RCSG2C	90012343000		05/09/91	REPLACED FASTENERS	PSE=VT-1,2
1	S1RCSTE410C	90110138000		04/03/91	REPLACED THM PLUG	PSE=VT-2
1	S1RHRMOV813	88090530000		04/30/91	REPLACED PACKING GLAND LEAK-OFF PLUG	PSE=VT-2
1	S1RHRMOV814	88090531000		04/30/91	REPLACED PACKING GLAND LEAK-OFF PLUG	PSE=VT-2
1	S1RHRMOV833	88090527000		04/30/91	REPLACED PACKING GLAND LEAK-OFF PLUG	PSE=VT-2
1	S1SIS340	90111481000		04/04/91	REPLACED PIPE CAP	PSE=VT-2
1	SIPZRRV532	90080760001		06/08/91	REPAIRED VALVE	PSE=NO
2	S1012055H00A	90102861001		03/12/91	REPLACED LOAD PIN	PSE=VT-3
2	S1013073H315	90091551000		01/27/91	REPAIRED SUPPORT	PSE=NO
2	S1013073H325	90091553000		02/05/91	REPAIRED SUPPORT	PSE=NO
2	S1050318H014	90101782000		02/14/91	REPLACED SNUBBER	PSE=VT-3,4
2	S1056002H008	90082392000		03/14/91	REPLACED SNUBBER	PSE=VT-3,4
2	S1056002H024	90082393000		02/15/91	REPLACED SNUBBER	PSE=VT-3,4
2	S1056004H012	90101817000		03/20/91	REPLACED LOAD STUD	PSE=VT-3,4
2	S1060015H011	90101818000		03/16/91	REPLACED LOAD STUD	PSE=VT-3,4
2	S1060317H016	90101807000		02/15/91	REPLACED SNUBBER	PSE=VT-3,4
2	S1060317H017	90101809001		02/15/91	REPLACED SNUBBER	PSE=VT-3,4
2	S1066003H007	91010509000		04/04/91	REPLACED BEARING ASSEMBLY	PSE=VT-3,4
2	S1066003H008	90102663000		02/14/91	REPLACED LOAD PIN	PSE=VT-1,3
2	S12002-2"-BH3	90010525000	S01-90-001	11/16/90	REPLACED FLOW TRANSMITTER	PSE=VT-2
2	S1AFWCV113	90013010002		04/24/91	REPLACED INTERNALS & BOLTING	PSE=VT-2
2	S1AFWSV2619	89090852000		04/02/91	REPLACED SOLENOID VALVE	PSE=VT-2
2	S1BASG948	89011456000		04/04/91	REPLACED CAPS SCREWS	PSE=VT-2
2	S1CRS337	90081729000		03/20/91	REPLACED VALVE	PSE=VT-2
2	S1CRS338	89060748002		03/20/91	REPAIRED LEAK-OFF PLUG	PSE=VT-2
2	S1CRS374	87040504001		03/02/90	REPLACED GLOBE VALVE	PSE=VT-2
2	S1CRSCONTSPRAY	90091282001		04/02/91	REPAIRED 6" PIPING	PSE=MT
2	S1CRSCV517	91020205000	S01-91-010	03/19/91	INSTALLED FLOW DIRECTION INDICATOR	PSE=NO
2	S1CRSCV518	91020207000	S01-91-011	03/19/91	INSTALLED FLOW DIRECTION INDICATOR	PSE=NO
2	S1CRSD1	89020162000		07/24/90	REPLACED MANWAY FASTENERS	PSE=VT-2
2	S1CRSG60	90021085001		04/23/90	REPLACED FASTENERS	PSE=VT-2
2	S1CRSRO525	90122174000	S01-91-004	02/08/91	REPLACED FLOW ORIFICE	PSE=VT-2
2	S1CRSRO526	90122173000	S01-91-003	02/08/91	REPLACED FLOW ORIFICE	PSE=VT-2

ABSTRACT OF ASME XI REPAIRS AND REPLACEMENTS
UNIT 1 CYCLE 11 REFUELING OUTAGE

CODE CLASS	EQUIPMENT ID	MAINTENANCE ORDER	SECTION XI TRAVELER	NIS-2 SIGNED	DESCRIPTION/PSE	
2	S1CRSRV882	90010412002		04/04/91	REPLACED VALVE DISC	PSE=VT-2
2	S1CRSSV2517	90081311	SO1-90-032	01/02/91	REPLACED ACTUATOR MOUNTING PLATE	PSE=NO
2	S1CRSSV2518	90081312	SO1-90-033	01/02/91	REPLACED ACTUATOR MOUNTING PLATE	PSE=NO
2	S1CRSXJ976	89120055000		11/07/90	REPLACED VALVE PARTS	PSE=VT-2
2	S1CVSCV40	91030337003		04/07/91	REPLACED PANCAKE FLANGE	PSE=NO
2	S1FHSXFERTUBE	90101760000		04/04/91	REPLACED BOLTING	PSE=VT-1
2	S1FWS339	88022081001		04/10/91	REPLACED GLOBE VALVE	PSE=VT-2
2	S1FWS341,342,343	91011984000		06/08/91	REPAIRED BLOWDOWN LN.	PSE=NO
2	S1FWS345	89071853001		04/28/91	REPLACED 10" VALVE DISC	PSE=VT-2
2	S1FWS346	89071854002		04/27/91	REPLACED 10" VALVE DISC	PSE=VT-2
2	S1FWS371	88090099001		06/07/91	REPLACED 2" CHECK VALVE DISC	PSE=VT-2
2	S1FWS373	88090096001		03/12/91	REPLACED GLOBE VALVE	PSE=VT-2
2	S1FWS376	90060430004		05/09/91	REPAIRED VALVE DISC	PSE=VT-2
2	S1FWS386	88090100001		06/07/91	REPLACED CHECK VALVE DISC	PSE=VT-2
2	S1FWS388	88090097001		03/12/91	REPLACED GLOBE VALVE	PSE=VT-2
2	S1FWS398	89071855003		04/24/91	REPLACED 10" VALVE DISC	PSE=VT-2
2	S1FWS410	88090101001		06/07/91	REPLACED CHECK VALVE DISC	PSE=VT-2
2	S1FWS412	88090098001		03/12/91	REPLACED 2" GLOBE VALVE	PSE=VT-2
2	S1FWS438	89071851002		04/24/91	REPLACED 12" VALVE DISC	PSE=VT-2
2	S1FWS439	89071852001		04/30/91	REPLACED 10" VALVE DISC	PSE=VT-2
2	S1FWSBLOWDOWN	91011057001		02/15/91	REPAIRED 2" PIPE	PSE=NO
2	S1FWSCV875A	90112220000	SO1-90-037	02/22/91	REPLACEMENT-ADDED VALVE BY-PASS	PSE=VT-2
2	S1FWSCV875A	90112220000	SO1-90-038	02/22/91	REPLACEMENT-ADDED VALVE BY-PASS	PSE=VT-2
2	S1FWSCV875B	89061998002		05/30/91	REPAIRED BONNET FLANGE	PSE=VT-2
2	S1FWSFCV456	89112543005		05/22/91	REPLACED DISC & FASTENERS	PSE=VT-2
2	S1FWSFCV456	90102864000		02/25/91	REPAIRED GAGE	PSE=NO
2	S1FWSFCV457	90012626003		04/24/91	REPLACED FASTENERS	PSE=VT-2
2	S1FWSG3A	90031945004		06/08/91	REPLACED FLANGE & BOLTING	PSE=VT-2
2	S1FWSG3A	90031985000		11/23/90	REMOVED NUT FROM PIPE FLANGE	PSE=NO
2	S1FWSR0897, 898	91010430000	SO1-91-002	02/09/91	REPLACED FLANGE STUDS	PSE=NO
2	S1FWSR0897A, 898A	91010429000	SO1-91-001	02/09/91	REPLACED FLANGE STUDS	PSE=NO
2	S1LDS2071	90060626	SO1-90-010	09/25/90	REPLACEMENT-INSTALLED CHECK VALVE	PSE=VT-2
2	S1LDSCV526	91020496000	SO1-91-013	03/19/91	INSTALLED FLOW DIRECTION INDICATOR	PSE=NO
2	S1MSS020	89111412002		06/07/91	REPLACED .75" GLOBE VALVE	PSE=VT-2
2	S1MSSCV76	90012997000		04/02/91	REPLACED VALVE INTERNALS	PSE=VT-2
2	S1MSSCV78	90020186001		04/07/91	REPLACED VALVE INTERNALS	PSE=VT-2
2	S1MSSD943	90011352000		04/05/90	REPAIRED PLUG	PSE=NO
2	S1MSSD943	90011442000		04/05/90	REPLACED PLUG W/90011352	PSE=VT-2
2	S1MSSPV1650	90091339000		05/09/91	REPAIRED VALVE DISC	PSE=VT-2
2	S1MSSPV1650	90091545000		05/09/91	REPAIRED VALVE BODY	PSE=VT-2
2	S1RCP2055-3/4"-BH2	90071545000		04/27/91	REPAIRED WELD JOINT	PSE=VT-2
2	S1RCP305	90101858000		04/02/91	REPLACED GLOBE VALVE	PSE=VT-2
2	S1RCP315	90120446000		03/12/91	REPAIRED 2" GLOBE VALVE	PSE=NO
2	S1RCPCV527	91020497000	SO1-91-014	03/19/91	INSTALLED FLOW DIRECTION INDICATOR	PSE=NO
2	S1RCPFCV1115C	90022761000		04/04/91	REPLACED VALVE INTERNALS	PSE=VT-2
2	S1RCPPSE1117A	91020903001		03/21/91	REPLACED 1" RUPTURED DISC	PSE=VT-2
2	S1RCPPSE1117B	91012230000	SO1-91-019	03/29/91	REPLACED RUPTURE DISC	PSE=VT-2
2	S1RCPPSE1117C	91012241000	SO1-91-018	03/29/91	REPLACED RUPTURE DISC	PSE=VT-2
2	S1RHR029	90103081001		04/04/91	REPLACED DISC ASSMBLY	PSE=VT-2
2	S1RHRE21B	89070307001		02/05/90	REPLACED FLANGE BOLTING	PSE=VT-2
2	S1RHRMOV822A	88090529000		04/30/91	REPLACED PACKING GLAND LEAK-OFF PLUG	PSE=VT-2
2	S1RHRMOV822B	88100558000		04/30/91	REPLACED PACKING GLAND LEAK-OFF PLUG	PSE=VT-2
2	S1RSSCV953	90081960001		04/24/91	REPLACED VALVE INTERNALS	PSE=VT-2
2	S1RSSCV955	89051750001		07/05/89	REPLACED FASTENERS & TUBE	PSE=VT-2
2	S1RSSCV955	89101012001		03/21/91	REPLACED VALVE INTERNALS	PSE=VT-2
2	S1RSSCV956	90121076	SO1-90-039	02/09/91	REPLACED TUBING	PSE=VT-2
2	S1RSSCV956	90121592	SO1-90-036	02/09/91	REPLACEMENT-RELOCATED CONTROL VALVE	PSE=VT-2
2	S1SCF358	90050986000		04/02/91	REPLACED .5" CHECK VALVE	PSE=VT-2
2	S1SCF359	90052123000		04/02/91	REPLACED CHECK VALVE	PSE=VT-2
2	S1SCF398	90050985000		04/02/91	REPLACED .5" CHECK VALVE	PSE=VT-2
2	S1SCF413	91030495000		04/04/91	REPLACED VALVE	PSE=VT-2
2	S1SHARV2003B	90010416002		06/12/91	REPLACED .75" RELIEF VALVE	PSE=VT-2
2	S1SIS003	89122214001		04/28/91	REPAIRED CHECK VALVE	PSE=VT-2
2	S1SIS302	89071268000		05/30/90	REPLACED 1" BOLTING	PSE=VT-2
2	S1SIS312	89070594000		08/09/89	REPLACED .5" PIPE	PSE=NO
2	S1SIS313	89062907001		08/14/89	REPLACED NIPPLE	PSE=VT-2.
2	S1SIS366	89060285000		06/23/89	REPAIRED .75" VALVE TO PIPE WELD	PSE=NO

ABSTRACT OF ASME XI REPAIRS AND REPLACEMENTS
UNIT 1 CYCLE 11 REFUELING OUTAGE

CODE CLASS	EQUIPMENT ID	MAINTENANCE ORDER	SECTION XI TRAVELER	NIS-2 SIGNED	DESCRIPTION/PSE	
2	S1SIS6004-1"-CL	90030632	SO1-90-008	03/07/91	REPLACED/ ADDED STRAINER	PSE=VT-2
2	S1SIS6005-1"-CL	90030634	SO1-90-009	03/07/91	REPLACEMENT-ADDED STRAINER TO SYSTEM	PSE=VT-2
2	S1SISSV2900	90061739	SO1-90-015	03/08/91	REPAIRED BONNET SEAL WELD	PSE=VT-2
2	S1SISSV3900	90061768	SO1-90-016	03/07/91	REPAIRED BONNET SEAL WELD	PSE=VT-2
2	S1TCW892-4"-HM	90080845	SO1-90-024	01/07/91	REPLACEMENT-REROUTED SYSTEM	PSE=VT-2
2	S1TCWCV2516	90080635	SO1-90-026	01/02/91	REPLACMENT-ADDED NEW CONTROL VALVE	PSE=VT-2
2	S1TCWCV3515	90080635000	SO1-90-025	02/02/91	REPLACEMENT-ADDED NEW CONTROL VALVE	PSE=VT-2
2	S1TCWCV515	91020491000	SO1-91-008	03/19/91	INSTALLED FLOW DIRECTION INDICATOR	PSE=NO
2	S1TCWCV516	91020488000	SO1-91-009	03/19/91	INSTALLED FLOW DIRECTION INDICATOR	PSE=NO
2	S1TCWCV525	91020495000	SO1-91-012	03/19/91	INSTALLED FLOW DIRECTION INDICATOR	PSE=NO
2	S1THPMOV14	89083644002		06/07/91	REPAIRED PACKING GLAND LEAK-OFF PLUG	PSE=NO
2	S1VCC2003-3"-BH3	90090911001		04/24/91	REPAIRED 2" PIPING	PSE=NO
2	S1VCC2013-1/2"-HK	91010368000		03/02/91	REPLACED PLUG	PSE=VT-2
2	S1VCC307	90070262000		04/20/91	REPLACED VALVE & PIPE	PSE=VT-2
2	S1VCC308	90070268000		05/09/91	REPLACED 2" GLOBE VALVE	PSE=VT-2
2	S1VCC354	89112850002		01/27/91	REPLACED VALVE W/90031813	PSE=VT-2
2	S1VCC354	90031813000		01/27/91	W/89112850	PSE=VT-2
2	S1VCCCV528	91020498000	SO1-91-015	03/19/91	INSTALLED FLOW DIRECTION INDICATOR	PSE=NO
2	S1VCCMOV1100C,E	90110760	SO1-90-035	02/23/91	REPLACED ADDED NEW MOV ARRAGEMENT	PSE=VT-2
2	S1VCCRV289	90010413001		05/15/91	REPLACED VALVE DISC	PSE=VT-2

NIS-2
OWNER'S REPORT OF REPAIR OR REPLACEMENT

As Required by the Provisions of ASME Code Section XI

1. Owner: Southern California Edison Company
   2244 Walnut Grove Ave., Rosemead, CA 91770

   ASME MO: 91020840

   Unit: 1

2. Plant: San Onofre Nuclear Generating Station
   P.O. Box 128, San Clemente, CA 92674-0128

   RS: GEN-004

3. Work Performed by: Southern California Edison

   P&ID: 5178100 (D-7)

4. System Identification: Reactor Coolant

5. (a) Applicable Construction Code: ASA B31.1, 1955 Edition, Code Classified XI-1, Code Cases: None

   (b) Applicable Edition of Section XI Utilized for Repairs or Replacements: 1977 Edition, S'78 Addenda, Code Cases: None

6. Identification of Components Repaired or Replaced:

Name of Component	Name of Manufacturer	Manufacturer Serial No.	National Board No.	Other Identification	Year Built	Repaired, Replaced, or Replacement	ASME Code Stamped Yes/No
Mechanical Snubber PSA 1-4	Pacific Scientific	13194	N/A	S1-01-5000-H-00A	N\A	Replaced	No
Mechanical Snubber PSA 1/4	Pacific Scientific	11157	N/A	RSO 2-P-170-84	1980	Replacement	No

7. Work Description:

   The mechanical snubber was replaced as a preventative maintenance action. The replacement snubber was verified as meeting the requirements of the original construction code, as documented in code reconciliation CR-90-002. Prior to installation, the snubber was functionally tested and visually inspected (VT-4). After installation, the support assembly was visually inspected (VT-3).

   Reference: NCR 91020073

8. Tests Conducted: System Leakage [ ] System Functional [ ] System Inservice [ ] Hydrostatic [ ] Pneumatic [ ] Other [X] VT-4 & VT-3
   Pressure: N/A psig Temp: N/A

FORM NIS-2 (back)

9. **Remarks:** None

(Applicable Manufacturer's Data Reports to be attached)

CERTIFICATE OF COMPLIANCE

We certify that the statements made in this report are correct and this replacement (repair or replacement) conforms to the rules of the ASME Code, Section XI.

Signed [signature] (Owner or Owner's Designee) Supvg. ASME Codes Engineer (Title) 4/3 (Date) 1991

CERTIFICATE OF INSPECTION

I, the undersigned holding a valid commission issued by the National Board of Boiler and Pressure Vessel Inspectors and the State or Province of California, employed by Arkwright Mutual Insurance Company (Factory Mutual System) of Norwood, Massachusetts have inspected the components described in this Owner's Report during the period from 2/9/91 to 3/21/91 and state that to the best of my knowledge and belief, this repair or replacement has been performed in accordance with Section XI of the ASME Code. By signing this certificate, neither the Inspector nor his employer makes any warranty, expressed or implied, concerning the repair or replacement in this Report. Furthermore, neither the Inspector nor his employer shall be liable in any manner for any personal injury or property damage or a loss of any kind arising from or connected with this inspection.

Howard O. Shofen Commissions 1574 California —
Inspector's Signature (State or Province, National Board)

Date April 4 1991

Note: Supplemental sheets in the form of lists, sketches, or drawings may be used provided (1) size is 8-1/2 in. x 11 in., (2) information in Items 1 through 4 on this data report is included on each sheet, and (3) each sheet is numbered and the number of sheets is recorded at the top of this form.

NIS-2

OWNER'S REPORT OF REPAIR OR REPLACEMENT

As Required by the Provisions of ASME Code Section XI

1. Owner: Southern California Edison Company
2244 Walnut Grove Ave., Rosemead, CA 91770

ASME MO: 90102669
90102670

Unit: 1

2. Plant: San Onofre Nuclear Generating Station
P.O. Box 128. San Clemente. CA 92674-0128

RS: GEN-004

3. Work Performed by: Southern California Edison

P&ID: 5178100 (E-7)

4. System Identification: Reactor Coolant

5. (a) **Applicable Construction Code:** ASA B31.1, 1955 Edition, Code Classified XI-1, Code Cases: None

(b) **Applicable Edition of Section XI Utilized for Repairs or Replacements:** 1977 Edition, S'78 Addenda, Code Cases: None

6. **Identification of Components Repaired or Replaced:**

Name of Component	Name of Manufacturer	Manufacturer Serial No.	National Board No.	Other Identification	Year Built	Repaired, Replaced, or Replacement	ASME Code Stamped Yes/No
Mechanical Snubber PSA-½ 650#	Pacific Scientific	8200	N/A	S1-01-5000-H-00C	N/A	Replaced	No
Mechanical Snubber PSA-½" 650#	Pacific Scientific	20221	N/A	RSO 4358-85	1984	Replacement	No
Mechanical Snubber PSA-½" 650#	Pacific Scientific	13105	N/A	S1-01-5000-H-OFA	N/A	Replaced	No
Mechanical Snubber PSA-½" 650#	Pacific Scientific	20366	N/A	RSO 5140	1986	Replacement	No

7. **Work Description:**

The mechanical snubbers were replaced as a preventative maintenance action. The replacement snubbers were verified as meeting the requirements of the original construction code, as documented in code reconciliation CR-90-002. Prior to installation, the snubber was functionally tested and visually inspected (VT-4). After installation, the support assembly was visually inspected (VT-3).

8. **Tests Conducted:** System Leakage [ ] System Functional [ ] System Inservice [ ] Hydrostatic [ ] Pneumatic [ ] Other [X] VT-4 & VT-3
Pressure: N/A psig Temp: N/A

FORM NIS-2 (back)

9. Remarks: None

(Applicable Manufacturer's Data Reports to be attached)

CERTIFICATE OF COMPLIANCE

We certify that the statements made in this report are correct and this replacement (repair or replacement) conforms to the rules of the ASME Code, Section XI.

Signed [signature] Supvg. ASME Codes Engineer 4/3 19 91
(Owner or Owner's Designee) Title (Date)

CERTIFICATE OF INSPECTION

I, the undersigned holding a valid commission issued by the National Board of Boiler and Pressure Vessel Inspectors and the State or Province of California, employed by Arkwright Mutual Insurance Company (Factory Mutual System) of Norwood, Massachusetts have inspected the components described in this Owner's Report during the period from 1/20/91 to 3/21/92 and state that to the best of my knowledge and belief, this repair or replacement has been performed in accordance with Section XI of the ASME Code. By signing this certificate, neither the Inspector nor his employer makes any warranty, expressed or implied, concerning the repair or replacement in this Report. Furthermore, neither the Inspector nor his employer shall be liable in any manner for any personal injury or property damage or a loss of any kind arising from or connected with this inspection.

Howard O Horton Commissions 1574 California
Inspector's Signature (State or Province, National Board)

Date April 4 19 91

Note: Supplemental sheets in the form of lists, sketches, or drawings may be used provided (1) size is 8-1/2 in. x 11 in., (2) information in Items 1 through 4 on this data report is included on each sheet, and (3) each sheet is numbered and the number of sheets is recorded at the top of this form.

NIS-2
OWNER'S REPORT OF REPAIR OR REPLACEMENT

As Required by the Provisions of ASME Code Section XI

1. Owner: Southern California Edison Company
2244 Walnut Grove Ave., Rosemead, CA 91770

ASME MO: 90082523

Unit: 1

2. Plant: San Onofre Nuclear Generating Station
P.O. Box 128, San Clemente, CA 92674-0128

RS: 320-90

3. Work Performed by: Southern California Edison

P&ID: 5178105

4. System Identification: Reactor Coolant

5. (a) **Applicable Construction Code:** ASA B31.1, 1980 Edition, Code Classified XI-1, Code Cases: None

(b) **Applicable Edition of Section XI Utilized for Repairs or Replacements:** 1977 Edition, S'78 Addenda, Code Cases: None

6. **Identification of Components Repaired or Replaced:**

Name of Component	Name of Manufacturer	Manufacturer Serial No.	National Board No.	Other Identification	Year Built	Repaired, Replaced, or Replacement	ASME Code Stamped Yes/No
Mechanical Snubber PSA ½	Pacific Scientific	13776	N/A	S1-01-5011-H-00N-A	N/A	Replaced	No
Mechanical Snubber PSA ½	Pacific Scientific	15166	N/A	RSO 4190-84	1980	Replacement	No

7. **Work Description:**

The mechanical snubber was replaced as a result of failing Technical Specification 4.14.C functional testing. The replacement was verified as meeting the requirements of the original construction code, as documented on code reconciliation CR-90-002. Prior to installation the snubber was functionally tested and visually inspected (VT-4). After installation the support assembly was visually inspected (VT-3).

Reference: NCR 9008021

8. **Tests Conducted:** System Leakage [ ] System Functional [ ] System Inservice [ ] Hydrostatic [ ] Pneumatic [ ] Other [X] VT-4 & VT-3
Pressure: N/A psig Temp: N/A

FORM NIS-2 (back)

9. **Remarks:** None

(Applicable Manufacturer's Data Reports to be attached)

CERTIFICATE OF COMPLIANCE

We certify that the statements made in this report are correct and this replacement (repair or replacement) conforms to the rules of the ASME Code, Section XI:

Signed [signature] (Owner or Owner's Designee) Supvg. ASME Codes Engineer (Title) 21 March 1991 (Date)

CERTIFICATE OF INSPECTION

I, the undersigned holding a valid commission issued by the National Board of Boiler and Pressure Vessel Inspectors and the State or Province of California, employed by Arkwright Mutual Insurance Company (Factory Mutual System) of Norwood, Massachusetts have inspected the components described in this Owner's Report during the period from 10/15/90 to 3/21/91 and state that to the best of my knowledge and belief, this repair or replacement has been performed in accordance with Section XI of the ASME Code. By signing this certificate, neither the Inspector nor his employer makes any warranty, expressed or implied, concerning the repair or replacement in this Report. Furthermore, neither the Inspector nor his employer shall be liable in any manner for any personal injury or property damage or a loss of any kind arising from or connected with this inspection.

[signature] Commissions 1862 California
Inspector's Signature (State or Province, National Board)

Date March 21, 1991

Note: Supplemental sheets in the form of lists, sketches, or drawings may be used provided (1) size is 8-1/2 in. x 11 in., (2) information in Items 1 through 4 on this data report is included on each sheet, and (3) each sheet is numbered and the number of sheets is recorded at the top of this form.

NIS-2
OWNER'S REPORT OF REPAIR OR REPLACEMENT

As Required by the Provisions of ASME Code Section XI

Sheet 1 of 1

1. Owner: Southern California Edison Company
2244 Walnut Grove Ave., Rosemead, CA 91770

ASME MO: 900S0611

Unit: 1

2. Plant: San Onofre Nuclear Generating Station
P.O. Box 128, San Clemente, CA 92674-0128

RS: 321-90

3. Work Performed by: Southern California Edison

P&ID: 5178205

4. System Identification: Feedwater Heating

5. (a) Applicable Construction Code: ANSI B31.1, 1980 Edition, Code Classified XI-2, Code Cases: None

(b) Applicable Edition of Section XI Utilized for Repairs or Replacements: 1977 Edition, S'78 Addenda, Code Cases: None

6. Identification of Components Repaired or Replaced:

Name of Component	Name of Manufacturer	Manufacturer Serial No.	National Board No.	Other Identification	Year Built	Repaired, Replaced, or Replacement	ASME Code Stamped Yes/No
Mechanical Snubber	Pacific Scientific	16853	N/A	S1-05-0318-E-013	N/A	Replaced	No
Mechanical Snubber	Pacific Scientific	15265	N/A	RSO 2-P-358-84 Part # 1801103-07	1983	Replacement	No

7. Work Description:

The mechanical snubber was replaced as a result of failing Technical Specification 4.14.C functional testing. The replacement was verified as meeting the requirements of the original construction code, as documented on code reconciliation CR-90-002. Prior to installation the snubber was functionally tested and visually inspected (VT-4). After installation the support assembly was visually inspected (VT-3).

References: NCR 90080044

8. Tests Conducted: System Leakage [ ] System Functional [ ] System Inservice [ ] Hydrostatic [ ] Pneumatic [ ] Other [ ]

FORM NIS-2 (back)

9. **Remarks:** None

(Applicable Manufacturer's Data Reports to be attached)

CERTIFICATE OF COMPLIANCE

We certify that the statements made in this report are correct and this replacement (repair or replacement) conforms to the rules of the ASME Code, Section XI.

Signed [signature] (Owner or Owner's Designee) Supvg. ASME Codes Engineer (Title) 29 May (Date) 1991

CERTIFICATE OF INSPECTION

I, the undersigned holding a valid commission issued by the National Board of Boiler and Pressure Vessel Inspectors and the State or Province of California, employed by Arkwright Mutual Insurance Company (Factory Mutual System) of Norwood, Massachusetts have inspected the components described in this Owner's Report during the period from 10/15/90 to 5/30/91 and state that to the best of my knowledge and belief, this repair or replacement has been performed in accordance with Section XI of the ASME Code. By signing this certificate, neither the Inspector nor his employer makes any warranty, expressed or implied, concerning the repair or replacement in this Report. Furthermore, neither the Inspector nor his employer shall be liable in any manner for any personal injury or property damage or a loss of any kind arising from or connected with this inspection.

[signature] Commissions 1862 California

Inspector's Signature (State or Province, National Board)

Date May 30, 1991

Note: Supplemental sheets in the form of lists, sketches, or drawings may be used provided (1) size is 8-1/2 in. x 11 in., (2) information in Items 1 through 4 on this data report is included on each sheet, and (3) each sheet is numbered and the number of sheets is recorded at the top of this form.

NIS-2
OWNER'S REPORT OF REPAIR OR REPLACEMENT

As Required by the Provisions of ASME Code Section XI

1. Owner: Southern California Edison Company
   2244 Walnut Grove Ave., Rosemead, CA 91770

2. Plant: San Onofre Nuclear Generating Station
   P.O. Box 128, San Clemente, CA 92674-0128

3. Work Performed by: Southern California Edison

4. System Identification: Letdown

ASME MO: 89111626

Unit: 1

RS: 092-90

P&ID: 5178130 (F-6)

5. (a) Applicable Construction Code: Westinghouse E-Spec. 676044, Code Classified: XI-1, Code Cases: None

   (b) Applicable Edition of Section XI Utilized for Repairs or Replacements: 1977 Edition, S'78 Addenda, Code Cases: None

6. Identification of Components Repaired or Replaced:

Name of Component	Name of Manufacturer	Manufacturer Serial No.	National Board No.	Other Identification	Year Built	Repaired, Replaced, or Replacement	ASME Code Stamped Yes/No
Globe Valve	BS&B	70-71415	N/A	S1-LDS-CV-203	N/A	---	No
Inner Valve with Integral Stem	Anchor Darling	Ht. 696831	N/A	RSO 2377-90	N/A	Replacement	No

7. Work Description:

The valve leaked through. The stem and inner valve required replacement. The replacements were verified to be in compliance with the original construction code and installed. A VT-2 examination was conducted in conjunction with a system leakage pressure test with no leakage noted.
Reference: NCR SO1-P-7416

8. Tests Conducted: System Leakage [X] System Functional [ ] System Inservice [ ] Hydrostatic [ ] Pneumatic [ ] Other [ ]
   Pressure: 350 psig Temp: 270 °F

FORM NIS-2 (back)

9. **Remarks:** None

(Applicable Manufacturer's Data Reports to be attached)

CERTIFICATE OF COMPLIANCE

We certify that the statements made in this report are correct and this replacement (repair or replacement) conforms to the rules of the ASME Code, Section XI.

Signed [signature] (Owner or Owner's Designee) Supvg. ASME Codes Engineer (Title) 21 March 1991 (Date)

CERTIFICATE OF INSPECTION

I, the undersigned holding a valid commission issued by the National Board of Boiler and Pressure Vessel Inspectors and the State or Province of California, employed by Arkwright Mutual Insurance Company (Factory Mutual System) of Norwood, Massachusetts have inspected the components described in this Owner's Report during the period from 9/1/90 to 3/21/91 and state that to the best of my knowledge and belief, this repair or replacement has been performed in accordance with Section XI of the ASME Code. By signing this certificate, neither the Inspector nor his employer makes any warranty, expressed or implied, concerning the repair or replacement in this Report. Furthermore, neither the Inspector nor his employer shall be liable in any manner for any personal injury or property damage or a loss of any kind arising from or connected with this inspection.

[signature] Commissions 1862 California
Inspector's Signature (State or Province, National Board)

Date March 21, 1991

Note: Supplemental sheets in the form of lists, sketches, or drawings may be used provided (1) size is 8-1/2 in. x 11 in., (2) information in Items 1 through 4 on this data report is included on each sheet, and (3) each sheet is numbered and the number of sheets is recorded at the top of this form.

NIS-2

OWNER'S REPORT OF REPAIR OR REPLACEMENT

As Required by the Provisions of ASME Code Section XI

1. Owner: Southern California Edison Company
2244 Walnut Grove Ave., Rosemead, CA 91770

ASME MO: 90121256

Unit: 1

2. Plant: San Onofre Nuclear Generating Station
P.O. Box 128, San Clemente, CA 92674-0128

RS: 394-90

3. Work Performed by: Southern California Edison

P&ID: 5178140

4. System Identification: Letdown

5. (a) Applicable Construction Code: SEP-403, Rev.1/ANSI B31.1, 1973 Edition, Code Classified XI-1, Code Cases: None

(b) Applicable Edition of Section XI Utilized for Repairs or Replacements: 1977 Edition, S'78 Addenda, Code Cases: None

6. Identification of Components Repaired or Replaced:

Name of Component	Name of Manufacturer	Manufacturer Serial No.	National Board No.	Other Identification	Year Built	Repaired, Replaced, or Replacement	ASME Code Stamped Yes/No
2" Ball Valve	Crosby Valve & Gage	5091	N/A	S1-LDS-CV-526	N/A	---	No
2" Ball (Disc)	Crosby Valve & Gage	801390-31-0001	N/A	ESO 1283-89	1988	Replacement	No

7. Work Description:

The valve failed the LLRT and required rework. The ball (disc) was replaced. The replacement was verified to be in compliance with the original construction code requirements.

8. Tests Conducted: System Leakage [ ] System Functional [X] System Inservice [ ] Hydrostatic [ ] Pneumatic [ ] Other [ ]
Pressure: 370 psig Temp: N/A

FORM NIS-2 (back)

9. **Remarks:** None

(Applicable Manufacturer's Data Reports to be attached)

CERTIFICATE OF COMPLIANCE

We certify that the statements made in this report are correct and this replacement (repair or replacement) conforms to the rules of the ASME Code, Section XI.

Signed [signature] Supvg. ASME Codes Engineer 4/2 19 91
(Owner or Owner's Designee) Title (Date)

CERTIFICATE OF INSPECTION

I, the undersigned holding a valid commission issued by the National Board of Boiler and Pressure Vessel Inspectors and the State or Province of California, employed by Arkwright Mutual Insurance Company (Factory Mutual System) of Norwood, Massachusetts have inspected the components described in this Owner's Report during the period from 2/1/91 to 4/2/91 and state that to the best of my knowledge and belief, this repair or replacement has been performed in accordance with Section XI of the ASME Code. By signing this certificate, neither the Inspector nor his employer makes any warranty, expressed or implied, concerning the repair or replacement in this Report. Furthermore, neither the Inspector nor his employer shall be liable in any manner for any personal injury or property damage or a loss of any kind arising from or connected with this inspection.

[signature] Commissions 1862 California
Inspector's Signature (State or Province, National Board)

Date April 2, 1991

Note: Supplemental sheets in the form of lists, sketches, or drawings may be used provided (1) size is 8-1/2 in. x 11 in., (2) information in Items 1 through 4 on this data report is included on each sheet, and (3) each sheet is numbered and the number of sheets is recorded at the top of this form.

NIS-2
OWNER'S REPORT OF REPAIR OR REPLACEMENT

As Required by the Provisions of ASME Code Section XI

1. Owner: Southern California Edison Company
2244 Walnut Grove Ave., Rosemead, CA 91770

ASME MO: 90111198
91010916

Unit: 1

2. Plant: San Onofre Nuclear Generating Station
P.O. Box 128, San Clemente, CA 92674-0128

RS: 006-91
010-91

3. Work Performed by: Southern California Edison

P&ID: 5178130

4. System Identification: Letdown

5. (a) Applicable Construction Code: Westinghouse E-Specification 676044, Code Classified XI-1, Code Cases: None

(b) Applicable Edition of Section XI Utilized for Repairs or Replacements: 1977 Edition, S'78 Addenda, Code Cases: None

6. Identification of Components Repaired or Replaced:

Name of Component	Name of Manufacturer	Manufacturer Serial No.	National Board No.	Other Identification	Year Built	Repaired, Replaced, or Replacement	ASME Code Stamped Yes/No
2" Control Valve	BS&B	70-71402	N/A	S1-LDS-LVC-1112	N/A	---	No
Inner Valve Assembly	Anchor Darling	A0803	N/A	RSO 006-91 ME-91-001	1986	Replacement	No
3/4" x 3½ Stud	Carpenter Tech.	48368	N/A	RSO 0300-87 SA-193, Gr B8	N/A	Replacement	No
3/4"-10 H.H. Nut	A&G Engineering	8650125	N/A	RSO 3052-86 SA-194	N/A	Replacement	No

7. Work Description:

MO #90111198
The inner valve and bolting required replacement. The replacements were verified as complying with the original construction code requirements.

MO #91010916
The valve stem was too long, which would not allow for proper alignment. The valve stem was cut to length to allow for proper alignment. An NDE/UT and PT were performed.

Reference: NCR 90110124, ME-91-001, ME-91-002, ME-91-003

8. Tests Conducted: System Leakage [X] System Functional [ ] System Inservice [ ] Hydrostatic [ ] Pneumatic [ ] Other [ ]
Pressure: 2085 psig Temp: 540 °F

FORM NIS-2 (back)

9. **Remarks:** None

(Applicable Manufacturer's Data Reports to be attached)

CERTIFICATE OF COMPLIANCE

We certify that the statements made in this report are correct and this replacement (repair or replacement) conforms to the rules of the ASME Code, Section XI.

Signed [signature] (Owner or Owner's Designee) Supvg. ASME Codes Engineer (Title) 6/8 (Date) 19 91

CERTIFICATE OF INSPECTION

I, the undersigned holding a valid commission issued by the National Board of Boiler and Pressure Vessel Inspectors and the State or Province of California, employed by Arkwright Mutual Insurance Company (Factory Mutual System) of Norwood, Massachusetts have inspected the components described in this Owner's Report during the period from 1/13/91 to 6/8/91 and state that to the best of my knowledge and belief, this repair or replacement has been performed in accordance with Section XI of the ASME Code. By signing this certificate, neither the Inspector nor his employer makes any warranty, expressed or implied, concerning the repair or replacement in this Report. Furthermore, neither the Inspector nor his employer shall be liable in any manner for any personal injury or property damage or a loss of any kind arising from or connected with this inspection.

[signature] Commissions 1862 California
Inspector's Signature (State or Province, National Board)

Date June 8, 19 91

Note: Supplemental sheets in the form of lists, sketches, or drawings may be used provided (1) size is 8-1/2 in. x 11 in., (2) information in Items 1 through 4 on this data report is included on each sheet, and (3) each sheet is numbered and the number of sheets is recorded at the top of this form.

NIS-2

OWNER'S REPORT OF REPAIR OR REPLACEMENT

As Required by the Provisions of ASME Code Section XI

Sheet 1 of 1

1. Owner: Southern California Edison Company
2244 Walnut Grove Ave., Rosemead, CA 91770

ASME MO: 90081628
90101833

Unit: 1

2. Plant: San Onofre Nuclear Generating Station
P.O. Box 128, San Clemente, CA 92674-0128

RS: 305-90
339-90

3. Work Performed by: Southern California Edison

P&ID: 5178225

4. System Identification: Main Steam

5. (a) Applicable Construction Code: ASME Section VIII, 1962 Edition, S'64 Addenda, Code Classified XI-1, Code Cases: 127ON

(b) Applicable Edition of Section XI Utilized for Repairs or Replacements: 1977 Edition, S'78 Addenda, Code Cases: None

6. Identification of Components Repaired or Replaced:

Name of Component	Name of Manufacturer	Manufacturer Serial No.	National Board No.	Other Identification	Year Built	Repaired, Replaced, or Replacement	ASME Code Stamped Yes/No
Steam Generator	Westinghouse	16A4320-3	542	S1-MSS-E-1A	1965	---	Yes
(6) 1.75" MW Studs	CE	Ht. J-6416-1	N/A	RSO 0215-86 SA-193, Gr B7	1986	Replacement	No
(7) 1.75" MW Nut	Arg. Eng. Co. Inc.	Ht. CD "CDZ"	N/A	RSO 2562-90 SA-194, Gr B7	1986	Replacement	No
(4) 1.75" Helicoils	Westinghouse	Ht. 11004	N/A	RSO 2603-90 SA-479, Tp. 302	1986	Replacement	No

7. Work Description:

MO 90101833 - Steam generator manway studs were replaced in hole locations H1, H5, H6, C4, C10, and C-14. Manway nuts were replaced in hole locations H1, H3, H5, H6, H11, H12 and H15.

MO 90081628 - Helicoils were installed in hole locations H1, H5, H6, and C4.

The replacement studs, nuts, and helicoils were verified to be compatible with installation and system requirements. A satisfactory final VT-1 was conducted in the replacement.

References: NCR 9008020001, 9010128

8. Tests Conducted: System Leakage [X] System Functional [ ] System Inservice [ ] Hydrostatic [ ] Pneumatic [ ] Other [ ]
Pressure: 2085 psig Temp: 540 °F

FORM NIS-2 (back)

9. **Remarks:** None

(Applicable Manufacturer's Data Reports to be attached)

CERTIFICATE OF COMPLIANCE

We certify that the statements made in this report are correct and this replacement (repair or replacement) conforms to the rules of the ASME Code, Section XI.

Signed [signature] (Owner or Owner's Designee) Supvg. ASME Codes Engineer (Title) 6/12 (Date) 19 91

CERTIFICATE OF INSPECTION

I, the undersigned holding a valid commission issued by the National Board of Boiler and Pressure Vessel Inspectors and the State or Province of California, employed by Arkwright Mutual Insurance Company (Factory Mutual System) of Norwood, Massachusetts have inspected the components described in this Owner's Report during the period from 10/12/89 to 6/12/91 and state that to the best of my knowledge and belief, this repair or replacement has been performed in accordance with Section XI of the ASME Code. By signing this certificate, neither the Inspector nor his employer makes any warranty, expressed or implied, concerning the repair or replacement in this Report. Furthermore, neither the Inspector nor his employer shall be liable in any manner for any personal injury or property damage or a loss of any kind arising from or connected with this inspection.

[signature] Commissions 1862 California
Inspector's Signature (State or Province, National Board)

Date June 12, 1991

Note: Supplemental sheets in the form of lists, sketches, or drawings may be used provided (1) size is 8-1/2 in. x 11 in., (2) information in Items 1 through 4 on this data report is included on each sheet, and (3) each sheet is numbered and the number of sheets is recorded at the top of this form.

NIS-2
OWNER'S REPORT OF REPAIR OR REPLACEMENT

As Required by the Provisions of ASME Code Section XI

1. **Owner:** Southern California Edison Company
2244 Walnut Grove Ave., Rosemead, CA 91770

ASME MO: 89100192
90081629
90101834

Unit: 1

2. **Plant:** San Onofre Nuclear Generating Station
P.O. Box 128, San Clemente, CA 92674-0128

RS: 306-90
356-90

3. **Work Performed by:** Southern California Edison

P&ID: 5178225

4. **System Identification:** Main Steam

5. (a) **Applicable Construction Code:** ASME VIII, 1962 Edition, S'64 Addenda, Code Classified XI-1, Code Cases: None

(b) **Applicable Edition of Section XI Utilized for Repairs or Replacements:** 1977 Edition, S'78 Addenda, Code Cases: None

6. **Identification of Components Repaired or Replaced:**

Name of Component	Name of Manufacturer	Manufacturer Serial No.	National Board No.	Other Identification	Year Built	Repaired, Replaced, or Replacement	ASME Code Stamped Yes/No
Steam Generator	Westinghouse	16A4320-1		S1-MSS-E-1B		---	Yes
1 3/4" MW Studs (6)	CE	Ht. J-6416-1	N/A	RSO 0215-86 H1,8,9,13 & 14	1986	Replacement	No
Nuts (3)	A&G Engineering	Ht. Code "CD2"	N/A	RSO 2562-90	N/A	Replacement	No
Helicoils (2)	Westinghouse	Ht. 11004	N/A	RSO 2603-90	1986	Replacement	No

7. **Work Description:**

Steam generator bolting (i.e., studs, nuts, and helicoils) which had relevant conditions noted during visual (VT-1) inspection were replaced. The replacements were verified to be in compliance with the original construction code requirements.

Three nuts on the hot leg side which had relevant condition were replaced without adequate documentation. This condition was documented on a nonconformance report and tracibility was verified. A subsequent VT-1 examination was conducted with no relevant indication noted. A VT-2 examination was conducted during a system pressure test.

Reference: NCR 91060043

8. **Tests Conducted:** System Leakage [X] System Functional [ ] System Inservice [ ] Hydrostatic [ ] Pneumatic [ ] Other [ ]
Pressure: 2085 psig Temp: 540°F

FORM NIS-2 (back)

9. **Remarks:** None

(Applicable Manufacturer's Data Reports to be attached)

CERTIFICATE OF COMPLIANCE

We certify that the statements made in this report are correct and this replacement (repair or replacement) conforms to the rules of the ASME Code, Section XI.

Signed [signature] (Owner or Owner's Designee) Supvg. ASME Codes Engineer (Title) 6/17 (Date) 19 91

CERTIFICATE OF INSPECTION

I, the undersigned holding a valid commission issued by the National Board of Boiler and Pressure Vessel Inspectors and the State or Province of California, employed by Arkwright Mutual Insurance Company (Factory Mutual System) of Norwood, Massachusetts have inspected the components described in this Owner's Report during the period from 03/15/90 to 06/17/91 and state that to the best of my knowledge and belief, this repair or replacement has been performed in accordance with Section XI of the ASME Code. By signing this certificate, neither the Inspector nor his employer makes any warranty, expressed or implied, concerning the repair or replacement in this Report. Furthermore, neither the Inspector nor his employer shall be liable in any manner for any personal injury or property damage or a loss of any kind arising from or connected with this inspection.

[signature] Commissions 1864 California
Inspector's Signature (State or Province, National Board)

Date June 17 19 91

Note: Supplemental sheets in the form of lists, sketches, or drawings may be used provided (1) size is 8-1/2 in. x 11 in., (2) information in Items 1 through 4 on this data report is included on each sheet, and (3) each sheet is numbered and the number of sheets is recorded at the top of this form.

NIS-2
OWNER'S REPORT OF REPAIR OR REPLACEMENT

As Required by the Provisions of ASME Code Section XI

1. **Owner:** Southern California Edison Company
   2244 Walnut Grove Ave., Rosemead, CA 91770

   ASME MO: 89100193
   90081602
   90101835

   Unit: 1

2. **Plant:** San Onofre Nuclear Generating Station
   P.O. Box 128, San Clemente, CA 92674-0128

   RS: 304-90
   346-90

3. **Work Performed by:** Southern California Edison

   P&ID: 5178225

4. **System Identification:** Main Steam

5. (a) **Applicable Construction Code:** ASME Section VIII-1, 1962 Edition, S'64 Addenda, Code Classified XI-1, Code Case: 1270N

   (b) **Applicable Edition of Section XI Utilized for Repairs or Replacements:** 1977 Edition, S'78 Addenda, Code Cases: None

6. **Identification of Components Repaired or Replaced:**

Name of Component	Name of Manufacturer	Manufacturer Serial No.	National Board No.	Other Identification	Year Built	Repaired, Replaced, or Replacement	ASME Code Stamped Yes/No
Steam Generator	Westinghouse	16A4320-3	542	S1-MSS-E-1C	1965	---	Yes
Manway Cover Stud Hot Leg #12	CE PMC Corp.	J-6416 HC. 74935	N/A	SA 193-B7 RSO 215-86	1986	Replaced	No
Manway Cover Stud Cold Leg #2, 3 & 13	CE PMC Corp.	J-6416 HC. 74935	N/A	SA 193-B7 RSO 215-86	1986	Replaced	No

7. **Work Description:**

   Replaced one (1) manway cover stud on the hot leg side and three (3) manway cover studs on the cold leg side of the addressed steam generator. The replacement studs were verified to be in compliance with the original construction code requirements. A satisfactory VT-1 examination was conducted on the replacement studs in conjunction with the replacement studs for all three (3) steam generators as documented on MO 90081629. A VT-2 examination was conducted in conjunction with a system leakage test.

   Reference: NCR 90080175

8. **Tests Conducted:** System Leakage [X] System Functional [ ] System Inservice [ ] Hydrostatic [ ] Pneumatic [ ] Other [ ]
   Pressure: 2080 psig Temp: 545°F

FORM NIS-2 (back)

9. **Remarks:** None

(Applicable Manufacturer's Data Reports to be attached)

CERTIFICATE OF COMPLIANCE

We certify that the statements made in this report are correct and this replacement (repair or replacement) conforms to the rules of the ASME Code, Section XI.

Signed [illegible] (Owner or Owner's Designee) Supvg. ASME Codes Engineer (Title) 6/6 1991 (Date)

CERTIFICATE OF INSPECTION

I, the undersigned holding a valid commission issued by the National Board of Boiler and Pressure Vessel Inspectors and the State or Province of California, employed by Arkwright Mutual Insurance Company (Factory Mutual System) of Norwood, Massachusetts have inspected the components described in this Owner's Report during the period from 4/23/90 to 6/7/91 and state that to the best of my knowledge and belief, this repair or replacement has been performed in accordance with Section XI of the ASME Code. By signing this certificate, neither the Inspector nor his employer makes any warranty, expressed or implied, concerning the repair or replacement in this Report. Furthermore, neither the Inspector nor his employer shall be liable in any manner for any personal injury or property damage or a loss of any kind arising from or connected with this inspection.

[illegible] Commissions 1862 California
Inspector's Signature (State or Province, National Board)

Date June 7 1991

Note: Supplemental sheets in the form of lists, sketches, or drawings may be used provided (1) size is 8-1/2 in. x 11 in., (2) information in Items 1 through 4 on this data report is included on each sheet, and (3) each sheet is numbered and the number of sheets is recorded at the top of this form.

NIS-2
OWNER'S REPORT OF REPAIR OR REPLACEMENT

As Required by the Provisions of ASME Code Section XI

1. Owner: Southern California Edison Company
   2244 Walnut Grove Ave., Rosemead, CA 91770

ASME MO: 90061212

Unit: 1

2. Plant: San Onofre Nuclear Generating Station
   P.O. Box 128, San Clemente, CA 92674-0128

RS: 257-90

3. Work Performed by: Southern California Edison

P&ID: 5178105

4. System Identification: Pressurizer

5. (a) Applicable Construction Code: ASME Section VIII-1, 1962 Edition, No Addenda, Code Classified XI-1, Code Cases: 1270N to 1273N

   (b) Applicable Edition of Section XI Utilized for Repairs or Replacements: 1977 Edition, S'78 Addenda, Code Cases: None

6. Identification of Components Repaired or Replaced:

Name of Component	Name of Manufacturer	Manufacturer Serial No.	National Board No.	Other Identification	Year Built	Repaired, Replaced, or Replacement	ASME Code Stamped Yes/No
Pressurizer	Westinghouse	16A-4850-1	608	S1-PZR-C-2	1965	---	Yes
Cap Screws (4)	Westinghouse	Ht. Code "W632"	N/A	RSO 8575-84 SA-193, Gr B7	1974	Replacement	No

7. Work Description:

During removal of the upper manway cover on the Unit 1 pressurizer, four (4) bolts were found degraded and required replacement. The replacement bolting (1 3/4" D x 8 5/8" long, SA-193, Gr B7) were evaluated as meeting the original construction code requirements. A VT-1 examination was conducted on the replacement bolting with no relevant indications noted.

References: NCR 90070036, ME-90-036

8. Tests Conducted: System Leakage [X] System Functional [ ] System Inservice [ ] Hydrostatic [ ] Pneumatic [ ] Other [ ]
   Pressure: 2080 psig Temp: 545 °F

FORM NIS-2 (back)

9. **Remarks:** None

(Applicable Manufacturer's Data Reports to be attached)

CERTIFICATE OF COMPLIANCE

We certify that the statements made in this report are correct and this replacement (repair or replacement) conforms to the rules of the ASME Code, Section XI.

Signed [signature] (Owner or Owner's Designee) Supvg. ASME Codes Engineer (Title) 4/3 (Date) 19 91

CERTIFICATE OF INSPECTION

I, the undersigned holding a valid commission issued by the National Board of Boiler and Pressure Vessel Inspectors and the State or Province of California, employed by Arkwright Mutual Insurance Company (Factory Mutual System) of Norwood, Massachusetts have inspected the components described in this Owner's Report during the period from 7/3/90 to 4/4/91 and state that to the best of my knowledge and belief, this repair or replacement has been performed in accordance with Section XI of the ASME Code. By signing this certificate, neither the Inspector nor his employer makes any warranty, expressed or implied, concerning the repair or replacement in this Report. Furthermore, neither the Inspector nor his employer shall be liable in any manner for any personal injury or property damage or a loss of any kind arising from or connected with this inspection.

[signature] Commissions 1862 California
Inspector's Signature (State or Province, National Board)

Date April 4, 1991

Note: Supplemental sheets in the form of lists, sketches, or drawings may be used provided (1) size is 8-1/2 in. x 11 in., (2) information in Items 1 through 4 on this data report is included on each sheet, and (3) each sheet is numbered and the number of sheets is recorded at the top of this form.

NIS-2
OWNER'S REPORT OF REPAIR OR REPLACEMENT

As Required by the Provisions of ASME Code Section XI

1. Owner: Southern California Edison Company
   2244 Walnut Grove Ave., Rosemead, CA 91770

2. Plant: San Onofre Nuclear Generating Station
   P.O. Box 128, San Clemente, CA 92674-0128

3. Work Performed by: Southern California Edison

4. System Identification: Pressurizer

ASME MO: 89111979

Unit: 1

RS: 273-90

P&ID: 5178105

5. (a) Applicable Construction Code: Westinghouse E-Spec. 676044, Code Classified XI-1, Code Cases: None

   (b) Applicable Edition of Section XI Utilized for Repairs or Replacements: 1977 Edition, S'78 Addenda, Code Cases: None

6. Identification of Components Repaired or Replaced:

Name of Component	Name of Manufacturer	Manufacturer Serial No.	National Board No.	Other Identification	Year Built	Repaired, Replaced, or Replacement	ASME Code Stamped Yes/No
2" Globe Valve	BS&B	70-71390	N/A	S1-PZR-CV-545	N/A	Repaired	No

7. Work Description:

The gasket sealing surface of the bonnet was machined to increase the crush of the lower (seat/cage) gasket. .005" of material was removed. A PT examination was performed on the machined surface. The valve was reassembled in accordance with procedure SO1-I-6.59.

Reference: NCR 90080274

8. Tests Conducted: System Leakage [X] System Functional [ ] System Inservice [ ] Hydrostatic [ ] Pneumatic [ ] Other [X] VT-2 Examination
   Pressure: 2070 psig Temp: 530 °F

FORM NIS-2 (back)

9. **Remarks:** None

(Applicable Manufacturer's Data Reports to be attached)

CERTIFICATE OF COMPLIANCE

We certify that the statements made in this report are correct and this repair (repair or replacement) conforms to the rules of the ASME Code, Section XI.

Signed _____ (Owner or Owner's Designee) Supvg. ASME Codes Engineer (Title) 19 Apr. 1 (Date) 19 91

CERTIFICATE OF INSPECTION

I, the undersigned holding a valid commission issued by the National Board of Boiler and Pressure Vessel Inspectors and the State or Province of California, employed by Arkwright Mutual Insurance Company (Factory Mutual System) of Norwood, Massachusetts have inspected the components described in this Owner's Report during the period from 09/17/90 to 04/20/91 and state that to the best of my knowledge and belief, this repair or replacement has been performed in accordance with Section XI of the ASME Code. By signing this certificate, neither the Inspector nor his employer makes any warranty, expressed or implied, concerning the repair or replacement in this Report. Furthermore, neither the Inspector nor his employer shall be liable in any manner for any personal injury or property damage or a loss of any kind arising from or connected with this inspection.

_____ Commissions 1864 California
Inspector's Signature (State or Province, National Board)

Date April 20 19 91

Note: Supplemental sheets in the form of lists, sketches, or drawings may be used provided (1) size is 8-1/2 in. x 11 in., (2) information in Items 1 through 4 on this data report is included on each sheet, and (3) each sheet is numbered and the number of sheets is recorded at the top of this form.

NIS-2

OWNER'S REPORT OF REPAIR OR REPLACEMENT

As Required by the Provisions of ASME Code Section XI

==========

1. Owner: Southern California Edison Company
2244 Walnut Grove Ave., Rosemead, CA 91770

ASME M.O.: 89110419

Unit: 1

2. Plant: San Onofre Nuclear Generating Station
P. O. Box 128, San Clemente, CA 92672

RS: 672-89, Rev. 1

3. Work Performed by: Southern California Edison

P&ID: 5178105/grid B-3

4. System Identification: Pressurizer (PZR)

5. (a) Applicable Valve Manufacturing Code: Westinghouse Specification E-676044

(b) Applicable Edition of Section XI Utilized for Repairs or Replacements: 1977 Edition, S'79 Addenda, Code Cases: None

6. Identification of Components Repaired or Replaced:

Name of Component	Name of Mfr.	Mfr. Serial No.	Nat'l Bd. No.	Other Identi-fication	Year Built	Repaired, Replaced or Replacement	ASME Code Stamped Yes/No
Control Valve	Black, Sivalls & Bryson	70-71368	N/A	S1-PZR-PCV-430H	N/A	Repaired	No
Weld Filler Metal: ER316L SFA 5.9, 1/16" and 3/32"	Johnston Stainless	heat no S468557	N/A	RSO-5508-84	N/A	Repair Weld Metal	Yes

7. Work Description:

The packing flush outlet line from the bonnet to valve S1-PZR-027 was broken when accidently hit by scaffolding (Reference NCR #SO1-P-7392). The disposition required replacing the broken pipe nipple. During implementation of this work the packing flush inlet nipple on the opposite side of the bonnet (from valve S1-PZR-023) was cut off in error. Both lines were threaded into the bonnet but are not within the scope of ASME Section XI. Due to thread damage in the ports the threads were drilled out on both connections to a depth of 3/8" to allow socket welding the replacement sections of ¼" NPS piping to the bonnet. The welding was completed as documented on weld record number WR1-89-880.

8. Tests Conducted: System Leakage [X] System Functional [ ] System Inservice [ ] Hydrostatic [ ] Pneumatic [ ] Test Pressure: 2090 psig, Test Temp.: 545°F

FORM NIS-2 (back)

9. Remarks: None

(Applicable Manufacturer's Data Reports to be attached)

CERTIFICATE OF COMPLIANCE

We certify that the statements made in this report are correct and this REPAIR conforms to the rules of the ASME Code, Section XI.
(repair or replacement)

Signed [illegible] (Supvg. ASME Codes Engineer) 11/29 19 90
(Owner or Owner's Designee) Title (Date)

CERTIFICATE OF INSPECTION

I, the undersigned holding a valid commission issued by the National Board of Boiler and Pressure Vessel Inspectors and the State or Province of California, employed by Arkwright Mutual Insurance Company (Factory Mutual System) of Norwood, Massachusetts have inspected the components described in this Owner's Report during the period from 11/9/89 to 4/25/90 and state that to the best of my knowledge and belief, this repair or replacement has been performed in accordance with Section XI of the ASME Code. By signing this certificate, neither the Inspector nor his employer makes any warranty, expressed or implied, concerning the repair or replacement in this Report. Furthermore, neither the Inspector nor his employer shall be liable in any manner for any personal injury or property damage or a loss of any kind arising from or connected with this inspection.

[illegible] Commissions California 1574
Inspector's Signature (State or Province, National Board)

Date Dec. 13 19 90

Note: Supplemental sheets in the form of lists, sketches, or drawings may be used provided (1) size is 8-1/2 in. x 11 in., (2) information in Items 1 through 4 on this data report is included on each sheet, and (3) each sheet is numbered and the number of sheets is recorded at the top of this form.

NIS-2

OWNER'S REPORT OF REPAIR OR REPLACEMENT

As Required by the Provisions of ASME Code Section XI

1. Owner: Southern California Edison Company
2244 Walnut Grove Ave., Rosemead, CA 91770

Traveler: ASME MO

Unit: 1

2. Plant: San Onofre Nuclear Generating Station
P.O. Box 128, San Clemente, CA 92672

MERS: 278-89

3. Work Performed by: Southern California Edison

M.O.: 89052422

4. System Identification: Pressurizer (RCS)

P&ID: 5178105 (E-5)

5. (a) Applicable Construction Code: Westinghouse E-Spec 675197 ASME I, 1962 Ed., W'63 Add. Code Cases: N/A
(b) Applicable Edition of Section XI Utilized for Repairs or Replacements: 1977 Edition, S'78 Addenda, Code Cases: N/A

6. Identification of Components Repaired or Replaced:

Name of Component	Name of Manufacturer	Manufacturer Serial No.	National Board No.	Other Identification	Year Built	Repaired, Replaced, or Replacement	ASME Code Stamped Yes/No
3 K26 Relief Valve	Crosby	47469-M-1	N/A	S1-PZR-RV-532	-----	Replaced	Yes
3 K26 Relief Valve	Crosby	N5118S-02-0001	N/A	RSO-1701-89	1980	Replacement	Yes

7. Work Description:
1. Verified that the replacement valve meets the original design/construction code. Verified the replacement valve was one of the valves listed on MERs 230-89 or 231-89 and it was refurbished at Westinghouse.
2. Removed existing valve.
3. Performed VT-1 of existing bolting.
4. Installed replacement valve.
5. Performed a System Leakage Pressure Test with VT-2 Examination.

8. Tests Conducted: System Leakage [x] System Functional [ ] System Inservice [ ]
Hydrostatic [ ] Pneumatic [ ] Other [ ]
Pressure: 2090 psig Temp: 540°F

FORM NIS-2 (back)

9. Remarks: None

(Applicable Manufacturer's Data Reports to be attached)

CERTIFICATE OF COMPLIANCE

We certify that the statements made in this report are correct and this Replacement (repair or replacement) conforms to the rules of the ASME Code, Section XI.

Signed [signature] (Supvg. ASME Codes Engineer) 7/5 1989
(Owner or Owner's Designee) Title (Date)

CERTIFICATE OF INSPECTION

I, the undersigned holding a valid commission issued by the National Board of Boiler and Pressure Vessel Inspectors and the State or Province of California, employed by Arkwright Mutual Insurance Company (Factory Mutual System) of Norwood, Massachusetts have inspected the components described in this Owner's Report during the period from 5/29/89 to 7/5/89 and state that to the best of my knowledge and belief, this repair or replacement has been performed in accordance with Section XI of the ASME Code. By signing this certificate, neither the Inspector nor his employer makes any warranty, expressed or implied, concerning the repair or replacement in this Report. Furthermore, neither the Inspector nor his employer shall be liable in any manner for any personal injury or property damage or a loss of any kind arising from or connected with this inspection.

[signature] Commissions 1272 California
Inspector's Signature (State or Province, National Board)

Date 7/5 1989

Note: Supplemental sheets in the form of lists, sketches, or drawings may be used provided (1) size is 8-1/2 in. x 11 in., (2) information in Items 1 through 4 on this data report is included on each sheet, and (3) each sheet is numbered and the number of sheets is recorded at the top of this form.

NIS-2

OWNER'S REPORT OF REPAIR OR REPLACEMENT

As Required by the Provisions of ASME Code Section XI

1. Owner: Southern California Edison Company
2244 Walnut Grove Ave., Rosemead, CA 91770

ASME MO: 89100177

Unit: 1

2. Plant: San Onofre Nuclear Generating Station
P.O. Box 128, San Clemente, CA 92674-0128

RS: 242-90

3. Work Performed by: Southern California Edison

P&ID: 5178105

4. System Identification: Pressurizer Reactor Coolant

5. (a) Applicable Construction Code: ASME Section I, 1962 Edition, No Addenda, Code Classified XI-1, Code Cases: None

(b) Applicable Edition of Section XI Utilized for Repairs or Replacements: 1977 Edition, S'78 Addenda, Code Cases: None

6. Identification of Components Repaired or Replaced:

Name of Component	Name of Manufacturer	Manufacturer Serial No.	National Board No.	Other Identification	Year Built	Repaired, Replaced, or Replacement	ASME Code Stamped Yes/No
6" Safety Valve	Crosby	N51185-02-0001	N/A	S1-PZR-RV-532	N/A	Replaced	Yes
6" Safety Valve	Crosby	N47469-M2	N/A	RSO 2232-90	1962	Replacement	Yes

7. Work Description:

Safety valve (S/N N51185-02-0001) installed in plant postion S1-PZR-RV-532 was replaced with a tested spare valve. The replacement safety valve was verified to be in compliance with the original construction code and installed. A VT-2 examination was conducted in conjunction with a system leakage pressure test with satisfactory results.

Note: The serial numbers were changed from 47469-M1 to N47469-M2 by R.V. Manufacturing.

Reference: NCR 90070339

8. Tests Conducted: System Leakage [X] System Functional [ ] System Inservice [ ] Hydrostatic [ ] Pneumatic [ ] Other [ ]
Pressure: 2085 psig Temp: 535 °F

FORM NIS-2 (back)

9. **Remarks:** None

(Applicable Manufacturer's Data Reports to be attached)

CERTIFICATE OF COMPLIANCE

We certify that the statements made in this report are correct and this replacement (repair or replacement) conforms to the rules of the ASME Code, Section XI:

Signed [signature] (Owner or Owner's Designee) Supvg. ASME Codes Engineer (Title) 4/22 (Date) 1991

CERTIFICATE OF INSPECTION

I, the undersigned holding a valid commission issued by the National Board of Boiler and Pressure Vessel Inspectors and the State or Province of California, employed by Arkwright Mutual Insurance Company (Factory Mutual System) of Norwood, Massachusetts have inspected the components described in this Owner's Report during the period from 09/07/90 to 04/20/91 and state that to the best of my knowledge and belief, this repair or replacement has been performed in accordance with Section XI of the ASME Code. By signing this certificate, neither the Inspector nor his employer makes any warranty, expressed or implied, concerning the repair or replacement in this Report. Furthermore, neither the Inspector nor his employer shall be liable in any manner for any personal injury or property damage or a loss of any kind arising from or connected with this inspection.

[signature] Commissions 1574 California
Inspector's Signature (State or Province, National Board)

Date 4/22/ 19 91

Note: Supplemental sheets in the form of lists, sketches, or drawings may be used provided (1) size is 8-1/2 in. x 11 in., (2) information in Items 1 through 4 on this data report is included on each sheet, and (3) each sheet is numbered and the number of sheets is recorded at the top of this form.

NIS-2
OWNER'S REPORT OF REPAIR OR REPLACEMENT

As Required by the Provisions of ASME Code Section XI

1. Owner: Southern California Edison Company
2244 Walnut Grove Ave., Rosemead, CA 91770

Traveler: SO1-90-018

Unit: 1

2. Plant: San Onofre Nuclear Generating Station
P.O. Box 128, San Clemente, CA 92674-0128

RS: 224-90

3. Work Performed by: Crosby Valve & Gage

MO: 89122251

4. System Identification: Reactor Coolant System

P&ID: 5178105

5. (a) Applicable Construction Code: Westinghouse Equipment Specification 675197, Code Classified XI-1, Code Cases: None

(b) Applicable Edition of Section XI Utilized for Repairs or Replacements: 1977 Edition, S'78 Addenda, Code Cases: None

6. Identification of Components Repaired or Replaced:

Name of Component	Name of Manufacturer	Manufacturer Serial No.	National Board No.	Other Identification	Year Built	Repaired, Replaced, or Replacement	ASME Code Stamped Yes/No
3" X 6" Pressurizer Safety Valve	Crosby Valve & Gage	47469-532	N/A	024-18820 (47469-M1-532)	---	---	Yes (NV)
Nozzle	Crosby Valve & Gage	N95583-31-0002	N/A	RSO 1208-90 ME-90-037 SA-182, F316 Part# N95583-31	---	Replacement	No
Disc	Crosby Valve & Gage	N95584-31-0005	N/A	RSO 1208-90 ME-90-038 SA-638 Alloy N07718 Part# N95584-31	---	Replacement	No

7. Work Description:

The safety valve was sent offsite (Westinghouse, Beaumont Facility) for overhaul. Overhaul work and replacement parts were documented on Traveler SO1-90-018. Replacement parts were verified as meeting Westinghouse Spec 675197 (ref. Code Reconciliations listed above). Valve disassembly and testing were performed per SCE Mini-Specs SO1-408-1 and SO1-408-2.

8. Tests Conducted: System Leakage [ ] System Functional [ ] System Inservice [ ] Hydrostatic [ ] Pneumatic [ ] Other [X] N/A
Pressure: N/A psig Temp: N/A

FORM NIS-2 (back)

9. **Remarks:** A system pressure test was performed after installation.

(Applicable Manufacturer's Data Reports to be attached)

CERTIFICATE OF COMPLIANCE

We certify that the statements made in this report are correct and this repair (repair or replacement) conforms to the rules of the ASME Code, Section XI.

Signed [illegible] (Owner or Owner's Designee) Supvg. ASME Codes Engineer (Title) 6/8 (Date) 19 91

CERTIFICATE OF INSPECTION

I, the undersigned holding a valid commission issued by the National Board of Boiler and Pressure Vessel Inspectors and the State or Province of California, employed by Arkwright Mutual Insurance Company (Factory Mutual System) of Norwood, Massachusetts have inspected the components described in this Owner's Report during the period from 7/2/90 to 6/8/91 and state that to the best of my knowledge and belief, this repair or replacement has been performed in accordance with Section XI of the ASME Code. By signing this certificate, neither the Inspector nor his employer makes any warranty, expressed or implied, concerning the repair or replacement in this Report. Furthermore, neither the Inspector nor his employer shall be liable in any manner for any personal injury or property damage or a loss of any kind arising from or connected with this inspection.

[illegible] Commissions 1862 California
Inspector's Signature (State or Province, National Board)

Date June 8, 1991

Note: Supplemental sheets in the form of lists, sketches, or drawings may be used provided (1) size is 8-1/2 in. x 11 in., (2) information in Items 1 through 4 on this data report is included on each sheet, and (3) each sheet is numbered and the number of sheets is recorded at the top of this form.

NIS-2
OWNER'S REPORT OF REPAIR OR REPLACEMENT

As Required by the Provisions of ASME Code Section XI

Traveler: SO1-90-028

Unit: 1

RS: 301-90

MO: 90081434

P&ID: N/A

1. Owner: Southern California Edison Company
   2244 Walnut Grove Ave., Rosemead, CA 91770

2. Plant: San Onofre Nuclear Generating Station
   P.O. Box 128, San Clemente, CA 92674-0128

3. Work Performed by: Southern California Edison

4. System Identification: Pressurizer (Spare)

5. (a) Applicable Construction Code: ASME Section III, 1968 Edition, S'68 Addenda, Code Cases: None; Reference SCE Spec. SOBS-2, Rev. 1

   (b) Applicable Edition of Section XI Utilized for Repairs or Replacements: 1977 Edition, S'78 Addenda, Code Cases: None; Component is Code Classified XI-1

6. Identification of Components Repaired or Replaced:

Name of Component	Name of Manufacturer	Manufacturer Serial No.	National Board No.	Other Identification	Year Built	Repaired, Replaced, or Replacement	ASME Code Stamped Yes/No
3" x 6" Pressurizer Safety Valve	Crosby Valve & Gage	N51185-02-0001	N/A	S1-PZR-RV-532	1980	---	Yes
Nozzle	Crosby Valve & Gage	N95585-31-0002	N/A	RSO 1640-90 SA182, F316	---	Replacement	No
Disc	Crosby Valve & Gage	N95584-32-0008	N/A	RSO 1994-90 SB637, N00718	---	Replacement	No

7. Work Description:

The nozzle and disc were replaced with modified design replacements in accordance with FCN S5061M. The replacement parts were reconciled with the original construction code and installed during the overhaul of the valve at a Westinghouse offsite facility. The reassembly and testing were performed in accordance with SO1-408-8 and SO1-408-2. A Receiving Inspection was performed on the valve upon its return to the site and documented on RSO 2701-90.

References: ME-90-057 (nozzle), ME-90-058 (disc)

8. Tests Conducted: System Leakage [ ] System Functional [ ] System Inservice [ ] Hydrostatic [ ] Pneumatic [ ] Other [X] N/A

FORM NIS-2 (back)

9. **Remarks:** This is a spare valve. A system pressure test will be conducted when the relief valve will be installed.

(Applicable Manufacturer's Data Reports to be attached)

CERTIFICATE OF COMPLIANCE

We certify that the statements made in this report are correct and this replacement (repair or replacement) conforms to the rules of the ASME Code, Section XI.

Signed [signature] (Owner or Owner's Designee) Supvg. ASME Codes Engineer (Title) 23 April (Date) 1991

CERTIFICATE OF INSPECTION

I, the undersigned holding a valid commission issued by the National Board of Boiler and Pressure Vessel Inspectors and the State or Province of California, employed by Arkwright Mutual Insurance Company (Factory Mutual System) of Norwood, Massachusetts have inspected the components described in this Owner's Report during the period from 9/11/90 to 4/28/91 and state that to the best of my knowledge and belief, this repair or replacement has been performed in accordance with Section XI of the ASME Code. By signing this certificate, neither the Inspector nor his employer makes any warranty, expressed or implied, concerning the repair or replacement in this Report. Furthermore, neither the Inspector nor his employer shall be liable in any manner for any personal injury or property damage or a loss of any kind arising from or connected with this inspection.

[signature] Commissions 1862 California
Inspector's Signature (State or Province, National Board)

Date April 28, 1991

Note: Supplemental sheets in the form of lists, sketches, or drawings may be used provided (1) size is 8-1/2 in. x 11 in., (2) information in Items 1 through 4 on this data report is included on each sheet, and (3) each sheet is numbered and the number of sheets is recorded at the top of this form.

NIS-2

OWNER'S REPORT OF REPAIR OR REPLACEMENT

As Required by the Provisions of ASME Code Section XI

1. Owner: Southern California Edison Company
2244 Walnut Grove Ave., Rosemead, CA 91770

ASME M.O.: 89052421
89053288

Unit: 1

2. Plant: San Onofre Nuclear Generating Station
P. O. Box 128, San Clemente, CA 92672

MERS: 279-89, 294-89

3. Work Performed by: Southern California Edison

P&ID.: 5178105

4. System Identification: Pressurizer (PZR)

5. (a) Applicable Construction Code: ASME Section I, 1962 Edition, W'63 addenda and Westinghouse Equipment Specification E-675197 revision 1,
Code Cases: Special Ruling 1271 N

(b) Applicable Edition of Section XI Utilized for Repairs or Replacements:
1977 Edition, S'78 Addenda, Code Cases: None

6. Identification of Components Repaired or Replaced:

Name of Component	Name of Mfr.	Mfr. Serial No.	Nat'l Bd. No.	Other Identi-fication	Year Built	Repaired, Replaced or Replacement	ASME Code Stamped Yes/No
Safety Relief Valve size 3K26	Crosby Valve & Gage Co.	N51185-02-0002	N/A	S1-PZR-RV-533	1980	Replaced	Yes
		47469-M-1-533	N/A	RSO 1702-89 SOG-89-002	1964 (est.)	Replacement	Yes
Studs: SA-193 gr B7	Nova Machine Products	ht trace MW6	N/A	RSO 1777-89 studs & nuts	N/A	Replacement	No
Nuts: SA-194 gr 2H		ht trace QL60					

7. Work Description:

Pressurizer Safety Relief Valve serial number N51185-02-0002 experienced seat leakage and was scheduled for replacement with a rebuilt spare. During removal some of the inlet flange bolting was determined to be in need of replacement. A replacement valve refurbished as documented in ASME Section XI Traveler SOG-89-002 was obtained and installed in plant location S1-PZR-RV-533. Replacement bolting reconciled to the original construction code as per ASME Section XI, IWA-7210 (c) was obtained and VT-1 examined. The VT-1 examination results were satisfactory and the bolting was installed.

8. Tests Conducted: System Leakage [X] System Functional [ ] System Inservice [ ]
Hydrostatic [ ] Pneumatic [ ] Test Pressure: 2090 psig, Test Temp.: 540 °F

FORM NIS-2 (back)

9. Remarks: M.O. 89052421 documents the material verification, installation and VT-2 pressure testing of the installed valve. M.O. 89053288 documents the material verification and installation of the replacement inlet flange studs and nuts.

(Applicable Manufacturer's Data Reports to be attached)

CERTIFICATE OF COMPLIANCE

We certify that the statements made in this report are correct and this replacement (repair or replacement) conforms to the rules of the ASME Code, Section XI.

Signed [signature] (Supvg. ASME Codes Engineer) 7/7 1989
(Owner or Owner's Designee) Title (Date)

CERTIFICATE OF INSPECTION

I, the undersigned holding a valid commission issued by the National Board of Boiler and Pressure Vessel Inspectors and the State or Province of California, employed by Arkwright Mutual Insurance Company (Factory Mutual System) of Norwood, Massachusetts have inspected the components described in this Owner's Report during the period from 5/29/89 to 7/6/89 and state that to the best of my knowledge and belief, this repair or replacement has been performed in accordance with Section XI of the ASME Code. By signing this certificate, neither the Inspector nor his employer makes any warranty, expressed or implied, concerning the repair or replacement in this Report. Furthermore, neither the Inspector nor his employer shall be liable in any manner for any personal injury or property damage or a loss of any kind arising from or connected with this inspection.

[signature] Commissions 1272 California
Inspector's Signature (State or Province, National Board)

Date 7/7 19 89

Note: Supplemental sheets in the form of lists, sketches, or drawings may be used provided (1) size is 8-1/2 in. x 11 in., (2) information in Items 1 through 4 on this data report is included on each sheet, and (3) each sheet is numbered and the number of sheets is recorded at the top of this form.

NIS-2
OWNER'S REPORT OF REPAIR OR REPLACEMENT

As Required by the Provisions of ASME Code Section XI

Sheet 1 of 1

1. Owner: Southern California Edison Company
2244 Walnut Grove Ave., Rosemead, CA 91770

ASME MO: 89100178

Unit: 1

2. Plant: San Onofre Nuclear Generating Station
P.O. Box 128, San Clemente, CA 92674-0128

RS: 243-90

3. Work Performed by: Southern California Edison

P&ID: 5178105

4. System Identification: Pressurizer

5. (a) Applicable Construction Code: ASME Section I, 1962 Edition, Code Classified XI-1, Code Cases: None

(b) Applicable Edition of Section XI Utilized for Repairs or Replacements: 1977 Edition, S'78 Addenda, Code Cases: None

6. Identification of Components Repaired or Replaced:

Name of Component	Name of Manufacturer	Manufacturer Serial No.	National Board No.	Other Identification	Year Built	Repaired, Replaced, or Replacement	ASME Code Stamped Yes/No
Safety Valve	Crosby	47469-M1-533	N/A	S1-PZR-RV-533	N/A	Replaced	N/A
Safety Valve	Crosby	N51185-02-0002	N/A	RSO 2232-90	1968	Replacement	Yes

7. Work Description:

Safety valve (S/N 47469-M1-533) installed in plant position S1-PZR-RV-533 is to be replaced with a tested spare. Replacement safety valve was verified to be in compliance with the original construction code and installed. A VT-2 examination in conjunction with a system leakage pressure test was performed with satisfactory results.

Reference: NCR 90060011

8. Tests Conducted: System Leakage [X] System Functional [ ] System Inservice [ ] Hydrostatic [ ] Pneumatic [ ] Other [ ]
Pressure: 2085 psig Temp: 535 °F

FORM NIS-2 (back)

9. **Remarks:** None

(Applicable Manufacturer's Data Reports to be attached)

CERTIFICATE OF COMPLIANCE

We certify that the statements made in this report are correct and this replacement (repair or replacement) conforms to the rules of the ASME Code, Section XI.

Signed [signature] (Owner or Owner's Designee) Supvg. ASME Codes Engineer (Title) 4/3 (Date) 1991

CERTIFICATE OF INSPECTION

I, the undersigned holding a valid commission issued by the National Board of Boiler and Pressure Vessel Inspectors and the State or Province of California, employed by Arkwright Mutual Insurance Company (Factory Mutual System) of Norwood, Massachusetts have inspected the components described in this Owner's Report during the period from 9/7/90 to 3/21/91 and state that to the best of my knowledge and belief, this repair or replacement has been performed in accordance with Section XI of the ASME Code. By signing this certificate, neither the Inspector nor his employer makes any warranty, expressed or implied, concerning the repair or replacement in this Report. Furthermore, neither the Inspector nor his employer shall be liable in any manner for any personal injury or property damage or a loss of any kind arising from or connected with this inspection.

Inspector's Signature [signature] Commissions 1574 California (State or Province, National Board)

Date April 4 1991

Note: Supplemental sheets in the form of lists, sketches, or drawings may be used provided (1) size is 8-1/2 in. x 11 in., (2) information in Items 1 through 4 on this data report is included on each sheet, and (3) each sheet is numbered and the number of sheets is recorded at the top of this form.

NIS-2
OWNER'S REPORT OF REPAIR OR REPLACEMENT

As Required by the Provisions of ASME Code Section XI

Sheet 1 of 1

1. Owner: Southern California Edison Company
2244 Walnut Grove Ave., Rosemead, CA 91770

Traveler: SO1-90-027

Unit: 1

2. Plant: San Onofre Nuclear Generating Station
P.O. Box 128, San Clemente, CA 92674-0128

RS: 300-90

3. Work Performed by: Crosby Valve & Gage Company

MO: 90081435

4. System Identification: Reactor Coolant

P&ID: N/A

5. (a) Applicable Construction Code: Westinghouse Equipment Specification 675197, Code Classified XI-1, Code Cases: None

(b) Applicable Edition of Section XI Utilized for Repairs or Replacements: 1977 Edition, S'78 Addenda, Code Cases: None

6. Identification of Components Repaired or Replaced:

Name of Component	Name of Manufacturer	Manufacturer Serial No.	National Board No.	Other Identification	Year Built	Repaired, Replaced, or Replacement	ASME Code Stamped Yes/No
3" x 6" Safety Valve	Crosby	47469-533*	N/A	S1-PZR-RV-533 RSO 2701-90	1980	---	Yes
Nozzle	Crosby	N95583-31-0001	N/A	RSO 1208-90 SA-182, F316	N/A	Replacement	No
Disc Insert	Crosby	N95584-31-0004	N/A	RSO 1208-90 SB-637-NO7718	N/A	Replacement	No

7. Work Description:

In conjunction with the overhaul of the safety valve, a new design nozzle and disc insert were replaced in accordance with the referenced FCN. The replacement nozzle and disc were verified to be in compliance with the original construction code as reconciled by SCE material evaluations ME-90-059 and ME-90-060.

Reference: FCN S5062M

8. Tests Conducted: System Leakage [ ] System Functional [ ] System Inservice [ ] Hydrostatic [ ] Pneumatic [ ] Other [X] Pressure test to be performed on installation MO.
Pressure: N/A psig Temp: N/A

*This is the original serial number of this relief valve. Crosby adds a "M" designation number to the serial number when modification have performed by Crosby. For tracking purpose this "M" designation has not been noted.

FORM NIS-2 (back)

9. **Remarks:** None

(Applicable Manufacturer's Data Reports to be attached)

CERTIFICATE OF COMPLIANCE

We certify that the statements made in this report are correct and this replacement (repair or replacement) conforms to the rules of the ASME Code, Section XI.

Signed [signature] (Owner or Owner's Designee) Supvg. ASME Codes Engineer (Title) 6/3 (Date) 19 91

CERTIFICATE OF INSPECTION

I, the undersigned holding a valid commission issued by the National Board of Boiler and Pressure Vessel Inspectors and the State or Province of California, employed by Arkwright Mutual Insurance Company (Factory Mutual System) of Norwood, Massachusetts have inspected the components described in this Owner's Report during the period from 9/11/90 to 6/8/91 and state that to the best of my knowledge and belief, this repair or replacement has been performed in accordance with Section XI of the ASME Code. By signing this certificate, neither the Inspector nor his employer makes any warranty, expressed or implied, concerning the repair or replacement in this Report. Furthermore, neither the Inspector nor his employer shall be liable in any manner for any personal injury or property damage or a loss of any kind arising from or connected with this inspection.

[signature] Commissions 1862 California
Inspector's Signature (State or Province, National Board)

Date June 8 19 91

Note: Supplemental sheets in the form of lists, sketches, or drawings may be used provided (1) size is 8-1/2 in. x 11 in., (2) information in Items 1 through 4 on this data report is included on each sheet, and (3) each sheet is numbered and the number of sheets is recorded at the top of this form.

NIS-2
OWNER'S REPORT OF REPAIR OR REPLACEMENT

As Required by the Provisions of ASME Code Section XI

Sheet 1 of 1

1. Owner: Southern California Edison Company
2244 Walnut Grove Ave., Rosemead, CA 91770

Traveler: SO1-90-019

Unit: 1

2. Plant: San Onofre Nuclear Generating Station
P.O. Box 128, San Clemente, CA 92674-0128

RS: 225-90

3. Work Performed by: Southern California Edison

MO: 89122256

4. System Identification: Pressurizer (Spare)

P&ID: N/A

5. (a) Applicable Construction Code: ASME Section III, 1968 Edition, S'68 Addenda, Code Cases: None; Reference SCE Spec. SOBS-2, Rev. 1

(b) Applicable Edition of Section XI Utilized for Repairs or Replacements: 1977 Edition, S'78 Addenda, Code Cases: None; Component is Code Classified XI-1

6. Identification of Components Repaired or Replaced:

Name of Component	Name of Manufacturer	Manufacturer Serial No.	National Board No.	Other Identification	Year Built	Repaired, Replaced, or Replacement	ASME Code Stamped Yes/No
3" x 6" Pressurizer Safety Valve	Crosby Valve & Gage	N51185-02-0002	N/A	S1-PZR-RV-533	1980	---	Yes
Nozzle	Crosby Valve & Gage	N95585-31-0001	N/A	RSO 1640-90 SA182, F316	---	Replacement	No
Disc	Crosby Valve & Gage	N95584-32-0006	N/A	RSO 1994-90 S2637, N00718	---	Replacement	No

7. Work Description:

The nozzle and disc were replaced with modified design replacements in accordance with FCN S5061M. The replacement parts were reconciled with the original construction code and installed during the overhaul of the valve at a Westinghouse offsite facility. The reassembly and testing were performed in accordance with SO1-408-8 and SO1-408-2. A Receiving Inspection was performed on the valve upon its return to the site and documented on RSO 2701-90.

References: ME-90-039 (nozzle), ME-90-040 (disc)

8. Tests Conducted: System Leakage [ ] System Functional [ ] System Inservice [ ] Hydrostatic [ ] Pneumatic [ ] Other [X] N/A

FORM NIS-2 (back)

9. Remarks: This is a spare valve. A system pressure test will be conducted when the relief valve will be installed.

(Applicable Manufacturer's Data Reports to be attached)

CERTIFICATE OF COMPLIANCE

We certify that the statements made in this report are correct and this replacement (repair or replacement) conforms to the rules of the ASME Code, Section XI.

Signed [signature] (Owner or Owner's Designee) Supvg. ASME Codes Engineer (Title) 23 April 1991 (Date)

CERTIFICATE OF INSPECTION

I, the undersigned holding a valid commission issued by the National Board of Boiler and Pressure Vessel Inspectors and the State or Province of California, employed by Arkwright Mutual Insurance Company (Factory Mutual System) of Norwood, Massachusetts have inspected the components described in this Owner's Report during the period from 7/2/90 to 4/20/91 and state that to the best of my knowledge and belief, this repair or replacement has been performed in accordance with Section XI of the ASME Code. By signing this certificate, neither the Inspector nor his employer makes any warranty, expressed or implied, concerning the repair or replacement in this Report. Furthermore, neither the Inspector nor his employer shall be liable in any manner for any personal injury or property damage or a loss of any kind arising from or connected with this inspection.

Edward D. Easton Commissions 1574 California
Inspector's Signature (State or Province, National Board)

Date May 23 1991

Note: Supplemental sheets in the form of lists, sketches, or drawings may be used provided (1) size is 8-1/2 in. x 11 in., (2) information in Items 1 through 4 on this data report is included on each sheet, and (3) each sheet is numbered and the number of sheets is recorded at the top of this form.

NIS-2
OWNER'S REPORT OF REPAIR OR REPLACEMENT

As Required by the Provisions of ASME Code Section XI

1. **Owner:** Southern California Edison Company
   2244 Walnut Grove Ave., Rosemead, CA 91770

   ASME MO: 90071543 000

   Unit: 1

2. **Plant:** San Onofre Nuclear Generating Station
   P.O. Box 128, San Clemente, CA 92674-0128

   RS: 262-90

3. **Work Performed by:** Southern California Edison

   P&ID: 5178111/F9

4. **System Identification:** Reactor Coolant Pump Seal Water System

5. (a) **Applicable Construction Code:** ASA B31.1, 1955 edition (Code Classified XI-1)

   (b) **Applicable Edition of Section XI Utilized for Repairs or Replacements:** 1977 Edition, S'78 Addenda, Code Cases: None

6. **Identification of Components Repaired or Replaced:**

Name of Component	Name of Manufacturer	Manufacturer Serial No.	National Board No.	Other Identification	Year Built	Repaired, Replaced, or Replacement	ASME Code Stamped Yes/No
Piping	Bechtel	N/A	N/A	S1-RCP-2020-2"-BH2	1966	-------	No

7. **Work Description:**

   Line S1-RCP-2020-BH2 was cut at an existing socketweld joint to facilitate removal of the reactor coolant pump. The socketweld joint was rewelded per WR1-90-515 after reinstallation of the pump. A PT exam was performed on the weld prep area and on the final weld. No pipe or fittings were replaced.

8. **Tests Conducted:** System Leakage [ ] System Functional [ ] System Inservice [ ] Hydrostatic [X] Pneumatic [ ] Other [X] VT-2 exam was performed
   Pressure: 3600 psig Temp: ambient °F

FORM NIS-2 (back)

9. Remarks: None

(Applicable Manufacturer's Data Reports to be attached)

CERTIFICATE OF COMPLIANCE

We certify that the statements made in this report are correct and this REPAIR (repair or replacement) conforms to the rules of the ASME Code, Section XI.

Signed [illegible] (Owner or Owner's Designee) Supvg. ASME Codes Engineer (Title) 1-24 (Date) 1991

CERTIFICATE OF INSPECTION

I, the undersigned holding a valid commission issued by the National Board of Boiler and Pressure Vessel Inspectors and the State or Province of California, employed by Arkwright Mutual Insurance Company (Factory Mutual System) of Norwood, Massachusetts have inspected the components described in this Owner's Report during the period from 1/21/91 to 1/27/91 and state that to the best of my knowledge and belief, this repair or replacement has been performed in accordance with Section XI of the ASME Code. By signing this certificate, neither the Inspector nor his employer makes any warranty, expressed or implied, concerning the repair or replacement in this Report. Furthermore, neither the Inspector nor his employer shall be liable in any manner for any personal injury or property damage or a loss of any kind arising from or connected with this inspection.

[illegible] Inspector's Signature Commissions 1862 California (State or Province, National Board)

Date January 27, 1991

Note: Supplemental sheets in the form of lists, sketches, or drawings may be used provided (1) size is 8-1/2 in. x 11 in., (2) information in Items 1 through 4 on this data report is included on each sheet, and (3) each sheet is numbered and the number of sheets is recorded at the top of this form.

NIS-2
OWNER'S REPORT OF REPAIR OR REPLACEMENT

As Required by the Provisions of ASME Code Section XI

Sheet 1 of 1

1. Owner: Southern California Edison Company
2244 Walnut Grove Ave., Rosemead, CA 91770

ASME MO: 90092221

Unit: 1

2. Plant: San Onofre Nuclear Generating Station
P.O. Box 128, San Clemente, CA 92674-0128

RS: 332-90

3. Work Performed by: Southern California Edison

P&ID: 5178111 (F-9)

4. System Identification: Reactor Coolant

5. (a) Applicable Construction Code: ASA B31.1 1955 Edition, Code Cases: None

(b) Applicable Edition of Section XI Utilized for Repairs or Replacements: 1977 Edition, S'78 Addenda, Code Cases: None

6. Identification of Components Repaired or Replaced:

Name of Component	Name of Manufacturer	Manufacturer Serial No.	National Board No.	Other Identification	Year Built	Repaired, Replaced, or Replacement	ASME Code Stamped Yes/No
2" Pipe	N/A	N/A	N/A	S1-RCP-2020	N/A	Repaired	N/A

7. Work Description:

Several indentations in an area 1 1/2" x 1 3/4" x .024 deep were identified. NCR 90090172 was generated to address the condition. The indentations were removed by a hand file, the file marks were removed by polishing. An NDE PT Examination (1PT-072-90) was conducted with no relevant indications noted.

Reference: NCR 90090172

8. Tests Conducted: System Leakage [ ] System Functional [ ] System Inservice [ ] Hydrostatic [ ] Pneumatic [ ] Other [ ]
Pressure: [psig Temp: [°F

FORM NIS-2 (back)

9. Remarks: None

(Applicable Manufacturer's Data Reports to be attached)

CERTIFICATE OF COMPLIANCE

We certify that the statements made in this report are correct and this repair (repair or replacement) conforms to the rules of the ASME Code, Section XI.

Signed [signature] (Owner or Owner's Designee) Supvg. ASME Codes Engineer (Title) 21 DEC (Date) 1990

CERTIFICATE OF INSPECTION

I, the undersigned holding a valid commission issued by the National Board of Boiler and Pressure Vessel Inspectors and the State or Province of California, employed by Arkwright Mutual Insurance Company (Factory Mutual System) of Norwood, Massachusetts have inspected the components described in this Owner's Report during the period from 9/30/90 to 1/2/91 and state that to the best of my knowledge and belief, this repair or replacement has been performed in accordance with Section XI of the ASME Code. By signing this certificate, neither the Inspector nor his employer makes any warranty, expressed or implied, concerning the repair or replacement in this Report. Furthermore, neither the Inspector nor his employer shall be liable in any manner for any personal injury or property damage or a loss of any kind arising from or connected with this inspection.

[signature] Commissions 1862 California
Inspector's Signature (State or Province, National Board)

Date January 2, 1991

Note: Supplemental sheets in the form of lists, sketches, or drawings may be used provided (1) size is 8-1/2 in. x 11 in., (2) information in Items 1 through 4 on this data report is included on each sheet, and (3) each sheet is numbered and the number of sheets is recorded at the top of this form.

NIS-2
OWNER'S REPORT OF REPAIR OR REPLACEMENT

As Required by the Provisions of ASME Code Section XI

Sheet 1 of 1

1. Owner: Southern California Edison Company
2244 Walnut Grove Ave., Rosemead, CA 91770

ASME MO: 90101857

Unit: 1

2. Plant: San Onofre Nuclear Generating Station
P.O. Box 128, San Clemente, CA 92674-0128

RS: 342-90

3. Work Performed by: Southern California Edison

P&ID: 5178110 (D-2)

4. System Identification: Reactor Coolant

5. (a) Applicable Construction Code: ASA B31.1 - 1955/E-Spec. 675268, Code Classified XI-2, Code Cases: None

(b) Applicable Edition of Section XI Utilized for Repairs or Replacements: 1977 Edition, S'78 Addenda, Code Cases: None

6. Identification of Components Repaired or Replaced:

Name of Component	Name of Manufacturer	Manufacturer Serial No.	National Board No.	Other Identification	Year Built	Repaired, Replaced, or Replacement	ASME Code Stamped Yes/No
3/4" 1500# Globe Valve	Rockwell Edwards	N/A	N/A	S1-RCP-303	N/A	Replaced	No
3/4" Globe Valve	Rockwell International	BL268	N/A	RIP-P-341-82	N/A	Replacement	No

7. Work Description:

The existing valve required replacement. The replacement was reconciled to verify compliance with the original construction code requirements. A NDE/PT was conducted on the valve weld end preparation to welding. The valve was installed by welding. A VT-2 examination was performed during a System Inservice pressure test.

Reference: WR1-90-723, 1PT-83-90, CR-88-008

8. Tests Conducted: System Leakage [ ] System Functional [X] System Inservice [ ] Hydrostatic [ ] Pneumatic [ ] Other [ ]
Pressure: 2440 psig Temp: N/A °F

FORM NIS-2 (back)

9. Remarks: None

(Applicable Manufacturer's Data Reports to be attached)

CERTIFICATE OF COMPLIANCE

We certify that the statements made in this report are correct and this replacement (repair or replacement) conforms to the rules of the ASME Code, Section XI.

Signed [signature] (Owner or Owner's Designee) Supvg. ASME Codes Engineer (Title) 4/2 (Date) 19 91

CERTIFICATE OF INSPECTION

I, the undersigned holding a valid commission issued by the National Board of Boiler and Pressure Vessel Inspectors and the State or Province of California, employed by Arkwright Mutual Insurance Company (Factory Mutual System) of Norwood, Massachusetts have inspected the components described in this Owner's Report during the period from 10/13/90 to 4/2/91 and state that to the best of my knowledge and belief, this repair or replacement has been performed in accordance with Section XI of the ASME Code. By signing this certificate, neither the Inspector nor his employer makes any warranty, expressed or implied, concerning the repair or replacement in this Report. Furthermore, neither the Inspector nor his employer shall be liable in any manner for any personal injury or property damage or a loss of any kind arising from or connected with this inspection.

[signature] Commissions 1862 California
Inspector's Signature (State or Province, National Board)

Date april 2, 19 91

Note: Supplemental sheets in the form of lists, sketches, or drawings may be used provided (1) size is 8-1/2 in. x 11 in., (2) information in Items 1 through 4 on this data report is included on each sheet, and (3) each sheet is numbered and the number of sheets is recorded at the top of this form.

NIS-2
OWNER'S REPORT OF REPAIR OR REPLACEMENT

As Required by the Provisions of ASME Code Section XI

Sheet 1 of 1

1. **Owner:** Southern California Edison Company
2244 Walnut Grove Ave., Rosemead, CA 91770

ASME MO: 90022755

Unit: 1

2. **Plant:** San Onofre Nuclear Generating Station
P.O. Box 128, San Clemente, CA 92674-0128

RS: 117-90

3. **Work Performed by:** Southern California Edison

P&ID: 5178110 (E-10)

4. **System Identification:** Reactor Coolant

5. (a) **Applicable Construction Code:** Westinghouse Equipment Specification E-676044, Code Classified XI-1, Code Cases: None

(b) **Applicable Edition of Section XI Utilized for Repairs or Replacements:** 1977 Edition, S'78 Addenda, Code Cases: None

6. **Identification of Components Repaired or Replaced:**

Name of Component	Name of Manufacturer	Manufacturer Serial No.	National Board No.	Other Identification	Year Built	Repaired, Replaced, or Replacement	ASME Code Stamped Yes/No
2" Flow Control Valve	BS&B	70-71393	N/A	S1-RCP-FCV-1115A	N/A	---	No
Valve Stem Assembly	WKM	Ht. 77248-1	N/A	RIP-18-78 Stem - 347265 Pin - 313370 Inner Valve - 205804	N/A	Replacement	No
Seat Cage	WKM	Ht. 2879	N/A	RIP-18-79 Part# 348790	N/A	Replacement	No

7. **Work Description:**

The valve was overhauled to minimize seat leakage per NCR disposition. Replaced flow control and valve stem assembly consisting of stem, pin, inner valve, and seat cage. The replacements were verified as being in compliance with the original construction code.

Reference: NCR SO1-P-7315

8. **Tests Conducted:** System Leakage [ ] System Functional [X] System Inservice [ ] Hydrostatic [ ] Pneumatic [ ] Other [ ]
Pressure: 2400 psig Temp: N/A

FORM NIS-2 (back)

9. Remarks: None

(Applicable Manufacturer's Data Reports to be attached)

CERTIFICATE OF COMPLIANCE

We certify that the statements made in this report are correct and this replacement (repair or replacement) conforms to the rules of the ASME Code, Section XI.

Signed [signature] (Owner or Owner's Designee) Supvg. ASME Codes Engineer (Title) 4/2 (Date) 19 91

CERTIFICATE OF INSPECTION

I, the undersigned holding a valid commission issued by the National Board of Boiler and Pressure Vessel Inspectors and the State or Province of California, employed by Arkwright Mutual Insurance Company (Factory Mutual System) of Norwood, Massachusetts have inspected the components described in this Owner's Report during the period from 5/30/90 to 4/2/91 and state that to the best of my knowledge and belief, this repair or replacement has been performed in accordance with Section XI of the ASME Code. By signing this certificate, neither the Inspector nor his employer makes any warranty, expressed or implied, concerning the repair or replacement in this Report. Furthermore, neither the Inspector nor his employer shall be liable in any manner for any personal injury or property damage or a loss of any kind arising from or connected with this inspection.

[signature] Commissions 1862 California
Inspector's Signature (State or Province, National Board)

Date April 2, 1991

Note: Supplemental sheets in the form of lists, sketches, or drawings may be used provided (1) size is 8-1/2 in. x 11 in., (2) information in Items 1 through 4 on this data report is included on each sheet, and (3) each sheet is numbered and the number of sheets is recorded at the top of this form.

NIS-2
OWNER'S REPORT OF REPAIR OR REPLACEMENT

As Required by the Provisions of ASME Code Section XI

Sheet 1 of 1

1. Owner: Southern California Edison Company
2244 Walnut Grove Ave., Rosemead, CA 91770

ASME MO: 89070368

Unit: 1

2. Plant: San Onofre Nuclear Generating Station
P.O. Box 128, San Clemente, CA 92674-0128

RS: 11S-90

3. Work Performed by: Southern California Edison

P&ID: 5178110 (E-10)

4. System Identification: Reactor Coolant

5. (a) Applicable Construction Code: Westinghouse Equipment Specification E-676044, Code Cases: None

(b) Applicable Edition of Section XI Utilized for Repairs or Replacements: 1977 Edition, S'78 Addenda, Code Cases: None

6. Identification of Components Repaired or Replaced:

Name of Component	Name of Manufacturer	Manufacturer Serial No.	National Board No.	Other Identification	Year Built	Repaired, Replaced, or Replacement	ASME Code Stamped Yes/No
Flow Control Valve	BS&B	70-71394	N/A	S1-RCP-FCV-1115B	N/A	---	No
Valve Stem Assembly	WKM	Ht. 77246-1	N/A	Stem - 347365 Pin - 313370 Inner Valve - 205804	N/A	Replacement	No
Seat Cage	WKM	Ht. 2679	N/A	Part No. 348790	N/A	Replacement	No

7. Work Description:

Flow control valve parts consisting of stem pin, inner valve, and seat cage were replaced. The replacements were verified to be in compliance with the original construction code.

8. Tests Conducted: System Leakage [ ] System Functional [X] System Inservice [ ] Hydrostatic [ ] Pneumatic [ ] Other [ ]
Pressure: 2400 psig Temp: N/A

FORM NIS-2 (back)

9. Remarks: None

(Applicable Manufacturer's Data Reports to be attached)

CERTIFICATE OF COMPLIANCE

We certify that the statements made in this report are correct and this replacement (repair or replacement) conforms to the rules of the ASME Code, Section XI.

Signed [signature] (Owner or Owner's Designee) Supvg. ASME Codes Engineer (Title) 4/3 (Date) 1991

CERTIFICATE OF INSPECTION

I, the undersigned holding a valid commission issued by the National Board of Boiler and Pressure Vessel Inspectors and the State or Province of California, employed by Arkwright Mutual Insurance Company (Factory Mutual System) of Norwood, Massachusetts have inspected the components described in this Owner's Report during the period from 6/4/90 to 3/21/91 and state that to the best of my knowledge and belief, this repair or replacement has been performed in accordance with Section XI of the ASME Code. By signing this certificate, neither the Inspector nor his employer makes any warranty, expressed or implied, concerning the repair or replacement in this Report. Furthermore, neither the Inspector nor his employer shall be liable in any manner for any personal injury or property damage or a loss of any kind arising from or connected with this inspection.

Howard C. Slaton Commissions 1574 California
Inspector's Signature (State or Province, National Board)

Date April 4 1991

Note: Supplemental sheets in the form of lists, sketches, or drawings may be used provided (1) size is 8-1/2 in. x 11 in., (2) information in Items 1 through 4 on this data report is included on each sheet, and (3) each sheet is numbered and the number of sheets is recorded at the top of this form.

NIS-2

OWNER'S REPORT OF REPAIR OR REPLACEMENT

As Required by the Provisions of ASME Code Section XI

1. Owner: Southern California Edison Company
2244 Walnut Grove Ave., Rosemead, CA 91770

Traveler: ASME M.O.

2. Plant: San Onofre Nuclear Generating Station
P. O. Box 128, San Clemente, CA 92672

Unit: 1

MERS: 311-89

3. Work Performed by: Southern California Edison

M.O.: 89060538 001

P&ID: 5178100

4. System Identification: Reactor Coolant System (RCS)

5. (a) Applicable Construction Code: ASME VIII, 1959 edition with addenda thru 1960
Code Cases: 1270N and 1273N; reference Westinghouse spec. 569259
Code Classified: XI-1

(b) Applicable Edition of Section XI Utilized for Repairs or Replacements:
1977 Edition, Summer 1978 Addenda, Code Case: none

6. Identification of Components Repaired or Replaced:

Name of Component	Name of Manufacturer	Manufacturer Serial No.	National Board No.	Other Identification	Year Built	Repaired, Replaced, or Replacement	ASME Code Stamped Yes/No
Reactor Vessel	Combustion Engineering	61102/61201	14921	S1-RCS-C-1	1965	----------	yes
2 ea. Sockethead cap 3/8"-16 X 3 1/4", ASME SA 193 gr. B8	Al Tech.Spec. Steel Corp.	----------	---------	RSO-3171-88 ht# 0A2047 trace "U-13"	-----	Replacement	no

7. Work Description: Two pressure retaining jacking bolts on the upper conoseal of the #69 instrument port column were replaced. The replacement bolting was verified as meeting the requirements of the original part drawing (Westinghouse dwg. # 500B183) and then installed IAW procedure SO1-I-3.8 and M.O. 89060538 001.

Reference: NCR's SO1-P-7257 & SO1-P-7263

8. Tests Conducted: System Leakage [X] System Functional [ ] System Inservice [ ]
Hydrostatic [ ] Pneumatic [ ] Other: A VT-2 Examination was performed
Pressure: 2085 psig Temp: 539 °F

9. Remarks: none

(Applicable Manufacturer's Data Reports to be attached)

CERTIFICATE OF COMPLIANCE

We certify that the statements made in this report are correct and this Replacement conforms to the rules of the ASME Code, Section XI.
(repair or replacement)

Signed [signature] (Supvg ASME Codes Engineer) 7/31 19 89
(Owner or Owner's Designee) Title (Date)

CERTIFICATE OF INSPECTION

I, the undersigned holding a valid commission issued by the National Board of Boiler and Pressure Vessel Inspectors and the State or Province of California, employed by Arkwright Mutual Insurance Company (Factory Mutual System) of Norwood, Massachusetts have inspected the components described in this Owner's Report during the period from 6/9/89 to 7/27/89 and state that to the best of my knowledge and belief, this repair or replacement has been performed in accordance with Section XI of the ASME Code. By signing this certificate, neither the Inspector nor his employer makes any warranty, expressed or implied, concerning the repair or replacement in this Report. Furthermore, neither the Inspector nor his employer shall be liable in any manner for any personal injury or property damage or a loss of any kind arising from or connected with this inspection.

[signature] Commissions 1272 California
Inspector's Signature (State or Province, National Board)

Date 8/1 19 89

Note: Supplemental sheets in the form of lists, sketches, or drawings may be used provided (1) size is 8-1/2 in. x 11 in., (2) information in Items 1 through 6 on this data report is included on each sheet, and (3) each sheet is numbered and the number of sheets is recorded at the top of this form.

NIS-2
OWNER'S REPORT OF REPAIR OR REPLACEMENT

As Required by the Provisions of ASME Code Section XI

Sheet 1 of 1

1. Owner: Southern California Edison Company
2244 Walnut Grove Ave., Rosemead, CA 91770

ASME MO: 90012343

Unit: 1

2. Plant: San Onofre Nuclear Generating Station
P.O. Box 128, San Clemente, CA 92674-0128

RS: 241-90, Rev.1

3. Work Performed by: Southern California Edison

P&ID: 5178100 (G-9)

4. System Identification: Reactor Coolant

5. (a) Applicable Construction Code: Westinghouse E. Specification 675199 (original pump spec.); ASME III, NB, 1977 Edition, Winter 1977 Addenda (mandated Code for replacement case bolting), Code Classified XI-1, Code Cases: None

(b) Applicable Edition of Section XI Utilized for Repairs or Replacements: 1977 Edition, S'78 Addenda, Code Cases: None

6. Identification of Components Repaired or Replaced:

Name of Component	Name of Manufacturer	Manufacturer Serial No.	National Board No.	Other Identification	Year Built	Repaired, Replaced, or Replacement	ASME Code Stamped Yes/No
Reactor Coolant Pump	Westinghouse	1-U149	N/A	S1-RCS-G-2C	---	---	No
Casing Stud, 3-½" 8UN 2A X 34-½", (24)	Westinghouse	(S/N's listed on Cert docs) Ht. T4106	N/A	RSO 2112-90 SA540, Gr B23 Class 4	N/A	Replacement	No
Casing Stud Nut, 3-½" 8UN 2B, (24)	Westinghouse	(S/N's listed on Cert docs) Ht. T4105	N/A	RSO 2112-90 SA540, Gr. B23 Class 4	N/A	Replacement	No

7. Work Description:

Main Casing flange bolts were replaced in accordance with design change MMP 1-3615.00 SM. The replacement bolting was verified as meeting the Code requirements of the referenced design change. The design change upgraded the requirements for the replacement bolting to ASME III in addition to changing the material type. The design change reconciled the Code differences between the replacement bolting and the original bolting in accordance with ASME XI, IWA-7210. A VT-1 examination was performed on the replacements. The PSE requirements were satisfied by the performance of a VT-1 examination combined with the UT examination performed by the supplier (see supplier certification documents).

8. Tests Conducted: System Leakage [X] System Functional [ ] System Inservice [ ] Hydrostatic [ ] Pneumatic [ ] Other [X] VT-2 Examination
Pressure: 2390 & 2085 psig Temp: 540 & ambient °F

FORM NIS-2 (back)

9. **Remarks:** None

(Applicable Manufacturer's Data Reports to be attached)

CERTIFICATE OF COMPLIANCE

We certify that the statements made in this report are correct and this replacement (repair or replacement) conforms to the rules of the ASME Code, Section XI.

Signed [signature] (Owner or Owner's Designee) Supvg. ASME Codes Engineer (Title) 6 MAY (Date) 19 91

CERTIFICATE OF INSPECTION

I, the undersigned holding a valid commission issued by the National Board of Boiler and Pressure Vessel Inspectors and the State or Province of California, employed by Arkwright Mutual Insurance Company (Factory Mutual System) of Norwood, Massachusetts have inspected the components described in this Owner's Report during the period from 8/16/90 to 4/30/91 and state that to the best of my knowledge and belief, this repair or replacement has been performed in accordance with Section XI of the ASME Code. By signing this certificate, neither the Inspector nor his employer makes any warranty, expressed or implied, concerning the repair or replacement in this Report. Furthermore, neither the Inspector nor his employer shall be liable in any manner for any personal injury or property damage or a loss of any kind arising from or connected with this inspection.

[signature] Commissions 1574 California
Inspector's Signature (State or Province, National Board)

Date 5/9 19 91

Note: Supplemental sheets in the form of lists, sketches, or drawings may be used provided (1) size is 8-1/2 in. x 11 in., (2) information in Items 1 through 4 on this data report is included on each sheet, and (3) each sheet is numbered and the number of sheets is recorded at the top of this form.

NIS-2
OWNER'S REPORT OF REPAIR OR REPLACEMENT

As Required by the Provisions of ASME Code Section XI

Sheet 1 of 1

ASME MO: 9011013S

Unit: 1

RS: 390-90

P&ID: 5178100 (C-3)

1. Owner: Southern California Edison Company
   2244 Walnut Grove Ave., Rosemead, CA 91770

2. Plant: San Onofre Nuclear Generating Station
   P.O. Box 128, San Clemente, CA 92674-0128

3. Work Performed by: Southern California Edison

4. System Identification: Reactor Coolant

5. (a) Applicable Construction Code: Westinghouse Equipment Spec. 675239, Code Classified XI-1, Code Cases: None

   (b) Applicable Edition of Section XI Utilized for Repairs or Replacements: 1977 Edition, S'78 Addenda, Code Cases: None

6. Identification of Components Repaired or Replaced:

Name of Component	Name of Manufacturer	Manufacturer Serial No.	National Board No.	Other Identification	Year Built	Repaired, Replaced, or Replacement	ASME Code Stamped Yes/No
3/4" Thermowell	Weed Instruments	2502	N/A	S1-RCS-TE-410C	N/A	---	No
3/4" NPS Plug	CyTemp/Hub	Ht. 1G7203	N/A	RSO 3608-90	N/A	Replacement	No

7. Work Description:

   The addressed thermowell was plugged. The plug was fabricated from material compatible with the original construction code requirements. The plug was installed and seal weld into the thermowell. A preweld and postweld NDE/PT was performed with no relevant indications noted.

   Reference: MMP 1-3641.00SJ, WR1-90-082, 1PT-006-91, 1PT-007-91

8. Tests Conducted: System Leakage [X] System Functional [ ] System Inservice [ ] Hydrostatic [ ] Pneumatic [ ] Other [ ]
   Pressure: 2090 psig Temp: 545 °F

FORM NIS-2 (back)

9. **Remarks:** None

(Applicable Manufacturer's Data Reports to be attached)

CERTIFICATE OF COMPLIANCE

We certify that the statements made in this report are correct and this replacement (repair or replacement) conforms to the rules of the ASME Code, Section XI.

Signed [signature] (Owner or Owner's Designee) Supvg. ASME Codes Engineer (Title) 4/3 (Date) 1991

CERTIFICATE OF INSPECTION

I, the undersigned holding a valid commission issued by the National Board of Boiler and Pressure Vessel Inspectors and the State or Province of California, employed by Arkwright Mutual Insurance Company (Factory Mutual System) of Norwood, Massachusetts have inspected the components described in this Owner's Report during the period from 12/14/90 to 4/2/91 and state that to the best of my knowledge and belief, this repair or replacement has been performed in accordance with Section XI of the ASME Code. By signing this certificate, neither the Inspector nor his employer makes any warranty, expressed or implied, concerning the repair or replacement in this Report. Furthermore, neither the Inspector nor his employer shall be liable in any manner for any personal injury or property damage or a loss of any kind arising from or connected with this inspection.

Inspector's Signature [signature] Commissions 1574 California (State or Province, National Board)

Date April 3 1991

Note: Supplemental sheets in the form of lists, sketches, or drawings may be used provided (1) size is 8-1/2 in. x 11 in., (2) information in Items 1 through 4 on this data report is included on each sheet, and (3) each sheet is numbered and the number of sheets is recorded at the top of this form.

NIS-2
OWNER'S REPORT OF REPAIR OR REPLACEMENT

As Required by the Provisions of ASME Code Section XI

Sheet 1 of 1

1. Owner: Southern California Edison Company
2244 Walnut Grove Ave., Rosemead, CA 91770

ASME MO: 88090530

Unit: 1

2. Plant: San Onofre Nuclear Generating Station
P.O. Box 128, San Clemente, CA 92674-0128

RS: 380-88

3. Work Performed by: Southern California Edison

P&ID: 5178130 (B-2)

4. System Identification: Residual Heat Removal

5. (a) Applicable Construction Code: Westinghouse E675198, Code Classified XI-1, Code Cases: None

(b) Applicable Edition of Section XI Utilized for Repairs or Replacements: 1977 Edition, S'78 Addenda, Code Cases: None

6. Identification of Components Repaired or Replaced:

Name of Component	Name of Manufacturer	Manufacturer Serial No.	National Board No.	Other Identification	Year Built	Repaired, Replaced, or Replacement	ASME Code Stamped Yes/No
8" Gate Valve	Crane	N/A	N/A	S1-RHR-MOV-813	N/A	---	No
Pipe Plug	H&D Steel	Ht. 98249	N/A	RSO 1601-90	N/A	Replacement	No

7. Work Description:

A design change was initiated to allow for the installation of Chesterton live load packing. This required the installation of an unthreaded plug to replace the packing gland leak-off line. The plug material (SA-479, TP316) was verified as being compatible with the installation and system requirements. The plug was machined to proper tolerances and installed by welding. A NDE(PT) examination was conducted on the weld area with no relevant indications noted. After installation a VT-2 examination was conducted at system operating pressure with no leakage noted.

Reference: PFC 1-88-047, FCN's S5320, S3995M, S4103M, and S4104M, DCN AB-2113, WR1-88-904

8. Tests Conducted: System Leakage [X] System Functional [ ] System Inservice [ ] Hydrostatic [ ] Pneumatic [ ] Other [ ]
Pressure: 355 psig Temp: 142 °F

FORM NIS-2 (back)

9. **Remarks:** None

(Applicable Manufacturer's Data Reports to be attached)

CERTIFICATE OF COMPLIANCE

We certify that the statements made in this report are correct and this replacement (repair or replacement) conforms to the rules of the ASME Code, Section XI:

Signed [signature] (Owner or Owner's Designee) Supvg. ASME Codes Engineer (Title) 30 April 1991 (Date)

CERTIFICATE OF INSPECTION

I, the undersigned holding a valid commission issued by the National Board of Boiler and Pressure Vessel Inspectors and the State or Province of California, employed by Arkwright Mutual Insurance Company (Factory Mutual System) of Norwood, Massachusetts have inspected the components described in this Owner's Report during the period from 1/16/89 to 4/30/91 and state that to the best of my knowledge and belief, this repair or replacement has been performed in accordance with Section XI of the ASME Code. By signing this certificate, neither the Inspector nor his employer makes any warranty, expressed or implied, concerning the repair or replacement in this Report. Furthermore, neither the Inspector nor his employer shall be liable in any manner for any personal injury or property damage or a loss of any kind arising from or connected with this inspection.

[signature] Commissions 1862 California
Inspector's Signature (State or Province, National Board)

Date April 30, 1991

Note: Supplemental sheets in the form of lists, sketches, or drawings may be used provided (1) size is 8-1/2 in. x 11 in., (2) information in Items 1 through 4 on this data report is included on each sheet, and (3) each sheet is numbered and the number of sheets is recorded at the top of this form.

NIS-2
OWNER'S REPORT OF REPAIR OR REPLACEMENT

As Required by the Provisions of ASME Code Section XI

1. Owner: Southern California Edison Company
2244 Walnut Grove Ave., Rosemead, CA 91770

ASME MO: 88090531

Unit: 1

2. Plant: San Onofre Nuclear Generating Station
P.O. Box 128, San Clemente, CA 92674-0128

RS: 381-88

3. Work Performed by: Southern California Edison

P&ID: 5178130 (B-2)

4. System Identification: Residual Heat Removal

5. (a) Applicable Construction Code: Westinghouse E675198, Code Classified XI-1, Code Cases: None

(b) Applicable Edition of Section XI Utilized for Repairs or Replacements: 1977 Edition, S'78 Addenda, Code Cases: None

6. Identification of Components Repaired or Replaced:

Name of Component	Name of Manufacturer	Manufacturer Serial No.	National Board No.	Other Identification	Year Built	Repaired, Replaced, or Replacement	ASME Code Stamped Yes/No
8" Gate Valve	Crane	N/A	N/A	S1-RHR-MOV-814	N/A	---	No
Plug	H&D Steel	Ht. 98249	N/A	RSO 1601-90	N/A	Replacement	No

7. Work Description:

A design change was initiated to allow for the installation of Chesterton live load packing. This required the installation of an unthreaded plug to replace the packing gland leak-off line. The plug material (SA-479, TP316) was verified as being compatible with the installation and system requirements. The plug was machined to proper tolerances and installed by welding. A NDE(PT) examination was conducted on the weld area with no relevant indications noted. After installation a VT-2 examination was conducted at system operating pressure with no leakage noted.

Reference: FCN S3996M, 5320M, S4103M and S4104M, WR1-88-905

8. Tests Conducted: System Leakage [X] System Functional [ ] System Inservice [ ] Hydrostatic [ ] Pneumatic [ ] Other [ ]
Pressure: 355 psig Temp: 142 °F

FORM NIS-2 (back)

9. **Remarks:** None

(Applicable Manufacturer's Data Reports to be attached)

CERTIFICATE OF COMPLIANCE

We certify that the statements made in this report are correct and this replacement (repair or replacement) conforms to the rules of the ASME Code, Section XI.

Signed [signature] (Owner or Owner's Designee) Supvg. ASME Codes Engineer (Title) 30 April (Date) 19 91

CERTIFICATE OF INSPECTION

I, the undersigned holding a valid commission issued by the National Board of Boiler and Pressure Vessel Inspectors and the State or Province of California, employed by Arkwright Mutual Insurance Company (Factory Mutual System) of Norwood, Massachusetts have inspected the components described in this Owner's Report during the period from 1/16/89 to 4/30/91 and state that to the best of my knowledge and belief, this repair or replacement has been performed in accordance with Section XI of the ASME Code. By signing this certificate, neither the Inspector nor his employer makes any warranty, expressed or implied, concerning the repair or replacement in this Report. Furthermore, neither the Inspector nor his employer shall be liable in any manner for any personal injury or property damage or a loss of any kind arising from or connected with this inspection.

[signature] Commissions 1862 California
Inspector's Signature (State or Province, National Board)

Date April 30, 1991

Note: Supplemental sheets in the form of lists, sketches, or drawings may be used provided (1) size is 8-1/2 in. x 11 in., (2) information in Items 1 through 4 on this data report is included on each sheet, and (3) each sheet is numbered and the number of sheets is recorded at the top of this form.

NIS-2
OWNER'S REPORT OF REPAIR OR REPLACEMENT

As Required by the Provisions of ASME Code Section XI

Sheet 1 of 1

1. Owner: Southern California Edison Company
2244 Walnut Grove Ave., Rosemead, CA 91770

ASME MO: 88090527

Unit: 1

2. Plant: San Onofre Nuclear Generating Station
P.O. Box 128, San Clemente, CA 92674-0128

RS: 3S4-SS Rev.1

3. Work Performed by: Southern California Edison

P&ID: 5178130 (C-11)

4. System Identification: Residual Heat Removal

5. (a) Applicable Construction Code: Westinghouse E675198, Code Classified XI-1, Code Cases: None

(b) Applicable Edition of Section XI Utilized for Repairs or Replacements: 1977 Edition, S'78 Addenda, Code Cases: None

6. Identification of Components Repaired or Replaced:

Name of Component	Name of Manufacturer	Manufacturer Serial No.	National Board No.	Other Identification	Year Built	Repaired, Replaced, or Replacement	ASME Code Stamped Yes/No
6" Gate Valve	Crane	N/A	N/A	S1-RHR-MOV-833	N/A	---	No
Pipe Plug	H&D Steel	Ht. 98249	N/A	RSO 1601-90	N/A	Replacement	No

7. Work Description:

A design change was initiated to allow for the installation of Chesterton live load packing. This required the installation of an unthreaded plug to replace the packing gland leak-off line. The plug material (SA-479, TP316) was verified as being compatible with the installation and system requirements. The plug was machined to proper tolerances and installed by welding. A NDE(PT) examination was conducted on the weld area with no relevant indications noted. After installation a VT-2 examination was conducted at system operating pressure with no leakage noted.

Reference: PFC 1-88-047, FCN's S5320, S4104M, and S4372M, DCN AB-2113, WR1-88-908

8. Tests Conducted: System Leakage [X] System Functional [ ] System Inservice [ ] Hydrostatic [ ] Pneumatic [ ] Other [ ]
Pressure: 355 psig Temp: 142 °F

FORM NIS-2 (back)

9. **Remarks:** None

(Applicable Manufacturer's Data Reports to be attached)

CERTIFICATE OF COMPLIANCE

We certify that the statements made in this report are correct and this replacement (repair or replacement) conforms to the rules of the ASME Code, Section XI.

Signed [signature] (Owner or Owner's Designee) Supvg. ASME Codes Engineer (Title) 30 April (Date) 19 91

CERTIFICATE OF INSPECTION

I, the undersigned holding a valid commission issued by the National Board of Boiler and Pressure Vessel Inspectors and the State or Province of California, employed by Arkwright Mutual Insurance Company (Factory Mutual System) of Norwood, Massachusetts have inspected the components described in this Owner's Report during the period from 6/6/90 to 4/30/91 and state that to the best of my knowledge and belief, this repair or replacement has been performed in accordance with Section XI of the ASME Code. By signing this certificate, neither the Inspector nor his employer makes any warranty, expressed or implied, concerning the repair or replacement in this Report. Furthermore, neither the Inspector nor his employer shall be liable in any manner for any personal injury or property damage or a loss of any kind arising from or connected with this inspection.

[signature] Commissions 1862 California
Inspector's Signature (State or Province, National Board)

Date April 30, 1991

Note: Supplemental sheets in the form of lists, sketches, or drawings may be used provided (1) size is 8-1/2 in. x 11 in., (2) information in Items 1 through 4 on this data report is included on each sheet, and (3) each sheet is numbered and the number of sheets is recorded at the top of this form.

NIS-2
OWNER'S REPORT OF REPAIR OR REPLACEMENT

As Required by the Provisions of ASME Code Section XI

1. Owner: Southern California Edison Company
   2244 Walnut Grove Ave., Rosemead, CA 91770

   ASME MO: 90111481

   Unit: 1

2. Plant: San Onofre Nuclear Generating Station
   P.O. Box 128, San Clemente, CA 92674-0128

   RS: 391-90 Revi.0

3. Work Performed by: Southern California Edison

   P&ID: 5178115 (D-7)

4. System Identification: Safety Injection

5. (a) Applicable Construction Code: ASA B31.1, 1955 Edition, Code Classified XI-1, Code Cases: None

   (b) Applicable Edition of Section XI Utilized for Repairs or Replacements: 1977 Edition, S'78 Addenda, Code Cases: None

6. Identification of Components Repaired or Replaced:

Name of Component	Name of Manufacturer	Manufacturer Serial No.	National Board No.	Other Identification	Year Built	Repaired, Replaced, or Replacement	ASME Code Stamped Yes/No
Piping System	N/A	N/A	N/A	S1-SIS-340	N/A	Replaced	No
Pipe Cap	Capitol	Ht. BK67	N/A	RSO 1895-84	N/A	Replacement	No

7. Work Description:

   A crack was found in the drain line from S1-SIS-340 due to over stress. The valve and most of the associated drain line will be removed and replaced by a cap. The replacement cap (SA-182 F304) was verified to be in compliance with the original construction code requirements and installed by welding.

   References: FCN S-5417M, NCR 90060045

8. Tests Conducted: System Leakage [ ] System Functional [X] System Inservice [ ] Hydrostatic [ ] Pneumatic [ ] Other [ ]
   Pressure: 1180 psig Temp: N/A

FORM NIS-2 (back)

9. **Remarks:** None

(Applicable Manufacturer's Data Reports to be attached)

CERTIFICATE OF COMPLIANCE

We certify that the statements made in this report are correct and this replacement (repair or replacement) conforms to the rules of the ASME Code, Section XI.

Signed [signature] (Owner or Owner's Designee) Supvg. ASME Codes Engineer (Title) 4/3 (Date) 1991

CERTIFICATE OF INSPECTION

I, the undersigned holding a valid commission issued by the National Board of Boiler and Pressure Vessel Inspectors and the State or Province of California, employed by Arkwright Mutual Insurance Company (Factory Mutual System) of Norwood, Massachusetts have inspected the components described in this Owner's Report during the period from 12/27/90 to 4/4/91 and state that to the best of my knowledge and belief, this repair or replacement has been performed in accordance with Section XI of the ASME Code. By signing this certificate, neither the Inspector nor his employer makes any warranty, expressed or implied, concerning the repair or replacement in this Report. Furthermore, neither the Inspector nor his employer shall be liable in any manner for any personal injury or property damage or a loss of any kind arising from or connected with this inspection.

[signature] Commissions 1862 California
Inspector's Signature (State or Province, National Board)

Date April 4 1991

Note: Supplemental sheets in the form of lists, sketches, or drawings may be used provided (1) size is 8-1/2 in. x 11 in., (2) information in Items 1 through 4 on this data report is included on each sheet, and (3) each sheet is numbered and the number of sheets is recorded at the top of this form.

NIS-2
OWNER'S REPORT OF REPAIR OR REPLACEMENT

As Required by the Provisions of ASME Code Section XI

ASME MO: 90080760001

Unit: 1

RS: 287-90

P&ID: 5178105

1. Owner: Southern California Edison Company
   2244 Walnut Grove Ave., Rosemead, CA 91770

2. Plant: San Onofre Nuclear Generating Station
   P.O. Box 128, San Clemente, CA 92674-0128

3. Work Performed by: Southern California Edison

4. System Identification: Reactor Coolant System

5. (a) Applicable Construction Code: Westinghouse Equipment Specification 675197, Code Classified XI-1, Code Cases: None

   (b) Applicable Edition of Section XI Utilized for Repairs or Replacements: 1977 Edition, S'78 Addenda, Code Cases: None

6. Identification of Components Repaired or Replaced:

Name of Component	Name of Manufacturer	Manufacturer Serial No.	National Board No.	Other Identification	Year Built	Repaired, Replaced, or Replacement	ASME Code Stamped Yes/No
3" x 6" Pressurizer Safety Valve	Crosby Valve & Gage	47469-532	N/A	024-18820 (47469-M1-532)	---	Repaired	Yes (NV)

7. Work Description:

During receiving inspection of the valve (on its return from the vendor facility) the presence of several linear indications were identified (visually) on the valve's outlet flange. The indications are documented on NCR's 90080051 and 90080235. The indications were removed by grinding as documented on ASME MO 90080760001. A PT examination was performed to verify complete removal of all three indications. Due to the resultant depth and location of the repair cavities no weld repairs were required.

8. Tests Conducted: System Leakage [ ] System Functional [ ] System Inservice [ ] Hydrostatic [ ] Pneumatic [ ] Other [X]
   Pressure: N/A psig Temp: N/A

FORM NIS-2 (back)

9. **Remarks:** A system pressure was performed during the installation.

(Applicable Manufacturer's Data Reports to be attached)

CERTIFICATE OF COMPLIANCE

We certify that the statements made in this report are correct and this repair (repair or replacement) conforms to the rules of the ASME Code, Section XI.

Signed [illegible] Supvg. ASME Codes Engineer 6/8 199[illegible]
(Owner or Owner's Designee) Title (Date)

CERTIFICATE OF INSPECTION

I, the undersigned holding a valid commission issued by the National Board of Boiler and Pressure Vessel Inspectors and the State or Province of California, employed by Arkwright Mutual Insurance Company (Factory Mutual System) of Norwood, Massachusetts have inspected the components described in this Owner's Report during the period from 8/30/90 to 6/8/91 and state that to the best of my knowledge and belief, this repair or replacement has been performed in accordance with Section XI of the ASME Code. By signing this certificate, neither the Inspector nor his employer makes any warranty, expressed or implied, concerning the repair or replacement in this Report. Furthermore, neither the Inspector nor his employer shall be liable in any manner for any personal injury or property damage or a loss of any kind arising from or connected with this inspection.

[illegible] Commissions 1862 California
Inspector's Signature (State or Province, National Board)

Date June 8, 1991

Note: Supplemental sheets in the form of lists, sketches, or drawings may be used provided (1) size is 8-1/2 in. x 11 in., (2) information in Items 1 through 4 on this data report is included on each sheet, and (3) each sheet is numbered and the number of sheets is recorded at the top of this form.

NIS-2
OWNER'S REPORT OF REPAIR OR REPLACEMENT

As Required by the Provisions of ASME Code Section XI

1. Owner: Southern California Edison Company
2244 Walnut Grove Ave., Rosemead, CA 91770

ASME MO: 90102861

Unit: 1

2. Plant: San Onofre Nuclear Generating Station
P.O. Box 128, San Clemente, CA 92674-0128

RS: 361-90

3. Work Performed by: Southern California Edison

P&ID: 5178111 (E-10)

4. System Identification: Reactor Coolant Pump Seal Water

5. (a) Applicable Construction Code: ASA B31.1, 1980 Edition, Code Classified XI-2, Code Cases: None

(b) Applicable Edition of Section XI Utilized for Repairs or Replacements: 1977 Edition, S'78 Addenda, Code Cases: None

6. Identification of Components Repaired or Replaced:

Name of Component	Name of Manufacturer	Manufacturer Serial No.	National Board No.	Other Identification	Year Built	Repaired, Replaced, or Replacement	ASME Code Stamped Yes/No
3/8" Pipe Support	N/A	N/A	N/A	S1-01-2055-H00A	N/A	---	No
3/8" Load Pin	Pacific Scientific	Ht. N2826	N/A	RSO 1592-88 SA-564, Gr. 630	N/A	Replacement	No

7. Work Description:

The load pin connecting the sway strut to the pipe clamp was lost while this support was removed for the RCP "C" motor work. The replacement load pin was verified as meeting the requirements of the original construction code and installed. A VT-3 examination was performed on the support assembly with satisfactory results.

8. Tests Conducted: System Leakage [ ] System Functional [ ] System Inservice [ ] Hydrostatic [ ] Pneumatic [ ] Other [ ]
Pressure: N/A psig Temp: N/A

FORM NIS-2 (back)

9. Remarks: None

(Applicable Manufacturer's Data Reports to be attached)

CERTIFICATE OF COMPLIANCE

We certify that the statements made in this report are correct and this replacement (repair or replacement) conforms to the rules of the ASME Code, Section XI.

Signed [signature] (Owner or Owner's Designee) Supvg. ASME Codes Engineer (Title) 11 March (Date) 19 91

CERTIFICATE OF INSPECTION

I, the undersigned holding a valid commission issued by the National Board of Boiler and Pressure Vessel Inspectors and the State or Province of California, employed by Arkwright Mutual Insurance Company (Factory Mutual System) of Norwood, Massachusetts have inspected the components described in this Owner's Report during the period from 11/4/90 to 3/12/91 and state that to the best of my knowledge and belief, this repair or replacement has been performed in accordance with Section XI of the ASME Code. By signing this certificate, neither the Inspector nor his employer makes any warranty, expressed or implied, concerning the repair or replacement in this Report. Furthermore, neither the Inspector nor his employer shall be liable in any manner for any personal injury or property damage or a loss of any kind arising from or connected with this inspection.

[signature] Commissions 1864 California
Inspector's Signature (State or Province, National Board)

Date March 12 19 91

Note: Supplemental sheets in the form of lists, sketches, or drawings may be used provided (1) size is 8-1/2 in. x 11 in., (2) information in Items 1 through 4 on this data report is included on each sheet, and (3) each sheet is numbered and the number of sheets is recorded at the top of this form.

NIS-2
OWNER'S REPORT OF REPAIR OR REPLACEMENT

As Required by the Provisions of ASME Code Section XI

Sheet 1 of 1

1. **Owner:** Southern California Edison Company
   2244 Walnut Grove Ave., Rosemead, CA 91770

2. **Plant:** San Onofre Nuclear Generating Station
   P.O. Box 128, San Clemente, CA 92674-0128

3. **Work Performed by:** Southern California Edison

4. **System Identification:** Component Cooling Water

ASME MO: 90091551

Unit: 1

RS: 333-90

P&ID: 5178311 (F-2)

5. (a) **Applicable Construction Code:** ANSI/ASME B31.1 - 1980, AWS D1.1 - 1980, Code Classified XI-2, Code Cases: None

   (b) **Applicable Edition of Section XI Utilized for Repairs or Replacements:** 1977 Edition, S'78 Addenda, Code Cases: None

6. **Identification of Components Repaired or Replaced:**

Name of Component	Name of Manufacturer	Manufacturer Serial No.	National Board No.	Other Identification	Year Built	Repaired, Replaced, or Replacement	ASME Code Stamped Yes/No
Pipe Support	N/A	N/A	N/A	S1-01-3073-E-315	N/A	Repaired	No

7. **Work Description:**

   To facilitate the replacement of flow indicator S1-CCW-FIC-607A, the pipe support was removed and reinstalled in accordance with weld record WR1-90-700.

8. **Tests Conducted:** System Leakage [ ] System Functional [ ] System Inservice [ ] Hydrostatic [ ] Pneumatic [ ] Other [ ]
   Pressure: N/A psig Temp: N/A

FORM NIS-2 (back)

9. **Remarks:** None

(Applicable Manufacturer's Data Reports to be attached)

CERTIFICATE OF COMPLIANCE

We certify that the statements made in this report are correct and this repair (repair or replacement) conforms to the rules of the ASME Code, Section XI.

Signed [signature] (Owner or Owner's Designee) Supvg. ASME Codes Engineer (Title) 1-24 (Date) 1991

CERTIFICATE OF INSPECTION

I, the undersigned holding a valid commission issued by the National Board of Boiler and Pressure Vessel Inspectors and the State or Province of California, employed by Arkwright Mutual Insurance Company (Factory Mutual System) of Norwood, Massachusetts have inspected the components described in this Owner's Report during the period from 1/14/90 to 1/27/90 and state that to the best of my knowledge and belief, this repair or replacement has been performed in accordance with Section XI of the ASME Code. By signing this certificate, neither the Inspector nor his employer makes any warranty, expressed or implied, concerning the repair or replacement in this Report. Furthermore, neither the Inspector nor his employer shall be liable in any manner for any personal injury or property damage or a loss of any kind arising from or connected with this inspection.

[signature] Commissions 1862 California
Inspector's Signature (State or Province, National Board)

Date January 27, 1991

Note: Supplemental sheets in the form of lists, sketches, or drawings may be used provided (1) size is 8-1/2 in. x 11 in., (2) information in Items 1 through 4 on this data report is included on each sheet, and (3) each sheet is numbered and the number of sheets is recorded at the top of this form.

NIS-2
OWNER'S REPORT OF REPAIR OR REPLACEMENT

As Required by the Provisions of ASME Code Section XI

1. **Owner:** Southern California Edison Company
   2244 Walnut Grove Ave., Rosemead, CA 91770

   ASME MO: 90091553

   Unit: 1

2. **Plant:** San Onofre Nuclear Generating Station
   P.O. Box 128, San Clemente, CA 92674-0128

   RS: 335-90

3. **Work Performed by:** Southern California Edison

   P&ID: 5178311 (G-2)

4. **System Identification:** Component Cooling Water

5. (a) **Applicable Construction Code:** ANSI/ASME B31.1-1980/AWS D1.1-1980, Code Classified XI-2, Code Cases: None

   (b) **Applicable Edition of Section XI Utilized for Repairs or Replacements:** 1977 Edition, S'78 Addenda, Code Cases: None

6. **Identification of Components Repaired or Replaced:**

Name of Component	Name of Manufacturer	Manufacturer Serial No.	National Board No.	Other Identification	Year Built	Repaired, Replaced, or Replacement	ASME Code Stamped Yes/No
Pipe Supports	N/A	N/A	N/A	S1-01-3073-H-325	N/A	Repaired	No

7. **Work Description:**

   To facilitate the replacement of flow indicator S1-CCW-FIC-607C, the pipe support was removed and reinstalled in accordance with weld record WR1-90-702.

8. **Tests Conducted:** System Leakage [ ] System Functional [ ] System Inservice [ ] Hydrostatic [ ] Pneumatic [ ] Other [ ]
   Pressure: N/A psig Temp: N/A °F

FORM NIS-2 (back)

9. **Remarks:** None

(Applicable Manufacturer's Data Reports to be attached)

CERTIFICATE OF COMPLIANCE

We certify that the statements made in this report are correct and this repair (repair or replacement) conforms to the rules of the ASME Code, Section XI.

Signed [signature] (Owner or Owner's Designee) Supvg. ASME Codes Engineer (Title) 1-24 (Date) 1991

CERTIFICATE OF INSPECTION

I, the undersigned holding a valid commission issued by the National Board of Boiler and Pressure Vessel Inspectors and the State or Province of California, employed by Arkwright Mutual Insurance Company (Factory Mutual System) of Norwood, Massachusetts have inspected the components described in this Owner's Report during the period from 1/4/90 to 1-14-91 and state that to the best of my knowledge and belief, this repair or replacement has been performed in accordance with Section XI of the ASME Code. By signing this certificate, neither the Inspector nor his employer makes any warranty, expressed or implied, concerning the repair or replacement in this Report. Furthermore, neither the Inspector nor his employer shall be liable in any manner for any personal injury or property damage or a loss of any kind arising from or connected with this inspection.

[signature] Commissions 1862 California
Inspector's Signature (State or Province, National Board)

Date February 5, 1991

Note: **Supplemental sheets in the form of lists, sketches, or drawings may be used provided (1) size is 8-1/2 in. x 11 in., (2) information in Items 1 through 4 on this data report is included on each sheet, and (3) each sheet is numbered and the number of sheets is recorded at the top of this form.**

NIS-2
OWNER'S REPORT OF REPAIR OR REPLACEMENT

As Required by the Provisions of ASME Code Section XI

1. Owner: Southern California Edison Company
2244 Walnut Grove Ave., Rosemead, CA 91770

ASME MO: 90101782

Unit: 1

2. Plant: San Onofre Nuclear Generating Station
P.O. Box 128, San Clemente, CA 92674-0128

RS: GEN-004

3. Work Performed by: Southern California Edison

P&ID: 5178205

4. System Identification: Feedwater

5. (a) Applicable Construction Code: ASA B31.1, 1955 Edition, Code Classified XI-2, Code Cases: None

(b) Applicable Edition of Section XI Utilized for Repairs or Replacements: 1977 Edition, S'78 Addenda, Code Cases: None

6. Identification of Components Repaired or Replaced:

Name of Component	Name of Manufacturer	Manufacturer Serial No.	National Board No.	Other Identification	Year Built	Repaired, Replaced, or Replacement	ASME Code Stamped Yes/No
Mechanical Snubber PSA 10-6	Pacific Scientific	16866	N/A	S1-05-0318-H-014	---	Replaced	---
Mechanical Snubber PSA 10-6	Pacific Scientific	2135	N/A	RSO 4190-84	1977	Replacement	Yes

7. Work Description:

The mechanical snubber was replaced as a preventative maintenance action. The replacement snubber was verified as meeting the requirements of the original construction code, as documented in code reconciliation CR-90-002. Prior to installation, the snubber was functionally tested and visually inspected (VT-4). After installation, the snubber attachment points were visually inspected (VT-3).

8. Tests Conducted: System Leakage [ ] System Functional [ ] System Inservice [ ] Hydrostatic [ ] Pneumatic [ ] Other [X] VT-4 & VT-3
Pressure: N/A psig Temp: N/A

FORM NIS-2 (back)

9. Remarks: None

(Applicable Manufacturer's Data Reports to be attached)

CERTIFICATE OF COMPLIANCE

We certify that the statements made in this report are correct and this replacement (repair or replacement) conforms to the rules of the ASME Code, Section XI.

Signed [signature] (Owner or Owner's Designee) Supvg. ASME Codes Engineer (Title) 13 Feb (Date) 1991

CERTIFICATE OF INSPECTION

I, the undersigned holding a valid commission issued by the National Board of Boiler and Pressure Vessel Inspectors and the State or Province of California, employed by Arkwright Mutual Insurance Company (Factory Mutual System) of Norwood, Massachusetts have inspected the components described in this Owner's Report during the period from 10/17/90 to 2/14/91 and state that to the best of my knowledge and belief, this repair or replacement has been performed in accordance with Section XI of the ASME Code. By signing this certificate, neither the Inspector nor his employer makes any warranty, expressed or implied, concerning the repair or replacement in this Report. Furthermore, neither the Inspector nor his employer shall be liable in any manner for any personal injury or property damage or a loss of any kind arising from or connected with this inspection.

[signature] Commissions 1864 California
Inspector's Signature (State or Province, National Board)

Date Feb 14 1991

Note: Supplemental sheets in the form of lists, sketches, or drawings may be used provided (1) size is 8-1/2 in. x 11 in., (2) information in Items 1 through 4 on this data report is included on each sheet, and (3) each sheet is numbered and the number of sheets is recorded at the top of this form.

ASME SECTION XI ABSTRACT
OWNER'S SUMMARY OF REPAIR OR REPLACEMENT

1. **Owner:** Southern California Edison Company
   2244 Walnut Grove Ave., Rosemead, CA 91770

   ASME MO: 90082392

   Unit: 1

2. **Plant:** San Onofre Nuclear Generating Station
   P.O. Box 128, San Clemente, CA 92674-0128

   RS: 322-90

3. **Work Performed by:** Southern California Edison

   P&ID: 5178115

4. **System Identification:** Safety Injection

5. **Plant Tag No.:** S1-05-6002-H-008 **Serial No.:** 16864

6. **Component:** Mechanical Snubber **Name:** Pacific Scientific **Size:** PSA 10-6

7. **Code:** ANSI B31.1, 1980 Edition **Class:** XI-2

8. **Purpose (Statement of Problem):**

   The existing snubber is being replaced as a result of failing the functional testing.

9. **Narrative Summary (Brief Description of Work Performed):**

   The snubber was replaced with an in-kind replacement, verified to meet the requirements of the original construction code. Satisfactory VT-1, 3 and 4 examinations were conducted on the snubber and connections.

   Reference: NCR 90080246

10. **Material Used:**

    Mechanical Snubber

Prepared By: K.L. Collins **Date:** February 21, 1991

NIS-2
OWNER'S REPORT OF REPAIR OR REPLACEMENT

As Required by the Provisions of ASME Code Section XI

1. Owner: Southern California Edison Company
   2244 Walnut Grove Ave., Rosemead, CA 91770

   ASME MO: 90082392

   Unit: 1

2. Plant: San Onofre Nuclear Generating Station
   P.O. Box 128, San Clemente, CA 92674-0128

   RS: 322-90

3. Work Performed by: Southern California Edison

   P&ID: 5178115

4. System Identification: Safety Injection

5. (a) **Applicable Construction Code:** ANSI B31.1, 1980 Edition, Code Classified XI-2, Code Cases: None

   (b) **Applicable Edition of Section XI Utilized for Repairs or Replacements:** 1977 Edition, S'78 Addenda, Code Cases: None

6. **Identification of Components Repaired or Replaced:**

Name of Component	Name of Manufacturer	Manufacturer Serial No.	National Board No.	Other Identification	Year Built	Repaired, Replaced, or Replacement	ASME Code Stamped Yes/No
Mechanical Snubber PSA 10-6	Pacific Scientific	16864	N/A	S1-05-6002-H-008	N/A	Replaced	No
Mechanical Snubber PSA 10-6	Pacific Scientific	15004	N/A	RS02-P-159-84	1983	Replacement	No

7. **Work Description:**

   The existing snubber was replaced as a result of failing the functional testing. The snubber was replaced with an in-kind replacement, verified to meet the requirements of the original construction code. Satisfactory VT-1, 3 and 4 examinations were conducted on the snubber and connections.

   Reference: NCR 90080246

8. **Tests Conducted:** System Leakage [ ] System Functional [ ] System Inservice [ ] Hydrostatic [ ] Pneumatic [ ] Other [ ]
   Pressure: N/A psig Temp: N/A

FORM NIS-2 (back)

9. **Remarks:** None

(Applicable Manufacturer's Data Reports to be attached)

CERTIFICATE OF COMPLIANCE

We certify that the statements made in this report are correct and this replacement (repair or replacement) conforms to the rules of the ASME Code, Section XI.

Signed [signature] (Owner or Owner's Designee) Supvg. ASME Codes Engineer (Title) 11 March (Date) 1991

CERTIFICATE OF INSPECTION

I, the undersigned holding a valid commission issued by the National Board of Boiler and Pressure Vessel Inspectors and the State or Province of California, employed by Arkwright Mutual Insurance Company (Factory Mutual System) of Norwood, Massachusetts have inspected the components described in this Owner's Report during the period from 10/15/90 to 3/12/91 and state that to the best of my knowledge and belief, this repair or replacement has been performed in accordance with Section XI of the ASME Code. By signing this certificate, neither the Inspector nor his employer makes any warranty, expressed or implied, concerning the repair or replacement in this Report. Furthermore, neither the Inspector nor his employer shall be liable in any manner for any personal injury or property damage or a loss of any kind arising from or connected with this inspection.

[signature] Commissions 1862 California
Inspector's Signature (State or Province, National Board)

Date March 12, 1991

Note: Supplemental sheets in the form of lists, sketches, or drawings may be used provided (1) size is 8-1/2 in. x 11 in., (2) information in Items 1 through 4 on this data report is included on each sheet, and (3) each sheet is numbered and the number of sheets is recorded at the top of this form.

NIS-2

OWNER'S REPORT OF REPAIR OR REPLACEMENT

As Required by the Provisions of ASME Code Section XI

1. **Owner:** Southern California Edison Company
   2244 Walnut Grove Ave., Rosemead, CA 91770

ASME MO: 90082393

Unit: 1

2. **Plant:** San Onofre Nuclear Generating Station
   P.O. Box 128, San Clemente, CA 92674-0128

RS: GEN-004

3. **Work Performed by:** Southern California Edison

P&ID: 5178115

4. **System Identification:** Safety Injection

5. (a) **Applicable Construction Code:** ASA B31.1, 1955 Edition, Code Classified XI-2, Code Cases: None

   (b) **Applicable Edition of Section XI Utilized for Repairs or Replacements:** 1977 Edition, S'78 Addenda, Code Cases: None

6. **Identification of Components Repaired or Replaced:**

Name of Component	Name of Manufacturer	Manufacturer Serial No.	National Board No.	Other Identification	Year Built	Repaired, Replaced, or Replacement	ASME Code Stamped Yes/No
Mechanical Snubber PSA 10-6	Pacific Scientific	15253	N/A	S1-05-6002-H-024	---	Replaced	---
Mechanical Snubber PSA 10-6	Pacific Scientific	390	N/A	RSO 4190-84	N/A	Replacement	No

7. **Work Description:**

The mechanical snubber was replaced as a preventative maintenance action. The replacement snubber was verified as meeting the requirements of the original construction code, as documented in code reconciliation CR-90-002. Prior to installation, the snubber was functionally tested and visually inspected (VT-4). After installation, the support assembly was visually inspected (VT-3).

Reference: NCR 90110026

8. **Tests Conducted:** System Leakage [ ] System Functional [ ] System Inservice [ ] Hydrostatic [ ] Pneumatic [ ] Other [X] VT-4 & VT-3
   Pressure: N/A psig Temp: N/A

FORM NIS-2 (back)

9. Remarks: None

(Applicable Manufacturer's Data Reports to be attached)

CERTIFICATE OF COMPLIANCE

We certify that the statements made in this report are correct and this replacement (repair or replacement) conforms to the rules of the ASME Code, Section XI.

Signed [signature] (Owner or Owner's Designee) Supvg. ASME Codes Engineer (Title) 13 Feb (Date) 19 91

CERTIFICATE OF INSPECTION

I, the undersigned holding a valid commission issued by the National Board of Boiler and Pressure Vessel Inspectors and the State or Province of California, employed by Arkwright Mutual Insurance Company (Factory Mutual System) of Norwood, Massachusetts have inspected the components described in this Owner's Report during the period from 10/23/90 to 2/15/91 and state that to the best of my knowledge and belief, this repair or replacement has been performed in accordance with Section XI of the ASME Code. By signing this certificate, neither the Inspector nor his employer makes any warranty, expressed or implied, concerning the repair or replacement in this Report. Furthermore, neither the Inspector nor his employer shall be liable in any manner for any personal injury or property damage or a loss of any kind arising from or connected with this inspection.

[signature] Commissions 1862 California
Inspector's Signature (State or Province, National Board)

Date February 15, 19 91

Note: Supplemental sheets in the form of lists, sketches, or drawings may be used provided (1) size is 8-1/2 in. x 11 in., (2) information in Items 1 through 4 on this data report is included on each sheet, and (3) each sheet is numbered and the number of sheets is recorded at the top of this form.

NIS-2
OWNER'S REPORT OF REPAIR OR REPLACEMENT

As Required by the Provisions of ASME Code Section XI

Sheet 1 of 1

1. Owner: Southern California Edison Company
2244 Walnut Grove Ave., Rosemead, CA 91770

ASME MO: 90101817

Unit: 1

2. Plant: San Onofre Nuclear Generating Station
P.O. Box 128, San Clemente, CA 92674-0128

RS: GEN-004, Rev.0

3. Work Performed by: Southern California Edison

P&ID: 5178205

4. System Identification: Safety Injection

5. (a) Applicable Construction Code: ANSI B31.1, 1980 Edition, Code Classified XI-2, Code Cases: None

(b) Applicable Edition of Section XI Utilized for Repairs or Replacements: 1977 Edition, S'78 Addenda, Code Cases: None

6. Identification of Components Repaired or Replaced:

Name of Component	Name of Manufacturer	Manufacturer Serial No.	National Board No.	Other Identification	Year Built	Repaired, Replaced, or Replacement	ASME Code Stamped Yes/No
Mechanical Snubber PSA 10-6	Pacific Snubber	16854	N/A	S1-05-6004-H-012	N/A	---	No
Load Stud (1)	Republic Steel	N-2618C Ht. 8654092	N/A	RSO 0237-86 SA-564, Gr 630	N/A	Replacement	No

7. Work Description:

The load stud was damaged while removing the snubber to perform a functional test. The replacement load stud was verified as meeting the requirements of the original construction code. A VT-1 was performed on the load stud. The snubber was functionally tested and visually inspected (VT-4). After installation the support assembly was visually inspected (VT-3).

8. Tests Conducted: System Leakage [ ] System Functional [ ] System Inservice [ ] Hydrostatic [ ] Pneumatic [ ] Other [ ]
Pressure: N/A psig Temp: N/A

FORM NIS-2 (back)

9. Remarks: None

(Applicable Manufacturer's Data Reports to be attached)

CERTIFICATE OF COMPLIANCE

We certify that the statements made in this report are correct and this replacement (repair or replacement) conforms to the rules of the ASME Code, Section XI.

Signed [signature] (Owner or Owner's Designee) Supvg. ASME Codes Engineer (Title) 19 March 1991 (Date)

CERTIFICATE OF INSPECTION

I, the undersigned holding a valid commission issued by the National Board of Boiler and Pressure Vessel Inspectors and the State or Province of California, employed by Arkwright Mutual Insurance Company (Factory Mutual System) of Norwood, Massachusetts have inspected the components described in this Owner's Report during the period from 10/26/90 to 03/20/91 and state that to the best of my knowledge and belief, this repair or replacement has been performed in accordance with Section XI of the ASME Code. By signing this certificate, neither the Inspector nor his employer makes any warranty, expressed or implied, concerning the repair or replacement in this Report. Furthermore, neither the Inspector nor his employer shall be liable in any manner for any personal injury or property damage or a loss of any kind arising from or connected with this inspection.

[signature] Commissions 1864 California
Inspector's Signature (State or Province, National Board)

Date March 20 1991

Note: Supplemental sheets in the form of lists, sketches, or drawings may be used provided (1) size is 8-1/2 in. x 11 in., (2) information in Items 1 through 4 on this data report is included on each sheet, and (3) each sheet is numbered and the number of sheets is recorded at the top of this form.

NIS-2
OWNER'S REPORT OF REPAIR OR REPLACEMENT

As Required by the Provisions of ASME Code Section XI

1. Owner: Southern California Edison Company
   2244 Walnut Grove Ave., Rosemead, CA 91770

ASME MO: 90101818

Unit: 1

2. Plant: San Onofre Nuclear Generating Station
   P.O. Box 128, San Clemente, CA 92674-0128

RS: GEN-004

3. Work Performed by: Southern California Edison

P&ID: 5178205

4. System Identification: Feedwater

5. (a) Applicable Construction Code: ANSI B31.1, 1980 Edition, Code Classified XI-2, Code Cases: None

   (b) Applicable Edition of Section XI Utilized for Repairs or Replacements: 1977 Edition, S'78 Addenda, Code Cases: None

6. Identification of Components Repaired or Replaced:

Name of Component	Name of Manufacturer	Manufacturer Serial No.	National Board No.	Other Identification	Year Built	Repaired, Replaced, or Replacement	ASME Code Stamped Yes/No
Mechanical Snubber PSA 10-6	Pacific Scientific	2255	N/A	S1-06-0015-H-011	N/A	---	No
Load Stud (1)	Republic Steel	N-2518C Ht. 8654092	N/A	RSO 0237-86 SA-564, Gr 630 Mat. Spec. 17-4SH	N/A	Replacement	No

7. Work Description:

The load stud was damaged while removing the snubber to perform a functional test. The replacement load stud was verified as meeting the requirements of the original construction code. A VT-1 was performed on the load stud. The snubber was functionally tested and visually inspected (VT-4). After installation the support assembly was visually inspected (VT-3).

8. Tests Conducted: System Leakage [ ] System Functional [ ] System Inservice [ ] Hydrostatic [ ] Pneumatic [ ] Other [ ]
   Pressure: N/A psig Temp: N/A

FORM NIS-2 (back)

9. Remarks: None

(Applicable Manufacturer's Data Reports to be attached)

CERTIFICATE OF COMPLIANCE

We certify that the statements made in this report are correct and this replacement (repair or replacement) conforms to the rules of the ASME Code, Section XI.

Signed [signature] (Owner or Owner's Designee) Supvg. ASME Codes Engineer (Title) 15 March 1991 (Date)

CERTIFICATE OF INSPECTION

I, the undersigned holding a valid commission issued by the National Board of Boiler and Pressure Vessel Inspectors and the State or Province of California, employed by Arkwright Mutual Insurance Company (Factory Mutual System) of Norwood, Massachusetts have inspected the components described in this Owner's Report during the period from 10/29/90 to 3/16/91 and state that to the best of my knowledge and belief, this repair or replacement has been performed in accordance with Section XI of the ASME Code. By signing this certificate, neither the Inspector nor his employer makes any warranty, expressed or implied, concerning the repair or replacement in this Report. Furthermore, neither the Inspector nor his employer shall be liable in any manner for any personal injury or property damage or a loss of any kind arising from or connected with this inspection.

[signature] Commissions 1864 California
Inspector's Signature (State or Province, National Board)

Date March 16 1991

Note: Supplemental sheets in the form of lists, sketches, or drawings may be used provided (1) size is 8-1/2 in. x 11 in., (2) information in Items 1 through 4 on this data report is included on each sheet, and (3) each sheet is numbered and the number of sheets is recorded at the top of this form.

NIS-2
OWNER'S REPORT OF REPAIR OR REPLACEMENT

As Required by the Provisions of ASME Code Section XI

Sheet 1 of 1

1. Owner: Southern California Edison Company
2244 Walnut Grove Ave., Rosemead, CA 91770

ASME MO: 90101807

Unit: 1

2. Plant: San Onofre Nuclear Generating Station
P.O. Box 128, San Clemente, CA 92674-0128

RS: GEN-004

3. Work Performed by: Southern California Edison

P&ID: 5178205

4. System Identification: Feedwater

5. (a) Applicable Construction Code: ASA B31.1, 1955 Edition, Code Classified XI-2, Code Cases: None

(b) Applicable Edition of Section XI Utilized for Repairs or Replacements: 1977 Edition, S'78 Addenda, Code Cases: None

6. Identification of Components Repaired or Replaced:

Name of Component	Name of Manufacturer	Manufacturer Serial No.	National Board No.	Other Identification	Year Built	Repaired, Replaced, or Replacement	ASME Code Stamped Yes/No
Mechanical Snubber PSA 10-6	Pacific Scientific	14960	N/A	S1-06-0317-H-016	---	Replaced	---
Mechanical Snubber PSA 10-6	Pacific Scientific	15270	N/A	RSO 2-P-358-84	1983	Replacement	No

7. Work Description:

The mechanical snubber was replaced as a result of failing Technical Specification 4.14.C functional testing. The replacement was verified as meeting the requirements of the original construction code, as documented on code reconciliation CR-90-002. Prior to installation the snubber was functionally tested and visually inspected (VT-4). After installation the support assembly was visually inspected (VT-3).

Reference: NCR 90100042

8. Tests Conducted: System Leakage [ ] System Functional [ ] System Inservice [ ] Hydrostatic [ ] Pneumatic [ ] Other [X] VT-4 & VT-3
Pressure: N/A psig Temp: N/A

FORM NIS-2 (back)

9. Remarks: None

(Applicable Manufacturer's Data Reports to be attached)

CERTIFICATE OF COMPLIANCE

We certify that the statements made in this report are correct and this replacement (repair or replacement) conforms to the rules of the ASME Code, Section XI.

Signed [signature] (Owner or Owner's Designee) Supvg. ASME Codes Engineer (Title) 21 Feb (Date) 1991

CERTIFICATE OF INSPECTION

I, the undersigned holding a valid commission issued by the National Board of Boiler and Pressure Vessel Inspectors and the State or Province of California, employed by Arkwright Mutual Insurance Company (Factory Mutual System) of Norwood, Massachusetts have inspected the components described in this Owner's Report during the period from 10/24/90 to 2/15/91 and state that to the best of my knowledge and belief, this repair or replacement has been performed in accordance with Section XI of the ASME Code. By signing this certificate, neither the Inspector nor his employer makes any warranty, expressed or implied, concerning the repair or replacement in this Report. Furthermore, neither the Inspector nor his employer shall be liable in any manner for any personal injury or property damage or a loss of any kind arising from or connected with this inspection.

[signature] Commissions 1862 California —
Inspector's Signature (State or Province, National Board)

Date February 15, 1991

Note: Supplemental sheets in the form of lists, sketches, or drawings may be used provided (1) size is 8-1/2 in. x 11 in., (2) information in Items 1 through 4 on this data report is included on each sheet, and (3) each sheet is numbered and the number of sheets is recorded at the top of this form.

NIS-2
OWNER'S REPORT OF REPAIR OR REPLACEMENT

As Required by the Provisions of ASME Code Section XI

1. **Owner:** Southern California Edison Company
   2244 Walnut Grove Ave., Rosemead, CA 91770

   ASME MO: 90101809

   Unit: 1

2. **Plant:** San Onofre Nuclear Generating Station
   P.O. Box 128, San Clemente, CA 92674-0128

   RS: GEN-004

3. **Work Performed by:** Southern California Edison

   P&ID: 5178205

4. **System Identification:** Feedwater

5. (a) **Applicable Construction Code:** ASA B31.1, 1955 Edition, Code Classified XI-2, Code Cases: None

   (b) **Applicable Edition of Section XI Utilized for Repairs or Replacements:** 1977 Edition, S'78 Addenda, Code Cases: None

6. **Identification of Components Repaired or Replaced:**

Name of Component	Name of Manufacturer	Manufacturer Serial No.	National Board No.	Other Identification	Year Built	Repaired, Replaced, or Replacement	ASME Code Stamped Yes/No
Mechanical Snubber PSA 10-6	Pacific Scientific	15256	N/A	S1-06-0317-H-017	---	Replaced	---
Mechanical Snubber PSA 10-6	Pacific Scientific	11594	N/A	RIP-F-22-83 Code Case 1644-6	1981	Replacement	Yes

7. **Work Description:**

   The mechanical snubber was replaced as a result of failing Technical Specification 4.14.C functional testing. The replacement was verified as meeting the requirements of the original construction code, as documented in code reconciliation CR-90-002. Prior to installation, the snubber was functionally tested and visually inspected (VT-4). After installation, the support assembly was visually inspected (VT-3).

   Reference: NCR 90100063

8. **Tests Conducted:** System Leakage [ ] System Functional [ ] System Inservice [ ] Hydrostatic [ ] Pneumatic [ ] Other [X] VT-4 & VT-3
   Pressure: N/A psig Temp: N/A

FORM NIS-2 (back)

9. Remarks: None

(Applicable Manufacturer's Data Reports to be attached)

CERTIFICATE OF COMPLIANCE

We certify that the statements made in this report are correct and this replacement (repair or replacement) conforms to the rules of the ASME Code, Section XI.

Signed [signature] (Owner or Owner's Designee) Supvg. ASME Codes Engineer (Title) 13 Feb (Date) 1991

CERTIFICATE OF INSPECTION

I, the undersigned holding a valid commission issued by the National Board of Boiler and Pressure Vessel Inspectors and the State or Province of California, employed by Arkwright Mutual Insurance Company (Factory Mutual System) of Norwood, Massachusetts have inspected the components described in this Owner's Report during the period from 10/26/90 to 2/15/90 and state that to the best of my knowledge and belief, this repair or replacement has been performed in accordance with Section XI of the ASME Code. By signing this certificate, neither the Inspector nor his employer makes any warranty, expressed or implied, concerning the repair or replacement in this Report. Furthermore, neither the Inspector nor his employer shall be liable in any manner for any personal injury or property damage or a loss of any kind arising from or connected with this inspection.

[signature] Commissions 1862 California
Inspector's Signature (State or Province, National Board)

Date February 15, 1991

Note: Supplemental sheets in the form of lists, sketches, or drawings may be used provided (1) size is 8-1/2 in. x 11 in., (2) information in Items 1 through 4 on this data report is included on each sheet, and (3) each sheet is numbered and the number of sheets is recorded at the top of this form.

NIS-2

OWNER'S REPORT OF REPAIR OR REPLACEMENT

As Required by the Provisions of ASME Code Section XI

Sheet 1 of 1

1. Owner: Southern California Edison Company
2244 Walnut Grove Ave., Rosemead, CA 91770

ASME MO: 91010509

Unit: 1

2. Plant: San Onofre Nuclear Generating Station
P.O. Box 128, San Clemente, CA 92674-0128

RS: GEN-004, 031-91

3. Work Performed by: Southern California Edison

P&ID: 5178115 (G-4)

4. System Identification: Safety Injection

5. (a) Applicable Construction Code: ASA B31.1, 1955 Edition, Code Classified XI-2, Code Cases: None

(b) Applicable Edition of Section XI Utilized for Repairs or Replacements: 1977 Edition, S'78 Addenda, Code Cases: None

6. Identification of Components Repaired or Replaced:

Name of Component	Name of Manufacturer	Manufacturer Serial No.	National Board No.	Other Identification	Year Built	Repaired, Replaced, or Replacement	ASME Code Stamped Yes/No
Mechanical Snubber PSA 10	Pacific Scientific	569	N/A	S1-06-6003-H-007	N/A	---	No
Bearing Assembly	Pacific Scientific	Part# 1801483-01	N/A	RSO 1303-85	N/A	Replacement	No

7. Work Description:

Upon disassembly, the bearing assembly was found damaged and required replacement. The replacement bearing assembly was verified to be in compliance with the original construction code requirements. Prior to installation the snubber was functionally tested and visually inspected (VT-4). After installation the support assembly was visually inspected (VT-3).

8. Tests Conducted: System Leakage [ ] System Functional [ ] System Inservice [ ] Hydrostatic [ ] Pneumatic [ ] Other [X] VT-4 & VT-3
Pressure: N/A psig Temp: N/A

FORM NIS-2 (back)

9. **Remarks:** None

(Applicable Manufacturer's Data Reports to be attached)

CERTIFICATE OF COMPLIANCE

We certify that the statements made in this report are correct and this replacement (repair or replacement) conforms to the rules of the ASME Code, Section XI.

Signed [signature] (Owner or Owner's Designee) Supvg. ASME Codes Engineer (Title) 4/3 (Date) 19 91

CERTIFICATE OF INSPECTION

I, the undersigned holding a valid commission issued by the National Board of Boiler and Pressure Vessel Inspectors and the State or Province of California, employed by Arkwright Mutual Insurance Company (Factory Mutual System) of Norwood, Massachusetts have inspected the components described in this Owner's Report during the period from 2/15/91 to 4/4/91 and state that to the best of my knowledge and belief, this repair or replacement has been performed in accordance with Section XI of the ASME Code. By signing this certificate, neither the Inspector nor his employer makes any warranty, expressed or implied, concerning the repair or replacement in this Report. Furthermore, neither the Inspector nor his employer shall be liable in any manner for any personal injury or property damage or a loss of any kind arising from or connected with this inspection.

[signature] Commissions 1862 California
Inspector's Signature (State or Province, National Board)

Date April 4, 1991

Note: Supplemental sheets in the form of lists, sketches, or drawings may be used provided (1) size is 8-1/2 in. x 11 in., (2) information in Items 1 through 4 on this data report is included on each sheet, and (3) each sheet is numbered and the number of sheets is recorded at the top of this form.

NIS-2
OWNER'S REPORT OF REPAIR OR REPLACEMENT

As Required by the Provisions of ASME Code Section XI

1. **Owner:** Southern California Edison Company
   2244 Walnut Grove Ave., Rosemead, CA 91770

   ASME MO: 90102663

   Unit: 1

2. **Plant:** San Onofre Nuclear Generating Station
   P.O. Box 128, San Clemente, CA 92674-0128

   RS: GEN-004

3. **Work Performed by:** Southern California Edison

   P&ID: 5178115

4. **System Identification:** Safety Injection

5. (a) **Applicable Construction Code:** ASA B31.1, 1955 Edition, Code Classified XI-2, Code Cases: None

   (b) **Applicable Edition of Section XI Utilized for Repairs or Replacements:** 1977 Edition, S'78 Addenda, Code Cases: None

6. **Identification of Components Repaired or Replaced:**

Name of Component	Name of Manufacturer	Manufacturer Serial No.	National Board No.	Other Identification	Year Built	Repaired, Replaced, or Replacement	ASME Code Stamped Yes/No
Mechanical Snubber PSA 10-6	Pacific Scientific	16888	N/A	S1-06-6003-H-008	---	---	---
Load Pin	Pacific Scientific	Ht. 8652399	N/A	RSO 3406-90 SA-564, Gr 630	1990	Replacement	No

7. **Work Description:**

   The mechanical snubber load pin was replaced. The replacement was verified as meeting the requirements of the original construction code as documented on code reconciliation CR-90-003. A satisfactory VT-1 was performed on the load pin. After installation the support assembly was visually inspected (VT-3).

8. **Tests Conducted:** System Leakage [ ] System Functional [ ] System Inservice [ ] Hydrostatic [ ] Pneumatic [ ] Other [X] VT-3
   Pressure: N/A psig Temp: N/A

FORM NIS-2 (back)

9. Remarks: None

(Applicable Manufacturer's Data Reports to be attached)

CERTIFICATE OF COMPLIANCE

We certify that the statements made in this report are correct and this replacement (repair or replacement) conforms to the rules of the ASME Code, Section XI.

Signed [signature] (Owner or Owner's Designee) Supvg. ASME Codes Engineer (Title) 13 Feb (Date) 1991

CERTIFICATE OF INSPECTION

I, the undersigned holding a valid commission issued by the National Board of Boiler and Pressure Vessel Inspectors and the State or Province of California, employed by Arkwright Mutual Insurance Company (Factory Mutual System) of Norwood, Massachusetts have inspected the components described in this Owner's Report during the period from 12/18/90 to 2/14/91 and state that to the best of my knowledge and belief, this repair or replacement has been performed in accordance with Section XI of the ASME Code. By signing this certificate, neither the Inspector nor his employer makes any warranty, expressed or implied, concerning the repair or replacement in this Report. Furthermore, neither the Inspector nor his employer shall be liable in any manner for any personal injury or property damage or a loss of any kind arising from or connected with this inspection.

[signature] Commissions 1864 California
Inspector's Signature (State or Province, National Board)

Date Feb 14 1991

Note: Supplemental sheets in the form of lists, sketches, or drawings may be used provided (1) size is 8-1/2 in. x 11 in., (2) information in Items 1 through 4 on this data report is included on each sheet, and (3) each sheet is numbered and the number of sheets is recorded at the top of this form.

NIS-2

OWNER'S REPORT OF REPAIR OR REPLACEMENT

As Required by the Provisions of ASME Code Section XI

1. Owner: Southern California Edison Company
2244 Walnut Grove Ave.
Rosemead, CA 91770

Traveler: S01-90-001

Unit: 1

2. Plant: San Onofre Nuclear Generating Station
P. O. Box 128, San Clemente, CA 92672

MMP: 1-3548.01SN

3. Work Performed by: Bechtel Construction Co.
P. O. Box 450
San Clemente, CA 92672

CWO: 90010525000
90010545000

4. System Identification: Volume Control & Charging System (VCC) P&ID: 5178135

5. (a) Applicable Construction Code: ASA B31.1, 1955 Ed. for piping, Code Classified: XI-2
ASA B16.5, 1957 Ed. for valves Code Class: XI-2

(b) Applicable Edition of Section XI Utilized for Repairs or Replacements:
1977 Edition thru S'78 Addenda, Code Cases: N/A

6. Identification of Components Repaired or Replaced:

Name Component	Name of Manufacturer	Manufacturer Serial No.	National Board No.	Other Identification	Year Built	Repaired Replaced, or Replacement	ASME Code Stamped Yes/No
2" pipe Sch. 160	TI Stainless Tubes Ltd.	HT #SU190	N/A	Item 2 RSO #1540-90	N/A	Replacement	NO
2" elbow	Alloy Stainless	HT #SA1	N/A	Item 3 RSO #1540-90	N/A	Replacement	NO
½" pipe Sch. 160	Sandvik Steel Co.	HT #462043	N/A	Item 6 & 7 RSO #1919-90	N/A	Replacement	NO
½" pipe Sch. 160	Sandvik Steel Co.	HT #474744	N/A	Item 11 RSO #3298-89	N/A	Replacement	NO
½" globe valve	Kerotest Mfg. Corp.	CAR27-17	N/A	Item 8 RSO #1356-89	1989	Replacement	YES
½" globe valve	Kerotest Mfg. Corp.	CAR27-20	N/A	Item 9 RSO #1356-89	1989	Replacement	YES
2" Venturi Assembly	Permutit Co.	N-5493	N/A	Item 1 RSO #3298-89 FE-1112	N/A	Replacement	No

7. Work Description:

MMP 1-3548.01SN Replaces exsisting inline flow element/transmitter (FIT-1112) with new venturi (FE-1112). Fabricate welds A, SA, SB, SC, SD, SE, SF, SG, SH, SI. Perform hydrotest.

8. Tests Conducted: System Leakage [ ] System Functional [ ]
System Inservice [ ] Hydrostatic [✓] Pneumatic [ ] Other [ ]
Pressure: 3600 psig Temp: AMB°F

FORM NIS-2 (back)

9. Remarks:

Documentation for items listed in Block 6 are available onsite.
(Applicable Manufacturer's Data Reports to be attached)

CERTIFICATE OF COMPLIANCE

We certify that the statements made in this report are correct and this REPLACEMENT conforms to the rules of the ASME Code, Section XI
(Repair or Replacement)

Signed [illegible] BC/PFE (acting) Nov 14, 1990
~~(Owner or~~ Owner's Designee) Title (Date)

CERTIFICATE OF INSPECTION

I, the undersigned holding a valid commission issued by the National Board of Boiler and Pressure Vessel Inspectors and the State or Province of California employed by *Arkwright Mutual Insurance Company of Norwood, Massachusetts have inspected the components described in this Owner's Report during the period from 7/5/90 to 11/16/90 and state that to the best of my knowledge and belief, this repair or replacement has been performed in accordance with Section XI of the ASME Code. By signing this certificate, neither the Inspector nor his employer makes any warranty, expressed or implied, concerning the repair or replacement in this Report. Furthermore, neither the Inspector nor his employer shall be liable in any manner for any personal injury or property damage or a loss of any kind arising from or connected with this inspection. *Factory Mutual System

[illegible] Commissions CA 1864
Inspector's Signature (State or Province, National Board

Date November 16, 1990

Note: Supplemental sheets in form of lists, sketches, or drawings may be used provided (1) size is 8-1/2 in. x 11 in., (2) information in Items 1 through 4 on this data report is included on each sheet is recorded at the top of this form.

NIS-2
OWNER'S REPORT OF REPAIR OR REPLACEMENT

As Required by the Provisions of ASME Code Section XI

Sheet 1 of 1

ASME MO: 90013010

Unit: 1

RS: 264-90

P&ID: 5178221 (E-3)

1. Owner: Southern California Edison Company
   2244 Walnut Grove Ave., Rosemead, CA 91770

2. Plant: San Onofre Nuclear Generating Station
   P.O. Box 128, San Clemente, CA 92674-0128

3. Work Performed by: Southern California Edison

4. System Identification: Auxiliary Feedwater

5. (a) Applicable Construction Code: BSO-421, Code Classified XI-2, Code Cases: None

   (b) Applicable Edition of Section XI Utilized for Repairs or Replacements: 1977 Edition, S'78 Addenda, Code Cases: None

6. Identification of Components Repaired or Replaced:

Name of Component	Name of Manufacturer	Manufacturer Serial No.	National Board No.	Other Identification	Year Built	Repaired, Replaced, or Replacement	ASME Code Stamped Yes/No
3" Globe Valve	Dresser	61562-1-1	N/A	S1-AFW-CV-113	N/A	---	No
5/8" Bolts (4)	Cardinal	Ht. D2	N/A	RSO 3573-90 SA-193, Gr B7	N/A	Replacement	No
5/8" Nuts (4)	Cardinal	Ht. DG2706	N/A	RSO 1458-90 SA-194, Gr 2H	N/A	Replacement	No
Plug/Stem Assembly 316SS/Stellite HF	Dresser	N/A	N/A	RSO 1154-87	N/A	Replacement	No

7. Work Description:

   The valve plug/stem assembly and bolting required replacement. The replacements were verified to be in compliance with the original construction code requirements.

8. Tests Conducted: System Leakage [ ] System Functional [X] System Inservice [ ] Hydrostatic [ ] Pneumatic [ ] Other [ ]
   Pressure: 800 psig Temp: 525 °F

FORM NIS-2 (back)

9. **Remarks:** None

(Applicable Manufacturer's Data Reports to be attached)

CERTIFICATE OF COMPLIANCE

We certify that the statements made in this report are correct and this replacement (repair or replacement) conforms to the rules of the ASME Code, Section XI.

Signed [signature] (Owner or Owner's Designee) Supvg. ASME Codes Engineer (Title) 23 April 1991 (Date)

CERTIFICATE OF INSPECTION

I, the undersigned holding a valid commission issued by the National Board of Boiler and Pressure Vessel Inspectors and the State or Province of California, employed by Arkwright Mutual Insurance Company (Factory Mutual System) of Norwood, Massachusetts have inspected the components described in this Owner's Report during the period from 8/21/90 to 4/21/91 and state that to the best of my knowledge and belief, this repair or replacement has been performed in accordance with Section XI of the ASME Code. By signing this certificate, neither the Inspector nor his employer makes any warranty, expressed or implied, concerning the repair or replacement in this Report. Furthermore, neither the Inspector nor his employer shall be liable in any manner for any personal injury or property damage or a loss of any kind arising from or connected with this inspection.

Howard D Easton Commissions California 1574
Inspector's Signature (State or Province, National Board)

Date April 24 1991

Note: Supplemental sheets in the form of lists, sketches, or drawings may be used provided (1) size is 8-1/2 in. x 11 in., (2) information in Items 1 through 4 on this data report is included on each sheet, and (3) each sheet is numbered and the number of sheets is recorded at the top of this form.

NIS-2

OWNER'S REPORT OF REPAIR OR REPLACEMENT

As Required by the Provisions of ASME Code Section XI

ASME MO: 89090S52

Unit: 1

RS: 152-90

P&ID: 5178221

1. Owner: Southern California Edison Company
   2244 Walnut Grove Ave., Rosemead, CA 91770

2. Plant: San Onofre Nuclear Generating Station
   P.O. Box 128, San Clemente, CA 92674-0128

3. Work Performed by: Southern California Edison

4. System Identification: Auxiliary Feedwater

5. (a) Applicable Construction Code: SV-2619: ANSI B31.1 and ANSI B16.34, 1977 Edition; AFW-355: ANSI B31.1, 1977 Edition, Code Classified XI-2, Code Cases: None

   (b) Applicable Edition of Section XI Utilized for Repairs or Replacements: 1977 Edition, S'78 Addenda, Code Cases: None

6. Identification of Components Repaired or Replaced:

Name of Component	Name of Manufacturer	Manufacturer Serial No.	National Board No.	Other Identification	Year Built	Repaired, Replaced, or Replacement	ASME Code Stamped Yes/No
½" Solenoid Valve	Target Rock	N/A	N/A	S1-AFW-SV-2619	N/A	Replaced	No
½" Solenoid Valve	Target Rock	11	N/A	RSO 1605-90 Part# 79RR-004	N/A	Replacement	No
½" Globe Valve	Kerotest	N/A	N/A	S1-AFW-355	N/A	Replaced	No
½" Globe Valve	Kerotest	NAV5-24	N/A	RIP-P-499-82 Part# SCN-4PSW-20C	N/A	Replacement	No

7. Work Description:

   The existing valves in plant location S1-AFW-2619 and S1-AFW-355 (bypass) were replaced. The replacement valves were verified to be in compliance with the original construction code requirements. The valves were installed by welding using the existing piping.

   References: NCR SO1-P-7476, WR1-90-296,297

8. Tests Conducted: System Leakage [ ] System Functional [X] System Inservice [ ] Hydrostatic [ ] Pneumatic [ ] Other [ ]
   Pressure: 550 psig Temp: N/A

FORM NIS-2 (back)

9. Remarks: None

(Applicable Manufacturer's Data Reports to be attached)

CERTIFICATE OF COMPLIANCE

We certify that the statements made in this report are correct and this replacement (repair or replacement) conforms to the rules of the ASME Code, Section XI.

Signed [signature] (Owner or Owner's Designee) Supvg. ASME Codes Engineer Title 4/2 (Date) 19 91

CERTIFICATE OF INSPECTION

I, the undersigned holding a valid commission issued by the National Board of Boiler and Pressure Vessel Inspectors and the State or Province of California, employed by Arkwright Mutual Insurance Company (Factory Mutual System) of Norwood, Massachusetts have inspected the components described in this Owner's Report during the period from 7/18/90 to 4/2/91 and state that to the best of my knowledge and belief, this repair or replacement has been performed in accordance with Section XI of the ASME Code. By signing this certificate, neither the Inspector nor his employer makes any warranty, expressed or implied, concerning the repair or replacement in this Report. Furthermore, neither the Inspector nor his employer shall be liable in any manner for any personal injury or property damage or a loss of any kind arising from or connected with this inspection.

[signature] Commissions 1862 California (State or Province, National Board)
Inspector's Signature

Date April 2, 1991

Note: Supplemental sheets in the form of lists, sketches, or drawings may be used provided (1) size is 8-1/2 in. x 11 in., (2) information in Items 1 through 4 on this data report is included on each sheet, and (3) each sheet is numbered and the number of sheets is recorded at the top of this form.

NIS-2
OWNER'S REPORT OF REPAIR OR REPLACEMENT

As Required by the Provisions of ASME Code Section XI

Sheet 1 of 1

1. Owner: Southern California Edison Company
2244 Walnut Grove Ave., Rosemead, CA 91770

ASME MO: 89011456

Unit: 1

2. Plant: San Onofre Nuclear Generating Station
P.O. Box 128, San Clemente, CA 92674-0128

RS: 046-90

3. Work Performed by: Southern California Edison

P&ID: 5178145 (E-6)

4. System Identification: Boric Acid

5. (a) Applicable Construction Code: ANSI B31.1/Westinghouse Specification E-67525, Code Classified XI-2, Code Cases: None

(b) Applicable Edition of Section XI Utilized for Repairs or Replacements: 1977 Edition, S'78 Addenda, Code Cases: None

6. Identification of Components Repaired or Replaced:

Name of Component	Name of Manufacturer	Manufacturer Serial No.	National Board No.	Other Identification	Year Built	Repaired, Replaced, or Replacement	ASME Code Stamped Yes/No
Injection Pump	Crane	78398-1	N/A	S1-BAS-G-948 Model GLD-3K-7515H	Unknown	---	No
Cap Screws (10)	Texas Bolt	Ht. 8651267	N/A	RSO 0110-90	N/A	Replacement	No

7. Work Description:

The boric acid injection pump bolting (cap screws) on the bell portion was mixed with carbon steel and stainless steel and the length of the bolting varied which did not allow for appropriate thread engagement. Replaced the boric acid injection pump cap screws. The replacements were verified to be in compliance with the original construction code (Westinghouse E-Spec 675245).

References: NCR SO1-P-6907, FCN S-4248M

8. Tests Conducted: System Leakage [ ] System Functional [X] System Inservice [ ] Hydrostatic [ ] Pneumatic [ ] Other [ ]
Pressure: 79% Tank Level Temp: N/A

FORM NIS-2 (back)

9. **Remarks:** None

(Applicable Manufacturer's Data Reports to be attached)

CERTIFICATE OF COMPLIANCE

We certify that the statements made in this report are correct and this replacement (repair or replacement) conforms to the rules of the ASME Code, Section XI.

Signed [signature] (Owner or Owner's Designee) Supvg. ASME Codes Engineer (Title) 4/3 (Date) 1991

CERTIFICATE OF INSPECTION

I, the undersigned holding a valid commission issued by the National Board of Boiler and Pressure Vessel Inspectors and the State or Province of California, employed by Arkwright Mutual Insurance Company (Factory Mutual System) of Norwood, Massachusetts have inspected the components described in this Owner's Report during the period from 4/26/90 to 3/21/91 and state that to the best of my knowledge and belief, this repair or replacement has been performed in accordance with Section XI of the ASME Code. By signing this certificate, neither the Inspector nor his employer makes any warranty, expressed or implied, concerning the repair or replacement in this Report. Furthermore, neither the Inspector nor his employer shall be liable in any manner for any personal injury or property damage or a loss of any kind arising from or connected with this inspection.

[signature] Commissions 1574 California
Inspector's Signature (State or Province, National Board)

Date 4/4 1991

Note: Supplemental sheets in the form of lists, sketches, or drawings may be used provided (1) size is 8-1/2 in. x 11 in., (2) information in Items 1 through 4 on this data report is included on each sheet, and (3) each sheet is numbered and the number of sheets is recorded at the top of this form.

NIS-2
OWNER'S REPORT OF REPAIR OR REPLACEMENT

As Required by the Provisions of ASME Code Section XI

Sheet 1 of 1

1. Owner: Southern California Edison Company
2244 Walnut Grove Ave., Rosemead, CA 91770

ASME MO: 90081729

Unit: 1

2. Plant: San Onofre Nuclear Generating Station
P.O. Box 128, San Clemente, CA 92674-0128

RS: 302-90

P&ID: 517S120 (F-6)

3. Work Performed by: Southern California Edison

4. System Identification: Containment Recirculation Spray

5. (a) Applicable Construction Code: ASA B16.5, 1957 Edition, Code Classified XI-2, Code Cases: None

(b) Applicable Edition of Section XI Utilized for Repairs or Replacements: 1977 Edition, S'78 Addenda, Code Cases: None

6. Identification of Components Repaired or Replaced:

Name of Component	Name of Manufacturer	Manufacturer Serial No.	National Board No.	Other Identification	Year Built	Repaired, Replaced, or Replacement	ASME Code Stamped Yes/No
1" Globe Valve	Kerotest	OX11-16	N/A	S1-CRS-337	[	Replaced	Yes
1" Globe Valve	Kerotest	LAD5-13	N/A	RSO 8545-84	1984	Replacement	Yes

7. Work Description:

The existing valve was damaged beyond repair and required replacement. The replacement valve was reconciled and verified as per in compliance with the original construction code requirements and installed by welding. A NDE/PT examination was performed on the weld affected area with no relevant indication noted.

References: WR1-90-627, ME-90-056, 1PT-017-91, 1PT-018-91

8. Tests Conducted: System Leakage [ ] System Functional [X] System Inservice [ ] Hydrostatic [ ] Pneumatic [ ] Other [ ]
Pressure: 220 psig Temp: N/A

FORM NIS-2 (back)

9. **Remarks:** None

(Applicable Manufacturer's Data Reports to be attached)

CERTIFICATE OF COMPLIANCE

We certify that the statements made in this report are correct and this replacement (repair or replacement) conforms to the rules of the ASME Code, Section XI.

Signed [signature] (Owner or Owner's Designee) Supvg. ASME Codes Engineer (Title) 19 March (Date) 1991

CERTIFICATE OF INSPECTION

I, the undersigned holding a valid commission issued by the National Board of Boiler and Pressure Vessel Inspectors and the State or Province of California, employed by Arkwright Mutual Insurance Company (Factory Mutual System) of Norwood, Massachusetts have inspected the components described in this Owner's Report during the period from 09/20/90 to 03/20/91 and state that to the best of my knowledge and belief, this repair or replacement has been performed in accordance with Section XI of the ASME Code. By signing this certificate, neither the Inspector nor his employer makes any warranty, expressed or implied, concerning the repair or replacement in this Report. Furthermore, neither the Inspector nor his employer shall be liable in any manner for any personal injury or property damage or a loss of any kind arising from or connected with this inspection.

[signature] Commissions 1864 California

Inspector's Signature (State or Province, National Board)

Date March 20 1991

Note: Supplemental sheets in the form of lists, sketches, or drawings may be used provided (1) size is 8-1/2 in. x 11 in., (2) information in Items 1 through 4 on this data report is included on each sheet, and (3) each sheet is numbered and the number of sheets is recorded at the top of this form.

NIS-2
OWNER'S REPORT OF REPAIR OR REPLACEMENT

As Required by the Provisions of ASME Code Section XI

Sheet 1 of 1

1. Owner: Southern California Edison Company
2244 Walnut Grove Ave., Rosemead, CA 91770

ASME MO: 89060748

Unit: 1

2. Plant: San Onofre Nuclear Generating Station
P.O. Box 128, San Clemente, CA 92674-0128

RS: 438-89

3. Work Performed by: Southern California Edison

P&ID: 5178120 (E-6)

4. System Identification: Containment Recirculation

5. (a) **Applicable Construction Code:** ASME Section III, Class 2, 1971 Edition, S'73 Addenda, Code Cases: None

(b) **Applicable Edition of Section XI Utilized for Repairs or Replacements:** 1977 Edition, S'78 Addenda, Code Cases: None

6. **Identification of Components Repaired or Replaced:**

Name of Component	Name of Manufacturer	Manufacturer Serial No.	National Board No.	Other Identification	Year Built	Repaired, Replaced, or Replacement	ASME Code Stamped Yes/No
4" Gate Valve	Anchor Darling	E6145-1-3	N/A	S1-CRS-338	N/A	Repaired	Yes

7. **Work Description:**

Packing gland leak-off plug leaked at mechanical connection. The plug was removed, threads cleaned, reinstalled and seal welded. A NDE/PT examination was performed on the weld area with no relevant indication noted.

References: NCR SO1-P-7293, WR1-89-573, 1PT-016-90

8. **Tests Conducted:** System Leakage [ ] System Functional [X] System Inservice [ ] Hydrostatic [ ] Pneumatic [ ] Other [ ]
Pressure: 220 psig Temp: N/A

FORM NIS-2 (back)

9. **Remarks:** None

(Applicable Manufacturer's Data Reports to be attached)

CERTIFICATE OF COMPLIANCE

We certify that the statements made in this report are correct and this repair (repair or replacement) conforms to the rules of the ASME Code, Section XI.

Signed _____ (Owner or Owner's Designee) Supvg. ASME Codes Engineer (Title) 19 March (Date) 1991

CERTIFICATE OF INSPECTION

I, the undersigned holding a valid commission issued by the National Board of Boiler and Pressure Vessel Inspectors and the State or Province of California, employed by Arkwright Mutual Insurance Company (Factory Mutual System) of Norwood, Massachusetts have inspected the components described in this Owner's Report during the period from 08/29/90 to 03/20/91 and state that to the best of my knowledge and belief, this repair or replacement has been performed in accordance with Section XI of the ASME Code. By signing this certificate, neither the Inspector nor his employer makes any warranty, expressed or implied, concerning the repair or replacement in this Report. Furthermore, neither the Inspector nor his employer shall be liable in any manner for any personal injury or property damage or a loss of any kind arising from or connected with this inspection.

_____ Commissions 1864 California
Inspector's Signature (State or Province, National Board)

Date March 20 1991

Note: Supplemental sheets in the form of lists, sketches, or drawings may be used provided (1) size is 8-1/2 in. x 11 in., (2) information in Items 1 through 4 on this data report is included on each sheet, and (3) each sheet is numbered and the number of sheets is recorded at the top of this form.

NIS-2
OWNER'S REPORT OF REPAIR OR REPLACEMENT
As Required by the Provisions of ASME Code Section XI

1. Owner: Southern California Edison Company
   2244 Walnut Grove Ave., Rosemead, CA 91770
   ASME MO: 87040504
   Unit: 1

2. Plant: San Onofre Nuclear Generating Station
   P.O. Box 128, San Clemente, CA 92672
   RS: 011-88

3. Work Performed by: Southern California Edison
   P&ID: 5178120 (C8)

4. System Identification: Containment Spray & Recirculation (CRS)

5. (a) Applicable Construction Code: ASA B31.1, 1955 Edition, Code Classified XI-2

   (b) Applicable Edition of Section XI Utilized for Repairs or Replacements: 1977 Edition, S'78 Addenda, Code Cases: None

6. Identification of Components Repaired or Replaced:

Name of Component	Name of Manufacturer	Manufacturer Serial No.	National Board No.	Other Identification	Year Built	Repaired, Replaced, or Replacement	ASME Code Stamped Yes/No
Globe Valve	Powell Valve	N/A	N/A	S1-CRS-374	N/A	Replaced	No
Globe Valve 2"150#	Powell Valve	Part# 2474 SWE	N/A	ME-89-043 RSO# 2456-89	N/A	Replacement	No
Pipe Nipple 2"sch10s	Sandvik Steel	Ht# 472180	N/A	RSO# 0810-88	N/A	Replacement	No

7. Work Description: Existing valve leaks past the seat area and is damaged beyond repair. Replace valve with qualified in-kind valve and the short sections of pipe on both sides of said valve. The existing valve and the short sections of pipe on either side of valve were removed from the plant system and scrapped. The replacement valve and piping, which were verified as meeting the requirements of the original construction code, were installed in accordance with Weld Record WR1-88-038. A Hydrostatic Pressure Test with a VT-2 inspection was performed, with no leakage noted inside the examination boundary.

8. Tests Conducted: System Leakage [ ] System Functional [ ] System Inservice [ ]
   Hydrostatic [X] Pneumatic [ ] Other [ ]
   Pressure: 187 psig Temp: N/A °F

9. Remarks: None

(Applicable Manufacturer's Data Reports to be attached)

CERTIFICATE OF COMPLIANCE

We certify that the statements made in this report are correct and this REPLACEMENT conforms to the rules of the ASME Code, Section XI.
(repair or replacement)

Signed _____ Supvg. ASME Codes Engineer 22 Feb 1990
(Owner or Owner's Designee) Title (Date)

CERTIFICATE OF INSPECTION

I, the undersigned holding a valid commission issued by the National Board of Boiler and Pressure Vessel Inspectors and the State or Province of California, employed by Arkwright Mutual Insurance Company (Factory Mutual System) of Norwood, Massachusetts have inspected the components described in this Owner's Report during the period from 9/19/89 to 2/20/90 and state that to the best of my knowledge and belief, this repair or replacement has been performed in accordance with Section XI of the ASME Code. By signing this certificate, neither the Inspector nor his employer makes any warranty, expressed or implied, concerning the repair or replacement in this Report. Furthermore, neither the Inspector nor his employer shall be liable in any manner for any personal injury or property damage or a loss of any kind arising from or connected with this inspection.

_____ Commissions 1272 California
Inspector's Signature (State or Province, National Board)

Date 3/2 1990

Note: Supplemental sheets in the form of lists, sketches, or drawings may be used provided (1) size is 8-1/2 in. x 11 in., (2) information in Items 1 through 4 on this data report is included on each sheet, and (3) each sheet is numbered and the number of sheets is recorded at the top of this form.

NIS-2

OWNER'S REPORT OF REPAIR OR REPLACEMENT

As Required by the Provisions of ASME Code Section XI

Sheet 1 of 1

ASME MO: 90091282

1. Owner: Southern California Edison Company
2244 Walnut Grove Ave., Rosemead, CA 91770

Unit: 1

2. Plant: San Onofre Nuclear Generating Station
P.O. Box 128, San Clemente, CA 92674-0128

RS: 325-90

P&ID: 5178120 (E-3)

3. Work Performed by: Southern California Edison

4. System Identification: Containment Recirculation Spray

5. (a) Applicable Construction Code: ASA B31.1, 1955 Edition, Code Classified XI-2, Code Cases: None

(b) Applicable Edition of Section XI Utilized for Repairs or Replacements: 1977 Edition, S'78 Addenda, Code Cases: None

6. Identification of Components Repaired or Replaced:

Name of Component	Name of Manufacturer	Manufacturer Serial No.	National Board No.	Other Identification	Year Built	Repaired, Replaced, or Replacement	ASME Code Stamped Yes/No
6" Piping	N/A	N/A	N/A	S1-CRS-734-6"	N/A	Repaired	No

7. Work Description:

The piping system was disassembled to allow for the removal and reapplication of protective coating to the inside surface. The original piping was reassembled by welding. A PSE/ISI surface examination (MT) was conducted on piping weld greater than 4".

Reference: NCR 90070015, WR1-90-682, WR1-90-683

8. Tests Conducted: System Leakage [ ] System Functional [ ] System Inservice [ ] Hydrostatic [ ] Pneumatic [ ] Other [X]
Pressure: N/A psig Temp: N/A

FORM NIS-2 (back)

9. **Remarks:** This is an open ended system. A flow test (per SO1-I-2.14) was conducted in lieu of a hydrostatic test. [Ref: ASME XI IWC-5222(c)]

(Applicable Manufacturer's Data Reports to be attached)

CERTIFICATE OF COMPLIANCE

We certify that the statements made in this report are correct and this repair (repair or replacement) conforms to the rules of the ASME Code, Section XI.

Signed [signature] (Owner or Owner's Designee) Supvg. ASME Codes Engineer (Title) 4/2 (Date) 1991

CERTIFICATE OF INSPECTION

I, the undersigned holding a valid commission issued by the National Board of Boiler and Pressure Vessel Inspectors and the State or Province of California, employed by Arkwright Mutual Insurance Company (Factory Mutual System) of Norwood, Massachusetts have inspected the components described in this Owner's Report during the period from 9/30/90 to 4/2/91 and state that to the best of my knowledge and belief, this repair or replacement has been performed in accordance with Section XI of the ASME Code. By signing this certificate, neither the Inspector nor his employer makes any warranty, expressed or implied, concerning the repair or replacement in this Report. Furthermore, neither the Inspector nor his employer shall be liable in any manner for any personal injury or property damage or a loss of any kind arising from or connected with this inspection.

[signature] Commissions 1862 California
Inspector's Signature (State or Province, National Board)

Date April 2, 1991

Note: Supplemental sheets in the form of lists, sketches, or drawings may be used provided (1) size is 8-1/2 in. x 11 in., (2) information in Items 1 through 4 on this data report is included on each sheet, and (3) each sheet is numbered and the number of sheets is recorded at the top of this form.

NIS-2
OWNER'S REPORT OF REPAIR OR REPLACEMENT
As Required by the Provisions of ASME Code Section XI

1. Owner: Southern California Edison Company
2244 Walnut Grove Ave.
Rosemead, CA 91770

Traveler: S01-91-010

Unit: 1

2. Plant: San Onofre Nuclear Generating Station
P. O. Box 128, San Clemente, CA 92674-0128

FCN: F-5538M

3. Work Performed by: Bechtel Construction Co.
P. O. Box 450
San Clemente, CA 92674-0128

CWO: 91020270000
91020205000

4. System Identification: (CRS) Containment/Spray/Recir. Sys. P&ID: 5178120

5. (a) Applicable Construction Code: ASA B16.5, 1957 ED. Code Class: XI-2

(b) Applicable Edition of Section XI Utilized for Repairs or Replacements:
1977 Edition, thru S'78 Addenda, Code Cases: N/A

6. Identification of Components Repaired or Replaced:

Name Component	Name of Manufacturer	Manufacturer Serial No.	National Board No.	Other Identification	Year Built	Repaired Replaced, or Replacement	ASME Code Stamped Yes/No
1/2" Plate	Grano Steel Corp.	Heat No. V01003	N/A	RSO# 0147-91	N/A	Replacement	No

7. Work Description:

FCN F-5538M installs a flow direction indicator on valve S1-CRS-CV-517, fabricates welds, TA & TB

8. Tests Conducted: None

FORM NIS-2 (back)

9. Remarks:

Documentation for items listed in Block 6 are available onsite.
(Applicable Manufacturer's Data Reports to be attached)

CERTIFICATE OF COMPLIANCE

We certify that the statements made in this report are correct and this replacement (Repair or Replacement) conforms to the rules of the ASME Code, Section XI

Signed [illegible] FIELD CONST MGR 3/19, 1991
(Owner or Owner's Designee) Title (Date)

CERTIFICATE OF INSPECTION

I, the undersigned holding a valid commission issued by the National Board of Boiler and Pressure Vessel Inspectors and the State or Province of California employed by *Arkwright Mutual Insurance Company of Norwood, Massachusetts have inspected the components described in this Owner's Report during the period from 2/13/91 to 3/19/91 and state that to the best of my knowledge and belief, this repair or replacement has been performed in accordance with Section XI of the ASME Code. By signing this certificate; neither the Inspector nor his employer makes any warranty, expressed or implied, concerning the repair or replacement in this Report. Furthermore, neither the Inspector nor his employer shall be liable in any manner for any personal injury or property damage or a loss of any kind arising from or connected with this inspection. *Factory Mutual System

[illegible] Commissions 1862 CA
Inspector's Signature (State or Province, National Board

Date March 19, 1991

Note: Supplemental sheets in form of lists, sketches, or drawings may be used provided (1) size is 8-1/2 in. x 11 in., (2) information in Items 1 through 4 on this data report included on each sheet is recorded at the top of this form.

NIS-2
OWNER'S REPORT OF REPAIR OR REPLACEMENT
As Required by the Provisions of ASME Code Section XI

1. Owner: Southern California Edison Company
2244 Walnut Grove Ave.
Rosemead, CA 91770

Traveler: S01-91-011

Unit: 1

2. Plant: San Onofre Nuclear Generating Station
P. O. Box 128, San Clemente, CA 92674-0128

FCN: F-5538M

3. Work Performed by: Bechtel Construction Co.
P. O. Box 450
San Clemente, CA 92674-0128

CWO: 91020270000
91020207000

4. System Identification: (CRS) Containment/Spray/Recir. Sys. P&ID: 5178120

5. (a) Applicable Construction Code: ASA B16.5, 1957 ED. Code Class: XI-2

(b) Applicable Edition of Section XI Utilized for Repairs or Replacements:
1977 Edition, thru S'78 Addenda, Code Cases: N/A

6. Identification of Components Repaired or Replaced:

Name Component	Name of Manufacturer	Manufacturer Serial No.	National Board No.	Other Identification	Year Built	Repaired Replaced, or Replacement	ASME Code Stamped Yes/No
1/2" Plate	Grano Steel Corp.	Heat No. V01003	N/A	RSO# 0147-91	N/A	Replacement	No

7. Work Description:

FCN F-5538M installs a flow direction indicator on valve S1-CRS-CV-518, fabricates welds, TC & TD

8. Tests Conducted: None

FORM NIS-2 (back)

9. **Remarks:**

Documentation for items listed in Block 6 are available onsite.
(Applicable Manufacturer's Data Reports to be attached)

CERTIFICATE OF COMPLIANCE

We certify that the statements made in this report are correct and this replacement conforms to the rules of the ASME Code, Section XI
(Repair or Replacement)

Signed W A Macondry FIELD CONST MGR 3/19, 1991
(Owner or Owner's Designee) Title (Date)

CERTIFICATE OF INSPECTION

I, the undersigned holding a valid commission issued by the National Board of Boiler and Pressure Vessel Inspectors and the State or Province of California employed by *Arkwright Mutual Insurance Company of Norwood, Massachusetts have inspected the components described in this Owner's Report during the period from 8/13/91 to 3/19/91 and state that to the best of my knowledge and belief, this repair or replacement has been performed in accordance with Section XI of the ASME Code. By signing this certificate, neither the Inspector nor his employer makes any warranty, expressed or implied, concerning the repair or replacement in this Report. Furthermore, neither the Inspector nor his employer shall be liable in any manner for any personal injury or property damage or a loss of any kind arising from or connected with this inspection. *Factory Mutual System

C E Thompson Commissions 1862 CA
Inspector's Signature (State or Province, National Board

Date March 19, 1991

Note: Supplemental sheets in form of lists, sketches, or drawings may be used provided (1) size is 8-1/2 in. x 11 in., (2) information in Items 1 through 4 on this data report is included on each sheet is recorded at the top of this form.

NIS-2

OWNER'S REPORT OF REPAIR OR REPLACEMENT

As Required by the Provisions of ASME Code Section XI

==========

1. Owner: Southern California Edison Company
2244 Walnut Grove Ave., Rosemead, CA 91770
ASME MO: 89020162
Unit: 1

2. Plant: San Onofre Nuclear Generating Station
P.O. Box 128, San Clemente, CA 92672
RS: 121-89

3. Work Performed by: Southern California Edison
P&ID: 5178120 (B8)

4. System Identification: Containment Recirculation Spray (CRS)

5. (a) Applicable Construction Code: API-650, 1st Ed./ Bechtel Spec. BSO-433
Code Classified: XI-2
(b) Applicable Edition of Section XI Utilized for Repairs or Replacements:
1977 Edition, S'78 Addenda, Code Cases: None

6. Identification of Components Repaired or Replaced:

Name of Component	Name of Manufacturer	Manufacturer Serial No.	National Board No.	Other Identification	Year Built	Repaired, Replaced, or Replacement	ASME Code Stamped Yes/No
Refueling Water Storage Tank	Pittsburgh-Des Moines	3246-D1	N/A	S1-CRS-D-1	N/A	----------	No
Manway Bolting (28)	Nova Machine Products	Ht.# 124025	N/A	RSO# 1009-89	N/A	Replacement	No

7. Work Description: Manway bolting was found not to have enough thread engagement with attaching hex. nuts, which generated NCR # SO1-P-6944. The existing manway bolts were then removed one at a time and scrapped. The replacement bolts, which complied with the requirements of the original construction code, were installed using the existing hex nuts. A System Functional Pressure Test with a VT-2 inspection was performed, with acceptable results.

8. Tests Conducted: System Leakage [ ] System Functional [X] System Inservice [ ]
Hydrostatic [ ] Pneumatic [ ] Other [ ]
Pressure: 15 psig Temp: Amb.°F

FORM NIS-2 (back)

9. Remarks: None

(Applicable Manufacturer's Data Reports to be attached)

CERTIFICATE OF COMPLIANCE

We certify that the statements made in this report are correct and this REPLACEMENT conforms to the rules of the ASME Code, Section XI.
(repair or replacement)

Signed [signature] Supvg. ASME Codes Engineer 23 July 1990
(Owner or Owner's Designee) Title (Date)

CERTIFICATE OF INSPECTION

I, the undersigned holding a valid commission issued by the National Board of Boiler and Pressure Vessel Inspectors and the State or Province of California, employed by Arkwright Mutual Insurance Company (Factory Mutual System) of Norwood, Massachusetts have inspected the components described in this Owner's Report during the period from April 10, 1990 to April 13, 1990 and state that to the best of my knowledge and belief, this repair or replacement has been performed in accordance with Section XI of the ASME Code. By signing this certificate, neither the Inspector nor his employer makes any warranty, expressed or implied, concerning the repair or replacement in this Report. Furthermore, neither the Inspector nor his employer shall be liable in any manner for any personal injury or property damage or a loss of any kind arising from or connected with this inspection.

R. T. Verrett Commissions 1393 California
Inspector's Signature (State or Province, National Board)

Date July 24 1990

Note: Supplemental sheets in the form of lists, sketches, or drawings may be used provided (1) size is 8-1/2 in. x 11 in., (2) information in Items 1 through 4 on this data report is included on each sheet, and (3) each sheet is numbered and the number of sheets is recorded at the top of this form.

NIS-2

OWNER'S REPORT OF REPAIR OR REPLACEMENT

As Required by the Provisions of ASME Code Section XI

1. Owner: Southern California Edison Company
2244 Walnut Grove Ave., Rosemead, CA 91770

ASME MO: 90021085

Unit: 1

2. Plant: San Onofre Nuclear Generating Station
P.O. Box 128, San Clemente, CA 92672

RS: 093-90

3. Work Performed by: Southern California Edison

P&ID: 5178120

4. System Identification: CONTAINMENT SPRAY & RECIRC. SYSTEM

5. (a) Applicable Construction Code: ASA B31.1-1955 Ed. Code Classified XI-2
Code Cases: None
(b) Applicable Edition of Section XI Utilized for Repairs or Replacements:
1977 Edition, S'78 Addenda, Code Cases: None

6. Identification of Components Repaired or Replaced:

Name of Component	Name of Manufacturer	Manufacturer Serial No.	National Board No.	Other Identification	Year Built	Repaired, Replaced, or Replacement	ASME Code Stamped Yes/No
REFUELING WATER FILTER PUMP	WORTHINGTON	A144771	N/A	S1-CRS-G-60	N/A	>>>>>>>>>>>>	NO
INLET FLANGE BOLTING (STUDS)	TEXAS BOLT	JK 16	N/A	RSO 0090-84	N/A	REPLACEMENT	NO
INLET FLANGE BOLTING (NUTS)	TEXAS BOLT	JK 52	N/A	RSO 0090-84	N/A	REPLACEMENT	NO

7. Work Description:
Replacement bolting was verified as meeting the original construction code and material specification (Reference: Material Evaluation ME-90-013 & IDCN AB2631M) The replacement studs were cut to the proper length and installed with the replacement nuts in the inlet flange. A VT-2 examination was performed in conjunction with a system functional pressure test.

8. Tests Conducted: System Leakage [ ] System Functional [X] System Inservice [
Hydrostatic [ ] Pneumatic [ ] Other [ ]
Pressure: 74 psig Temp: N/A °F

FORM NIS-2 (back)

9. Remarks: NONE

(Applicable Manufacturer's Data Reports to be attached)

CERTIFICATE OF COMPLIANCE

We certify that the statements made in this report are correct and this REPLACEMENT conforms to the rules of the ASME Code, Section XI.
(repair or replacement)

Signed [signature] Supvg. ASME Codes Engineer 17 APRIL 19 90
(Owner or Owner's Designee) Title (Date)

CERTIFICATE OF INSPECTION

I, the undersigned holding a valid commission issued by the National Board of Boiler and Pressure Vessel Inspectors and the State or Province of California, employed by Arkwright Mutual Insurance Company (Factory Mutual System) of Norwood, Massachusetts have inspected the components described in this Owner's Report during the period from 2/13/90 to 4/6/90 and state that to the best of my knowledge and belief, this repair or replacement has been performed in accordance with Section XI of the ASME Code. By signing this certificate, neither the Inspector nor his employer makes any warranty, expressed or implied, concerning the repair or replacement in this Report. Furthermore, neither the Inspector nor his employer shall be liable in any manner for any personal injury or property damage or a loss of any kind arising from or connected with this inspection.

[signature] Commissions 1272 California
Inspector's Signature (State or Province, National Board)

Date 4/23 19 90

Note: Supplemental sheets in the form of lists, sketches, or drawings may be used provided (1) size is 8-1/2 in. x 11 in., (2) information in Items 1 through 4 on this data report is included on each sheet, and (3) each sheet is numbered and the number of sheets is recorded at the top of this form.

ASME Section XI Abstract
Owner's Summary of Repair or Replacement

1. Owner: Southern California Edison Company
2244 Walnut Grove Ave.
Rosemead, CA 91770

Traveler: S01-91-004

Unit: 1

2. Plant: San Onofre Nuclear Generating Station
P. O. Box 128, San Clemente, CA 92674-0128

MMP: 1-3643.00SN

3. Work Performed by: Bechtel Construction Co.
P. O. Box 450
San Clemente, CA 92674-0128

CWO: 90122174000
91012301000

4. System Identification: Containment Recirc. Spray (CRS)

P&ID: 5178120

5. Plant Tag No.: See NIS-2

Serial No.: See NIS-2

6. Component: See NIS-2

Name: See NIS-2

Size: 6"ϕ

7. Code: ASA B31.1, 1955 Ed.

Class: XI-2

8. Purpose (Statement of Problem):

MMP 1-3643.00SN replaces existing RO-525 with a new resized orifice plate.

9. Narrative Summary (Brief Description of Work Performed):

1. The appropriate documents were reviewed to verify compliance with the applicable code.
2. A Bench Hydrostatic Test with VT-2 was performed on the orifice plate.
3. Existing orifice plate (S1-CRS-RO-525) was replaced with new resized orifice plate.

10. Material Used: See NIS-2

Prepared by: Lester Taylor

Date 02/04/91

NIS-2

OWNER'S REPORT OF REPAIR OR REPLACEMENT

As Required by the Provisions of ASME Code Section XI

1. Owner: Southern California Edison Company
2244 Walnut Grove Ave.
Rosemead, CA 91770

Traveler: S01-91-004

Unit: 1

2. Plant: San Onofre Nuclear Generating Station
P. O. Box 128, San Clemente, CA 92674-0128

MMP: 1-3643.00SN

3. Work Performed by: Bechtel Construction Co.
P. O. Box 450
San Clemente, CA 92674-0128

CWO: 90122174000
91012301000

4. System Identification: Containment Recirc. Spray (CRS)

P&ID: 5178120

5. (a) Applicable Construction Code: ASA B31.1, 1955 Ed. Code Class XI-2

(b) Applicable Edition of Section XI Utilized for Repairs or Replacements:
1977 Edition, thru S'78 Addenda, Code Cases: N/A

6. Identification of Components Repaired or Replaced:

Name Component	Name of Manufacturer	Manufacturer Serial No.	National Board No.	Other Identification	Year Built	Repaired Replaced, or Replacement	ASME Code Stamped Yes/No
6" x 300# Orif. Plate	Permutit Co.	S/N# N-5581	N/A	Item #1, RSO #0151-91 S1-CRS-RO-525	N/A	Replaced	No

7. Work Description:

MMP 1-3643.00SN removed existing S1-CRS-RO-525 and installed a new resized Restricting Orifice. A Hydrostatic Test with VT-2 was performed prior to installation.

8. Tests Conducted: System Leakage [ ] System Functional [ ]
System Inservice [ ] Hydrostatic [X] Pneumatic [ ] Other [ ]
Pressure: 388 psig Temp: >60°F

FORM NIS-2 (back)

9. **Remarks:**

Documentation for items listed in Block 6 are available onsite.
(Applicable Manufacturer's Data Reports to be attached)

CERTIFICATE OF COMPLIANCE

We certify that the statements made in this report are correct and this replacement conforms to the rules of the ASME Code, Section XI
(Repair or Replacement)

Signed [illegible] Title 2-8, 1991
(Owner or Owner's Designee) (Date)

CERTIFICATE OF INSPECTION

I, the undersigned holding a valid commission issued by the National Board of Boiler and Pressure Vessel Inspectors and the State or Province of California employed by *Arkwright Mutual Insurance Company of Norwood, Massachusetts have inspected the components described in this Owner's Report during the period from 1/25/91 to 2/8/91 and state that to the best of my knowledge and belief, this repair or replacement has been performed in accordance with Section XI of the ASME Code. By signing this certificate, neither the Inspector nor his employer makes any warranty, expressed or implied, concerning the repair or replacement in this Report. Furthermore, neither the Inspector nor his employer shall be liable in any manner for any personal injury or property damage or a loss of any kind arising from or connected with this inspection. *Factory Mutual System

[illegible] Commissions 1862 CA
Inspector's Signature (State or Province, National Board

Date February 8, 1991

Note: Supplemental sheets in form of lists, sketches, or drawings may be used provided (1) size is 8-1/2 in. x 11 in., (2) information in Items 1 through 4 on this data report is included on each sheet is recorded at the top of this form.

ASME Section XI Abstract
Owner's Summary of Repair or Replacement

1. Owner: Southern California Edison Company
2244 Walnut Grove Ave.
Rosemead, CA 91770

Traveler: S01-91-003

Unit: 1

2. Plant: San Onofre Nuclear Generating Station
P. O. Box 128, San Clemente, CA 92674-0128

MMP: 1-3643.00SN

3. Work Performed by: Bechtel Construction Co.
P. O. Box 450
San Clemente, CA 92674-0128

CWO: 90122173000
91012301000

4. System Identification: Containment Recirc. Spray (CRS)

P&ID: 5178120

5. Plant Tag No.: See NIS-2

Serial No.: See NIS-2

6. Component: See NIS-2

Name: See NIS-2

Size: 6"ϕ

7. Code: ASA B31.1, 1955 Ed.

Class: XI-2

8. Purpose (Statement of Problem):

MMP 1-3643.00SN replaces existing RO-526 with a new resized orifice plate.

9. Narrative Summary (Brief Description of Work Performed):

1. The appropriate documents were reviewed to verify compliance with the applicable code.
2. A Bench Hydrostatic Test with VT-2 was performed on the orifice plate.
3. Existing orifice plate (S1-CRS-RO-526) was replaced with new resized orifice plate.

10. Material Used: See NIS-2

Prepared by: Lester Taylor

Date 02/04/91

NIS-2

OWNER'S REPORT OF REPAIR OR REPLACEMENT
As Required by the Provisions of ASME Code Section XI

1. Owner: Southern California Edison Company
2244 Walnut Grove Ave.
Rosemead, CA 91770

Traveler: S01-91-003

Unit: 1

2. Plant: San Onofre Nuclear Generating Station
P. O. Box 128, San Clemente, CA 92674-0128

MMP: 1-3643.00SN

3. Work Performed by: Bechtel Construction Co.
P. O. Box 450
San Clemente, CA 92674-0128

CWO: 90122173000
91012301000

4. System Identification: Containment Recirc. Spray (CRS)

P&ID: 5178120

5. (a) Applicable Construction Code: ASA B31.1, 1955 Ed. Code Class XI-2

(b) Applicable Edition of Section XI Utilized for Repairs or Replacements:
1977 Edition, thru S'78 Addenda, Code Cases: N/A

6. Identification of Components Repaired or Replaced:

Name Component	Name of Manufacturer	Manufacturer Serial No.	National Board No.	Other Identification	Year Built	Repaired Replaced, or Replacement	ASME Code Stamped Yes/No
6" x 300# Orif. Plate	Permutit Co.	S/N# N-5583	N/A	Item #1, RSO #0151-91 S1-CRS-RO-526	N/A	Replaced	No

7. Work Description:

MMP 1-3643.00SN removed existing S1-CRS-RO-526 and installed a new resized Restricting Orifice. A Hydrostatic Test with VT-2 was performed prior to installation.

8. Tests Conducted: System Leakage [ ] System Functional [ ]
System Inservice [ ] Hydrostatic [X] Pneumatic [ ] Other [ ]
Pressure: 388 psig Temp: >60°F

FORM NIS-2 (back)

9. **Remarks:**

Documentation for items listed in Block 6 are available onsite.
(Applicable Manufacturer's Data Reports to be attached)

CERTIFICATE OF COMPLIANCE

We certify that the statements made in this report are correct and this replacement conforms to the rules of the ASME Code, Section XI
(Repair or Replacement)

Signed T E Hamlin (Owner or Owner's Designee) Title 2-8 (Date), 1991

CERTIFICATE OF INSPECTION

I, the undersigned holding a valid commission issued by the National Board of Boiler and Pressure Vessel Inspectors and the State or Province of California employed by *Arkwright Mutual Insurance Company of Norwood, Massachusetts have inspected the components described in this Owner's Report during the period from 1/25/91 to 2/8/91 and state that to the best of my knowledge and belief, this repair or replacement has been performed in accordance with Section XI of the ASME Code. By signing this certificate, neither the Inspector nor his employer makes any warranty, expressed or implied, concerning the repair or replacement in this Report. Furthermore, neither the Inspector nor his employer shall be liable in any manner for any personal injury or property damage or a loss of any kind arising from or connected with this inspection. *Factory Mutual System

C D Thompson Commissions 1862 CA
Inspector's Signature (State or Province, National Board

Date February 8, 1991

Note: Supplemental sheets in form of lists, sketches, or drawings may be used provided (1) size is 8-1/2 in. x 11 in., (2) information in Items 1 through 4 on this data report is included on each sheet is recorded at the top of this form.

NIS-2
OWNER'S REPORT OF REPAIR OR REPLACEMENT

As Required by the Provisions of ASME Code Section XI

1. **Owner:** Southern California Edison Company
   2244 Walnut Grove Ave., Rosemead, CA 91770

   ASME MO: 90010412

   Unit: 1

2. **Plant:** San Onofre Nuclear Generating Station
   P.O. Box 128, San Clemente, CA 92674-0128

   RS: 312-90

3. **Work Performed by:** Southern California Edison

   P&ID: 5178120

4. **System Identification:** Containment Recirculation Spray

5. (a) **Applicable Construction Code:** ASME Section VIII, Westinghouse E-Spec. 675262, Code Classified: XI-2, Code Cases: None

   (b) **Applicable Edition of Section XI Utilized for Repairs or Replacements:** 1977 Edition, S'78 Addenda, Code Cases: None

6. **Identification of Components Repaired or Replaced:**

Name of Component	Name of Manufacturer	Manufacturer Serial No.	National Board No.	Other Identification	Year Built	Repaired, Replaced, or Replacement	ASME Code Stamped Yes/No
Relief Valve	Crosby	48809	N/A	S1-CRS-RV-882	N/A	---	No
Disc	Crosby	Ht. 06936 Part No. 81518-31-0001	N/A	RSO 0924-84	N/A	Replacement	No

7. **Work Description:**

   The relief valve failed the IST bench test. The disc was found to require replacement. The replacement disc was verified to be in compliance with the original construction code. After installation the valve was reset at the required lift pressure. A VT-2 examination was conducted in conjunction with a system functional pressure test with no leakage noted.

   Reference: NCR 90080273

8. **Tests Conducted:** System Leakage [ ] System Functional [X] System Inservice [ ] Hydrostatic [ ] Pneumatic [ ] Other [ ]
   Pressure: 224 psig Temp: N/A

FORM NIS-2 (back)

9. Remarks: None

(Applicable Manufacturer's Data Reports to be attached)

CERTIFICATE OF COMPLIANCE

We certify that the statements made in this report are correct and this replacement (repair or replacement) conforms to the rules of the ASME Code, Section XI.

Signed [signature] (Owner or Owner's Designee) Supvg. ASME Codes Engineer (Title) 4/3 (Date) 1991

CERTIFICATE OF INSPECTION

I, the undersigned holding a valid commission issued by the National Board of Boiler and Pressure Vessel Inspectors and the State or Province of California, employed by Arkwright Mutual Insurance Company (Factory Mutual System) of Norwood, Massachusetts have inspected the components described in this Owner's Report during the period from 9/12/90 to 3/21/91 and state that to the best of my knowledge and belief, this repair or replacement has been performed in accordance with Section XI of the ASME Code. By signing this certificate, neither the Inspector nor his employer makes any warranty, expressed or implied, concerning the repair or replacement in this Report. Furthermore, neither the Inspector nor his employer shall be liable in any manner for any personal injury or property damage or a loss of any kind arising from or connected with this inspection.

Howard D. Foster Commissions 1574 California
Inspector's Signature (State or Province, National Board)

Date April 4 1991

Note: Supplemental sheets in the form of lists, sketches, or drawings may be used provided (1) size is 8-1/2 in. x 11 in., (2) information in Items 1 through 4 on this data report is included on each sheet, and (3) each sheet is numbered and the number of sheets is recorded at the top of this form.

RGB 1-22-91

ASME Section XI Abstract
Owner's Summary of Repair or Replacement

1. Owner: Southern California Edison Company
2244 Walnut Grove Ave.
Rosemead, CA 91770

Traveler: S01-90-032

Unit: 1

2. Plant: San Onofre Nuclear Generating Station
P. O. Box 128, San Clemente, CA 92672

MMP: 1-3582.00SN

3. Work Performed by: Bechtel Construction Co.
P. O. Box 450
San Clemente, CA 92672

CWO: 90081311000

4. System Identification: Containment Recirculation Spray (CRS) P&ID: 5178120

5. Plant Tag No.: S1-CRS-CV-517 Serial No.: 5099

6. Component: Flow Control Ball Valve Name: Gulf-Western Size: 6"

7. Code: ASA-B16.5, 1957 ED. Class: X1-2

8. Purpose (Statement of Problem): MMP 1-3582.00SN. To enhance the reliability of the valve operator.

Associated Drawings: 1810-AA737-D0006
FIDCN M-7539

9. Narrative Summary (Brief Description of Work Performed):

1. The appropriate documents were reviewed to verify compliance with the applicable construction code.

2. Valve actuator mounting plate and valve bonnet were drilled and doweled.

10. Material Used: N/A. Material used is non integral attachment/non code.

Prepared by: John Breza Date 12/26/90

NIS-2
OWNER'S REPORT OF REPAIR OR REPLACEMENT
As Required by the Provisions of ASME Code Section XI

1. Owner: Southern California Edison Company
2244 Walnut Grove Ave.
Rosemead, CA 91770

Traveler: S01-90-032

Unit: 1

2. Plant: San Onofre Nuclear Generating Station
P. O. Box 128, San Clemente, CA 92672

MMP: 1-3582.00SN

CWO: 90081311000

3. Work Performed by: Bechtel Construction Co.
P. O. Box 450
San Clemente, CA 92672

4. System Identification: Containment Recirculation Spray (CRS) P&ID: 5178120

5. (a) Applicable Construction Code: Valve (ASA B16.5, 1957 ED.) Code Classified X1-2

(b) Applicable Edition of Section XI Utilized for Repairs or Replacements:
1977 Edition thru S'78, Addenda, Code Cases: N/A

6. Identification of Components Repaired or Replaced:

Name Component	Name of Manufacturer	Manufacturer Serial No.	National Board No.	Other Identification	Year Built	Repaired Replaced, or Replacement	ASME Code Stamped Yes/No
6" Flow Control Ball Valve	Gulf-Western	5099	N/A	S1-CRS-CV-517	N/A	Replace	No

7. Work Description: MMP 1-3582.00SN. Valve Actuator Mounting Plate and Valve Bonnet were drilled and doweled

8. Tests Conducted: System Leakage None

FORM NIS-2 (back)

9. Remarks:

Documentation for items listed in Block 6 are available onsite.
(Applicable Manufacturer's Data Reports to be attached)

CERTIFICATE OF COMPLIANCE

We certify that the statements made in this report are correct and this replacement conforms to the rules of the ASME Code, Section XI
(Repair or Replacement)

Signed [signature] FLD. CONST. MGR Dec. 27, 1990
(Owner or Owner's Designee) Title (Date)

CERTIFICATE OF INSPECTION

I, the undersigned holding a valid commission issued by the National Board of Boiler and Pressure Vessel Inspectors and the State or Province of California employed by *Arkwright Mutual Insurance Company of Norwood, Massachusetts have inspected the components described in this Owner's Report during the period from 9/22/90 to 1/2/91 and state that to the best of my knowledge and belief, this repair or replacement has been performed in accordance with Section XI of the ASME Code. By signing this certificate, neither the Inspector nor his employer makes any warranty, expressed or implied, concerning the repair or replacement in this Report. Furthermore, neither the Inspector nor his employer shall be liable in any manner for any personal injury or property damage or a loss of any kind arising from or connected with this inspection. *Factory Mutual System

[signature] Commissions 1862 CA
Inspector's Signature (State or Province, National Board

Date January 2, 1991

Note: Supplemental sheets in form of lists, sketches, or drawings may be used provided (1) size is 8-1/2 in. x 11 in., (2) information in Items 1 through 4 on this data report is included on each sheet is recorded at the top of this form.

RBS 1-22-9

ASME Section XI Abstract
Owner's Summary of Repair or Replacement

==========

1. Owner: Southern California Edison Company
2244 Walnut Grove Ave.
Rosemead, CA 91770

Traveler: S01-90-033

Unit: 1

2. Plant: San Onofre Nuclear Generating Station
P. O. Box 128, San Clemente, CA 92672

MMP 1-3582.00SN

3. Work Performed by: Bechtel Construction Co.
P. O. Box 450
San Clemente, CA 92672

CWO: 90081312000

4. System Identification: Containment Recirculation Spray (CRS) P&ID: 5178120

5. Plant Tag No.: S1-CRS-CV-518 Serial No.: 5178120

6. Component: Flow Control Ball Valve Name: Gulf-Western Size: 6"

7. Code: ASA-B16.5, 1957 ED Class: X1-2

8. Purpose (Statement of Problem): MMP 1-3582.00SN. To enhance the reliability of the valve operator.

Associated DWGs.: 1810-AA737-D0006
FIDCN M-7539

9. Narrative Summary (Brief Description of Work Performed):

1. The appropriate documents were reviewed to verify compliance with the applicable construction code.

2. Valve actuator mounting plate and valve bonnet were drilled and doweled.

10. Material Used: N/A. Material used is non integral attachment/non code.

==========

Prepared by: John Breza Date 12/26/90

NIS-2
OWNER'S REPORT OF REPAIR OR REPLACEMENT
As Required by the Provisions of ASME Code Section XI

1. Owner: Southern California Edison Company
2244 Walnut Grove Ave.
Rosemead, CA 91770

Traveler: S01-90-033

Unit: 1

2. Plant: San Onofre Nuclear Generating Station
P. O. Box 128, San Clemente, CA 92672

MMP: 1-3582.00SN

3. Work Performed by: Bechtel Construction Co.
P. O. Box 450
San Clemente, CA 92672

CWO: 90081312000

4. System Identification: Containment Recirculation Spray (CRS) P&ID: 5178120

5. (a) Applicable Construction Code: Valve (ASA B16.5, 1957 ED.) Code Classified X1-2

(b) Applicable Edition of Section XI Utilized for Repairs or Replacements:

1977 Edition Thru S'78 Addenda, Code Cases: N/A

6. Identification of Components Repaired or Replaced:

Name Component	Name of Manufacturer	Manufacturer Serial No.	National Board No.	Other Identification	Year Built	Repaired Replaced, or Replacement	ASME Code Stamped Yes/No
6" Flow Control Ball Valve	Gulf-Western	5100	N/A	S1-CRS-CV-518	N/A	Replace	No

7. Work Description: MMP 1-3582.00SN. Valve Actuator Mounting Plate and Valve Bonnet were drilled and doweled

8. Tests Conducted: System Leakage None

FORM NIS-2 (back)

9. Remarks:

Documentation for items listed in Block 6 are available onsite.
(Applicable Manufacturer's Data Reports to be attached)

CERTIFICATE OF COMPLIANCE

We certify that the statements made in this report are correct and this replacement conforms to the rules of the ASME Code, Section XI
(Repair or Replacement)

Signed [illegible] FLD. CONST. MGR. Dec. 27, 1990
(Owner or Owner's Designee) Title (Date)

CERTIFICATE OF INSPECTION

I, the undersigned holding a valid commission issued by the National Board of Boiler and Pressure Vessel Inspectors and the State or Province of California employed by *Arkwright Mutual Insurance Company of Norwood, Massachusetts have inspected the components described in this Owner's Report during the period from 9/22/90 to 1/2/91 and state that to the best of my knowledge and belief, this repair or replacement has been performed in accordance with Section XI of the ASME Code. By signing this certificate, neither the Inspector nor his employer makes any warranty, expressed or implied, concerning the repair or replacement in this Report. Furthermore, neither the Inspector nor his employer shall be liable in any manner for any personal injury or property damage or a loss of any kind arising from or connected with this inspection. *Factory Mutual System

[illegible] Commissions 1862 CA.
Inspector's Signature (State or Province, National Board

Date January 2, 1991

Note: Supplemental sheets in form of lists, sketches, or drawings may be used provided (1) size is 8-1/2 in. x 11 in., (2) information in Items 1 through 4 on this data report is included on each sheet is recorded at the top of this form.

NIS-2
OWNER'S REPORT OF REPAIR OR REPLACEMENT

As Required by the Provisions of ASME Code Section XI

Sheet 1 of 1

1. Owner: Southern California Edison Company
2244 Walnut Grove Ave., Rosemead, CA 91770

ASME MO: 89120055

Unit: 1

2. Plant: San Onofre Nuclear Generating Station
P.O. Box 128, San Clemente, CA 92674-0128

RS: 05S-90 R2

3. Work Performed by: Southern California Edison

P&ID: 5178020 (C-9)

4. System Identification: Containment Recirculation

5. (a) Applicable Construction Code: ASA B31.1 1955 Edition, Code Classified XI-2, Code Cases: None

(b) Applicable Edition of Section XI Utilized for Repairs or Replacements: 1977 Edition, S'78 Addenda, Code Cases: None

6. Identification of Components Repaired or Replaced:

Name of Component	Name of Manufacturer	Manufacturer Serial No.	National Board No.	Other Identification	Year Built	Repaired, Replaced, or Replacement	ASME Code Stamped Yes/No
Expansion Bellows	Pathway	N/A	N/A	S1-CRS-XJ-976 RSO 0299-90	N/A	Replacement	No
2" 300# RF Flange (2)	Eub Inc.	Et. 0381-90	N/A	SA182 F-304 RSO 0381-90 Note 1	N/A	Replacement	No
5/8" x 5 1/2" Studs (16)	Texas Bolt Co.	Et. JU-26	N/A	A-193 B7 RSO 0168-84 Note 2	N/A	Replacement	No
5/8" Nuts (32)	Texas Bolt Co.	Et. JU-84	N/A	A-194 2H RSO 0168-84 Note 2	N/A	Replacement	No
2" Sch 10 Pipe	Sandvik Steel	Et. 472180	N/A	A-312 Tp. 304L RSO 0810-88	N/A	Replacement	No

7. Work Description:

Expansion bellows had a through-wall leak. The bellows assembly and associated flanges were previously installed under DCP 3016.19PM without the required ASME Section XI/MO as documented on NCR SO1-P-7433. Replacement Code parts were verified as meeting the requirements of the original construction code. Welding was performed in accordance with WR1-90-096. PT examinations were performed on welds. VT-1 examination was performed on (temp attach) removal areas of replacement expansion bellows. A hydrostatic test and VT-2 examinations were performed.
Reference: NCR SO1-P-7433

Note 1: Reference ME-90-007 for Code reconciliation of materials.
Note 2: Reference ME-90-009 for Code reconciliation of materials.

8. Tests Conducted: System Leakage [ ] System Functional [ ] System Inservice [ ] Hydrostatic [X] Pneumatic [ ] Other [ ]
Pressure: 170 psig Temp: N/A °F

FORM NIS-2 (back)

9. Remarks: None

(Applicable Manufacturer's Data Reports to be attached)

CERTIFICATE OF COMPLIANCE

We certify that the statements made in this report are correct and this replacement (repair or replacement) conforms to the rules of the ASME Code, Section XI.

Signed [illegible] (Owner or Owner's Designee) Supvg. ASME Codes Engineer (Title) 5 Nov (Date) 1990

CERTIFICATE OF INSPECTION

I, the undersigned holding a valid commission issued by the National Board of Boiler and Pressure Vessel Inspectors and the State or Province of California, employed by Arkwright Mutual Insurance Company (Factory Mutual System) of Norwood, Massachusetts have inspected the components described in this Owner's Report during the period from 3/7/90 to 11/7/90 and state that to the best of my knowledge and belief, this repair or replacement has been performed in accordance with Section XI of the ASME Code. By signing this certificate, neither the Inspector nor his employer makes any warranty, expressed or implied, concerning the repair or replacement in this Report. Furthermore, neither the Inspector nor his employer shall be liable in any manner for any personal injury or property damage or a loss of any kind arising from or connected with this inspection.

[illegible] Commissions 1862 California
Inspector's Signature (State or Province, National Board)

Date November 7, 1990

Note: Supplemental sheets in the form of lists, sketches, or drawings may be used provided (1) size is 8-1/2 in. x 11 in., (2) information in Items 1 through 4 on this data report is included on each sheet, and (3) each sheet is numbered and the number of sheets is recorded at the top of this form.

NIS-2
OWNER'S REPORT OF REPAIR OR REPLACEMENT

As Required by the Provisions of ASME Code Section XI

Sheet 1 of 1

1. Owner: Southern California Edison Company
2244 Walnut Grove Ave., Rosemead, CA 91770

ASME MO: 91030337

Unit: 1

2. Plant: San Onofre Nuclear Generating Station
P.O. Box 128, San Clemente, CA 92674-0128

RS: 063-91

3. Work Performed by: Southern California Edison

P&ID: 5178600 (C-1)

4. System Identification: Containment Ventilation

5. (a) **Applicable Construction Code:** ASA B31.1, 1955 Edition, Code Classified XI-2, Code Cases: None

(b) **Applicable Edition of Section XI Utilized for Repairs or Replacements:** 1977 Edition, S'78 Addenda, Code Cases: None

6. **Identification of Components Repaired or Replaced:**

Name of Component	Name of Manufacturer	Manufacturer Serial No.	National Board No.	Other Identification	Year Built	Repaired, Replaced, or Replacement	ASME Code Stamped Yes/No
Control Valve	BS&B	N/A	N/A	S1-CVS-CV-40	N/A	Replaced	No
Pancake Flange	Allegheny Ludlum Steel	Ht. 845635	N/A	RSO 1363-90	N/A	Replacement	No

7. **Work Description:**

A pancake blind flange was installed on the downstream side of the addressed valve between the existing piping system flange and the valve outlet flange. The replacement blind flange material was verified as being compatible with the installation and system requirements.

Reference: NCR 91030021

8. **Tests Conducted:** System Leakage [ ] System Functional [ ] System Inservice [ ] Hydrostatic [ ] Pneumatic [ ] Other [X] N/A

FORM NIS-2 (back)

9. **Remarks:** None

(Applicable Manufacturer's Data Reports to be attached)

CERTIFICATE OF COMPLIANCE

We certify that the statements made in this report are correct and this replacement (repair or replacement) conforms to the rules of the ASME Code, Section XI.

Signed [signature] Supvg. ASME Codes Engineer 4/3 1991
(Owner or Owner's Designee) Title (Date)

CERTIFICATE OF INSPECTION

I, the undersigned holding a valid commission issued by the National Board of Boiler and Pressure Vessel Inspectors and the State or Province of California, employed by Arkwright Mutual Insurance Company (Factory Mutual System) of Norwood, Massachusetts have inspected the components described in this Owner's Report during the period from 03/06/91 to 04/07/91 and state that to the best of my knowledge and belief, this repair or replacement has been performed in accordance with Section XI of the ASME Code. By signing this certificate, neither the Inspector nor his employer makes any warranty, expressed or implied, concerning the repair or replacement in this Report. Furthermore, neither the Inspector nor his employer shall be liable in any manner for any personal injury or property damage or a loss of any kind arising from or connected with this inspection.

[signature] Commissions 1864 California
Inspector's Signature (State or Province, National Board)

Date April 7 1991

Note: Supplemental sheets in the form of lists, sketches, or drawings may be used provided (1) size is 8-1/2 in. x 11 in., (2) information in Items 1 through 4 on this data report is included on each sheet, and (3) each sheet is numbered and the number of sheets is recorded at the top of this form.

NIS-2
OWNER'S REPORT OF REPAIR OR REPLACEMENT

As Required by the Provisions of ASME Code Section XI

Sheet 1 of 1

1. Owner: Southern California Edison Company
2244 Walnut Grove Ave., Rosemead, CA 91770

ASME MO: 90101760

Unit: 1

2. Plant: San Onofre Nuclear Generating Station
P.O. Box 128, San Clemente, CA 92674-0128

RS: 364-90

3. Work Performed by: Southern California Edison

P&ID: 5178100-6

4. System Identification: Fuel Handling

5. (a) Applicable Construction Code: ANSI B31.1, Code Classified XI-2, Code Cases: None

(b) Applicable Edition of Section XI Utilized for Repairs or Replacements: 1977 Edition, S'78 Addenda, Code Cases: None

6. Identification of Components Repaired or Replaced:

Name of Component	Name of Manufacturer	Manufacturer Serial No.	National Board No.	Other Identification	Year Built	Repaired, Replaced, or Replacement	ASME Code Stamped Yes/No
Fuel Transfer Tube	N/A	N/A	N/A	S1-FHS-XFER-TUBE	N/A	---	No
Studs (5)	Cardinal	Ht. Code D4	N/A	RSO 3467-90	N/A	Replacement	No
Nuts (10)	Cardinal	Ht. Code D3	N/A	RSO 3467-90	N/A	Replacement	No

7. Work Description:

The bolting material consisting of five (5) studs and ten (10) nuts on the fuel transfer tube were damaged beyond repair and required replacement. The replacement studs (1 1/8" A193/B8 and nuts (1 1/8" A194/B) were verified to be in compliance with the original construction code requirements. A visual (VT-1) examination was conducted on the replacement bolting material with no relevant conditions noted.

8. Tests Conducted: System Leakage [ ] System Functional [ ] System Inservice [ ] Hydrostatic [ ] Pneumatic [ ] Other [X] N/A

FORM NIS-2 (back)

9. Remarks: A system pressure test will not be required because the more stringent 10CFR50 Appendix J testing is required per the Tech. Specs. These tests are two LLRT's; (seal test and transfer tube volume).

(Applicable Manufacturer's Data Reports to be attached)

CERTIFICATE OF COMPLIANCE

We certify that the statements made in this report are correct and this replacement (repair or replacement) conforms to the rules of the ASME Code, Section XI.

Signed [signature] (Owner or Owner's Designee) Supvg. ASME Codes Engineer (Title) 4/3 (Date) 1991

CERTIFICATE OF INSPECTION

I, the undersigned holding a valid commission issued by the National Board of Boiler and Pressure Vessel Inspectors and the State or Province of California, employed by Arkwright Mutual Insurance Company (Factory Mutual System) of Norwood, Massachusetts have inspected the components described in this Owner's Report during the period from 2/5/91 to 3/21/91 and state that to the best of my knowledge and belief, this repair or replacement has been performed in accordance with Section XI of the ASME Code. By signing this certificate, neither the Inspector nor his employer makes any warranty, expressed or implied, concerning the repair or replacement in this Report. Furthermore, neither the Inspector nor his employer shall be liable in any manner for any personal injury or property damage or a loss of any kind arising from or connected with this inspection.

[signature] Commissions 1574 California
Inspector's Signature (State or Province, National Board)

Date April 4 1991

Note: Supplemental sheets in the form of lists, sketches, or drawings may be used provided (1) size is 8-1/2 in. x 11 in., (2) information in Items 1 through 4 on this data report is included on each sheet, and (3) each sheet is numbered and the number of sheets is recorded at the top of this form.

NIS-2
OWNER'S REPORT OF REPAIR OR REPLACEMENT

As Required by the Provisions of ASME Code Section XI

1. **Owner:** Southern California Edison Company
   2244 Walnut Grove Ave., Rosemead, CA 91770

   ASME MO: 88022081

   Unit: 1

2. **Plant:** San Onofre Nuclear Generating Station
   P.O. Box 128, San Clemente, CA 92674-0128

   RS: 125-90

3. **Work Performed by:** Southern California Edison

   P&ID: 5178040

4. **System Identification:** Feedwater

5. (a) **Applicable Construction Code:** ASA B31.1, 1955 Edition, M-18668, Code Classified XI-2, Code Cases: None

   (b) **Applicable Edition of Section XI Utilized for Repairs or Replacements:** 1977 Edition, S'78 Addenda, Code Cases: None

6. **Identification of Components Repaired or Replaced:**

Name of Component	Name of Manufacturer	Manufacturer Serial No.	National Board No.	Other Identification	Year Built	Repaired, Replaced, or Replacement	ASME Code Stamped Yes/No
½" Needle Valve	Edwards	Mark #143	N/A	S1-FWS-339	N/A	Replaced	No
½" Globe Valve	Kerotest	AFV2-17	N/A	RSO 0410-90	N/A	Replacement	No
½" Sch. 80 Pipe	Tioga	Ht. W70910	N/A	RSO 2300-88 SA-106, Gr B	N/A	Replacement	No
½" Adaptor	Parker Hannifin	Ht. HAMW	N/A	RSO 1537-90	N/A	Replacement	No

7. **Work Description:**

As a result of a design change, the existing needle valve, piping, and adaptor were replaced. The replacements were verified as complying with the original Construction Code requirements. The valve was installed by welding. A VT-2 examination was conducted during the System Functional pressure test.

References: FCN's: S5238M, S5270M and S5249M, WR1-90-247, WR1-90-493, and ME-90-043

8. **Tests Conducted:** System Leakage [ ] System Functional [X] System Inservice [ ] Hydrostatic [ ] Pneumatic [ ] Other [ ]
   Pressure: 650 psig Temp: N/A

FORM NIS-2 (back)

9. Remarks: None

(Applicable Manufacturer's Data Reports to be attached)

CERTIFICATE OF COMPLIANCE

We certify that the statements made in this report are correct and this replacement (repair or replacement) conforms to the rules of the ASME Code, Section XI.

Signed [signature] (Owner or Owner's Designee) Supvg. ASME Codes Engineer (Title) 8 April (Date) 19 91

CERTIFICATE OF INSPECTION

I, the undersigned holding a valid commission issued by the National Board of Boiler and Pressure Vessel Inspectors and the State or Province of California, employed by Arkwright Mutual Insurance Company (Factory Mutual System) of Norwood, Massachusetts have inspected the components described in this Owner's Report during the period from 07/19/90 to 04/10/91 and state that to the best of my knowledge and belief, this repair or replacement has been performed in accordance with Section XI of the ASME Code. By signing this certificate, neither the Inspector nor his employer makes any warranty, expressed or implied, concerning the repair or replacement in this Report. Furthermore, neither the Inspector nor his employer shall be liable in any manner for any personal injury or property damage or a loss of any kind arising from or connected with this inspection.

[signature] Commissions 1864 California
Inspector's Signature (State or Province, National Board)

Date April 10 19 91

Note: Supplemental sheets in the form of lists, sketches, or drawings may be used provided (1) size is 8-1/2 in. x 11 in., (2) information in Items 1 through 4 on this data report is included on each sheet, and (3) each sheet is numbered and the number of sheets is recorded at the top of this form.

NIS-2
OWNER'S REPORT OF REPAIR OR REPLACEMENT

As Required by the Provisions of ASME Code Section XI

Sheet 1 of 1

1. Owner: Southern California Edison Company
2244 Walnut Grove Ave., Rosemead, CA 91770

ASME MO: 91011984

Unit: 1

2. Plant: San Onofre Nuclear Generating Station
P.O. Box 128, San Clemente, CA 92674-0128

RS: 024-91

3. Work Performed by: Southern California Edison

P&ID: 5178206
5178225

4. System Identification: Feedwater

5. (a) Applicable Construction Code: ASA B31.1, 1955 Edition, Code Classified XI-2, Code Cases: None

(b) Applicable Edition of Section XI Utilized for Repairs or Replacements: 1977 Edition, S'78 Addenda, Code Cases: None

6. Identification of Components Repaired or Replaced:

Name of Component	Name of Manufacturer	Manufacturer Serial No.	National Board No.	Other Identification	Year Built	Repaired, Replaced, or Replacement	ASME Code Stamped Yes/No
2" Carbon Steel Piping	N/A	N/A	N/A	S1-FWS-341; 342; & 343-2"-EG	N/A	Repaired	No

7. Work Description:

Indications (gouges, undercut and deposited weld metal) were detected by surface examination outside of the weld area on the addressed piping. A nonconformance report (NCR) was written to address this condition. The indications were removed, blended into the surrounding surface by grinding and buffing assuring a 3:1 taper.

A volumetric examination was performed using the straight beam UT method. Two readings were identified as below the minimum design requirements of the original construction code (ASA B31.1). The addressed NCR was revised (Rev.2) to document this condition. Calculations conducted on the area indicated the remaining wall thickness is inadequate for the addressed design condition (1250 psia/850°F). Per design change the design pressure/temp. of the blowdown line was reduced to 1000 psia/545F.

References: NCR 91010152, NDE Reports: 1MT-002-91, 1MT-006-91 thru 1MT-009-91, 1UT-014-91 thru 1UT-017-91, Design Calculation DC-2580, Supp H., and DCN ABG-3233.

8. Tests Conducted: System Leakage [ ] System Functional [ ] System Inservice [ ] Hydrostatic [ ] Pneumatic [ ] Other [ ]
Pressure: N/A psig Temp: N/A

FORM NIS-2 (back)

9. **Remarks:** None

(Applicable Manufacturer's Data Reports to be attached)

CERTIFICATE OF COMPLIANCE

We certify that the statements made in this report are correct and this repair (repair or replacement) conforms to the rules of the ASME Code, Section XI.

Signed [signature] (Owner or Owner's Designee) Supvg. ASME Codes Engineer (Title) 6-8 (Date) 1991

CERTIFICATE OF INSPECTION

I, the undersigned holding a valid commission issued by the National Board of Boiler and Pressure Vessel Inspectors and the State or Province of California, employed by Arkwright Mutual Insurance Company (Factory Mutual System) of Norwood, Massachusetts have inspected the components described in this Owner's Report during the period from 2/4/91 to 6/8/91 and state that to the best of my knowledge and belief, this repair or replacement has been performed in accordance with Section XI of the ASME Code. By signing this certificate, neither the Inspector nor his employer makes any warranty, expressed or implied, concerning the repair or replacement in this Report. Furthermore, neither the Inspector nor his employer shall be liable in any manner for any personal injury or property damage or a loss of any kind arising from or connected with this inspection.

[signature] Commissions 1862 California
Inspector's Signature (State or Province, National Board)

Date June 8, 1991

Note: Supplemental sheets in the form of lists, sketches, or drawings may be used provided (1) size is 8-1/2 in. x 11 in., (2) information in Items 1 through 4 on this data report is included on each sheet, and (3) each sheet is numbered and the number of sheets is recorded at the top of this form.

NIS-2
OWNER'S REPORT OF REPAIR OR REPLACEMENT

As Required by the Provisions of ASME Code Section XI

ASME MO: 89071853

Unit: 1

RS: 143-90

P&ID: 5178206 (H-9)

1. Owner: Southern California Edison Company
   2244 Walnut Grove Ave., Rosemead, CA 91770

2. Plant: San Onofre Nuclear Generating Station
   P.O. Box 128, San Clemente, CA 92674-0128

3. Work Performed by: Southern California Edison

4. System Identification: Feedwater

5. (a) Applicable Construction Code: ANSI B16.34, 1977 Edition, Code Classified XI-2, Code Cases: None

   (b) Applicable Edition of Section XI Utilized for Repairs or Replacements: 1977 Edition, S'78 Addenda, Code Cases: None

6. Identification of Components Repaired or Replaced:

Name of Component	Name of Manufacturer	Manufacturer Serial No.	National Board No.	Other Identification	Year Built	Repaired, Replaced, or Replacement	ASME Code Stamped Yes/No
10" Check Valve	Atwood-Morrill	N/A	N/A	S1-FWS-345	N/A	---	No
10" Check Valve Disc	Atwood-Morrill	OBFH 2	N/A	RSO 3014-90 SA-216, Gr WCB	N/A	Replacement	No

7. Work Description:

   Per the address Facility Change Notices (FCN's), the existing check valve disc was replaced by a modified check valve disc with extended hammer to reduce fluttering and wear to shaft and bushing. The replacement disc was reconciled and verified as meeting the original construction code requirements.

   References: FCN S-5392 & S-5394M (Rev. 2), ME-90-73

8. Tests Conducted: System Leakage [ ] System Functional [X] System Inservice [ ] Hydrostatic [ ] Pneumatic [ ] Other [ ]
   Pressure: 640 psig Temp: N/A

FORM NIS-2 (back)

9. Remarks: None

(Applicable Manufacturer's Data Reports to be attached)

CERTIFICATE OF COMPLIANCE

We certify that the statements made in this report are correct and this replacement (repair or replacement) conforms to the rules of the ASME Code, Section XI.

Signed _____ (Owner or Owner's Designee) Supvg. ASME Codes Engineer (Title) 23 April (Date) 19 91

CERTIFICATE OF INSPECTION

I, the undersigned holding a valid commission issued by the National Board of Boiler and Pressure Vessel Inspectors and the State or Province of California, employed by Arkwright Mutual Insurance Company (Factory Mutual System) of Norwood, Massachusetts have inspected the components described in this Owner's Report during the period from 7/19/90 to 4/28/91 and state that to the best of my knowledge and belief, this repair or replacement has been performed in accordance with Section XI of the ASME Code. By signing this certificate, neither the Inspector nor his employer makes any warranty, expressed or implied, concerning the repair or replacement in this Report. Furthermore, neither the Inspector nor his employer shall be liable in any manner for any personal injury or property damage or a loss of any kind arising from or connected with this inspection.

_____ Commissions 1862 California
Inspector's Signature (State or Province, National Board)

Date April 28, 19 91

Note: Supplemental sheets in the form of lists, sketches, or drawings may be used provided (1) size is 8-1/2 in. x 11 in., (2) information in Items 1 through 4 on this data report is included on each sheet, and (3) each sheet is numbered and the number of sheets is recorded at the top of this form.

NIS-2
OWNER'S REPORT OF REPAIR OR REPLACEMENT

As Required by the Provisions of ASME Code Section XI

Sheet 1 of 1

1. Owner: Southern California Edison Company
2244 Walnut Grove Ave., Rosemead, CA 91770

ASME MO: 89071854

Unit: 1

2. Plant: San Onofre Nuclear Generating Station
P.O. Box 128, San Clemente, CA 92674-0128

RS: 144-90

3. Work Performed by: Southern California Edison

P&ID: 5178206

4. System Identification: Feedwater

5. (a) Applicable Construction Code: ANSI B16.34, 1977 Edition, Code Classified XI-2, Code Cases: None

(b) Applicable Edition of Section XI Utilized for Repairs or Replacements: 1977 Edition, S'78 Addenda, Code Cases: None

6. Identification of Components Repaired or Replaced:

Name of Component	Name of Manufacturer	Manufacturer Serial No.	National Board No.	Other Identification	Year Built	Repaired, Replaced, or Replacement	ASME Code Stamped Yes/No
10" Check Valve	Atwood-Morrill	N/A	N/A	S1-FWS-346	N/A	---	No
10" Check Valve Disc	Atwood-Morrill	OBFH3	N/A	RSO 3014-90 SA-216, Gr WCB	N/A	Replacement	No

7. Work Description:

Per the address Facility Change Notices (FCN's), the existing check valve disc was replaced by a modified check valve disc with an extended hammer to reduce fluttering and wear to the shaft and bushing. The replacement disc was reconciled and verified as meeting the original construction code requirements. A 9/32" diameter thru-hole was drilled thru the disc to meet drawing using previously place disc as a "template".

References: FCN's S-5392M and S-5394M, ME-90-074

8. Tests Conducted: System Leakage [ ] System Functional [X] System Inservice [ ] Hydrostatic [ ] Pneumatic [ ] Other [ ]
Pressure: 700 psig Temp: N/A

FORM NIS-2 (back)

9. Remarks: None

(Applicable Manufacturer's Data Reports to be attached)

CERTIFICATE OF COMPLIANCE

We certify that the statements made in this report are correct and this replacement (repair or replacement) conforms to the rules of the ASME Code, Section XI.

Signed _____ (Owner or Owner's Designee) Supvg. ASME Codes Engineer (Title) 25 April 1991 (Date)

CERTIFICATE OF INSPECTION

I, the undersigned holding a valid commission issued by the National Board of Boiler and Pressure Vessel Inspectors and the State or Province of California, employed by Arkwright Mutual Insurance Company (Factory Mutual System) of Norwood, Massachusetts have inspected the components described in this Owner's Report during the period from 11/09/90 to 04/27/91 and state that to the best of my knowledge and belief, this repair or replacement has been performed in accordance with Section XI of the ASME Code. By signing this certificate, neither the Inspector nor his employer makes any warranty, expressed or implied, concerning the repair or replacement in this Report. Furthermore, neither the Inspector nor his employer shall be liable in any manner for any personal injury or property damage or a loss of any kind arising from or connected with this inspection.

Inspector's Signature _____ Commissions 1864 California (State or Province, National Board)

Date April 27 1991

Note: Supplemental sheets in the form of lists, sketches, or drawings may be used provided (1) size is 8-1/2 in. x 11 in., (2) information in Items 1 through 4 on this data report is included on each sheet, and (3) each sheet is numbered and the number of sheets is recorded at the top of this form.

NIS-2
OWNER'S REPORT OF REPAIR OR REPLACEMENT

As Required by the Provisions of ASME Code Section XI

Sheet 1 of 1

1. Owner: Southern California Edison Company
2244 Walnut Grove Ave., Rosemead, CA 91770

ASME MO: 88090099

Unit: 1

2. Plant: San Onofre Nuclear Generating Station
P.O. Box 128, San Clemente, CA 92674-0128

RS: 427-89

3. Work Performed by: Southern California Edison

P&ID: 5178206

4. System Identification: Feedwater

5. (a) Applicable Construction Code: Rockwell Standard Design Specification SA-499424, Code Classified XI-2, Code Cases: None

(b) Applicable Edition of Section XI Utilized for Repairs or Replacements: 1977 Edition, S'78 Addenda, Code Cases: None

6. Identification of Components Repaired or Replaced:

Name of Component	Name of Manufacturer	Manufacturer Serial No.	National Board No.	Other Identification	Year Built	Repaired, Replaced, or Replacement	ASME Code Stamped Yes/No
2" Check Valve	Rockwell-Edwards	N/A	N/A	S1-FWS-371	N/A	---	No
Valve Disc	Rockwell International	39 Lot. 14496 Part# 1611424	N/A	RSO 1575-89 ASTM-A-565-85 Grade 616	N/A	Replacement	No

7. Work Description:

Valve leaked through seat. The valve disc was replaced and reconciled with the original construction code requirements. A VT-2 examination was conducted during a system pressure test with no leakage noted.

Reference: CR-88-008

8. Tests Conducted: System Leakage [ ] System Functional [X] System Inservice [ ] Hydrostatic [ ] Pneumatic [ ] Other [ ]
Pressure: 780 psig Temp: N/A

FORM NIS-2 (back)

9. **Remarks:** None

(Applicable Manufacturer's Data Reports to be attached)

CERTIFICATE OF COMPLIANCE

We certify that the statements made in this report are correct and this replacement (repair or replacement) conforms to the rules of the ASME Code, Section XI.

Signed [signature] (Owner or Owner's Designee) Supvg. ASME Codes Engineer (Title) 6/6 (Date) 19 91

CERTIFICATE OF INSPECTION

I, the undersigned holding a valid commission issued by the National Board of Boiler and Pressure Vessel Inspectors and the State or Province of California, employed by Arkwright Mutual Insurance Company (Factory Mutual System) of Norwood, Massachusetts have inspected the components described in this Owner's Report during the period from 12/10/90 to 6/7/91 and state that to the best of my knowledge and belief, this repair or replacement has been performed in accordance with Section XI of the ASME Code. By signing this certificate, neither the Inspector nor his employer makes any warranty, expressed or implied, concerning the repair or replacement in this Report. Furthermore, neither the Inspector nor his employer shall be liable in any manner for any personal injury or property damage or a loss of any kind arising from or connected with this inspection.

[signature] Commissions 1862 California
Inspector's Signature (State or Province, National Board)

Date June 7, 1991

Note: Supplemental sheets in the form of lists, sketches, or drawings may be used provided (1) size is 8-1/2 in. x 11 in., (2) information in Items 1 through 4 on this data report is included on each sheet, and (3) each sheet is numbered and the number of sheets is recorded at the top of this form.

ASME SECTION XI ABSTRACT
OWNER'S SUMMARY OF REPAIR OR REPLACEMENT

1. **Owner:** Southern California Edison Company
   2244 Walnut Grove Ave., Rosemead, CA 91770

   ASME MO: 88090096

   Unit: 1

2. **Plant:** San Onofre Nuclear Generating Station
   P.O. Box 128, San Clemente, CA 92674-0128

   RS: 274-90

3. **Work Performed by:** Southern California Edison

   P&ID: 5178206

4. **System Identification:** Main Feedwater

5. **Plant Tag No.:** S1-FWS-373 **Serial No.:** N/A

6. **Component:** Globe Valve **Name:** Rockwell International **Size:** 2"

7. **Code:** ASME Section III **Class:** XI-2

8. **Purpose (Statement of Problem):**

   The valve was damaged beyond repair and requires replacement.

9. **Narrative Summary (Brief Description of Work Performed):**

   The replacement valve, built to ASME III, Class 3, W'77, was verified to be in compliance with the original construction code as reconciled by SCE Material Reconciliation Report ME-90-051. Installation of the replacement valve was performed by welding in accordance with SCE Weld Record WR1-90-558. A satisfactory VT-2 examination was conducted in conjunction with a system hydrostatic pressure test at 1720 psig/68 °F with no leakage noted.

10. **Material Used:**

    2" 600# Globe Valve

Prepared By: K.L. Collins **Date:** March 8, 1991

NIS-2
OWNER'S REPORT OF REPAIR OR REPLACEMENT

As Required by the Provisions of ASME Code Section XI

Sheet 1 of 1

1. Owner: Southern California Edison Company
2244 Walnut Grove Ave., Rosemead, CA 91770

ASME MO: 88090096

Unit: 1

2. Plant: San Onofre Nuclear Generating Station
P.O. Box 128, San Clemente, CA 92674-0128

RS: 274-90

3. Work Performed by: Southern California Edison

P&ID: 5178206

4. System Identification: Main Feedwater

5. (a) Applicable Construction Code: ASA B31.1, 1955 Edition, Code Classified: XI-2, Code Cases: None

(b) Applicable Edition of Section XI Utilized for Repairs or Replacements: 1977 Edition, S'78 Addenda, Code Cases: None

6. Identification of Components Repaired or Replaced:

Name of Component	Name of Manufacturer	Manufacturer Serial No.	National Board No.	Other Identification	Year Built	Repaired, Replaced, or Replacement	ASME Code Stamped Yes/No
2" 600# Globe Valve	Rockwell International	N/A	N/A	S1-FWS-373	N/A	Replaced	No
2" 600# Globe Valve	Rockwell International	AW547	N/A	RSO 2275-90 ME-90-051	N/A	Replacement	Yes

7. Work Description:

The valve was damaged beyond repair and required replacement. The replacement valve, built to ASME III, Class 3, W'77, was verified to be in compliance with the original construction code as reconciled by SCE Material Reconciliation Report ME-90-051. Installation of the replacement valve was performed by welding in accordance with SCE Weld Record WR1-90-558. A satisfactory VT-2 examination was conducted in conjunction with a system hydrostatic pressure test at 1720 psig/68 °F with no leakage noted.

8. Tests Conducted: System Leakage [ ] System Functional [ ] System Inservice [ ] Hydrostatic [X] Pneumatic [ ] Other [ ]
Pressure: 1720 psig Temp: 68 °F

FORM NIS-2 (back)

9. **Remarks:** None

(Applicable Manufacturer's Data Reports to be attached)

CERTIFICATE OF COMPLIANCE

We certify that the statements made in this report are correct and this replacement (repair or replacement) conforms to the rules of the ASME Code, Section XI.

Signed [signature] (Owner or Owner's Designee) Supvg. ASME Codes Engineer (Title) 11 March (Date) 19 91

CERTIFICATE OF INSPECTION

I, the undersigned holding a valid commission issued by the National Board of Boiler and Pressure Vessel Inspectors and the State or Province of California, employed by Arkwright Mutual Insurance Company (Factory Mutual System) of Norwood, Massachusetts have inspected the components described in this Owner's Report during the period from 09/28/90 to 03/12/91 and state that to the best of my knowledge and belief, this repair or replacement has been performed in accordance with Section XI of the ASME Code. By signing this certificate, neither the Inspector nor his employer makes any warranty, expressed or implied, concerning the repair or replacement in this Report. Furthermore, neither the Inspector nor his employer shall be liable in any manner for any personal injury or property damage or a loss of any kind arising from or connected with this inspection.

[signature] Commissions 1864 California
Inspector's Signature (State or Province, National Board)

Date March 12 19 91

Note: Supplemental sheets in the form of lists, sketches, or drawings may be used provided (1) size is 8-1/2 in. x 11 in., (2) information in Items 1 through 4 on this data report is included on each sheet, and (3) each sheet is numbered and the number of sheets is recorded at the top of this form.

NIS-2
OWNER'S REPORT OF REPAIR OR REPLACEMENT

As Required by the Provisions of ASME Code Section XI

Sheet 1 of 1

1. Owner: Southern California Edison Company
2244 Walnut Grove Ave., Rosemead, CA 91770

ASME MO: 90060430

Unit: 1

2. Plant: San Onofre Nuclear Generating Station
P.O. Box 128, San Clemente, CA 92674-0128

RS: 377-90

3. Work Performed by: Southern California Edison

P&ID: 5178206

4. System Identification: Feedwater

5. (a) Applicable Construction Code: ASME Section I, 1962 Edition (System); Manufacturer's Standard (Valve), Code Classified XI-2, Code Cases: None

(b) Applicable Edition of Section XI Utilized for Repairs or Replacements: 1977 Edition, S'78 Addenda, Code Cases: None

6. Identification of Components Repaired or Replaced:

Name of Component	Name of Manufacturer	Manufacturer Serial No.	National Board No.	Other Identification	Year Built	Repaired, Replaced, or Replacement	ASME Code Stamped Yes/No
4" Gate Valve	Pacific	65421	N/A	S1-FWS-376	N/A	---	No
Valve Disc	Pacific	N/A	N/A	S1-FWS-376	N/A	Repaired	No

7. Work Description:

The gate (wedge) disc required resurfacing on both sides. The "old" hard facing (stellite) was removed to the base material. Cracks were observed in the first attempt to apply hardfacing. The hardfacing was again removed, including some base material. A weld repair of the base material was performed and hardfacing was again applied. Linear indications detected by a PT examination were removed by grinding and blending into the surrounding surface. A satisfactory PT examination was conducted with no relevant indications noted. Final machining was performed. Disc and seat were lapped and had satisfactory blue check.

References: NCR 91010024, WR1-90-798, WR1-90-805, WR1-90-843

8. Tests Conducted: System Leakage [ ] System Functional [X] System Inservice [ ] Hydrostatic [ ] Pneumatic [ ] Other [ ]
Pressure: 650 psig Temp: N/A

FORM NIS-2 (back)

9. **Remarks:** None

(Applicable Manufacturer's Data Reports to be attached)

CERTIFICATE OF COMPLIANCE

We certify that the statements made in this report are correct and this repair (repair or replacement) conforms to the rules of the ASME Code, Section XI.

Signed [signature] (Owner or Owner's Designee) Supvg. ASME Codes Engineer (Title) 6 May (Date) 1991

CERTIFICATE OF INSPECTION

I, the undersigned holding a valid commission issued by the National Board of Boiler and Pressure Vessel Inspectors and the State or Province of California, employed by Arkwright Mutual Insurance Company (Factory Mutual System) of Norwood, Massachusetts have inspected the components described in this Owner's Report during the period from 12/01/90 to 05/09/91 and state that to the best of my knowledge and belief, this repair or replacement has been performed in accordance with Section XI of the ASME Code. By signing this certificate, neither the Inspector nor his employer makes any warranty, expressed or implied, concerning the repair or replacement in this Report. Furthermore, neither the Inspector nor his employer shall be liable in any manner for any personal injury or property damage or a loss of any kind arising from or connected with this inspection.

[signature] Commissions 1864 California
Inspector's Signature (State or Province, National Board)

Date May 9 19 91

Note: Supplemental sheets in the form of lists, sketches, or drawings may be used provided (1) size is 8-1/2 in. x 11 in., (2) information in Items 1 through 4 on this data report is included on each sheet, and (3) each sheet is numbered and the number of sheets is recorded at the top of this form.

NIS-2

OWNER'S REPORT OF REPAIR OR REPLACEMENT

As Required by the Provisions of ASME Code Section XI

Sheet 1 of 1

1. Owner: Southern California Edison Company
2244 Walnut Grove Ave., Rosemead, CA 91770

ASME MO: SS090100

Unit: 1

2. Plant: San Onofre Nuclear Generating Station
P.O. Box 128, San Clemente, CA 92674-0128

RS: 4S1-89

3. Work Performed by: Southern California Edison

P&ID: 5178206

4. System Identification: Feedwater

5. (a) Applicable Construction Code: Rockwell Standard Design Spec. SA-499424, Code Classified XI-2, Code Cases: None

(b) Applicable Edition of Section XI Utilized for Repairs or Replacements: 1977 Edition, S'78 Addenda, Code Cases: None

6. Identification of Components Repaired or Replaced:

Name of Component	Name of Manufacturer	Manufacturer Serial No.	National Board No.	Other Identification	Year Built	Repaired, Replaced, or Replacement	ASME Code Stamped Yes/No
2" Check Valve	Rockwell-Edwards	N/A	N/A	S1-FWS-386	N/A	---	No
2" Disc	Rockwell International	42 Lot. 14496	N/A	RSO 1575-89 ASTM-A-565-85 Grade 616	1989	Replacement	No

7. Work Description:

The valve disc required replacement. Leakage was discovered across valve seat. The valve disc was replaced. The replacement was reconciled with the original construction code requirements. A VT-2 examination was conducted during a system pressure test with no leakage noted.

Reference: CR-88-008

8. Tests Conducted: System Leakage [ ] System Functional [X] System Inservice [ ] Hydrostatic [ ] Pneumatic [ ] Other [ ]
Pressure: 780 psig Temp: N/A

FORM NIS-2 (back)

9. **Remarks:** None

(Applicable Manufacturer's Data Reports to be attached)

CERTIFICATE OF COMPLIANCE

We certify that the statements made in this report are correct and this replacement (repair or replacement) conforms to the rules of the ASME Code, Section XI.

Signed [signature] (Owner or Owner's Designee) Supvg. ASME Codes Engineer (Title) 6/6 (Date) 1991

CERTIFICATE OF INSPECTION

I, the undersigned holding a valid commission issued by the National Board of Boiler and Pressure Vessel Inspectors and the State or Province of California, employed by Arkwright Mutual Insurance Company (Factory Mutual System) of Norwood, Massachusetts have inspected the components described in this Owner's Report during the period from 12/10/90 to 6/7/91 and state that to the best of my knowledge and belief, this repair or replacement has been performed in accordance with Section XI of the ASME Code. By signing this certificate, neither the Inspector nor his employer makes any warranty, expressed or implied, concerning the repair or replacement in this Report. Furthermore, neither the Inspector nor his employer shall be liable in any manner for any personal injury or property damage or a loss of any kind arising from or connected with this inspection.

[signature] Commissions 1862 California
Inspector's Signature (State or Province, National Board)

Date June 7, 1991

Note: Supplemental sheets in the form of lists, sketches, or drawings may be used provided (1) size is 8-1/2 in. x 11 in., (2) information in Items 1 through 4 on this data report is included on each sheet, and (3) each sheet is numbered and the number of sheets is recorded at the top of this form.

ASME SECTION XI ABSTRACT
OWNER'S SUMMARY OF REPAIR OR REPLACEMENT

1. **Owner:** Southern California Edison Company
   2244 Walnut Grove Ave., Rosemead, CA 91770

   ASME MO: 88090097

   Unit: 1

2. **Plant:** San Onofre Nuclear Generating Station
   P.O. Box 128, San Clemente, CA 92674-0128

   RS: 275-90

3. **Work Performed by:** Southern California Edison

   P&ID: 5178206

4. **System Identification:** Main Feedwater

5. **Plant Tag No.:** S1-FWS-388 **Serial No.:** N/A

6. **Component:** Globe Valve **Name:** Rockwell International **Size:** 2"

7. **Code:** ASA B31.1, 1955 Edition **Class:** XI-2

8. **Purpose (Statement of Problem):**

   The valve was inspected and found to be damaged beyond repair.

9. **Narrative Summary (Brief Description of Work Performed):**

   The replacement valve was verified to be in compliance with the original code as reconciled by SCE Material Evaluation Report ME-90-052. Installation of the replacement valve was performed by welding in accordance with SCE Weld Record WR1-90-559. A VT-2 examination was conducted in conjunction with a system hydrostatic pressure test at 1720 psig/68 °F.

10. **Material Used:**

    2" 600# Globe Valve

Prepared By: K.L. Collins **Date:** March 8, 1991

NIS-2

OWNER'S REPORT OF REPAIR OR REPLACEMENT

As Required by the Provisions of ASME Code Section XI

Sheet 1 of 1

1. Owner: Southern California Edison Company
2244 Walnut Grove Ave., Rosemead, CA 91770

ASME MO: SS090097

Unit: 1

2. Plant: San Onofre Nuclear Generating Station
P.O. Box 128, San Clemente, CA 92674-0128

RS: 275-90

3. Work Performed by: Southern California Edison

P&ID: 5178206

4. System Identification: Main Feedwater

5. (a) Applicable Construction Code: ASA B31.1 1955 Edition, Code Classified XI-2, Code Cases: None

(b) Applicable Edition of Section XI Utilized for Repairs or Replacements: 1977 Edition, S'78 Addenda, Code Cases: None

6. Identification of Components Repaired or Replaced:

Name of Component	Name of Manufacturer	Manufacturer Serial No.	National Board No.	Other Identification	Year Built	Repaired, Replaced, or Replacement	ASME Code Stamped Yes/No
2" 600# Globe Valve	Rockwell International	N/A	N/A	S1-FWS-388	N/A	Replaced	No
2" 600# Globe Valve	Rockwell International	AW-546	N/A	RSO 2275-90 ME-90-052	1977	Replacement	Yes (N)

7. Work Description:

The valve was inspected and found to be damaged beyond repair. The replacement valve was verified to be in compliance with the original code as reconciled by SCE Material Evaluation Report ME-90-052. Installation of the replacement valve was performed by welding in accordance with SCE Weld Record WR1-90-559. A VT-2 examination was conducted in conjunction with a system hydrostatic pressure test.

8. Tests Conducted: System Leakage [ ] System Functional [ ] System Inservice [ ] Hydrostatic [X] Pneumatic [ ] Other [ ]
Pressure: 1720 psig Temp: 68 °F

FORM NIS-2 (back)

9. Remarks: None

(Applicable Manufacturer's Data Reports to be attached)

CERTIFICATE OF COMPLIANCE

We certify that the statements made in this report are correct and this replacement (repair or replacement) conforms to the rules of the ASME Code, Section XI.

Signed [signature] (Owner or Owner's Designee) Supvg. ASME Codes Engineer (Title) 11 March 1991 (Date)

CERTIFICATE OF INSPECTION

I, the undersigned holding a valid commission issued by the National Board of Boiler and Pressure Vessel Inspectors and the State or Province of California, employed by Arkwright Mutual Insurance Company (Factory Mutual System) of Norwood, Massachusetts have inspected the components described in this Owner's Report during the period from 09/28/90 to 03/12/91 and state that to the best of my knowledge and belief, this repair or replacement has been performed in accordance with Section XI of the ASME Code. By signing this certificate, neither the Inspector nor his employer makes any warranty, expressed or implied, concerning the repair or replacement in this Report. Furthermore, neither the Inspector nor his employer shall be liable in any manner for any personal injury or property damage or a loss of any kind arising from or connected with this inspection.

[signature] Commissions 1864 California

Inspector's Signature (State or Province, National Board)

Date March 12 1991

Note: Supplemental sheets in the form of lists, sketches, or drawings may be used provided (1) size is 8-1/2 in. x 11 in., (2) information in Items 1 through 4 on this data report is included on each sheet, and (3) each sheet is numbered and the number of sheets is recorded at the top of this form.

NIS-2
OWNER'S REPORT OF REPAIR OR REPLACEMENT

As Required by the Provisions of ASME Code Section XI

Sheet 1 of 1

1. Owner: Southern California Edison Company
2244 Walnut Grove Ave., Rosemead, CA 91770

ASME MO: 89071855

Unit: 1

2. Plant: San Onofre Nuclear Generating Station
P.O. Box 128, San Clemente, CA 92674-0128

RS: 145-90

3. Work Performed by: Southern California Edison

P&ID: 5178206 (B-9)

4. System Identification: Feedwater

5. (a) Applicable Construction Code: ANSI B16.34, 1977 Edition, Code Classified XI-2, Code Cases: None

(b) Applicable Edition of Section XI Utilized for Repairs or Replacements: 1977 Edition, S'78 Addenda, Code Cases: None

6. Identification of Components Repaired or Replaced:

Name of Component	Name of Manufacturer	Manufacturer Serial No.	National Board No.	Other Identification	Year Built	Repaired, Replaced, or Replacement	ASME Code Stamped Yes/No
10" Check Valve	Atwood-Morrill	N/A	N/A	S1-FWS-398	N/A	---	No
10" Disc	Atwood-Morrill	OBFH 4	N/A	RSO 3014-90	N/A	Replacement	No

7. Work Description:

Excessive wear was noted on the bushing and valve shaft caused by valve disc fluttering. Facility change notices (FCN's) were issued to modify the valve to reduce fluttering. A replacement disc was installed and verified to be compatible with the original construction code requirements. Installation of the valve disc required drilling new dowel holes to properly align the shaft and disc.

References: NCR 90080227, FCN S-5392M, FCN S-5394M Rev. 2, ME-90-074

8. Tests Conducted: System Leakage [ ] System Functional [X] System Inservice [ ] Hydrostatic [ ] Pneumatic [ ] Other [ ]
Pressure: 640 psig Temp: N/A

FORM NIS-2 (back)

9. **Remarks:** None

(Applicable Manufacturer's Data Reports to be attached)

CERTIFICATE OF COMPLIANCE

We certify that the statements made in this report are correct and this replacement (repair or replacement) conforms to the rules of the ASME Code, Section XI.

Signed [signature] (Owner or Owner's Designee) Supvg. ASME Codes Engineer (Title) 23 April 1991 (Date)

CERTIFICATE OF INSPECTION

I, the undersigned holding a valid commission issued by the National Board of Boiler and Pressure Vessel Inspectors and the State or Province of California, employed by Arkwright Mutual Insurance Company (Factory Mutual System) of Norwood, Massachusetts have inspected the components described in this Owner's Report during the period from 7/23/90 to 4/21/91 and state that to the best of my knowledge and belief, this repair or replacement has been performed in accordance with Section XI of the ASME Code. By signing this certificate, neither the Inspector nor his employer makes any warranty, expressed or implied, concerning the repair or replacement in this Report. Furthermore, neither the Inspector nor his employer shall be liable in any manner for any personal injury or property damage or a loss of any kind arising from or connected with this inspection.

[signature] Commissions California 1574
Inspector's Signature (State or Province, National Board)

Date April 24 1991

Note: Supplemental sheets in the form of lists, sketches, or drawings may be used provided (1) size is 8-1/2 in. x 11 in., (2) information in Items 1 through 4 on this data report is included on each sheet, and (3) each sheet is numbered and the number of sheets is recorded at the top of this form.

NIS-2
OWNER'S REPORT OF REPAIR OR REPLACEMENT

As Required by the Provisions of ASME Code Section XI

1. Owner: Southern California Edison Company
   2244 Walnut Grove Ave., Rosemead, CA 91770

   ASME MO: 88090101

   Unit: 1

2. Plant: San Onofre Nuclear Generating Station
   P.O. Box 128, San Clemente, CA 92674-0128

   RS: 482-89

3. Work Performed by: Southern California Edison

   P&ID: 5178206

4. System Identification: Feedwater

5. (a) Applicable Construction Code: Rockwell Standard Design Spec. SA-499424, Code Classified XI-2, Code Cases: None

   (b) Applicable Edition of Section XI Utilized for Repairs or Replacements: 1977 Edition, S'78 Addenda, Code Cases: None

6. Identification of Components Repaired or Replaced:

Name of Component	Name of Manufacturer	Manufacturer Serial No.	National Board No.	Other Identification	Year Built	Repaired, Replaced, or Replacement	ASME Code Stamped Yes/No
2" Check Valve	Rockwell-Edwards	N/A	N/A	S1-FWS-410	N/A	---	No
Valve Disc	Rockwell-International	41 Ht. 14496 Part# 1611424	N/A	RSO 1575-89 ASTM-A-565-85 Grade 616	1989	Replacement	No

7. Work Description:

   Valve leaked across seat. The valve disc was replaced and reconciled with the original construction code requirements. A VT-2 examination was conducted during a system pressure test.

   Reference: CR-88-008

8. Tests Conducted: System Leakage [ ] System Functional [X] System Inservice [ ] Hydrostatic [ ] Pneumatic [ ] Other [ ]
   Pressure: 780 psig Temp: N/A

FORM NIS-2 (back)

9. **Remarks:** None

(Applicable Manufacturer's Data Reports to be attached)

CERTIFICATE OF COMPLIANCE

We certify that the statements made in this report are correct and this replacement (repair or replacement) conforms to the rules of the ASME Code, Section XI.

Signed [illegible] (Owner or Owner's Designee) Supvg. ASME Codes Engineer (Title) 6/6 (Date) 1991

CERTIFICATE OF INSPECTION

I, the undersigned holding a valid commission issued by the National Board of Boiler and Pressure Vessel Inspectors and the State or Province of California, employed by Arkwright Mutual Insurance Company (Factory Mutual System) of Norwood, Massachusetts have inspected the components described in this Owner's Report during the period from 11/7/90 to 6/7/91 and state that to the best of my knowledge and belief, this repair or replacement has been performed in accordance with Section XI of the ASME Code. By signing this certificate, neither the Inspector nor his employer makes any warranty, expressed or implied, concerning the repair or replacement in this Report. Furthermore, neither the Inspector nor his employer shall be liable in any manner for any personal injury or property damage or a loss of any kind arising from or connected with this inspection.

[illegible] Commissions 1862 California
Inspector's Signature (State or Province, National Board)

Date June 7, 1991

Note: Supplemental sheets in the form of lists, sketches, or drawings may be used provided (1) size is 8-1/2 in. x 11 in., (2) information in Items 1 through 4 on this data report is included on each sheet, and (3) each sheet is numbered and the number of sheets is recorded at the top of this form.

ASME SECTION XI ABSTRACT
OWNER'S SUMMARY OF REPAIR OR REPLACEMENT

1. **Owner:** Southern California Edison Company
   2244 Walnut Grove Ave., Rosemead, CA 91770

   ASME MO: 88090098

   Unit: 1

2. **Plant:** San Onofre Nuclear Generating Station
   P.O. Box 128, San Clemente, CA 92674-0128

   RS: 276-90 Rev. 1

3. **Work Performed by:** Southern California Edison

   P&ID: 5178206

4. **System Identification:** Main Feedwater

5. **Plant Tag No.:** S1-FWS-412 **Serial No.:** N/A

6. **Component:** Globe Valve **Name:** Rockwell-Edward **Size:** 2"

7. **Code:** ASA B31.1, 1955 Edition **Class:** XI-2

8. **Purpose (Statement of Problem):**

   Valve is damaged beyond repair and requires replacement.

9. **Narrative Summary (Brief Description of Work Performed):**

   The replacement valve was verified to be in compliance with the original construction code as reconciled by SCE material evaluation ME-90-053. Installation of the replacement valve was performed by welding in accordance with SCE approved Weld Record WR1-90-560. A VT-2 examination was conducted in conjunction with a system hydrostatic pressure test at 1720 psig at 68 °F, with no leakage noted.

10. **Material Used:**

    Globe Valve

Prepared By: K.L. Collins **Date:** March 8, 1991

NIS-2
OWNER'S REPORT OF REPAIR OR REPLACEMENT

As Required by the Provisions of ASME Code Section XI

Sheet 1 of 1

1. Owner: Southern California Edison Company
2244 Walnut Grove Ave., Rosemead, CA 91770

ASME MO: SS090098

Unit: 1

2. Plant: San Onofre Nuclear Generating Station
P.O. Box 128, San Clemente, CA 92674-0128

RS: 276-90 Rev. 1

3. Work Performed by: Southern California Edison

P&ID: 5178206

4. System Identification: Main Feedwater

5. (a) Applicable Construction Code: ASA B31.1-1955, Code Classified XI-2, Code Cases: None

(b) Applicable Edition of Section XI Utilized for Repairs or Replacements: 1977 Edition, S'78 Addenda, Code Cases: None

6. Identification of Components Repaired or Replaced:

Name of Component	Name of Manufacturer	Manufacturer Serial No.	National Board No.	Other Identification	Year Built	Repaired, Replaced, or Replacement	ASME Code Stamped Yes/No
2" 600# Globe Valve	Rockwell-Edward	N/A	N/A	S1-FWS-412	N/A	Replaced	No
2" 600# Globe Valve	Rockwell International	AW551	N/A	RSO 2275-90	1977	Replacement	Yes

7. Work Description:

The valve was damaged beyond repair and required replacement. The replacement valve was verified to be in compliance with the original construction code as reconciled by SCE material evaluation ME-90-053. Installation of the replacement valve was performed by welding in accordance with SCE approved Weld Record WR1-90-560. A VT-2 examination was conducted in conjunction with a system hydrostatic pressure test with no leakage noted.

8. Tests Conducted: System Leakage [ ] System Functional [ ] System Inservice [ ] Hydrostatic [X] Pneumatic [ ] Other [ ]
Pressure: 1720 psig Temp: 68 °F

FORM NIS-2 (back)

9. Remarks: None

(Applicable Manufacturer's Data Reports to be attached)

CERTIFICATE OF COMPLIANCE

We certify that the statements made in this report are correct and this replacement (repair or replacement) conforms to the rules of the ASME Code, Section XI.

Signed [signature] (Owner or Owner's Designee) Supvg. ASME Codes Engineer (Title) 11 March (Date) 19 91

CERTIFICATE OF INSPECTION

I, the undersigned holding a valid commission issued by the National Board of Boiler and Pressure Vessel Inspectors and the State or Province of California, employed by Arkwright Mutual Insurance Company (Factory Mutual System) of Norwood, Massachusetts have inspected the components described in this Owner's Report during the period from 09/28/90 to 03/12/91 and state that to the best of my knowledge and belief, this repair or replacement has been performed in accordance with Section XI of the ASME Code. By signing this certificate, neither the Inspector nor his employer makes any warranty, expressed or implied, concerning the repair or replacement in this Report. Furthermore, neither the Inspector nor his employer shall be liable in any manner for any personal injury or property damage or a loss of any kind arising from or connected with this inspection.

[signature] Commissions 1864 California
Inspector's Signature (State or Province, National Board)

Date March 12 19 91

Note: Supplemental sheets in the form of lists, sketches, or drawings may be used provided (1) size is 8-1/2 in. x 11 in., (2) information in Items 1 through 4 on this data report is included on each sheet, and (3) each sheet is numbered and the number of sheets is recorded at the top of this form.

NIS-2
OWNER'S REPORT OF REPAIR OR REPLACEMENT

As Required by the Provisions of ASME Code Section XI

1. Owner: Southern California Edison Company
   2244 Walnut Grove Ave., Rosemead, CA 91770

ASME MO: 89071851

Unit: 1

2. Plant: San Onofre Nuclear Generating Station
   P.O. Box 128, San Clemente, CA 92674-0128

RS: 141-90

3. Work Performed by: Southern California Edison

P&ID: 518205 (C-5)

4. System Identification: Feedwater

5. (a) **Applicable Construction Code:** ANSI B16.34, 1977 Edition, Code Classified XI-2, Code Cases: None

   (b) **Applicable Edition of Section XI Utilized for Repairs or Replacements:** 1977 Edition, S'78 Addenda, Code Cases: None

6. **Identification of Components Repaired or Replaced:**

Name of Component	Name of Manufacturer	Manufacturer Serial No.	National Board No.	Other Identification	Year Built	Repaired, Replaced, or Replacement	ASME Code Stamped Yes/No
12" Check Valve	Atwood-Morrill	N/A	N/A	S1-FWS-438	N/A	---	No
Check Valve Disc	Atwood-Morrill	Et. 24290 Serial No. 3	N/A	RSO 3339-90	N/A	Replacement	No

7. **Work Description:**

Excessive wear was noted on bushing and valve shaft. Per the addressed FCN, the existing valve disc was replaced by a modified valve disc with an extended hammer to minimize fluttering which caused wear to shaft and bushing. The replacement valve disc was verified to be in compliance with the original construction code requirements.

Reference: S5393M & S3594M (Rev. 3), ME-90-076, NCR 90080227

8. **Tests Conducted:** System Leakage [ ] System Functional [X] System Inservice [ ] Hydrostatic [ ] Pneumatic [ ] Other [ ]
   Pressure: 1200 psig Temp: N/A

FORM NIS-2 (back)

9. **Remarks:** None

(Applicable Manufacturer's Data Reports to be attached)

CERTIFICATE OF COMPLIANCE

We certify that the statements made in this report are correct and this replacement (repair or replacement) conforms to the rules of the ASME Code, Section XI.

Signed [signature] (Owner or Owner's Designee) Supvg. ASME Codes Engineer (Title) 23 April 1991 (Date)

CERTIFICATE OF INSPECTION

I, the undersigned holding a valid commission issued by the National Board of Boiler and Pressure Vessel Inspectors and the State or Province of California, employed by Arkwright Mutual Insurance Company (Factory Mutual System) of Norwood, Massachusetts have inspected the components described in this Owner's Report during the period from 7/19/90 to 4/21/91 and state that to the best of my knowledge and belief, this repair or replacement has been performed in accordance with Section XI of the ASME Code. By signing this certificate, neither the Inspector nor his employer makes any warranty, expressed or implied, concerning the repair or replacement in this Report. Furthermore, neither the Inspector nor his employer shall be liable in any manner for any personal injury or property damage or a loss of any kind arising from or connected with this inspection.

[signature] Commissions California 1574
Inspector's Signature (State or Province, National Board)

Date April 24 1991

Note: Supplemental sheets in the form of lists, sketches, or drawings may be used provided (1) size is 8-1/2 in. x 11 in., (2) information in Items 1 through 4 on this data report is included on each sheet, and (3) each sheet is numbered and the number of sheets is recorded at the top of this form.

NIS-2
OWNER'S REPORT OF REPAIR OR REPLACEMENT

As Required by the Provisions of ASME Code Section XI

1. Owner: Southern California Edison Company
   2244 Walnut Grove Ave., Rosemead, CA 91770

ASME MO: 89071852

Unit: 1

2. Plant: San Onofre Nuclear Generating Station
   P.O. Box 128, San Clemente, CA 92674-0128

RS: 142-90

3. Work Performed by: Southern California Edison

P&ID: 5178205 (C-5)

4. System Identification: Feedwater

5. (a) Applicable Construction Code: ANSI B16.34, 1977 Edition, Code Classified XI-2, Code Cases: None

   (b) Applicable Edition of Section XI Utilized for Repairs or Replacements: 1977 Edition, S'78 Addenda, Code Cases: None

6. Identification of Components Repaired or Replaced:

Name of Component	Name of Manufacturer	Manufacturer Serial No.	National Board No.	Other Identification	Year Built	Repaired, Replaced, or Replacement	ASME Code Stamped Yes/No
12" Check Valve	Atwood-Morrill	15487-02	N/A	S1-FWS-349	N/A	---	No
12" Check Valve Disc	Atwood-Morrill	24290-1	N/A	RSO 3339-90 SA-216, Gr WCB	N/A	Replacement	No

7. Work Description:

Per the address Facility Change Notices (FCN's), the existing check valve disc was replaced by a modified check valve disc with an extended hammer to reduce fluttering and wear to the shaft and bushing. The replacement disc was reconciled and verified as meeting the original construction code requirements. A 9/32" diameter thru-hole was drilled thru the disc to meet drawing using previously place disc as a "template".

References: FCN S-5393M & S-5394M (Rev.3), ME-90-77

8. Tests Conducted: System Leakage [ ] System Functional [X] System Inservice [ ] Hydrostatic [ ] Pneumatic [ ] Other [ ]
   Pressure: 1200 psig Temp: N/A

FORM NIS-2 (back)

9. **Remarks:** None

(Applicable Manufacturer's Data Reports to be attached)

CERTIFICATE OF COMPLIANCE

We certify that the statements made in this report are correct and this replacement (repair or replacement) conforms to the rules of the ASME Code, Section XI.

Signed _____ (Owner or Owner's Designee) Supvg. ASME Codes Engineer (Title) 30 April 1991 (Date)

CERTIFICATE OF INSPECTION

I, the undersigned holding a valid commission issued by the National Board of Boiler and Pressure Vessel Inspectors and the State or Province of California, employed by Arkwright Mutual Insurance Company (Factory Mutual System) of Norwood, Massachusetts have inspected the components described in this Owner's Report during the period from 7/25/90 to 4/30/91 and state that to the best of my knowledge and belief, this repair or replacement has been performed in accordance with Section XI of the ASME Code. By signing this certificate, neither the Inspector nor his employer makes any warranty, expressed or implied, concerning the repair or replacement in this Report. Furthermore, neither the Inspector nor his employer shall be liable in any manner for any personal injury or property damage or a loss of any kind arising from or connected with this inspection.

Inspector's Signature _____ Commissions 1862 California (State or Province, National Board)

Date April 30, 1991

Note: Supplemental sheets in the form of lists, sketches, or drawings may be used provided (1) size is 8-1/2 in. x 11 in., (2) information in Items 1 through 4 on this data report is included on each sheet, and (3) each sheet is numbered and the number of sheets is recorded at the top of this form.

NIS-2
OWNER'S REPORT OF REPAIR OR REPLACEMENT

As Required by the Provisions of ASME Code Section XI

1. **Owner:** Southern California Edison Company
   2244 Walnut Grove Ave., Rosemead, CA 91770

2. **Plant:** San Onofre Nuclear Generating Station
   P.O. Box 128, San Clemente, CA 92674-0128

3. **Work Performed by:** Southern California Edison

4. **System Identification:** Feedwater

ASME MO: 91011057

Unit: 1

RS: 017-91

P&ID: 5178206, 5178225

5. (a) **Applicable Construction Code:** ASA B31.1, 1955 Edition, Code Classified XI-2, Code Cases: None

   (b) **Applicable Edition of Section XI Utilized for Repairs or Replacements:** 1977 Edition, S'78 Addenda, Code Cases: None

6. **Identification of Components Repaired or Replaced:**

Name of Component	Name of Manufacturer	Manufacturer Serial No.	National Board No.	Other Identification	Year Built	Repaired, Replaced, or Replacement	ASME Code Stamped Yes/No
2" Blowdown Piping	N/A	N/A	N/A	S1-FWS-342-2"-EG	N/A	Repaired	No
2" Blowdown Piping	N/A	N/A	N/A	S1-FWS-343-2"-EG	N/A	Repaired	No

7. **Work Description:**

NDE Report 1MT-001-91 documented the identification of two (2) 1/16" cracks on Weld BD-4B located on FWS line 342"-EG. NDE Report 1MT-002-91 documents the identification of a 1/16" linear indication of Weld BD-2C located on FWS line 343-2"-EG. The indications were removed by grinding and blending into the surrounding area. An NDE/MT examination was conducted on the repaired areas with no relevant indications noted. The existing weld sizes were measured and found acceptable.

Reference: NCR 91010109

8. **Tests Conducted:** System Leakage [ ] System Functional [ ] System Inservice [ ] Hydrostatic [ ] Pneumatic [ ] Other [ ]
   Pressure: N/A psig Temp: N/A

FORM NIS-2 (back)

9. Remarks: None

(Applicable Manufacturer's Data Reports to be attached)

CERTIFICATE OF COMPLIANCE

We certify that the statements made in this report are correct and this repair (repair or replacement) conforms to the rules of the ASME Code, Section XI.

Signed [signature] (Owner or Owner's Designee) Supvg. ASME Codes Engineer (Title) 13 Feb (Date) 1991

CERTIFICATE OF INSPECTION

I, the undersigned holding a valid commission issued by the National Board of Boiler and Pressure Vessel Inspectors and the State or Province of California, employed by Arkwright Mutual Insurance Company (Factory Mutual System) of Norwood, Massachusetts have inspected the components described in this Owner's Report during the period from 1/22/91 to 2/15/91 and state that to the best of my knowledge and belief, this repair or replacement has been performed in accordance with Section XI of the ASME Code. By signing this certificate, neither the Inspector nor his employer makes any warranty, expressed or implied, concerning the repair or replacement in this Report. Furthermore, neither the Inspector nor his employer shall be liable in any manner for any personal injury or property damage or a loss of any kind arising from or connected with this inspection.

[signature] Commissions 1862 California
Inspector's Signature (State or Province, National Board)

Date February 15, 1991

Note: Supplemental sheets in the form of lists, sketches, or drawings may be used provided (1) size is 8-1/2 in. x 11 in., (2) information in Items 1 through 4 on this data report is included on each sheet, and (3) each sheet is numbered and the number of sheets is recorded at the top of this form.

ASME Section XI Abstract
Owner's Summary of Repair or Replacement

1. Owner: Southern California Edison Company
2244 Walnut Grove Ave.
Rosemead, CA 91770

Traveler: S01-90-037

Unit: 1

2. Plant: San Onofre Nuclear Generating Station
P. O. Box 128, San Clemente, CA 92674-0128

MMP: 1-3642.00BP R/0

3. Work Performed by: Bechtel Construction Co.
P. O. Box 450
San Clemente, CA 92674-0128

CWO: 90112220000
90120818000
90120789000

4. System Identification: Feedwater System (FWS)

P&ID: 5178205

5. Plant Tag No.: See NIS-2

Serial No.: See NIS-2

6. Component: See NIS-2

Name: See NIS-2 Size: 3"

7. Code: XI-2

Class: SR

8. Purpose (Statement of Problem):

MMP 1-3642.00BP modified pipe line S1-FWS-6021-3", adding by-pass around valve S1-FSW-CV-875A.

Associated Drawings: 456527
FIDCN M-7642

9. Narrative Summary (Brief Description of Work Performed):

1. The appropriate documents were reviewed to verify compliance with the applicable Construction Code.

2. Valves, piping and associated hardware were installed I.A.W. MMP-1-3642.00BP and the WR-5/5A weld records A, B, C, D, E, F, G, H, J, K, L, M, N, P, Q, S, T, U, V, W, X, Y, Z, MA, MB, MD, ME, MF, MG, MH, MJ, MK, ML, SA, SB, SC, SD, SE, SF, SG, SH, SJ, SK, SL, SM, SN, and SP.

3. A Bench Hydro Test (on welds SF, S, T, and U) with VT-2 was performed.

4. A System In-Service Leak Test with VT-2 was performed.

10. Material Used: See NIS-2

Prepared by: Les Taylor Date 02/06/91

NIS-2

OWNER'S REPORT OF REPAIR OR REPLACEMENT

As Required by the Provisions of ASME Code Section XI

==========

1. Owner: Southern California Edison Company
2244 Walnut Grove Ave.
Rosemead, CA 91770

Traveler: S01-90-037

Unit: 1

2. Plant: San Onofre Nuclear Generating Station
P. O. Box 128, San Clemente, CA 92674-0128

MMP: 1-3642.00BP R/0

3. Work Performed by: Bechtel Construction Co.
P. O. Box 450
San Clemente, CA 92674-0128

CWO: 90112220000
90120818000
90120789000

4. System Identification: Feedwater System (FWS)

P&ID: 5178205

5. (a) Applicable Construction Code: ASA B31.1, 1955 Ed. for pipe
ASA B16.5, 1957 Ed. for valves

CODE CLASS: XI-2

(b) Applicable Edition of Section XI Utilized for Repairs or Replacements:
1977 Edition, thru S'78 Addenda, Code Cases: N/A

6. Identification of Components Repaired or Replaced:

Name Component	Name of Manufacturer	Manufacturer Serial No.	National Board No.	Other Identification	Year Built	Repaired Replaced, or Replacement	ASME Code Stamped Yes/No
3" pipe Sch. 80 SS	Combustion Engineering	HT #N28974	N/A	RSO #3495-90 Items 1, 2, 6, 8, 10, 19, 32	N/A	Replaced	No
3" Pipe Tee Sch. 80 SS	Custom Alloy Corp.	HT #F7244	N/A	RSO #3495-90 Items 3, 7, 20	N/A	Replaced	No
3" Pipe Flange Sch. 80 SS	Ideal Forging Company	HT #D3569	N/A	RSO #3495-90 Item 4	N/A	Replaced	No
3" Blind Flange Sch. 80 SS	Ideal Forging Company	HT #D3569	N/A	RSO #3495-90 Item 5	N/A	Replaced	No
3" 90° Elbow Sch. 80 SS	Custom Alloy Corp.	HT #F7243	N/A	RSO #3495-90 Items 9, 11, 18	N/A	Replaced	No

7. Work Description:

MMP 1-3642.00BP modified pipe line S1-FWS-6021-3", adding a bypass around valve S1-FWS-CV-875A. Fabricated welds A, B, C, D, E, F, G, H, J, K, L, M, N, P, Q, S, T, U, V, W, X, Y, Z, MA, MB, MD, ME, MF, MG, MH, MJ, MK, SA, SB, SC, SD, SE, SF, SG, SH, SJ, SK, SL, SM, SN and SP. Performed Bench Hydrotest and System In-Service Leak Test.

8. Tests Conducted: System Leakage [ ] System Functional [ ]
System Inservice [X] Hydrostatic [X] Pneumatic [ ] Other [ ]
Pressure: 1690 psig Temp: 62.7°F (Hydro)
Pressure: >1150 psig Temp: 100.6 (System Inservice)

FORM NIS-2 (back)

Remarks:

cumentation for items listed in Block 6 are available onsite.
(Applicable Manufacturer's Data Reports to be attached)

CERTIFICATE OF COMPLIANCE

We certify that the statements made in this report are correct and this replacement conforms to the rules of the ASME Code, Section XI
(Repair or Replacement)

Signed [illegible] Bec Code Eng. 2-21, 1991
(Owner or Owner's Designee) Title (Date)

CERTIFICATE OF INSPECTION

I, the undersigned holding a valid commission issued by the National Board of Boiler and Pressure Vessel Inspectors and the State or Province of California employed by *Arkwright Mutual Insurance Company of Norwood, Massachusetts have inspected the components described in this Owner's Report during the period from 1/10/91 to 2/22/91 and state that to the best of my knowledge and belief, this repair or replacement has been performed in accordance with Section XI of the ASME Code. By signing this certificate, neither the Inspector nor his employer makes any warranty, expressed or implied, concerning the repair or replacement in this Report. Furthermore, neither the Inspector nor his employer shall be liable in any manner for any personal injury or property damage or a loss of any kind arising from or connected with this inspection. *Factory Mutual System

[illegible] Commissions 1862 CA
Inspector's Signature (State or Province, National Board

Date February 22, 1991

Note: Supplemental sheets in form of lists, sketches, or drawings may be used provided (1) size is 8-1/2 in. x 11 in., (2) information in Items 1 through 4 on this data report is included on each sheet is recorded at the top of this form.

1. Owner: Southern California Edison Company
2244 Walnut Grove Ave.
Rosemead, CA 91770

Traveler: S01-90-037

Unit: 1

2. Plant: San Onofre Nuclear Generating Station
P. O. Box 128, San Clemente, CA 92674-0128

MMP: 1-3642.00BP R/0

3. Work Performed by: Bechtel Construction Co.
P. O. Box 450
San Clemente, CA 92674-0128

CWO: 90112220000
90120818000
90120789000

4. System Identification: Feedwater System (FWS)

P&ID: 5178205

Name Component	Name of Manufacturer	Manufacturer Serial No.	National Board No.	Other Identification	Year Built	Repaired Replaced, or Replacement	ASME Code Stamped Yes/No
3"x2" Swage Sch. 80 SS	WFI Nuclear Product, Inc.	HT #956SNA	N/A	RSO #3495-90 Items 15 & 17	N/A	Replaced	No
1/2" Pipe Sch. 160 SS	Teledyne Columbia	HT #AH3413	N/A	RSO #3494-90 Items 21, 28, 37, 41, 46, 50	N/A	Replaced	No
1/2"P x 3/8" Sch. 160 Connector	Parker Hannifin Corp.	HT #400E	N/A	RSO #5045-86 Items 23, 39, 43, 48, 52	N/A	Replaced	No
3/8" Tube Plug	Parker Hannifin Corp.	HT #CCY	N/A	RSO #0820-90 Items 24, 31, 40, 44, 49, 53	N/A	Replaced	No
1/2" Pipe Sch. 80 SS	Teledyne Columbia	HT #AH4481	N/A	RSO #3494-90 Item 25	N/A	Replaced	No
1/2" Pipe Cap 3000# SS	Alloy Stainless Steel	HT #EDN	N/A	RSO #3494-90 Item 26	N/A	Replaced	No
1/2" Half Coupling 6000# SS	WFI Nuclear Product	HT #884SNA	N/A	RSO #3494-90 Item 27	N/A	Replaced	No
1/2"Px3/8"T Connector Sch. 160	Parker Hanifin Corp.	HT #388C	N/A	RSO #0560-84 Item 30	N/A	Replaced	No
7/8" x 6" Stud Bolt	Cardinal Industrial Product, Inc.	H/C #D4	N/A	RSO #3508-90 Item 34	N/A	Replaced	No
7/8" Hex Nut	Texas Bolt Co.	H/C #D8	N/A	RSO #3508-90 Item 35	N/A	Replaced	No
3" Orifice Assembly	Permutit Co.	S/N N5591	N/A	RSO #0052-91 Item 45 RO - 897A	N/A	Replaced	No
3" Orifice Assembly	Permutit Co.	S/N N5587	N/A	RSO #0057-91 Item 54 RO - 897	N/A	Replaced	No

Traveler: S01-90-037

1. Owner: Southern California Edison Company
2244 Walnut Grove Ave.
Rosemead, CA 91770

Unit: 1

2. Plant: San Onofre Nuclear Generating Station
P. O. Box 128, San Clemente, CA 92674-0128

MMP: 1-3642.00BP R/0

3. Work Performed by: Bechtel Construction Co.
P. O. Box 450
San Clemente, CA 92674-0128

CWO: 90112220000
90120818000
90120789000

4. System Identification: Feedwater System (FWS)

P&ID: 5178205

Name Component	Name of Manufacturer	Manufacturer Serial No.	National Board No.	Other Identification	Year Built	Repaired Replaced, or Replacement	ASME Code Stamped Yes/No
1/2" Pipe Plug	Colonial Machine	H/C #GGH	N/A	RSO #1347-90 Item 55	N/A	Replaced	No
2" Gate Valve	Anchor Darling	S/N E3265-20-5	N/A	RSO #2165-90 Item 16 S1-FWS-600	1990	Replaced	Yes
1/2" Globe Valve 1500# SS	Kerotest Co.	S/N ZP49-6	N/A	RSO #2P-47-84 Item 22 S1-FWS-596	1983	Replaced	Yes
1/2" Globe Valve 1500# SS	Kerotest Co.	S/N CAR 20-11	N/A	RSO #4289-85 Item 29 S1-FWS-598	1985	Replaced	Yes
1/2" Globe Valve 1500# SS	Kerotest Co.	S/N CAR 20-15	N/A	RSO #4289-85 Item 38 S1-FWS-602	1985	Replaced	Yes
1/2" Globe Valve 1500# SS	Kerotest Co.	S/N CAR 20-13	N/A	RSO #4289-85 Item 42 S1-FWS-604	1985	Replaced	Yes
1/2" Globe Valve 1500# SS	Kerotest Co.	S/N CAR 20-12	N/A	RSO #1960-86 Item 51 S1-FWS-608	1986	Replaced	Yes
1/2" Globe Valve 1500# SS	Kerotest Co.	S/N CAR 20-8	N/A	RSO #4289-85 Item 47 S1-FWS-606	1985	Replaced	Yes

ASME Section XI Abstract
Owner's Summary of Repair or Replacement

==========

1. Owner: Southern California Edison Company
2244 Walnut Grove Ave.
Rosemead, CA 91770

Traveler: S01-90-038

Unit: 1

2. Plant: San Onofre Nuclear Generating Station
P. O. Box 128, San Clemente, CA 92674-0128

MMP: 1-3642.00BP R/0

3. Work Performed by: Bechtel Construction Co.
P. O. Box 450
San Clemente, CA 92674-0128

CWO: 90112220000
90120789000
90121048000

4. System Identification: Feedwater System (FWS)

P&ID: 5178205

5. Plant Tag No.: See NIS-2

Serial No.: See NIS-2

6. Component: See NIS-2

Name: See NIS-2 Size: 3"

7. Code: XI-2

Class: SR

8. Purpose (Statement of Problem):

MMP 1-3642.00BP modified pipe line S1-FWS-6020-3", adding bypass around valve S1-FWS-CV-875A.

Associated Drawings: 456528
FIDCN M-7655

9. Narrative Summary (Brief Description of Work Performed):

1. The appropriate documents were reviewed to verify compliance with the applicable Construction Code.

2. Valves, piping and associated hardware were installed in accordance with MMP 1-3642.00BP and the WR-5/5A weld records A, B, C, D, E, F, G, H, J, K, L, M, N, P, Q, R, S, T, U, V, W, X, Y, Z, MA, MB, MC, MD, ME, MF, MG, MH, SA, SB, SC, SD, SE, SF, SG, SH, SJ, SK, SL, SM, SN, and SP.

3. A Bench Hydrotest (on welds R, S, Z and SE) with VT-2 was performed.

4. A System In-Service Leak Test with VT-2 was performed.

10. Material Used: See NIS-2

==========

Prepared by: Lester Taylor Date 02/06/91

NIS-2
OWNER'S REPORT OF REPAIR OR REPLACEMENT
As Required by the Provisions of ASME Code Section XI

1. Owner: Southern California Edison Company
2244 Walnut Grove Ave.
Rosemead, CA 91770

Traveler: S01-90-038

Unit: 1

2. Plant: San Onofre Nuclear Generating Station
P. O. Box 128, San Clemente, CA 92674-0128

MMP: 1-3642.00BP

3. Work Performed by: Bechtel Construction Co.
P. O. Box 450
San Clemente, CA 92674-0128

CWO: 90112220000
90120789000
90121048000

4. System Identification: Feedwater System (FWS)

P&ID: 5178205

5. (a) Applicable Construction Code: ASA B31.1, 1955 Ed. for Pipe
ASA B16.5, 1957 Ed. for Valves

Code Class: XI-2

(b) Applicable Edition of Section XI Utilized for Repairs or Replacements:
1977 Edition, thru S'78 Addenda, Code Cases: N/A

6. Identification of Components Repaired or Replaced:

Name Component	Name of Manufacturer	Manufacturer Serial No.	National Board No.	Other Identification	Year Built	Repaired Replaced, or Replacement	ASME Code Stamped Yes/No
3" Pipe Sch. 80 SS	Combustion Engineering	HT #N28974	N/A	RSO #3495-90 Items 1, 2, 6, 9, 34, 35	N/A	Replaced	No
3" Pipe Tee Sch. 80 SS	Custom Alloy Corp.	HT #F7244	N/A	RSO #3495-90 Items 3, 8	N/A	Replaced	No
3" Pipe Flange Sch. 80 SS	Ideal Forging	HT #D3569	N/A	RSO #3495-90 Item 4	N/A	Replaced	No
3" Blind Flange 900# SS	Ideal Forging	HT #D3569	N/A	RSO #3495-90 Item 5	N/A	Replaced	No

7. Work Description:

MMP 1-3642.00BP modified pipe line S1-FWS-6020-3", adding a bypass around valve S1-FWS-CV-875A. Fabricated welds, A, B, C, D, E, F, G, H, J, K, L, M, N, P, Q, R, S, T, U, V, W, X, Y, Z, MA, MB, MC, MD, ME, MF, MG, MH, SA, SB, SC, SD, SE, SF, SG, SH, SJ, SK, SL, SM, SN, and SP. Performed a Bench Hydrotest and System In-service Leak Test.

8. Tests Conducted: System Leakage [ ] System Functional [ ]
System Inservice [X] Hydrostatic [X] Pneumatic [ ] Other [ ]
Pressure: 1690 psig Temp: 62.7°F (Hydro)
Pressure: >1150 psig Temp: 101.0 (System In-service)

FORM NIS-2 (back)

9. Remarks:

Documentation for items listed in Block 6 are available onsite.
(Applicable Manufacturer's Data Reports to be attached)

CERTIFICATE OF COMPLIANCE

We certify that the statements made in this report are correct and this replacement conforms to the rules of the ASME Code, Section XI
(Repair or Replacement)

Signed [illegible] Bec Cntr Mgr. 2-21, 1991
(Owner or Owner's Designee) Title (Date)

CERTIFICATE OF INSPECTION

I, the undersigned holding a valid commission issued by the National Board of Boiler and Pressure Vessel Inspectors and the State or Province of California employed by *Arkwright Mutual Insurance Company of Norwood, Massachusetts have inspected the components described in this Owner's Report during the period from 1/10/91 to 2/22/91 and state that to the best of my knowledge and belief, this repair or replacement has been performed in accordance with Section XI of the ASME Code. By signing this certificate, neither the Inspector nor his employer makes any warranty, expressed or implied, concerning the repair or replacement in this Report. Furthermore, neither the Inspector nor his employer shall be liable in any manner for any personal injury or property damage or a loss of any kind arising from or connected with this inspection. *Factory Mutual System

[illegible] Commissions 1862 CA
Inspector's Signature (State or Province, National Board

Date February 22, 1991

Note: Supplemental sheets in form of lists, sketches, or drawings may be used provided (1) size is 8-1/2 in. x 11 in., (2) information in Items 1 through 4 on this data report is included on each sheet is recorded at the top of this form.

1. Owner: Southern California Edison Company
2244 Walnut Grove Ave.
Rosemead, CA 91770

Traveler: S01-90-038

Unit: 1

2. Plant: San Onofre Nuclear Generating Station
P. O. Box 128, San Clemente, CA 92674-0128

MMP: 1-3642.00BP

3. Work Performed by: Bechtel Construction Co.
P. O. Box 450
San Clemente, CA 92674-0128

CWO: 90112220000
90120818000

4. System Identification: Feedwater System (FWS)

P&ID: 5178205

Name Component	Name of Manufacturer	Manufacturer Serial No.	National Board No.	Other Identification	Year Built	Repaired Replaced, or Replacement	ASME Code Stamped Yes/No
3" S.R. Elbow Sch. 80 SS	Custom Alloy Corp.	HT #F7254	N/A	RSO #3561-90 Item 7	N/A	Replaced	No
3" 90° Elbow Sch. 80 SS	Custom Alloy Corp.	HT #F7243	N/A	RSO #3495-90 Items 10 & 17	N/A	Replaced	No
3" x 2" Swage Sch. 80 SS	WFI Nuclear Product, Inc.	HT #956 SNA	N/A	RSO #3495-90 Items 14 & 16	N/A	Replaced	No
3" Pipe Tee Sch. 80 SS	WFI Nuclear Product, Inc.	HT #1AH	N/A	RSO #3585-90 Item 18	N/A	Replaced	No
1/2" Pipe Sch. 80 SS	Teledyne Columbia	HT #AH4481	N/A	RSO #3494-90 Items 19, 23 & 26	N/A	Replaced	No
1/2"Px3/8"T Sch. 160 Connector	Parker Hannifin Corp.	HT #400E	N/A	RSO #5045-86 Items 21 & 28	N/A	Replaced	No
3/8" Tube Plug	Parker Hannifin Corp.	HT #CCY	N/A	RSO #0820-90 Items 22, 29, 39, 43, 48, 52	N/A	Replaced	No
1/2" Pipe Cap 3000# SS	Alloy Stainless	HT #EDN	N/A	RSO #3494-90 Item 24	N/A	Replaced	No
1/2" Half Coupling 3000# SS	Camco Fitting Co.	HT #EIM	N/A	RSO #3494-90 Item 25	N/A	Replaced	No
7/8"x6-1/2" Stud Bolt	Cardinal Industrial Product, Inc.	H/C #D4	N/A	RSO #3508-90 Item 31	N/A	Replaced	No
1/2" Pipe Sch. 160 SS	Teledyne Columbia	HT #AH3413	N/A	RSO #3494-90 Item 36, 40, 45, 49	N/A	Replaced	No

1. Owner: Southern California Edison Company
2244 Walnut Grove Ave.
Rosemead, CA 91770

Traveler: S01-90-038

Unit: 1

2. Plant: San Onofre Nuclear Generating Station
P. O. Box 128, San Clemente, CA 92674-0128

MMP: 1-3642.00BP

3. Work Performed by: Bechtel Construction Co.
P. O. Box 450
San Clemente, CA 92674-0128

CWO: 90112220000
90120789000
90121048000

4. System Identification:

P&ID: 5178205

Name Component	Name of Manufacturer	Manufacturer Serial No.	National Board No.	Other Identification	Year Built	Repaired Replaced, or Replacement	ASME Code Stamped Yes/No
7/8" Hex Nut	Texas Bolt Co.	H/C #D8	N/A	RSO #3508-90 Item 32	N/A	Replaced	No
1/2"Px3/8"T Sch. 160 Connector	Parker Hannifin Corp.	HT #162C	N/A	RSO #0560-84 Items 38, 42, 47	N/A	Replaced	No
3" Flow Orifice Assembly	Permutit Co.	S/N #N5592	N/A	RSO #0052-91 Item 44 S1-FWS-RO898A	N/A	Replaced	No
1/2"Px3/8"T Sch. 160 Connector	Parker Hannifin Corp.	HT #388C	N/A	RSO #0560-84 Item 51	N/A	Replaced	No
3" Flow Orifice Assembly	Permutit Co.	S/N #N5588	N/A	RSO #0057-91 Item 53 S1-FWS-RO-898	N/A	Replaced	No
1/2" Pipe Plug	Colonial Machine Co.	H/C #GGH	N/A	RSO #1347-90 Item 54	N/A	Replaced	No
2" Globe Valve 1878 # S.S.	Anchor Darling Co.	S/N # E3265-31-2	N/A	RSO #3583-90 Item 15 S1-FWS-599	N/A	Replaced	Yes
1/2" Globe Valve 1500 # S.S.	Kerotest Mfg. Corp.	S/N # OAE-45-5	N/A	RSO #8294-84 Item 20 S1-FWS-595	1981	Replaced	Yes
1/2" Globe Valve 1500 # S.S.	Kerotest Mfg. Corp.	S/N # OAE-45-21	N/A	RSO #8294-84 Item 27 S1-FWS-597	1981	Replaced	Yes
1/2" Globe Valve 1500 # S.S.	Kerotest Mfg. Corp.	S/N # CAR -20-2	N/A	RSO #5024-84 Item 37 S1-FWS-601	1984	Replaced	Yes
1/2" Globe Valve 1500 # S.S.	Kerotest Mfg. Corp.	S/N # CAR-20-6	N/A	RSO #5024-84 Item 41 S1-FWS-603	1984	Replaced	Yes
1/2" Globe Valve 1500 # S.S.	Kerotest Mfg. Corp.	S/N # CAR-20-7	N/A	RSO #5024-84 Item 46 S1-FWS-605	1984	Replaced	Yes
1/2" Globe Valve 1500 # S.S.	Kerotest Mfg. Corp.	S/N # CAR-20-1	N/A	RSO #5024-84 Item 50 S1-FWS-607	1984	Replaced	Yes

NIS-2
OWNER'S REPORT OF REPAIR OR REPLACEMENT

As Required by the Provisions of ASME Code Section XI

Sheet 1 of 1

ASME MO: 89061998

Unit: 1

RS: 037-91

P&ID: 5178205 (E-10)

1. Owner: Southern California Edison Company
   2244 Walnut Grove Ave., Rosemead, CA 91770

2. Plant: San Onofre Nuclear Generating Station
   P.O. Box 128, San Clemente, CA 92674-0128

3. Work Performed by: Southern California Edison

4. System Identification: Feedwater

5. (a) Applicable Construction Code: Westinghouse Equipment Spec. 676044, Code Classified XI-2, Code Cases: None

   (b) Applicable Edition of Section XI Utilized for Repairs or Replacements: 1977 Edition, S'78 Addenda, Code Cases: None

6. Identification of Components Repaired or Replaced:

Name of Component	Name of Manufacturer	Manufacturer Serial No.	National Board No.	Other Identification	Year Built	Repaired, Replaced, or Replacement	ASME Code Stamped Yes/No
3" Globe Valve	Black, Sivall & Bryon	70-71428	N/A	S1-FWS-CV-875B	N/A	Repaired	No

7. Work Description:

   The gasket seating surface of the upper bonnet flange was machined to remove pitting. .015" of metal was removed from the gasket seating surface.

   Reference: NCR 91020076

8. Tests Conducted: System Leakage [ ] System Functional [X] System Inservice [ ] Hydrostatic [ ] Pneumatic [ ] Other [ ]
   Pressure: 1350 psig Temp: N/A °F

FORM NIS-2 (back)

9. **Remarks:** None

(Applicable Manufacturer's Data Reports to be attached)

CERTIFICATE OF COMPLIANCE

We certify that the statements made in this report are correct and this repair (repair or replacement) conforms to the rules of the ASME Code, Section XI.

Signed _____ Supvg. ASME Codes Engineer 29 May 1991
(Owner or Owner's Designee) Title (Date)

CERTIFICATE OF INSPECTION

I, the undersigned holding a valid commission issued by the National Board of Boiler and Pressure Vessel Inspectors and the State or Province of California, employed by Arkwright Mutual Insurance Company (Factory Mutual System) of Norwood, Massachusetts have inspected the components described in this Owner's Report during the period from 2/14/91 to 5/30/91 and state that to the best of my knowledge and belief, this repair or replacement has been performed in accordance with Section XI of the ASME Code. By signing this certificate, neither the Inspector nor his employer makes any warranty, expressed or implied, concerning the repair or replacement in this Report. Furthermore, neither the Inspector nor his employer shall be liable in any manner for any personal injury or property damage or a loss of any kind arising from or connected with this inspection.

_____ Commissions 1862 California
Inspector's Signature (State or Province, National Board)

Date May 30, 1991

Note: Supplemental sheets in the form of lists, sketches, or drawings may be used provided (1) size is 8-1/2 in. x 11 in., (2) information in Items 1 through 4 on this data report is included on each sheet, and (3) each sheet is numbered and the number of sheets is recorded at the top of this form.

NIS-2
OWNER'S REPORT OF REPAIR OR REPLACEMENT

As Required by the Provisions of ASME Code Section XI

Sheet 1 of 1

1. Owner: Southern California Edison Company
2244 Walnut Grove Ave., Rosemead, CA 91770

ASME MO: 89112543

Unit: 1

2. Plant: San Onofre Nuclear Generating Station
P.O. Box 128, San Clemente, CA 92674-0128

RS: 180-90 Rev. 3

P&ID: 5178206

3. Work Performed by: Southern California Edison

4. System Identification: Feedwater

5. (a) Applicable Construction Code: Westinghouse Equipments Specification 675206, Code Classified XI-2, Code Cases: None

(b) Applicable Edition of Section XI Utilized for Repairs or Replacements: 1977 Edition, S'78 Addenda, Code Cases: None

6. Identification of Components Repaired or Replaced:

Name of Component	Name of Manufacturer	Manufacturer Serial No.	National Board No.	Other Identification	Year Built	Repaired, Replaced, or Replacement	ASME Code Stamped Yes/No
8" Control Valve	Fisher Controls	3824151	N/A	S1-FWS-FCV-456	N/A	---	No
Studs (12)	A&G Engineering	QI	N/A	RSO 1722-85 ME-90-041 SA-193, Gr B7	N/A	Replacement	No
Nuts (24)	A&G Engineering	ADD	N/A	RSO 1722-85 ME-90-041 SA-194, Gr 2H	N/A	Replacement	No
8" Valve Plug	Fisher Controls	77826	N/A	RSO 3244-89 ME-90-054 Part# 29A7960X042	N/A	Replacement	No

7. Work Description:

The lower seat/body threads were damaged in the valve body. the damage to the threads were documented as a nonconformance and repaired by cutting oversize threads into the body. A VT-1 examination was performed on the repaired area. New studs and nuts along with the valve internals consisting of a valve plug were replaced. The replacements were verified to be in compliance with the original construction code requirements. No "Code" welding was performed during the performance of this activity.

References: NCR 1-7431, NCR 90090121, ME-90-041 (studs/nuts), ME-90-054 (valve plug)

8. Tests Conducted: System Leakage [ ] System Functional [X] System Inservice [ ] Hydrostatic [ ] Pneumatic [ ] Other [ ]
Pressure: 650 psig Temp: N/A

FORM NIS-2 (back)

9. **Remarks:** None

(Applicable Manufacturer's Data Reports to be attached)

CERTIFICATE OF COMPLIANCE

We certify that the statements made in this report are correct and this replacement (repair or replacement) conforms to the rules of the ASME Code, Section XI.

Signed [signature] (Owner or Owner's Designee) Supvg. ASME Codes Engineer (Title) 17 May 1991 (Date)

CERTIFICATE OF INSPECTION

I, the undersigned holding a valid commission issued by the National Board of Boiler and Pressure Vessel Inspectors and the State or Province of California, employed by Arkwright Mutual Insurance Company (Factory Mutual System) of Norwood, Massachusetts have inspected the components described in this Owner's Report during the period from 7/19/90 to 5/22/91 and state that to the best of my knowledge and belief, this repair or replacement has been performed in accordance with Section XI of the ASME Code. By signing this certificate, neither the Inspector nor his employer makes any warranty, expressed or implied, concerning the repair or replacement in this Report. Furthermore, neither the Inspector nor his employer shall be liable in any manner for any personal injury or property damage or a loss of any kind arising from or connected with this inspection.

[signature] Commissions 1862 California
Inspector's Signature (State or Province, National Board)

Date May 22, 1991

Note: Supplemental sheets in the form of lists, sketches, or drawings may be used provided (1) size is 8-1/2 in. x 11 in., (2) information in Items 1 through 4 on this data report is included on each sheet, and (3) each sheet is numbered and the number of sheets is recorded at the top of this form.

NIS-2

OWNER'S REPORT OF REPAIR OR REPLACEMENT

As Required by the Provisions of ASME Code Section XI

1. **Owner:** Southern California Edison Company
   2244 Walnut Grove Ave., Rosemead, CA 91770

   ASME MO: 90102864

   Unit: 1

2. **Plant:** San Onofre Nuclear Generating Station
   P.O. Box 128, San Clemente, CA 92674-0128

   RS: 353-90

3. **Work Performed by:** Southern California Edison

   P&ID: 5178206 (G-8)

4. **System Identification:** Feedwater

5. (a) **Applicable Construction Code:** Westinghouse Equipment Specification 675206, Code Classified XI-2, Code Cases: None

   (b) **Applicable Edition of Section XI Utilized for Repairs or Replacements:** 1977 Edition, S'78 Addenda, Code Cases: None

6. **Identification of Components Repaired or Replaced:**

Name of Component	Name of Manufacturer	Manufacturer Serial No.	National Board No.	Other Identification	Year Built	Repaired, Replaced, or Replacement	ASME Code Stamped Yes/No
8" Control Valve	Fisher Controls	3824151	N/A	S1-FWS-FCV-456 Model 82102 Type 657 AV	N/A	Repaired	No

7. **Work Description:**

   Pitting in the gasket surfaces of the valve body in the upper and lower cage seating surfaces required machining to correct. The upper and lower cage seating surfaces were machined to remove pitting and surface irregularities. The material removed did not exceed .030" from either surface. A final visual examination was performed on the machined surfaces.

   Reference: NCR 90090121

8. **Tests Conducted:** System Leakage [ ] System Functional [ ] System Inservice [ ] Hydrostatic [ ] Pneumatic [ ] Other [X] (visual examination of machined surfaces only)
   Pressure: N/A psig Temp: N/A

FORM NIS-2 (back)

9. **Remarks:** Reference MO 89112543 for other repairs/replacements and final pressure testing after returning the system to service.

(Applicable Manufacturer's Data Reports to be attached)

CERTIFICATE OF COMPLIANCE

We certify that the statements made in this report are correct and this repair (repair or replacement) conforms to the rules of the ASME Code, Section XI.

Signed [signature] Supvg. ASME Codes Engineer 22 Feb 1991
(Owner or Owner's Designee) Title (Date)

CERTIFICATE OF INSPECTION

I, the undersigned holding a valid commission issued by the National Board of Boiler and Pressure Vessel Inspectors and the State or Province of California, employed by Arkwright Mutual Insurance Company (Factory Mutual System) of Norwood, Massachusetts have inspected the components described in this Owner's Report during the period from 10/24/90 to 02/25/91 and state that to the best of my knowledge and belief, this repair or replacement has been performed in accordance with Section XI of the ASME Code. By signing this certificate, neither the Inspector nor his employer makes any warranty, expressed or implied, concerning the repair or replacement in this Report. Furthermore, neither the Inspector nor his employer shall be liable in any manner for any personal injury or property damage or a loss of any kind arising from or connected with this inspection.

[signature] Commissions 1864 California
Inspector's Signature (State or Province, National Board)

Date Feb 25 1991

Note: Supplemental sheets in the form of lists, sketches, or drawings may be used provided (1) size is 8-1/2 in. x 11 in., (2) information in Items 1 through 4 on this data report is included on each sheet, and (3) each sheet is numbered and the number of sheets is recorded at the top of this form.

NIS-2
OWNER'S REPORT OF REPAIR OR REPLACEMENT

As Required by the Provisions of ASME Code Section XI

1. Owner: Southern California Edison Company
2244 Walnut Grove Ave., Rosemead, CA 91770

ASME MO: 90012626

Unit: 1

2. Plant: San Onofre Nuclear Generating Station
P.O. Box 128, San Clemente, CA 92674-0128

RS: 188-90

3. Work Performed by: Southern California Edison

P&ID: 5178206

4. System Identification: Main Feedwater

5. (a) Applicable Construction Code: ASA B31.1, 1955 Edition/Westinghouse Equipment Specification E675206, Code Classified XI-2, Code Cases: None

(b) Applicable Edition of Section XI Utilized for Repairs or Replacements: 1977 Edition, S'78 Addenda, Code Cases: None

6. Identification of Components Repaired or Replaced:

Name of Component	Name of Manufacturer	Manufacturer Serial No.	National Board No.	Other Identification	Year Built	Repaired, Replaced, or Replacement	ASME Code Stamped Yes/No
8" Flow Control Valve	Fisher	3824152	N/A	S1-FWS-FCV-457	N/A	---	No
Studs (12)	A&G Engineering	Ht. Code "QI"	N/A	RSO 1722-85	N/A	Replacement	No
Nuts (24)	A&G Engineering	Ht. Code "ADD"	N/A	RSO 1722-85	N/A	Replacement	No

7. Work Description:

Replaced bolting material on the lower flange of the valve. This consisted of twelve (12) SA-193, B7 studs and twenty-four (24) SA-194, 2H nuts. Replacement bolting material was verified to be compatible with the installation and system requirements. A VT-2 examination was conducted in conjunction with a system-in-service pressure test.

Reference: ME-90-041, NCR SO1-P-7443, FCN S-4958-M

8. Tests Conducted: System Leakage [ ] System Functional [ ] System Inservice [X] Hydrostatic [ ] Pneumatic [ ] Other [ ]
Pressure: 650 psig Temp: N/A

FORM NIS-2 (back)

9. **Remarks:** None

(Applicable Manufacturer's Data Reports to be attached)

CERTIFICATE OF COMPLIANCE

We certify that the statements made in this report are correct and this replacement (repair or replacement) conforms to the rules of the ASME Code, Section XI.

Signed _____ (Owner or Owner's Designee) Supvg. ASME Codes Engineer (Title) 23 April 1991 (Date)

CERTIFICATE OF INSPECTION

I, the undersigned holding a valid commission issued by the National Board of Boiler and Pressure Vessel Inspectors and the State or Province of California, employed by Arkwright Mutual Insurance Company (Factory Mutual System) of Norwood, Massachusetts have inspected the components described in this Owner's Report during the period from 6/25/90 to 4/21/91 and state that to the best of my knowledge and belief, this repair or replacement has been performed in accordance with Section XI of the ASME Code. By signing this certificate, neither the Inspector nor his employer makes any warranty, expressed or implied, concerning the repair or replacement in this Report. Furthermore, neither the Inspector nor his employer shall be liable in any manner for any personal injury or property damage or a loss of any kind arising from or connected with this inspection.

Inspector's Signature _____ Commissions California 1574 (State or Province, National Board)

Date April 24 1991

Note: Supplemental sheets in the form of lists, sketches, or drawings may be used provided (1) size is 8-1/2 in. x 11 in., (2) information in Items 1 through 4 on this data report is included on each sheet, and (3) each sheet is numbered and the number of sheets is recorded at the top of this form.

NIS-2
OWNER'S REPORT OF REPAIR OR REPLACEMENT

As Required by the Provisions of ASME Code Section XI

Sheet 1 of 1

1. Owner: Southern California Edison Company
2244 Walnut Grove Ave., Rosemead, CA 91770

ASME MO: 90031945 004

Unit: 1

2. Plant: San Onofre Nuclear Generating Station
P.O. Box 128, San Clemente, CA 92674-0128

RS: 238-90
283-90

3. Work Performed by: Southern California Edison

P&ID: 5178205

4. System Identification: Feedwater System

5. (a) Applicable Construction Code: ASA B31.1, 1955 Edition; Code Classified XI-2

(b) Applicable Edition of Section XI Utilized for Repairs or Replacements: 1977 Edition, S'78 Addenda, Code Cases: None

6. Identification of Components Repaired or Replaced:

Name of Component	Name of Manufacturer	Manufacturer Serial No.	National Board No.	Other Identification	Year Built	Repaired, Replaced, or Replacement	ASME Code Stamped Yes/No
Feedwater Pump	Byron Jackson	723306	N/A	S1-FWS-G-3A	N/A	------	No
10" 600# WN Flange, Sch 80 Bore	Radnor Alloys	Heat Code "RIT"	N/A	RSO 2495-90, A105	N/A	Replacement	No
Studs, 1-1/4"- 8, 16 each	A&G Engineering	Heat Code "GXI"	N/A	RSO 1782-89, A193-B7	N/A	Replacement	No
Nuts, 1-1/4" - 8, 32 each	A&G Engineering	Heat Code "HEF"	N/A	RSO 1782-89, A194-2H	N/A	Replacement	No

7. Work Description:

The piping system flange at the pump discharge and the flange bolting were replaced with in kind replacements. Code reconciliations, documented on ME-90-055 (bolting) and ME-90-064 (flange), were performed for the replacements. The welding was performed per WR1-90-573. A radiographic examination was performed on the weld.

8. Tests Conducted: System Leakage [ ] System Functional [1] System Inservice [ ] Hydrostatic [2] Pneumatic [ ] Other [X] VT-2 Exams were performed on both hydro and system functional tests
Pressure: (1) 1190 psig Temp: (1) 305°F
(2) 1060 psig (2) 330°F

FORM NIS-2 (back)

9. Remarks: None

(Applicable Manufacturer's Data Reports to be attached)

CERTIFICATE OF COMPLIANCE

We certify that the statements made in this report are correct and this Replacement conforms to the rules of the ASME Code, Section XI. (repair or replacement)

Signed [illegible] Supvg. ASME Codes Engineer 6/8 19 91
(Owner or Owner's Designee) Title (Date)

CERTIFICATE OF INSPECTION

I, the undersigned holding a valid commission issued by the National Board of Boiler and Pressure Vessel Inspectors and the State or Province of California, employed by Arkwright Mutual Insurance Company (Factory Mutual System) of Norwood, Massachusetts have inspected the components described in this Owner's Report during the period from 9/22/90 to 6/8/91 and state that to the best of my knowledge and belief, this repair or replacement has been performed in accordance with Section XI of the ASME Code. By signing this certificate, neither the Inspector nor his employer makes any warranty, expressed or implied, concerning the repair or replacement in this Report. Furthermore, neither the Inspector nor his employer shall be liable in any manner for any personal injury or property damage or a loss of any kind arising from or connected with this inspection.

[illegible] Commissions 1862 California
Inspector's Signature (State or Province, National Board)

Date June 8, 19 91

Note: Supplemental sheets in the form of lists, sketches, or drawings may be used provided (1) size is 8-1/2 in. x 11 in., (2) information in Items 1 through 4 on this data report is included on each sheet, and (3) each sheet is numbered and the number of sheets is recorded at the top of this form.

NIS-2

OWNER'S REPORT OF REPAIR OR REPLACEMENT

As Required by the Provisions of ASME Code Section XI

Sheet 1 of 1

1. Owner: Southern California Edison Company
2244 Walnut Grove Ave., Rosemead, CA 91770

ASME MO: 90031985

Unit: 1

2. Plant: San Onofre Nuclear Generating Station
P.O. Box 128, San Clemente, CA 92674-0128

RS: 107-90

3. Work Performed by: Southern California Edison

P&ID: 5178205

4. System Identification: Feedwater

5. (a) **Applicable Construction Code:** ASA B31.1, 1955 Edition, Code Classified XI-2, Code Cases: None

(b) **Applicable Edition of Section XI Utilized for Repairs or Replacements:** 1977 Edition, S'78 Addenda, Code Cases: None

6. **Identification of Components Repaired or Replaced:**

Name of Component	Name of Manufacturer	Manufacturer Serial No.	National Board No.	Other Identification	Year Built	Repaired, Replaced, or Replacement	ASME Code Stamped Yes/No
Pipe Flange	N/A	N/A	N/A	S1-FWS-G-3A	N/A	Repaired	No

7. **Work Description:**

A nut welded on a pipe flange located on the discharge side of the pump was removed to allow for the installation of a furminite injection assembly. The nut was removed from the flange by grinding. A satisfactory magnetic particle (MT) examination was conducted on the metal removal area.

8. **Tests Conducted:** System Leakage [ ] System Functional [ ] System Inservice [ ] Hydrostatic [ ] Pneumatic [ ] Other [X] MT Examination
Pressure: N/A psig Temp: N/A °F

FORM NIS-2 (back)

9. Remarks: None

(Applicable Manufacturer's Data Reports to be attached)

CERTIFICATE OF COMPLIANCE

We certify that the statements made in this report are correct and this repair (repair or replacement) conforms to the rules of the ASME Code, Section XI.

Signed [signature] (Owner or Owner's Designee) Supvg. ASME Codes Engineer (Title) 21 Nov (Date) 1990

CERTIFICATE OF INSPECTION

I, the undersigned holding a valid commission issued by the National Board of Boiler and Pressure Vessel Inspectors and the State or Province of California, employed by Arkwright Mutual Insurance Company (Factory Mutual System) of Norwood, Massachusetts have inspected the components described in this Owner's Report during the period from 3/20/90 to 11/23/90 and state that to the best of my knowledge and belief, this repair or replacement has been performed in accordance with Section XI of the ASME Code. By signing this certificate, neither the Inspector nor his employer makes any warranty, expressed or implied, concerning the repair or replacement in this Report. Furthermore, neither the Inspector nor his employer shall be liable in any manner for any personal injury or property damage or a loss of any kind arising from or connected with this inspection.

[signature] – Commissions 1862 California
Inspector's Signature (State or Province, National Board)

Date November 23, 1990

Note: Supplemental sheets in the form of lists, sketches, or drawings may be used provided (1) size is 8-1/2 in. x 11 in., (2) information in Items 1 through 4 on this data report is included on each sheet, and (3) each sheet is numbered and the number of sheets is recorded at the top of this form.

ASME Section XI Abstract
Owner's Summary of Repair or Replacement

---

1. Owner: Southern California Edison Company
2244 Walnut Grove Ave.
Rosemead, CA 91770

Traveler: S01-91-002

Unit: 1

2. Plant: San Onofre Nuclear Generating Station
P. O. Box 128, San Clemente, CA 92674-0128

DCP: 1-3642.00BP

3. Work Performed by: Bechtel Construction Co.
P. O. Box 450
San Clemente, CA 92674-0128

CWO: 91010430000

4. System Identification: Feedwater System (FWS)

P&ID: 5178205

5. Plant Tag No.: S1-FWS-RO-897 & 898 Serial No.: N5587 & N5588

6. Component: Orifice Name: Permutit Size: 3"

7. Code: ASA B-31.1, 1955 Ed. Class: XI-2

8. Purpose (Statement of Problem):

DCP 1-3642.00BP/NCR #W-0006-91 replaces flange studs to provide proper thread engagement.

Associated Drawing: 1810-AA319-D0022-0 (556-34465 Permutit)
NCR #W-0006-91

9. Narrative Summary (Brief Description of Work Performed):

1. NCR #W-0006-91 was reviewed.
2. Flange studs were replaced on S1-FWS-RO-897 & 898.

10. Material Used:

See NIS-2.

Prepared by: L. Taylor Date 01/29/91

NIS-2

OWNER'S REPORT OF REPAIR OR REPLACEMENT

As Required by the Provisions of ASME Code Section XI

==========

1. Owner: Southern California Edison Company
2244 Walnut Grove Ave.
Rosemead, CA 91770

Traveler: S01-91-002

Unit: 1

2. Plant: San Onofre Nuclear Generating Station
P. O. Box 128, San Clemente, CA 92674-0128

DCP: 1-3642.00BP

3. Work Performed by: Bechtel Construction Co.
P. O. Box 450
San Clemente, CA 92674-0128

CWO: 91010430000

4. System Identification: Feedwater System (FWS)

P&ID: 5178205

5. (a) Applicable Construction Code: ASA B31.1, 1955 Ed.

CLASS: XI-2

(b) Applicable Edition of Section XI Utilized for Repairs or Replacements:
1977 Edition, thru S'78 Addenda, Code Cases: N/A

6. Identification of Components Repaired or Replaced:

Name Component	Name of Manufacturer	Manufacturer Serial No.	National Board No.	Other Identification	Year Built	Repaired Replaced, or Replacement	ASME Code Stamped Yes/No
7/8" Dia. Studs	Texas Bolt Co.	HT #JY8	N/A	RSO #1611-84 Item 5	N/A	Replaced	N/A

7. Work Description:

DCP 1-3642.00BP/NCR #W0006-91 replaces flange studs on S1-FWS-R0-897 & 898.

8. Tests Conducted: None

FORM NIS-2 (back)

9. Remarks:

Documentation for items listed in Block 6 are available onsite.
(Applicable Manufacturer's Data Reports to be attached)

CERTIFICATE OF COMPLIANCE

We certify that the statements made in this report are correct and this replacement conforms to the rules of the ASME Code, Section XI
(Repair or Replacement)

Signed [illegible] Fld. Const. Mgr. 2-8, 1991
(Owner or Owner's Designee) Title (Date)

CERTIFICATE OF INSPECTION

I, the undersigned holding a valid commission issued by the National Board of Boiler and Pressure Vessel Inspectors and the State or Province of California employed by *Arkwright Mutual Insurance Company of Norwood, Massachusetts have inspected the components described in this Owner's Report during the period from 1/7/91 to 2/9/91 and state that to the best of my knowledge and belief, this repair or replacement has been performed in accordance with Section XI of the ASME Code. By signing this certificate, neither the Inspector nor his employer makes any warranty, expressed or implied, concerning the repair or replacement in this Report. Furthermore, neither the Inspector nor his employer shall be liable in any manner for any personal injury or property damage or a loss of any kind arising from or connected with this inspection. *Factory Mutual System

[illegible] Commissions 1862 CA
Inspector's Signature (State or Province, National Board

Date February 9, 1991

Note: Supplemental sheets in form of lists, sketches, or drawings may be used provided (1) size is 8-1/2 in. x 11 in., (2) information in Items 1 through 4 on this data report is included on each sheet is recorded at the top of this form.

ASME Section XI Abstract
Owner's Summary of Repair or Replacement

==========

1. Owner: Southern California Edison Company
2244 Walnut Grove Ave.
Rosemead, CA 91770

Traveler: S01-91-001

Unit: 1

2. Plant: San Onofre Nuclear Generating Station
P. O. Box 128, San Clemente, CA 92674-0128

DCP: 1-3642.00BP

3. Work Performed by: Bechtel Construction Co.
P. O. Box 450
San Clemente, CA 92674-0128

CWO: 91010429000

4. System Identification: Feedwater System (FWS)

P&ID: 5178205

5. Plant Tag No.: S1-FWS-RO-897A & 898A Serial No.: N5591 & N5592

6. Component: Orifice Name: Permutit Size: 3"

7. Code: ASA B-31.1, 1955 Ed. Class: XI-2

8. Purpose (Statement of Problem):

DCP 1-3642.00BP/NCR #W-0003-91 replaces flange studs to provide proper thread engagement.

Associated Drawing: 1810-AA319-D0023-0 (556-34476 Permutit)
NCR #W-0003-91

9. Narrative Summary (Brief Description of Work Performed):

1. NCR #W-0003-91 was reviewed.
2. Flange studs were replaced on S1-FWS-RO-897A & 898A.

10. Material Used:

See NIS-2.

==========

Prepared by: L. Taylor Date 01/29/91

NIS-2

OWNER'S REPORT OF REPAIR OR REPLACEMENT

As Required by the Provisions of ASME Code Section XI

==========

1. Owner: Southern California Edison Company
2244 Walnut Grove Ave.
Rosemead, CA 91770

Traveler: S01-91-001

Unit: 1

2. Plant: San Onofre Nuclear Generating Station
P. O. Box 128, San Clemente, CA 92674-0128

DCP: 1-3642.00BP

3. Work Performed by: Bechtel Construction Co.
P. O. Box 450
San Clemente, CA 92674-0128

CWO: 91010429000

4. System Identification: Feedwater System (FWS)

P&ID: 5178205

5. (a) Applicable Construction Code: ASA B31.1, 1955 Ed.

CLASS: XI-2

(b) Applicable Edition of Section XI Utilized for Repairs or Replacements:
1977 Edition, thru S'78 Addenda, Code Cases: N/A

6. Identification of Components Repaired or Replaced:

Name Component	Name of Manufacturer	Manufacturer Serial No.	National Board No.	Other Identification	Year Built	Repaired Replaced, or Replacement	ASME Code Stamped Yes/No
7/8" Dia. Studs	Texas Bolt Co.	HT #JY8	N/A	RSO #1611-84 Item 5	N/A	Replaced	N/A

7. Work Description:

DCP 1-3642.00BP/NCR #W0003-91 replaces flange studs on S1-FWS-R0-897A & 898A.

8. Tests Conducted: None

FORM NIS-2 (back)

9. Remarks:

Documentation for items listed in Block 6 are available onsite.
(Applicable Manufacturer's Data Reports to be attached)

CERTIFICATE OF COMPLIANCE

We certify that the statements made in this report are correct and this replacement conforms to the rules of the ASME Code, Section XI
(Repair or Replacement)

Signed [illegible] FLD. CONST. MGR 2-8, 1991
(Owner or Owner's Designee) Title (Date)

CERTIFICATE OF INSPECTION

I, the undersigned holding a valid commission issued by the National Board of Boiler and Pressure Vessel Inspectors and the State or Province of California employed by *Arkwright Mutual Insurance Company of Norwood, Massachusetts have inspected the components described in this Owner's Report during the period from 1/7/91 to 2/9/91 and state that to the best of my knowledge and belief, this repair or replacement has been performed in accordance with Section XI of the ASME Code. By signing this certificate, neither the Inspector nor his employer makes any warranty, expressed or implied, concerning the repair or replacement in this Report. Furthermore, neither the Inspector nor his employer shall be liable in any manner for any personal injury or property damage or a loss of any kind arising from or connected with this inspection. *Factory Mutual System

[illegible] Commissions 1862 CA
Inspector's Signature (State or Province, National Board

Date February 9, 1991

Note: Supplemental sheets in form of lists, sketches, or drawings may be used provided (1) size is 8-1/2 in. x 11 in., (2) information in Items 1 through 4 on this data report is included on each sheet is recorded at the top of this form.

NIS-2
OWNER'S REPORT OF REPAIR OR REPLACEMENT
As Required by the Provisions of ASME Code Section XI

1. Owner: Southern California Edison Company
2244 Walnut Grove Ave.
Rosemead, CA 91770

Traveler: S01-90-010

Unit: 1

2. Plant: San Onofre Nuclear Generating Station
P. O. Box 128, San Clemente, CA 92672

DCP: 1-3548.00SN

3. Work Performed by: Bechtel Construction Co.
P. O. Box 450
San Clemente, CA 92672

CWO: 90060626000
90060640000

4. System Identification: Letdown System (LDS)

P&ID: 5178130

5. (a) Applicable Construction Code: ASA B16.5, 1957 Ed. for valves Code Class: XI-2
ASA B31.1, 1955 Ed. for piping Code Class: XI-2

(b) Applicable Edition of Section XI Utilized for Repairs or Replacements:
1977 Edition, thru S'78 Addenda, Code Cases: N/A

6. Identification of Components Repaired or Replaced:

Name Component	Name of Manufacturer	Manufacturer Serial No.	National Board No.	Other Identification	Year Built	Repaired Replaced, or Replacement	ASME Code Stamped Yes/No
1" check valve	Anchor Darling	SN #E-B579-1-1	N/A	Item 1 LDS-023 RSO #2154-90	1990	Replacement	NO
1/2" globe Valve	Kerotest Mfg. Corp.	SN #AUK1-2	N/A	Item 2 LDS-024 RSO #1936-90	1990	Replacement	YES
1/2" globe valve	Kerotest Mfg. Corp.	SN #CAR27-22	N/A	Item 3 LDS-025 RSO #1356-89	1989	Replacement	YES
2" gate valve	Anchor Darling	SN #EB267-4-6	N/A	Item 4 LDS-026 RSO #1926-90	1990	Replacement	YES
2" gate valve	Anchor Darling	SN #EB267-4-5	N/A	Item 5 LDS-027 RSO #1926-90	1990	Replacement	YES
2" pipe Sch. 40S	Altech/ Tioga Pipe Supply	HT #9E4063	N/A	Item 6,9,11,12,18,23,29, 30,32,34 RSO #1996-90	N/A	Replacement	NO

7. Work Description:

DCP 1-3548.00SN installs check valve S1-LDS-023 & test connections. Fabricates welds SA, SB, SC, SD, SE, SF, SG, SH, SJ, SK, SL, SM, SN, SP, SQ, SR, SS, ST, SU, SV, SW, SX, SY, SZ, SMA, SMB, SMC, SMD, SME, SMF. Perform system hydrostatic test.

8. Tests Conducted: System Leakage [ ] System Functional [ ]
System Inservice [ ] Hydrostatic [✓] Pneumatic [ ] Other [ ]
Pressure: 648 psig Temp: 84.7°F

FORM NIS-2 (back)

9. *Remarks:

Documentation for items listed in Block 6 are available onsite.
(Applicable Manufacturer's Data Reports to be attached)

CERTIFICATE OF COMPLIANCE

We certify that the statements made in this report are correct and this replacement conforms to the rules of the ASME Code, Section XI
(Repair or Replacement)

Signed ERMyo BCC/PFE Sept 25, 1990
~~(Owner or~~ Owner's Designee) Title (Date)

CERTIFICATE OF INSPECTION

I, the undersigned holding a valid commission issued by the National Board of Boiler and Pressure Vessel Inspectors and the State or Province of California employed by *Arkwright Mutual Insurance Company of Norwood, Massachusetts have inspected the components described in this Owner's Report during the period from 8/3/90 to 9/25/90 and state that to the best of my knowledge and belief, this repair or replacement has been performed in accordance with Section XI of the ASME Code. By signing this certificate, neither the Inspector nor his employer makes any warranty, expressed or implied, concerning the repair or replacement in this Report. Furthermore, neither the Inspector nor his employer shall be liable in any manner for any personal injury or property damage or a loss of any kind arising from or connected with this inspection. *Factory Mutual System

CA Thompson Commissions 1862-CA
Inspector's Signature (State or Province, National Board

Date Sept. 25, 1990

Note: Supplemental sheets in form of lists, sketches, or drawings may be used provided (1) size is 8-1/2 in. x 11 in., (2) information in Items 1 through 4 on this data report is included on each sheet is recorded at the top of this form.

1. Owner: Southern California Edison Company
2244 Walnut Grove Ave.
Rosemead, CA 91770

Traveler: S01-90-010

Unit: 1

2. Plant: San Onofre Nuclear Generating Station
P. O. Box 128, San Clemente, CA 92672

DCP: 1-3548.00SN

3. Work Performed by: Bechtel Construction Co.
P. O. Box 450
San Clemente, CA 92672

CWO: 90060626000
90060640000

4. System Identification: Letdown System (LDS)

P&ID: 5178310

Name Component	Name of Manufacturer	Manufacturer Serial No.	National Board No.	Other Identification	Year Built	Repaired Replaced, or Replacement	ASME Code Stamped Yes/No
2" 90° elbow	Alloy Stainless/ Tioga Pipe Supply	HT #HC	N/A	Item 7,8,10,31,33,35. RSO #1996-90	N/A	Replacement	NO
2" tee	Alloy Stainless/ HUB Inc.	HT #HO	N/A	Item 13 & 28 RSO #2243-90	N/A	Replacement	NO
2" x 1/2" swage	Colonial Machine Co./HUB Inc.	HT #CET	N/A	Item 14 & 27 RSO #2243-90	N/A	Replacment	NO
2" coupling	Alloy Stainless/ HUB Inc.	HT #EHM	N/A	Item 19 & 22 RSO #1996-90	N/A	Replacement	NO
2" x 1" swage	Colonial Machine Co./HUB Inc.	HT #CET	N/A	Item 20 & 21 RSO #2243-90	N/A	Replacement	NO

NIS-2
OWNER'S REPORT OF REPAIR OR REPLACEMENT
As Required by the Provisions of ASME Code Section XI

1. Owner: Southern California Edison Company
2244 Walnut Grove Ave.
Rosemead, CA 91770

Traveler: S01-91-013

Unit: 1

2. Plant: San Onofre Nuclear Generating Station
P. O. Box 128, San Clemente, CA 92674-0128

FCN: F-5518M

3. Work Performed by: Bechtel Construction Co.
P. O. Box 450
San Clemente, CA 92674-0128

CWO: 91020270000
91020496000

4. System Identification: (LDS) Letdown Demin System

P&ID: 5178140

5. (a) Applicable Construction Code: ASA B16.5, 1957 ED. Code Class: XI-2

(b) Applicable Edition of Section XI Utilized for Repairs or Replacements:
1977 Edition, thru S'78 Addenda, Code Cases: N/A

6. Identification of Components Repaired or Replaced:

Name Component	Name of Manufacturer	Manufacturer Serial No.	National Board No.	Other Identification	Year Built	Repaired Replaced, or Replacement	ASME Code Stamped Yes/No
1/2" Plate	Grano Steel Corp.	Heat No. V01003	N/A	RSO# 0147-91	N/A	Replacement	No

7. Work Description:

FCN F-5519M installs a flow direction indicator on valve S1-LDS-CV-526, fabricates welds, TC & TD

8. Tests Conducted: None

FORM NIS-2 (back)

9. Remarks:

Documentation for items listed in Block 6 are available onsite.
(Applicable Manufacturer's Data Reports to be attached)

CERTIFICATE OF COMPLIANCE

We certify that the statements made in this report are correct and this replacement conforms to the rules of the ASME Code, Section XI
(Repair or Replacement)

Signed [illegible] FIELD CONST MGR 3/19, 1991
(Owner or Owner's Designee) Title (Date)

CERTIFICATE OF INSPECTION

I, the undersigned holding a valid commission issued by the National Board of Boiler and Pressure Vessel Inspectors and the State or Province of California employed by *Arkwright Mutual Insurance Company of Norwood, Massachusetts have inspected the components described in this Owner's Report during the period from 2/13/91 to 3/19/91 and state that to the best of my knowledge and belief, this repair or replacement has been performed in accordance with Section XI of the ASME Code. By signing this certificate, neither the Inspector nor his employer makes any warranty, expressed or implied, concerning the repair or replacement in this Report. Furthermore, neither the Inspector nor his employer shall be liable in any manner for any personal injury or property damage or a loss of any kind arising from or connected with this inspection. *Factory Mutual System

[illegible] Commissions 1862 CA
Inspector's Signature (State or Province, National Board

Date March 19, 1991

Note: Supplemental sheets in form of lists, sketches, or drawings may be used provided (1) size is 8-1/2 in. x 11 in., (2) information in Items 1 through 4 on this data report is included on each sheet is recorded at the top of this form.

NIS-2
OWNER'S REPORT OF REPAIR OR REPLACEMENT

As Required by the Provisions of ASME Code Section XI

Sheet 1 of 1

1. Owner: Southern California Edison Company
2244 Walnut Grove Ave., Rosemead, CA 91770

ASME MO: 89111412

Unit: 1

2. Plant: San Onofre Nuclear Generating Station
P.O. Box 128, San Clemente, CA 92674-0128

RS: 712-89

3. Work Performed by: Southern California Edison

P&ID: 5178225

4. System Identification: Main Steam

5. (a) Applicable Construction Code: Pipe: ASA B31.1, 1955 Edition; Valve: ASA B16.5, 1957 Edition, Code Classified XI-2, Code Cases: None

(b) Applicable Edition of Section XI Utilized for Repairs or Replacements: 1977 Edition, S'78 Addenda, Code Cases: None

6. Identification of Components Repaired or Replaced:

Name of Component	Name of Manufacturer	Manufacturer Serial No.	National Board No.	Other Identification	Year Built	Repaired, Replaced, or Replacement	ASME Code Stamped Yes/No
3/4" Globe Valve	Rockwell-Edwards	N/A	N/A	S1-MSS-020	N/A	Replaced	No
3/4" Globe Valve	Rockwell-Edwards	78ADB	N/A	RSO 1770-90 Part# 02610018	N/A	Replacement	No

7. Work Description:

Replaced 3/4" Rockwell-Edwards globe valve by welding. The replacement was verified to be in compliance with the original construction code as reconciled by CR-88-008. The valve was installed by welding. A pre-weld and post-weld NDE/PT was performed on the weld area with no relevant conditions noted.

References: NCR 1-7415-1, WR1-89-852, 1PT-18-90, 1PT-19-90

8. Tests Conducted: System Leakage [ ] System Functional [X] System Inservice [ ] Hydrostatic [ ] Pneumatic [ ] Other [ ]
Pressure: 920 psig Temp: N/A

FORM NIS-2 (back)

9. **Remarks:** None

(Applicable Manufacturer's Data Reports to be attached)

CERTIFICATE OF COMPLIANCE

We certify that the statements made in this report are correct and this replacement (repair or replacement) conforms to the rules of the ASME Code, Section XI.

Signed [illegible] (Owner or Owner's Designee) Supvg. ASME Codes Engineer (Title) 6/6 (Date) 1991

CERTIFICATE OF INSPECTION

I, the undersigned holding a valid commission issued by the National Board of Boiler and Pressure Vessel Inspectors and the State or Province of California, employed by Arkwright Mutual Insurance Company (Factory Mutual System) of Norwood, Massachusetts have inspected the components described in this Owner's Report during the period from 7/5/90 to 6/7/91 and state that to the best of my knowledge and belief, this repair or replacement has been performed in accordance with Section XI of the ASME Code. By signing this certificate, neither the Inspector nor his employer makes any warranty, expressed or implied, concerning the repair or replacement in this Report. Furthermore, neither the Inspector nor his employer shall be liable in any manner for any personal injury or property damage or a loss of any kind arising from or connected with this inspection.

[illegible] Commissions 1862 California
Inspector's Signature (State or Province, National Board)

Date June 7, 1991

Note: Supplemental sheets in the form of lists, sketches, or drawings may be used provided (1) size is 8-1/2 in. x 11 in., (2) information in Items 1 through 4 on this data report is included on each sheet, and (3) each sheet is numbered and the number of sheets is recorded at the top of this form.

NIS-2
OWNER'S REPORT OF REPAIR OR REPLACEMENT

As Required by the Provisions of ASME Code Section XI

Sheet 1 of 1

1. Owner: Southern California Edison Company
2244 Walnut Grove Ave., Rosemead, CA 91770

ASME MO: 90012997

Unit: 1

2. Plant: San Onofre Nuclear Generating Station
P.O. Box 128, San Clemente, CA 92674-0128

RS: 086-90

3. Work Performed by: Southern California Edison

P&ID: 5178225

4. System Identification: Main Steam

5. (a) **Applicable Construction Code:** Bechtel Corp. Spec. BSO-503, Code Classified XI-2, Code Cases: None

(b) **Applicable Edition of Section XI Utilized for Repairs or Replacements:** 1977 Edition, S'78 Addenda, Code Cases: None

6. **Identification of Components Repaired or Replaced:**

Name of Component	Name of Manufacturer	Manufacturer Serial No.	National Board No.	Other Identification	Year Built	Repaired, Replaced, or Replacement	ASME Code Stamped Yes/No
4" Control Valve	BS&B	70-70712	N/A	S1-MSS-CV-76	N/A	---	No
Stem	MUESCO	Ht. 626197-1	N/A	RSO 5155-85 Part 210561	N/A	Replacement	No
Inner Valve	MUESCO	Ht. OA3137-1	N/A	RSO 5703-85 Part 184075	N/A	Replacement	No
Cage	Muesco	Ht. OA2812-2	N/A	RSO 5585-5 Part# 183997	N/A	Replacement	No

7. **Work Description:**

Valve was leaking across seat. Internal valve parts required replacement. The replacement stem and inner valve were verified to be in compliance with the original construction code as reconciled by SCE Material Reconciliation Report ME-90-034. A VT-2 examination was conducted in conjunction with a system functional pressure test.

8. **Tests Conducted:** System Leakage [ ] System Functional [X] System Inservice [ ] Hydrostatic [ ] Pneumatic [ ] Other [ ]
Pressure: 920 psig Temp: N/A

FORM NIS-2 (back)

9. **Remarks:** None

(Applicable Manufacturer's Data Reports to be attached)

CERTIFICATE OF COMPLIANCE

We certify that the statements made in this report are correct and this replacement (repair or replacement) conforms to the rules of the ASME Code, Section XI.

Signed [signature] Supvg. ASME Codes Engineer 4/2 19 91
(Owner or Owner's Designee) Title (Date)

CERTIFICATE OF INSPECTION

I, the undersigned holding a valid commission issued by the National Board of Boiler and Pressure Vessel Inspectors and the State or Province of California, employed by Arkwright Mutual Insurance Company (Factory Mutual System) of Norwood, Massachusetts have inspected the components described in this Owner's Report during the period from 7/8/90 to 4/2/91 and state that to the best of my knowledge and belief, this repair or replacement has been performed in accordance with Section XI of the ASME Code. By signing this certificate, neither the Inspector nor his employer makes any warranty, expressed or implied, concerning the repair or replacement in this Report. Furthermore, neither the Inspector nor his employer shall be liable in any manner for any personal injury or property damage or a loss of any kind arising from or connected with this inspection.

[signature] Commissions 1862 California
Inspector's Signature (State or Province, National Board)

Date April 2, 1991

Note: Supplemental sheets in the form of lists, sketches, or drawings may be used provided (1) size is 8-1/2 in. x 11 in., (2) information in Items 1 through 4 on this data report is included on each sheet, and (3) each sheet is numbered and the number of sheets is recorded at the top of this form.

NIS-2
OWNER'S REPORT OF REPAIR OR REPLACEMENT

As Required by the Provisions of ASME Code Section XI

Sheet 1 of 1

1. Owner: Southern California Edison Company
2244 Walnut Grove Ave., Rosemead, CA 91770

ASME MO: 90020186

Unit: 1

2. Plant: San Onofre Nuclear Generating Station
P.O. Box 128, San Clemente, CA 92674-0128

RS: 085-90

3. Work Performed by: Southern California Edison

P&ID: 5178225

4. System Identification: Main Steam

5. (a) Applicable Construction Code: Bechtel Corp. Spec. BSO-503, Code Classified XI-2, Code Cases: None

(b) Applicable Edition of Section XI Utilized for Repairs or Replacements: 1977 Edition, S'78 Addenda, Code Cases: None

6. Identification of Components Repaired or Replaced:

Name of Component	Name of Manufacturer	Manufacturer Serial No.	National Board No.	Other Identification	Year Built	Repaired, Replaced, or Replacement	ASME Code Stamped Yes/No
4" Control Valve	BS&B	70-70714	N/A	S1-MSS-CV-78	N/A	---	No
Stem	Muesco	Ht. 626197-2	N/A	RSO 5155-85	N/A	Replacement	No
Inner Valve Plug	Muesco	Ht. OA3137-2	N/A	RSO 5703-85	N/A	Replacement	No
Cage	Muesco	Ht. OA2812	N/A	RSO 5155-85	N/A	Replacement	No

7. Work Description:

The subject valve had leakage past the disc seating area. Replaced the valve stem and inner valve plug and seat cage. The replacement items were reconciled by Material Evaluation ME-90-035 as meeting the original construction code (Bechtel Corp Spec. BSO-503). A satisfactory VT-2 examination was conducted in conjunction with a system functional pressure test.

8. Tests Conducted: System Leakage [ ] System Functional [X] System Inservice [ ] Hydrostatic [ ] Pneumatic [ ] Other [ ]
Pressure: 920 psig Temp: N/A

FORM NIS-2 (back)

9. **Remarks:** None

(Applicable Manufacturer's Data Reports to be attached)

CERTIFICATE OF COMPLIANCE

We certify that the statements made in this report are correct and this replacement (repair or replacement) conforms to the rules of the ASME Code, Section XI.

Signed [signature] (Owner or Owner's Designee) Supvg. ASME Codes Engineer (Title) 4/3 (Date) 1991

CERTIFICATE OF INSPECTION

I, the undersigned holding a valid commission issued by the National Board of Boiler and Pressure Vessel Inspectors and the State or Province of California, employed by Arkwright Mutual Insurance Company (Factory Mutual System) of Norwood, Massachusetts have inspected the components described in this Owner's Report during the period from 07/08/90 to 04/07/91 and state that to the best of my knowledge and belief, this repair or replacement has been performed in accordance with Section XI of the ASME Code. By signing this certificate, neither the Inspector nor his employer makes any warranty, expressed or implied, concerning the repair or replacement in this Report. Furthermore, neither the Inspector nor his employer shall be liable in any manner for any personal injury or property damage or a loss of any kind arising from or connected with this inspection.

[signature] Commissions 1864 California
Inspector's Signature (State or Province, National Board)

Date April 7 1991

Note: Supplemental sheets in the form of lists, sketches, or drawings may be used provided (1) size is 8-1/2 in. x 11 in., (2) information in Items 1 through 4 on this data report is included on each sheet, and (3) each sheet is numbered and the number of sheets is recorded at the top of this form.

N-5 # N/A

NIS-2

OWNER'S REPORT OF REPAIR OR REPLACEMENT

As Required by the Provisions of ASME Code Section XI

1. Owner: Southern California Edison Company
2244 Walnut Grove Ave., Rosemead, CA 91770

ASME MO: 90011352 & 90011442
Unit: 1

2. Plant: San Onofre Nuclear Generating Station
P.O. Box 128, San Clemente, CA 92672

RS: 009-90

3. Work Performed by: Southern California Edison

P&ID: 5178225

4. System Identification: MAIN STEAM SYSTEM (MSS)

5. (a) Applicable Construction Code: ASA B31.1-1955 ; Code Classified, Class 2
Code Cases: None
(b) Applicable Edition of Section XI Utilized for Repairs or Replacements:
1977 Edition, S'78 Addenda, Code Cases: None

6. Identification of Components Repaired or Replaced:

Name of Component	Name of Manufacturer	Manufacturer Serial No.	National Board No.	Other Identification	Year Built	Repaired, Replaced, or Replacement	ASME Code Stamped Yes/No
SEAL POT	HOGAN	N/A	N/A	S1-MSS-D-943	N/A	REPAIRED	NO

7. Work Description:
A special repair coupling was machined from round stock after verification of material acceptability (Ref. ME-90-002). The coupling was threaded onto the remaining threads on top of S1-MSS-D-943. The repair coupling was seal welded to S1-MSS-D-943 in accordance with weld record WR1-90-019. A square head pipe plug was verified as meeting the material specification/ construction code (Ref. ME-90-003) and was installed into the repair coupling. A VT-2 examination was performed in conjunction with a system functional pressure test.

REF. NCR SO1-P-7448

8. Tests Conducted: System Leakage [ ] System Functional [X] System Inservice [
Hydrostatic [ ] Pneumatic [ ] Other [ ]
Pressure: 555 psig Temp: N/A °F

FORM NIS-2 (back)

9. Remarks: MATERIAL EVALUATIONS ME-90-002 & 003 PERFORMED TO VERIFY ACCEPTABILITY OF MATERIALS.

(Applicable Manufacturer's Data Reports to be attached)

CERTIFICATE OF COMPLIANCE

We certify that the statements made in this report are correct and this REPAIR (repair or replacement) conforms to the rules of the ASME Code, Section XI.

Signed _____ (Owner or Owner's Designee) Supvg. ASME Codes Engineer (Title) 4/April/1990 (Date)

CERTIFICATE OF INSPECTION

I, the undersigned holding a valid commission issued by the National Board of Boiler and Pressure Vessel Inspectors and the State or Province of California, employed by Arkwright Mutual Insurance Company (Factory Mutual System) of Norwood, Massachusetts have inspected the components described in this Owner's Report during the period from 1/12/90 to 3/28/90 and state that to the best of my knowledge and belief, this repair or replacement has been performed in accordance with Section XI of the ASME Code. By signing this certificate, neither the Inspector nor his employer makes any warranty, expressed or implied, concerning the repair or replacement in this Report. Furthermore, neither the Inspector nor his employer shall be liable in any manner for any personal injury or property damage or a loss of any kind arising from or connected with this inspection.

_____ Inspector's Signature

Commissions 1272 California (State or Province, National Board)

Date 4/5 1990

Note: Supplemental sheets in the form of lists, sketches, or drawings may be used provided (1) size is 8-1/2 in. x 11 in., (2) information in Items 1 through 4 on this data report is included on each sheet, and (3) each sheet is numbered and the number of sheets is recorded at the top of this form.

NIS-2
OWNER'S REPORT OF REPAIR OR REPLACEMENT

As Required by the Provisions of ASME Code Section XI

1. Owner: Southern California Edison Company
2244 Walnut Grove Ave., Rosemead, CA 91770

ASME MO: 90091339
90091545

Unit: 1

2. Plant: San Onofre Nuclear Generating Station
P.O. Box 128, San Clemente, CA 92674-0128

RS: 327-90
328-90

P&ID: 5178226 (B-7)

3. Work Performed by: Southern California Edison

4. System Identification: Main Steam

5. (a) Applicable Construction Code: Manufacturer's Standards, Code Classified XI-2, Code Cases: None

(b) Applicable Edition of Section XI Utilized for Repairs or Replacements: 1977 Edition, S'78 Addenda, Code Cases: None

6. Identification of Components Repaired or Replaced:

Name of Component	Name of Manufacturer	Manufacturer Serial No.	National Board No.	Other Identification	Year Built	Repaired, Replaced, or Replacement	ASME Code Stamped Yes/No
24" Valve	Westinghouse	N/A	N/A	S1-MSS-PV-1650	N/A	Repaired	No

7. Work Description:

1. MO: 90091339 - Steam cutting was found on the disc seating surface. A weld repair was performed and the disc was remachined.

2. MO: 90091545 - A crack approximately 1" by ½" deep was found in the disc hinge pin bore of the valve body. The crack was removed by grinding to sound metal. verification of complete crack removal was obtained using liquid dye penetrant surface examination. A weld repair was made and the hinge pin bore was remachined to proper tolerances. A final surface liquid dye penetrant examination was performed after machined. The Examination results were satisfactory.

Reference: NCR 90090122, WR1-90-691/WR1-90-686

8. Tests Conducted: System Leakage [ ] System Functional [X] System Inservice [ ] Hydrostatic [ ] Pneumatic [ ] Other [ ]
Pressure: 560 psig Temp: N/A

FORM NIS-2 (back)

9. **Remarks:** None

(Applicable Manufacturer's Data Reports to be attached)

CERTIFICATE OF COMPLIANCE

We certify that the statements made in this report are correct and this repair (repair or replacement) conforms to the rules of the ASME Code, Section XI.

Signed _____ (Owner or Owner's Designee) Supvg. ASME Codes Engineer (Title) 6 MAY (Date) 1991

CERTIFICATE OF INSPECTION

I, the undersigned holding a valid commission issued by the National Board of Boiler and Pressure Vessel Inspectors and the State or Province of California, employed by Arkwright Mutual Insurance Company (Factory Mutual System) of Norwood, Massachusetts have inspected the components described in this Owner's Report during the period from 9/28/90 to 4/30/91 and state that to the best of my knowledge and belief, this repair or replacement has been performed in accordance with Section XI of the ASME Code. By signing this certificate, neither the Inspector nor his employer makes any warranty, expressed or implied, concerning the repair or replacement in this Report. Furthermore, neither the Inspector nor his employer shall be liable in any manner for any personal injury or property damage or a loss of any kind arising from or connected with this inspection.

_____ Commissions 1574 California
Inspector's Signature (State or Province, National Board)

Date 5/9 1991

Note: Supplemental sheets in the form of lists, sketches, or drawings may be used provided (1) size is 8-1/2 in. x 11 in., (2) information in Items 1 through 4 on this data report is included on each sheet, and (3) each sheet is numbered and the number of sheets is recorded at the top of this form.

NIS-2
OWNER'S REPORT OF REPAIR OR REPLACEMENT

As Required by the Provisions of ASME Code Section XI

Sheet 1 of 1

1. Owner: Southern California Edison Company
2244 Walnut Grove Ave., Rosemead, CA 91770

ASME MO: 90071545

Unit: 1

2. Plant: San Onofre Nuclear Generating Station
P.O. Box 128, San Clemente, CA 92674-0128

RS: 263-90

3. Work Performed by: Southern California Edison

P&ID: 5178111 (E-10)

4. System Identification: Reactor Coolant

5. (a) Applicable Construction Code: ASA B31.1, 1955 Edition, Code Classified XI-2, Code Cases: None

(b) Applicable Edition of Section XI Utilized for Repairs or Replacements: 1977 Edition, S'78 Addenda, Code Cases: None

6. Identification of Components Repaired or Replaced:

Name of Component	Name of Manufacturer	Manufacturer Serial No.	National Board No.	Other Identification	Year Built	Repaired, Replaced, or Replacement	ASME Code Stamped Yes/No
3/4" Pipe	N/A	N/A	N/A	S1-RCP-2055-3/4"-BH2	N/A	Repaired	No

7. Work Description:

Reactor Coolant Pump "C" was removed for maintenance. To facilitate the pump removal, one existing weld on the referenced line was cut. The cut joint was rewelded in accordance with WR1-90-516. A PT examination was performed on the weld.

8. Tests Conducted: System Leakage [ ] System Functional [X] System Inservice [ ] Hydrostatic [ ] Pneumatic [ ] Other [ ]
Pressure: 2450 psig Temp: N/A

FORM NIS-2 (back)

9. **Remarks:** None

(Applicable Manufacturer's Data Reports to be attached)

CERTIFICATE OF COMPLIANCE

We certify that the statements made in this report are correct and this repair (repair or replacement) conforms to the rules of the ASME Code, Section XI.

Signed [signature] (Owner or Owner's Designee) Supvg. ASME Codes Engineer (Title) 23 April 1991 (Date)

CERTIFICATE OF INSPECTION

I, the undersigned holding a valid commission issued by the National Board of Boiler and Pressure Vessel Inspectors and the State or Province of California, employed by Arkwright Mutual Insurance Company (Factory Mutual System) of Norwood, Massachusetts have inspected the components described in this Owner's Report during the period from 08/07/90 to 04/27/91 and state that to the best of my knowledge and belief, this repair or replacement has been performed in accordance with Section XI of the ASME Code. By signing this certificate, neither the Inspector nor his employer makes any warranty, expressed or implied, concerning the repair or replacement in this Report. Furthermore, neither the Inspector nor his employer shall be liable in any manner for any personal injury or property damage or a loss of any kind arising from or connected with this inspection.

[signature] Commissions 1564 California
Inspector's Signature (State or Province, National Board)

Date April 27 1991

Note: Supplemental sheets in the form of lists, sketches, or drawings may be used provided (1) size is 8-1/2 in. x 11 in., (2) information in Items 1 through 4 on this data report is included on each sheet, and (3) each sheet is numbered and the number of sheets is recorded at the top of this form.

NIS-2
OWNER'S REPORT OF REPAIR OR REPLACEMENT

As Required by the Provisions of ASME Code Section XI

1. Owner: Southern California Edison Company
   2244 Walnut Grove Ave., Rosemead, CA 91770

ASME MO: 90101858

Unit: 1

2. Plant: San Onofre Nuclear Generating Station
   P.O. Box 128, San Clemente, CA 92674-0128

RS: 343-90

3. Work Performed by: Southern California Edison

P&ID: 5178110 (D-2)

4. System Identification: Reactor Coolant

5. (a) Applicable Construction Code: ASA B31.1-1955 Westinghouse E-Specification 675268, Code Classified XI-2, Code Cases: None

   (b) Applicable Edition of Section XI Utilized for Repairs or Replacements: 1977 Edition, S'78 Addenda, Code Cases: None

6. Identification of Components Repaired or Replaced:

Name of Component	Name of Manufacturer	Manufacturer Serial No.	National Board No.	Other Identification	Year Built	Repaired, Replaced, or Replacement	ASME Code Stamped Yes/No
3/4" Globe Valve	Rockwell Edwards	N/A	N/A	S1-RCP-305	N/A	Replaced	No
3/4" Globe Valve	Rockwell International	BL269	N/A	RIP-P-341-82	N/A	Replacement	No

7. Work Description:

The valve currently installed required replacement. The replacement globe valve was verified to be in compliance with the original construction code as reconciled by SCE Code Reconciliation Report CR-88-008. A NDE/PT examination was conducted on the valve weld preparation end prior to installation. Installation of the replacement globe valve was performed by welding. A VT-2 examination was conducted in conjunction with a system functional pressure test.

Reference: WR1-90-724, CR-88-008, NCR 90100111

8. Tests Conducted: System Leakage [ ] System Functional [X] System Inservice [ ] Hydrostatic [ ] Pneumatic [ ] Other [ ]
   Pressure: 2440 psig Temp: N/A

FORM NIS-2 (back)

9. **Remarks:** None

(Applicable Manufacturer's Data Reports to be attached)

CERTIFICATE OF COMPLIANCE

We certify that the statements made in this report are correct and this replacement (repair or replacement) conforms to the rules of the ASME Code, Section XI.

Signed [signature] (Owner or Owner's Designee) Supvg. ASME Codes Engineer (Title) 4/2 (Date) 19 91

CERTIFICATE OF INSPECTION

I, the undersigned holding a valid commission issued by the National Board of Boiler and Pressure Vessel Inspectors and the State or Province of California, employed by Arkwright Mutual Insurance Company (Factory Mutual System) of Norwood, Massachusetts have inspected the components described in this Owner's Report during the period from 10/13/90 to 4/2/91 and state that to the best of my knowledge and belief, this repair or replacement has been performed in accordance with Section XI of the ASME Code. By signing this certificate, neither the Inspector nor his employer makes any warranty, expressed or implied, concerning the repair or replacement in this Report. Furthermore, neither the Inspector nor his employer shall be liable in any manner for any personal injury or property damage or a loss of any kind arising from or connected with this inspection.

[signature] Commissions 1862 California
Inspector's Signature (State or Province, National Board)

Date April 2, 19 91

Note: Supplemental sheets in the form of lists, sketches, or drawings may be used provided (1) size is 8-1/2 in. x 11 in., (2) information in Items 1 through 4 on this data report is included on each sheet, and (3) each sheet is numbered and the number of sheets is recorded at the top of this form.

ASME SECTION XI ABSTRACT
OWNER'S SUMMARY OF REPAIR OR REPLACEMENT

1. **Owner:** Southern California Edison Company
   2244 Walnut Grove Ave., Rosemead, CA 91770

   ASME MO: 90120446

   Unit: 1

2. **Plant:** San Onofre Nuclear Generating Station
   P.O. Box 128, San Clemente, CA 92674-0128

   RS: 388-90

3. **Work Performed by:** Southern California Edison

   P&ID: 5178110 (C-4)

4. **System Identification:** Reactor Coolant

5. **Plant Tag No.:** S1-RCP-315 **Serial No.:** N/A

6. **Component:** Globe Valve **Name:** Rockwell Edwards **Size:** 2"

7. **Code:** Westinghouse E-Spec. 675268 **Class:** XI-2

8. **Purpose (Statement of Problem):**

   The valve requires a stop tab to retain the yoke bushing in a secure position.

9. **Narrative Summary (Brief Description of Work Performed):**

   A 3" x ¼" stainless steel flat bar was attached to the valve by welding to retain the yoke in a secure position. A NDE/PT examination was conducted on the weld repair areas with no relevant indication noted.

   Reference: WR1-90-813

10. **Material Used:**

    None

Prepared By: K.L. Collins **Date:** February 27, 1991

NIS-2
OWNER'S REPORT OF REPAIR OR REPLACEMENT

As Required by the Provisions of ASME Code Section XI

Sheet 1 of 1

ASME MO: 90120446

1. Owner: Southern California Edison Company
   2244 Walnut Grove Ave., Rosemead, CA 91770

Unit: 1

2. Plant: San Onofre Nuclear Generating Station
   P.O. Box 128, San Clemente, CA 92674-0128

RS: 388-90

3. Work Performed by: Southern California Edison

P&ID: 5178110 (C-4)

4. System Identification: Reactor Coolant

5. (a) Applicable Construction Code: Westinghouse E-Specification 675268, Code Classified XI-2, Code Cases: None

   (b) Applicable Edition of Section XI Utilized for Repairs or Replacements: 1977 Edition, S'78 Addenda, Code Cases: None

6. Identification of Components Repaired or Replaced:

Name of Component	Name of Manufacturer	Manufacturer Serial No.	National Board No.	Other Identification	Year Built	Repaired, Replaced, or Replacement	ASME Code Stamped Yes/No
2" Globe Valve	Rockwell Edwards	N/A	N/A	S1-RCP-315	N/A	Repaired	No

7. Work Description:

A 3" x ¼" stainless steel flat bar was attached to the valve by welding to retain the yoke in a secure position. A NDE/PT examination was conducted on the weld repair areas with no relevant indication noted.

Reference: WR1-90-813

8. Tests Conducted: System Leakage [ ] System Functional [X] System Inservice [ ] Hydrostatic [ ] Pneumatic [ ] Other [ ]
   Pressure: 2490 psig Temp: N/A

FORM NIS-2 (back)

9. Remarks: The valve is installed in a Class 2 system.

(Applicable Manufacturer's Data Reports to be attached)

CERTIFICATE OF COMPLIANCE

We certify that the statements made in this report are correct and this repair (repair or replacement) conforms to the rules of the ASME Code, Section XI.

Signed [signature] Supvg. ASME Codes Engineer 11 March 1991
(Owner or Owner's Designee) Title (Date)

CERTIFICATE OF INSPECTION

I, the undersigned holding a valid commission issued by the National Board of Boiler and Pressure Vessel Inspectors and the State or Province of California, employed by Arkwright Mutual Insurance Company (Factory Mutual System) of Norwood, Massachusetts have inspected the components described in this Owner's Report during the period from 12/12/90 to 3/12/91 and state that to the best of my knowledge and belief, this repair or replacement has been performed in accordance with Section XI of the ASME Code. By signing this certificate, neither the Inspector nor his employer makes any warranty, expressed or implied, concerning the repair or replacement in this Report. Furthermore, neither the Inspector nor his employer shall be liable in any manner for any personal injury or property damage or a loss of any kind arising from or connected with this inspection.

[signature] Commissions 1862 California
Inspector's Signature (State or Province, National Board)

Date March 12, 1991

Note: Supplemental sheets in the form of lists, sketches, or drawings may be used provided (1) size is 8-1/2 in. x 11 in., (2) information in Items 1 through 4 on this data report is included on each sheet, and (3) each sheet is numbered and the number of sheets is recorded at the top of this form.

NIS-2
OWNER'S REPORT OF REPAIR OR REPLACEMENT
As Required by the Provisions of ASME Code Section XI

1. Owner: Southern California Edison Company
2244 Walnut Grove Ave.
Rosemead, CA 91770

Traveler: S01-91-014

Unit: 1

2. Plant: San Onofre Nuclear Generating Station
P. O. Box 128, San Clemente, CA 92674-0128

FCN: F-5519M

3. Work Performed by: Bechtel Construction Co.
P. O. Box 450
San Clemente, CA 92674-0128

CWO: 91020270000
91020497000

4. System Identification: (RCP) reactor Coolant Pump System

P&ID: 5178111

5. (a) Applicable Construction Code: ASA B16.5, 1957 ED. Code Class: XI-2

(b) Applicable Edition of Section XI Utilized for Repairs or Replacements:
1977 Edition, thru S'78 Addenda, Code Cases: N/A

6. Identification of Components Repaired or Replaced:

Name Component	Name of Manufacturer	Manufacturer Serial No.	National Board No.	Other Identification	Year Built	Repaired Replaced, or Replacement	ASME Code Stamped Yes/No
1/2" Plate	Grano Steel Corp.	Heat No. V01003	N/A	RSO# 0147-91	N/A	Replacement	No

7. Work Description:

FCN F-5519M installs a flow direction indicator on valve S1-RCP-CV-527, fabricates welds, TA & TB

8. Tests Conducted: None

FORM NIS-2 (back)

9. Remarks:

Documentation for items listed in Block 6 are available onsite.
(Applicable Manufacturer's Data Reports to be attached)

CERTIFICATE OF COMPLIANCE

We certify that the statements made in this report are correct and this replacement conforms to the rules of the ASME Code, Section XI
(Repair or Replacement)

Signed W A Macondray FIELD CONST MGR 3/19, 1991
(Owner or Owner's Designee) Title (Date)

CERTIFICATE OF INSPECTION

I, the undersigned holding a valid commission issued by the National Board of Boiler and Pressure Vessel Inspectors and the State or Province of California employed by *Arkwright Mutual Insurance Company of Norwood, Massachusetts have inspected the components described in this Owner's Report during the period from 2/13/91 to 3/19/91 and state that to the best of my knowledge and belief, this repair or replacement has been performed in accordance with Section XI of the ASME Code. By signing this certificate, neither the Inspector nor his employer makes any warranty, expressed or implied, concerning the repair or replacement in this Report. Furthermore, neither the Inspector nor his employer shall be liable in any manner for any personal injury or property damage or a loss of any kind arising from or connected with this inspection. *Factory Mutual System

Inspector's Signature Commissions 1862 CA
(State or Province, National Board

Date March 19, 1991

Note: Supplemental sheets in form of lists, sketches, or drawings may be used provided (1) size is 8-1/2 in. x 11 in., (2) information in Items 1 through 4 on this data report is included on each sheet is recorded at the top of this form.

NIS-2
OWNER'S REPORT OF REPAIR OR REPLACEMENT

As Required by the Provisions of ASME Code Section XI

Sheet 1 of 1

1. Owner: Southern California Edison Company
2244 Walnut Grove Ave., Rosemead, CA 91770

ASME MO: 90022761

Unit: 1

2. Plant: San Onofre Nuclear Generating Station
P.O. Box 128, San Clemente, CA 92674-0128

RS: 119-90

3. Work Performed by: Southern California Edison

P&ID: 5178110 (G-5)

4. System Identification: Reactor Coolant

5. (a) Applicable Construction Code: Westinghouse E-Spec. 676044, Code Classified: XI-2, Code Cases: None

(b) Applicable Edition of Section XI Utilized for Repairs or Replacements: 1977 Edition, S'78 Addenda, Code Cases: None

6. Identification of Components Repaired or Replaced:

Name of Component	Name of Manufacturer	Manufacturer Serial No.	National Board No.	Other Identification	Year Built	Repaired, Replaced, or Replacement	ASME Code Stamped Yes/No
2" Control Valve	BS&B	70-71395	N/A	S1-RCP-FCV-1115C	N/A	---	No
Valve Stem	Muesco	Ht. A11160	N/A	RSO 6628-85 Part 347265	N/A	Replacement	No
Inner Valve	Muesco	Ht. 181051089	N/A	RSO 1541-86 Part 205804	N/A	Replacement	No

7. Work Description:

The valve required to be overhauled to minimize seat leakage. The stem assembly (stem, inner valve and pin) was replaced. The replacements were verified to be in compliance with the original construction code. After installation, a VT-2 examination was conducted in conjunction with a system functional pressure test.

Reference: NCR SO1-P-7315, ME-90-30

8. Tests Conducted: System Leakage [ ] System Functional [X] System Inservice [ ] Hydrostatic [ ] Pneumatic [ ] Other [ ]
Pressure: 2400 psig Temp: N/A

FORM NIS-2 (back)

9. **Remarks:** None

(Applicable Manufacturer's Data Reports to be attached)

CERTIFICATE OF COMPLIANCE

We certify that the statements made in this report are correct and this replacement (repair or replacement) conforms to the rules of the ASME Code, Section XI.

Signed [signature] (Owner or Owner's Designee) Supvg. ASME Codes Engineer (Title) 4/3 (Date) 19 91

CERTIFICATE OF INSPECTION

I, the undersigned holding a valid commission issued by the National Board of Boiler and Pressure Vessel Inspectors and the State or Province of California, employed by Arkwright Mutual Insurance Company (Factory Mutual System) of Norwood, Massachusetts have inspected the components described in this Owner's Report during the period from 6/4/90 to 3/21/91 and state that to the best of my knowledge and belief, this repair or replacement has been performed in accordance with Section XI of the ASME Code. By signing this certificate, neither the Inspector nor his employer makes any warranty, expressed or implied, concerning the repair or replacement in this Report. Furthermore, neither the Inspector nor his employer shall be liable in any manner for any personal injury or property damage or a loss of any kind arising from or connected with this inspection.

[signature] Commissions 1574 California
Inspector's Signature (State or Province, National Board)

Date April 4 19 91

Note: Supplemental sheets in the form of lists, sketches, or drawings may be used provided (1) size is 8-1/2 in. x 11 in., (2) information in Items 1 through 4 on this data report is included on each sheet, and (3) each sheet is numbered and the number of sheets is recorded at the top of this form.

NIS-2
OWNER'S REPORT OF REPAIR OR REPLACEMENT

As Required by the Provisions of ASME Code Section XI

Sheet 1 of 1

1. Owner: Southern California Edison Company
2244 Walnut Grove Ave., Rosemead, CA 91770

ASME MO: 91020903001

Unit: 1

2. Plant: San Onofre Nuclear Generating Station
P.O. Box 128, San Clemente, CA 92674-0128

RS: 034-91

3. Work Performed by: Southern California Edison

P&ID: 5178111 (C-3)

4. System Identification: Reactor Coolant Pump Seal Water

5. (a) Applicable Construction Code: ASA B31.1, 1955 Edition (piping), Code Classified XI-2, Code Cases: None

(b) Applicable Edition of Section XI Utilized for Repairs or Replacements: 1977 Edition, S'78 Addenda, Code Cases: None

6. Identification of Components Repaired or Replaced:

Name of Component	Name of Manufacturer	Manufacturer Serial No.	National Board No.	Other Identification	Year Built	Repaired, Replaced, or Replacement	ASME Code Stamped Yes/No
1" Rupture Disc	N/A	N/A	N/A	S1-RCP-PSE-11171	N/A	Replaced	No
1" Rupture Disc	Fike	EX1581101	N/A	RSO 0379-91	N/A	Replacement	No

7. Work Description:

The rupture disc was replaced. The replacement was verified as being compatible with the installation and system requirements.

8. Tests Conducted: System Leakage [ ] System Functional [X] System Inservice [ ] Hydrostatic [ ] Pneumatic [ ] Other [ ]
Pressure: 18 psig Temp: N/A

FORM NIS-2 (back)

9. **Remarks:** None

(Applicable Manufacturer's Data Reports to be attached)

CERTIFICATE OF COMPLIANCE

We certify that the statements made in this report are correct and this replacement (repair or replacement) conforms to the rules of the ASME Code, Section XI.

Signed [signature] (Owner or Owner's Designee) Supvg. ASME Codes Engineer (Title) 21 March 1991 (Date)

CERTIFICATE OF INSPECTION

I, the undersigned holding a valid commission issued by the National Board of Boiler and Pressure Vessel Inspectors and the State or Province of California, employed by Arkwright Mutual Insurance Company (Factory Mutual System) of Norwood, Massachusetts have inspected the components described in this Owner's Report during the period from 2/14/91 to 3/21/91 and state that to the best of my knowledge and belief, this repair or replacement has been performed in accordance with Section XI of the ASME Code. By signing this certificate, neither the Inspector nor his employer makes any warranty, expressed or implied, concerning the repair or replacement in this Report. Furthermore, neither the Inspector nor his employer shall be liable in any manner for any personal injury or property damage or a loss of any kind arising from or connected with this inspection.

[signature] Commission 1862 California
Inspector's Signature (State or Province, National Board)

Date March, 1991

Note: Supplemental sheets in the form of lists, sketches, or drawings may be used provided (1) size is 8-1/2 in. x 11 in., (2) information in Items 1 through 4 on this data report is included on each sheet, and (3) each sheet is numbered and the number of sheets is recorded at the top of this form.

NIS-2
OWNER'S REPORT OF REPAIR OR REPLACEMENT

As Required by the Provisions of ASME Code Section XI

Sheet 1 of 1

1. **Owner:** Southern California Edison Company
2244 Walnut Grove Ave., Rosemead, CA 91770

Traveler: S01-91-019

Unit: 1

2. **Plant:** San Onofre Nuclear Generating Station
P.O. Box 128, San Clemente, CA 92674-0128

DCP: 1-3518.00SN

3. **Work Performed by:** Bechtel Construction Company
P.O. Box 450
San Clemente, CA 92674-0128

CWO: 91012230000

P&ID: 5178025

4. **System Identification:** Reactor Coolant Pump Seal Water (RCP)

5. (a) **Applicable Construction Code:** ASA B31.1, 1955 Ed. Code Class: XI-2

(b) **Applicable Edition of Section XI Utilized for Repairs or Replacements:** 1977 Edition, S'78 Addenda, Code Cases: N/A

6. **Identification of Components Repaired or Replaced:**

Name of Component	Name of Manufacturer	Manufacturer Serial No.	National Board No.	Other Identification	Year Built	Repaired, Replaced, or Replacement	ASME Code Stamped Yes/No
Rupture Disk 1" Disk	Fisk	N/A	N/A	RSO #0270-91 S1-RCP-PSE-1117B	N/A	Replaced	No

7. **Work Description:**

DCP 1-3518.00SN & NCR 91010138 replaced rupture disk S1-RCP-PSE-1117B with inkind part and performed a system functional test.

8. **Tests Conducted:** System Leakage [ ] System Functional [✓] System Inservice [ ] Hydrostatic [ ] Pneumatic [ ] Other [ ]
Pressure: 23 psig

FORM NIS-2 (back)

9. **Remarks:** Documentation for items listed in Block 6 are available on site.

(Applicable Manufacturer's Data Reports to be attached)

CERTIFICATE OF COMPLIANCE

We certify that the statements made in this report are correct and this replacement (repair or replacement) conforms to the rules of the ASME Code, Section XI.

Signed [illegible] (Owner or Owner's Designee) Field Construction Mgr (Title) 3/27 1991 (Date)

CERTIFICATE OF INSPECTION

I, the undersigned holding a valid commission issued by the National Board of Boiler and Pressure Vessel Inspectors and the State or Province of California, employed by Arkwright Mutual Insurance Company (Factory Mutual System) of Norwood, Massachusetts have inspected the components described in this Owner's Report during the period from 02/22/91 to 03/29/91 and state that to the best of my knowledge and belief, this repair or replacement has been performed in accordance with Section XI of the ASME Code. By signing this certificate, neither the Inspector nor his employer makes any warranty, expressed or implied, concerning the repair or replacement in this Report. Furthermore, neither the Inspector nor his employer shall be liable in any manner for any personal injury or property damage or a loss of any kind arising from or connected with this inspection.

[illegible] Commissions 1864 California

Inspector's Signature (State or Province, National Board)

Date March 29 1991

Note: Supplemental sheets in the form of lists, sketches, or drawings may be used provided (1) size is 8-1/2 in. x 11 in., (2) information in Items 1 through 6 on this data report is included on each sheet, and (3) each sheet is numbered and the number of sheets is recorded at the top of this form.

NIS-2

OWNER'S REPORT OF REPAIR OR REPLACEMENT

As Required by the Provisions of ASME Code Section XI

1. **Owner:** Southern California Edison Company
   2244 Walnut Grove Ave., Rosemead, CA 91770

   Traveler: S01-91-018

   Unit: 1

2. **Plant:** San Onofre Nuclear Generating Station
   P.O. Box 128, San Clemente, CA 92674-0128

   DCP: 1-3518.00SN

3. **Work Performed by:** Bechtel Construction Company
   P.O. Box 450
   San Clemente, CA 92674-0128

   CWO: 91012241000

   P&ID: 5178025

4. **System Identification:** Reactor Coolant Pump Seal Water (RCP)

5. (a) **Applicable Construction Code:** ASA B31.1, 1955 Ed. Code Class: XI-2

   (b) **Applicable Edition of Section XI Utilized for Repairs or Replacements:** 1977 Edition, S'78 Addenda, Code Cases: None

6. **Identification of Components Repaired or Replaced:**

Name of Component	Name of Manufacturer	Manufacturer Serial No.	National Board No.	Other Identification	Year Built	Repaired, Replaced, or Replacement	ASME Code Stamped Yes/No
Rupture Disk 1" Disk	Fisk	N/A	N/A	S1-RCP-PSE1117B RSO #0270-91	N/A	Replaced	No

7. **Work Description:**

   DCP 1-3518.00SN & NCR 91010138 replaced rupture disk S1-RCP-PSE-1117B with inkind part and performed a system functional test.

8. **Tests Conducted:** System Leakage [ ] System Functional [✓] System Inservice [ ] Hydrostatic [ ] Pneumatic [ ] Other [ ]
   Pressure: 23 psig

FORM NIS-2 (back)

9. **Remarks:** Documentation for items listed in Block 6 are available on site.

(Applicable Manufacturer's Data Reports to be attached)

CERTIFICATE OF COMPLIANCE

We certify that the statements made in this report are correct and this replacement (repair or replacement) conforms to the rules of the ASME Code, Section XI.

Signed [illegible] FIELD CONSTRUCTION MGR 3/27 1991
(Owner or Owner's Designee) Title (Date)

CERTIFICATE OF INSPECTION

I, the undersigned holding a valid commission issued by the National Board of Boiler and Pressure Vessel Inspectors and the State or Province of California, employed by Arkwright Mutual Insurance Company (Factory Mutual System) of Norwood, Massachusetts have inspected the components described in this Owner's Report during the period from 02/22/91 to 03/29/91 and state that to the best of my knowledge and belief, this repair or replacement has been performed in accordance with Section XI of the ASME Code. By signing this certificate, neither the Inspector nor his employer makes any warranty, expressed or implied, concerning the repair or replacement in this Report. Furthermore, neither the Inspector nor his employer shall be liable in any manner for any personal injury or property damage or a loss of any kind arising from or connected with this inspection.

[illegible] Commissions 1864 California
Inspector's Signature (State or Province, National Board)

Date March 29 19 91

Note: Supplemental sheets in the form of lists, sketches, or drawings may be used provided (1) size is 8-1/2 in. x 11 in., (2) information in Items 1 through 6 on this data report is included on each sheet, and (3) each sheet is numbered and the number of sheets is recorded at the top of this form.

NIS-2
OWNER'S REPORT OF REPAIR OR REPLACEMENT

As Required by the Provisions of ASME Code Section XI

Sheet 1 of 1

1. Owner: Southern California Edison Company
2244 Walnut Grove Ave., Rosemead, CA 91770

ASME MO: 90103081

Unit: 1

2. Plant: San Onofre Nuclear Generating Station
P.O. Box 128, San Clemente, CA 92674-0128

RS: 309-90

3. Work Performed by: Southern California Edison

P&ID: 5178130-11 (B-10)

4. System Identification: Residual Heat Removal

5. (a) Applicable Construction Code: ASA B31.1, 1955 Edition, Westinghouse E-Specification 675268, Code Classified XI-2, Code Cases: None

(b) Applicable Edition of Section XI Utilized for Repairs or Replacements: 1977 Edition, S'78 Addenda, Code Cases: None

6. Identification of Components Repaired or Replaced:

Name of Component	Name of Manufacturer	Manufacturer Serial No.	National Board No.	Other Identification	Year Built	Repaired, Replaced, or Replacement	ASME Code Stamped Yes/No
6" Gate Valve	Crane-Aloyco	Model CF8M7B	N/A	S1-RHR-029	N/A	---	No
Disc (Male)	Crosby	A9176	N/A	RSO 3028-90		Replacement	No
Disc (Female)	Crosby	A9177	N/A	RSO 3028-90		Replacement	No

7. Work Description:

Valve leaked past its seat due to galled valve disc and required replacement. The valve disc assembly consists of male (P/N B59CA00125) and female (P/N B59CA00130) assembly. The replacement disc assembly was verified to be in compliance with the original construction code as reconciled by SCE Material Reconciliation Report ME-90-71.

Reference: NCR S01-P-7406

8. Tests Conducted: System Leakage [ ] System Functional [X] System Inservice [ ] Hydrostatic [ ] Pneumatic [ ] Other [ ]
Pressure: 355 psig Temp: N/A

FORM NIS-2 (back)

9. **Remarks:** None

(Applicable Manufacturer's Data Reports to be attached)

CERTIFICATE OF COMPLIANCE

We certify that the statements made in this report are correct and this replacement (repair or replacement) conforms to the rules of the ASME Code, Section XI.

Signed [signature] (Owner or Owner's Designee) Supvg. ASME Codes Engineer (Title) 4/3 (Date) 19 91

CERTIFICATE OF INSPECTION

I, the undersigned holding a valid commission issued by the National Board of Boiler and Pressure Vessel Inspectors and the State or Province of California, employed by Arkwright Mutual Insurance Company (Factory Mutual System) of Norwood, Massachusetts have inspected the components described in this Owner's Report during the period from 10/26/90 to 3/21/91 and state that to the best of my knowledge and belief, this repair or replacement has been performed in accordance with Section XI of the ASME Code. By signing this certificate, neither the Inspector nor his employer makes any warranty, expressed or implied, concerning the repair or replacement in this Report. Furthermore, neither the Inspector nor his employer shall be liable in any manner for any personal injury or property damage or a loss of any kind arising from or connected with this inspection.

[signature] Commissions 1574 California
Inspector's Signature (State or Province, National Board)

Date April 4 19 91

Note: Supplemental sheets in the form of lists, sketches, or drawings may be used provided (1) size is 8-1/2 in. x 11 in., (2) information in Items 1 through 4 on this data report is included on each sheet, and (3) each sheet is numbered and the number of sheets is recorded at the top of this form.

NIS-2

OWNER'S REPORT OF REPAIR OR REPLACEMENT

As Required by the Provisions of ASME Code Section XI

==========

1. Owner: Southern California Edison Company
2244 Walnut Grove Ave., Rosemead, CA 91770

ASME MO: 89070307001

Unit: 1

2. Plant: San Onofre Nuclear Generating Station
P.O. Box 128, San Clemente, CA 92672

RS: 375-89

3. Work Performed by: Southern California Edison

P&ID: 5178130

4. System Identification: Residual Heat Removal

5. (a) Applicable Construction Code: ASME Section VIII, 1962 Ed., Winter 64 Add.
Code Cases: 1270N
(b) Applicable Edition of Section XI Utilized for Repairs or Replacements:
1977 Edition, S'78 Addenda, Code Cases: None

6. Identification of Components Repaired or Replaced:

Name of Component	Name of Manufacturer	Manufacturer Serial No.	National Board No.	Other Identification	Year Built	Repaired, Replaced, or Replacement	ASME Code Stamped Yes/No
Heat Exchanger	EFCO	S-13205-B	N/A	S1-RHR-E-21B	N/A	--------	Yes
Studs SA-193 B7	LTV/Hub	N/A	N/A	Heat Code: B1 Heat #8098719 RSO #1184-89	N/A	Replacement	No
Nuts SA-194 2H	Hamanaka/A&G	N/A	N/A	Heat Code: ADD Heat #D36374 RSO #8370-84	N/A	Replacement	No

7. Work Description:
Heat Exchanger head flange bolting is deteriorated due to boric acid leaks and was replaced.

NCR #SO1-P-7255

8. Tests Conducted: System Leakage [ ] System Functional [X] System Inservice [ ]
Hydrostatic [ ] Pneumatic [ ] Other [ ]
Pressure: 358 psig Temp: N/A °F

FORM NIS-2 (back)

9. Remarks: None

(Applicable Manufacturer's Data Reports to be attached)

CERTIFICATE OF COMPLIANCE

We certify that the statements made in this report are correct and this replacement (repair or replacement) conforms to the rules of the ASME Code, Section XI.

Signed [signature] (Owner or Owner's Designee) Supvg. ASME Codes Engineer (Title) 29 JAN 19 90 (Date)

CERTIFICATE OF INSPECTION

I, the undersigned holding a valid commission issued by the National Board of Boiler and Pressure Vessel Inspectors and the State or Province of California, employed by Arkwright Mutual Insurance Company (Factory Mutual System) of Norwood, Massachusetts have inspected the components described in this Owner's Report during the period from 2/9/89 to 1/25/90 and state that to the best of my knowledge and belief, this repair or replacement has been performed in accordance with Section XI of the ASME Code. By signing this certificate, neither the Inspector nor his employer makes any warranty, expressed or implied, concerning the repair or replacement in this Report. Furthermore, neither the Inspector nor his employer shall be liable in any manner for any personal injury or property damage or a loss of any kind arising from or connected with this inspection.

[signature] Inspector's Signature Commissions 1272 California (State or Province, National Board)

Date 2/5 19 90

Note: Supplemental sheets in the form of lists, sketches, or drawings may be used provided (1) size is 8-1/2 in. x 11 in., (2) information in Items 1 through 4 on this data report is included on each sheet, and (3) each sheet is numbered and the number of sheets is recorded at the top of this form.

NIS-2
OWNER'S REPORT OF REPAIR OR REPLACEMENT

As Required by the Provisions of ASME Code Section XI

Sheet 1 of 1

1. Owner: Southern California Edison Company
2244 Walnut Grove Ave., Rosemead, CA 91770

ASME MO: 88090529

Unit: 1

2. Plant: San Onofre Nuclear Generating Station
P.O. Box 128, San Clemente, CA 92674-0128

RS: 3S2-8S

3. Work Performed by: Southern California Edison

P&ID: 5178130 (B-7)

4. System Identification: Residual Heat Removal

5. (a) Applicable Construction Code: Westinghouse E675198, Code Classified XI-2, Code Cases: None

(b) Applicable Edition of Section XI Utilized for Repairs or Replacements: 1977 Edition, S'78 Addenda, Code Cases: None

6. Identification of Components Repaired or Replaced:

Name of Component	Name of Manufacturer	Manufacturer Serial No.	National Board No.	Other Identification	Year Built	Repaired, Replaced, or Replacement	ASME Code Stamped Yes/No
6" Gate Valve	Crane	N/A	N/A	S1-RHR-MOV-822A	N/A	---	No
Leak-off Plug	Hub	Ht. 1G5935	N/A	RSO 2252-87	N/A	Replacement	No

7. Work Description:

A design change was initiated to allow for the installation of Chesterton live load packing. This required the installation of an unthreaded plug to replace the packing gland leak-off line. The plug material (SA-479, TP316) was verified as being compatible with the installation and system requirements. The plug was machined to proper tolerances and installed by welding. A NDE(PT) examination was conducted on the weld area with no relevant indications noted. After installation a VT-2 examination was conducted at system operating pressure with no leakage noted.

Reference: FCN S5319, WR1-88-906

8. Tests Conducted: System Leakage [ ] System Functional [X] System Inservice [ ] Hydrostatic [ ] Pneumatic [ ] Other [ ]
Pressure: 355 psig Temp: N/A

FORM NIS-2 (back)

9. **Remarks:** None

(Applicable Manufacturer's Data Reports to be attached)

CERTIFICATE OF COMPLIANCE

We certify that the statements made in this report are correct and this replacement (repair or replacement) conforms to the rules of the ASME Code, Section XI.

Signed [signature] (Owner or Owner's Designee) Supvg. ASME Codes Engineer (Title) 30 April (Date) 19 91

CERTIFICATE OF INSPECTION

I, the undersigned holding a valid commission issued by the National Board of Boiler and Pressure Vessel Inspectors and the State or Province of California, employed by Arkwright Mutual Insurance Company (Factory Mutual System) of Norwood, Massachusetts have inspected the components described in this Owner's Report during the period from 3/3/90 to 4/30/91 and state that to the best of my knowledge and belief, this repair or replacement has been performed in accordance with Section XI of the ASME Code. By signing this certificate, neither the Inspector nor his employer makes any warranty, expressed or implied, concerning the repair or replacement in this Report. Furthermore, neither the Inspector nor his employer shall be liable in any manner for any personal injury or property damage or a loss of any kind arising from or connected with this inspection.

[signature] Commissions 1862 California
Inspector's Signature (State or Province, National Board)

Date April 30, 19 91

Note: Supplemental sheets in the form of lists, sketches, or drawings may be used provided (1) size is 8-1/2 in. x 11 in., (2) information in Items 1 through 4 on this data report is included on each sheet, and (3) each sheet is numbered and the number of sheets is recorded at the top of this form.

NIS-2
OWNER'S REPORT OF REPAIR OR REPLACEMENT

As Required by the Provisions of ASME Code Section XI

Sheet 1 of 1

1. Owner: Southern California Edison Company
2244 Walnut Grove Ave., Rosemead, CA 91770

ASME MO: 88100558

Unit: 1

2. Plant: San Onofre Nuclear Generating Station
P.O. Box 128, San Clemente, CA 92674-0128

RS: 383-88

3. Work Performed by: Southern California Edison

P&ID: 5178130 (C-7)

4. System Identification: Residual Heat Removal

5. (a) Applicable Construction Code: Westinghouse E675198, Code Classified XI-2, Code Cases: None

(b) Applicable Edition of Section XI Utilized for Repairs or Replacements: 1977 Edition, S'78 Addenda, Code Cases: None

6. Identification of Components Repaired or Replaced:

Name of Component	Name of Manufacturer	Manufacturer Serial No.	National Board No.	Other Identification	Year Built	Repaired, Replaced, or Replacement	ASME Code Stamped Yes/No
6" Gate Valve	Crane	N/A	N/A	S1-RHR-MOV-822B	N/A	---	No
1" Plug	H&D Steel	Ht. 98249	N/A	RSO 1601-90	N/A	Replacement	No

7. Work Description:

A design change was initiated to allow for the installation of Chesterton live load packing. This required the installation of an unthreaded plug to replace the packing gland leak-off line. The plug material (SA-479, TP316) was verified as being compatible with the installation and system requirements. The plug was machined to proper tolerances and installed by welding. A NDE(PT) examination was conducted on the weld area with no relevant indications noted. After installation a VT-2 examination was conducted at system operating pressure with no leakage noted.

Reference: FCN S5319, WR1-88-907

8. Tests Conducted: System Leakage [ ] System Functional [X] System Inservice [ ] Hydrostatic [ ] Pneumatic [ ] Other [ ]
Pressure: 355 psig Temp: N/A

FORM NIS-2 (back)

9. **Remarks:** None

(Applicable Manufacturer's Data Reports to be attached)

CERTIFICATE OF COMPLIANCE

We certify that the statements made in this report are correct and this replacement (repair or replacement) conforms to the rules of the ASME Code, Section XI.

Signed [signature] (Owner or Owner's Designee) Supvg. ASME Codes Engineer (Title) 30 April (Date) 1991

CERTIFICATE OF INSPECTION

I, the undersigned holding a valid commission issued by the National Board of Boiler and Pressure Vessel Inspectors and the State or Province of California, employed by Arkwright Mutual Insurance Company (Factory Mutual System) of Norwood, Massachusetts have inspected the components described in this Owner's Report during the period from 6/6/90 to 4/30/90 and state that to the best of my knowledge and belief, this repair or replacement has been performed in accordance with Section XI of the ASME Code. By signing this certificate, neither the Inspector nor his employer makes any warranty, expressed or implied, concerning the repair or replacement in this Report. Furthermore, neither the Inspector nor his employer shall be liable in any manner for any personal injury or property damage or a loss of any kind arising from or connected with this inspection.

[signature] Commissions 1862 California
Inspector's Signature (State or Province, National Board)

Date April 30, 1991

Note: Supplemental sheets in the form of lists, sketches, or drawings may be used provided (1) size is 8-1/2 in. x 11 in., (2) information in Items 1 through 4 on this data report is included on each sheet, and (3) each sheet is numbered and the number of sheets is recorded at the top of this form.

NIS-2
OWNER'S REPORT OF REPAIR OR REPLACEMENT

As Required by the Provisions of ASME Code Section XI

Sheet 1 of 1

1. Owner: Southern California Edison Company
2244 Walnut Grove Ave., Rosemead, CA 91770

ASME MO: 90081960001

Unit: 1

2. Plant: San Onofre Nuclear Generating Station
P.O. Box 128, San Clemente, CA 92674-0128

RS: 331-90

3. Work Performed by: Southern California Edison

P&ID: 5178150 (B-3)

4. System Identification: Reactor Cycle Sampling

5. (a) Applicable Construction Code: Westinghouse Equipment Specification 676044, Code Classifed XI-2, Code Cases: None

(b) Applicable Edition of Section XI Utilized for Repairs or Replacements: 1977 Edition, S'78 Addenda, Code Cases: None

6. Identification of Components Repaired or Replaced:

Name of Component	Name of Manufacturer	Manufacturer Serial No.	National Board No.	Other Identification	Year Built	Repaired, Replaced, or Replacement	ASME Code Stamped Yes/No
Globe Valve #1500	Mason-Neilan	G-12431-1-2	N/A	S1-RSS-CV-953	N/A	---	No
Stem/Disc Assembly	Mason-Neilan	Ht. 822426-4	N/A	RIP# P-506-81 316 SS/#6 Stellite	N/A	Replacement	No

7. Work Description:

The stem/plug assembly of the valve was replaced with an in-kind replacement. The valve was reassembled in accordance with procedure SO1-I-6.59.

8. Tests Conducted: System Leakage [ ] System Functional [X] System Inservice [ ] Hydrostatic [ ] Pneumatic [ ] Other [ ]
Pressure: 2085 psig Temp: 648 °F

FORM NIS-2 (back)

9. **Remarks:** None

(Applicable Manufacturer's Data Reports to be attached)

CERTIFICATE OF COMPLIANCE

We certify that the statements made in this report are correct and this replacement (repair or replacement) conforms to the rules of the ASME Code, Section XI.

Signed _____ Supvg. ASME Codes Engineer 23 April 1991
(Owner or Owner's Designee) Title (Date)

CERTIFICATE OF INSPECTION

I, the undersigned holding a valid commission issued by the National Board of Boiler and Pressure Vessel Inspectors and the State or Province of California, employed by Arkwright Mutual Insurance Company (Factory Mutual System) of Norwood, Massachusetts have inspected the components described in this Owner's Report during the period from 10/2/90 to 4/20/91 and state that to the best of my knowledge and belief, this repair or replacement has been performed in accordance with Section XI of the ASME Code. By signing this certificate, neither the Inspector nor his employer makes any warranty, expressed or implied, concerning the repair or replacement in this Report. Furthermore, neither the Inspector nor his employer shall be liable in any manner for any personal injury or property damage or a loss of any kind arising from or connected with this inspection.

_____ Commissions California 1574
Inspector's Signature (State or Province, National Board)

Date April 24 1991

Note: Supplemental sheets in the form of lists, sketches, or drawings may be used provided (1) size is 8-1/2 in. x 11 in., (2) information in Items 1 through 4 on this data report is included on each sheet, and (3) each sheet is numbered and the number of sheets is recorded at the top of this form.

NIS-2

OWNER'S REPORT OF REPAIR OR REPLACEMENT

As Required by the Provisions of ASME Code Section XI

1. Owner: Southern California Edison Company
2244 Walnut Grove Ave., Rosemead, CA 91770

Traveler: ASME MO

Unit: 1

2. Plant: San Onofre Nuclear Generating Station
P.O. Box 128, San Clemente, CA 92672

MERS: 309-89

3. Work Performed by: Southern California Edison

M.O.: 89051750

4. System Identification: Reactor Cycle Sampling System (RSS)

P&ID: 5178150-7 (E-3)

5. (a) Applicable Construction Code: Westinghouse E-Spec. 676044; ASA B31.1 - 1955 Edition Code Cases: N/A Code Classified: XI-2
(b) Applicable Edition of Section XI Utilized for Repairs or Replacements: 1977 Edition, S'78 Addenda, Code Cases: N/A

6. Identification of Components Repaired or Replaced:

Name of Component	Name of Manufacturer	Manufacturer Serial No.	National Board No.	Other Identification	Year Built	Repaired, Replaced, or Replacement	ASME Code Stamped Yes/No
5/8" Studs (6)	N/A	N/A	N/A	S1-RSS-CV-955	-----	Replaced	No
5/8" Nuts (6)	N/A	N/A	N/A	S1-RSS-CV-955	-----	Replaced	No
3.8".065 Wall Tubing	N/A	N/A	N/A	RSS-5026-3/4"-BH2	-----	Replaced	No
5/8" Studs (6)	B&G Mfg.	Ht. No. 57038 Mark "AJM" P/N 971511 - 012-158	N/A	RSO-0743-88	-----	Replacement	No
5/8" Nuts (6)	Masonelian	P/N 971511-0660187	N/A	RSO=0759-88	-----	Replacement	No
3/8" OD x .065 MW Smis Tube	Sandvik	Ht. No 460342	N/A	RSS-5026-3/4"-BH2/RSO-1760-89	1989	Replacement	No

7. Work Description:
1. Verified replacement studs, nuts and tubing meets the original design/construction code.
2. Removed S1-RSS-CV-955 from system per WR1-89-403.
3. Removed existing studs and nuts from valve body and installed replacement studs.
4. Reinstalled S1-RSS-CV-955 back into system per WR1-89-403.
5. Performed post-weld NDE (PT).
6. Installed replacement nuts.
7. Performed System Functional Pressure Test with VT-2 Examination.

REFERENCE: NCR's SO1-P-7245 & SO1-P-7260; ME-89-034

8. Tests Conducted: System Leakage [ ] System Functional [x] System Inservice [ ]
Hydrostatic [ ] Pneumatic [ ] Other [ ]
Pressure: 2080 psig Temp: 540°F

FORM NIS-2 (back)

9. Remarks: None

(Applicable Manufacturer's Data Reports to be attached)

CERTIFICATE OF COMPLIANCE

We certify that the statements made in this report are correct and this Replacement conforms to the rules of the ASME Code, Section XI.
(repair or replacement)

Signed [signature] (Supvg. ASME Codes Engineer) 7/5 1989
(Owner or Owner's Designee) Title (Date)

CERTIFICATE OF INSPECTION

I, the undersigned holding a valid commission issued by the National Board of Boiler and Pressure Vessel Inspectors and the State or Province of California, employed by Arkwright Mutual Insurance Company (Factory Mutual System) of Norwood, Massachusetts have inspected the components described in this Owner's Report during the period from 6/8/89 to 7/5/89 and state that to the best of my knowledge and belief, this repair or replacement has been performed in accordance with Section XI of the ASME Code. By signing this certificate, neither the Inspector nor his employer makes any warranty, expressed or implied, concerning the repair or replacement in this Report. Furthermore, neither the Inspector nor his employer shall be liable in any manner for any personal injury or property damage or a loss of any kind arising from or connected with this inspection.

[signature] Commissions 1272 California
Inspector's Signature (State or Province, National Board)

Date 7/5 1989

Note: Supplemental sheets in the form of lists, sketches, or drawings may be used provided (1) size is 8-1/2 in. x 11 in., (2) information in Items 1 through 4 on this data report is included on each sheet, and (3) each sheet is numbered and the number of sheets is recorded at the top of this form.

NIS-2
OWNER'S REPORT OF REPAIR OR REPLACEMENT

As Required by the Provisions of ASME Code Section XI

Sheet 1 of 1

1. Owner: Southern California Edison Company
2244 Walnut Grove Ave., Rosemead, CA 91770

ASME MO: 89101012

Unit: 1

2. Plant: San Onofre Nuclear Generating Station
P.O. Box 128, San Clemente, CA 92674-0128

RS: 265-90

3. Work Performed by: Southern California Edison

P&ID: 5178150 (D-3)

4. System Identification: Reactor Cycle Sampling

5. (a) Applicable Construction Code: Westinghouse E-spec 676044, Code Classified XI-2, Code Cases: None

(b) Applicable Edition of Section XI Utilized for Repairs or Replacements: 1977 Edition, S'78 Addenda, Code Cases: None

6. Identification of Components Repaired or Replaced:

Name of Component	Name of Manufacturer	Manufacturer Serial No.	National Board No.	Other Identification	Year Built	Repaired, Replaced, or Replacement	ASME Code Stamped Yes/No
3/8" Control Valve	Masoneilan	N/A	N/A	S1-RSS-CV-955	N/A	---	No
Stem/Plug	Masoneilan	Et. 1810-6-1024	N/A	RIP P-506-81	N/A	Replacement	No

7. Work Description:

During disassembly and inspection, it was discovered that the stem/plug assembly required replacement. Replaced valve stem/plug. The replacement was verified to be in compliance with the original construction code. After assembly a system functional pressure test was performed with a VT-2 examination with no leakage noted.

8. Tests Conducted: System Leakage [ ] System Functional [X] System Inservice [ ] Hydrostatic [ ] Pneumatic [ ] Other [ ]
Pressure: 2080 psig Temp: N/A

FORM NIS-2 (back)

9. Remarks: None

(Applicable Manufacturer's Data Reports to be attached)

CERTIFICATE OF COMPLIANCE

We certify that the statements made in this report are correct and this replacement (repair or replacement) conforms to the rules of the ASME Code, Section XI.

Signed _____ (Owner or Owner's Designee) Supvg. ASME Codes Engineer (Title) 21 March (Date) 19 91

CERTIFICATE OF INSPECTION

I, the undersigned holding a valid commission issued by the National Board of Boiler and Pressure Vessel Inspectors and the State or Province of California, employed by Arkwright Mutual Insurance Company (Factory Mutual System) of Norwood, Massachusetts have inspected the components described in this Owner's Report during the period from 8/17/90 to 3/21/91 and state that to the best of my knowledge and belief, this repair or replacement has been performed in accordance with Section XI of the ASME Code. By signing this certificate, neither the Inspector nor his employer makes any warranty, expressed or implied, concerning the repair or replacement in this Report. Furthermore, neither the Inspector nor his employer shall be liable in any manner for any personal injury or property damage or a loss of any kind arising from or connected with this inspection.

_____ Commissions 1862 California
Inspector's Signature (State or Province, National Board)

Date March 21, 19 91

Note: Supplemental sheets in the form of lists, sketches, or drawings may be used provided (1) size is 8-1/2 in. x 11 in., (2) information in Items 1 through 4 on this data report is included on each sheet, and (3) each sheet is numbered and the number of sheets is recorded at the top of this form.

ASME Section XI Abstract
Owner's Summary of Repair or Replacement

---

1. Owner: Southern California Edison Company
2244 Walnut Grove Ave.
Rosemead, CA 91770

Traveler: S01-90-039

Unit: 1

2. Plant: San Onofre Nuclear Generating Station
P. O. Box 128, San Clemente, CA 92672

FCN: F5437M

3. Work Performed by: Bechtel Construction Co.
P. O. Box 450
San Clemente, CA 92672

CWO: 90121592000
90121076000

4. System Identification: Reactor Cycle Sampling System (RSS) P&ID: 5178150

5. Plant Tag No.: S1-RSS-CV-956 Serial No.: N/A

6. Component: (See NIS-2) Name: (See NIS-2) Size: 3/8"

7. Code: ASA B31.1, 1955 Ed. Class: XI-2

8. Purpose (Statement of Problem):

FCN F5437M replaced 3/8" tubing between TEE (DWG #714478 Item 603) and Adaptor (DWG: 714478 Item 600). Reference NCR 90120078-00.

Associated DWGs: 714478

9. Narrative Summary (Brief Description of Work Performed):

1.) The appropriate documents were reviewed to verify compliance with the applicable construction code.

2.) Tubing was replaced in accordance with FCN F5437M and in accordance with the WR-5A weld records SG and SH.

3.) A system hydrostatic test with VT-2 was performed.

10. Material Used:

See NIS-2

Prepared by: Les Taylor Date 02/05/91

NIS-2

OWNER'S REPORT OF REPAIR OR REPLACEMENT

As Required by the Provisions of ASME Code Section XI

1. Owner: Southern California Edison Company
2244 Walnut Grove Ave.
Rosemead, CA 91770

Traveler: S01-90-039

Unit: 1

2. Plant: San Onofre Nuclear Generating Station
P. O. Box 128, San Clemente, CA 92672

FCN: F5437M

3. Work Performed by: Bechtel Construction Co.
P. O. Box 450
San Clemente, CA 92672

CWO: 90121592000
90121076000

4. System Identification:

P&ID: 5178150

5. (a) Applicable Construction Code: ASA B31.1, 1955 Ed., Code Class: XI-2

(b) Applicable Edition of Section XI Utilized for Repairs or Replacements:
1977 Edition, thru S'78 Addenda, Code Cases: N/A

6. Identification of Components Repaired or Replaced:

Name Component	Name of Manufacturer	Manufacturer Serial No.	National Board No.	Other Identification	Year Built	Repaired Replaced, or Replacement	ASME Code Stamped Yes/No
3/8" X .065 Tube	Plymouth Tube Co.	HT #TV3130	N/A	Item #605 RSO #4996-86	N/A	Replacement	No

7. Work Description:

FCN F5437M replaces 3/8" tubing between Tee (DWG #714478, Item 603) and adapter (DWG. #714478, Item 600) and adaptor (DWG #714478, Item 600); Fabricates welds SG and SH; performs system hydrostatic test.

8. Tests Conducted: System Leakage [ ] System Functional [ ]
System Inservice [ ] Hydrostatic [x] Pneumatic [ ] Other [ ]
Pressure: 3125 psig Temp: 66 °F

FORM NIS-2 (back)

9. Remarks:

Documentation for items listed in Block 6 are available onsite.
(Applicable Manufacturer's Data Reports to be attached)

CERTIFICATE OF COMPLIANCE

We certify that the statements made in this report are correct and this replacement conforms to the rules of the ASME Code, Section XI
(Repair or Replacement)

Signed [illegible] Fin. Const. Mgr 2-8, 1991
(Owner or Owner's Designee) Title (Date)

CERTIFICATE OF INSPECTION

I, the undersigned holding a valid commission issued by the National Board of Boiler and Pressure Vessel Inspectors and the State or Province of California employed by *Arkwright Mutual Insurance Company of Norwood, Massachusetts have inspected the components described in this Owner's Report during the period from 12/21/90 to 2/9/91 and state that to the best of my knowledge and belief, this repair or replacement has been performed in accordance with Section XI of the ASME Code. By signing this certificate, neither the Inspector nor his employer makes any warranty, expressed or implied, concerning the repair or replacement in this Report. Furthermore, neither the Inspector nor his employer shall be liable in any manner for any personal injury or property damage or a loss of any kind arising from or connected with this inspection. *Factory Mutual System

[illegible] Commissions 1862 CA
Inspector's Signature (State or Province, National Board

Date February 9, 1991

Note: Supplemental sheets in form of lists, sketches, or drawings may be used provided (1) size is 8-1/2 in. x 11 in., (2) information in Items 1 through 4 on this data report is included on each sheet is recorded at the top of this form.

ASME Section XI Abstract
Owner's Summary of Repair or Replacement

1. Owner: Southern California Edison Company
2244 Walnut Grove Ave.
Rosemead, CA 91770

Traveler: S01-90-036

Unit: 1

2. Plant: San Onofre Nuclear Generating Station
P. O. Box 128, San Clemente, CA 92672

FCN F5389M

3. Work Performed by: Bechtel Construction Co.
P. O. Box 450
San Clemente, CA 92672

CWO: 90121592000
90111183000

4. System Identification: Reactor Cycle Sampling System (RSS) P&ID: 5178150

5. Plant Tag No.: S1-RSS-CV-956 Serial No.: N/A

6. Component: (See NIS-2) Name: (See NIS-2) Size: 3/8"

7. Code: ASA B31.1, 1955 Ed. Class: XI-2

8. Purpose (Statement of Problem):

FCN F5389M Relocated Valve S1-RSS-CV-956

Associated Dwgs.: 714478

9. Narrative Summary (Brief Description of Work Performed):

1.) The appropriate documents were reviewed to verify compliance with the applicable construction code.

2.) Valve S1-RSS-CV-956 was relocated in accordance with FCN F5389M and in accordance with the WR-5A weld records, SC, SD, SE & SF.

3.) A system hydrostatic test with VT-2 was performed.

10. Material Used:

See NIS-2

Prepared by: Les Taylor Date 02/05/91

NIS-2
OWNER'S REPORT OF REPAIR OR REPLACEMENT
As Required by the Provisions of ASME Code Section XI

==========

1. Owner: Southern California Edison Company
2244 Walnut Grove Ave.
Rosemead, CA 91770

Traveler: S01-90-036

Unit: 1

2. Plant: San Onofre Nuclear Generating Station
P. O. Box 128, San Clemente, CA 92672

FCN: F5389M

3. Work Performed by: Bechtel Construction Co.
P. O. Box 450
San Clemente, CA 92672

CWO: 90121592000
90111183000

4. System Identification:

P&ID: 5178150

5. (a) Applicable Construction Code: ASA B31.1, 1955 Ed., Code Class: XI-2

(b) Applicable Edition of Section XI Utilized for Repairs or Replacements:
1977 Edition, thru S'78 Addenda, Code Cases: N/A

6. Identification of Components Repaired or Replaced:

Name Component	Name of Manufacturer	Manufacturer Serial No.	National Board No.	Other Identification	Year Built	Repaired Replaced, or Replacement	ASME Code Stamped Yes/No
3/8" Tube Union	Parker Hannifin Co.	HT # 7600	N/A	Item #604 RSO #3471-90	N/A	Replace	No

7. Work Description:

FCN F5389M relocates valve S1-RSS-CV-956; fabricates welds SC, SD, SE and SF; Performs sytem hydrostatic test.

8. Tests Conducted: System Leakage [ ] System Functional [ ]
System Inservice [ ] Hydrostatic [X] Pneumatic [ ] Other [ ]
Pressure: 3125 psig Temp: 66 °F

FORM NIS-2 (back)

9. **Remarks:**

Documentation for items listed in Block 6 are available onsite.
(Applicable Manufacturer's Data Reports to be attached)

CERTIFICATE OF COMPLIANCE

We certify that the statements made in this report are correct and this replacement conforms to the rules of the ASME Code, Section XI
(Repair or Replacement)

Signed [illegible] FLD. CONST. MGR. 2-9, 1991
(Owner or Owner's Designee) Title (Date)

CERTIFICATE OF INSPECTION

I, the undersigned holding a valid commission issued by the National Board of Boiler and Pressure Vessel Inspectors and the State or Province of California employed by *Arkwright Mutual Insurance Company of Norwood, Massachusetts have inspected the components described in this Owner's Report during the period from 12/21/~~90~~90 to 2/9/91 and state that to the best of my knowledge and belief, this repair or replacement has been performed in accordance with Section XI of the ASME Code. By signing this certificate, neither the Inspector nor his employer makes any warranty, expressed or implied, concerning the repair or replacement in this Report. Furthermore, neither the Inspector nor his employer shall be liable in any manner for any personal injury or property damage or a loss of any kind arising from or connected with this inspection. *Factory Mutual System

[illegible] Commissions 1862 CA
Inspector's Signature (State or Province, National Board

Date February 9, 1991

Note: Supplemental sheets in form of lists, sketches, or drawings may be used provided (1) size is 8-1/2 in. x 11 in., (2) information in Items 1 through 4 on this data report is included on each sheet is recorded at the top of this form.

NIS-2

OWNER'S REPORT OF REPAIR OR REPLACEMENT

As Required by the Provisions of ASME Code Section XI

1. Owner: Southern California Edison Company
   2244 Walnut Grove Ave., Rosemead, CA 91770

ASME MO: 90050986

Unit: 1

2. Plant: San Onofre Nuclear Generating Station
   P.O. Box 128, San Clemente, CA 92674-0128

RS: 217-90

3. Work Performed by: Southern California Edison

P&ID: 5178270 (H-3)

4. System Identification: Secondary Chemical Feed

5. (a) Applicable Construction Code: ASA B31.1, 1955 Edition, Code Classified XI-2, Code Cases: None

   (b) Applicable Edition of Section XI Utilized for Repairs or Replacements: 1977 Edition, S'78 Addenda, Code Cases: None

6. Identification of Components Repaired or Replaced:

Name of Component	Name of Manufacturer	Manufacturer Serial No.	National Board No.	Other Identification	Year Built	Repaired, Replaced, or Replacement	ASME Code Stamped Yes/No
½" Check Valve	Parker Hannifin	N/A	N/A	S1-SCF-358	N/A	Replaced	No
½" Check Valve	Parker Hannifin	81673	N/A	RSO 1864-90 Ht. 1BAN	N/A	Replacement	No

7. Work Description:

The ½" Nupro check valve was replaced per FCN S5177M. The replacement valve was reconciled with the original construction code.

References: NCR 9005005701, FCN S5177M, CR-90-001

8. Tests Conducted: System Leakage [ ] System Functional [X] System Inservice [ ] Hydrostatic [ ] Pneumatic [ ] Other [ ]
   Pressure: 915 psig Temp: N/A

FORM NIS-2 (back)

9. **Remarks:** None

(Applicable Manufacturer's Data Reports to be attached)

CERTIFICATE OF COMPLIANCE

We certify that the statements made in this report are correct and this replacement (repair or replacement) conforms to the rules of the ASME Code, Section XI.

Signed [signature] Supvg. ASME Codes Engineer 4/2 1991
(Owner or Owner's Designee) Title (Date)

CERTIFICATE OF INSPECTION

I, the undersigned holding a valid commission issued by the National Board of Boiler and Pressure Vessel Inspectors and the State or Province of California, employed by Arkwright Mutual Insurance Company (Factory Mutual System) of Norwood, Massachusetts have inspected the components described in this Owner's Report during the period from 7/19/90 to 4/2/91 and state that to the best of my knowledge and belief, this repair or replacement has been performed in accordance with Section XI of the ASME Code. By signing this certificate, neither the Inspector nor his employer makes any warranty, expressed or implied, concerning the repair or replacement in this Report. Furthermore, neither the Inspector nor his employer shall be liable in any manner for any personal injury or property damage or a loss of any kind arising from or connected with this inspection.

[signature] Commissions 1862 California
Inspector's Signature (State or Province, National Board)

Date April 2, 1991

Note: Supplemental sheets in the form of lists, sketches, or drawings may be used provided (1) size is 8-1/2 in. x 11 in., (2) information in Items 1 through 4 on this data report is included on each sheet, and (3) each sheet is numbered and the number of sheets is recorded at the top of this form.

NIS-2

OWNER'S REPORT OF REPAIR OR REPLACEMENT

As Required by the Provisions of ASME Code Section XI

Sheet 1 of 1

ASME MO: 90052123

Unit: 1

RS: 218-90

P&ID: 5178270

1. Owner: Southern California Edison Company
   2244 Walnut Grove Ave., Rosemead, CA 91770

2. Plant: San Onofre Nuclear Generating Station
   P.O. Box 128, San Clemente, CA 92674-0128

3. Work Performed by: Southern California Edison

4. System Identification: Secondary Chemical Feed

5. (a) Applicable Construction Code: ASA B31.1, 1955 Edition, Code Classified XI-2, Code Cases: None

   (b) Applicable Edition of Section XI Utilized for Repairs or Replacements: 1977 Edition, S'78 Addenda, Code Cases: None

6. Identification of Components Repaired or Replaced:

Name of Component	Name of Manufacturer	Manufacturer Serial No.	National Board No.	Other Identification	Year Built	Repaired, Replaced, or Replacement	ASME Code Stamped Yes/No
½" Check Valve	Circle Seal	N/A	N/A	S1-SCF-359	N/A	Replaced	No
½" Check Valve	Parker Hannifin	81672	N/A	RSO 1864-90 Bt. 1BAN	N/A	Replacement	No

7. Work Description:

   The check valve was replaced per FCN S5176M. The replacement valve was reconciled with the original construction code requirements.

   Reference: FCN S5176M, CR-90-001

8. Tests Conducted: System Leakage [ ] System Functional [X] System Inservice [ ] Hydrostatic [ ] Pneumatic [ ] Other [ ]
   Pressure: 915 psig Temp: N/A

FORM NIS-2 (back)

9. Remarks: None

(Applicable Manufacturer's Data Reports to be attached)

CERTIFICATE OF COMPLIANCE

We certify that the statements made in this report are correct and this replacement (repair or replacement) conforms to the rules of the ASME Code, Section XI.

Signed [signature] (Owner or Owner's Designee) Supvg. ASME Codes Engineer (Title) 4/2 (Date) 1991

CERTIFICATE OF INSPECTION

I, the undersigned holding a valid commission issued by the National Board of Boiler and Pressure Vessel Inspectors and the State or Province of California, employed by Arkwright Mutual Insurance Company (Factory Mutual System) of Norwood, Massachusetts have inspected the components described in this Owner's Report during the period from 7/19/90 to 4/2/91 and state that to the best of my knowledge and belief, this repair or replacement has been performed in accordance with Section XI of the ASME Code. By signing this certificate, neither the Inspector nor his employer makes any warranty, expressed or implied, concerning the repair or replacement in this Report. Furthermore, neither the Inspector nor his employer shall be liable in any manner for any personal injury or property damage or a loss of any kind arising from or connected with this inspection.

[signature] Commissions 1862 California
Inspector's Signature (State or Province, National Board)

Date April 2, 1991

Note: Supplemental sheets in the form of lists, sketches, or drawings may be used provided (1) size is 8-1/2 in. x 11 in., (2) information in Items 1 through 4 on this data report is included on each sheet, and (3) each sheet is numbered and the number of sheets is recorded at the top of this form.

NIS-2

OWNER'S REPORT OF REPAIR OR REPLACEMENT

As Required by the Provisions of ASME Code Section XI

Sheet 1 of 1

1. Owner: Southern California Edison Company
2244 Walnut Grove Ave., Rosemead, CA 91770

ASME MO: 90050985

Unit: 1

2. Plant: San Onofre Nuclear Generating Station
P.O. Box 128, San Clemente, CA 92674-0128

RS: 219-90

3. Work Performed by: Southern California Edison

P&ID: 5178270

4. System Identification: Secondary Chemical Feed

5. (a) Applicable Construction Code: ASA B31.1, 1955 Edition, Code Classified XI-2, Code Cases: None

(b) Applicable Edition of Section XI Utilized for Repairs or Replacements: 1977 Edition, S'78 Addenda, Code Cases: None

6. Identification of Components Repaired or Replaced:

Name of Component	Name of Manufacturer	Manufacturer Serial No.	National Board No.	Other Identification	Year Built	Repaired, Replaced, or Replacement	ASME Code Stamped Yes/No
½" Check Valve	Kerotest	N/A	N/A	S1-SCF-398	N/A	Replaced	No
½" Check Valve	Parker Hannifin	N/A	N/A	RSO 1864-90 Part# 8Z-C8L-1-SS	N/A	Replacement	No

7. Work Description:

The check valve was replaced per FCN S5175M. The replacement was verified to be in compliance with the original construction code as reconciled by SCE Code Reconciliation Report CR-90-001.
References: NCR 90050056, FCN S5175M, WR1-90-444

8. Tests Conducted: System Leakage [ ] System Functional [X] System Inservice [ ] Hydrostatic [ ] Pneumatic [ ] Other [ ]
Pressure: 915 psig Temp: N/A

FORM NIS-2 (back)

9. **Remarks:** None

(Applicable Manufacturer's Data Reports to be attached)

CERTIFICATE OF COMPLIANCE

We certify that the statements made in this report are correct and this replacement (repair or replacement) conforms to the rules of the ASME Code, Section XI.

Signed [signature] (Owner or Owner's Designee) Supvg. ASME Codes Engineer (Title) 4/2 (Date) 1991

CERTIFICATE OF INSPECTION

I, the undersigned holding a valid commission issued by the National Board of Boiler and Pressure Vessel Inspectors and the State or Province of California, employed by Arkwright Mutual Insurance Company (Factory Mutual System) of Norwood, Massachusetts have inspected the components described in this Owner's Report during the period from 7/18/90 to 4/2/91 and state that to the best of my knowledge and belief, this repair or replacement has been performed in accordance with Section XI of the ASME Code. By signing this certificate, neither the Inspector nor his employer makes any warranty, expressed or implied, concerning the repair or replacement in this Report. Furthermore, neither the Inspector nor his employer shall be liable in any manner for any personal injury or property damage or a loss of any kind arising from or connected with this inspection.

[signature] Commissions 1862 California
Inspector's Signature (State or Province, National Board)

Date April 2, 1991

Note: Supplemental sheets in the form of lists, sketches, or drawings may be used provided (1) size is 8-1/2 in. x 11 in., (2) information in Items 1 through 4 on this data report is included on each sheet, and (3) each sheet is numbered and the number of sheets is recorded at the top of this form.

NIS-2

OWNER'S REPORT OF REPAIR OR REPLACEMENT

As Required by the Provisions of ASME Code Section XI

1. Owner: Southern California Edison Company
2244 Walnut Grove Ave., Rosemead, CA 91770

ASME MO: 91030495

Unit: 1

2. Plant: San Onofre Nuclear Generating Station
P.O. Box 128, San Clemente, CA 92674-0128

RS: 066-91

3. Work Performed by: Southern California Edison

P&ID: 5178220 (B-11)

4. System Identification: Secondary Chemical Feed

5. (a) Applicable Construction Code: Required: ANSI B31.1; Actual: ASME Section III, Class 2, S'75 Edition, W'75 Addenda, Code Cases: None

(b) Applicable Edition of Section XI Utilized for Repairs or Replacements: 1977 Edition, S'78 Addenda, Code Cases: None

6. Identification of Components Repaired or Replaced:

Name of Component	Name of Manufacturer	Manufacturer Serial No.	National Board No.	Other Identification	Year Built	Repaired, Replaced, or Replacement	ASME Code Stamped Yes/No
¼" Tubing Valve	Imperial Eastman	N042905	N/A	S1-SCF-413	N/A	Replaced	No
¼" Tubing Valve	Imperial Clevite, Inc.	42893	N/A	RSO 2855-86	N/A	Replacement	NO

7. Work Description:

The existing valve was replaced due to a broken valve stem. A valve constructed to ASME III, Class 2, was used in lieu of one constructed to the original construction code (ANSI B31.1). The valve was installed using compression fitting.

8. Tests Conducted: System Leakage [ ] System Functional [X] System Inservice [ ] Hydrostatic [ ] Pneumatic [ ] Other [ ]
Pressure: 1280 psig Temp: N/A

FORM NIS-2 (back)

9. Remarks: None

(Applicable Manufacturer's Data Reports to be attached)

CERTIFICATE OF COMPLIANCE

We certify that the statements made in this report are correct and this replacement (repair or replacement) conforms to the rules of the ASME Code, Section XI.

Signed [signature] (Owner or Owner's Designee) Supvg. ASME Codes Engineer (Title) 4/3 (Date) 1991

CERTIFICATE OF INSPECTION

I, the undersigned holding a valid commission issued by the National Board of Boiler and Pressure Vessel Inspectors and the State or Province of California, employed by Arkwright Mutual Insurance Company (Factory Mutual System) of Norwood, Massachusetts have inspected the components described in this Owner's Report during the period from 3/6/91 to 3/21/91 and state that to the best of my knowledge and belief, this repair or replacement has been performed in accordance with Section XI of the ASME Code. By signing this certificate, neither the Inspector nor his employer makes any warranty, expressed or implied, concerning the repair or replacement in this Report. Furthermore, neither the Inspector nor his employer shall be liable in any manner for any personal injury or property damage or a loss of any kind arising from or connected with this inspection.

[signature] Commissions 1574 California
Inspector's Signature (State or Province, National Board)

Date April 4 1991

Note: Supplemental sheets in the form of lists, sketches, or drawings may be used provided (1) size is 8-1/2 in. x 11 in., (2) information in Items 1 through 4 on this data report is included on each sheet, and (3) each sheet is numbered and the number of sheets is recorded at the top of this form.

NIS-2
OWNER'S REPORT OF REPAIR OR REPLACEMENT

As Required by the Provisions of ASME Code Section XI

1. Owner: Southern California Edison Company
   2244 Walnut Grove Ave., Rosemead, CA 91770

   ASME MO: 90010416

   Unit: 1

2. Plant: San Onofre Nuclear Generating Station
   P.O. Box 128, San Clemente, CA 92674-0128

   RS: 292-90

3. Work Performed by: Southern California Edison

   P&ID: 5178125 (D-8)

4. System Identification: Containment Spray Hydrazine Addition

5. (a) **Applicable Construction Code:** ASME Section III, Class 2, 1977 Edition, No Addenda, Code Cases: None

   (b) **Applicable Edition of Section XI Utilized for Repairs or Replacements:** 1977 Edition, S'78 Addenda, Code Cases: None

6. **Identification of Components Repaired or Replaced:**

Name of Component	Name of Manufacturer	Manufacturer Serial No.	National Board No.	Other Identification	Year Built	Repaired, Replaced, or Replacement	ASME Code Stamped Yes/No
3/4" Relief Valve	Crosby Valve & Gage	N62554-00-0001	N/A	S1-SEA-RV-2003B	1979	Replaced	Yes
3/4" Relief Valve	Crosby Valve & Gage	N62554-00-0003	N/A	RSO 4110-85	1985	Replacement	Yes

7. **Work Description:**

   The relief valve failed the bench test. Upon disassembly the disc and seat were found scratched and the relief valve was replaced. The replacement relief valve was verified to be in compliance with the original construction code requirements. The replacement was tested and installed. A VT-2 examination was conducted during a system pressure test with no relevant indication noted.

   Reference: NCR 90070326

8. **Tests Conducted:** System Leakage [ ] System Functional [X] System Inservice [ ] Hydrostatic [ ] Pneumatic [ ] Other [ ]
   Pressure: 325 psig Temp: N/A

FORM NIS-2 (back)

9. **Remarks:** None

(Applicable Manufacturer's Data Reports to be attached)

CERTIFICATE OF COMPLIANCE

We certify that the statements made in this report are correct and this replacement (repair or replacement) conforms to the rules of the ASME Code, Section XI.

Signed [illegible] (Owner or Owner's Designee) Supvg. ASME Codes Engineer (Title) 6/11 (Date) 1991

CERTIFICATE OF INSPECTION

I, the undersigned holding a valid commission issued by the National Board of Boiler and Pressure Vessel Inspectors and the State or Province of California, employed by Arkwright Mutual Insurance Company (Factory Mutual System) of Norwood, Massachusetts have inspected the components described in this Owner's Report during the period from 1/31/90 to 6/12/91 and state that to the best of my knowledge and belief, this repair or replacement has been performed in accordance with Section XI of the ASME Code. By signing this certificate, neither the Inspector nor his employer makes any warranty, expressed or implied, concerning the repair or replacement in this Report. Furthermore, neither the Inspector nor his employer shall be liable in any manner for any personal injury or property damage or a loss of any kind arising from or connected with this inspection.

[illegible] Commissions 1862 California
Inspector's Signature (State or Province, National Board)

Date June 12, 1991

Note: Supplemental sheets in the form of lists, sketches, or drawings may be used provided (1) size is 8-1/2 in. x 11 in., (2) information in Items 1 through 4 on this data report is included on each sheet, and (3) each sheet is numbered and the number of sheets is recorded at the top of this form.

NIS-2
OWNER'S REPORT OF REPAIR OR REPLACEMENT

As Required by the Provisions of ASME Code Section XI

1. Owner: Southern California Edison Company
2244 Walnut Grove Ave., Rosemead, CA 91770

ASME MO: 89122214000
89122214001

Unit: 1

2. Plant: San Onofre Nuclear Generating Station
P.O. Box 128, San Clemente, CA 92674-0128

RS: 324-90

3. Work Performed by: Southern California Edison

P&ID: 5178115 (G-11)

4. System Identification: Safety Injection

5. (a) **Applicable Construction Code:** Westinghouse Equipment Specification 675268, Code Classified XI-2, Code Cases: None

(b) **Applicable Edition of Section XI Utilized for Repairs or Replacements:** 1977 Edition, S'78 Addenda, Code Cases: None

6. **Identification of Components Repaired or Replaced:**

Name of Component	Name of Manufacturer	Manufacturer Serial No.	National Board No.	Other Identification	Year Built	Repaired, Replaced, or Replacement	ASME Code Stamped Yes/No
6" Check Valve	Rockwell-Edwards	---	N/A	S1-SIS-003	---	Repaired	No

7. **Work Description:**

The valve was disassembled to permit hand stroking of the disc. During removal machining of the bonnet/body canopy seal, base material was inadvertently removed (NCR 90080223). Additionally, some dimensional discrepancies between the valve and the manufacturer's drawing were identified (NCR's 90100093 & 90100098). Weld build-up was performed on the damaged areas of the bonnet and body to restore the areas to the dimensional requirements of the manufacture's drawing. PT examinations were performed both before welding and again on the final machined surface of the repair areas. The repair welding is documented on WR1-90-679 & 680.

8. **Tests Conducted:** System Leakage [X] System Functional [ ] System Inservice [ ] Hydrostatic [ ] Pneumatic [ ] Other [X] VT-2 Examination
Pressure: 2080 psig Temp: 545 °F

FORM NIS-2 (back)

9. **Remarks:** None

(Applicable Manufacturer's Data Reports to be attached)

CERTIFICATE OF COMPLIANCE

We certify that the statements made in this report are correct and this repair (repair or replacement) conforms to the rules of the ASME Code, Section XI.

Signed [signature] (Owner or Owner's Designee) Supvg. ASME Codes Engineer (Title) 25 April 1991 (Date)

CERTIFICATE OF INSPECTION

I, the undersigned holding a valid commission issued by the National Board of Boiler and Pressure Vessel Inspectors and the State or Province of California, employed by Arkwright Mutual Insurance Company (Factory Mutual System) of Norwood, Massachusetts have inspected the components described in this Owner's Report during the period from 9/25/90 to 4/28/91 and state that to the best of my knowledge and belief, this repair or replacement has been performed in accordance with Section XI of the ASME Code. By signing this certificate, neither the Inspector nor his employer makes any warranty, expressed or implied, concerning the repair or replacement in this Report. Furthermore, neither the Inspector nor his employer shall be liable in any manner for any personal injury or property damage or a loss of any kind arising from or connected with this inspection.

[signature] Commissions 1862 California
Inspector's Signature (State or Province, National Board)

Date April 28, 1991

Note: Supplemental sheets in the form of lists, sketches, or drawings may be used provided (1) size is 8-1/2 in. x 11 in., (2) information in Items 1 through 4 on this data report is included on each sheet, and (3) each sheet is numbered and the number of sheets is recorded at the top of this form.

NIS-2
OWNER'S REPORT OF REPAIR OR REPLACEMENT
As Required by the Provisions of ASME Code Section XI

1. Owner: Southern California Edison Company
2244 Walnut Grove Ave., Rosemead, CA 91770
ASME MO: 89071268
Unit: 1

2. Plant: San Onofre Nuclear Generating Station
P.O. Box 128, San Clemente, CA 92672
RS: 087-90

3. Work Performed by: Southern California Edison
P&ID: 5178115

4. System Identification: SAFETY INJECTION

5. (a) Applicable Construction Code: ANSI B31.1-1955 (CODE CLASSIFIED XI-2)
Code Cases: None
(b) Applicable Edition of Section XI Utilized for Repairs or Replacements:
1977 Edition, S'78 Addenda, Code Cases: None

6. Identification of Components Repaired or Replaced:

Name of Component	Name of Manufacturer	Manufacturer Serial No.	National Board No.	Other Identification	Year Built	Repaired, Replaced, or Replacement	ASME Code Stamped Yes/No
16" GATE VALVE	CRANE	DWG. NO. C-58457-6	N/A	S1-SIS-302	N/A	----------	NO
1"x 5½" BOLTS (16)	ALLIED NUT & BOLT	TRACE: S1	N/A	RSO 2572-89	1989	REPLACEMENT	NO
1"-8 HEAVY HEX NUT	ALLIED NUT & BOLT	TRACE: V29	N/A	RSO 2572-89	1989	REPLACEMENT	NO

7. Work Description:
Bolting on valve S1-SIS-302 was replaced with bolting verified as meeting the original construction code (Ref. Material Evaluation ME-90-006). Prior to replacement a VT-1 examination was performed on the bolts and nuts. After replacement, a VT-2 examination was performed in conjunction with a system functional pressure test.

8. Tests Conducted: System Leakage [ ] System Functional [X] System Inservice [ ]
Hydrostatic [ ] Pneumatic [ ] Other [ ]
Pressure: 14 psig Temp: N/A °F

FORM NIS-2 (back)

9. Remarks: ASME III, CL.2, BOLTING USED IN LIEU OF ASTM (ANSI B31.1)

(Applicable Manufacturer's Data Reports to be attached)

CERTIFICATE OF COMPLIANCE

We certify that the statements made in this report are correct and this REPLACEMENT conforms to the rules of the ASME Code, Section XI.
(repair or replacement)

Signed _____ Supvg. ASME Codes Engineer 5/30 19 90
(Owner or Owner's Designee) Title (Date)

CERTIFICATE OF INSPECTION

I, the undersigned holding a valid commission issued by the National Board of Boiler and Pressure Vessel Inspectors and the State or Province of California, employed by Arkwright Mutual Insurance Company (Factory Mutual System) of Norwood, Massachusetts have inspected the components described in this Owner's Report during the period from 4/5/90 to 5/14/90 and state that to the best of my knowledge and belief, this repair or replacement has been performed in accordance with Section XI of the ASME Code. By signing this certificate, neither the Inspector nor his employer makes any warranty, expressed or implied, concerning the repair or replacement in this Report. Furthermore, neither the Inspector nor his employer shall be liable in any manner for any personal injury or property damage or a loss of any kind arising from or connected with this inspection.

Edward A. Shelton Commissions California 1574
Inspector's Signature (State or Province, National Board)

Date May 30 19 90

Note: Supplemental sheets in the form of lists, sketches, or drawings may be used provided (1) size is 8-1/2 in. x 11 in., (2) information in Items 1 through 4 on this data report is included on each sheet, and (3) each sheet is numbered and the number of sheets is recorded at the top of this form.

NIS-2

OWNER'S REPORT OF REPAIR OR REPLACEMENT

As Required by the Provisions of ASME Code Section XI

1. Owner: Southern California Edison Company
2244 Walnut Grove Ave., Rosemead, CA 91770

Traveler: ASME MO

Unit: 1

2. Plant: San Onofre Nuclear Generating Station
P.O. Box 128, San Clemente, CA 92672

MERS: 374-89

3. Work Performed by: Southern California Edison

M.O.: 89070594

4. System Identification: Safety Injection System (SIS)

P&ID: 5178115 (G-5)

5. (a) Applicable Construction Code: ASA B31.1, 1955 Edition
Code Cases: N/A Code Classified: ASME XI-2
(b) Applicable Edition of Section XI Utilized for Repairs or Replacements:
1977 Edition, S'78 Addenda, Code Cases: N/A

6. Identification of Components Repaired or Replaced:

Name of Component	Name of Manufacturer	Manufacturer Serial No.	National Board No.	Other Identification	Year Built	Repaired, Replaced, or Replacement	ASME Code Stamped Yes/No
Isolation Valve	Crane	N/A	N/A	S1-SIS-312 (1/2")	N/A	----------	No
1/2" Pipe, 3" Lg. Sch. 40 A-312 to 304	----------	N/A	N/A	Upstream of Valve	N/A	Replaced	No
1/2" Pipe, 3" Lg. Sch. 40 A-312 to 304	Sandvik Steel Company	N/A	N/A	RSO-1251-87 Ht. No. 453483 Ht. Code - FBS	N/A	Replacement	No

7. Work Description:
1/2" pipe section upstream of valve SIS-312 has numerous NDE-Pt indications. Replace pipe section with in-kind pipe: 1/2", Schedule 40, ASTM A-312 type 304 pipe.

REFERENCE: NCR S01-P-7304, WR1-89-502, ME-89-038

8. Tests Conducted: System Leakage [ ] System Functional [x] System Inservice [
Hydrostatic [ ] Pneumatic [ ] Other [ ]
Pressure: 160 psig Temp: Amb °F

FORM NIS-2 (back)

9. Remarks: Documentation for the replacement item is available on site.

(Applicable Manufacturer's Data Reports to be attached)

CERTIFICATE OF COMPLIANCE

We certify that the statements made in this report are correct and this Replacement conforms to the rules of the ASME Code, Section XI.
(repair or replacement)

Signed [illegible] (Supvg. ASME Codes Engineer) 8/8 1989
(Owner or Owner's Designee) Title (Date)

CERTIFICATE OF INSPECTION

I, the undersigned holding a valid commission issued by the National Board of Boiler and Pressure Vessel Inspectors and the State or Province of California, employed by Arkwright Mutual Insurance Company (Factory Mutual System) of Norwood, Massachusetts have inspected the components described in this Owner's Report during the period from 2/7/89 to 8/8/89 and state that to the best of my knowledge and belief, this repair or replacement has been performed in accordance with Section XI of the ASME Code. By signing this certificate, neither the Inspector nor his employer makes any warranty, expressed or implied, concerning the repair or replacement in this Report. Furthermore, neither the Inspector nor his employer shall be liable in any manner for any personal injury or property damage or a loss of any kind arising from or connected with this inspection.

[illegible] Commissions 1272 California
Inspector's Signature (State or Province, National Board)

Date 8/9 1989

Note: Supplemental sheets in the form of lists, sketches, or drawings may be used provided (1) size is 8-1/2 in. x 11 in., (2) information in Items 1 through 4 on this data report is included on each sheet, and (3) each sheet is numbered and the number of sheets is recorded at the top of this form.

NIS-2

OWNER'S REPORT OF REPAIR OR REPLACEMENT

As Required by the Provisions of ASME Code Section XI

1. Owner: Southern California Edison Company
2244 Walnut Grove Ave., Rosemead, CA 91770

Traveler: ASME MO

Unit: 1

2. Plant: San Onofre Nuclear Generating Station
P.O. Box 128, San Clemente, CA 92672

MERS: 361-89

3. Work Performed by: Southern California Edison

M.O.: 89062907

4. System Identification: Safety Injection System (SIS)

P&ID: 5178115-10 (G-4)

5. (a) Applicable Construction Code: ASA B31.1, 1955 Edition
Code Cases: N/A Code Classified: ASME XI-2
(b) Applicable Edition of Section XI Utilized for Repairs or Replacements:
1977 Edition, S'78 Addenda, Code Cases: N/A

6. Identification of Components Repaired or Replaced:

Name of Component	Name of Manufacturer	Manufacturer Serial No.	National Board No.	Other Identification	Year Built	Repaired, Replaced, or Replacement	ASME Code Stamped Yes/No
Test Connector Valve	Crane	N/A	N/A	S1-SIS-313 (1/2")	N/A	----------	No
1/2" pipe, 3" Lg. Sch. 10 A-312 tp 304	----------	N/A	N/A	Upstream of Vlv	N/A	Replaced	No
1/2" pipe, 3" Lg. Sch. 40 A-312 tp 304	Sandvik Inc.	N/A	N/A	RSO-1251-87 Ht. No. 463488 Ht. Code FBS	N/A	Replacement	No

7. Work Description:
1/2" pipe section upstream of valve SIS-313 is leaking. Replace this 3" (approximately) long section with Schedule 40 pipe (ASTM A-312 type 304).

REFERENCE: NCR SO1-P-7297, ME-89-038

8. Tests Conducted: System Leakage [ ] System Functional [x] System Inservice [ ]
Hydrostatic [ ] Pneumatic [ ] Other [ ]
Pressure: 160 psig Temp: Amb °F

FORM NIS-2 (back)

9. Remarks: Documentation for the replacement item is available on site.

(Applicable Manufacturer's Data Reports to be attached)

CERTIFICATE OF COMPLIANCE

We certify that the statements made in this report are correct and this Replacement (repair or replacement) conforms to the rules of the ASME Code, Section XI.

Signed [illegible] (Supvg. ASME Codes Engineer) 8/16 1989
(Owner or Owner's Designee) Title (Date)

CERTIFICATE OF INSPECTION

I, the undersigned holding a valid commission issued by the National Board of Boiler and Pressure Vessel Inspectors and the State or Province of California, employed by Arkwright Mutual Insurance Company (Factory Mutual System) of Norwood, Massachusetts have inspected the components described in this Owner's Report during the period from 7/8/89 to 8/11/89 and state that to the best of my knowledge and belief, this repair or replacement has been performed in accordance with Section XI of the ASME Code. By signing this certificate, neither the Inspector nor his employer makes any warranty, expressed or implied, concerning the repair or replacement in this Report. Furthermore, neither the Inspector nor his employer shall be liable in any manner for any personal injury or property damage or a loss of any kind arising from or connected with this inspection.

[illegible] Commissions 1272 California
Inspector's Signature (State or Province, National Board)

Date 8/14 1989

Note: Supplemental sheets in the form of lists, sketches, or drawings may be used provided (1) size is 8-1/2 in. x 11 in., (2) information in Items 1 through 4 on this data report is included on each sheet, and (3) each sheet is numbered and the number of sheets is recorded at the top of this form.

NIS-2

OWNER'S REPORT OF REPAIR OR REPLACEMENT

As Required by the Provisions of ASME Code Section XI

1. Owner: Southern California Edison Company
2244 Walnut Grove Ave., Rosemead, CA 91770
Traveler: ASME MO
Unit: 1

2. Plant: San Onofre Nuclear Generating Station
P.O. Box 128, San Clemente, CA 92672
MERS: 300-89

3. Work Performed by: Southern California Edison
M.O.: 89060285

4. System Identification: Safety Injection
P&ID: 5178115

5. (a) Applicable Construction Code: ASA B31.1 - 1955 (XI-2)
Code Cases: N/A
(b) Applicable Edition of Section XI Utilized for Repairs or Replacements:
1977 Edition, S'78 Addenda, Code Cases: N/A

6. Identification of Components Repaired or Replaced:

Name of Component	Name of Manufacturer	Manufacturer Serial No.	National Board No.	Other Identification	Year Built	Repaired, Replaced, or Replacement	ASME Code Stamped Yes/No
3/4" Y-Type Globe Valve	Rockwell	N/A	N/A	S1-SIS-366	-----	Repaired	No

7. Work Description:
Ground out the existing weld per the instruction contained in WR1-89-392. Performed pre-reweld NDE (PT). Performed reweld of upstream weld at S1-SIS-366 per WR1-89-392. Performed post-reweld NDE (PT). Note: 1. Hydrostatic test not required per IWA-4400 (b)(3). 2. Exception taken to performance of system functional test as it would require a special test with an abnormal lineup

8. Tests Conducted: System Leakage [ ] System Functional [ ] System Inservice [ ] Hydrostatic [ ] Pneumatic [ ] Other [x] None; Hydrostatic test not required per IWA-4400 (b)(3); Exception taken to performance of system functional test as it would require a special test with an abnormal lineup.
Pressure: psig Temp: °F

FORM NIS-2 (back)

9. Remarks: none

(Applicable Manufacturer's Data Reports to be attached)

CERTIFICATE OF COMPLIANCE

We certify that the statements made in this report are correct and this Repair conforms to the rules of the ASME Code, Section XI.
(repair or replacement)

Signed [signature] (Supvg. ASME Codes Engineer) 6/23 1989
(Owner or Owner's Designee) Title (Date)

CERTIFICATE OF INSPECTION

I, the undersigned holding a valid commission issued by the National Board of Boiler and Pressure Vessel Inspectors and the State or Province of California, employed by Arkwright Mutual Insurance Company (Factory Mutual System) of Norwood, Massachusetts have inspected the components described in this Owner's Report during the period from 6-1-89 to 6-23-89 and state that to the best of my knowledge and belief, this repair or replacement has been performed in accordance with Section XI of the ASME Code. By signing this certificate, neither the Inspector nor his employer makes any warranty, expressed or implied, concerning the repair or replacement in this Report. Furthermore, neither the Inspector nor his employer shall be liable in any manner for any personal injury or property damage or a loss of any kind arising from or connected with this inspection.

[signature] Commissions California 1574
Inspector's Signature (State or Province, National Board)

Date June 23 1989

Note: Supplemental sheets in the form of lists, sketches, or drawings may be used provided (1) size is 8-1/2 in. x 11 in., (2) information in Items 1 through 4 on this data report is included on each sheet, and (3) each sheet is numbered and the number of sheets is recorded at the top of this form.

ASME Section XI Abstract
Owner's Summary of Repair or Replacement

1. Owner: Southern California Edison Company
2244 Walnut Grove Ave.
Rosemead, CA 91770

Traveler: S01-90-008

Unit: 1

2. Plant: San Onofre Nuclear Generating Station
P. O. Box 128, San Clemente, CA 92672

DCP: 1-3526.00SN

3. Work Performed by: Bechtel Construction Co.
P. O. Box 450
San Clemente, CA 92672

CWO: 90030632000
90030640000
90061772000

4. System Identification: Safety Injection System (SIS)

P&ID: 5170826

5. Plant Tag No.: N/A

Serial No.: N/A

6. Component: See NIS-2

Name: See Nis-2

Size: See NIS-2

7. Code: ASA B16.5, 1957 Ed.

Class: XI-2

8. Purpose (Statement of Problem):

DCP 1-3526.00SN modifies line #S1-SIS-6004-1"-CL. Adds Y-strainer S1-SIS-YS-981 & valve S1-SIS-411.

Associated DWG's: 452674
FIDCN's M-7436, M-7444, M-7447.

9. Narrative Summary (Brief Description of Work Performed):

1. The appropriate documents for the new item were reviewed to verify compliance with the applicable Construction code.
2. Valves, piping & Associated hardware were installed IAW per DCP 1-3526 & IAW WR5/5A weld records for welds C, D, ST, SU, SV, SW, SX, SY, SZ, SMA, SMB, SMC, SMD, SME(C-1), SMF, SMG,SMH, SMJ, SMK.
3. Initial System Functional test with VT-2 was performed.

10. Material Used:

See NIS-2

Prepared by: Les Taylor Date 03/06/91

NIS-2
OWNER'S REPORT OF REPAIR OR REPLACEMENT
As Required by the Provisions of ASME Code Section XI

1. Owner: Southern California Edison Company
2244 Walnut Grove Ave.
Rosemead, CA 91770

Traveler: S01-90-008

Unit: 1

2. Plant: San Onofre Nuclear Generating Station
P. O. Box 128, San Clemente, CA 92672

DCP: 1-3526.00SN

3. Work Performed by: Bechtel Construction Co.
P. O. Box 450
San Clemente, CA 92672

CWO: 90030632000
90030640000
90061772000

4. System Identification: Safety Injection System (SIS)

P&ID: 5170826

5. (a) Applicable Construction Code: ASA B16.5, 1957 Ed. for valves Code Class: XI-2
ASA B31.1, 1955 Ed. for piping Code Class: XI-2

(b) Applicable Edition of Section XI Utilized for Repairs or Replacements:
1977 Edition thru S'78 Addenda, Code Cases: N/A

6. Identification of Components Repaired or Replaced:

Name Component	Name of Manufacturer	Manufacturer Serial No.	National Board No.	Other Identification	Year Built	Repaired Replaced, or Replacement	ASME Code Stamped Yes/No
1" 90° elbow	Camco Fittings Co.	Ht #34	N/A	Item 10 RSO #0951-90	N/A	Replacement	NO
1" 45° elbow	Camco Fittings Co.	HT #91	N/A	Item 11 RSO #0951-90	N/A	Replacement	NO
1" Y-strainer	Penncast Corp.	HT #28548	N/A	Item 12 SIS-YS-981 RSO #1156-90	1990	Replacement	NO
1" tee SW	Camco Fittings Co.	HT #93	N/A	Item 14 RSO #0951-90	N/A	Replacement	NO
1" coupling SW	Camco Fittings Co.	HT #EBH	N/A	Item 15 RSO #0951-90	N/A	Replacement	NO
1" pipe Sch. 160	Combustion Engineering	HT #K31592	N/A	Item 8 RSO #0951-90	N/A	Replacement	NO

7. Work Description:

DCP 1-3526.00SN Modifies line S1-SIS-YS-6004-1"-CL. Adds Y-strainer S1-SIS-YS-981 & valve S1-SIS-411. Fabricates welds C, D, ST, SU, SV, SW, SX, SY, SZ, SMA, SMB, SMC, SMD, SME(C-1), SMF, SMG, SMH, SMJ & SMK. Perform system functional test.

8. Tests Conducted: System Leakage [ ] System Functional [✓]
System Inservice [ ] Hydrostatic [ ] Pneumatic [ ] Other [ ]
Pressure: 1330 psig Temp: 73.4°F (Weld "ST")
Pressure: 1220 psig Temp: 73.1°F (Remaining Welds)

FORM NIS-2 (back)

9. Remarks:

Documentation for items listed in Block 6 are available onsite.
(Applicable Manufacturer's Data Reports to be attached)

CERTIFICATE OF COMPLIANCE

We certify that the statements made in this report are correct and this replacement conforms to the rules of the ASME Code, Section XI
(Repair or Replacement)

Signed [illegible] Bel Codes Eng 3.7, 1991
(Owner or Owner's Designee) Title (Date)

CERTIFICATE OF INSPECTION

I, the undersigned holding a valid commission issued by the National Board of Boiler and Pressure Vessel Inspectors and the State or Province of California employed by *Arkwright Mutual Insurance Company of Norwood, Massachusetts have inspected the components described in this Owner's Report during the period from 6/8/90 to 3/7/91 and state that to the best of my knowledge and belief, this repair or replacement has been performed in accordance with Section XI of the ASME Code. By signing this certificate, neither the Inspector nor his employer makes any warranty, expressed or implied, concerning the repair or replacement in this Report. Furthermore, neither the Inspector nor his employer shall be liable in any manner for any personal injury or property damage or a loss of any kind arising from or connected with this inspection. *Factory Mutual System

[illegible] Commissions 1862 CA
Inspector's Signature (State or Province, National Board

Date March 7, 1991

Note: Supplemental sheets in form of lists, sketches, or drawings may be used provided (1) size is 8-1/2 in. x 11 in., (2) information in Items 1 through 4 on this data report is included on each sheet is recorded at the top of this form.

1. Owner: Southern California Edison Company
2244 Walnut Grove Ave.
Rosemead, CA 91770

Traveler: S01-90-008

Unit: 1

2. Plant: San Onofre Nuclear Generating Station
P. O. Box 128, San Clemente, CA 92672

DCP: 1-3526.00SN

3. Work Performed by: Bechtel Construction Co.
P. O. Box 450
San Clemente, CA 92672

CWO: 90030632000
90030640000
90061772000

4. System Identification: Safety Injection System (SIS)

P&ID: 5170826

Name Component	Name of Manufacturer	Manufacturer Serial No.	National Board No.	Other Identification	Year Built	Repaired Replaced, or Replacement	ASME Code Stamped Yes/No
1" gate valve	Anchor Darling	SN #E3265-18-3	N/A	Item 15 SIS-411 RSO #0543-90	1990	Replacement	YES

ASME Section XI Abstract
Owner's Summary of Repair or Replacement

1. Owner: Southern California Edison Company
2244 Walnut Grove Ave.
Rosemead, CA 91770

Traveler: S01-90-009

Unit: 1

2. Plant: San Onofre Nuclear Generating Station
P. O. Box 128, San Clemente, CA 92672

DCP: 1-3526.00SN

3. Work Performed by: Bechtel Construction Co.
P. O. Box 450
San Clemente, CA 92672

CWO: 90030634000
90030640000
90060815000

4. System Identification: Safety Injection System (SIS)

P&ID: 5170826

5. Plant Tag No.: N/A

Serial No.: N/A

6. Component: See NIS-2

Name: See NIS-2 Size: See NIS-2

7. Code: ASA B16.5, 1957 Ed. for valves Class: XI-3

8. Purpose (Statement of Problem):

DCP 1-3526.00SN modifies line #S1-SIS-6005-1"-CL, adds Y-strainer S1-SIS-YS-982 & valve S1-SIS-412.

Associated DWG's: 452674
FIDCN's M-7436,M-7444,M-7447.

9. Narrative Summary (Brief Description of Work Performed):

1. The appropriate documents were reviewed to verify compliance with the applicable construction code.
2. Valves, piping & associated hardware were installed IAW DCP1-3526.00SN & IAW WR5/5a weld records for welds A, B, SA, SB, SC, SD, SE, SF, SG, SH, SJ, SK, SL, SM, SN, SP, SQ, SR, SS.
3. An Initial System Functional Test with VT-2 was performed.

10. Material Used:

See NIS-2 for Matl used

Prepared by: Les Taylor Date 03/06/91

RJB 3/12/91

NIS-2
OWNER'S REPORT OF REPAIR OR REPLACEMENT
As Required by the Provisions of ASME Code Section XI

1. Owner: Southern California Edison Company
2244 Walnut Grove Ave.
Rosemead, CA 91770

Traveler: S01-90-009

Unit: 1

2. Plant: San Onofre Nuclear Generating Station
P. O. Box 128, San Clemente, CA 92672

DCP: 1-3526.00SN

3. Work Performed by: Bechtel Construction Co.
P. O. Box 450
San Clemente, CA 92672

CWO: 90030634000
90030640000
90060815000

4. System Identification: Safety Injection System (SIS)

P&ID: 5170826

5. (a) Applicable Construction Code: ASA B16.5, 1957 Ed. for valves Code Class:XI-2
ASA B31.1, 1955 Ed. for piping & fittings Code Class: XI-2
(b) Applicable Edition of Section XI Utilized for Repairs or Replacements:
1977 Edition thru S'78 Addenda, Code Cases:N/A

6. Identification of Components Repaired or Replaced:

Name Component	Name of Manufacturer	Manufacturer Serial No.	National Board No.	Other Identification	Year Built	Repaired Replaced, or Replacement	ASME Code Stamped Yes/No
1" pipe sch.160	Combustion Engineering	Ht. #K31592	N/A	Item 8 RSO #0951-90	N/A	Replacement	NO
1" 90° Ell	Camco Fittings Co.	Ht. #34	N/A	Item 10 RSO #0951-90	N/A	Replacement	NO
1" 45° Ell	Camco Fittings Co.	Ht. #91	N/A	Item 11 RSO #0951-90	N/A	Replacement	NO
1" Y Strainer	Penncast Co.	Ht. #30259	N/A	Item 12 SIS-YS-982 RSO #1156-90	1990	Replacement	NO
1" gate valve	Anchor Darling	S/N E3265-18-4	N/A	Item 13 SIS-412 RSO #0543-90	1990	Replacement	YES
1" tee SW	Camco Fittings Co.	Ht. #93	N/A	Item 14 RSO #0951-90	N/A	Replacement	NO

7. Work Description:

DCP 1-3526.00SN Modifies line S1-SIS-6005-1"-CL. Adds Y-strainer S1-SIS-YS-982 & valve S1-SIS-412. Fabricate welds A, B, SA, SB, SC, SD, SE, SF, SG, SH, SJ, SK, SL, SM, SN, SP, SQ, SR & SS. Perform system functional test.

8. Tests Conducted: System Leakage [ ] System Functional [✓]
System Inservice [ ] Hydrostatic [ ] Pneumatic [ ] Other [ ]
Pressure: 1365 psig Temp: 73.2° (Weld "SA" only)
Pressure: 1220 psig Temp: 73.1° (Remaining Welds)

1. **Owner:** Southern California Edison Company
2244 Walnut Grove Ave.
Rosemead, CA 91770

Traveler: S01-90-009

Unit: 1

2. **Plant:** San Onofre Nuclear Generating Station
P. O. Box 128, San Clemente, CA 92672

DCP: 1-3526.00SN

3. **Work Performed by:** Bechtel Construction Co.
P. O. Box 450
San Clemente, CA 92672

CWO: 90030634000
90030640000
90060815000

4. **System Identification:** Safety Injection System (SIS)

P&ID: 5170826

Name Component	Name of Manufacturer	Manufacturer Serial No.	National Board No.	Other Identification	Year Built	Repaired Replaced, or Replacement	ASME Code Stamped Yes/No
1" coupling	Camco Fittings Co.	Ht. #EBH	N/A	Item 15 RSO #0951-90	N/A	Replacement	NO

ASME Section XI Abstract
Owner's Summary of Repair or Replacement

1. **Owner:** Southern California Edison Company
2244 Walnut Grove Ave.
Rosemead, CA 91770

Traveler: SO1-90-015

Unit: 1

2. **Plant:** San Onofre Nuclear Generating Station
P. O. Box 128, San Clemente, CA 92672

MMP: 1-3526.00SN

3. **Work Performed by:** Bechtel Construction Co.
P. O. Box 450
San Clemente, CA 92672

CWO: 90061739000
90061772000

4. **System Identification:** Safety Injection System (SIS)

P&ID: 5170826

5. **Plant Tag No.:** S1-SIS-SV-2900

Serial No.: 6

6. **Component:** Solenoid valve

Name: Target Rock **Size:** 3/4"ϕ

7. **Code:** ASA B16.5, 1957 Ed.

Class: XI-2

8. **Purpose (Statement of Problem):**

MMP 1-3526.00SN Removes bonnet seal weld & installs an O-ring in its place and fabricates seal weld 'A' in accordance with MMP 1-3526.00SN & WR-5A

Associted DWG's: 452674
FIDCN M-7499

9. **Narrative Summary (Brief Description of Work Performed):**

1. Valve bonnet seal weld was removed, O-ring installed & valve bonnet tack weld 'A' was performed

2. Initial system functional test with VT-2 was performed.

10. **Material Used:**

See NIS-2

Prepared by: Les Taylor **Date** 03/06/91

RBB 3-11-9

NIS-2
OWNER'S REPORT OF REPAIR OR REPLACEMENT
As Required by the Provisions of ASME Code Section XI

1. Owner: Southern California Edison Company
2244 Walnut Grove Ave.
Rosemead, CA 91770

Traveler: S01-90-015

Unit: 1

2. Plant: San Onofre Nuclear Generating Station
P. O. Box 128, San Clemente, CA 92672

MMP: 1-3526.00SN

3. Work Performed by: Bechtel Construction Co.
P. O. Box 450
San Clemente, CA 92672

CWO: 90061739000
90061772000

4. System Identification: Safety Injection System (SIS)

P&ID: 5170826

5. (a) Applicable Construction Code: ASA B16.5, 1957 Ed. Code Classified XI-2

(b) Applicable Edition of Section XI Utilized for Repairs or Replacements:
1977 Edition thru S'78 Addenda, Code Cases: N/A

6. Identification of Components Repaired or Replaced:

Name Component	Name of Manufacturer	Manufacturer Serial No.	National Board No.	Other Identification	Year Built	Repaired Replaced, or Replacement	ASME Code Stamped Yes/No
Solenoid Valve	Target Rock	6	N/A	S1-SIS-SV-2900	1988	Repaired	YES

7. Work Description:

MMP 1-3526.00SN Remove bonnet seal weld & install O-ring with tack weld 'A'.

8. Tests Conducted: System Leakage [ ] System Functional [✓]
System Inservice [ ] Hydrostatic [ ] Pneumatic [ ] Other [ ]
Pressure: >1220 psig Temp: 73.1°F

FORM NIS-2 (back)

9. **Remarks:**

Documentation for items listed in Block 6 are available onsite.
(Applicable Manufacturer's Data Reports to be attached)

CERTIFICATE OF COMPLIANCE

We certify that the statements made in this report are correct and this repair conforms to the rules of the ASME Code, Section XI
(Repair or Replacement)

Signed [illegible] Bell Corps Eng. 3-8, 1991
(Owner or Owner's Designee) Title (Date)

CERTIFICATE OF INSPECTION

I, the undersigned holding a valid commission issued by the National Board of Boiler and Pressure Vessel Inspectors and the State or Province of California employed by *Arkwright Mutual Insurance Company of Norwood, Massachusetts have inspected the components described in this Owner's Report during the period from 6/27/90 to 3/8/91 and state that to the best of my knowledge and belief, this repair or replacement has been performed in accordance with Section XI of the ASME Code. By signing this certificate, neither the Inspector nor his employer makes any warranty, expressed or implied, concerning the repair or replacement in this Report. Furthermore, neither the Inspector nor his employer shall be liable in any manner for any personal injury or property damage or a loss of any kind arising from or connected with this inspection. *Factory Mutual System

[illegible] Commissions 1862 CA
Inspector's Signature (State or Province, National Board

Date March 8, 1991

Note: Supplemental sheets in form of lists, sketches, or drawings may be used provided (1) size is 8-1/2 in. x 11 in., (2) information in Items 1 through 4 on this data report is included on each sheet is recorded at the top of this form.

RBS 3-11-

ASME Section XI Abstract
Owner's Summary of Repair or Replacement

1. Owner: Southern California Edison Company
2244 Walnut Grove Ave.
Rosemead, CA 91770

Traveler: S01-90-016

Unit: 1

2. Plant: San Onofre Nuclear Generating Station
P. O. Box 128, San Clemente, CA 92672

MMP: 1-3526.00SN

3. Work Performed by: Bechtel Construction Co.
P. O. Box 450
San Clemente, CA 92672

CWO: 90061768000
90060815000

4. System Identification: Safety Injection System (SIS)

P&ID: 5170826

5. Plant Tag No.: S1-SIS-SV-3900

Serial No.: 5

6. Component: Solenoid valve

Name: Target Rock Size: 3/4"ϕ

7. Code: ASA B16.5, 1957 Ed.

Class: XI-2

8. Purpose (Statement of Problem):

MMP 1-3526.00SN Removes bonnet seal weld & installs an O-ring in its place and fabricates seal weld 'B' IAW MMP 1-3526.00SN & WR-5A

Associted DWG's: 452674
FIDCN M-7499

9. Narrative Summary (Brief Description of Work Performed):

1. Valve bonnet seal weld was removed, O-ring installed & valve bonnet tack weld 'B' was performed

2. Initial system functional test with VT-2 was performed.

10. Material Used:

See NIS-2

Prepared by: Les Taylor Date 03/06/91

NIS-2
OWNER'S REPORT OF REPAIR OR REPLACEMENT
As Required by the Provisions of ASME Code Section XI

1. Owner: Southern California Edison Company
2244 Walnut Grove Ave.
Rosemead, CA 91770

Traveler: S01-90-016

Unit: 1

2. Plant: San Onofre Nuclear Generating Station
P. O. Box 128, San Clemente, CA 92672

MMP: 1-3526.00SN

3. Work Performed by: Bechtel Construction Co.
P. O. Box 450
San Clemente, CA 92672

CWO: 90061768000
90060815000

4. System Identification: Safety Injection System (SIS)

P&ID: 5170826

5. (a) Applicable Construction Code: ASA B16.5, 1957 Ed. Code Classified XI-2

(b) Applicable Edition of Section XI Utilized for Repairs or Replacements:
1977 Edition thru S'78 Addenda, Code Cases: N/A

6. Identification of Components Repaired or Replaced:

Name Component	Name of Manufacturer	Manufacturer Serial No.	National Board No.	Other Identification	Year Built	Repaired Replaced, or Replacement	ASME Code Stamped Yes/No
Solenoid Valve	Target Rock	5	N/A	S1-SIS-SV-3900	1988	Repaired	YES

7. Work Description:

MMP 1-3526.00SN Remove bonnet seal weld & install O-ring with tack weld 'B'.

8. Tests Conducted: System Leakage [ ] System Functional [✓]
System Inservice [ ] Hydrostatic [ ] Pneumatic [ ] Other [ ]
Pressure: >1220 psig Temp: 73.1°F

FORM NIS-2 (back)

9. Remarks:

Documentation for items listed in Block 6 are available onsite.
(Applicable Manufacturer's Data Reports to be attached)

CERTIFICATE OF COMPLIANCE

We certify that the statements made in this report are correct and this repair conforms to the rules of the ASME Code, Section XI
(Repair or Replacement)

Signed T E Dunlap Bec CODES ENG. 3-7, 1991
(Owner or Owner's Designee) Title (Date)

CERTIFICATE OF INSPECTION

I, the undersigned holding a valid commission issued by the National Board of Boiler and Pressure Vessel Inspectors and the State or Province of California employed by *Arkwright Mutual Insurance Company of Norwood, Massachusetts have inspected the components described in this Owner's Report during the period from 6/27/90 to 3/7/91 and state that to the best of my knowledge and belief, this repair or replacement has been performed in accordance with Section XI of the ASME Code. By signing this certificate, neither the Inspector nor his employer makes any warranty, expressed or implied, concerning the repair or replacement in this Report. Furthermore, neither the Inspector nor his employer shall be liable in any manner for any personal injury or property damage or a loss of any kind arising from or connected with this inspection. *Factory Mutual System

C Thompson Commissions 1862 CA
Inspector's Signature (State or Province, National Board

Date March 7, 1991

Note: Supplemental sheets in form of lists, sketches, or drawings may be used provided (1) size is 8-1/2 in. x 11 in., (2) information in Items 1 through 4 on this data report is included on each sheet is recorded at the top of this form.

ASME Section XI Abstract
Owner's Summary of Repair or Replacement

1. Owner: Southern California Edison Company
2244 Walnut Grove Ave.
Rosemead, CA 91770

Traveler: S01-90-024

Unit: 1

2. Plant: San Onofre Nuclear Generating Station
P. O. Box 128, San Clemente, CA 92672

MMP: 1-3601.00SM

3. Work Performed by: Bechtel Construction Co.
P. O. Box 450
San Clemente, CA 92672

CWO: 90080635000
90080845000

4. System Identification: Turbine Plant Cooling Water (TCW) P&ID: 5178320

5. Plant Tag No.: See NIS-2 Serial No.: See NIS-2

6. Component: See NIS-2 Name: See NIS-2 Size: See NIS-2

7. Code: ASA B16.5, 1957 Ed. for valves ANSI B31.1, 1980 Ed. for piping. Class: XI-2

8. Purpose (Statement of Problem):

MMP 1-3601.00SM reroutes portion of line S1-TCW-892-4"-HM

Associated DWG's 714492, 5178320
FIDCN M7505, M7548, M7566

9. Narrative Summary (Brief Description of Work Performed):

1. The appropriate documents were reviewed to verify compliance with the applicable construction code.
2. Valves, piping & associated hardware were installed in accordance with MMP 1-3601.00SM and in accordance with the WR5/5A weld records SA, SB, SC, SD, SE, A, B, C, D, E, F(C-1), and G.
3. A system hydrostatic test with VT-2 was performed.

10. Material Used:

See NIS-2

Prepared by: Les Taylor Date 12/26/90

NIS-2

OWNER'S REPORT OF REPAIR OR REPLACEMENT

As Required by the Provisions of ASME Code Section XI

==========

1. Owner: Southern California Edison Company
2244 Walnut Grove Ave.
Rosemead, CA 91770

Traveler: S01-90-024

Unit: 1

2. Plant: San Onofre Nuclear Generating Station
P. O. Box 128, San Clemente, CA 92672

MMP: 1-3601.00SM

3. Work Performed by: Bechtel Construction Co.
P. O. Box 450
San Clemente, CA 92672

CWO: 90080635000
90080845000

4. System Identification: Turbine Plant Cooling Water (TCW) P&ID: 5178320

5. (a) Applicable Construction Code: ASA B16.5, 1957 Ed. for valves Code Class: XI-2
ANSI B31.1, 1980 Ed. for piping Code Class: XI-2

(b) Applicable Edition of Section XI Utilized for Repairs or Replacements:
1977 Edition, thru S'78 Addenda, Code Cases: N/A

6. Identification of Components Repaired or Replaced:

Name Component	Name of Manufacturer	Manufacturer Serial No.	National Board No.	Other Identification	Year Built	Repaired Replaced, or Replacement	ASME Code Stamped Yes/No
3/4" Dia. Studs	Copperweld Steel Co.	HT # 94434	N/A	Item 442 RSO # 2835-89	N/A	Replacement	No
3/4" Dia. Nuts	Texas Bolt Co.	HT # 36654	N/A	Item #442 RSO #2835-89	N/A	Replacement	No
4" X 1" Threadolet	WFI Nuclear Products, Inc.	HT # 271SNR	N/A	Item #911 RSO #2894-90	N/A	Replacement	No
4" Flange	Ladish Co.	HT # ND2K	N/A	Item 221 RSO #2586-90	N/A	Replacement	No
4" Elbow 90 °	Ladish Co.	HT # FH6X	N/A	Item 224 RSO #2586-90	N/A	Replacement	No
4" Pipe Sch STd/40	USS Tubular Prod.	HT # L01977	N/A	Item 14 RSO # 2586-90	N/A	Replacment	No

7. Work Description:

MMP 1-3601.00SM, Reroute line S1-TCW-892-4"-HM
Fabricate welds SA, SB, SC, SD, SE, A, B, C, D, E, F(C-1), and G. Perform system hydrostatic test.

8. Tests Conducted: System Leakage [ ] System Functional [ ]
System Inservice [ ] Hydrostatic [X] Pneumatic [ ] Other [ ]
Pressure: 140 psig Temp: AMB

FORM NIS-2 (back)

1/7/91

9. Remarks:

Documentation for items listed in Block 6 are available onsite.
(Applicable Manufacturer's Data Reports to be attached)

CERTIFICATE OF COMPLIANCE

We certify that the statements made in this report are correct and this replacement conforms to the rules of the ASME Code, Section XI
(Repair or Replacement)

Signed Gary L. Allen RD. CONST. MGR. Dec. 27, 1990
(Owner or Owner's Designee) Title (Date)

CERTIFICATE OF INSPECTION

I, the undersigned holding a valid commission issued by the National Board of Boiler and Pressure Vessel Inspectors and the State or Province of California employed by *Arkwright Mutual Insurance Company of Norwood, Massachusetts have inspected the components described in this Owner's Report during the period from 10/4/90 to 1/7/91 and state that to the best of my knowledge and belief, this repair or replacement has been performed in accordance with Section XI of the ASME Code. By signing this certificate, neither the Inspector nor his employer makes any warranty, expressed or implied, concerning the repair or replacement in this Report. Furthermore, neither the Inspector nor his employer shall be liable in any manner for any personal injury or property damage or a loss of any kind arising from or connected with this inspection. *Factory Mutual System

D. Thompson Commissions 1862 CA
Inspector's Signature (State or Province, National Board

Date January 7, 1991

Note: Supplemental sheets in form of lists, sketches, or drawings may be used provided (1) size is 8-1/2 in. x 11 in., (2) information in Items 1 through 4 on this data report is included on each sheet is recorded at the top of this form.

1. Owner: Southern California Edison Company
2244 Walnut Grove Ave.
Rosemead, CA 91770

Traveler: S01-90-024

Unit: 1

2. Plant: San Onofre Nuclear Generating Station
P. O. Box 128, San Clemente, CA 92672

DCP: 1-3601.00SM

3. Work Performed by: Bechtel Construction Co.
P. O. Box 450
San Clemente, CA 92672

CWO: 90080635000
90080845000

4. System Identification: Turbine Plant Cooling Water (TCW)

P&ID: 5178320

Name Component	Name of Manufacturer	Manufacturer Serial No.	National Board No.	Other Identification	Year Built	Repaired Replaced, or Replacement	ASME Code Stamped Yes/No
4" X 1/2" Threadolet	WFI Nuclear Products, Inc.	HT # 265SNR	N/A	Item 910 RSO #2613-90	N/A	Replacement	No
5-3 X 3/4" Sockolet	WFI Nuclear Products, Inc.	HT # 282RNB	N/A	Item 72 RSO #2613-90	N/A	Replacement	No
3/4" Pipe Sch Std/40	Quanex Corp.	HT # 282922	N/A	Item 213/216 RSO #2586-90	N/A	Replacement	No
3/4" Elbow 90° SW	Capitol Mfg. Co.	HT # R6S	N/A	Item 204 RSO #2586-90	N/A	Replacment	No
3/4" Globe Valve	Henry Vogt Machine Co.	SN 1-216215	N/A	Item 1 RSO #2937-90 S1-TCW-544	N/A	Replacement	No

ASME Section XI Abstract
Owner's Summary of Repair or Replacement

1. Owner: Southern California Edison Company
2244 Walnut Grove Ave.
Rosemead, CA 91770

Traveler: S01-90-026

Unit: 1

2. Plant: San Onofre Nuclear Generating Station
P. O. Box 128, San Clemente, CA 92672

MMP: 1-3601.00SM

3. Work Performed by: Bechtel Construction Co.
P. O. Box 450
San Clemente, CA 92672

CWO: 90080635000
90080856000

4. System Identification: Turbine Plant Cooling Water (TPCW) P&ID: 5178320

5. Plant Tag No.: See NIS-2 Serial No.: See NIS-2

6. Component: See NIS-2 Name: See NIS-2 Size: See NIS-2

7. Code: ASA B16.5, 1957 Ed. and ANSI B31.1, 1989 Ed. for valves, ANSI B31.1, 1980 Ed. for piping. Class: XI-2

8. Purpose (Statement of Problem):

MMP 1-3601.00SM reroute portion of line S1-TCW-CV-0743-8"-HM and add control valve S1-TCW-CV-2516.

Associated DWG's 5178320, 714472
FIDCN's M-7507, 7545, 7564

9. Narrative Summary (Brief Description of Work Performed):

1. The appropriate documents were reviewed to verify compliance with the applicable construction code.
2. Valves, piping and associated hardware were installed in accordance with MMP 1-3601.00SM and in accordance with WR5/5A weld records, A, B, C, D, SA, SB, SC, SD, SE, SF, SG and SH.
3. A system hydrostatic test with VT-2 was performed.

10. Material Used:

See NIS-2

Prepared by: Hoang Nguyen Date 12/26/90

NIS-2

OWNER'S REPORT OF REPAIR OR REPLACEMENT

As Required by the Provisions of ASME Code Section XI

==========

1. Owner: Southern California Edison Company
2244 Walnut Grove Ave.
Rosemead, CA 91770

Traveler: S01-90-026

Unit: 1

2. Plant: San Onofre Nuclear Generating Station
P. O. Box 128, San Clemente, CA 92672

MMP: 1-3601.00SM

3. Work Performed by: Bechtel Construction Co.
P. O. Box 450
San Clemente, CA 92672

CWO: 90080635000
90080856000

4. System Identification: Turbine Plant Cooling Water (TPCW) P&ID: 5178320

5. (a) Applicable Construction Code: ASA B16.5, 1957 Ed. and ANSI B31.1, 1989, for valves Code Class XI-2.
ANSI B31.1, 1980, for piping Code class: XI-2.

(b) Applicable Edition of Section XI Utilized for Repairs or Replacements:
1977 Edition, thru S'78 Addenda, Code Cases: N/A

6. Identification of Components Repaired or Replaced:

Name Component	Name of Manufacturer	Manufacturer Serial No.	National Board No.	Other Identification	Year Built	Repaired Replaced, or Replacement	ASME Code Stamped Yes/No
3/4" Globe Valve	Vogt	3-216215	N/A	Item #1 RSO #2937-90 S1-TCW-316	N/A	Replacement	No
3/4" Globe Valve	Vogt	4-216215	N/A	Item #1 RSO #2937-90 S1-TCW-315	N/A	Replacement	No
8" Control Valve	Velan Eng. Comp.	402159-2	N/A	Item #4 RSO #2641-90 S1-TCW-CV-2516	N/A	Replacement	No
8" Pipe Sch. 40S	USS Tubular Products	HT # B07850	N/A	Item #12 RSO #2586-90	N/A	Replacement	No
8"-3/4" Sockolet	WFI Nuclear Product Inc.	HT # 282 RNB	N/A	Item #70 RSO #2613-90	N/A	Replacement	No
3/4" Pipe Sch 40S	Quanex Corp.	HT # 282922	N/A	Item #213 RSO #2586-90	N/A	Replacement	No

7. Work Description:

MMP 1-3601.00SM installs control valve S1-TCW-CV-2516 and spool. Fabricate welds A, B, C, D, SA, SB, SC, SD, SE, SF, SG, and SH. Perform system hydrostatic test.

8. Tests Conducted: System Leakage [ ] System Functional [ ]
System Inservice [ ] Hydrostatic [X] Pneumatic [ ] Other [ ]
Pressure: 140 psig Temp: AMB

1. Owner: Southern California Edison Company
2244 Walnut Grove Ave.
Rosemead, CA 91770

Traveler: S01-90-026

Unit: 1

2. Plant: San Onofre Nuclear Generating Station
P. O. Box 128, San Clemente, CA 92672

MMP: 1-3601.00SM

3. Work Performed by: Bechtel Construction Co.
P. O. Box 450
San Clemente, CA 92672

CWO: 90080635000
90080856000

4. System Identification:

P&ID: 5178320

Name Component	Name of Manufacturer	Manufacturer Serial No.	National Board No.	Other Identification	Year Built	Repaired Replaced, or Replacement	ASME Code Stamped Yes/No
3/4" 90° Elbow	Capitol Mfg. Co.	HT # R6S	N/A	Item # 5 RSO #2586-90	N/A	Replacement	No
3/4" Half Coupling	Capitol Mfg. Co.	HT # 080D	N/A	Item #78 RSO #2586-90	N/A	Replacement	No
3/4" Pipe Sch 40S	Quanex Corp.	HT # 282922	N/A	Item #216 RSO #2586-90	N/A	Replacement	No

ASME Section XI Abstract
Owner's Summary of Repair or Replacement

1. Owner: Southern California Edison Company
2244 Walnut Grove Ave.
Rosemead, CA 91770

Traveler: S01-90-025

Unit: 1

2. Plant: San Onofre Nuclear Generating Station
P. O. Box 128, San Clemente, CA 92672

MMP: 1-3601.00SM

3. Work Performed by: Bechtel Construction Co.
P. O. Box 450
San Clemente, CA 92672

CWO: 90080845000
90080635000

4. System Identification: Turbine Plant Cooling (TCW)

P&ID: 5178320

5. Plant Tag No.: See NIS-2

Serial No.: See NIS-2

6. Component: See NIS-2

Name: See NIS-2 Size: See NIS-2

7. Code: ASA B16.5, 1957 Ed. and ANSI B31.1, 1980 Ed. for valves ASA B31.1, 1955 Ed. for piping. Class: XI-2

8. Purpose (Statement of Problem):

MMP 1-3601.00SM reroutes portion of line S1-TCW-0756-8"-HM and adds valve S1-TCW-CV-3515.

Associated DWG's: 714473, 5178320
FIDCN's M-7507, M-7565

9. Narrative Summary (Brief Description of Work Performed):

1. The appropriate documents were reviewed to verify compliance with the applicable construction code.
2. Valves, piping & associated hardware were installed in accordance with MMP 1-3601.00SM and in accordance with the WR5/5A weld records SA, SB, SC, SD, A, B, C, D, E, F, G and J.
3. A system hydrostatic test with VT-2 was performed.

10. Material Used:

See NIS-2

Prepared by: Les Taylor Date 12/26/90

NIS-2

OWNER'S REPORT OF REPAIR OR REPLACEMENT

As Required by the Provisions of ASME Code Section XI

==========

1. Owner: Southern California Edison Company
2244 Walnut Grove Ave.
Rosemead, CA 91770

Traveler: S01-90-025

Unit: 1

2. Plant: San Onofre Nuclear Generating Station
P. O. Box 128, San Clemente, CA 92672

MMP: 1-3601.00SM

3. Work Performed by: Bechtel Construction Co.
P. O. Box 450
San Clemente, CA 92672

CWO: 90080845000
90080635000

4. System Identification: Turbine Plant Cooling Water (TCW) P&ID: 5178320

5. (a) Applicable Construction Code: ASA B16.5, 1957 Ed. & ANSI B31.1, 1980 Ed. for valves Code Class: XI-2
ASA B31.1, 1955 Ed. for piping Code Class: XI-2.

(b) Applicable Edition of Section XI Utilized for Repairs or Replacements:
1977 Edition, thru S'78 Addenda, Code Cases: N/A

6. Identification of Components Repaired or Replaced:

Name Component	Name of Manufacturer	Manufacturer Serial No.	National Board No.	Other Identification	Year Built	Repaired Replaced, or Replacement	ASME Code Stamped Yes/No
3/4" Globe Valve	Henry Vogt Machie Co.	SN 2-216215	N/A	Item 1 RSO #2937-90	N/A	Replacement	No
8" Control Valve	Velan Eng. Comp.	SN 902159-1 S1-TCW-DV-3515	N/A	Item 4 RSO #2641-90	N/A	Replacement	No
8" Pipe Sch Std/40	USS Tubular Products	HT # B07850	N/A	Item 11 RSO #2586-90	N/A	Replacement	No
8" S.R. Elbow 90°	Taylor Forge	HT # LBBC	N/A	Item 271 RSO #2613-90	N/A	Replacement	No
8" Tee Sch. 40	Tube Forgings of America	HT # NN45	N/A	Item 950 RSO #2586-90	N/A	Replacement	No
8" x 4" Reducer	Tube Forgings of America	HT # F48	N/A	Item 951 RSO #2586-90	N/A	Replacement	No

7. Work Description:

MMP 1-3601.00SM, reroute line s1-TCW-0756-8"-HM and adds valve S1-TCW-CV-3515. Fabricate welds SA, SB, SC, SD, A, B, C, D, E, F, G, and J. Perform system hydrostatic test.

8. Tests Conducted: System Leakage [ ] System Functional [ ]
System Inservice [ ] Hydrostatic [X] Pneumatic [ ] Other [ ]
Pressure: 140 psig Temp: AMB

FORM NIS-2 (back)

9. Remarks:

Documentation for items listed in Block 6 are available onsite.
(Applicable Manufacturer's Data Reports to be attached)

CERTIFICATE OF COMPLIANCE

We certify that the statements made in this report are correct and this replacement conforms to the rules of the ASME Code, Section XI
(Repair or Replacement)

Signed Gary L. Allen FLD. CONST. MGR. Dec. 28, 1990
(Owner or Owner's Designee) Title (Date)

CERTIFICATE OF INSPECTION

I, the undersigned holding a valid commission issued by the National Board of Boiler and Pressure Vessel Inspectors and the State or Province of California employed by *Arkwright Mutual Insurance Company of Norwood, Massachusetts have inspected the components described in this Owner's Report during the period from 9/21/90 to 1/2/91 and state that to the best of my knowledge and belief, this repair or replacement has been performed in accordance with Section XI of the ASME Code. By signing this certificate, neither the Inspector nor his employer makes any warranty, expressed or implied, concerning the repair or replacement in this Report. Furthermore, neither the Inspector nor his employer shall be liable in any manner for any personal injury or property damage or a loss of any kind arising from or connected with this inspection. *Factory Mutual System

R. Thompson Commissions 1862 CA
Inspector's Signature (State or Province, National Board

Date January 2, 1991

Note: Supplemental sheets in form of lists, sketches, or drawings may be used provided (1) size is 8-1/2 in. x 11 in., (2) information in Items 1 through 4 on this data report is included on each sheet is recorded at the top of this form.

1. Owner: Southern California Edison Company
2244 Walnut Grove Ave.
Rosemead, CA 91770

Traveler:

Unit:

2. Plant: San Onofre Nuclear Generating Station
P. O. Box 128, San Clemente, CA 92672

DCP:

3. Work Performed by: Bechtel Construction Co.
P. O. Box 450
San Clemente, CA 92672

CWO:

4. System Identification:

P&ID:

Name Component	Name of Manufacturer	Manufacturer Serial No.	National Board No.	Other Identification	Year Built	Repaired Replaced, or Replacement	ASME Code Stamped Yes/No
8" X 3/4" Sockolet	WFI Nuclear Prod. Inc.	HT # 282 RNB	N/A	Item 70 RSO #2613-90	N/A	Replacement	No
3/4" Pipe Sch Std/40	Quanex Corp.	HT # 282922	N/A	Item 217 RSO # 2586-90	N/A	Replacement	No
3/4" Elbow 90°	Capitol Mfg. Co.	HT # R6S	N/A	Item 5 RSO #2586-90	N/A	Replacement	No

NIS-2
OWNER'S REPORT OF REPAIR OR REPLACEMENT
As Required by the Provisions of ASME Code Section XI

1. Owner: Southern California Edison Company
2244 Walnut Grove Ave.
Rosemead, CA 91770

Traveler: S01-91-008

Unit: 1

2. Plant: San Onofre Nuclear Generating Station
P. O. Box 128, San Clemente, CA 92674-0128

FCN: F-5517M

3. Work Performed by: Bechtel Construction Co.
P. O. Box 450
San Clemente, CA 92674-0128

CWO: 91020270000
91020491000

4. System Identification: Turbine Cooling Water (TCW)

P&ID: 5178320

5. (a) Applicable Construction Code: ASA B16.5, 1957 ED. Code Class: XI-2

(b) Applicable Edition of Section XI Utilized for Repairs or Replacements:
1977 Edition, thru S'78 Addenda, Code Cases: N/A

6. Identification of Components Repaired or Replaced:

Name Component	Name of Manufacturer	Manufacturer Serial No.	National Board No.	Other Identification	Year Built	Repaired Replaced, or Replacement	ASME Code Stamped Yes/No
1/2" Plate	Grano Steel Corp.	Heat No. V01003	N/A	RSO# 0147-91	N/A	Replacement	No

7. Work Description:

FCN F-5517M installs a flow direction indicator on valve S1-TCW-CV-515, fabricates welds, TA & TB

8. Tests Conducted: None

FORM NIS-2 (back)

9. Remarks:

Documentation for items listed in Block 6 are available onsite.
(Applicable Manufacturer's Data Reports to be attached)

CERTIFICATE OF COMPLIANCE

We certify that the statements made in this report are correct and this replacement conforms to the rules of the ASME Code, Section XI
(Repair or Replacement)

Signed [illegible] FIELD CONST MGR 3/19, 1991
(Owner or Owner's Designee) Title (Date)

CERTIFICATE OF INSPECTION

I, the undersigned holding a valid commission issued by the National Board of Boiler and Pressure Vessel Inspectors and the State or Province of California employed by *Arkwright Mutual Insurance Company of Norwood, Massachusetts have inspected the components described in this Owner's Report during the period from 2/13/91 to 3/19/91 and state that to the best of my knowledge and belief, this repair or replacement has been performed in accordance with Section XI of the ASME Code. By signing this certificate, neither the Inspector nor his employer makes any warranty, expressed or implied, concerning the repair or replacement in this Report. Furthermore, neither the Inspector nor his employer shall be liable in any manner for any personal injury or property damage or a loss of any kind arising from or connected with this inspection. *Factory Mutual System

[illegible] Commissions 1862 CA
Inspector's Signature (State or Province, National Board

Date March 19, 1991

Note: Supplemental sheets in form of lists, sketches, or drawings may be used provided (1) size is 8-1/2 in. x 11 in., (2) information in Items 1 through 4 on this data report is included on each sheet is recorded at the top of this form.

NIS-2
OWNER'S REPORT OF REPAIR OR REPLACEMENT
As Required by the Provisions of ASME Code Section XI

1. Owner: Southern California Edison Company
2244 Walnut Grove Ave.
Rosemead, CA 91770

Traveler: S01-91-009

Unit: 1

2. Plant: San Onofre Nuclear Generating Station
P. O. Box 128, San Clemente, CA 92674-0128

FCN: F-5516M

3. Work Performed by: Bechtel Construction Co.
P. O. Box 450
San Clemente, CA 92674-0128

CWO: 91020270000
91020488000

4. System Identification: Turbine Cooling Water (TCW)

P&ID: 5178320

5. (a) Applicable Construction Code: ASA B16.5, 1957 ED. Code Class: XI-2

(b) Applicable Edition of Section XI Utilized for Repairs or Replacements:
1977 Edition, thru S'78 Addenda, Code Cases: N/A

6. Identification of Components Repaired or Replaced:

Name Component	Name of Manufacturer	Manufacturer Serial No.	National Board No.	Other Identification	Year Built	Repaired Replaced, or Replacement	ASME Code Stamped Yes/No
1/2" Plate	Grano Steel Corp.	Heat No. V01003	N/A	RSO# 0147-91	N/A	Replacement	No

7. Work Description:

FCN F-5516M installs a flow direction indicator on valve S1-TCW-CV-516, fabricates welds, TA & TB

8. Tests Conducted: None

FORM NIS-2 (back)

9. Remarks:

Documentation for items listed in Block 6 are available onsite.
(Applicable Manufacturer's Data Reports to be attached)

CERTIFICATE OF COMPLIANCE

We certify that the statements made in this report are correct and this replacement conforms to the rules of the ASME Code, Section XI
(Repair or Replacement)

Signed [illegible] FIELD CONST MGR 3/19, 1991
(Owner or Owner's Designee) Title (Date)

CERTIFICATE OF INSPECTION

I, the undersigned holding a valid commission issued by the National Board of Boiler and Pressure Vessel Inspectors and the State or Province of California employed by *Arkwright Mutual Insurance Company of Norwood, Massachusetts have inspected the components described in this Owner's Report during the period from 2/13/91 to 3/19/91 and state that to the best of my knowledge and belief, this repair or replacement has been performed in accordance with Section XI of the ASME Code. By signing this certificate, neither the Inspector nor his employer makes any warranty, expressed or implied, concerning the repair or replacement in this Report. Furthermore, neither the Inspector nor his employer shall be liable in any manner for any personal injury or property damage or a loss of any kind arising from or connected with this inspection. *Factory Mutual System

[illegible] Commissions 1862 CA
Inspector's Signature (State or Province, National Board

Date March 19, 1991

Note: Supplemental sheets in form of lists, sketches, or drawings may be used provided (1) size is 8-1/2 in. x 11 in., (2) information in Items 1 through 4 on this data report is included on each sheet is recorded at the top of this form.

NIS-2
OWNER'S REPORT OF REPAIR OR REPLACEMENT
As Required by the Provisions of ASME Code Section XI

1. Owner: Southern California Edison Company
2244 Walnut Grove Ave.
Rosemead, CA 91770

Traveler: S01-91-012

Unit: 1

2. Plant: San Onofre Nuclear Generating Station
P. O. Box 128, San Clemente, CA 92674-0128

FCN: F-5518M

3. Work Performed by: Bechtel Construction Co.
P. O. Box 450
San Clemente, CA 92674-0128

CWO: 91020270000
91020495000

4. System Identification: Turbine Cooling Water (TCW)

P&ID: 5178130

5. (a) Applicable Construction Code: ASA B16.5, 1957 ED. Code Class: XI-2

(b) Applicable Edition of Section XI Utilized for Repairs or Replacements:
1977 Edition, thru S'78 Addenda, Code Cases: N/A

6. Identification of Components Repaired or Replaced:

Name Component	Name of Manufacturer	Manufacturer Serial No.	National Board No.	Other Identification	Year Built	Repaired Replaced, or Replacement	ASME Code Stamped Yes/No
1/2" Plate	Grano Steel Corp.	Heat No. V01003	N/A	RSO# 0147-91	N/A	Replacement	No

7. Work Description:

FCN F-5518M installs a flow direction indicator on valve S1-TCW-CV-525, fabricates welds, TA & TB

8. Tests Conducted: None

FORM NIS-2 (back)

9. Remarks:

Documentation for items listed in Block 6 are available onsite.
(Applicable Manufacturer's Data Reports to be attached)

CERTIFICATE OF COMPLIANCE

We certify that the statements made in this report are correct and this replacement conforms to the rules of the ASME Code, Section XI
(Repair or Replacement)

Signed W A Macondray FIELD CONST MGR 3/19, 1991
(Owner or Owner's Designee) Title (Date)

CERTIFICATE OF INSPECTION

I, the undersigned holding a valid commission issued by the National Board of Boiler and Pressure Vessel Inspectors and the State or Province of California employed by *Arkwright Mutual Insurance Company of Norwood, Massachusetts have inspected the components described in this Owner's Report during the period from 2/13/91 to 3/19/91 and state that to the best of my knowledge and belief, this repair or replacement has been performed in accordance with Section XI of the ASME Code. By signing this certificate, neither the Inspector nor his employer makes any warranty, expressed or implied, concerning the repair or replacement in this Report. Furthermore, neither the Inspector nor his employer shall be liable in any manner for any personal injury or property damage or a loss of any kind arising from or connected with this inspection. *Factory Mutual System

C R Thompson Commissions 1862 CA
Inspector's Signature (State or Province, National Board

Date March 19, 1991

Note: Supplemental sheets in form of lists, sketches, or drawings may be used provided (1) size is 8-1/2 in. x 11 in., (2) information in Items 1 through 4 on this data report is included on each sheet is recorded at the top of this form.

NIS-2
OWNER'S REPORT OF REPAIR OR REPLACEMENT

As Required by the Provisions of ASME Code Section XI

Sheet 1 of 1

1. Owner: Southern California Edison Company
2244 Walnut Grove Ave., Rosemead, CA 91770

ASME MO: 890S3644

Unit: 1

2. Plant: San Onofre Nuclear Generating Station
P.O. Box 128, San Clemente, CA 92674-0128

RS: 731-89

3. Work Performed by: Southern California Edison

P&ID: 5178231 (B-2)

4. System Identification: High Pressure Turbine

5. (a) Applicable Construction Code: Valve: BSO-561, M-18690; System: ASME Section I, 1962 Edition, Code Classified XI-2, Code Cases: None

(b) Applicable Edition of Section XI Utilized for Repairs or Replacements: 1977 Edition, S'78 Addenda, Code Cases: None

6. Identification of Components Repaired or Replaced:

Name of Component	Name of Manufacturer	Manufacturer Serial No.	National Board No.	Other Identification	Year Built	Repaired, Replaced, or Replacement	ASME Code Stamped Yes/No
6" Gate Valve	Pacific Valve	44750A	N/A	S1-THP-MOV-14	N/A	---	No
1/4" NPT Plug	Colonial Machine Co.	Ht. Code AEM	N/A	RSO 2291-90 SA-105	N/A	Replacement	No

7. Work Description:

Packing gland leak-off plug was seal welded in conjunction with the installation of live-load packing. Welding was performed in accordance with ASME Section III, 1989 Edition, no Addenda, as provided for in ASME Section XI, paragraph IWA-4120. The replacement packing gland leak-off plug was verified to be in compliance with the original construction code. After reinstallation a seal weld was performed to the plug/valve bonnet. A NDE-MT (1MT-023-90) was conducted on the affected weld area with no relevant indications. A VT-2 examination was conducted in conjunction with a system functional pressure test with no leakage noted.

References: WR1-89-979, Packing Manual M-40658

8. Tests Conducted: System Leakage [ ] System Functional [ ] System Inservice [ ] Hydrostatic [ ] Pneumatic [ ] Other [ ]
Pressure: 555 psig Temp: N/A

FORM NIS-2 (back)

9. **Remarks:** None

(Applicable Manufacturer's Data Reports to be attached)

CERTIFICATE OF COMPLIANCE

We certify that the statements made in this report are correct and this replacement (repair or replacement) conforms to the rules of the ASME Code, Section XI.

Signed [illegible] (Owner or Owner's Designee) Supvg. ASME Codes Engineer (Title) 6/6 (Date) 1991

CERTIFICATE OF INSPECTION

I, the undersigned holding a valid commission issued by the National Board of Boiler and Pressure Vessel Inspectors and the State or Province of California, employed by Arkwright Mutual Insurance Company (Factory Mutual System) of Norwood, Massachusetts have inspected the components described in this Owner's Report during the period from 5/29/90 to 6/7/91 and state that to the best of my knowledge and belief, this repair or replacement has been performed in accordance with Section XI of the ASME Code. By signing this certificate, neither the Inspector nor his employer makes any warranty, expressed or implied, concerning the repair or replacement in this Report. Furthermore, neither the Inspector nor his employer shall be liable in any manner for any personal injury or property damage or a loss of any kind arising from or connected with this inspection.

[illegible] Commissions 1362 California
Inspector's Signature (State or Province, National Board)

Date June 7, 1991

Note: Supplemental sheets in the form of lists, sketches, or drawings may be used provided (1) size is 8-1/2 in. x 11 in., (2) information in Items 1 through 4 on this data report is included on each sheet, and (3) each sheet is numbered and the number of sheets is recorded at the top of this form.

NIS-2

OWNER'S REPORT OF REPAIR OR REPLACEMENT

As Required by the Provisions of ASME Code Section XI

1. Owner: Southern California Edison Company
2244 Walnut Grove Ave., Rosemead, CA 91770

ASME MO: 90090911000
90090911001

Unit: 1

2. Plant: San Onofre Nuclear Generating Station
P.O. Box 128, San Clemente, CA 92674-0128

RS: 323-90 Rev. 1

P&ID: 5178135 (F-6)

3. Work Performed by: Southern California Edison

4. System Identification: Volume Control and Charging

5. (a) Applicable Construction Code: ASA B31.1, 1955 Edition, Code Classified: XI-2, Code Cases: None

(b) Applicable Edition of Section XI Utilized for Repairs or Replacements: 1977 Edition, S'78 Addenda, Code Cases: None

6. Identification of Components Repaired or Replaced:

Name of Component	Name of Manufacturer	Manufacturer Serial No.	National Board No.	Other Identification	Year Built	Repaired, Replaced, or Replacement	ASME Code Stamped Yes/No
2" Sch 160 Piping	N/A	N/A	N/A	S1-VCC-2003-3"-BH3	N/A	Repaired	No

7. Work Description:

Arc strikes documented on NCR 90090060 were blended out. Less than 1/32" of base material was removed. No weld repairs were required. The blended areas were examined by UT to verify the minimum required design wall thickness.

Reference: NCR 90090060

8. Tests Conducted: System Leakage [ ] System Functional [ ] System Inservice [ ] Hydrostatic [ ] Pneumatic [ ] Other [ ]
Pressure: N/A psig Temp: N/A °F

FORM NIS-2 (back)

9. **Remarks:** None

(Applicable Manufacturer's Data Reports to be attached)

CERTIFICATE OF COMPLIANCE

We certify that the statements made in this report are correct and this repair (repair or replacement) conforms to the rules of the ASME Code, Section XI.

Signed [signature] (Owner or Owner's Designee) Supvg. ASME Codes Engineer (Title) 23 April 1991 (Date)

CERTIFICATE OF INSPECTION

I, the undersigned holding a valid commission issued by the National Board of Boiler and Pressure Vessel Inspectors and the State or Province of California, employed by Arkwright Mutual Insurance Company (Factory Mutual System) of Norwood, Massachusetts have inspected the components described in this Owner's Report during the period from 9/25/90 to 4/20/91 and state that to the best of my knowledge and belief, this repair or replacement has been performed in accordance with Section XI of the ASME Code. By signing this certificate, neither the Inspector nor his employer makes any warranty, expressed or implied, concerning the repair or replacement in this Report. Furthermore, neither the Inspector nor his employer shall be liable in any manner for any personal injury or property damage or a loss of any kind arising from or connected with this inspection.

[signature] Commissions California 1574
Inspector's Signature (State or Province, National Board)

Date April 24 1991

Note: Supplemental sheets in the form of lists, sketches, or drawings may be used provided (1) size is 8-1/2 in. x 11 in., (2) information in Items 1 through 4 on this data report is included on each sheet, and (3) each sheet is numbered and the number of sheets is recorded at the top of this form.

NIS-2
OWNER'S REPORT OF REPAIR OR REPLACEMENT

As Required by the Provisions of ASME Code Section XI

Sheet 1 of 1

1. Owner: Southern California Edison Company
2244 Walnut Grove Ave., Rosemead, CA 91770

ASME MO: 91010368

Unit: 1

2. Plant: San Onofre Nuclear Generating Station
P.O. Box 128, San Clemente, CA 92674-0128

RS: 003-91

P&ID: 5178135 (H-3)

3. Work Performed by: Southern California Edison

4. System Identification: Volume Control & Changing System

5. (a) Applicable Construction Code: ASA B31.1, 1955 Edition, Code Classified XI-2), Code Cases: None

(b) Applicable Edition of Section XI Utilized for Repairs or Replacements: 1977 Edition, S'78 Addenda, Code Cases: None

6. Identification of Components Repaired or Replaced:

Name of Component	Name of Manufacturer	Manufacturer Serial No.	National Board No.	Other Identification	Year Built	Repaired, Replaced, or Replacement	ASME Code Stamped Yes/No
Pipe	N/A	S1-VCC-2013-½-HK	N/A	S1-VCC-2013	N/A	---	No
1½" x 6" Bar Stock	CyTemp	1G7203	N/A	RSO 3608-90 SA-479, Tp 316	1990	Replacement	No

7. Work Description:

A plug was fabricated out of bar stock and installed on line 2013 because S1-VCC-317 could not be tested for seat leakage. The processed required cutting out a section of line 2013 for installation of the plug between S1-VCC-316 and 317 (approx. distance 2"). The replacement material was verified as being compatible with the installation and system requirements. The bar stock was installed by welding.

Reference: NCR 91010019, WR1-91-004, FCN S-5458-M, S5457M

8. Tests Conducted: System Leakage [ ] System Functional [X] System Inservice [ ] Hydrostatic [ ] Pneumatic [ ] Other [ ]
Pressure: 20 psig Temp: N/A

FORM NIS-2 (back)

9. **Remarks:** None

(Applicable Manufacturer's Data Reports to be attached)

CERTIFICATE OF COMPLIANCE

We certify that the statements made in this report are correct and this replacement (repair or replacement) conforms to the rules of the ASME Code, Section XI.

Signed [signature] (Owner or Owner's Designee) Supvg. ASME Codes Engineer (Title) 21 March (Date) 19 91

CERTIFICATE OF INSPECTION

I, the undersigned holding a valid commission issued by the National Board of Boiler and Pressure Vessel Inspectors and the State or Province of California, employed by Arkwright Mutual Insurance Company (Factory Mutual System) of Norwood, Massachusetts have inspected the components described in this Owner's Report during the period from 1/5/91 to 3/21/91 and state that to the best of my knowledge and belief, this repair or replacement has been performed in accordance with Section XI of the ASME Code. By signing this certificate, neither the Inspector nor his employer makes any warranty, expressed or implied, concerning the repair or replacement in this Report. Furthermore, neither the Inspector nor his employer shall be liable in any manner for any personal injury or property damage or a loss of any kind arising from or connected with this inspection.

[signature] Commissions 1862 California
Inspector's Signature (State or Province, National Board)

Date March 21, 19 91

Note: Supplemental sheets in the form of lists, sketches, or drawings may be used provided (1) size is 8-1/2 in. x 11 in., (2) information in Items 1 through 4 on this data report is included on each sheet, and (3) each sheet is numbered and the number of sheets is recorded at the top of this form.

NIS-2

OWNER'S REPORT OF REPAIR OR REPLACEMENT

As Required by the Provisions of ASME Code Section XI

1. Owner: Southern California Edison Company
2244 Walnut Grove Ave., Rosemead, CA 91770

ASME MO: 90070262

Unit: 1

2. Plant: San Onofre Nuclear Generating Station
P.O. Box 128, San Clemente, CA 92674-0128

RS: 268-90

3. Work Performed by: Southern California Edison

P&ID: 5178135 (G-6)

4. System Identification: Volume Control and Charging

5. (a) Applicable Construction Code: ASA B31.1, 1955 Edition (System), Westinghouse E-Spec. 675268 (Valve), Code Classified XI-2, Code Cases: None

(b) Applicable Edition of Section XI Utilized for Repairs or Replacements: 1977 Edition, S'78 Addenda, Code Cases: None

6. Identification of Components Repaired or Replaced:

Name of Component	Name of Manufacturer	Manufacturer Serial No.	National Board No.	Other Identification	Year Built	Repaired, Replaced, or Replacement	ASME Code Stamped Yes/No
2" Globe Valve	Edwards	N/A	N/A	S1-VCC-307	N/A	Replaced	No
2" Gate Valve	Anchor/ Darling	EB267-4-7	N/A	RSO 1926-90 SA-351, Gr CF8M	1990	Replacement	Yes
2" Sch. 160 Pipe	Combustion Engineering	N/A	N/A	RSO 2198-90 SA-312, Tp. 304L ME-90-046	N/A	Replacement	No

7. Work Description:

Per MMP 1-3617.OOSM, the existing globe valve was removed in preparation for the installation of the replacement gate valve. The replacement gate valve was verified as being suitable for plant position S1-VCC-307 as documented on Code Reconciliation CR-89-002. The replacement pipe was verified as meeting ASA B31.1 as documented on Code Reconciliation ME-90-046. The replacement items were installed in accordance WR1-90-540. PT examinations were performed on the socketwelds and radiographic examinations were performed on the buttwelds.

8. Tests Conducted: System Leakage [ ] System Functional [ ] System Inservice [ ] Hydrostatic [X] Pneumatic [ ] Other [X] VT-2 examination was performed.
Pressure: 3600 psig Temp: N/A

FORM NIS-2 (back)

9. Remarks: None

(Applicable Manufacturer's Data Reports to be attached)

CERTIFICATE OF COMPLIANCE

We certify that the statements made in this report are correct and this replacement (repair or replacement) conforms to the rules of the ASME Code, Section XI.

Signed _____ (Owner or Owner's Designee) Supvg. ASME Codes Engineer (Title) 4/19 (Date) 1991

CERTIFICATE OF INSPECTION

I, the undersigned holding a valid commission issued by the National Board of Boiler and Pressure Vessel Inspectors and the State or Province of California, employed by Arkwright Mutual Insurance Company (Factory Mutual System) of Norwood, Massachusetts have inspected the components described in this Owner's Report during the period from 09/04/90 to 04/20/91 and state that to the best of my knowledge and belief, this repair or replacement has been performed in accordance with Section XI of the ASME Code. By signing this certificate, neither the Inspector nor his employer makes any warranty, expressed or implied, concerning the repair or replacement in this Report. Furthermore, neither the Inspector nor his employer shall be liable in any manner for any personal injury or property damage or a loss of any kind arising from or connected with this inspection.

Inspector's Signature _____ Commissions 1864 California (State or Province, National Board)

Date April 20 1991

Note: Supplemental sheets in the form of lists, sketches, or drawings may be used provided (1) size is 8-1/2 in. x 11 in., (2) information in Items 1 through 4 on this data report is included on each sheet, and (3) each sheet is numbered and the number of sheets is recorded at the top of this form.

NIS-2
OWNER'S REPORT OF REPAIR OR REPLACEMENT

As Required by the Provisions of ASME Code Section XI

Sheet 1 of 1

1. Owner: Southern California Edison Company
   2244 Walnut Grove Ave., Rosemead, CA 91770

ASME MO: 90070268

Unit: 1

2. Plant: San Onofre Nuclear Generating Station
   P.O. Box 128, San Clemente, CA 92674-0128

RS: 267-90

3. Work Performed by: Southern California Edison

P&ID: 5178135 (F-6)

4. System Identification: Volume and Chemical Control

5. (a) Applicable Construction Code: ASA B31.1, 1955 Edition, Westinghouse E. Spec E676171, Code Classified XI-2, Code Cases: None

   (b) Applicable Edition of Section XI Utilized for Repairs or Replacements: 1977 Edition, S'78 Addenda, Code Cases: None

6. Identification of Components Repaired or Replaced:

Name of Component	Name of Manufacturer	Manufacturer Serial No.	National Board No.	Other Identification	Year Built	Repaired, Replaced, or Replacement	ASME Code Stamped Yes/No
2" Globe Valve	Anchor Darling	N/A	N/A	S1-VCC-308	N/A	Replaced	N/A
2" Globe Valve	Anchor Darling	EB267-4-10	N/A	RSO 1926-90 SA351-CF8M	1990	Replacement	Yes (N)
2" Sch 160 Pipe	Guyon Alloys, Inc.	Ht. L21284	N/A	RSO 2198-90 SA-312, Tp. 304L	N/A	Replacement	No

7. Work Description:

The existing globe valve was replaced with an Anchor Darling 1878 class double disc gate valve per design change MMP #1-3617.OOSM. Code differences between the original construction code/specification were reconciled for the replacement valve and pipe. The replacements were welded into the system in accordance with WR1-90-539. A PT examination was performed on the socket welds and the butt weld was examined by radiography.

Reference: Reconciliation CR-89-002, Rev.1 (replacement valve)
Reconciliation ME-90-47 (replacement pipe)

8. Tests Conducted: System Leakage [ ] System Functional [ ] System Inservice [ ] Hydrostatic [X] Pneumatic [ ] Other [X] VT-2 Examination
Pressure: 3600 psig Temp: Ambient

FORM NIS-2 (back)

9. **Remarks:** None

(Applicable Manufacturer's Data Reports to be attached)

CERTIFICATE OF COMPLIANCE

We certify that the statements made in this report are correct and this replacement (repair or replacement) conforms to the rules of the ASME Code, Section XI.

Signed [signature] (Owner or Owner's Designee) Supvg. ASME Codes Engineer (Title) 6 MAY (Date) 19 91

CERTIFICATE OF INSPECTION

I, the undersigned holding a valid commission issued by the National Board of Boiler and Pressure Vessel Inspectors and the State or Province of California, employed by Arkwright Mutual Insurance Company (Factory Mutual System) of Norwood, Massachusetts have inspected the components described in this Owner's Report during the period from 09/05/90 to 05/09/91 and state that to the best of my knowledge and belief, this repair or replacement has been performed in accordance with Section XI of the ASME Code. By signing this certificate, neither the Inspector nor his employer makes any warranty, expressed or implied, concerning the repair or replacement in this Report. Furthermore, neither the Inspector nor his employer shall be liable in any manner for any personal injury or property damage or a loss of any kind arising from or connected with this inspection.

[signature] Commissions 1864 California

Inspector's Signature (State or Province, National Board)

Date May 9 19 91

Note: Supplemental sheets in the form of lists, sketches, or drawings may be used provided (1) size is 8-1/2 in. x 11 in., (2) information in Items 1 through 4 on this data report is included on each sheet, and (3) each sheet is numbered and the number of sheets is recorded at the top of this form.

NIS-2
OWNER'S REPORT OF REPAIR OR REPLACEMENT

As Required by the Provisions of ASME Code Section XI

1. **Owner:** Southern California Edison Company
   2244 Walnut Grove Ave., Rosemead, CA 91770

   ASME MO: 89112850, 90031813

   Unit: 1

2. **Plant:** San Onofre Nuclear Generating Station
   P.O. Box 128, San Clemente, CA 92674-0128

   RS: 120-90, 147-90

3. **Work Performed by:** Southern California Edison

   P&ID: 5178136/grid F-7

4. **System Identification:** Chemical and Volume Control (VCC)

5. (a) **Applicable Construction Code:** ASA B31.1, 1955 Edition (Piping System) Cases: None
   (Applicable Valve Manufacturing Code: Westinghouse Equipment Specification 675268)

   (b) **Applicable Edition of ASME B&PV Section XI Utilized for Repairs or Replacements:** 1977 Edition, S'78 Addenda, Code Cases: None

6. **Identification of Components Repaired or Replaced:**

Name of Component	Name of Manufacturer	Manufacturer Serial No.	National Board No.	Other Identification	Year Built	Repaired, Replaced, or Replacement	ASME Code Stamped Yes/No
1" S.S. Globe Valve	Powell Valve Co.	not recorded	N/A	S1-VCC-354	N/A	Replaced	No
1" S.S. Globe Valve	Powell Valve Co.	1499	N/A	RSO 2614-89	N/A	Replacement	No

7. **Work Description:**

The valve leaked by excessively and was scheduled for replacement. The valve procured for this replacement did not have evidence that a proper hydrostatic pressure test or seat leakage pressure test had been performed and was not certified as meeting the original Westinghouse equipment specification requirements. The replacement valve was successfully subjected to a hydrostatic test and a seat leakage test by SCE as documented in ASME M.O. 90031813. An ASME Section XI IWA-7210 (c) substitute material evaluation was performed and the valve was found to be acceptable. Reference ASME XI Certificate of Compliance number ME-90-15. The valve was installed by welding as documented on safety related ASME XI weld record WR1-90-292 and non-safety related weld record WR1-90-293 (the valve is boundary).

8. **Tests Conducted:** System Leakage [ ] System Functional [ ] System Inservice [ ] Hydrostatic [x] Pneumatic [ ] Other [ ]
   Pressure: 156 psig Temp: not recorded (ambient)

FORM NIS-2 (back)

9. Remarks: The hydrostatic tests of the valve performed as per M.O. 90031813 was as follows:

A) full valve body/bonnet: 670 psig for 10 minutes
B) seat leakage (closure) test: 530 psig for 10 minutes

(Applicable Manufacturer's Data Reports to be attached)

CERTIFICATE OF COMPLIANCE

We certify that the statements made in this report are correct and this replacement (repair or replacement) conforms to the rules of the ASME Code, Section XI.

Signed [signature] (Owner or Owner's Designee) Supvg. ASME Codes Engineer (Title) 1-24 (Date) 1991

CERTIFICATE OF INSPECTION

I, the undersigned holding a valid commission issued by the National Board of Boiler and Pressure Vessel Inspectors and the State or Province of California, employed by Arkwright Mutual Insurance Company (Factory Mutual System) of Norwood, Massachusetts have inspected the components described in this Owner's Report during the period from 4/14/90 to 1/27/91 and state that to the best of my knowledge and belief, this repair or replacement has been performed in accordance with Section XI of the ASME Code. By signing this certificate, neither the Inspector nor his employer makes any warranty, expressed or implied, concerning the repair or replacement in this Report. Furthermore, neither the Inspector nor his employer shall be liable in any manner for any personal injury or property damage or a loss of any kind arising from or connected with this inspection.

[signature] Commissions 1862 California
Inspector's Signature (State or Province, National Board)

Date January 27, 1991

Note: Supplemental sheets in the form of lists, sketches, or drawings may be used provided (1) size is 8-1/2 in. x 11 in., (2) information in Items 1 through 4 on this data report is included on each sheet, and (3) each sheet is numbered and the number of sheets is recorded at the top of this form.

NIS-2
OWNER'S REPORT OF REPAIR OR REPLACEMENT
As Required by the Provisions of ASME Code Section XI

1. Owner: Southern California Edison Company
2244 Walnut Grove Ave.
Rosemead, CA 91770

Traveler: S01-91-015

Unit: 1

2. Plant: San Onofre Nuclear Generating Station
P. O. Box 128, San Clemente, CA 92674-0128

FCN: F-5519M

3. Work Performed by: Bechtel Construction Co.
P. O. Box 450
San Clemente, CA 92674-0128

CWO: 91020270000
91020498000

4. System Identification: (VCC) Volume Control & Charging

P&ID: 5178136

5. (a) Applicable Construction Code: ASA B16.5, 1957 ED. Code Class: XI-2

(b) Applicable Edition of Section XI Utilized for Repairs or Replacements:
1977 Edition, thru S'78 Addenda, Code Cases: N/A

6. Identification of Components Repaired or Replaced:

Name Component	Name of Manufacturer	Manufacturer Serial No.	National Board No.	Other Identification	Year Built	Repaired Replaced, or Replacement	ASME Code Stamped Yes/No
1/2" Plate	Grano Steel Corp.	Heat No. V01003	N/A	RSO# 0147-91	N/A	Replacement	No

7. Work Description:

FCN F-5519M installs a flow direction indicator on valve S1-VCC-CV-528, fabricates welds, TC & TD

8. Tests Conducted: None

FORM NIS-2 (back)

9. Remarks:

Documentation for items listed in Block 6 are available onsite.
(Applicable Manufacturer's Data Reports to be attached)

CERTIFICATE OF COMPLIANCE

We certify that the statements made in this report are correct and this replacement conforms to the rules of the ASME Code, Section XI
(Repair or Replacement)

Signed [illegible] FIELD CONST MGR 3/19, 1991
(Owner or Owner's Designee) Title (Date)

CERTIFICATE OF INSPECTION

I, the undersigned holding a valid commission issued by the National Board of Boiler and Pressure Vessel Inspectors and the State or Province of California employed by *Arkwright Mutual Insurance Company of Norwood, Massachusetts have inspected the components described in this Owner's Report during the period from 2/13/91 to 3/19/91 and state that to the best of my knowledge and belief, this repair or replacement has been performed in accordance with Section XI of the ASME Code. By signing this certificate, neither the Inspector nor his employer makes any warranty, expressed or implied, concerning the repair or replacement in this Report. Furthermore, neither the Inspector nor his employer shall be liable in any manner for any personal injury or property damage or a loss of any kind arising from or connected with this inspection. *Factory Mutual System

[illegible] Commissions 1862 CA
Inspector's Signature (State or Province, National Board

Date March 19, 1991

Note: Supplemental sheets in form of lists, sketches, or drawings may be used provided (1) size is 8-1/2 in. x 11 in., (2) information in Items 1 through 4 on this data report is included on each sheet is recorded at the top of this form.

ASME Section XI Abstract
Owner's Summary of Repair or Replacement

1. Owner: Southern California Edison Company
2244 Walnut Grove Ave.
Rosemead, CA 91770

Traveler: S01-90-035

Unit: 1

2. Plant: San Onofre Nuclear Generating Station
P. O. Box 128, San Clemente, CA 92672

MMP: 1-3659.00SN

3. Work Performed by: Bechtel Construction Co.
P. O. Box 450
San Clemente, CA 92672

CWO: 90110797000
90110760000
90110840000

4. System Identification: Volume Control and Charging System (VCC) P&ID: 5178032

5. Plant Tag No.: S1-VCC-MOV-1100E Serial No.: See NIS-2

6. Component: See NIS-2 Name: See NIS-2 Size: 4"

7. Code: ASA B31.1, 1955 Ed. for Piping Class: XI-2
ASA B16.5, 1957 Ed. for Valves

8. Purpose (Statement of Problem):

MMP 1-3659.00SN, Rev. 0 adds S1-VCC-MOV-1100E and Relocates S1-VCC-MOV-1100C.

Associated Dwgs: 334629, 5217786, FIDCN M-7624

9. Narrative Summary (Brief Description of Work Performed):

1.) The appropriate documents were reviewed to verify compliance with applicable construction code.

2.) Valves, piping and associated hardware were installed in accordance with MMP 1-3659.00SN and in accordance with WR5/5A weld records as follows:
DWG. 334629 - A, B, C, D, E, F, G, SA, SB, SC, SD

DWG. 5217786 - SA

3.) A system hydrostatic test with VT-2 was performed.

10. Material Used:

See NIS-2

Prepared by: Les Taylor Date 2/21/91

NIS-2

OWNER'S REPORT OF REPAIR OR REPLACEMENT

As Required by the Provisions of ASME Code Section XI

==========

1. Owner: Southern California Edison Company
2244 Walnut Grove Ave.
Rosemead, CA 91770

Traveler: S01-90-035

Unit: 1

2. Plant: San Onofre Nuclear Generating Station
P. O. Box 128, San Clemente, CA 92672

MMP: 1-3659.00SN

3. Work Performed by: Bechtel Construction Co.
P. O. Box 450
San Clemente, CA 92672

CWO: 90110797000
90110760000
90110840000

4. System Identification: Volume Control and Charging System (VCC) P&ID: 5178032

5. (a) Applicable Construction Code: ASA B16.5, 1957 Ed., for Valves
ASA B31.1, 1955 Ed., for Pipe, CODE CLASS: XI-2

(b) Applicable Edition of Section XI Utilized for Repairs or Replacements:
1977 Edition, thru S'78 Addenda, Code Cases: N/A

6. Identification of Components Repaired or Replaced:

Name Component	Name of Manufacturer	Manufacturer Serial No.	National Board No.	Other Identification	Year Built	Repaired Replaced, or Replacement	ASME Code Stamped Yes/No
4" Elbow 90°	HUB	HT #460291	N/A	Item #3,6 RSO #3465-90	N/A	Replaced	No
4" Dia Pipe	HUB	HT #L31277		Item #4, 8 RSO #3465-90	N/A	Replaced	No
4" x 1" Sockolet	HUB	HT #242SNA		Item #5 RSO #3465-90	N/A	Replaced	No
1" Dia Pipe	HUB	HT #470771		Item #9,11 RSO #3465-90	N/A	Replaced	No

7. Work Description:

MMP 1-3659.00SN, Rev. 0, add S1-VCC-MOV-1100E, and relocate S1-VCC-MOV-1100C. Fabricate welds (DWG 334629) A, B, C, D, E, F, G, SA, SB, SC, SD & (DWG 5217786) SA. Perform system hydrostatic test.

8. Tests Conducted: System Leakage [ ] System Functional [ ]
System Inservice [ ] Hydrostatic [X] Pneumatic [ ] Other [ ]
Pressure: 188 psig Temp: 62 °F

FORM NIS-2 (back)

9. Remarks:

Documentation for items listed in Block 6 are available onsite.
(Applicable Manufacturer's Data Reports to be attached)

CERTIFICATE OF COMPLIANCE

We certify that the statements made in this report are correct and this replacement conforms to the rules of the ASME Code, Section XI
(Repair or Replacement)

Signed [illegible] Fld. Const. Mgr. / Bec Code Eng. 2-21, 1991
(Owner or Owner's Designee) Title (Date)

CERTIFICATE OF INSPECTION

I, the undersigned holding a valid commission issued by the National Board of Boiler and Pressure Vessel Inspectors and the State or Province of California employed by *Arkwright Mutual Insurance Company of Norwood, Massachusetts have inspected the components described in this Owner's Report during the period from 12/17/90 to 2/23/91 and state that to the best of my knowledge and belief, this repair or replacement has been performed in accordance with Section XI of the ASME Code. By signing this certificate, neither the Inspector nor his employer makes any warranty, expressed or implied, concerning the repair or replacement in this Report. Furthermore, neither the Inspector nor his employer shall be liable in any manner for any personal injury or property damage or a loss of any kind arising from or connected with this inspection. *Factory Mutual System

[illegible] Commissions 1862 CA
Inspector's Signature (State or Province, National Board

Date February 23, 1991

Note: Supplemental sheets in form of lists, sketches, or drawings may be used provided (1) size is 8-1/2 in. x 11 in., (2) information in Items 1 through 4 on this data report is included on each sheet is recorded at the top of this form.

1. Owner: Southern California Edison Company
2244 Walnut Grove Ave.
Rosemead, CA 91770

Traveler: S01-90-035

Unit: 1

2. Plant: San Onofre Nuclear Generating Station
P. O. Box 128, San Clemente, CA 92672

MMP: 1-3659.00SN

3. Work Performed by: Bechtel Construction Co.
P. O. Box 450
San Clemente, CA 92672

CWO: 90110797000
90110760000
90110840000

4. System Identification: Vol. Control and Charging System (VCC)

P&ID: 5178032

Name Component	Name of Manufacturer	Manufacturer Serial No.	National Board No.	Other Identification	Year Built	Repaired Replaced, or Replacement	ASME Code Stamped Yes/No
1" Elbow 90°	HUB	HT #12579	N/A	Item #10 RSO #3465-90	N/A	Replaced	No
1/2" Dia Pipe Cap	CAMCO	HT #EGO	N/A	Item #45 RSO #3589-90	N/A	Replaced	No
4" Valve	Westinghouse	Serial No. 040000GM82 - FDB18D00S740001	N/A	Item #2 RSO #3272-90	1977	Replaced	Yes
1" Valve	VOGT	Serial No. 1-216108	N/A	Item #12 RSO #3562-90	N/A	Replaced	No

NIS-2
OWNER'S REPORT OF REPAIR OR REPLACEMENT

As Required by the Provisions of ASME Code Section XI

1. Owner: Southern California Edison Company
2244 Walnut Grove Ave., Rosemead, CA 91770

ASME MO: 90010413

Unit: 1

2. Plant: San Onofre Nuclear Generating Station
P.O. Box 128, San Clemente, CA 92674-0128

RS: 104-90

3. Work Performed by: Southern California Edison

P&ID: 5178136

4. System Identification: Volume and Chemical Control

5. (a) Applicable Construction Code: ASME Section VIII, Westinhouse E-Spec. 675262 & M-35760, Code Cases: None

(b) Applicable Edition of Section XI Utilized for Repairs or Replacements: 1977 Edition, S'78 Addenda, Code Cases: None

6. Identification of Components Repaired or Replaced:

Name of Component	Name of Manufacturer	Manufacturer Serial No.	National Board No.	Other Identification	Year Built	Repaired, Replaced, or Replacement	ASME Code Stamped Yes/No
Relief Valve	Crosby	28787	N/A	S1-VCC-RV-289		---	No
Disc	Crosby	81459-35-0003	N/A	RSO 8358-84	N/A	Replacement	No

7. Work Description:

The relief valve failed its bench test. The valve disc required replacement. The replacement was verified to be in compliance with the original construction code. A VT-2 examination was conducted in conjunction with a system functional pressure test with no leakage noted.

Reference: NCR 90080260

8. Tests Conducted: System Leakage [ ] System Functional [X] System Inservice [ ] Hydrostatic [ ] Pneumatic [ ] Other [ ]
Pressure: 22 psig Temp: N/A

FORM NIS-2 (back)

9. **Remarks:** None

(Applicable Manufacturer's Data Reports to be attached)

CERTIFICATE OF COMPLIANCE

We certify that the statements made in this report are correct and this replacement (repair or replacement) conforms to the rules of the ASME Code, Section XI.

Signed [signature] (Owner or Owner's Designee) Supvg. ASME Codes Engineer (Title) 4/3 (Date) 1991

CERTIFICATE OF INSPECTION

I, the undersigned holding a valid commission issued by the National Board of Boiler and Pressure Vessel Inspectors and the State or Province of California, employed by Arkwright Mutual Insurance Company (Factory Mutual System) of Norwood, Massachusetts have inspected the components described in this Owner's Report during the period from 7/17/90 to 5/15/91 and state that to the best of my knowledge and belief, this repair or replacement has been performed in accordance with Section XI of the ASME Code. By signing this certificate, neither the Inspector nor his employer makes any warranty, expressed or implied, concerning the repair or replacement in this Report. Furthermore, neither the Inspector nor his employer shall be liable in any manner for any personal injury or property damage or a loss of any kind arising from or connected with this inspection.

Edward C. Easton Commissions 1574 California

Inspector's Signature (State or Province, National Board)

Date May 15 1991

Note: Supplemental sheets in the form of lists, sketches, or drawings may be used provided (1) size is 8-1/2 in. x 11 in., (2) information in Items 1 through 4 on this data report is included on each sheet, and (3) each sheet is numbered and the number of sheets is recorded at the top of this form.