U.S. NUCLEAR REGULATORY COMMISSION

REGION V

Report Nos. 50-206/93-24, 50-361/93-24, 50-362/93-24

Docket Nos. 50-206, 50-361, 50-362

License Nos. DPR-13, NPF-10, NPF-15

Licensee: Southern California Edison Company
Irvine Operations Center
23 Parker Street
Irvine, California 92718

Facility Name: San Onofre Units 1, 2 and 3

Meeting At: San Onofre, San Clemente, California

Report Prepared By: Christopher M. Regan, Intern

Approved By: H. J. Wong, Chief — 8/13/93 Date Signed
Reactor Projects Section II

Summary

A management meeting was held on July 29, 1993, to discuss the following issues:

- San Onofre new organizational structure,
- Status of Unit 1,
- Units 2 steam generator tube inspection results,
- Unit 3 steam generator leakage monitoring and evaluation,
- Control of equipment near safety-related components, and
- Removal of transformer seismic restraints.

A copy of the slides used during the licensee's presentation is enclosed.

9309290176 930816
PDR ADOCK 05000206
Q PDR

DETAILS

1. Meeting Attendees

Southern California Edison Company

H. Ray, Senior Vice President, Power Systems
R. Krieger, Vice President, Nuclear Generation
R. Rosenblum, Vice President, Engineering and Technical Support
W. Marsh, Manager, Nuclear Regulatory Affairs
G. Gibson, Supervisor, Onsite Nuclear Licensing
L. Cash, Maintenance Manager
B. Katz, Manager, Nuclear Oversight
J. Reilly, Manager, Engineering, Construction and Fuel Services
M. Speer, Manager, Security
G. Moore, Plant Superintendent, Unit 1
J. Rainsberry, Plant Licensing Manager
R. Giroux, Engineer, Onsite Nuclear Licensing
P. Knapp, Manager, Health Physics
R. Waldo, Operations Manager
M. Short, Manager, Site Technical Services
K. Slagle, Manager, Outage Management
R. Joyce, Maintenance Manager, Units 2/3
A. Thiel, Manager, Electrical Systems Engineering
M. Wharton, Manager, Nuclear Design Engineering
J. Clark, Manager, Chemistry
G. Sanders, Onsite Nuclear Licensing
S. Medling, Manager, Unit 1 and Generic Licensing
C. Robinson, Nuclear Security Officer
D. Barron, Corporate Communications Representative

San Diego Gas and Electric Company

R. Lacy, Manager, Nuclear
R. Erickson, Site Representative

Nuclear Regulatory Commission

K. Perkins, Director, Division of Reactor Safety and Projects
E. Adensam, Assistant Director, Regions IV and V, NRR
M. Fields, Project Manager, Units 2 and 3, NRR
L. Miller, Chief, Reactor Safety Branch
H. Wong, Chief, Reactor Projects Section II
C. Caldwell, Senior Resident Inspector
J. Russell, Resident Inspector
D. Solorio, Resident Inspector
C. Regan, Intern, NRR

Others

A. Horan, Reporter, Orange County Register
M. Larabee, Reporter, Blade Citizen

2. Details

The meeting was convened at 9:00 a.m.

Mr. Ray provided brief statements concerning the topics to be discussed during the meeting and Mr. Perkins introduced the NRC staff at the meeting. Mr. Perkins stated that this was one of several meetings this year with San Onofre management and that the purpose of the last meeting (held on July 1, 1993) was to discuss the planned Unit 2 steam generator inspection program. Mr. Perkins stated that the NRC has continued to closely monitor the SONGS steam generator issues since the last meeting. In addition, Mr. Perkins stated that he considered the commercial-grade test facility located at the San Onofre site to be state-of-the-art and his tour of the test facility to be time well spent.

a. New Organizational Structure

Mr. Ray initiated SCE's presentation by describing the need for organizational changes as San Onofre transitioned from a three-unit to a two-unit site. Mr. Ray stated that he will be devoting 20% of his time to the nuclear area, but that Mr. Krieger and Mr. Rosenblum would devote 100% of their time to nuclear power generation. SCE had also established a new position devoted entirely to business management, filled by Mr. Wambold, who reports to Mr. Ray.

Mr. Perkins questioned how information flow from the Nuclear Oversight Division to senior management would be affected. Mr. Ray responded by stating that the groups and information flow paths would remain basically intact, but that the responsible individuals have changed. Mr. Rosenblum added that the senior management team would continue to collectively make decisions based on Nuclear Oversight information. Mr. Rosenblum stated that problems with a two-headed organization that had occurred in the past had been solved through teamwork and concentrating on an optimization of the whole organization. Mr. Wong questioned if the Unit 1 organization would remain integrated into the organizational structure in light of the different conditions and problems that the permanently shutdown Unit would be facing. Mr. Krieger responded that Unit 1 would remain within the current organizational structure, and that the extent of management effort that was required by Unit 1 would be continually evaluated. Mr. Ray agreed with NRC comments that the organizational changes were principally related to departmental alignment shifts and that departments maintained their previous work responsibilities.

b. Unit 1 Status

Mr. Marsh provided an overview of the milestones and current changes that had occurred regarding the status of Unit 1 shutdown since the meeting held in October 1992. Mr. Marsh stated that the results of recent spent fuel pool heat-up tests demonstrated design heat load calculations were more conservative than the actual heat-up rate

measured. As of August 1993, based on the measured pool heat-up rate, the pool temperature is not expected to exceed 140° Fahrenheit, with no forced cooling and the building doors open. Mr. Marsh also discussed the Unit 1 proposed decommissioning plan and indicated that a proposed decommissioning plan would be submitted to the NRC around November 1993. Mr. Marsh indicated that Unit 1 would be maintained in a SAFSTOR condition and that all three SONGS units would be decommissioned at one time. Mr. Perkins asked if recent information on decommissioning and component disposal at low-level waste disposal sites, in particular a report published concerning the Humboldt Bay facility, had been taken into consideration for disposal of Unit 1 components. Mr. Marsh stated that Barnwell, South Carolina, was the only site still accepting low-level waste, and if SCE was to decommission all 3 Units simultaneously at the end of their service life, as planned, the Barnwell low-level compact would be unable to cope with the quantity of material at San Onofre. Mr. Rosenblum added that presently the cost was prohibiting shipment of Unit 1 components for disposal at Barnwell, thus eliminating early decommissioning as a viable option. He continued by stating that the ultimate end was to return the site to pre-construction conditions. Mr. Rosenblum stated that SCE personnel attend the quarterly meetings with other utilities who have units undergoing decommissioning.

Mr. Marsh continued the discussion by noting that Unit 1 was very close to completing SAFSTOR preparations and that the spent fuel pool was designed such that criticality could not be achieved even if the pool were filled with pure water (no boron). Mr. Marsh commented that the pool currently remained at shutdown boron concentration. Mr. Perkins asked if sources of water were ready in the event that emergency makeup water was needed for the spent fuel pool. Mr. Waldo stated that connections were available from the auxiliary feedwater system, but that it was highly unlikely that they would be used based on the extended time available to restore water to the pool.

Concerning an NRC inspector's recent inadvertent contamination in Unit 1, Mr. Waldo stated that although surveys conducted immediately after the contamination had showed some contamination as a result of tank draining operations, 1500 entries had been made into the same area with no contamination events since that time. He continued by stating that he walks down Unit 1 weekly, and has seen no instances of a different standard between the three units.

Mr. Perkins asked whether or not SCE had sold any of the Unit 1 equipment. Mr. Marsh stated that the shutdown diesel had been sold, but that there had been no interested buyers for the remaining plant equipment.

Mr. Perkins stated that vigilance must be maintained when employees make their rounds, and that in all areas a more critical eye was needed. However, he was pleased that management had reinforced

monitoring of Unit 1.

c. Steam Generator Issues

Mr. Waldo presented information on the monitoring of the steam generators in Unit 3 and the methodology used for determining leakage. Mr. Waldo stated that there were minor leaks in both Unit 3 steam generators. This had been determined through air ejector sampling and a new steam line detection technique utilizing Nitrogen-16. Mr. Waldo stressed that operator crews had specific guidance on shutdown actions to be taken if the leak rate increases 60 gallons per day within a 1-hour period.

Mr. Waldo stated it was SCE's evaluation that each steam generator in Unit 3 had a leaking plug. Nitrogen-16 testing of Steam Generator E-089 did not show a tube plug leak; however, other testing methods had shown evidence of a leaking tube plug. Additionally, Mr. Waldo stated that air ejector sampling was a reliable method that was being used to quickly determine total steam generator leakage. Mr. Waldo discussed the current leakage rate from the steam generators and stated that an overall leakage rate was determined by the air ejector activity and then the activity levels in gas samples from each steam generator were used to calculate the leakage attributable to each steam generator. Air ejector activity was also being used to determine the ratio between secondary activity and RCS activity. Any change to this ratio would initiate additional sampling. He added that the ratio of leakage between the steam generators was determined two to three times a week.

Mr. Perkins asked if SCE has spoken with industry counterparts on the use of these detection techniques. Mr. Waldo responded by saying that in comparison to other techniques air ejector sampling used a lower sample rate, which allowed for greater sensitivity.

Mr. Short continued the presentation by describing the Unit 2 steam generator tube inspection program and the results of that program. Mr. Short indicated that there were two unexpected results: (1) seven axial cracks found just above the top of the tube sheet, in the sludge pile region and at the eggcrate supports, and (2) 13 circumferential cracks identified at the top of the tube sheet. There were no free span axial cracks in the upper regions of the steam generators as found at Palo Verde. The tubes which were found to have cracks were plugged. He continued by saying that all signs of wear and corrosion had occurred on the hot leg side of the steam generators with no degradation having been found on the cold leg side.

In response to an NRC question, Mr. Short stated that the sludge pile in the steam generators varied in depth from almost nothing in some areas at the perimeter of the steam generator to a maximum depth of 5-6" at the center of the hot leg region. He added that

there were some indications that the corrosion of the tubes was related to the presence of the sludge pile. However, at that time it was indeterminate as to whether the corrosion was occurring on the inside or the outside of the tubes. Mr. Short indicated that the investigation was ongoing.

Mr. Short added that the design limit of the steam generators was 10% of the tubes removed from service over the life of the plant. Mr. Perkins asked if sleeving previously plugged tubes would be feasible. Mr. Short responded that sleeving was an option.

Mr. Perkins commented that no one was exempt from steam generator corrosion problems and that inspection and mitigation efforts were key areas to focus attention. He considered that a good approach was to understand the failure mechanisms, examine the data closely, and thus determine a baseline that could be used to develop a better inspection program. He was pleased at the effort that SCE was placing in this area. Mr. Rosenblum agreed with the desirability of knowing as much as possible before beginning the examination of Unit 3 steam generator tubes. Mr. Perkins added that SCE should consider the possible need for tube pulling in Unit 3 in the upcoming outage. Mr. Short acknowledged the comment.

Concerning the present Unit 3 leak rate, Mr. Short stated that data was consistent with a leaking Westinghouse plug-in-plug design. Mr. Waldo indicated that even though the present leakage rate was well below the Technical Specifications limit of 720 gallons per day, operators would initiate an immediate shutdown at a 60 gallons per day increase in any 1-hour interval. Mr. Short stated that a five gallon per day deviation from 15 gallons per day would indicate that something other than a plug-in-plug leak was occurring and also added that increases in the leak rate might also be indicative of an additional leaking plug.

d. Transformer Seismic Restraints

Mr. Reilly outlined the facts of the event which involved safety-related transformers installed and energized without the vendor-installed seismic restraints. Mr. Reilly gave a brief history of the transformer replacements being performed at Unit 2. SCE was conducting a detailed investigation into the reasons the construction contractor had removed the restraints.

Mr. Fields asked whether SCE personnel had inspected the transformers during the installation process. Mr. Reilly responded that the contractor was fully certified and had their own QA/QC program, which was approved by SCE. However, the reasons the contractor's QA/QC program failed to recognize the deficiency were still under investigation, and would be part of the final report due in August 1993. Mr. Katz added that the design change package work was done by Bechtel, with SCE monitoring the contractor's QA program.

Mr. Perkins questioned if SCE had actively overseen the installation of the transformers. Mr. Katz responded that the only inspection performed by SCE personnel to ensure seismic integrity, was to ensure the transformers were bolted down. Mr. Ray stated that nonsafety-related transformers of a similar design did not have the seismic restraints. The workers thought the seismic restraints were shipping supports. In addition, Mr. Marsh stated that of the shipment of five transformers, three were nonsafety-related. Thus, installation of all the transformers was conducted in a similar manner without the seismic restraints in place. Mr. Reilly stated that the original design of the transformer did not have the restraints and the need for the restraints during a seismic event was still under evaluation. The seismic restraints had been added by the manufacturer for extra conservatism. Mr. Reilly stated that it was two days later, while walkdowns for the Individual Plant Examination for External Events program were being conducted, that the discrepancy was discovered. At this point, a Technical Specification 72-hour action statement was entered, which resulted in the suspension of core alterations. Mr. Reilly stated that Unit 3 transformers would be installed during the next refueling outage.

e. Restraint of Temporary-use Items

Mr. Cash presented a brief history of the unrestrained items that had been discovered and that could have damaged safety-related components in a seismic event. Mr. Cash also provided a short description of the corrective actions performed to eliminate these occurrences. Initial indications attributed most of the occurrences to contractor work groups; therefore, most attention was focused in these areas. Further examination showed that this problem was occurring in other groups as well and the scope of the corrective actions was increased to include all SCE personnel. Mr. Wong questioned whether the site procedure was being covered sufficiently during personnel training. Mr. Cash responded that the procedure for the seismic restraint of temporary-use items was originally a maintenance procedure and had been adapted for site use as a housekeeping procedure. Therefore, it may not be as easy for a chemistry technician, for example, to adhere to the procedure as a maintenance worker and noted that training could be improved. Mr. Cash concluded that this issue was not indicative of procedural adherence problems in other areas.

f. Closing Remarks

Ms. Adensam stated that the facility appeared well-maintained, and was pleased to note a lack of leaks and standing water during a tour of the site. Mr. Perkins added that during his time in Region V he had seen improving performance. He stressed a need to maintain a watchful eye on some areas, especially Unit 1, and to continue to pay attention to detail during walkdowns. In addition, Mr. Perkins stated that he had seen an improvement in the area of maintenance,

but stressed that continued scrutiny of procedural adherence was needed. Mr. Fields added that the quality of Technical Specification amendments submitted during the last six months had improved. He felt they were well organized, with strong technical arguments.

The meeting adjourned at 11:15 A.M.

San Onofre Unit 1 Update

Southern California Edison

CURRENT NUCLEAR ORGANIZATION

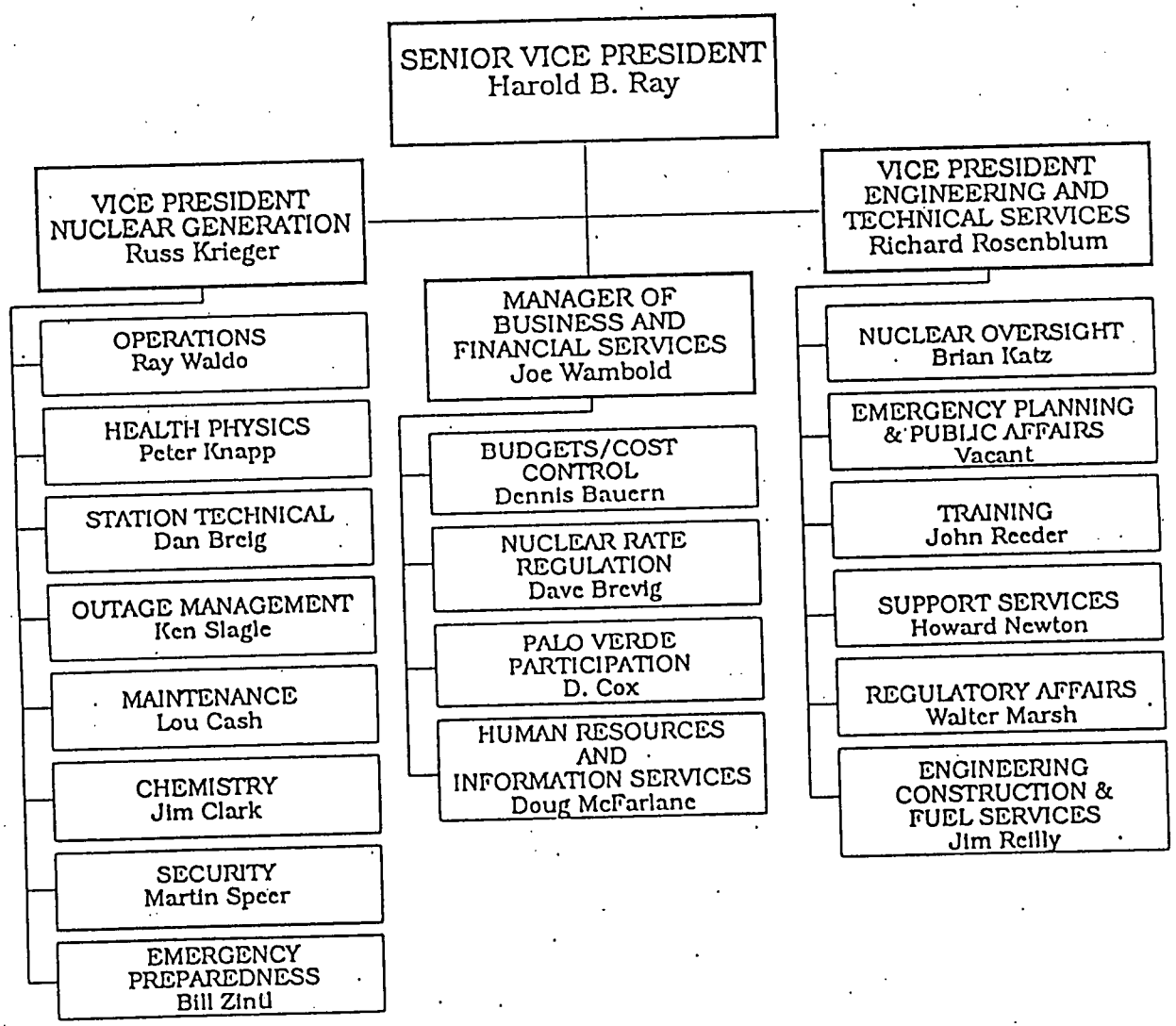

PREVIOUS CORPORATE ORGANIZATION

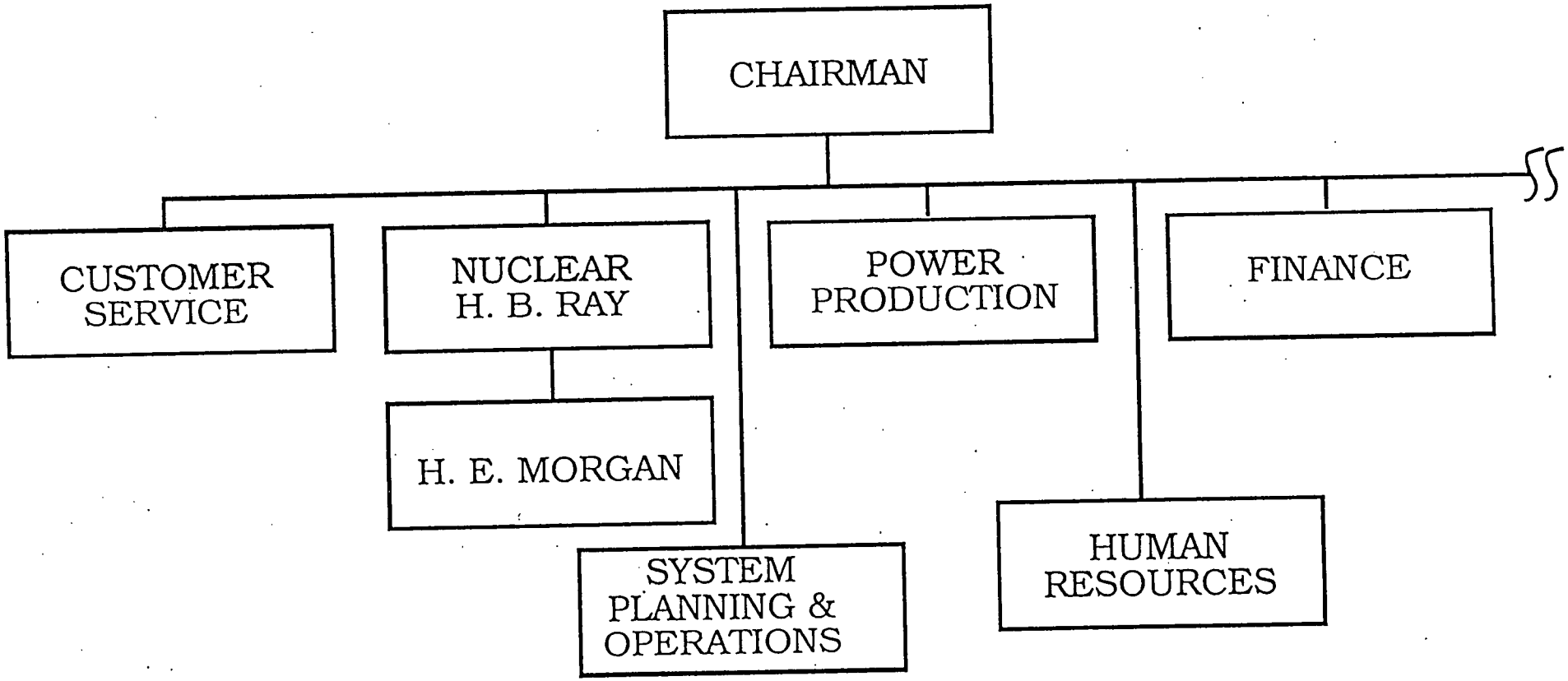

CURRENT CORPORATE ORGANIZATION

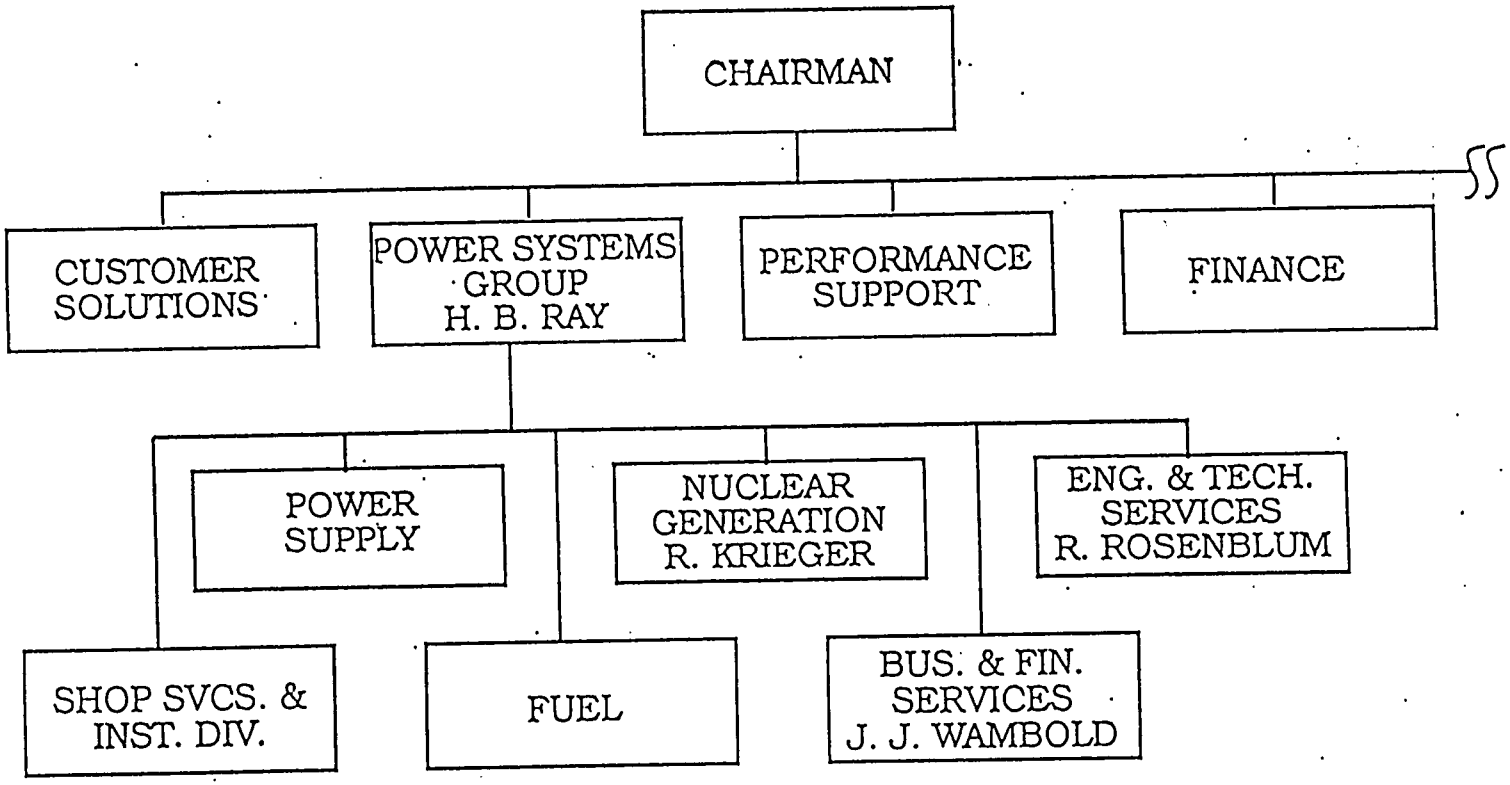

PREVIOUS NUCLEAR ORGANIZATION

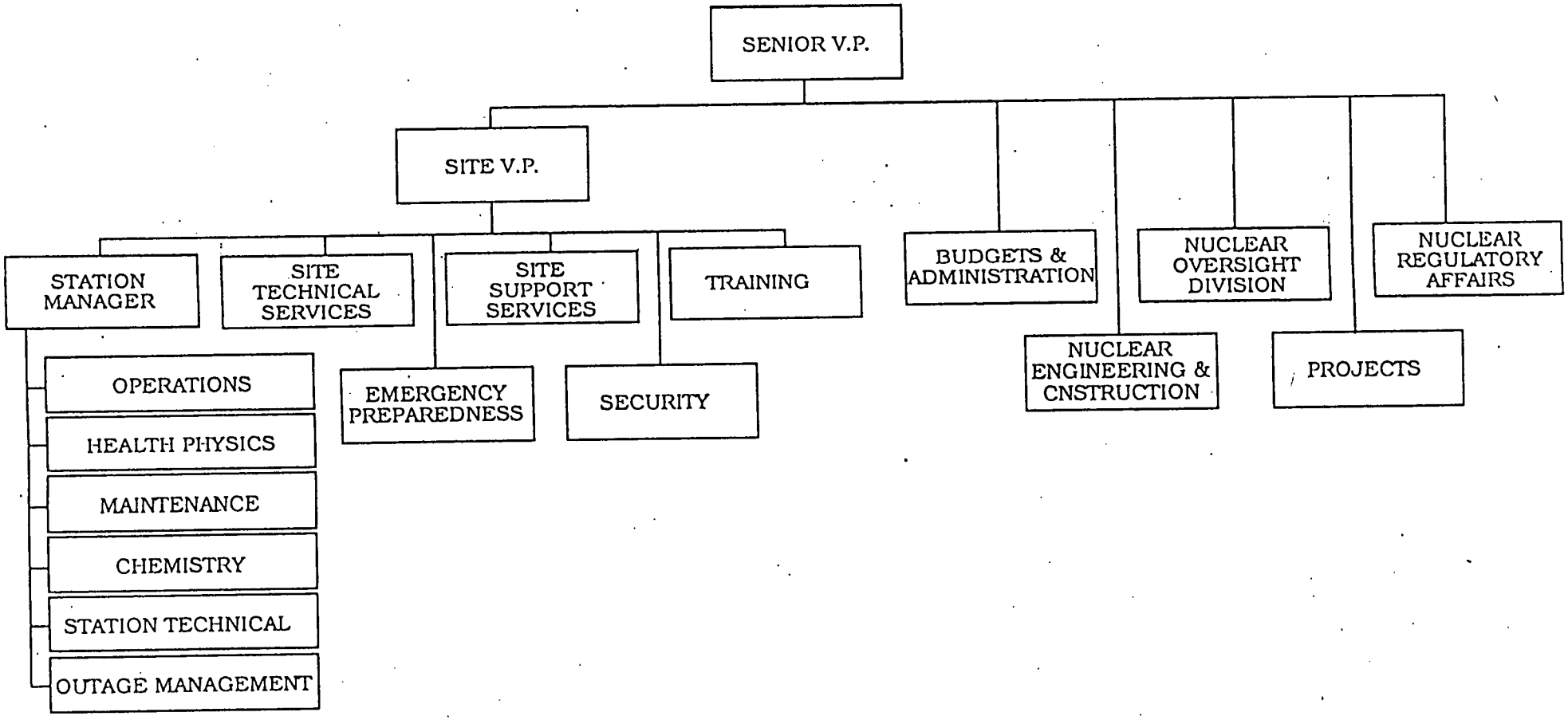

San Onofre Reorganization

Nuclear Organization is in transition from a 3 Unit to a 2 Unit site

Organization is a reflection of the transition

RECEIVED
NRC
REGION V
'93 AUG 2 A10:10

San Onofre Reorganization

Southern California Edison

Introduction

Update since December 1992 SCE-NRC Management Meeting

Final Shutdown Configuration

Decommissioning Plan

Maintaining the material condition of the plant

Unit 1 Major Milestones

Background

Opened breakers	11/30/92
Transhipment	1/22/93 - 2/13/93
Core offloaded	3/6/93

Unit 1 Major Milestones

Containment closed and locked	5/14/93
SFP heatup test	5/20/93
SFP thermal equilibrium of 180° F * (conservative)	8/29/93
SFP thermal equilibrium of 140° F * (probable)	8/29/93

Spent Fuel Pool Water Temperature During Loss of Forced Cooling

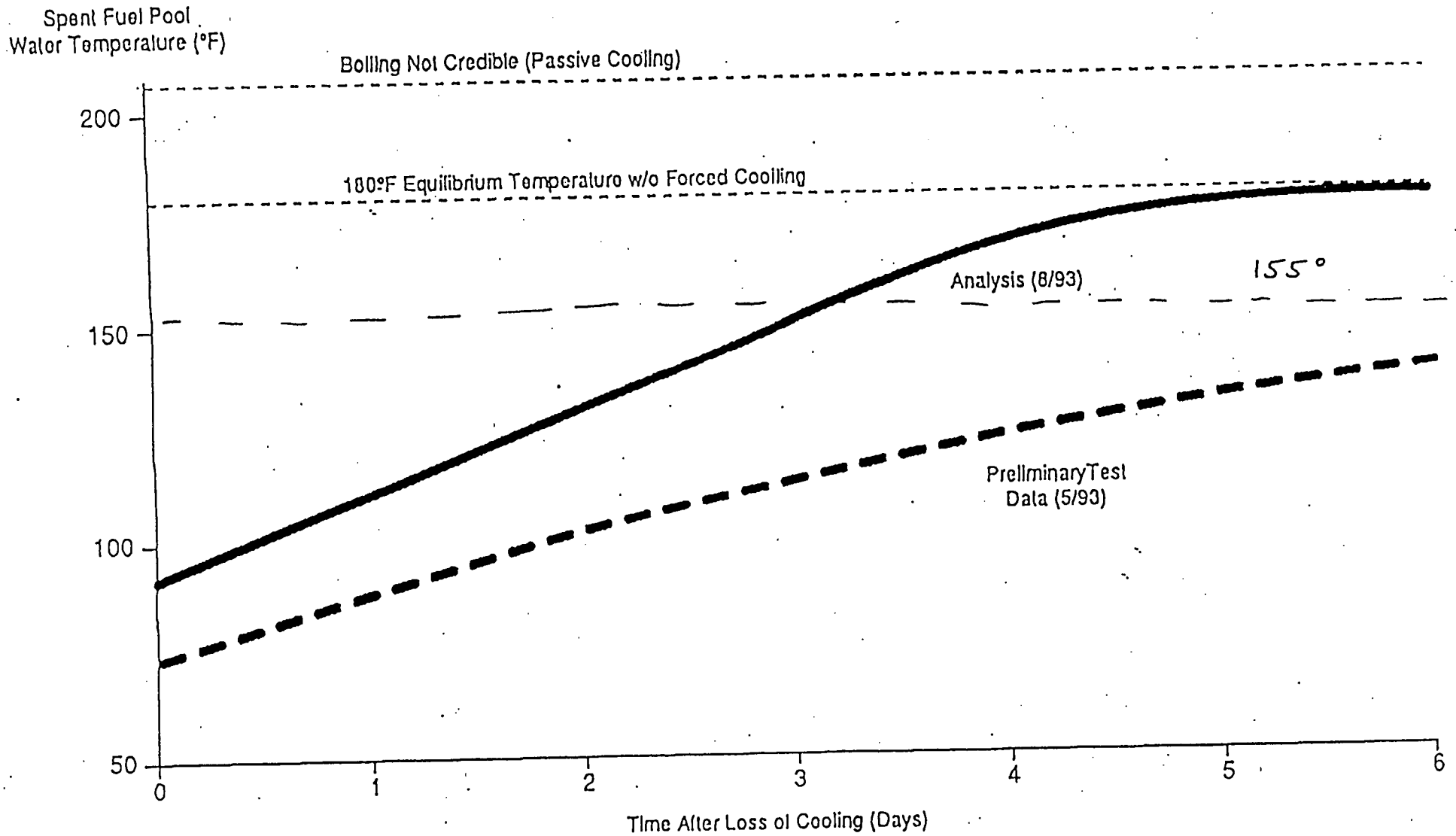

Spent Fuel Pool Water Level During Loss of Forced Cooling
(no water addition)

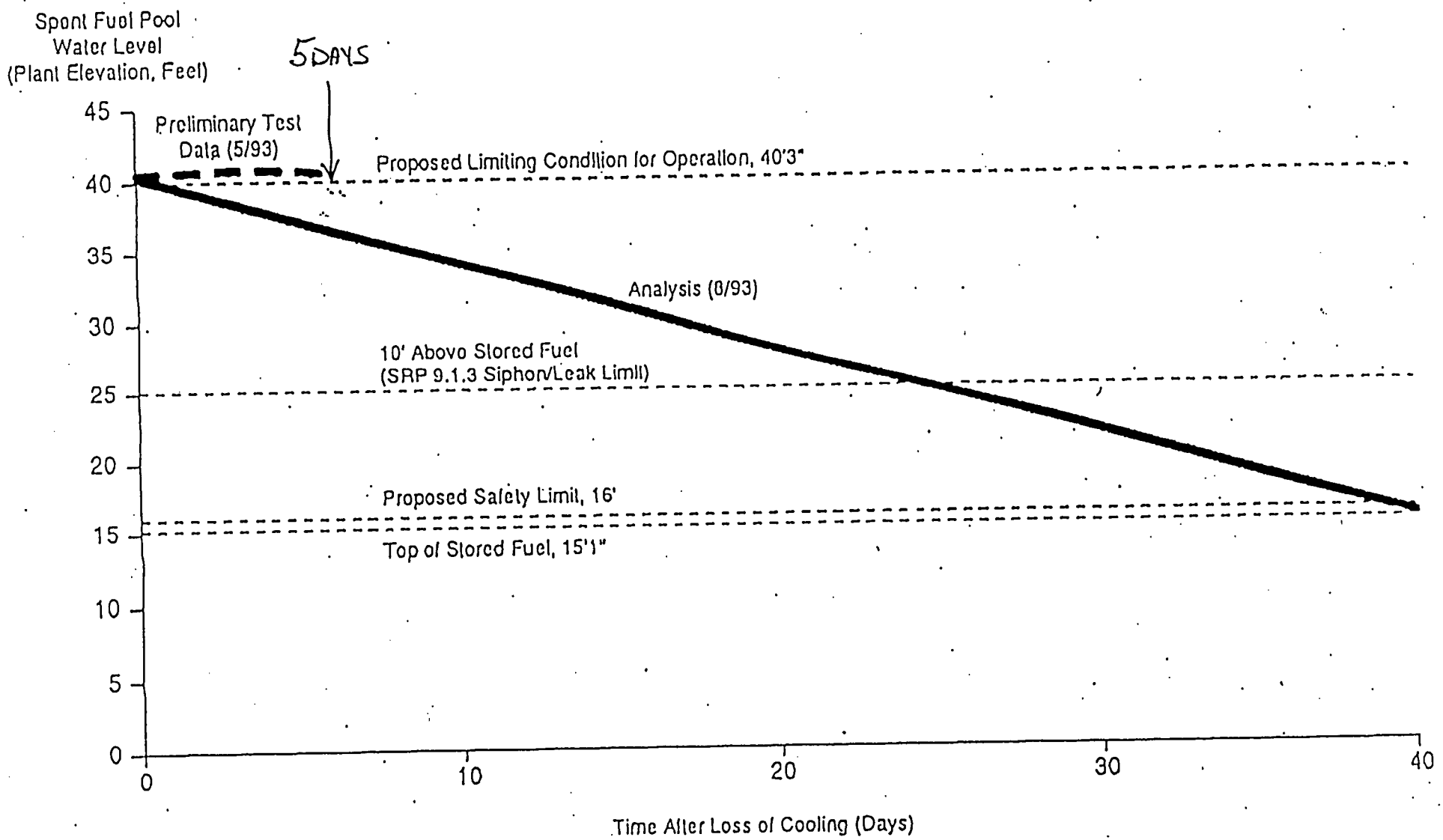

Unit 1 Key Licensing Actions

Background

Preliminary Decommissioning Plan	12/1/92
POL Certification submitted	3/9/93
Emergency Plan changed	4/12/93

Unit 1 Key Licensing Actions

PDTS submitted	5/12/93
Security Plan revision submitted [50.54(p)(2)]	7/23/93
Proposed Decommissioning Plan & termination application	11/30/93

UNIT-1 FINAL SHUTDOWN AND SAFSTOR MILESTONE SCHEDULE

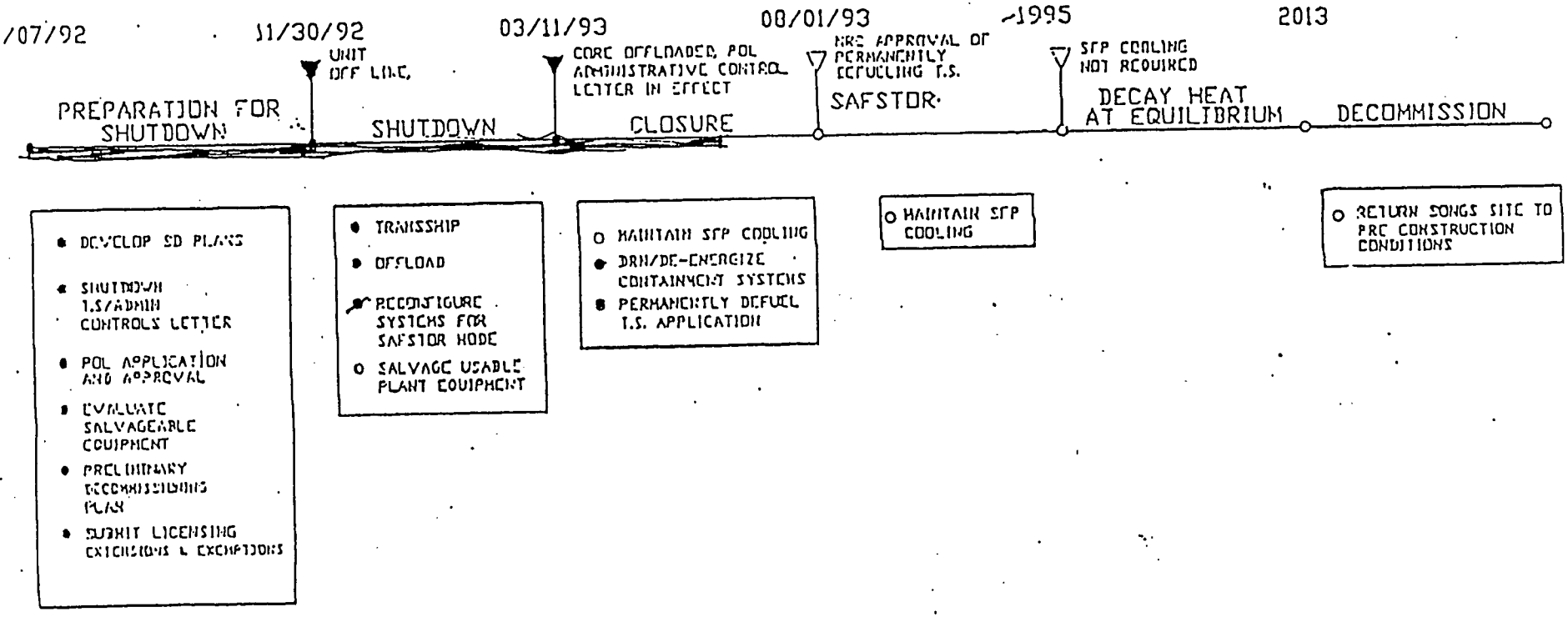

Unit 1 Final Shutdown Configuration

Basis:

- Unit 1 will not operate again

Status:

- Enhanced Technical Specification with Administrative Controls letter (pending PDTS)
- The control room manned 24 hours a day.
- Boron not required in SFP

Unit 1 Final Shutdown Configuration

Little or no salvage

Out of service systems are being isolated, drained, and deactivated (oil drained from components to reduce fire hazard) - except generator

Minimal lay-up or preservation efforts will be taken

The control room, office buildings, and shops will be maintained habitable

UNIT 1 FINAL SHUTDOWN CONFIGURATION

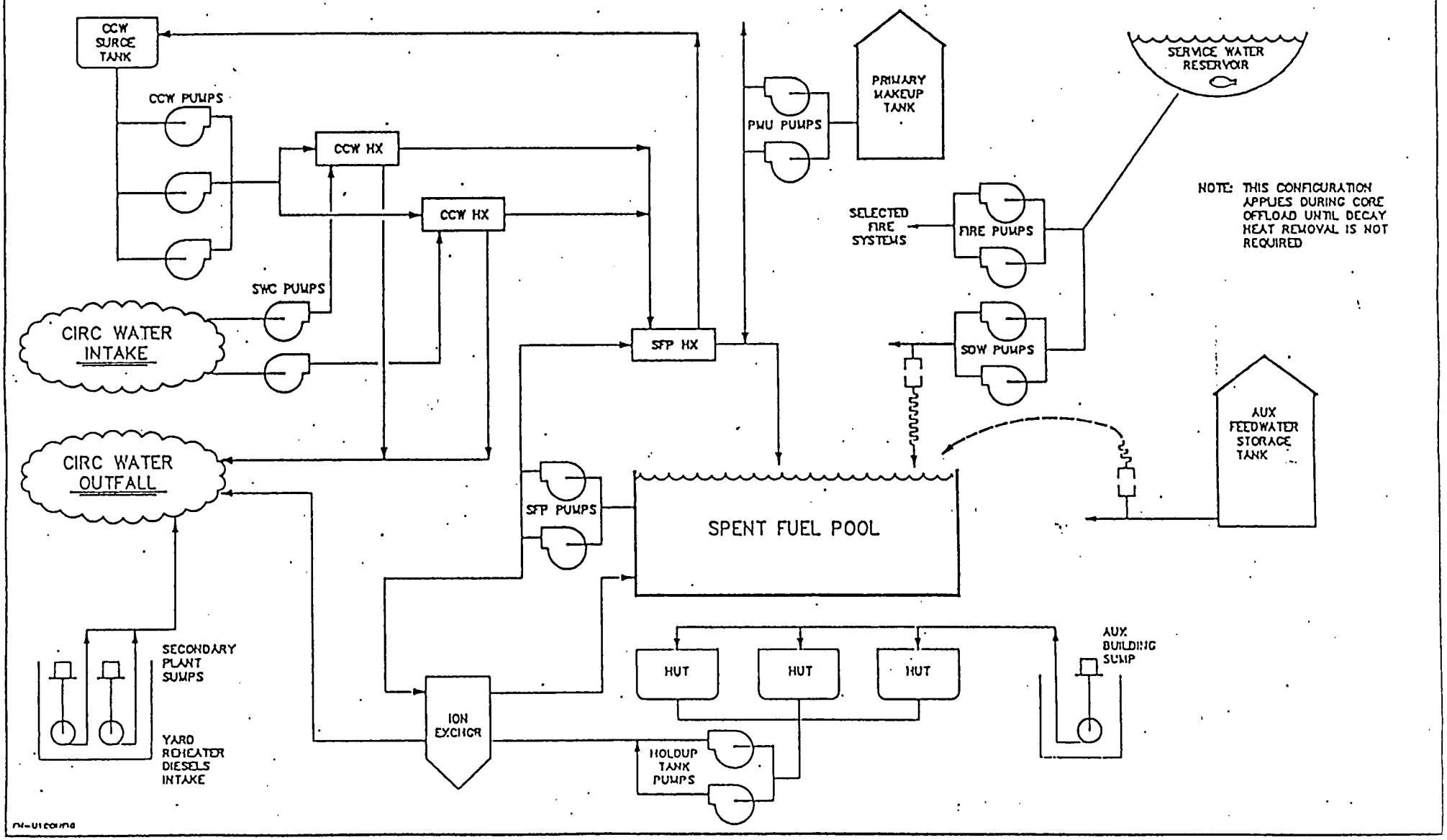

Unit 1 Containment Systems: Drained and De-energized

Maintain cathodic protection on sphere

Containment locked, slight negative pressure maintained, and vented to stack

Fire protection available through CRS

Pressurizer safety valve removed

Containment lighting/purging available for entries

Unit 1 Decommissioning Plan

Project team organized in December 1992:

Management; OPS; Engineering; HP; Security; Licensing; Corporate HP & Environmental

Proposed decommissioning alternative

SAFSTOR with delayed dismantling

Dismanteling activities are planned to begin in 2013, in conjunction with decommissioning Units 2 and 3

Unit 1 Decommissioning Plan

Current Major Activities

- Decommissioning Plan outline (complete)
- Decommissioning estimate (complete)
- Site Characterization plan
- Plant change configuration control procedure

Unit 1 - Maintaining the Material Condition of the Plant

Housekeeping/Radiological Protection standards: Unchanged and identical to Units 2/3

Plant condition: Unit 1's general standards

Contaminations: One contamination in last 1500 entries at Unit 1 (above 100 cpm). SCE believes contamination was unrelated to Spent Fuel Pool valve leakage.

Conclusion: Conditions at Unit 1 are being properly maintained

Steam Generator Update

San Onofre Units 2 and 3

Southern California Edison

Introduction

Update of July 1, 1993 presentation

Results of Unit 2 inspection

Unit 3 operational leakage

Unit 3 inspection planning

Leakage monitoring - Ray Waldo

Unit 2 feedring erosion - Jim Reilly

Unit 2 Inspection Goals

Meet Technical Specification requirements

Follow EPRI guidance

Obtain information on overall condition

Monitor for industry concerns

Collect information for future use (deposits)

Develop baseline information for future use

Unit 2 Inspection Program

Inspection	Plan	Actual	Comments
Bobbin - full length	2000	5950	All since Cy 5
MRPC - TTS	500	9000	100%
MRPC - upper regions	420	420	No indications
Profilometry	100	100	All in area of interest

Totals are approximate per steam generator

Unit 2 Inspection Results

SG	88	89	Comments
Reason Plugged			
Vertical Strap Wear	3	2	Expected
Batwing Wear	3	2	Expected
Eggcrate Wear	0	1	Industry Exp
Axial	1	6	.25 - .75" long
Circumferential	3	10	30% of circum
Tie-rod denting	1	0	Expected
Total	11	21	Expected

Unit 2 Inspection Results

Steam Generator	88	89
Total Tubes	9350	9350
Previously Plugged	266	348
Plugged Cy 7	11	21
Tubes in-service	9073	8981
% of total	97%	96%

TUBE PLUGGING REASONS - JULY 1993

PLANT: SAN ONOFRE UNIT 2

GENERATOR: 88

X = CIRCUMFERENTIAL INDICATIONS (3)
X = TIE ROD DENTING (1)

X = AXIAL INDICATIONS (1)

X = WEAR AT SUPPORT STRUCTURES (6)

TOTAL TUBES : 9350
SUPPORT RODS ( ) : 7

TOTAL TUBES ASSIGNED : 11
OUT OF SERVICE (●) : 266

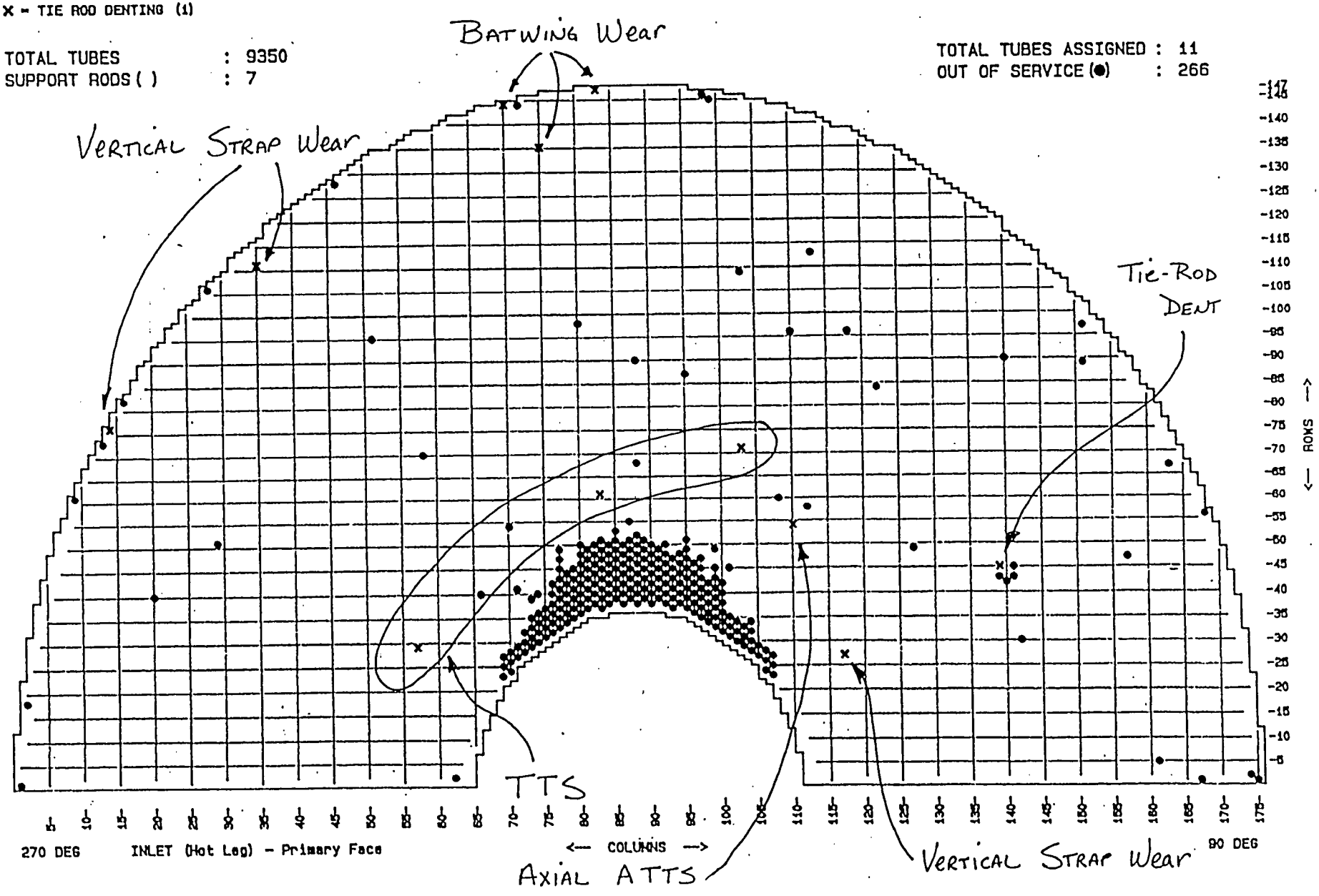

** SCE TUBAN (TM) VER. 4.0 Tuesday July 27, 1993 4:01 PM **

TUBE PLUGGING REASONS - JULY 1993

PLANT: SAN ONOFRE UNIT 2

GENERATOR: 89

X = CIRCUMFERENTIAL INDICATIONS (10)

X = AXIAL INDICATIONS (6)

X = WEAR AT SUPPORT STRUCTURES (5)

TOTAL TUBES : 9350
SUPPORT RODS ( ) : 7

TOTAL TUBES ASSIGNED : 21
OUT OF SERVICE (●) : 348

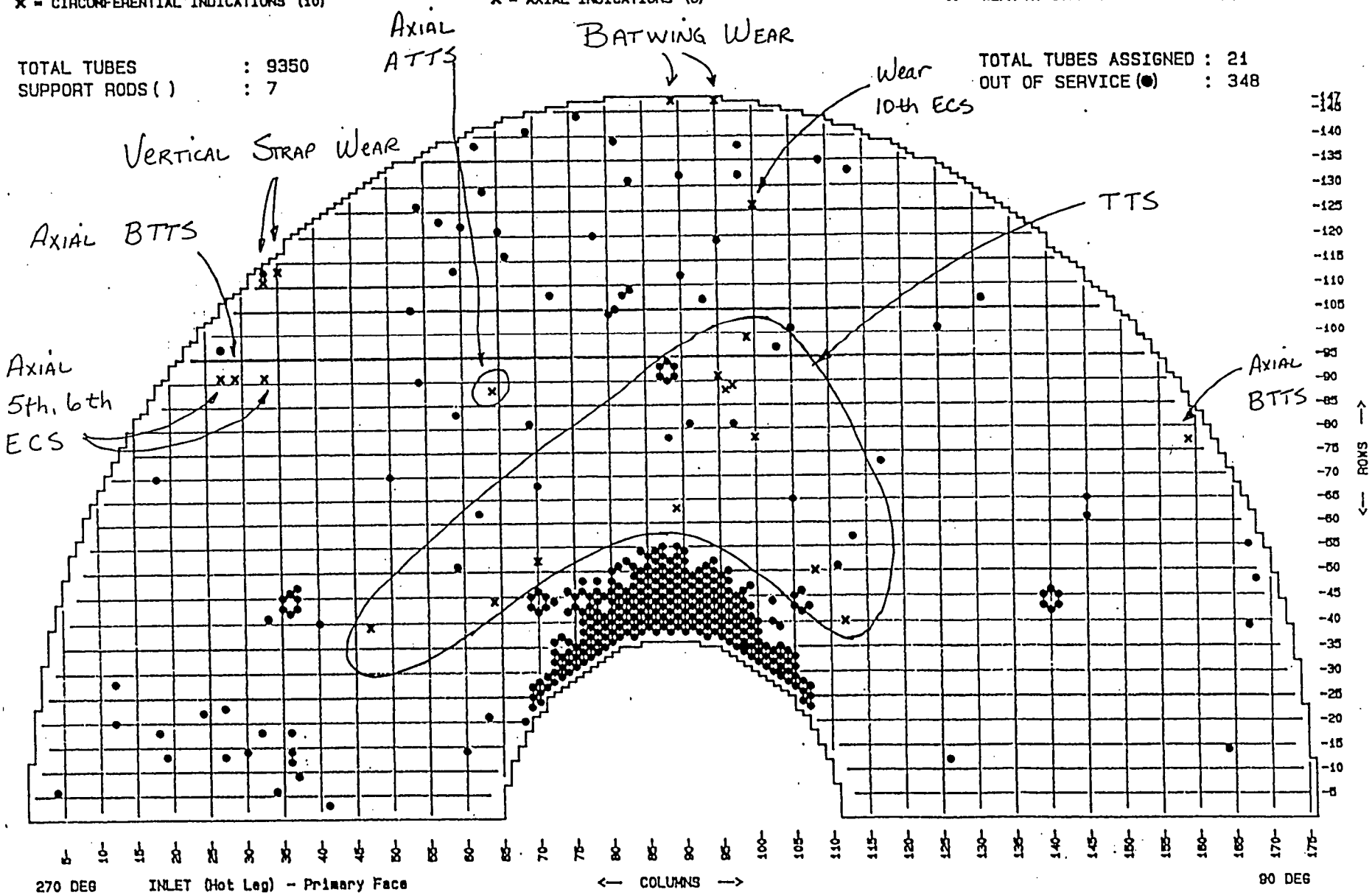

SCE TUBWN (TX) VER. 4.0 Tuesday July 27, 1993 4:10 PM

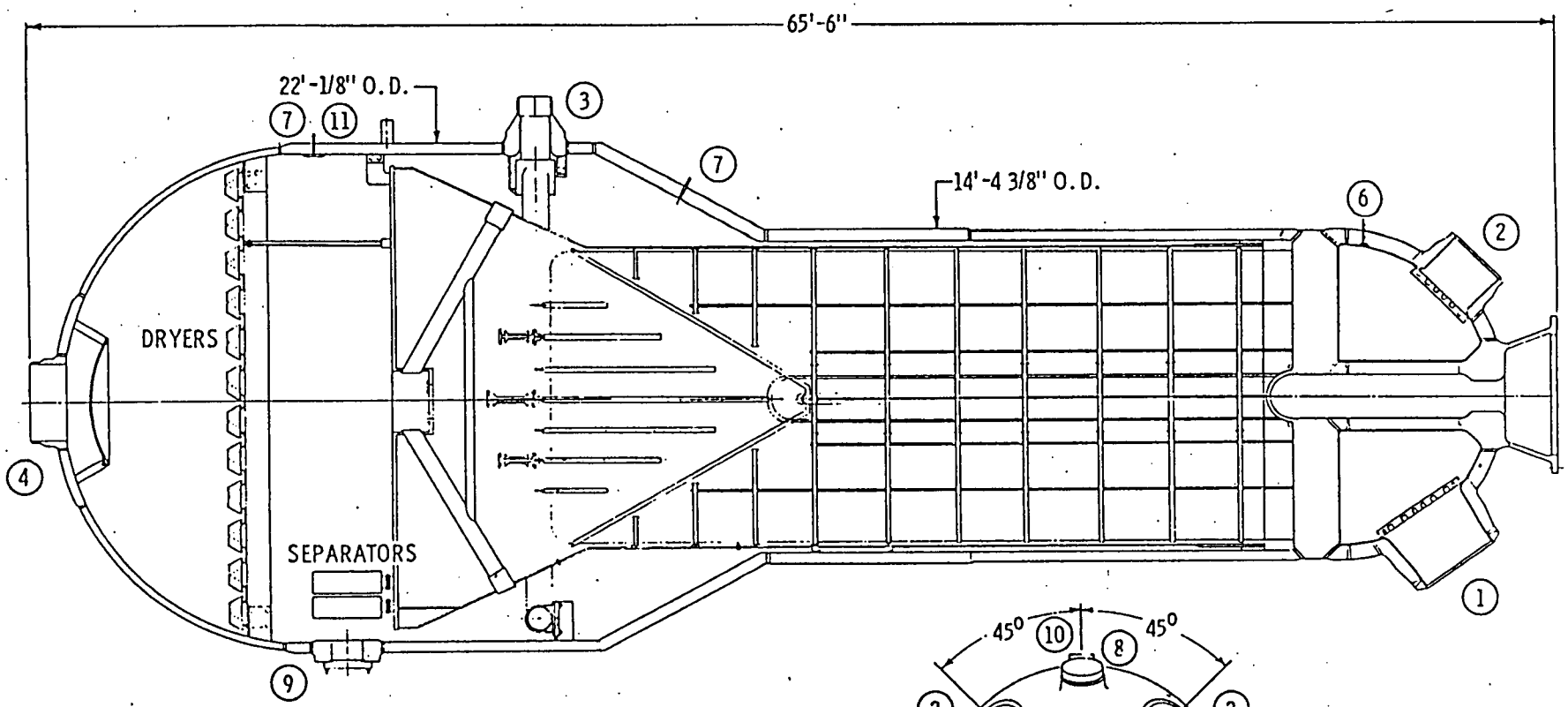

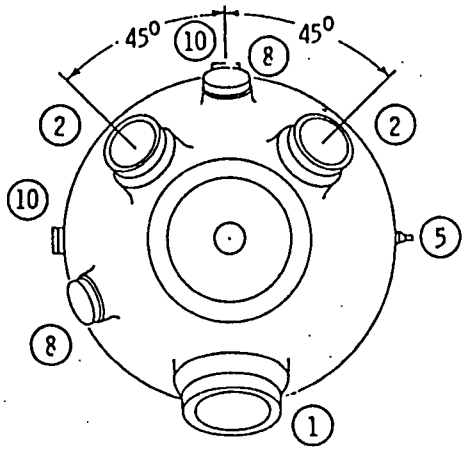

No.	Service	No. Req'd
1	Primary Inlet	1
2	Primary Outlet	2
3	Feedwater	1
4	Steam Outlet	1
5	Blowdown	1
6	Pressure Tap	4
7	Liquid Level	8
8	Primary Manway	2
9	Secondary Manway	2
10	Handhole	2
11	Sample	1

Updated

SAN ONOFRE
NUCLEAR GENERATING STATION
Units 2 & 3

STEAM GENERATOR

Figure 5.4-6

Unit 3 Steam Generator Update

Operational leakage assessment

Inspection planning for Cycle 7 outage

Leakage monitoring - Ray Waldo

Primary to Secondary Leak Rate

June - August 1993

Unit 3

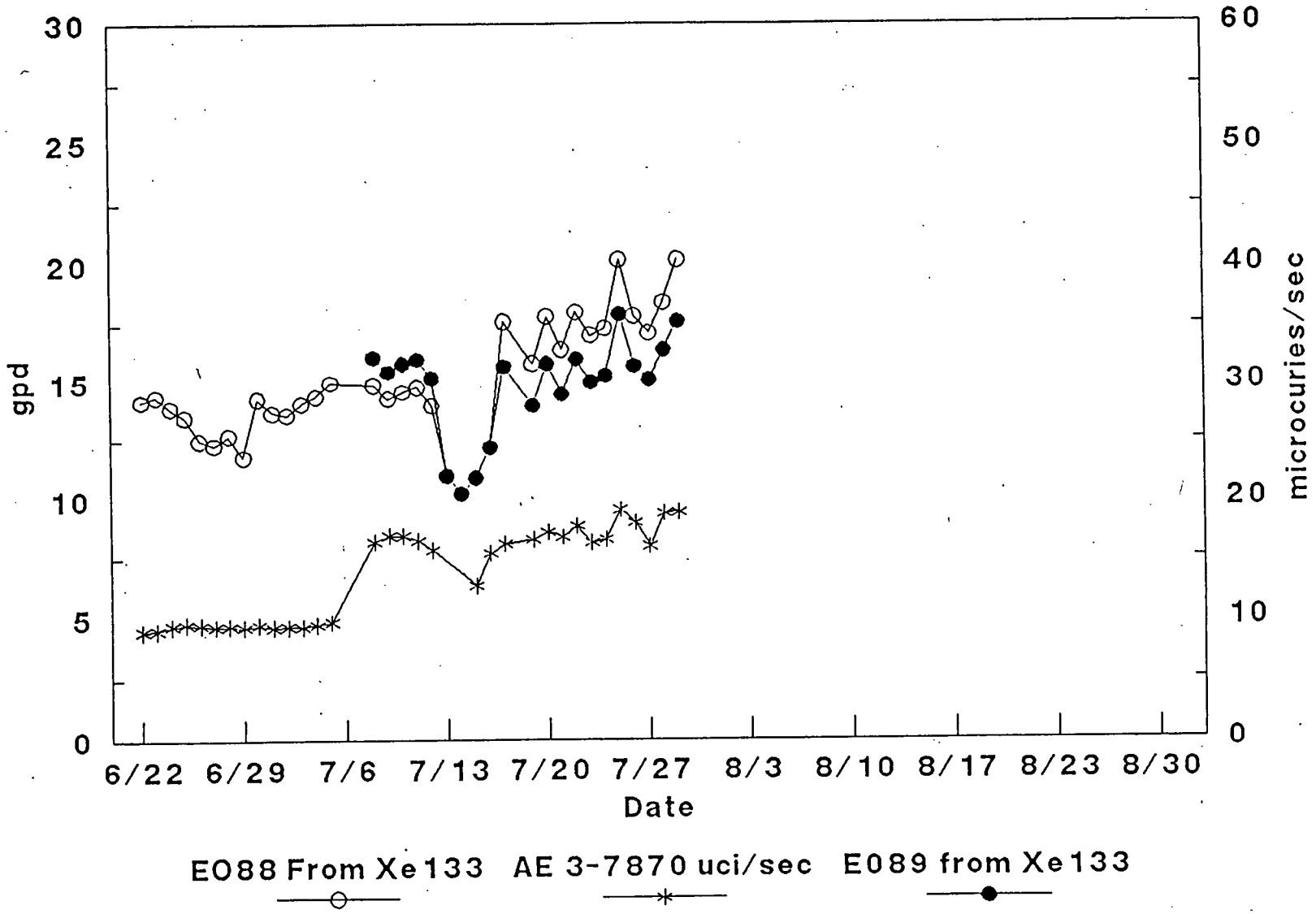

STEAM GENERATOR TUBE LEAKAGE MONITORING

LOCATION	TYPE	FREQUENCY	LLD (At Current RCS Activity)
Air Ejector	Monitor	Continuous	< 1 gpd
Air Ejector	Alarm	Continuous	30 gpd
Air Ejector	Grab	Weekly	~ 0.1 gpd
Blowdown	Monitor	Continuous	~ 5 gpd
Blowdown	Alarm	Continuous	~ 1000 gpd
Blowdown	Grab	Every 72 Hours	< 1 gpd
Steamline	N-16	As needed (new)	~ 1 gpd
Steamline	Monitor	Continuous	~ 3000 gpd
Feedwater	Tritium	As needed	~ 0.3 gpd

Transformer Seismic Restraints

Southern California Edison

History

April 24, 1992, Unit 2 tripped due to failure of 480V AC Loadcenter Transformer 2B13

Root cause determined transformer failed as a result of insulation breakdown. Insulation determined to have insufficient service life.

Corrective Action

Phased replacement of 15 loadcenter Transformers on Units 2 and 3.

Replacement priority based upon safety grade and impact to continued plant operation.

Event Facts

MMP issued with drawing showing seismic supports.

Transformer shipped to SONGS with seismic supports installed.

Source inspection performed - correctly installed.

Supports removed by Construction Contractor prior to installation and not re-installed.

Transformers installed and put into service.

Event Facts

Engineering identifies missing supports during IPEEE walkdown.

Plant conservatively enters T.S. action to suspend core alterations.

Support configuration restored.

Safety Significance

Preliminary

Anchorage to Load Frame most critical concern: Demonstrated by ABB's destructive tests; Confirmed by SQUG data base

ABB added struts to stiffen assembly and provide alternate load path to base in order to increase seismic design margin

Formal calculation in progress to confirm

Current Status

DIR in progress

To be Issued For Review 8/18

Final Report To Be Issued 8/30

Construction Contractor conducting a review by Senior Management of Q.C. and Construction performance.

SCE Senior Management met with Contractor Senior Management to review Contractor's performance.

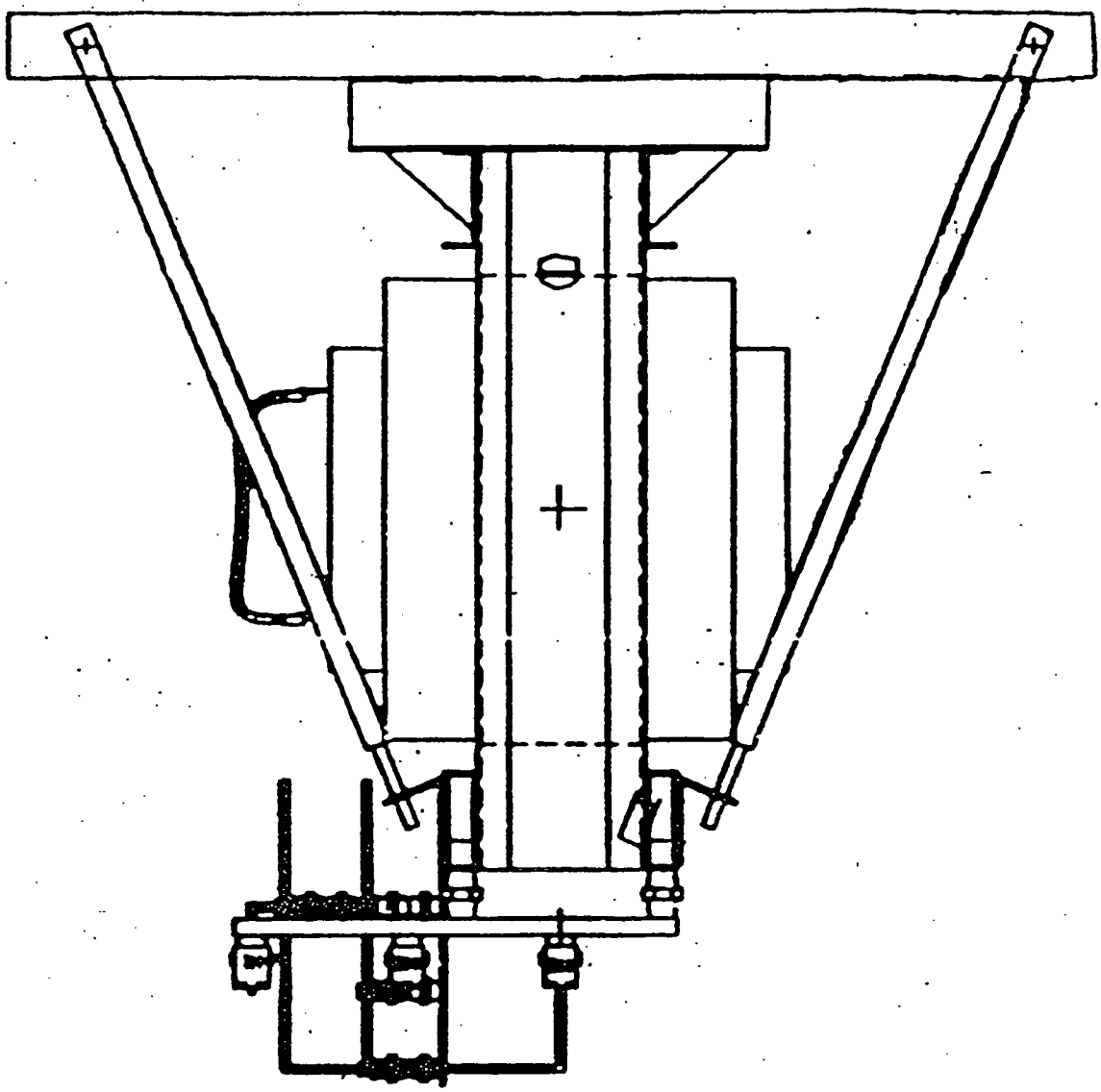

Seismic Restraint of Temporary Use Items

Southern California Edison

History

Initial Indications

- Pre-outage and beginning of outage
- Contractor work

Actions taken/continuing

Briefings on issues and program requirements

- Bechtel Contract work force (Complete)
- SCE Nuclear Construction & Maintenance

Increased field observations by Management and Nuclear Oversight Division

Reviewed training program (Complete)

Reviewed procedure for adequacy

Results

Reduction in instances of non-compliance by Bechtel work force and SCE Maintenance

Character of non-compliances changed and identified in other work groups

Identified weaknesses in training in this area

Identified need for procedure review for Human Factors

Remaining Actions

Brief Contractor and SCE personnel prior to Unit-3 Cycle 7 outage. Determine need for routine pre-outage briefings.

Procedure review and revisions prior to the start of Unit-3 Cycle 7 outage: Human Factors; Technical Adequacy; Industry Comparison

Long term training program will be changed by January 1994: Identify target audience; Improve initial training; Implement continuing training

Conclusions

Minimal safety significance

Not indicative of degraded procedural compliance

Human Factors / Training Issue