WESTINGHOUSE CLASS 3

Attachment to
SCE-90-695
MED-RPV-3056

REVIEW AND ASSESSMENT OF SONGS 1 LOWER REACTOR INTERNALS AND VESSEL INSPECTION (SUMMER 1990)

L. J. BALOG

Approved by: C. H. Boyd
C. H. Boyd, Manager
Reactor Pressure Vessel System Analysis

WESTINGHOUSE ELECTRIC CORPORATION
Nuclear and Advanced Technology Division
P.O. Box 2728
Pittsburgh, Pennsylvania 15230-2728

4774s/110190:10

TABLE OF CONTENTS

REVIEW AND ASSESSMENT OF SONGS I
LOWER REACTOR INTERNALS AND VESSEL INSPECTION
(SUMMER - 1990)

The photographic evidence, (5 video tapes), of the SONGS 1 Lower Reactor Internals and Pressure Vessel inspection was reviewed and evaluated on August 24-28, 1990. These tapes, 2 recorded from the mini-sub, (color film), on 7/30/90, and 3 others in black and white recorded 8/8/90 and 8/9/90 represent good efforts by the operators whereby water clarity, good lighting and sound technique resulted in execellent picture definition and detail.

Of particular interest was the condition of the Internals Thermal Shield and its various attachments and contacts with the Lower Core Barrel; namely the Flexures, Limiter Keys, and Irradiation Specimen Guides near the top of the Shield, and the Support Blocks and Fasteners near the bottom. (See Figures 1 & 2 for the disposition of these components.)

A summary of the visual examination is as follows:

A. <u>Flexures</u> (See Figures 3 & 4)

1. 5 of 6 cracked and fully severed across entire 8.0 inch width.

2. Locations - 21°, 85°, 205°, 244°, and 325°. These same 5 flexures were seen to be broken in 1988 when the Lower Internals were partially inspected.

3. The 124° flexure remains undamaged.

4. All cracks appear to have emanated from the Heat Affected Zone (HAZ) of each flexure blade, (thermal shield side exclusively), and then randomly progressed across the 8 inch width until the blades were completely separated.

5. The "widest" gap in the cracked flexure blades appears to be the 325 flexure, where the gap width is estimated to be 3/16 inch at its widest.

6. The welds attaching the flexures to the thermal shield have no anomalies and the flexure block and the screws which attach them to the core barrel are as they should be.

B. Limiter Keys (See Figure 5)

1. The four limiter keys (0°, 90°, 180°, 270°) each initially had a "cold" radial clearance or "gap" of .024 inches between the "nose" of the key and the opposing point on the core barrel.

2. The "gaps" measured during this repair outage were:

(This is the first measurement taken since plant operation began)

0° - .100 - .170 inches (range)
90° - .024 inches
180° - .028 inches
270° - .213 - .233 inches (range)

4. The tangential gaps between the Limiter Pin noses and the side of the keyway type configurations in the core barrel component were nominally 3/8 inches as installed. Recent measurements disclose: (looking down, standing outside the thermal shield)

Left Side	Key	Right Side
.446 in.	0°	.241 in.
.398 in.	90°	.378 in.
.472 in.	180°	.350 in.
.405 in.	270°	.371 in.

C. Irradiation Specimen Guides (See Figures 1 and 6)

1. Four of the eight Irradiation Specimen Guide Tubes, (rectangular tubing), showed fairly significant damage, (11°, 28°, 251°, 258°). The 251° tube was most severely damaged. A 5 inch long section was torn away from three sides of the rectangular tube directly below the point where it engages the round section of Guide Tubing (Extension Coupling), at about 10 inches above the top of the Thermal Shield. The 28° Tube has a crack across it's front face which begins at the right side at the beginning of the weld bead and extends about 3/4 the way across the tube's face. The 11° and 258° rectangular Guide Tubes have cracks on at least one corner beginning at their entrance into the round section of Guide Tube and extending downward for a distance of 1 inch or slightly more.

2. The 32°, 131°, 138°, and 151° rectangular Guide Tubes, (which incidentally, are consecutively located around the arc of the Thermal Shield), show little or no damage with the exception of some "fretting" where they enter the round section of Guide Tubes.

3. Four of the rectangular Irradiation Guide Tubes are shifted as much as 3/16 inch to their right, (viewed looking radially inward), as evidenced by their skewed position in the round sections of their respective Guide Tubes. These are the 11°, 28°, 32° and 131° Tubes. On the other hand, the 258° Tube appears shifted approximately 1/8 inch to the left of its center.

D. Lower Support Blocks and Fasteners (See Figures 1, 7 & 8)

1. Six support blocks, 0°, 60°, 120°, 240° and 300°, support the lower end of the Thermal Shield. Seating of all six blocks in the base of the circumferential groove cut into the lower core barrel appears to be normal.

2. All lower dowels and bolts which attach the lower portions of the support blocks to the core barrel show no anomalies as viewed from the outside of the thermal shield.

3. 0° Block - both dowels have cracked lock welds. There appears to be a vertical gap where the Thermal Shield rests on the Support Block. This is a comparative judgement based on the appearance of this seat on the other five support blocks. The gap appears to be of uniform thickness across the full width of the block. A bolt protruding inside the core barrel was observed during the 1988 inspection. (Broken, exiting the back of the tapped hole.)

4. 60°, 120°, and 180° Blocks outwardly appear normal. (No protruding dowels or cracked lock bar welds on the bolts.)

5. 240° Block - The left dowel protrudes 3/4 inch from the face of the Thermal Shield. Lock Bar tack welds are cracked on both bolts. A bolt protruding inside the core barrel was observed during the 1988 inspection. (Bolt broken and "backing out".)

6. 300° Block - the right dowel protrudes approximately 3/4 inch from the face of the Thermal Shield. Lock bar tack welds are cracked on the left bolt.

7. See Figures 10 & 11 for a summary of support block fastener damage as discovered upon block removal in Sept. 1990. Note that the 0° and 240° locations exhibit the most extensive damage, (as discerned at the 1988 inspection), and the 300° location is next, as was predicted analytically in the Westinghouse topical report WCAP 12148.

E. Lower Core Barrel Groove (Vicinity of Support Block Positions) (See Fig. 8)

On Sept. 10, and 11, 1990, a U.T. inspection was performed in regions of the Reactor Internals Lower Core Barrel where the Thermal Shield Support Blocks are attached. With the blocks removed, all six locations were scanned looking for cracks or defects in the core barrel. None were found. Although 2 indications were recorded at the 300° block location, closer evaluation (including a review of the video tapes), identified them as remmants of the broken bolts which remained in the tapped holes of the core barrel.

F. Lower Radial Support Keys and Vessel Keyways (See Figure 1)

1. An examination of the 6 Lower Radial Support keys showed no anomalies. The keys, situated near the lower end of the separate Reactor Internals, engage 6 keyways in the Pressure Vessel, (tight fit), to position the Internals and limit the amplitude of any flow induced vibration. The vessel keyways looked equally good, with all their attachment bolts and locking bars appearing unimpaired. Bearing surfaces appeared clean and burnished with no obvious signs of severe wear or impact damage. (The clearance in this fit is .010 inches per surface, tangentially.)

G. Reactor Internals and Vessel Outlet Nozzles (See Figure 1)

1. A scan of the three outlet nozzle faces on both the Pressure Vessel and Lower Reactor Internals disclosed nothing unusual. No striations or signs of impact damage or fretting wear is evident. The fact that these close-fitting interfacing surfaces are "clean" denotes a stable Lower Internals Assembly. The condition of the Lower Radial Support Keys and Keyways, (F above), also support this conclusion.

H. Bottom of Pressure Vessel Scan

1. Several pieces of metal were evident that appear to be the debris from the heavily damaged 251° Irradiation Specimen Guide Tube.

2. Other debris in evidence consisted of a crescent wrench, (the jaw appeared to be missing), and directly under this object; what appears to be two shim plates estimated to be 2.5 in. x 8 in. x 1/8 in. thick in size. Also, several objects which appeared to be pieces of tape were observed.

3. There were some small, light-weight, water borne particles which were disturbed by the mini-sub, but no "sediment" collected in the bottom of the vessel.

THERMAL SHIELD HARDWARE ASSESSMENT AND COMMENTARY

I. Motion at the Top of the Thermal Shield

The 90° and 180° Limiter Keys have maintained their close radial gaps to the core barrel within several mils, leading to the conclusion that there was minimal motion or preturbation of the thermal shield in this segment of its arc. Further confirmation of this observation derives from the fact that other support and restraining hardware in this general vicinity appear to be in reasonably good condition:

1. 124° flexure - unimpaired/no apparent damage.

2. Irradiation Specimen Guide Tubes - 131°, 138° and 151° locations have no obvious damage such as corner or face cracking or pieces torn away.

3. Lower Support Blocks and Fasteners - 60°, 120°, and 180° blocks and fasteners appear normal, as viewed from the outside.

Conversely, the 0° and 270° Limiter Keys reveal that radial gapping to the core barrel has increased from .024 inch to as much as .170 inch and .233 inch respectively. The condition of nearby support and restraint hardware is consistent with the conclusion that significant thermal shield motion has occured in this area.

4. 21°, 325°, and 244° Flexures are fractured with the 325° flexure exhibiting the largest "gap" between the separated sections of the flexure blade, 3/16 inch.

5. Irradiation Specimen Guide Tubes 28°, 11°, 258° and 251° show signs of cracking and even worse in the case of the 251° Tube where a large section has been physically torn away.

6. Lower Support Blocks and Fasteners - 0°, 300°, and 240° Support Block Fasteners have degraded to various degrees. The 0° and 240° blocks had bolts, which tie them to the Thermal Shield and Lower Core Barrel, partially protruding out of their tapped holes on the inside of the Core Barrel, as observed during a 1988 inspection.

7. Viewing the blocks now from the outside of the Thermal Shield, the 240° location has one of its two dowels protruding, and cracked welds on the bolt lock bars. The 0° location shows both dowel pin lock welds cracked which is likely the precursor to their subsequent "backing out". The 300° block has one dowel pin emerging from the face of the Thermal Shield and a cracked weld on a bolt lock bar.

   In a similar thermal shield damage episode at another plant, flexures were removed early on when it was discovered that they had fractured. SCE's choice to leave failed flexures in place, (4 had failed by 1976), very likely was helpful in restraining motion at the top of the shield. Although cracked, the partially separated blades could act as "buffers" to deter or limit radial displacement of the shield with respect to the core barrel. In some cases, even some part of the shield's tangential motion could be limited based on the direction in which the crack propagated across the flexure blade and the resulting configuration. The 205° and 325° flexures would provide some tangential restraint based on the nature and shape of the "fracture line" in the blades.

J. Thermal Shield Displacement (Top) (See Figure 2)

A review of the video tapes and the written comments on the inspection sheets suggest that the top of the shield has moved to the right or counter-clockwise in the arc extending from 85° to 325°. A move to the left or a clockwise "set" seems apparent in the arc from 180° thru 270°. The arc between 90° and 180° seems stable in the terms of left or right movement with the undegraded 124° flexure residing in that zone.

These observations are as viewed looking down onto the Thermal Shield as regards clockwise or counter-clockwise and outside looking in as regards left or right. (See Figure 9)

1. 85° to 325° arc - features showing displacement, in sequence, are: (Counter clockwise rotation or left to right as viewed "looking in".)

(a)	85° Flexure	1/16 inch
(b)	32° Specimen Tube	1/8 inch
(c)	21° Flexure	3/16 inch
(d)	11° Specimen Tube	5/32 inch
(e)	325° Flexure	3/16 inch

NOTE: The 0° Limiter Key is displaced 0.102 inch to the right of the center (see Para. B4 above), and this observation would support the "shift to the right" scenario. However, it was reported from plant site on 8/25/90 that shims were found in the Limiter Key to Thermal Shield fit at 0° and 180° during the operation which removed the existing Limiter Keys. These shims were ostensibly used when the Limiter Keys were removed, repaired, and then replaced following the plant's first hot functional test in 1966. Note from the measurements presented in para. B4 that the 0° and 180° Limiter Keys have the most disparate "left" and "right" values.

2. 180° to 270° arc - features indicating displacement, in sequence, are: (Clockwise rotation or right to left as viewed "looking in".)

   (a) 1/16 inch 205° Flexure
   (b) 1/16 - 1/8 inch 224° Flexure
   (c) 3/32 - 1/8 inch 258° Specimen Tube

3. 90° to 180° arc - no left or right displacement; features supporting this are:

   (a) 90° Limiter Key - change in radial gap less than .010 inch.
   (b) 124° Flexure undamaged
   (c) 131°, 138° and 151° Specimen Tubes - little or no damage and little or no apparent displacement.

If there is any kind of a pattern to be seen in these data, one might say, "anchor" the top of the Shield at the 124° undamaged Flexure and draw a diametral line thru 304° and say that the Shield has taken a "set" in that direction, and that might come close to explaining the direction and magnitude of the displacements seen in the various Specimen Guide Tubes and Flexures described above. (See Figure 9.) Also, the widest gap in a cracked Flexure is the 3/16 inch gap at 325° (closest Flexure to the 124° - 304° vector). The next largest Flexure blade gaps are judged to be the 244° and 21° locations which "straddle" the proposed 124° - 304° line of Thermal Shield motion.

Further inspection results which became available on 9/2/90 lend further support to the perceived position of the thermal shield. After the bolts and dowels connecting the lower end of the Shield to the Core Barrel were removed, height dimensions were taken from the bottom surface of the Shield down to the Core Barrel groove in which the Support Blocks reside.

(See figure 8 Sect. B-B) Dimension "B" at original assembly was nominally 3.190 inches as measured in the vicinity of each of the 6 Blocks. These measurements now show the Shield to be slightly "tipped" along the 120° - 300° axis, with the Shield lifted .020 inches at 120°, and sitting low at

300° to the extent of .150 inches. Also note on Figure 11, that the only unbroken hidden bolt is at the 120° Block. (Almost directly below the undamaged 124° Flexure above.)

K. Conclusions

The decision by Southern California Edison and Westinghouse in the summer of 1988 to run the plant for another cycle in order to provide time for evaluation, analysis, and a repair design has obviously been justified. Although the Thermal Shield and its associated hardware may have suffered some degree of further degradation in the interval, it is safe to say that the amount of additional degradation represents no safety issue, nor would it have been considered to pose any undue risk during the last 18 months of operation.

The conditions of the Thermal Shield, and its supporting hardware, described in this report, closely resemble those predicted in Westinghouse WCAP 12148, "Engineering Evaluation of the SONGS I Thermal Shield Supports," dated February 1989.

WESTINGHOUSE PROPRIETARY CLASS 3

SONGS 1 THERMAL SHIELD SUPPORT SYSTEM

FIGURE 1

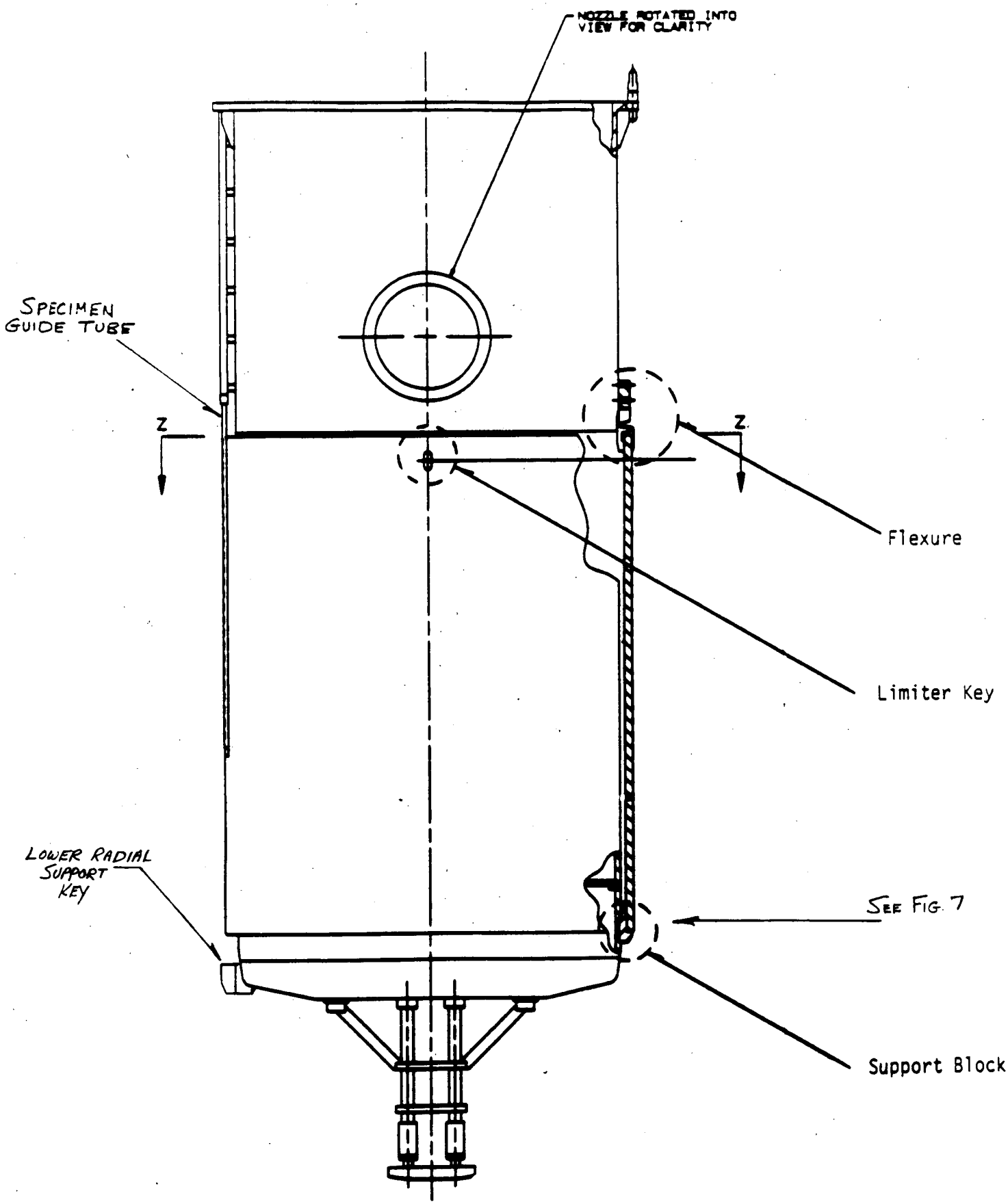

WESTINGHOUSE PROPRIETARY CLASS 3

SONGS 1 THERMAL SHIELD SUPPORT SYSTEM

FIGURE 2

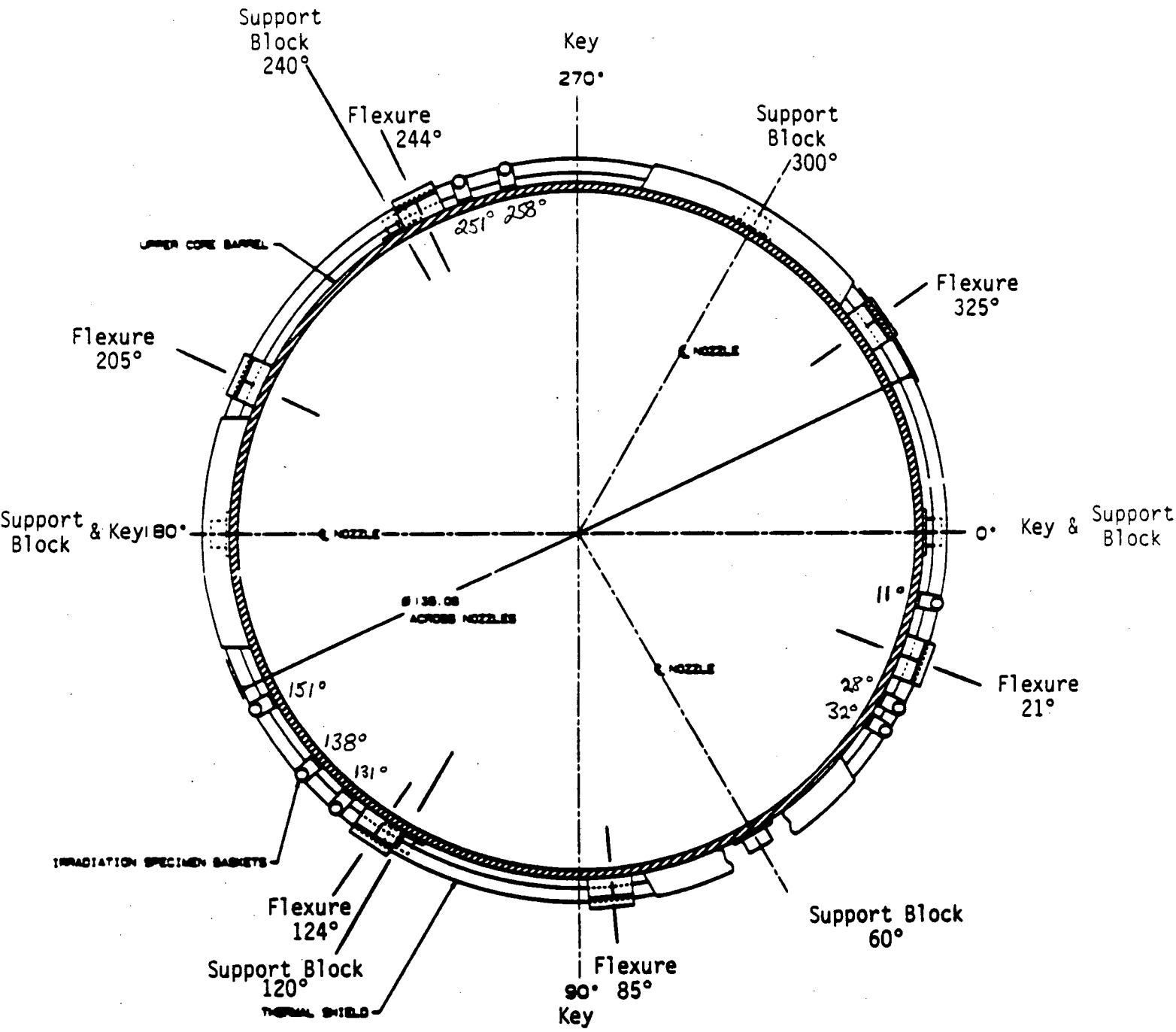

SONGS 1 THERMAL SHIELD SUPPORT SYSTEM
EXISTING FLEXURE

FIGURE 3

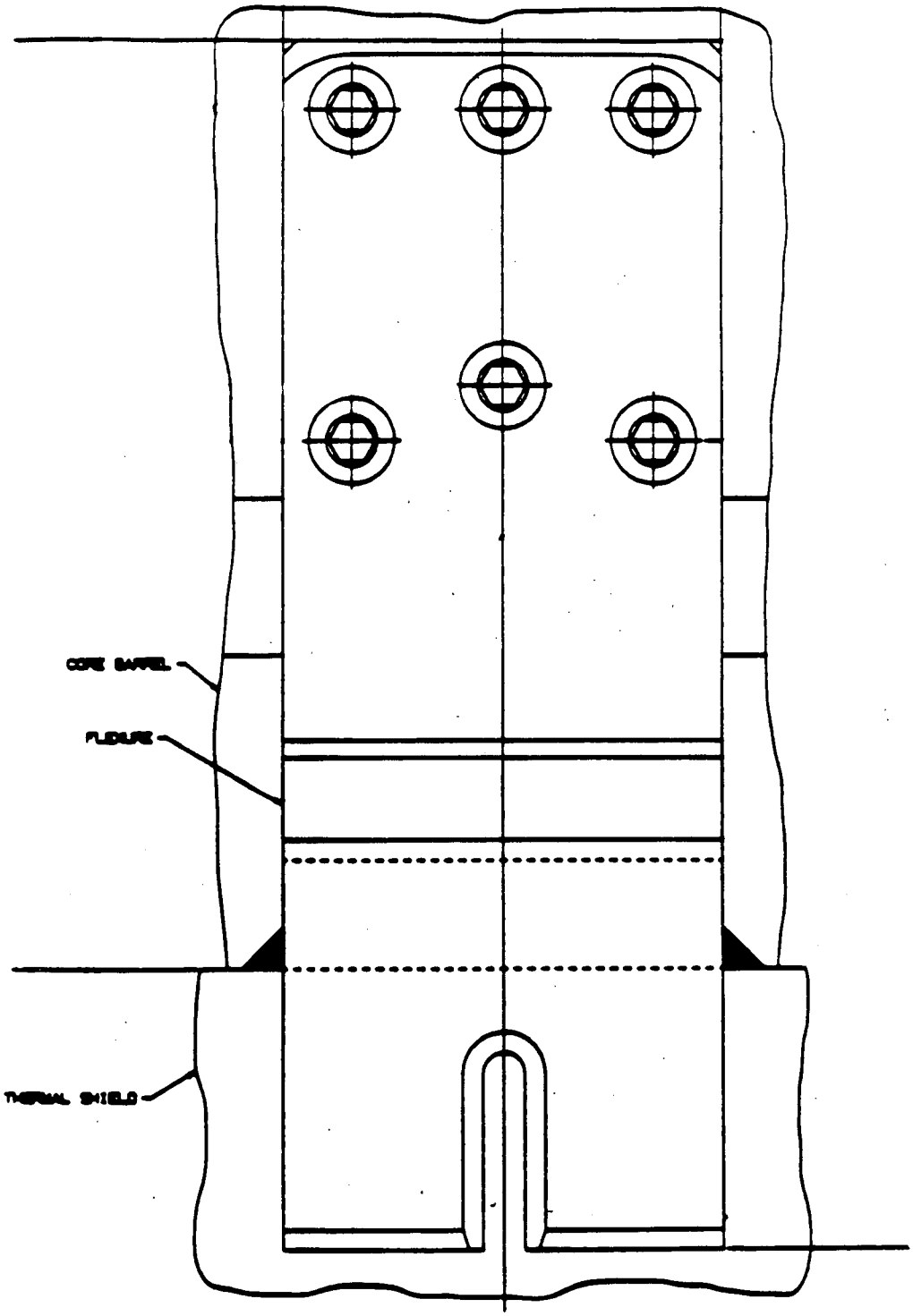

SONGS 1 THERMAL SHIELD SUPPORT SYSTEM EXISTING FLEXURE

FIGURE 4

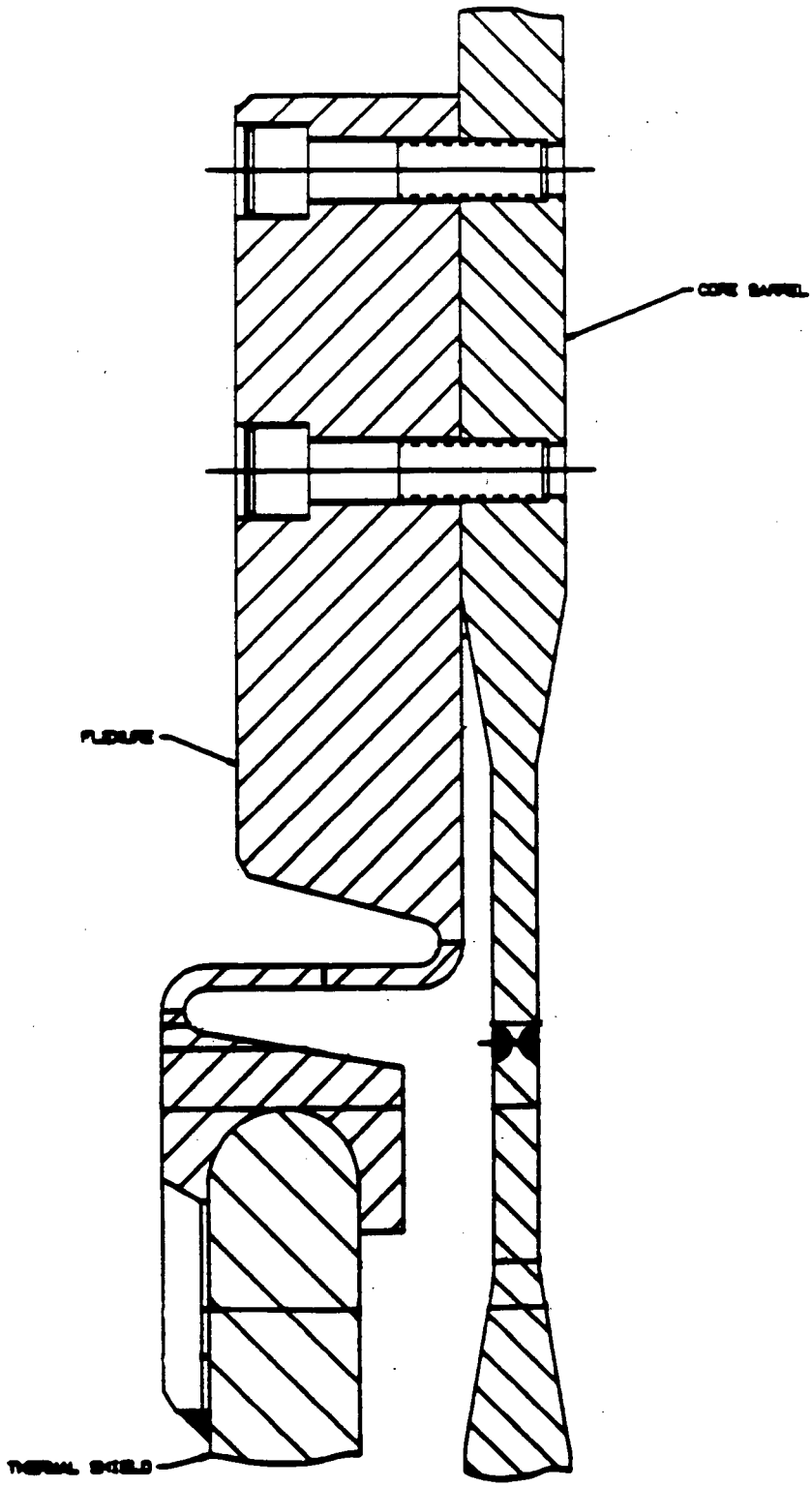

SONGS 1 THERMAL SHIELD SUPPORT SYSTEM EXISTING LIMITER KEY

FIGURE 5

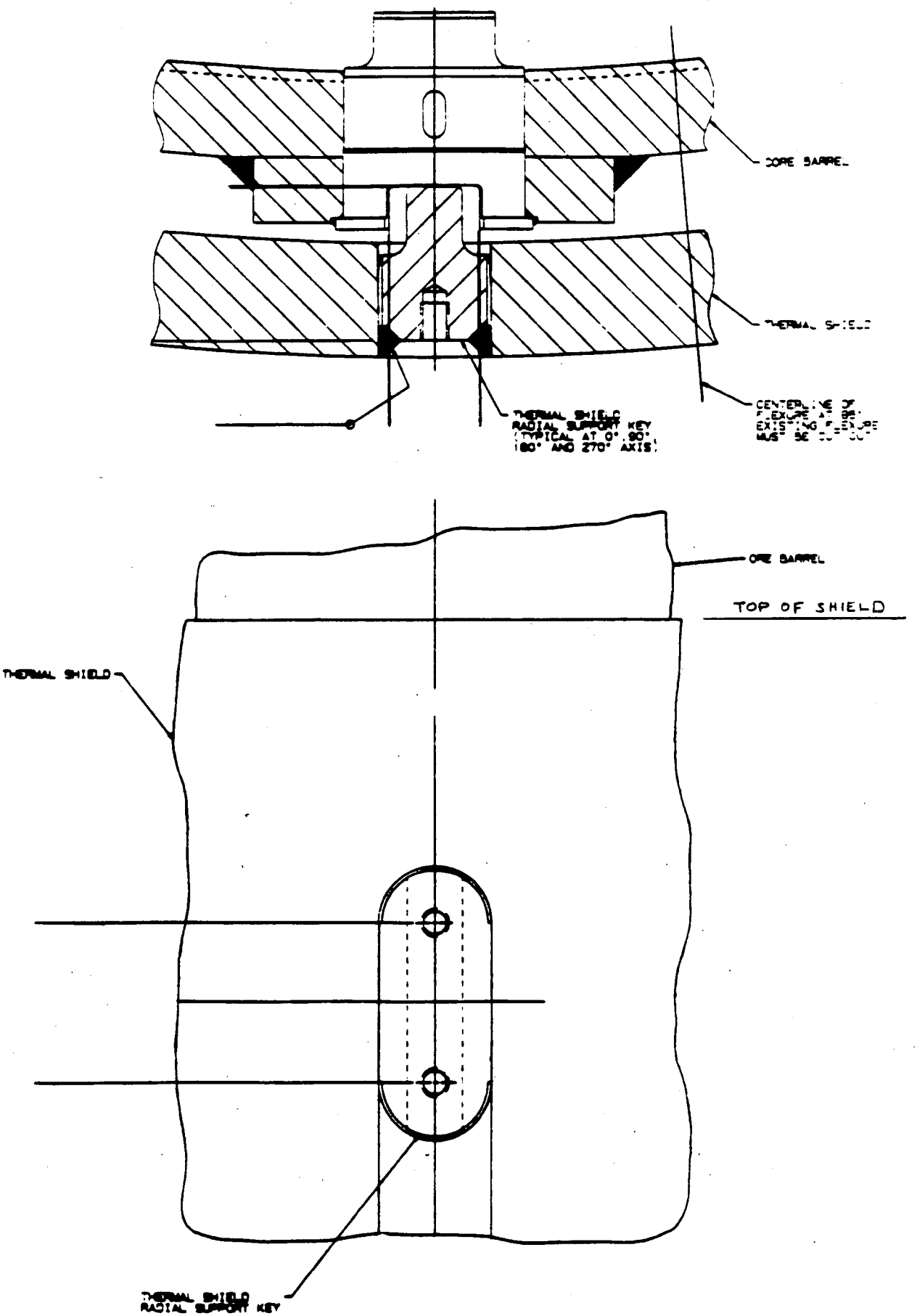

WESTINGHOUSE PROPRIETARY CLASS

SONGS 1 IRRADIATION SPECIMEN GUIDES

FIGURE 6

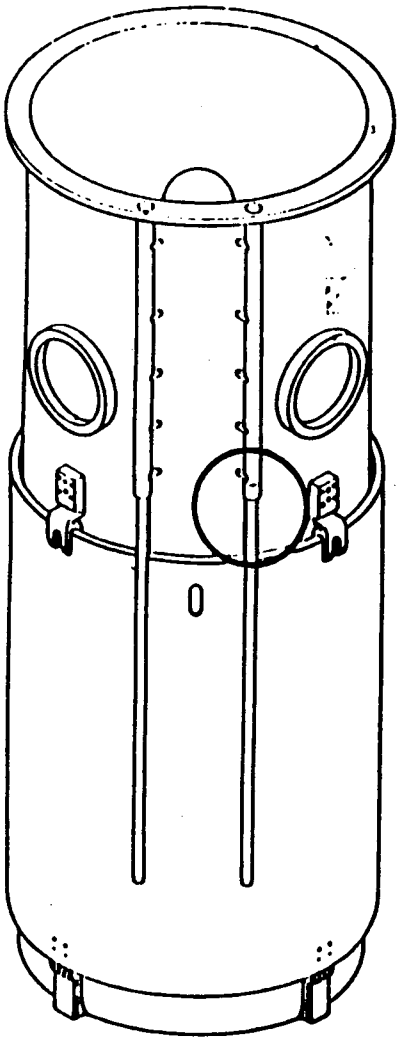

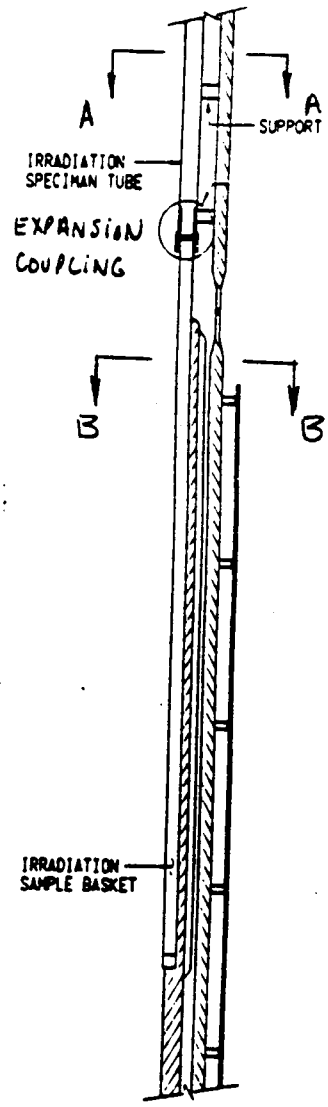

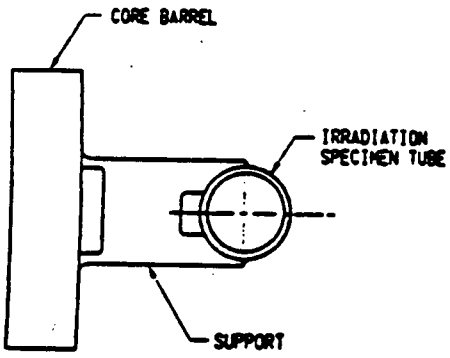

Section A-A

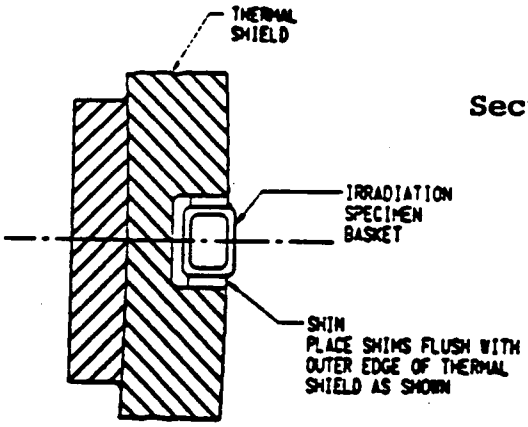

Section B-B

SONGS 1 THERMAL SHIELD SUPPORT SYSTEM
EXISTING SUPPORT BLOCK

FIGURE 7

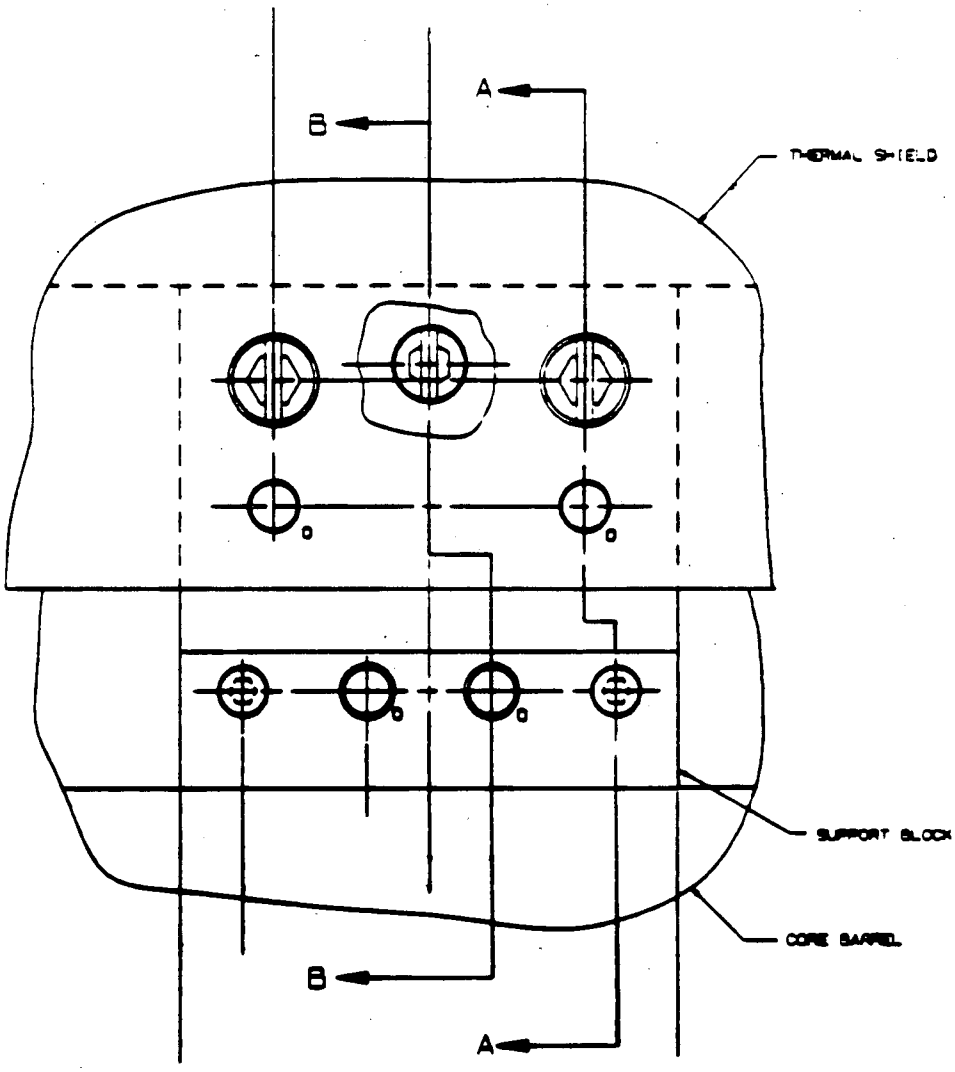

NOTE: See Figure 8 for Sectional Views

SONGS 1 THERMAL SHIELD SUPPORT SYSTEM
EXISTING SUPPORT BLOCK

FIGURE 8

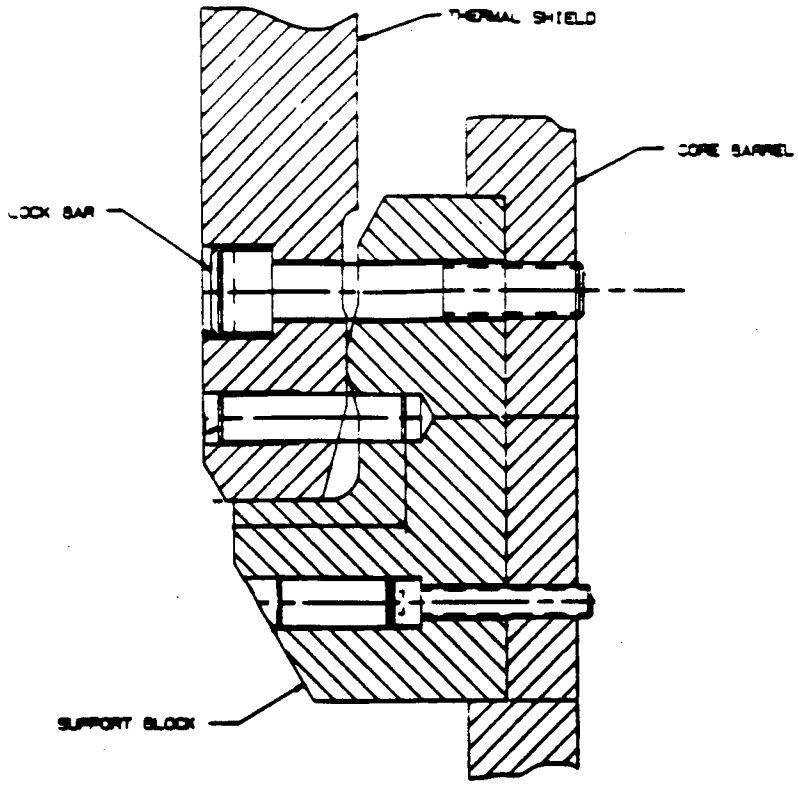

SECTION A-A

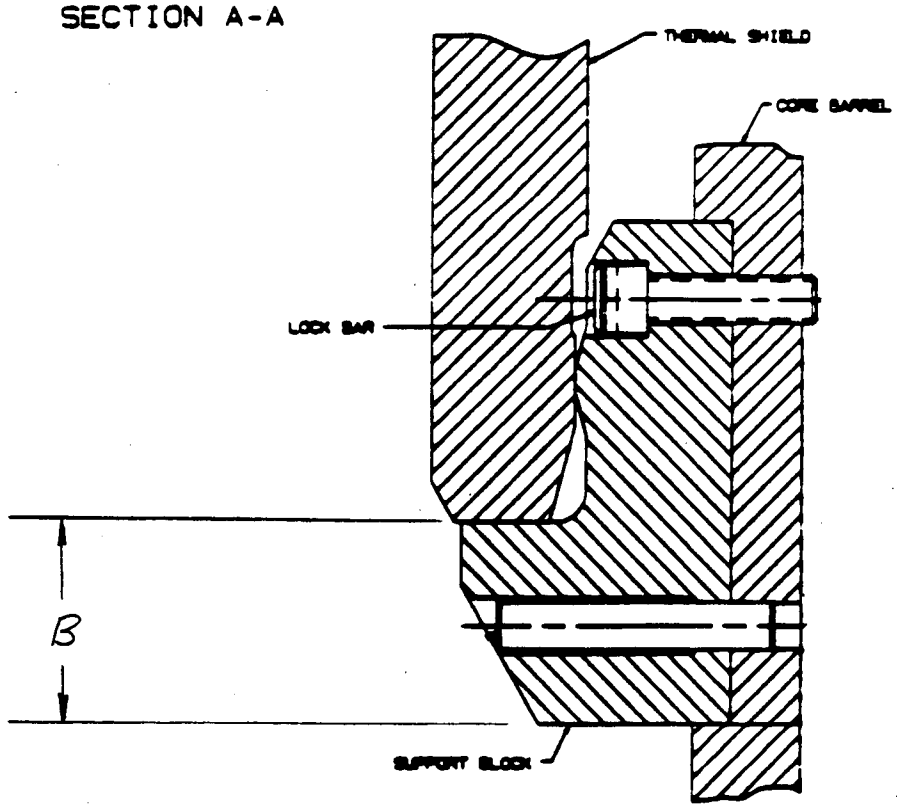

SECTION B-B

WESTINGHOUSE PROPRIETARY CLASS 3

SONGS 1 - THERMAL SHIELD DIRECTIONAL "SET" (TOP)

FIGURE 9

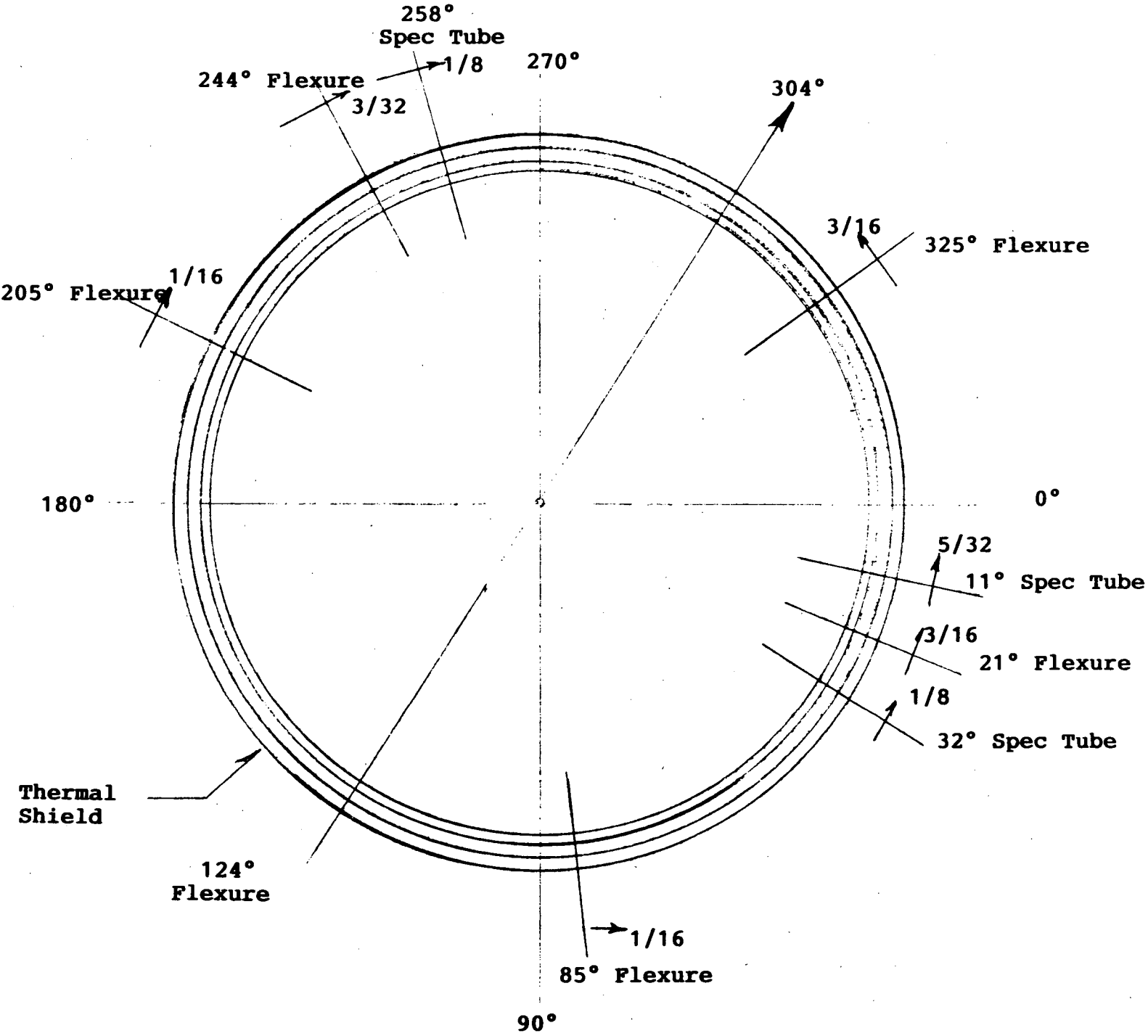

FIGURE 10

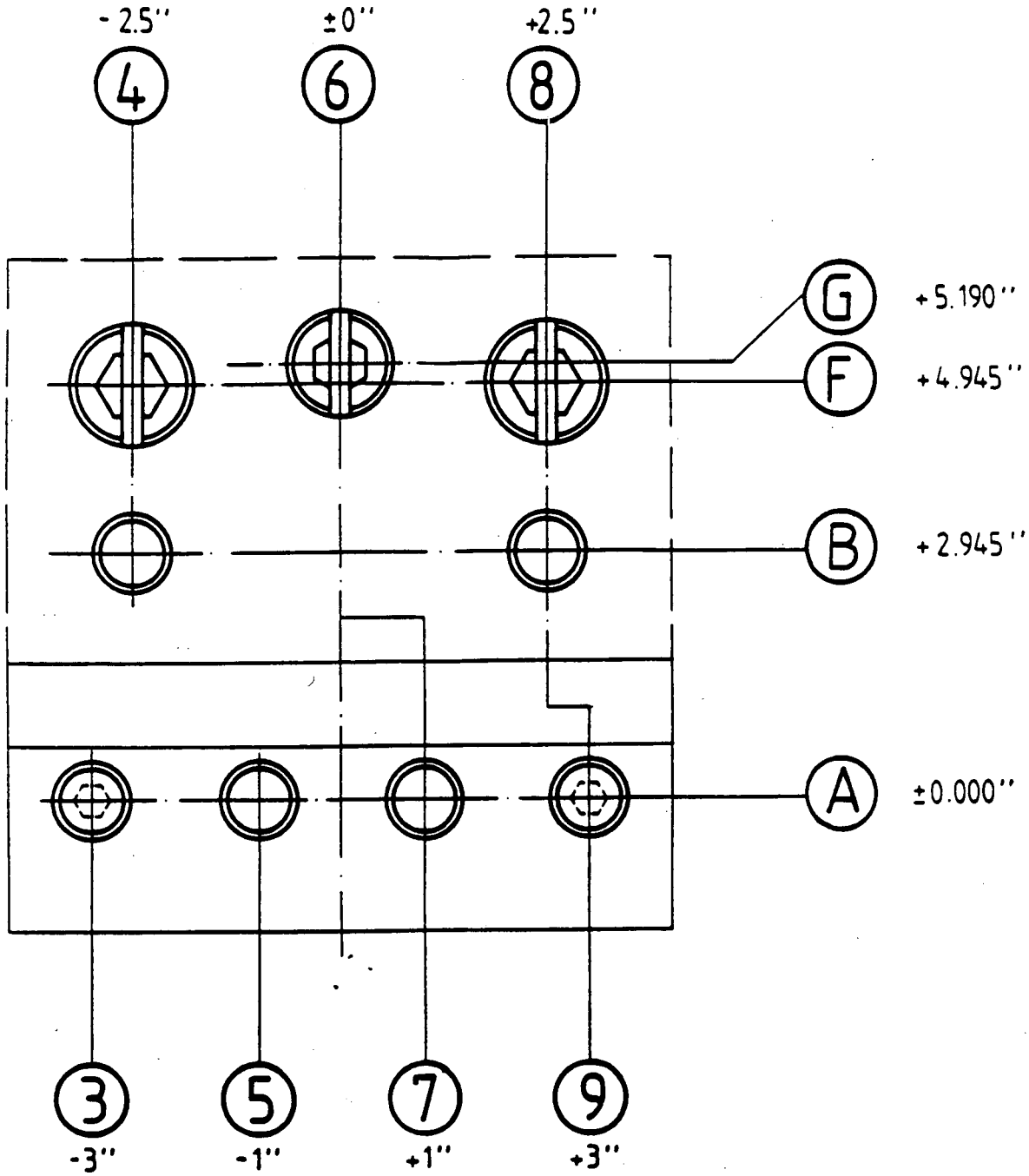

SUPPORT BLOCK - BOLT & DOWEL ARRANGEMENT

FIGURE 11

As Found Condition of the

Support Block Fasteners

	0°	60°	120°	180°	240°	300°
Bolt F4	Broken	Galled?	Broken		Broken	Broken
HIDDEN BOLT G6	Broken	Broken Head/Bolt		Broken	Broken	Broken
BOLT F8	Broken	Galled?			Broken	
A3					Broken	
A9	Broken				Broken	
D. Pin B4	Loose				Loose	Loose
D. PIN B8	Loose					Loose
A5						
A7						