SAN ONOFRE NUCLEAR GENERATING STATION
UNIT 1

SEISMIC EVALUATION OF REINFORCED CONCRETE MASONRY WALLS

VOLUME 1 : CRITERIA

Prepared for:

BECHTEL POWER CORPORATION
Los Angeles, California

Prepared by:

COMPUTECH ENGINEERING SERVICES, INC.
Berkeley, California

January, 1982

REPORT NO. R543.02

SAN ONOFRE NUCLEAR GENERATING STATION
UNIT 1

SEISMIC EVALUATION OF REINFORCED CONCRETE MASONRY WALLS

VOLUME 1 : CRITERIA

Prepared for :

BECHTEL POWER CORPORATION
Los Angeles, California

Prepared by :

COMPUTECH ENGINEERING SERVICES, INC
Berkeley, California

January 1982

REPORT NO. R543-02

TABLE OF CONTENTS

1 GENERAL 1
1.1 Introduction 1
1.2 Scope of the Evaluation 1
1.3 Report Format 2
1.4 Description of Masonry Walls 2

2 CRITERIA 2
2.1 Transverse Loading 3
2.1.1 Method of Analysis 3
2.1.2 Acceptance Criteria 3
2.2 In-Plane Loading 4
2.3 Combined Loading 5
2.4 Incorporation of Wall Properties in Elastic Building Models 6

3 COMMENTARY ON CRITERIA 7
3.1 Transverse Loading 7
3.1.1 Method of Analysis 7
3.1.2 Acceptance Criteria 7
3.2 In-Plane Loading 10
3.2.1 Flexural Mode of Behavior 10
3.2.2 Shear Mode of Behavior 10
3.2.3 Sliding Mode of Behavior 11
3.3 Combined In-Plane, Transverse and Vertical Loading 11
3.3.1 Background 11
3.3.2 100% Transverse + 40% In-Plane Shear and Vertical 12
3.3.3 40% Transverse and Vertical + 100% In-Plane Shear 13
3.4 Incorporation of Wall Properties in Elastic Building Models 14

4 CONCLUSIONS 14

5 REFERENCES 15

1 GENERAL

1.1 Introduction

The NRC IE Bulletin 80-11 (Masonry Wall Design) required an evaluation of the design adequacy of safety related masonry walls in each nuclear power facility with an operating license. Computech Engineering Services, Inc. (CES) was retained by Bechtel Power Corporation, Los Angeles (BPC), to assist in the development of the seismic analysis methodology and acceptance criteria and to perform an evaluation of the transverse behavior of walls at the San Onofre Nuclear Generating Station Unit 1. This volume presents the criteria for the evaluation of the walls and a commentary on the criteria.

Preliminary calculations on the masonry walls indicated that the stress in a number of walls subjected to transverse loads would not remain within typical working stress limits under the postulated earthquake motions and that it would be necessary to take advantange of the inherent ductility in the walls provided by the vertical reinforcing. An analytical procedure based on engineering mechanics principles was developed to predict the dynamic behavior of the walls in the inelastic region subjected to transverse forces. Verification of the model was performed by comparing analytical results with those obtained experimentally and good correlation was obtained. A series of parametric studies was performed to fully understand the characteristics of the model. Based on this study criteria were established for modelling the transverse response of the walls. These criteria were then used to evaluate the transverse performance of the masonry walls whose stress levels were predicted to exceed working stress limits under the postulated earthquake motions. The criteria given in this Volume were then used to assess the acceptability of the walls subjected to combined in-plane and transverse loads.

1.2 Scope of the Evaluation

The scope of the evaluation covered by this series of reports is:

1. Criteria for evaluating the acceptability of the transverse wall analyses.

2. Criteria for evaluating the acceptability of the combined (in-plane and transverse) loadings on the wall.

3. Justification of the criteria.

4. Methodology developed for the inelastic analysis of masonry walls subjected to transverse loads.

5. Results of the transverse analysis of 22 walls in three buildings of the plant. The results were evaluated

in terms of the criteria given in this Volume of the report.

All calculations performed were in conformance with the CES Quality Assurance requirements.

1.3 Report Format

This report contains an introduction, a summary of the scope of the evaluation and a general description of the masonry walls evaluated during the course of the study. The criteria developed for the masonry walls are presented in the form of supplemental criteria for the BOPSSR (Balance of Plant Structures Seismic Reevaluation) criteria (Reference 1). The final section of this volume provides a commentary on the criteria.

1.4 Description of Masonry Walls

The masonry walls at San Onofre Unit 1 are single wythe reinforced concrete block walls constructed from 8 inch thick hollow units with the exception of the biological shielding walls in the control room, which consist of 6 inch thick hollow units. These latter walls are nonstructural and were not included within the scope of this report.

A site visit by personnel from CES and BPC was carried out on August 11-12, 1980. Visual inspection of the walls indicated that the present condition was very good. The walls had good vertical alignment, there were no visible cracks, the masonry units were of good quality and the mortar joints were well constructed and showed no sign of deterioration. All walls have vertical construction joints at approximately 4'-0" on center, effectively enforcing one-way spanning between supports. However, well reinforced bond beams running horizontally at floor levels of all buildings do provide horizontal continuity at these levels. BPC field personnel used a rebar locater to confirm that the reinforcing in the walls was as shown on the drawings.

2 CRITERIA

The criteria listed in this section are supplemental to the plant criteria for the Balance of Plant Structures Seismic Reevaluation (Reference 1). In particular, the criteria given in Section 3.7 3.16 "Masonry Wall Systems" and Section 3.8.4.5.2 "Supplemental Structural Acceptance Criteria - Reinforced Masonry" are specified in detail herein. The criteria in this volume apply generally to both these sections, and where a specific sub-section of the BOPSSR criteria is detailed the cross reference is given.

The criteria included in this section cover transverse, in-plane and combined loadings for masonry walls. Guidelines are also given for the derivation of equivalent elastic properties for incorporating inelastic characteristics of the walls into the elastic finite element models of the buildings.

2.1 Transverse Loading

These criteria relate to centrally reinforced masonry walls which are evaluated for seismic transverse loads using non-linear analysis techniques. These criteria provide additonal detail for the following sections of the BOPSSR criteria (1).

a. Section 3.7.3.16.1 "Analysis Methods for Masonry Wall Subsystems," paragraph 4.

b. Section 3.8.4.5.2 "Supplemental Structural Acceptance Criteria - Reinforced Masonry," paragraph 2 and Table 3.8-3.

2.1.1 Method of Analysis

The following specific methods are used in the analysis of the masonry walls.

(a) Walls are analyzed using either the DRAIN-2D or ANSR-II computer programs.

(b) Model properties are derived in accordance with the methodology contained in Volume 2 of this report.

(c) Each wall is analyzed for a minimum of three time history records appropriately scaled for the specified plant response spectrum.

(d) A maximum damping ratio of 7% of critical is used.

(e) The effects of added mass due to equipment weights are included

(f) The effects of wall openings are studied with respect to the reinforcing and masonry stresses.

2.1.2 Acceptance Criteria

The following acceptance criteria are applied in the analysis of the masonry walls:

(1) Maximum displacement of each wall is limited by:

(a) a maximum reinforcement ductility ratio of 45.

(b) a maximum masonry face shell compressive stress of 0.85 f'm on the net face shell area.

(2) Top wall supports, if flexible, must be capable of accommodating the vertical component of displacement resulting from the maximum horizontal wall displacement. Rigid supports must be capable of resisting the maximum force resulting from the dynamic response of the wall.

(3) The non-linear dynamic response must be stable. This requires

(a) there is no permanent offset in the dynamic response of the wall after the period of strong excitation

(b) when the horizontal wall deflection exceeds the wall thickness the restoring moment due to the inertia force must exceed the overturning moment due to P-Δ force. Allowance for a vertical acceleration equal to 2/3 of the maximum horizontal acceleration is made in computing the wall weight.

2.2 In-Plane Loading

There are three potential in-plane modes of behavior for masonry shear walls. These are the flexural, shear and sliding modes of behavior. The ultimate capacity associated with each mode is determined as described in the following sub-sections. The actual mode of response and ultimate shear capacity of a wall is determined by the lowest of the three ultimate capacities. The governing mode in a particular situation is a function of the height-to-width ratio, the amount of reinforcement and the compressive load on the wall.

A. Flexure

The flexural mode of behavior is characterized by yielding of the vertical reinforcement and its ultimate capacity based on the net area is determined as follows:

i. Single Curvature

$$V_f = 0.425\ (l_w/H)\ (f_y \rho_v + \sigma_c) \quad \ldots\ldots (2\text{-}1)$$

ii. Double Curvature

$$V_f = 0.85\ (l_w/H)\ (f_y \rho_v + \sigma_c) \quad \ldots\ldots (2\text{-}2)$$

where

V_f	=	shear stresses corresponding to the flexural capacity based on the net area.
l_w	=	length of the wall
H	=	height of the wall
f_y	=	nominal yield strength of vertical reinforcement
σ_c	=	compressive stress on the wall based on the net area
ρ_v	=	ratio of area of vertical reinforcement to the net horizontal area of the wall

B. Shear

The shear mode of behavior is characterized by diagonal cracking, and its capacity (Vs) for the masonry walls at San Onofre, Unit 1 is determined as per Table 3.8.4 of BOPSSR Criteria (Reference 1).

C. Sliding

The sliding mode of behavior is characterized by sliding along a cracked horizontal joint of a wall and its capacity (V_{sl}) can be determined as follows:

$$V_{sl} = \mu \sigma_c + 0.85\ \rho_v f_y \quad \ldots\ldots (2\text{-}3)$$

where the coefficient of friction μ shall be taken as 0.75.

2.3 Combined Loading

The acceptance criteria for combined load effects is as follows:

1. The ultimate shear capacity associated with each of the three modes of behavior given in Section 2.2 are determined. The capacities determined by equations 2-1, 2-2 and 2-3 include the effect of vertical acceleration on the compressive stress σ_c. In addition to these three modes of behavior, the ultimate shear

capacity of a wall subjected to combined in-plane and transverse loading is limited by the ultimate sliding capacity (V_{sh}) of the wall at the mid-height crack. This capacity is determined as follows:

$$V_{sh} = 0.85(\rho_v f_y) \quad \ldots\ldots\ldots\ldots\ldots\ldots \quad (2\text{-}4)$$

where

ρ_v = ratio of area of vertical reinforcement to net horizontal sectional area.

f_y = nominal yield strength of vertical reinforcement

The lowest of the four capacities determined by equations 2-1, 2-2, 2-3 and 2-4 governs the in-plane shear strength of the wall subjected to combined in-plane, transverse and vertical loading.

2. The criteria given in Section 2.1.2 govern the transverse load case when combined load effects are considered except that the compressive stress on the face shell at the mid-height crack due to combined loading is limited to a compressive stress of 0.85 f'm. The compressive stress is calculated by adding the compressive stresses resulting from the transverse loading and the ultimate in-plane shear force. Vertical excitation is accounted for by assuming it acts with gravity.

2.4 Incorporation of Wall Properties in Elastic Building Models

The objective of including models of the masonry walls in the elastic models of the buildings is to determine the impact of the response of the walls on the total building response. Thus the models for the masonry walls, although elastic, model as accurately as possible the non-linearities of masonry wall behavior. To do this one model is used to characterize the out-of-plane response of the walls and a different model is used for the in-plane response.

The model for the elastic out-of-plane response of the walls as stated above represents as accurately as possible the inelastic response of the walls. In general, the results of the non-linear transverse analysis for a specific wall will be required for the derivation of equivalent model properties.

To reproduce the maximum effects of the out-of-plane wall response the following procedure is followed:

(a) use the actual wall mass

(b) if the maximum support reactions occur in the elastic range use 1.5 (EI)cr for the effective stiffness.

(c) if maximum reactions occur during the inelastic response compute an effective EI using the mass in (a) such that the period matches the elongated value.

The model for the in-plane response of the walls accounts for the significant stiffness degradation that has been observed in test results for walls stressed to their ultimate capacity. In order to account for this effect, the modulus of elasticity is reduced by 20%.

3 COMMENTARY ON CRITERIA

The discussion in this section provides background information and justification for the criteria stated in Section 2. It also applies to the equivalent criteria in the BOPSSR document (1) Sections 3.7.3.16 and 3.8.4.5.2.

3.1 Transverse Loading

3.1.1 Method of Analysis

The method of analysis and derivation of model properties are fully documented in Volume 2 of this report. The minimum number of time histories has been set at 3. The form and scaling of time histories is assessed for each wall depending on specified maximum ground acceleration, building amplification of the ground motion, etc. In Volume 3 the scaling factors and earthquake time histories used for the wall analyses are discussed.

3.1.2 Acceptance Criteria

(1) Displacement Limitations

While an actual numerical limit on maximum allowable displacement has not been specified, the limits in this section and the stability criteria in (3) effectively impose displacement limits.

Grade 40 deformed reinforcing has a specified minimum elongation of 12%, which corresponds to a ductility ratio (Eu/Ey) of 90. A limit of one-half this value has been set. The maximum masonry compression is restricted to its ultimate strength value of 0.85 f'm assuming a uniform distribution on the face shell.

(2) Support Conditions

Wall supports are modelled in the analyses either as fixed or sliding depending on the rigidity of the supporting structure and the connection to the structure. For a flexible support the maximum deflection from the analyses is checked against the deformation capability of the connection. If the support is rigid the reaction forces obtained from the analyses are used to check the capacity of the wall and the connection at the point of attachment.

(3) Stability

The overall dynamic stability of the wall is judged from the displacement time history at the mid-span node. The wall should not retain a permanent offset after the period of strong shaking, i.e. the oscillations should continue about the zero displacement line rather than establishing a new, deflected reference line.

Second order effects are evaluated using an equivalent static procedure for checking P-Δ stability. The wall weight is increased to take account of vertical accelerations equal to 2/3 the maximum horizontal acceleration. This gives a factor of 2/3 x 0.67g = 0.45g. Consider the deflected wall model at a time T as shown in Figure 3-1. Figure 3-1 is drawn for a central deflection, Δ, equal to the wall thickness, D. For rotation about the toe of the wall this is the displacement limit for the wall to be in stable equilibrium. For displacements greater than D stability requires that a load P must act to oppose the incremental overturning moment. This load P is provided by the instantaneous inertia force. Taking moments about the toe of the wall, the overturning moment is:

$$M_o = \frac{(\Delta - D)}{2} \times \frac{W}{2} \times 2$$

$$= \frac{W}{2} (\Delta - D)$$

and the resisting moment is provided by

$$M_R = P \times H / 2$$

where

$$P = \sum m_i a_i$$

= sum of mass times acceleration over all nodes.

For a uniform mass,

$$P = M \times a$$

where

M = Total wall mass

a = average acceleration over all nodes.

therefore

$$P = W \times a / g$$

Stability requires that

$$M_R > M_o$$

i.e.

$$\frac{a}{g} > \frac{\Delta - D}{H}$$

Therefore the average acceleration in g's must exceed the deflection minus the wall thickness divided by the wall height and must be in a direction to oppose further deflection. To obtain the average effective acceleration the DRAIN-2D displacements are differentiated twice numerically and the ground acceleration at the corresponding time step added to obtain absolute accelerations. The actual deflections are increased by a factor of 1.45 to account for the vertical accelerations.

3.2 In-Plane Loading

3.2.1 Flexural Mode of Behavior

There have been four experimental test programs that have included an investigation of the flexural mode of behavior. The test programs of Scrivener (2), Williams (3) and Priestley and Bridgeman (4) were on piers in single curvature. The test program of Mayes et al (5) was on piers in double curvature. Each of the four test programs used formulations similiar to those given by Eqs. 2-1 and 2-2 (see Section 2.2) and were able to predict the yield flexural capacity within 15% of the experimental capacity. In most cases the experimental capacity exceeded the theoretically predicted value. Therefore, Equations 2-1 and 2-2 are well validated by experimental results. A capacity reduction factor of 0.85 is used so that Equations 2-1 and 2-2 provide a lower bound on all experimental test results.

3.2.2 Shear Mode of Behavior

The capacity of the shear mode of behavior has been evaluated in several experimental investigations. A review of the numerous approaches used to date is given in Reference (6). The prediction of the ultimate capacity of the shear mode of behavior is complicated by the fact that it is affected by a number of variables including (a) axial stress (b) amount of reinforcement and (c) height-to-width ratio. The results of the most extensive test program performed to date (7, 8, 9, 10) are summarized in Table 3-1. The ultimate strength τu is expressed as a ratio of $\sqrt{f'm}$. Figure 3-2 presents a plot of the ratio $\tau u/\sqrt{f'm}$ versus the height to width or M/Vd ratio.

The range of ultimate shear strengths from the test results is given in Table 3-2. Also included in the table are the recommended strength values for walls with no horizontal reinforcement, walls with a percentage of horizontal reinforcement to gross area between 0 and 0.2% and walls with the same percentage of steel greater than 0.2%.

For the masonry walls at San Onofre, Unit 1 the percentage of horizontal reinforcement to gross wall area is approximately 0.08% and the specified f'm is 1350 psi. Table 3-3 presents a comparison of the ACI allowable stresses multiplied by 1.67 and the recommended ultimate strength of Table 3-2 for the case where the percentage of horizontal reinforcement is between 0 and 0.2%. The ACI allowables for both masonry and reinforcement taking all the shear are compared with the recommended ultimate strength.

It is clear from Table 3-3 that 1.67 times the ACI allowable stress for the case where reinforcement takes all the shear should not be used as an ultimate stress for the walls at San Onofre, Unit 1. For the case where masonry takes all the shear the factor of safety varies

between 1.30 and 1.48. This factor of safety coupled with the adequate ductility and inelastic performance of the piers provides a reasonable margin of safety for the walls when the shear mode of behavior governs.

3.2.3 Sliding Mode of Behavior

The sliding mode of behavior occurs as the result of a sliding plane developing along a bed joint where the vertical steel yields in the flexural mode of response. This has been observed in the test programs of Priestley (4) and Mayes (5) as well as the tests performed by Bechtel as part of the masonry wall analysis on the Trojan Nuclear Power Plant. The capacity of the sliding mode of failure is based on the shear friction developed along the failure plane. The first of the two components in Equation 2-3 is the friction force developed from axial compression. The coefficient of friction of 0.75 is taken as the lower bound value derived by Hatzinikolas (11) and used by Bechtel on the Trojan Nuclear Power Plant (12). The second component in Equation 2-3 is the friction force developed due to the normal force developed as a result of yielding of the vertical reinforcement. The coefficient of friction of 0.85 is the average of the values used in ACI 318-77 (Section 11.7) for concrete placed against hardened concrete (1.0) and concrete placed against rolled structural steel (0.7). A value of 1.4 was used by Bechtel in the Trojan tests and was capable of predicting the capacity of the sliding mode of failure of eleven tests within 15%. Generally the predicted value was conservative in that it was lower than the test results. In the twelfth test the predicted value was lower than the test result by 22%.

3.3 Combined In-Plane, Transverse and Vertical Loading

3.3.1 Background

The criteria for combined in-plane, transverse and vertical loading is based on the premise that the wall must be capable of resisting either 40% of the maximum in-plane shear load, 40% of the vertical load and 100% of the maximum transverse load or 100% of the maximum in-plane shear load and 40% of the vertical and maximum transverse loads.

Significant transverse loading on a wall will induce a full length horizontal bed joint crack somewhere near the mid-height of a wall. Thus the effect of this type of crack and the effect of vertical acceleration on the shear capacity must be examined. Before evaluating the combined load cases, the effect of a mid-height horizontal crack on the three potential in-plane shear modes of behavior will be discussed for the two deflected positions of the wall shown in Figure 3-3. In Figure 3-3(a) the presence of a mid-height wall crack on an undeflected wall will not effect the flexural, sliding or diagonal shear capacity. For

flexure in single curvature the moment at the crack is only one-half the moment corresponding to the ultimate capacity and in double curvature the moment is negligible in the cracked region. Although the capacity of the sliding mode of behavior is unaffected by the mid-height crack it is probable that sliding may occur at the level of the crack if sliding is the governing mode of behavior. If shear (diagonal cracking) is the governing mode of behavior then sliding will be prevented at all horizontal joints.

For the deflected shape shown in Figure 3-3(b) shear transfer across the opened joint must be by friction developed on the face shell in compression. For a wall with the minimum vertical reinforcement of No. 5 at 32 inches on center at San Onofre, Unit 1, maximum compressive force (C) will be equal to the yield force of the reinforcement. Thus

$$C = Asfy = 0.3 \times 40{,}000$$
$$= 12{,}000 \text{ lb}$$

This corresponds to a uniform compressive stress of 300 psi on the 1 1/4 inch face shell which is significantly lower than the allowable flexural compressive stress. The shear stress for a fully grouted wall that can be transferred by shear friction along the joint assuming a coefficient of friction of 0.85 is

$$= \frac{12{,}000 \times 0.85}{32 * 7.5}$$

$$= 42.5 \text{ psi}$$

Thus for the maximum deflected shape shown in Figure 3-3(b) walls at San Onofre, Unit 1, are capable of resisting a shear stress of at least 42.5 psi. due to shear friction along the face shell in compression at the point of maximum transverse moment. For the combined loading case with 100% of transverse load this shear stress would correspond to 40% of the maximum allowable in-plane shear load. Thus for the case of vertical reinforcement with No. 5's at 32 inches on center, 40% of the maximum allowable shear stress under combined loading would be the lower of 42.5 psi or 40% of the stresses corresponding to the three modes of behavior described in Section 3.2 if they are lower than 42.5 psi.

3.3.2 100% Transverse + 40% In-Plane Shear and Vertical

The governing in-plane mode of behavior as discussed in Section 3.2 is determined by the lowest strength of the three potential modes of behavior including the effect of vertical acceleration on the compressive stress σ_c. For a wall subjected to combined loads, the limitations on shear friction discussed in the preceeding paragraphs provide bounds on the potential modes of behavior i.e. if the net strengths associated with three potential modes of behavior flexure, shear and sliding exceed

the shear friction capacity of the wall in its fully deflected position of Figure 3-3(b) and given by Equation 2-4 (Section 2.3) then Equation 2-4 will govern the in-plane shear strength of the wall. It should be noted that Equation 2-4 does not include any of the positive contribution of dead load compressive stresses and is therefore a lower bound.

If the strength associated with any one of the three potential modes of behavior is less than the shear friction capacity of the wall given by Equation 2-4 then sliding will not occur when the wall is deflected as shown in Figure 3-3(b). In this case an evaluation of the capability of the wall to resist 40% of the strength of the governing mode of behavior must then be made for the deflected shape shown in Figure 3-3(b).

This evaluation will be performed with the use of examples and a maximum in-plane shear stress of 90 psi will be used for the calculations.

For a wall where flexure in single curvature is the governing mode of in-plane behavior and deflected as shown in Figure 3-3(b) the face shell in compression due to transverse loading is subjected to a compressive force equal to the yield force produced by the steel. The overturning moment at the mid-height crack due to the in-plane force will not be capable of producing a net tension force at this location and therefore the only check required is that the total compressive stress on the face shell is less than the allowable flexural compressive stress.

For a wall where flexure in double curvature is the governing mode of behavior there will be little or no moment at the location of the mid-height crack and as sliding will be prevented, the wall is capable of resisting the combined 100% transverse and 40% in-plane and vertical loads.

For a wall where sliding governs the limitation given by Equation 2-4 will ensure adequate performance under the combined 100% transverse and 40% in-plane and vertical load because Equation 2-4 is the sliding capacity at 100% of the transverse load neglecting any contribution of dead load compressive stresses on this capacity.

3.3.3 40% Transverse and Vertical + 100% In-Plane Shear

This load case is more difficult to evaluate because the stresses and deflection of the wall at 40% of the transverse load have not been calculated. For the purposes of this discussion it will be assumed that the deflections resulting from 40% of the transverse loading are less than one-half the values for 100% transverse loading and also that the vertical steel has yielded at the mid-height crack due to the transverse loads.

As with the load case for 100% transverse plus 40% in-plane shear and vertical load the most critical case will be when the flexural mode

of behavior in single curvature governs. The compressive stress on the face shell of the wall at the mid-height crack due to the combined load must be calculated. For adequate performance this should be less than the allowable flexural compressive stress. If sliding is the governing mode of behavior Equation 2-4 will govern.

As with the load case with 100% transverse load plus 40% in-plane shear and vertical load, when shear (diagonal tension) and flexure in double curvature are the governing modes of behavior and sliding is prevented the wall will be capable of resisting 100% of the in-plane and 40% of the transverse and vertical loads.

3.4 Incorporation of Wall Properties in Elastic Building Models

Criteria for incorporating out-of-plane wall properties into the finite elastic element building model are based on matching the maximum reaction force and the elongated period after yielding.

The flexible support, i.e. the girder and building framing, is included in the building model. Therefore, if properties for the out-of-plane wall model were chosen to match the reaction force from the inelastic analysis the coupling effects of the flexible supports would be included twice. For this reason the criteria given for incorporation of wall properties relate only to the wall itself, excluding the support system.

The reaction forces obtained from the inelastic analysis would be localized, instantaneous forces arising from coincidence of the maximum response of the wall and its support system. Because of their local nature they are unlikely to be excited in the overall building model analysis. Therefore the values from the non-linear analysis are used to check the adequacy of the wall-structure connections.

4 CONCLUSIONS

This volume has presented criteria for the evaluation of masonry walls at the San Onofre, Unit 1 plant in the form of supplemental information for the BOPSSR criteria (2). The criteria cover transverse loading, in-plane loading and combined load cases and provide details both for methods of analysis and acceptance limits. Criteria are also given for the incorporation of the masonry wall properties into the elastic building model.

A commentary and justification for the criteria is provided. The references for the experimental data on which the in-plane and combined criteria are based are listed.

5 REFERENCES

1. Bechtel Power Corporation "Balance of Plant Seismic Re-Evaluation Criteria" SONGS-1, February 1981.

2. Scrivener, J.C., "Concrete Masonry Wall Panel Tests - Static Racking Tests with Predominant Flexural Effect," New Zealand Concrete Construction, 1966.

3. Williams, D. "Seismic Behavior of Reinforced Masonry Shear Walls," Ph.D. Thesis, University of Canterbury, New Zealand, 1971.

4. Priestly, M.J.N., "Seismic Resistance of Reinforced Concrete Masonry Shear Walls with High Steel Percentages," Bulletin of the New Zealand National Society for Earthquake Engineering, Vol. 10, No. 1, March 1977.

5. Mayes, R.L., Omote, Y. and Clough, R.W., "Cyclic Shear Tests of Masonry Piers, Vol. II - Analysis of Test Results," EERC Report No. 76-16, University of California, Berkeley, California, 1976.

6. Computech Seminar Notes, "A State-of-the-Art Review - Masonry Design Criteria," Computech Engineering Services Inc., Berkeley, California, June 1980.

7. Mayes, R.L., Omote, Y. and Clough, R.W., "Cyclic Shear Tests of Masonry Piers, Vol. I - Test Results," EERC Report No. 76-8 University of California, Berkeley, 1976.

8. Hildago, P., Mayes, R.L., McNiven, H.D. and Clough, R.W., Cyclic Loading Tests of Masonry Single Piers: Volume 1 - Height to Width Ratio of 2," EERC Report No. 78-27, University of California, Berkeley, 1978.

9. Chen,S.W., Hildalgo, P., Mayes, R.L., Clough, R.W. and McNiven, H.D., "Cyclic Loading Tests of Masonry Piers: Vol. 2 - Height to Width Ratio of 1," EERC Report No. 78-28, University of California, Berkeley, 1978.

10. Hildago,P., Mayes, R.L., McNiven, H.D. and Clough, R.W., "Cyclic Loading Tests of Masonry Piers: Vol. 3 - Height to Width Ratio of 0.5," EERC Report No. 79-12, University of California, Berkeley, 1979.

11. Hatzinikolas,M. Longworth, J. and Warwaruk, J., "Evaluation of Tensile Bond and Shear Bond Masonry by Means of Centrifugal Force," Alberta Masonry Institute, Edmonton, Alberta.

12. Portland Gas and Electric submitted to NRC for Trojan Nuclear Power Plant, March 17, 1980.

Specimen	Vertical Steel Reinforcement (%)	Horizontal Steel Reinforcement (%)	Prism Compressive Strength f'm (psi)	Average Ultimate Shear Stress τ_u (psi)	Pier Axial Stress at τ_u (psi)	$\frac{\tau_u}{\sqrt{f'm}}$
HCBL-21 -1	0.98	-	2432	135	- 77	2.74
-3	0.44	-	2256	142	+ 53	2.99
-5	0.98	-	2592	106	+119	2.08
-7	0.98	0.52	2805	212	+ 15	4.00
-9	0.98	-	2519	154	-308	3.06
HCBL-11 -1	-	-	1330	123	-120	3.37
-3	0.17	-	1833	127	- 69	2.97
-4	0.17	0.08	1833	165	-107	3.85
-6	0.17	0.24	1833	199	-144	4.65
-7	0.43	-	1905	146	- 91	3.35
-9	0.43	0.17	1905	146	-114	3.35
-11	0.43	0.48	1310	231	-139	6.33
HCBL-12 -1	0.30	-	2988	310	-194	5.67
-2	0.30	0.05	2988	330	-200	6.03
-3	0.30	0.10	2988	398	-243	7.28
-4	0.30	0.15	2988	344	-212	6.29
-5	0.30	0.20	2988	361	-215	6.60
-6	0.30	0.29	2988	413	-234	7.56

TABLE 3-1 : SUMMARY OF BERKELEY TEST RESULTS ON FULLY GROUTED PIERS

			Range of the Ratio of Average Ultimate Shear Stress τ_u to $\sqrt{f'm}$ From Test Results			Recommended Ratio of the Ultimate Shear Stress to $\sqrt{f'm}$		
Material	Height to Width Ratio	M/Vd Ratio	Jamb Steel Only	Light Horizontal Reinforcement (<0.002) (1)	Heavy Horizontal Reinforcement (>0.002) (1)	Jamb Steel Only	Light Horizontal Reinforcement (<0.002)	Heavy Horizontal Reinforcement (>0.002)
Hollow Concrete Block	2:1	1.0	2.08-3.06	-	4.00	1.5	2.0	3.0
	1:1	0.5	2.97-3.37	3.35-3.85	4.65-6.33	3.0	3.5	4.5
	1:2	0.25	5.67	6.03-7.28	7.56			
		0				4.5	5.0	6.0

NOTE: (1) The ratio of horizontal steel corresponds to the area of steel to the gross area of the pier.

TABLE 3-2 : RECOMMENDED ULTIMATE STRENGTHS FROM U.C. BERKELEY TESTS

M/Vd	Ultimate Shear Strength from Berkeley Tests (psi)		1.67 times ACI Allowable Shear For f'm= 1350 psi.		Ratio $\frac{\text{Ultimate}}{1.67\ \text{ACI}}$	
	General	f'm= 1350	Masonry Takes Shear	Reinforcement Takes Shear	Masonry Takes Shear	Reinforcement Takes Shear
1.0	$2.0\sqrt{f'm}$	73.4	56.8	125.0	1.30	0.59
0.5	$3.5\sqrt{f'm}$	128.0	90.0	162.5	1.42	0.55
0.0	$5.0\sqrt{f'm}$	183.0	123.6	200.0	1.48	0.91

TABLE 3-3 : COMPARISON OF ULTIMATE SHEAR STRENGTH AND 1.67 TIMES ACI ALLOWABLES

H = Wall Height

D = Wall Thickness

Δ = Central Deflection

W = Total Weight of Wall Strip

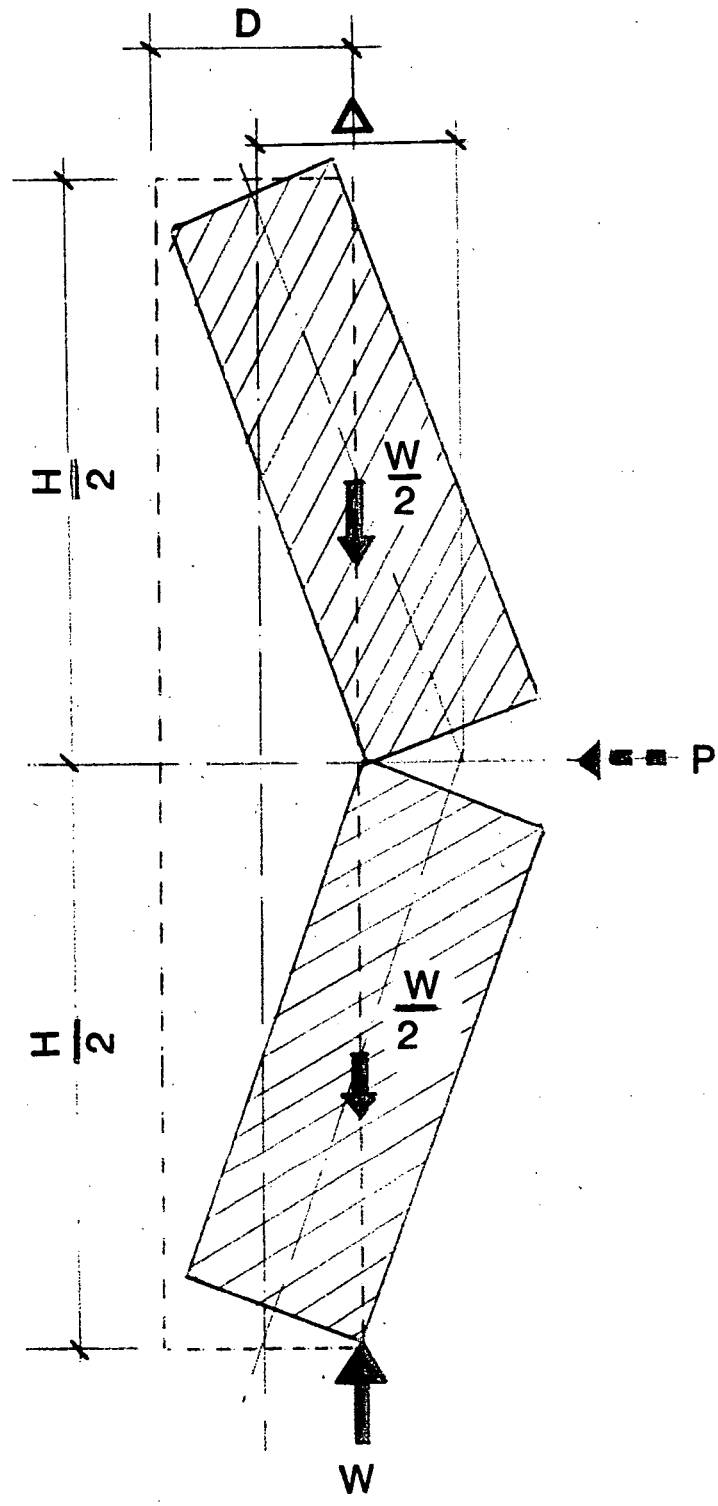

PROJECT NO 543	SAN ONOFRE NUCLEAR GENERATING STATION UNIT 1	FIGURE NO.
DRAWN		3.1
CHECKED		

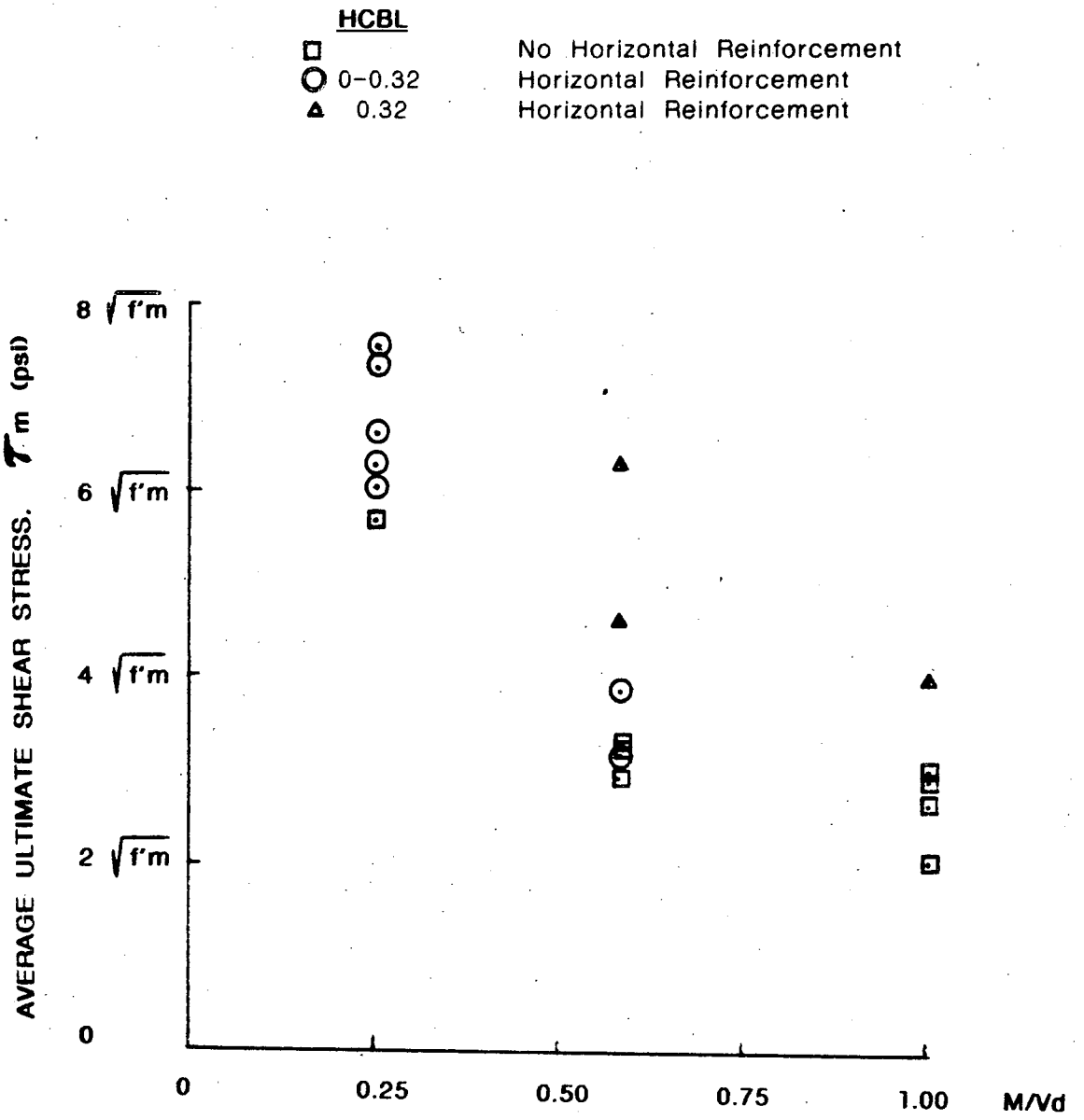

FIGURE 3-2 : ULTIMATE SHEAR STRESS vs M/Vd RATIO

PROJECT NO 543	SAN ONOFRE NUCLEAR GENERATING STATION UNIT 1	FIGURE NO
DRAWN		3-2
CHECKED		

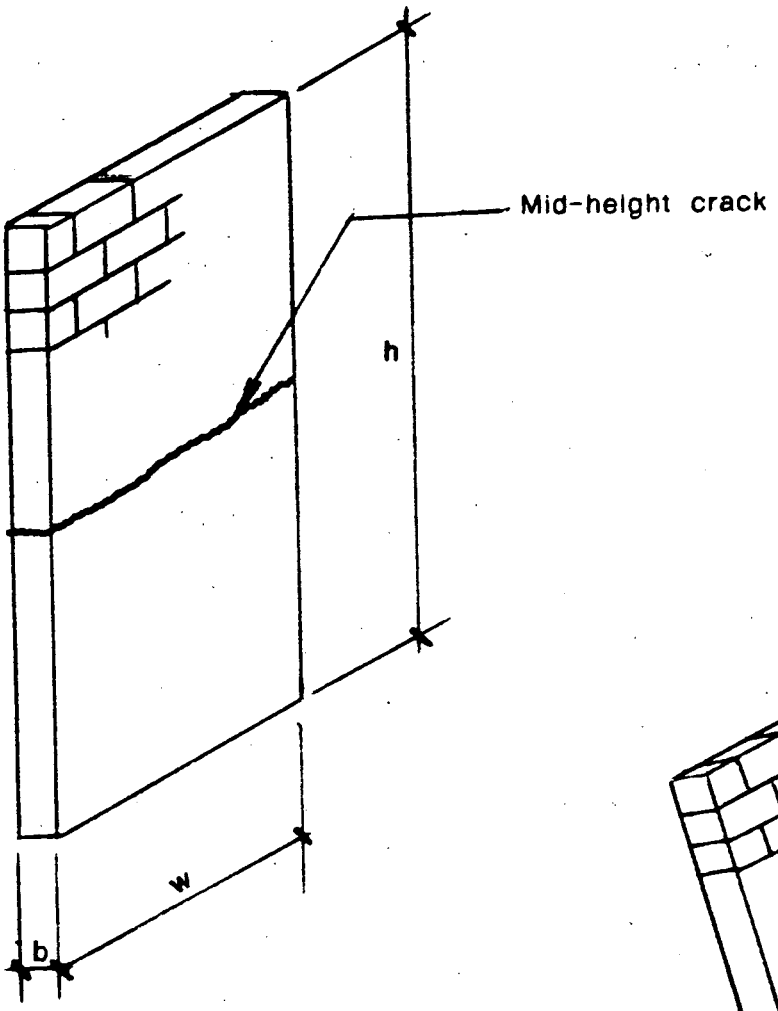

(a) Undeflected Wall

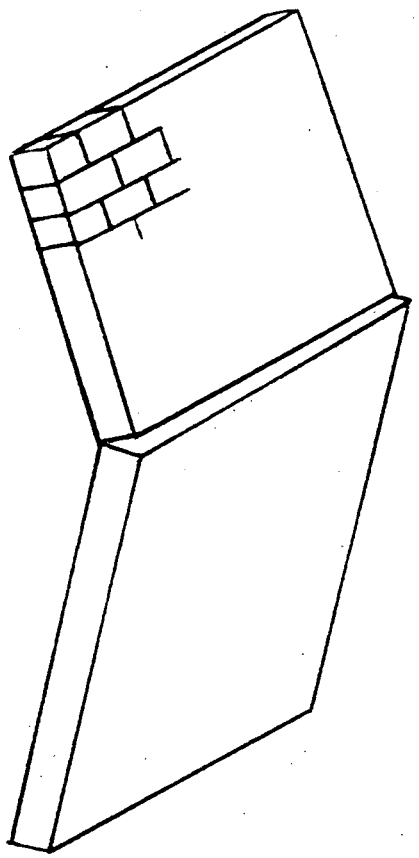

(b) Deflected Shape at 100% of Transverse Loading

PROJECT NO 543	SAN ONOFRE NUCLEAR GENERATING STATION UNIT 1	FIGURE NO
DRAWN		3-3
CHECKED	DEFLECTED POSITIONS OF WALL	