Southern California Edison Company

P. O. BOX 800
2244 WALNUT GROVE AVENUE
ROSEMEAD, CALIFORNIA 91770

September 13, 1982

Director, Office of Nuclear Reactor Regulation
Attention: D. M. Crutchfield, Chief
Operating Reactors Branch No. 5
Division of Licensing
U. S. Nuclear Regulatory Commission
Washington, D.C. 20555

Gentlemen:

Subject: Docket No. 50-206
SEP Topics II-3.A and II-3.B
San Onofre Nuclear Generating Station
Unit 1

On March 3, 1982 we met with the NRC Staff and their consultants at the San Onofre site to discuss the NRC's review of the subject SEP topics. As a result of that meeting, certain additional information was requested. The requested information is provided as an enclosure to this letter. It should be noted that completion of this information has been delayed due to efforts associated with the seismic reevaluation program.

If you have any questions on any of this information, please let us know.

Very truly yours,

R W Krieger

R. W. Krieger
Supervising Engineer
San Onofre Unit 1 Licensing

Enclosure

A035
1/11 Encls Rec'd

Aperture Card Distribution

Limited Dist

ITEM:

Provide information which supports a groundwater elevation of +5 feet.

RESPONSE:

Section 2.4.13 (copy attached) of the San Onofre Units 2 and 3 FSAR indicates that the average groundwater elevation beneath the site is +5 MLLW. The FSAR also indicates that the water table is influenced by tidal fluctuations. These tidal fluctuations are reflected in the range of .1 to .3 of their height in the water table elevation, depending on the proximity of the point measured to the shoreline, and generally reach that value an hour after the tidal high or low has passed.

Based on an average elevation of +5 MLLW, the maximum additional increase in the water table elevation would be 1.5 feet for a new water table elevation of +6.5' MLLW. Conversely, for the lowest tide, the new water table elevation would be +3.5' MLLW. The average water table elevation would, in any case, be a reasonable value for use in design.

Additionally, it should be noted that the water table intersects the shoreline at mean sea level and increases in elevation as it is measured further from the shoreline. At a location close to the shoreline, such as at the seawall, the water table elevation would tend to be less than that used as an average elevation for the site in general.

ITEM:

Will water pond at the base of the diesel generator ventilation deflectors and then spill over the 9" curb onto any safety related equipment?

RESPONSE:

Water collected by the diesel generator vent deflectors during the PMP can be handled by the existing 2-1/2" invert drain which is indicated in detail 1 on drawing 5149213-6.

ITEM:

Provide copies of the seawall wave impact calculations referred to on page 2 of SCE's March 15, 1982 submittal to the NRC.

RESPONSE:

A copy of the calculations for wave impact force and their application to the seawall is attached.

ITEM:

Was credit taken for the beach walkway in the analysis of the seawall subsequent to a DBE? If so, what was the basis for it?

RESPONSE:

Credit was taken for the walkway being in place subsequent to a DBE. The reason for this is that the backfill materials under the walkway itself were installed as safety related and were compacted to 95% in accordance with QA requirements. An analysis of the rip-rap in front of the walkway also indicated that it would remain stable during and after DBE ground shaking. A copy of calculations in support of this is attached.

ITEM:

How much beach erosion was assumed in front of the seawall?

RESPONSE:

Testimony of Omar J. Lillevang on May 19, 1976 as part of the San Onofre Units 2 and 3 hearings and an evaluation by SCE of beach erosion conclude that the typical minimum beach elevation will be +10 MLLW. The beach was conservatively assumed to erode to Elevation +7 MLLW for analysis.

ITEM:

The main culvert draining the east bluff area had an open grate over a manhole just west of the onsite PMF berm. This could allow some runoff to spill over the edge of the bluff and down into the main plant area. Should this be a pressurized cover?

RESPONSE:

The cover for the inlet manhole on the east bluff will ultimately be a pressurized cover. In accordance with the original drawings, a temporary open grate cover was installed to enable the manhole to function as a catch basin for local runoff until the Aesthetic Mound and Bike Path Project and grading around the manhole are completed. This is scheduled for completion in midyear, 1983. The permanent pressurized cover will be installed at that time.

ITEM:

Will the north flood wall be stable during the PMF?

RESPONSE:

Calculations show minimum factors of safety for overturning and sliding stability in excess of 1.5 for all load cases on the north flood wall. Load cases checked included dead and live loads, wind, horizontal and vertical seismic, hydrostatic, earth retention and H20 truck loading.

ITEM:

Provide a profile of both the north channel drainage ditch and wall.

RESPONSE:

The profiles of the north channel drainage ditch and wall are shown on drawings 5153121-2, 586621-0, 589762-0, 5153107-2 which are attached.

ITEM:

Are the roofs of structures with parapets designed to handle ponding to the top of the parapet?

RESPONSE:

In a previous submittal to the NRC it was noted that only the roof of the diesel generator building was designed for ponding to the top of the parapet. In addition, all other roofs with parapets (fuel storage building and ventilation equipment building) have combined drains and scuppers sufficient to handle the PMP.

ITEM:

Provide a copy of the PMF drainage area map showing flow arrows.

RESPONSE:

A copy of the drainage area map showing flow arrows is attached.

5494

2.4.13 GROUNDWATER

2.4.13.1 Description and Onsite Use

San Onofre Units 2 and 3 are located at the southern boundary of the San Onofre Valley Groundwater Basin (Basin No. 9-3).[38] The Basin lies within the South Coastal Hydrologic subregion of California as defined by the California Region Framework Committee (1968).[38] The Basin extends inland from the coast about 21 km (13 mi) and dissects the Santa Margarita Mountains which lie inland to the east (figure 2.4-5). The Basin is bounded on the south by the northwest-trending San Onofre Mountains which form a barrier to drainage toward the coast. A southwest-trending ridge separates the San Onofre Valley Basin from the San Mateo Creek Basin which lies immediately north.

San Onofre Valley Groundwater Basin is drained by San Onofre Creek and its tributaries Jardine, San Onofre North Fork, and San Onofre Canyons to the northeast, and San Onofre Canyon South Fork to the east. The drainage area of the San Onofre Valley Basin covers about 112 km^2 (43 mi^2) of which about 85% consists of steep sided mountains, about 10% consists of unconsolidated alluvium in the valleys, and about 5% of elevated terrace deposits. The Santa Margarita Mountains range in elevation from 122 to 152m (400 to 500 ft) near the coast to 975m (3198 ft) at Margarita Peak near the eastern boundary of the San Onofre Creek drainage divide. The valley floor of the San Onofre Basin ranges in elevation from 3m (10 ft) near the ocean to a maximum of 244m (800 ft) at the head of Jardine Canyon.

Stream gradients in lower San Onofre Creek range below 1%. Gradients in the tributary canyons range from 1.5 to 2.5% in the lower reaches, increasing up to 7.7% in the upper reaches.

The important water-bearing formations in the San Onofre Valley Basin consist of sedimentary strata of Pliocene, Pleistocene, and Recent age.[40] Older formations are well indurated and are essentially non water-bearing. These older rocks consist of the Miocene Monterey, the San Onofre Breccia, the older La Jolla Group and pre-Tertiary sedimentary rocks.

The oldest of the productive water-bearing strata is the Capistrano Formation. The Capistrano consists of poorly to semi-consolidated, thinly-bedded marine siltstone, fine-grained sandstone and shale with local limestone concretions, conglomerate, and breccia. The Capistrano Formation crops out immediately to the northwest of San Mateo Creek in southern Orange County.[39]

The water-bearing San Mateo Formation underlies the portion of the San Onofre Valley Basin west of the Cristianitos fault (see figure 2.4-26). The San Mateo consists of about 274m (900 feet) of light brown to yellow, medium-to coarse-grained sandstone. The formation is massive to thickly bedded, poorly cemented and well consolidated.

Alluvium is the most important of the water-bearing strata of the San Onofre Valley Basin,[38][39] and occurs as unconsolidated valley fill reaching a maximum depth of about 30m (100 ft) and an average depth of about 21m (70 ft).[40] Alluvium is composed of boulders, gravel, sand, and silt. Production wells in the San Onofre Basin are located exclusively in the alluvial area which is the primary source of groundwater.

The principal recharge areas are the stream channels and alluvium in the upper parts of valleys.[38] Minor amounts of water recharge the basin from percolation of recycled sewage effluent[41] and surface storm runoff.

Figures 2.4-27 and 2.4-28 show locations of wells and groundwater contours for typical basin high and low groundwater conditions. Groundwater occurrence, east of the Cristianitos fault, is restricted almost entirely to the alluvium. This is due to the thick sequence of relatively impermeable formations underlying the alluvium in this location. Groundwater moves downstream through the alluvium and passes over the Cristianitos fault. West of the fault the alluvium is underlain by the San Mateo Formation. In this area, flow is not as restricted by underlying formations and disperses into the lower basin. The contours figures 2.4-27 and 2.4-28) indicate that groundwater moving through the alluvium has a shallower gradient and is less restricted than movement occurring within the San Mateo Formation. Contours indicate that groundwater movement is to the west and southwest toward the ocean. Geologists at Camp Pendleton have indicated that well data suggests the San Mateo Formation acts as an effective barrier against groundwater movement between the San Onofre Valley and San Mateo Valley Groundwater Basins. For this reason groundwater conditions in the San Mateo Basin should have no effect on the groundwater conditions beneath or in the vicinity of the site.

Fresh water requirements of the San Onofre plant will be met totally by water obtained from local water agencies and therefore no water will be derived from aquifers beneath or in the vicinity of the site for plant-related use.

2.4.13.2 Sources

The San Onofre Valley Groundwater Basin lies completely within the boundary of the Camp Pendleton Marine Corps Base. Groundwater use within the basin is under the direction and control of the Marine Corps. Presently, all water derived from the San Onofre Basin is for military use. Military security dictates that detailed information concerning amounts of water withdrawn, water levels, and locations of production wells remain classified. However, general information is available, including a limited amount of well data. San Onofre Valley Basin groundwater supplies only a partial quantity of Camp Pendleton's total consumption and is limited directly by the amount of precipitation and recharge which occurs. Marine Corps policy requires the maintenance of a seaward gradient of the groundwater table at all times to prevent intrusion of saline water into fresh water aquifers.[42] This policy prohibits the withdrawal of considerable amounts of groundwater stored in alluvium below or near sea level. Past groundwater withdrawals have fully utilized the basins potential up to the policy limits. Future groundwater usage from the San Onofre Basin is expected to remain the same as past usage with no projected changes.

Groundwater fluctuations within the San Onofre Basin are controlled primarily by recharge and groundwater pumpage by the Marine Corps. Indications are that the basin rapidly accepts recharge. Well data have shown the basin to be almost completely replenished within 1 year (1952) following a 6-year dry spell.[39][40] Largest fluctuations of the groundwater table occur in the upper portion of San Onofre Creek and the area immediately west of the Cristianitos fault (see figure 2.4-26).

The average groundwater elevation beneath the site is +5 mllw.[41] Fluctuations within the pumped regions of the San Onofre Basin have had no measured impact on the level of groundwater at the San Onofre site.

Tidal effects on the groundwater levels in piezometers at the site have been monitored. Wells located closer to the ocean are generally more responsive to tidal fluctuations. Amplitudes of the fluctuations in observation wells are proportional to amplitudes of tidal fluctuations. The ratio of observation well to tidal fluctuations range from 0.1 to 0.3 for wells located between the containment spheres and the shore. Wells located a few hundred meters east of the units centerline are less responsive. The time lag between tidal highs and lows and the corresponding change in observation wells is generally about an hour (appendix 2.4A).

Groundwater contours are shown in figures 2.4-27 and 2.4-28 for typical high and low groundwater conditions.[42] Groundwater gradients within the alluvium to the east of the Cristianitos fault range from about 0.83% to 1.00%. Gradients in the alluvial portions of the lower basin to the west of the Cristianitos fault range from about 0.11% to 0.50%. Gradients within the San Mateo Formation are slightly higher ranging from 0.17% to 1.0% with groundwater elevations dropping to sea level at the coast. Groundwater gradients are steepest over the Cristianitos fault ranging from 1.25% to 1.67%.

The San Mateo Formation underlies the site to a depth of approximately 274 km (900 ft). Boring logs indicate that the San Mateo is quite homogenous from the surface to below 91 km (300 ft).

Pump test data indicate an average horizontal permeability for the San Mateo Formation of 0.0076 m/min (0.025 ft/min). Data were evaluated on the basis of several approaches. These included (1) equilibrium methods; i.e., methods based on the assumption that a steady-state drawdown condition had been reached, and (2) non-equilibrium methods: methods based on the mathematical relationship between the rate of water lowering to permeability prior to reaching a steady-state (appendix 2.4A, page 3).

Detailed data and the pump test report are included in appendix 2.4A. A minimum value for vertical permeability for the San Mateo Formation of 0.0015 m/min (0.005 ft/min) was determined on the basis of grain size (using Allen Hazen's formula and correction).[43]

Studies have shown that reversal of groundwater flow from the site toward pumping wells in San Onofre Valley Basin cannot reasonably occur. According to SCE San Onofre Unit 1, Final Engineering Report and Safety Analysis, page 8 (1965),[42] "The established minimum pumping level for San Onofre Creek wells is above the elevation of the water table at the site so that even under extreme pumping conditions in San Onofre Creek, a seaward gradient will exist. Hence, a flow of groundwater toward the ocean from both San Onofre Creek and the site will be assured".

The groundwater table beneath the site approaches sea level as movement toward the ocean occurs. The groundwater gradient across the site is therefore influenced by tidal fluctuations. Piezometer measurements at the site indicate the gradient ranges below 0.3%. Available groundwater elevation data at the nearest Marine Corps observation well (9/7 -24H1), which lies about 914m (3000 ft) northwest of the site (figure 2.4-5), indicate a maximum fluctuation of about 1.07m (3.5 ft) due to groundwater withdrawals from the San Onofre Valley Basin.[40] This would cause a maximum variation of the average gradient from this well to the ocean of about 0.4 to 0.6%. Based on these gradients, the maximum expected change in water level at the site due to pumping in the San Onofre Creek Basin would be about 0.30m (1.0 ft). Since water extractions are not expected to change in the future, these values would also not be expected to change.

Recharge of the San Onofre Valley Basin occurs in the upstream parts of stream channels and alluvium in the upper region of the valley.[38] There are no potential groundwater recharge areas within the influence of the plant.

2.4.13.3 Accident Effects

As discussed in paragraphs 2.4.13.1 and 2.4.13.2 there is a groundwater gradient toward the ocean of approximately 0.4 to 0.6%. The nearest water supply wells serve the Marine Corps and are located in San Onofre Creek over 1 mile inland from the plant site. Marine Corps policy is to maintain the groundwater table throughout Camp Pendleton sufficiently above mean sea level to eliminate the possibility of saline water intrusion from the ocean into the freshwater aquifers. The established minimum pumping level for the San Onofre Creek wells is above the elevation of the water table at the site. Thus a seaward gradient will exist even under extreme pumping conditions in San Onofre Creek and the flow of groundwater toward the ocean from both San Onofre Creek and the site is assured. Based upon this gradient, groundwater movement from the site toward any present or projected users will not occur. There is no present or projected usage of groundwater at the San Onofre site. In addition, subsection 15.7.3 discusses the design features of the plant which mitigate the effects of a tank leak or failure. Based upon the above, no analysis of an accidental release of liquid radioactive material is required.

ENGINEERING DEPARTMENT

CALCULATION SHEET

SUBJECT: Sea wall - SONGS 1 DESIGN CALCULATION NO. DC _____ - _____

J.O. NO. 6307 MADE BY C. WANG DATE 6-16-81 CHK. BY TW DATE 7/8/82

WAVE IMPACT FORCE

Design Criteria	Reference
1. Still water level (SWL) = 15.6' MLLW.	1. SONGS 2 & 3 FSAR Sect's 2.4.5.2.5 & 2.4.6.1
2. Critical wave period (T) = 4 sec.	2. Curves on shts 5 & 6 (Figs B & C) developed from "A Statistical survey Of Ocean Wave Characteristics In Southern California Waters" by Marine Advisers for US Army Corps of Engineers, dated Jan 1961 (Contract No. DA-04-353-CIVENG-60-37)
3. Depth of eroded beach at rip-rap protection in front of beachwalkway is conservatively taken as +7' MLLW.	3. Testmony of Omar J. Lillevang, May 19, 1976 & R. Grove's letter dated March 1, 1978, indicated typical eroded beach to be elev. +10. MLLW.
4. Depth of water (ds): at seawall toe = SWL - Elev. at top of beach walkway = 15.6' - 14' = 1.6'.	4. SCE Dwg # 5180943 for beach walkway construction.
5. Slope of eroded beach (m) = 1:40	5. US Army Corps of Engineer Dwg # D-726-72-3. (Sht 9, Fig A)

DWG. NO.

ENGINEERING DEPARTMENT

CALCULATION SHEET

SUBJECT: SONGS 1 - SEA WALL DESIGN CALCULATION NO. DC _____ - _____

J.O. NO: 6307 MADE BY C. WANG DATE 6-16-81 CHK. BY DW DATE 7/8/82

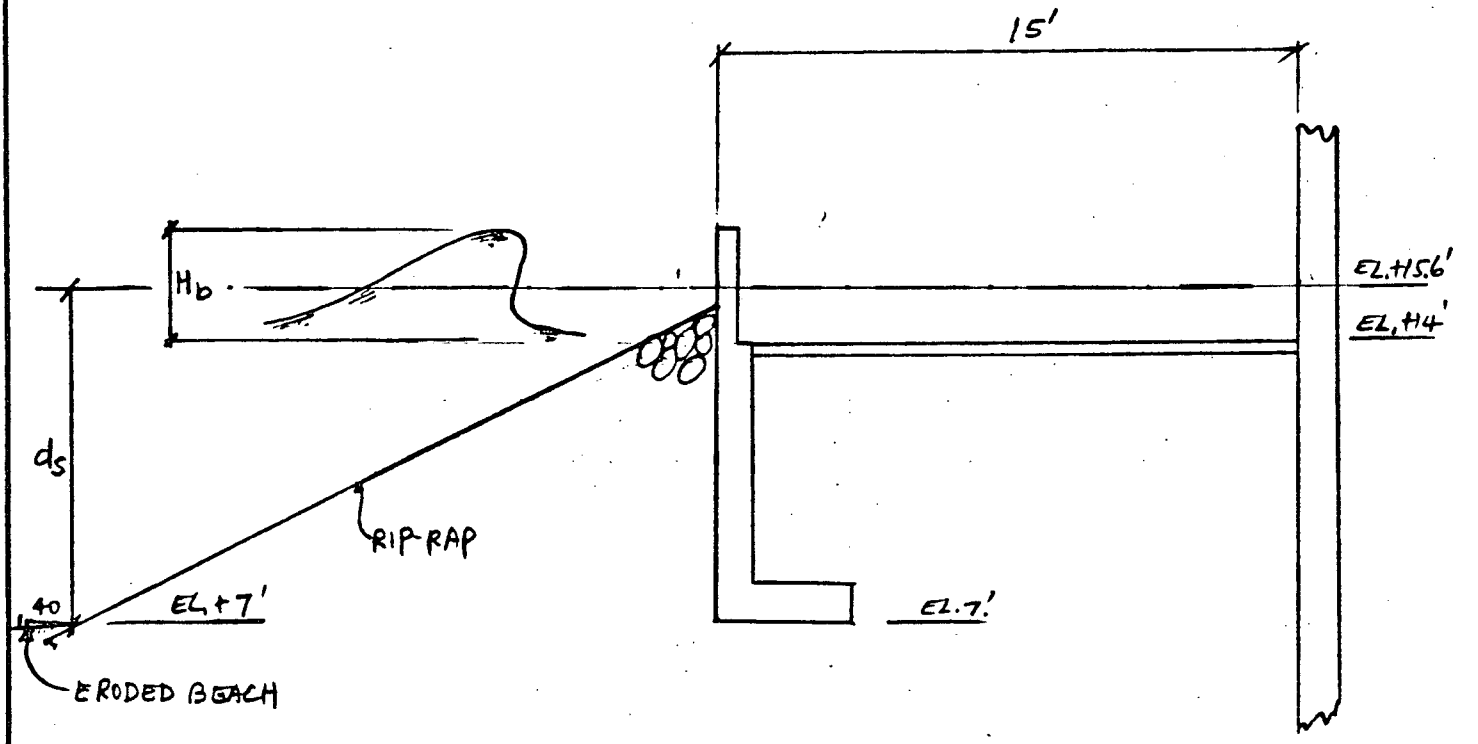

WAVE HEIGHT, H_b, FOR IMPACT FORCE.

$d_s = 15.6 - 7 = 8.6'$ @ rip-rap

$\frac{d_s}{T^2} = \frac{8.6}{4^2} = 0.54$

for $m = 1/40 = 0.025$ & USING FIG. 7-4, VOL II, ARMY'S, "SHORE PROTECTION MANUAL".

$\frac{H_b}{d_s} = 0.78$

$H_b = 0.78(8.6) = 6.7'$ SAY 7'

DWG. NO.

ENGINEERING DEPARTMENT

CALCULATION SHEET

SUBJECT: SONGS 1 – SEAWALL DESIGN CALCULATION NO. DC ____ – ____

J.O. NO. 6307 MADE BY C. WANG DATE 6-16-81 CHK. BY TW DATE 7/8/82

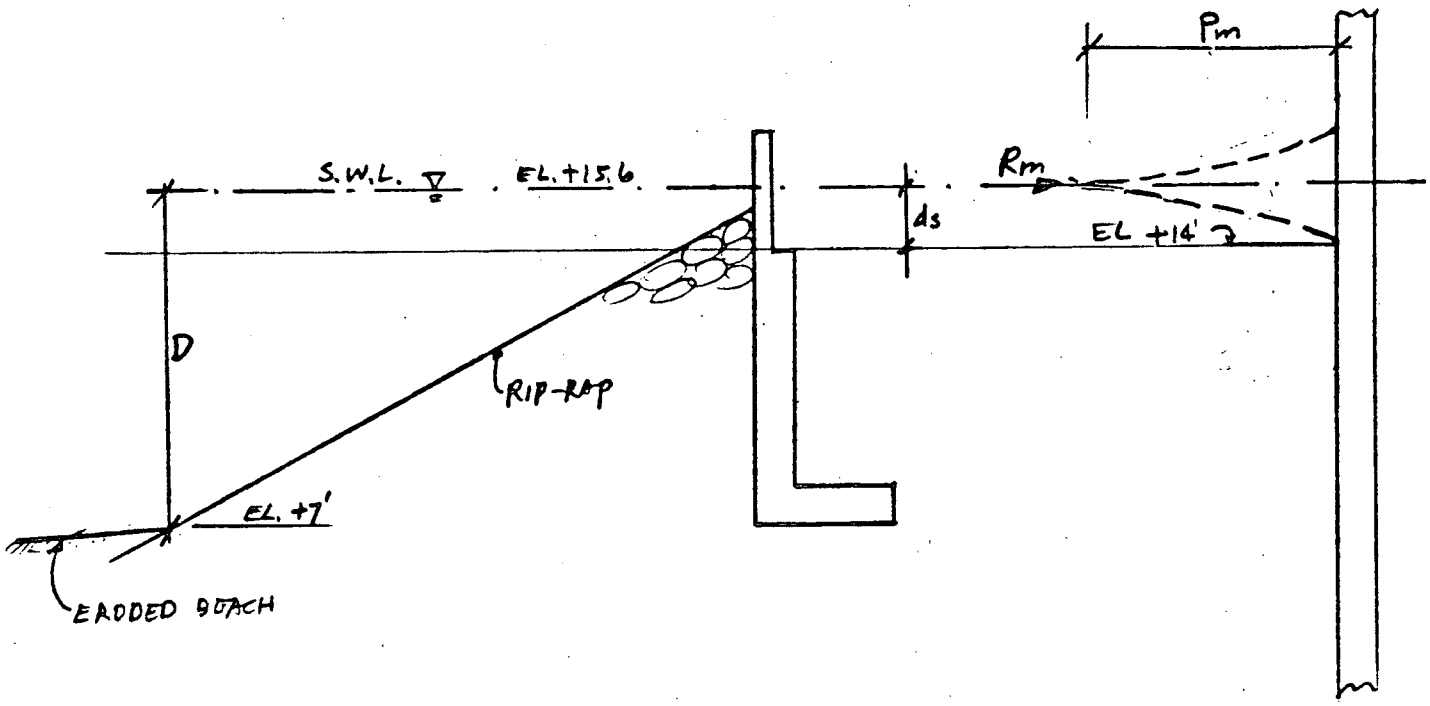

IMPACT FORCE, Rm

$d_s = 15.6 - 14 = 1.6'$ @ SEAWALL

$\frac{d_s}{D} = \frac{1.6}{8.6} = 1.9$

for $\frac{d_s}{T^2} = \frac{1.6}{4^2} = 0.1$ & USING FIG. 7-80, ARMY'S, "SHORE PROTECTION MANUAL" VOL II

$\frac{3R_m}{wH_b^2} = 3,$

$R_m = \frac{3 \times 64 \times 7^2}{3} = 3136^{\#}$ SAY $\underline{3,200^{\#}}$.

DWG. NO.

Ref. 2

SHEET 5 OF SHEETS

STATION B3

Northern Hemisphere

Sea

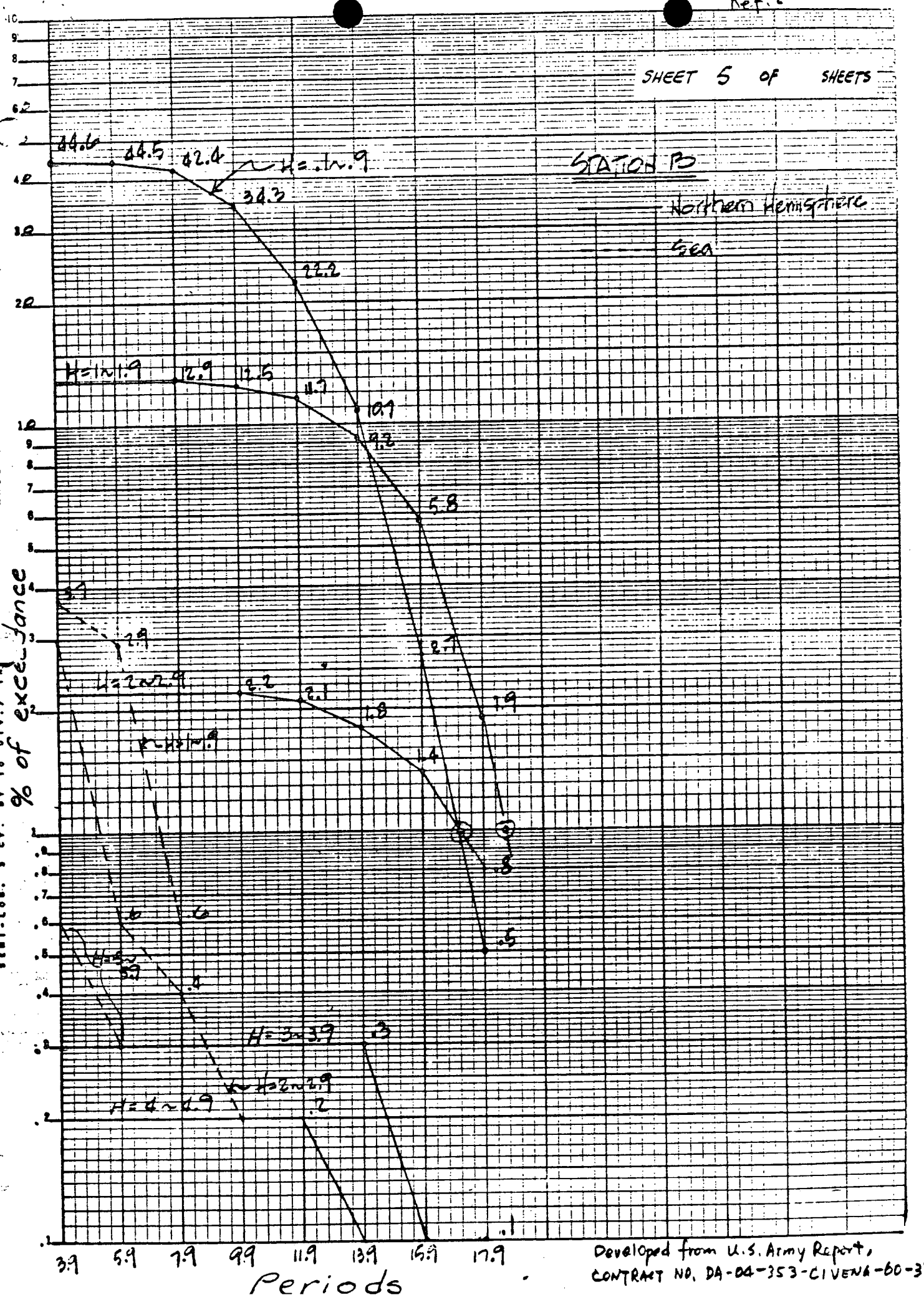

Developed from U.S. Army Report, CONTRACT NO. DA-04-353-CIVENG-60-37

Ref. 2

SHEET 6 OF SHEETS

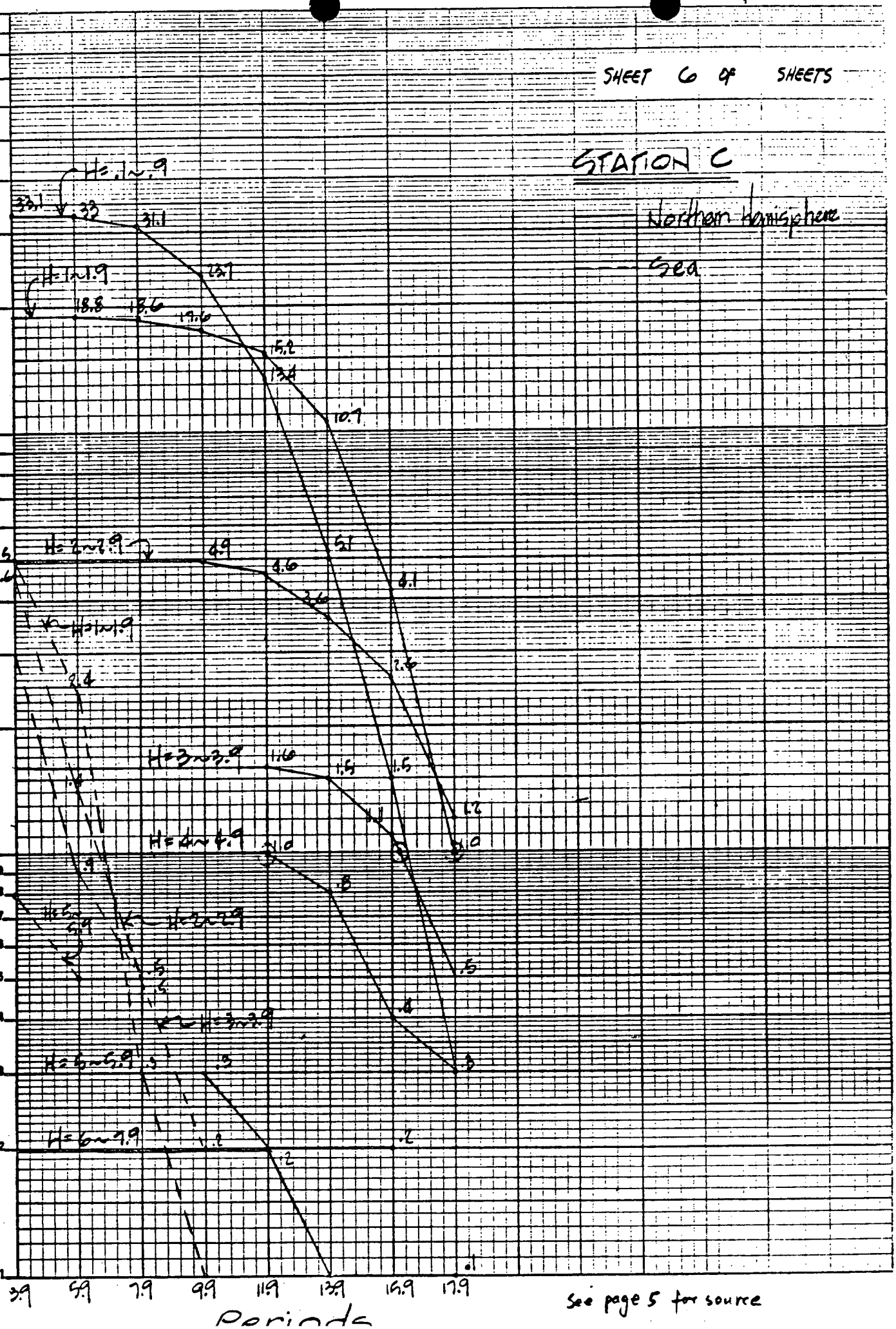

See page 5 for source

ENGINEERING DEPARTMENT

CALCULATION SHEET

SUBJECT: Seawall - SONGS 1 DESIGN CALCULATION NO. DC ____ - ____

J.O. NO. 6307 MADE BY C WANG DATE 9-14-81 CHK. BY KY DATE 12-23-81

LOAD CASE II

HYDRODYNAMIC & HYDROSTATIC LOADINGS

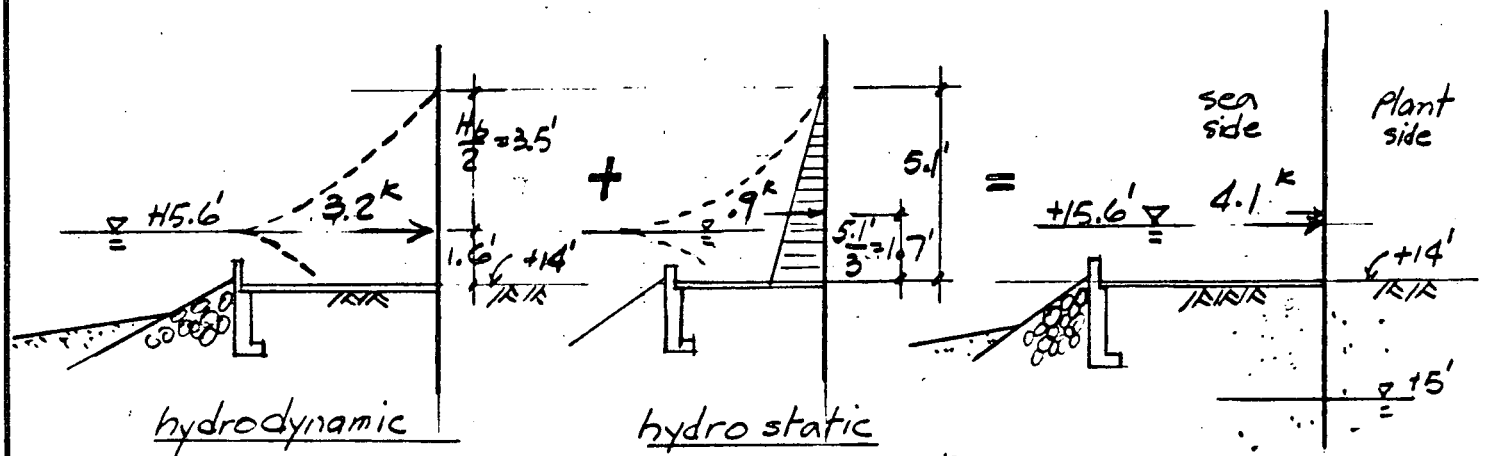

hydrodynamic

$F = 3.2^k$

hydro static

$F = .064 \times 5.1^2/2 = .9^k$

acting @ elev. +15.7'

$F_{TOTAL} = 3.2 + .9 = 4.1^k$

DWG. NO.

ENGINEERING DEPARTMENT

CALCULATION SHEET

SUBJECT: SONGS 1 — SEAWALL DESIGN CALCULATION NO. DC ____ - ____

J.O. NO. 6307 MADE BY T. WANG DATE 6/15/82 CHK. BY HYW DATE 6-29-82

LOAD CASE II — (A) —— SOIL UNDER BEACH WALKWAY NOT SATURATED

HYRODYNAMIC & HYDROSTATIC LOADINGS

$F_D = 3.2^K$ AT +15.6', (Calculated by C. Wang, 9/14/81)

$F_S = 0.9^K$ AT +15.7'

SOIL PARAMETERS (LETTER DATED 6/9/82 FROM J.N. MATHUR OF WOODWARD-CLYDE CO TO C.M. KNARR, CASE II)

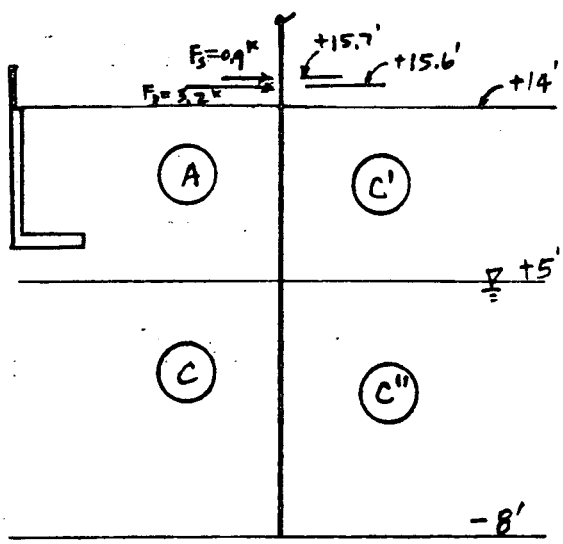

TYPE	% COMPACTION	γ (#/ft³)	K_a	K_p
A	95	120	0.21	4.8
C	85	61	0.49	2.03
C'	85	110	0.31	3.25
C''	85	61	1.0	1.0

SOIL PRESSURE

	SEA SIDE	PLANT SIDE
EL. +5	$P_{as} = 0.21 \times 9' \times 120 = 227$	$P_{ap} = 0.31 \times 9' \times 110 = 307$
	$P_{ps} = 4.8 \times 9 \times 120 = 5184$	$P_{pp} = 3.25 \times 9 \times 110 = 3218$
	$P_{ps} - P_{ap} = 5184 - 307 = 4877$	$P_{pp} - P_{as} = 3218 - 227 = 2991$
EL. -8'	$P_{as} = 0.49 \times 13 \times 61 + 227 = 616$	$P_{ap} = 1 \times 13 \times 61 + 307 = 1100$
	$P_{ps} = 2.03 \times 13 \times 61 + 5184 = 6794$	$P_{pp} = 1 \times 13 \times 61 + 3218 = 4011$
	$P_{ps} - P_{ap} = 6794 - 1100 = 5694$	$P_{pp} - P_{as} = 4011 - 616 = 3395$

DWG. NO.

ENGINEERING DEPARTMENT

CALCULATION SHEET

SUBJECT: SONGS 1 – SEAWALL DESIGN CALCULATION NO. DC ____ – ____

J.O. NO. 6307 MADE BY T. WANG DATE 6/15/82 CHK. BY HYW DATE 6-29-82

LOAD CASE II – HYDRODYNAMIC & HYDROSTATIC LOADINGS

SOIL PRESSURE DISTRIBUTION

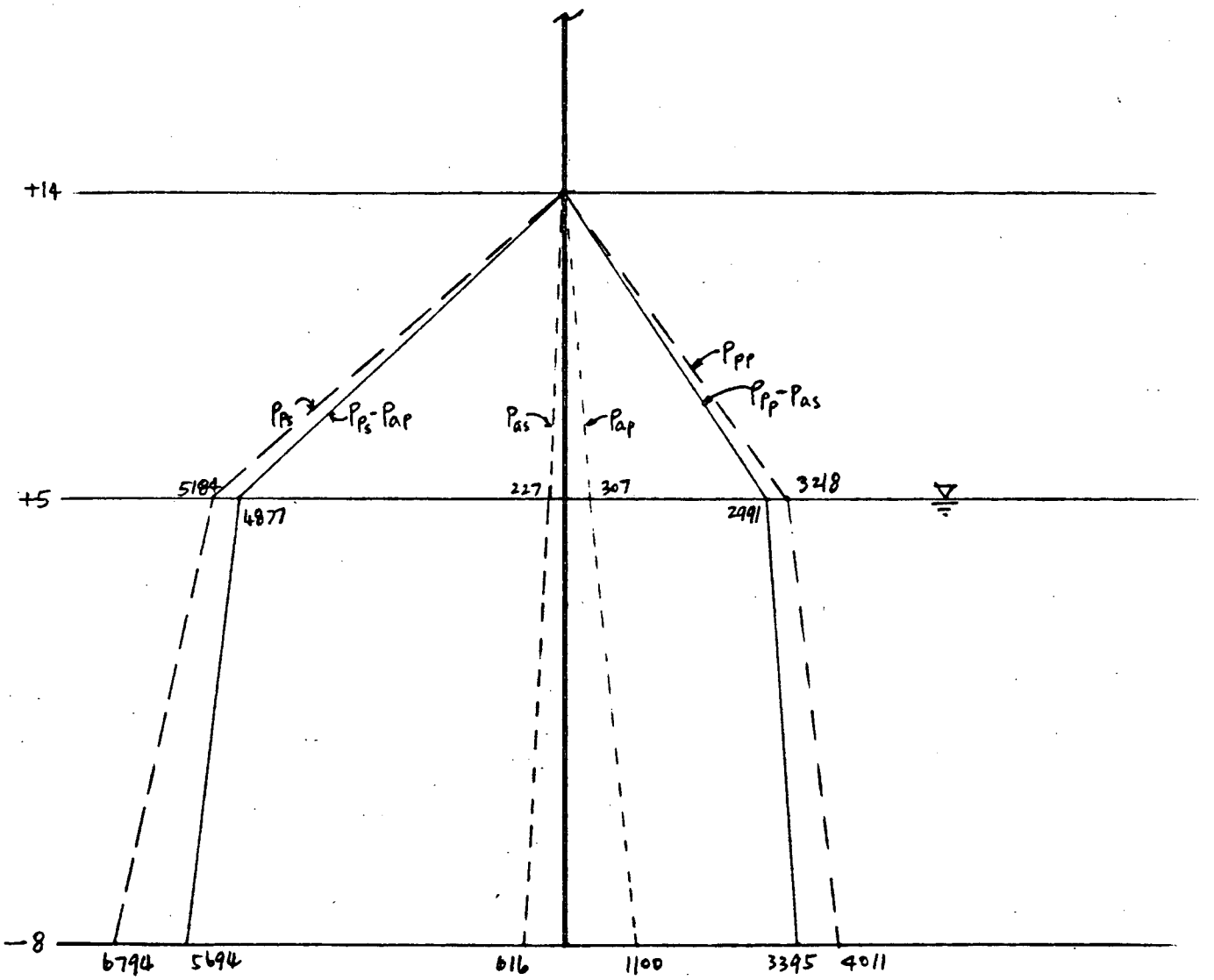

DWG. NO.

ENGINEERING DEPARTMENT

CALCULATION SHEET

SUBJECT: SONGS 1 — SGANALL DESIGN CALCULATION NO. DC ____ - ____

J.O. NO. 6307 MADE BY T. WANG DATE 6/15/82 CHK. BY Hyw DATE 6-29-82

LOAD CASE II — HYDRODYNAMIC & HYDROSTATIC LOADING

REQUIRED LENGTH OF PENETRATION

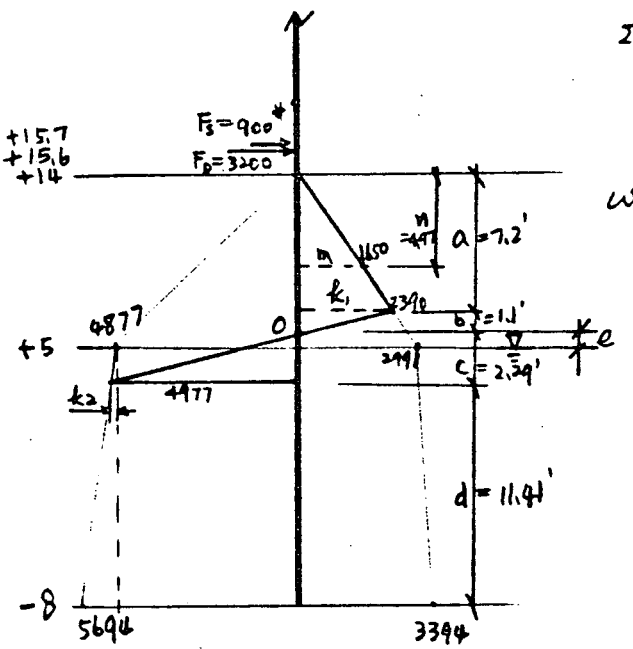

IN EQUILIBRIUM,

$$\Sigma F = 4100 - \tfrac{1}{2}(a+b)k_1 + \tfrac{1}{2}(k_2+4877)c = 0 \quad \text{— ①}$$

$$\Sigma M_o = 900(1.7+a+b) + 3200(1.6+a+b) - \frac{k_1 a}{2}\left(\frac{a}{3}+b\right) - \frac{k_1}{3}b^2 - \frac{k_2+4877}{3}c^2 = 0 \quad \text{— ②}$$

where,

$$\frac{k_1}{a} = \frac{2991}{9}, \quad k_1 = 332a \quad \text{— ③}$$

$$\frac{b}{c} = \frac{k_1}{k_2+4877} \qquad b = \frac{c\,k_1}{k_2+4877} \quad \text{— ④}$$

$$\frac{k_2}{817} = \frac{\pm e + c}{13}, \quad k_2 = 62.85(\pm e + c)$$

$\pm(5694-4877)$

$$e = \pm[a+b-9], \quad k_2 = 62.85(a+b+c-9)$$

$$b+c = \frac{k_2 - 62.85(a-9)}{62.85} \quad \text{— ⑤}$$

Trial & Error steps:

① assume a, k_2

② calculate k_1, b, c

$a = 7.2$, $k_1 = 332(7.2) = 2390$

$k_2 = 100$

$$b = \frac{2390\,c}{100+4877} = 0.48c = 1.1$$

$$0.48c + c = \frac{100 - 62.85(7.2-9)}{62.85}, \quad c = 2.29$$

$\Sigma F = 4100 - 9919 + 5700 = -120$ (1.2% off)

$\Sigma M_o = 9000 + 31680 - 30114 - 964 - 8700 = 902$ (2.5% off)

DWG. NO.

ENGINEERING DEPARTMENT

CALCULATION SHEET

SUBJECT: SONGS 1 – SEAWALL DESIGN CALCULATION NO. DC ____ – ____

J.O. NO. 6307 MADE BY T. WANG DATE 6/16/82 CHK. BY Hyun DATE 6-29-82

LOAD CASE II – HYDRODYNAMIC & HYDROSTATIC LOADING

FACTOR OF SAFETY ON STABILITY

ACCORDING TO USS, "STEEL SHEET PILING DESIGN MANUAL", PG. 21,

F.S. = 1.5 → 2.0 IF DEPTH OF PENETRATION INCREASED BY 20% → 40%.

THIS CASE, $\frac{d}{a+b+c} = \frac{11.41}{7.2+1.1+2.29} = \frac{11.41}{10.59} = 1.077$

i.e. depth increased by 107.7%

Approximately, $\underline{F.S.} = 1.5 + \frac{2.0-1.5}{40-20}(107.7-20) = \underline{3.7} > 1.1$

POINT OF ZERO SHEAR FOR REQUIRED DEPTH

$\Sigma F_x = 4100 - 0.5\,mn = 0$

$mn = 8200$

$\frac{m}{2390} = \frac{n}{7.2}, \quad m = 332\,n$

$332\,n^2 = 8200$

$n = 4.97, \quad m = 1650$

BENDING STRESS FOR REQUIRED DEPTH U.S. STEEL MZ27, $S = 30.2\ in^3/ft$, $F_b = 25\ ksi$

$M = 900(6.67) + 3200(6.57) - 0.5(4.97)(1650)(\frac{4.97}{3})$

$= 6003 + 21024 - 6793$

$= 20{,}234\ '^{\#}$

$f_b = \frac{20{,}234 \times 12}{30.2} = \underline{8.04\ ksi} < F_b = 1.6 \times 25 = 40\ ksi$ (O.K.)

DWG. NO.

ENGINEERING DEPARTMENT

CALCULATION SHEET

SUBJECT: SONGS 1 — SEAWALL DESIGN CALCULATION NO. DC ____ - ____

J.O. NO. 6307 MADE BY T. Wang DATE 6/30/82 CHK. BY HYW DATE 7-2-82

LOAD CASE II -(B) — SOIL UNDER BEACH WALKWAY SATURATED

HYDRODYNAMIC & HYDROSTATIC LOADINGS

$F_D = 3.2^K$ AT +15.6' (Calculated by C. Wang, 9/14/81)

$F_S = 0.9^K$ AT +15.7'

SOIL PARAMETERS (LETTER DATED 6/9/82 FROM J.N. MATHUR OF WOODWARD-CLYDE CO. TO C.M. KNARR & TELEPHONE NOTE DATED 6/30/82 BETWEEN T.Y. WANG & J.N. MATHUR OF W-C C.)

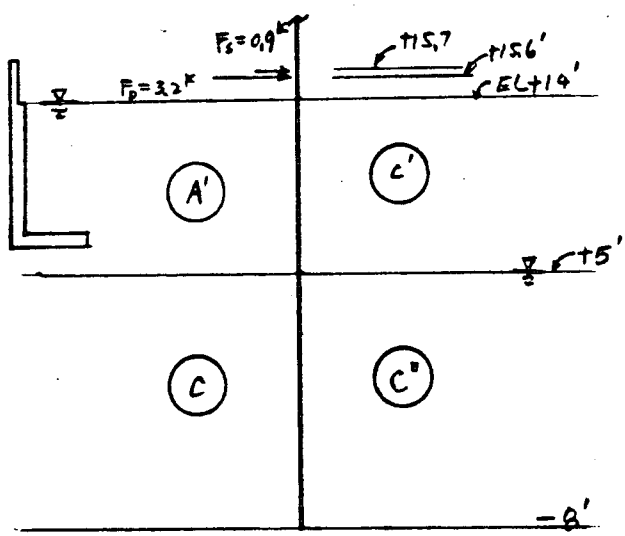

TYPE	% COMPACTION	γ (#/ft³)	Ka	Kp
A'	95	66	0.21	4.8
C	85	61	0.49	2.03
C'	85	110	0.31	3.25
C"	85	61	1.0	1.0
Water		64		

SOIL PRESSURE

	SEA SIDE	PLANT SIDE
EL. +5'	$P_w = 9' \times 64 = 576$	$P_{ap} = 0.31 \times 9' \times 110 = 307$
	$P_{as} = 0.21 \times 9 \times 66 = 125$; $P_w + P_{as} = 701$	$P_{pp} = 3.25 \times 9 \times 110 = 3218$
	$P_{ps} = 4.8 \times 9 \times 66 = 2851$	$P_{pp} - (P_{as} + P_w) = 3218 - 701 = 2517$
	$P_{ps} - P_{ap} = 2851 - 307 = 2544$	
EL. -8'	$P_{as} = 0.49 \times 13 \times 61 + 701 = 1090$	$P_{ap} = 1 \times 13 \times 61 + 307 = 1100$
	$P_{ps} = 2.03 \times 13 \times 61 + 2851 = 4461$	$P_{pp} = 1 \times 13 \times 61 + 3218 = 4011$
	$P_{ps} - P_{ap} = 4461 - 1100 = 3361$	$P_{pp} - P_{as} = 4011 - 1090 = 2921$

DWG. NO.

ENGINEERING DEPARTMENT

CALCULATION SHEET

SUBJECT: SONUS 1 — SEAWALL DESIGN CALCULATION NO. DC ____ — ____

J.O. NO. 6307 MADE BY T. Wang DATE 6/30/82 CHK. BY HYM DATE 7-2-82

LOAD CASE II -(B)

SOIL PRESSURE DISTRIBUTION

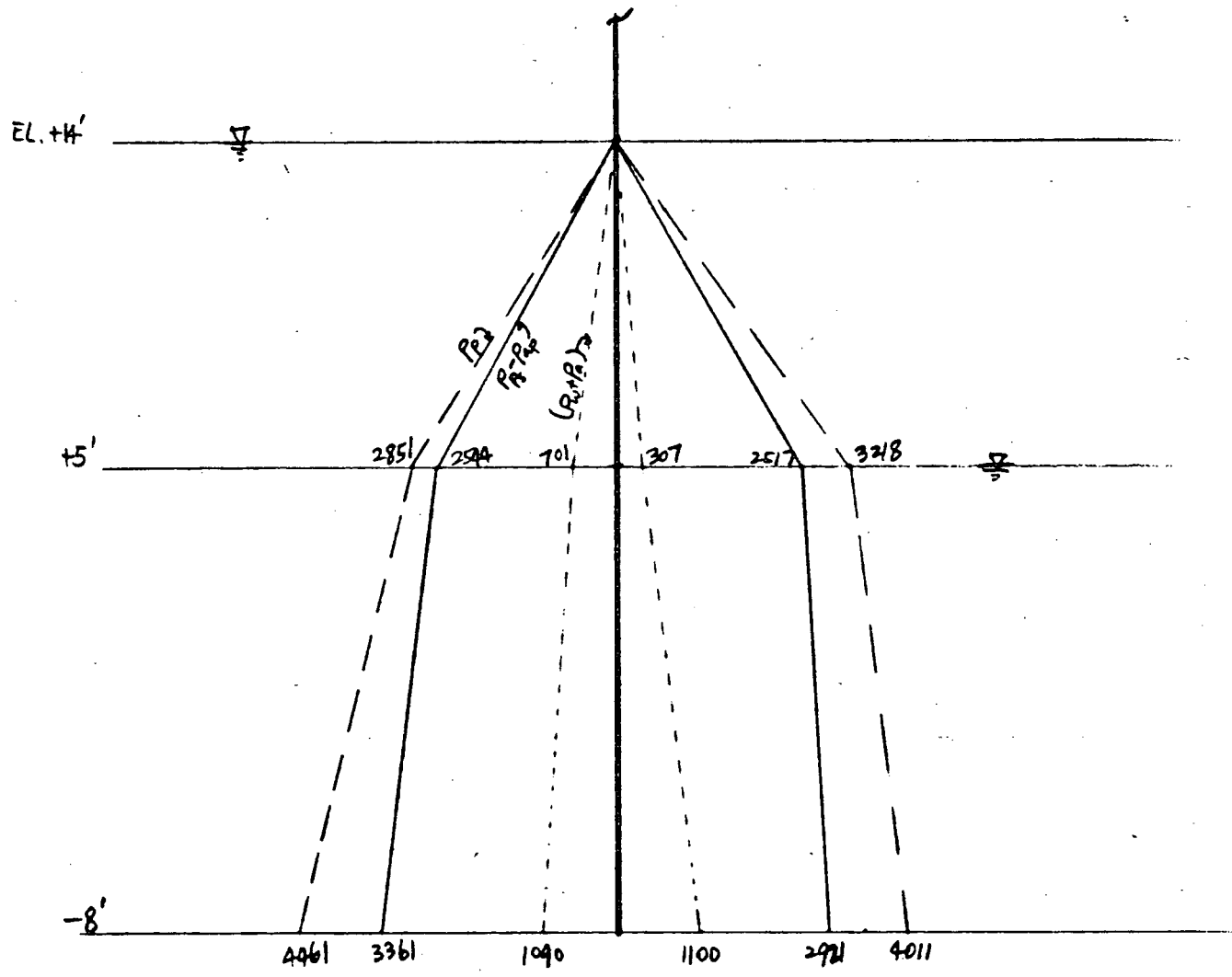

DWG. NO.

ENGINEERING DEPARTMENT

CALCULATION SHEET

SUBJECT: SONGS 1 — SEAWALL DESIGN CALCULATION NO. DC ____ - ____

J.O. NO. 6307 MADE BY T. Wang DATE 6/30/82 CHK. BY Hyn DATE 7-2-82

LOAD CASE II — (B)

REQUIRED LENGTH OF PENETRATION

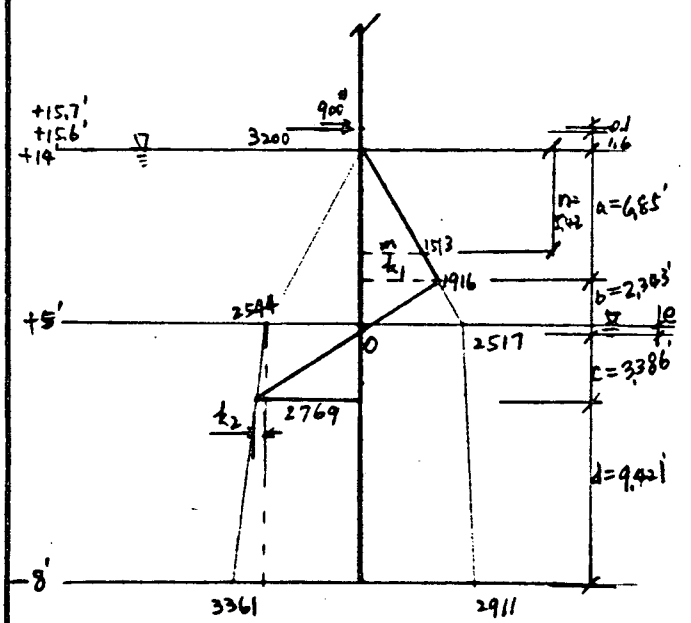

IN EQUILIBRIUM,

$$\Sigma F = 4100 - \tfrac{1}{2}(a+b)k_1 + \tfrac{1}{2}(k_2+2544)c = 0 \quad \text{— (1)}$$

$$\Sigma M_o = 900(1.7+a+b) + 3200(1.6+a+b) - \frac{k_1 a}{2}\left(\frac{a}{3}+b\right) - \frac{k_1}{3}b^2 - \frac{k_2+2544}{3}c^2 = 0 \quad \text{— (2)}$$

WHERE,

$$\frac{k_1}{a} = \frac{2517}{9}, \quad k_1 = 279.67a \quad \text{— (3)}$$

$$\frac{b}{c} = \frac{k_1}{k_2+2544}, \quad b = \frac{c\,k_1}{k_2+2544} \quad \text{— (4)}$$

$$\frac{k_2}{3361-2544} = \frac{c+e}{13}, \quad k_2 = 62.85(c+e)$$

$$e = a+b-9, \quad k_2 = 62.85(a+b+c-9)$$

$$b+c = \frac{k_2 - 62.85(a-9)}{62.85} \quad \text{— (5)}$$

TRIAL & ERROR STEPS:

(1) ASSUME a, k_2,

(2) Calculate k_1, b, c

$a = 6.85$, $k_1 = 279.67(6.85) = 1916$

$k_2 = 225$

$$b = \frac{1916\,c}{225+2544} = 0.692c = 2.343$$

$$b+c = \frac{225-62.85(6.85-9)}{62.85}, \quad c = 3.386$$

$\Sigma F = 4100 - 8807 + 4688 = -19$ (0.2% off)

$\Sigma M_o = 9804 + 34538 - 30359 - 3506 - 10582 = -105$ (0.2% off)

DWG. NO.

ENGINEERING DEPARTMENT

CALCULATION SHEET

SUBJECT: SONGS 1 – SEAWALL DESIGN CALCULATION NO. DC ____ – ____

J.O. NO. 6307 MADE BY T. Wang DATE 7/1/82 CHK. BY HYW DATE 7/28/82

LOAD CASE II – (B)

FACTOR OF SAFETY ON STABILITY

ACCORDING TO USS, "STEEL SHEET PILING DESIGN MANUAL", pg. 21,

F.S. = 1.5 → 2.0 if DEPTH OF PENETRATION INCREASED BY 20% → 40%

THIS CASE, $\frac{d}{a+b+c} = \frac{9.421}{6.85+2.343+3.386} = 0.74$

i.e. DEPTH INCREASED BY 74%

APPROXIMATELY, $F.S. = 1.5 + \frac{2.0-1.5}{40-20}(74-20) = \underline{2.85} > 1.1$

POINT OF ZERO SHEAR FOR REQUIRED DEPTH

$\Sigma F_x = 4100 - 0.5\,mn = 0$

$mn = 8200$

$\frac{m}{1916} = \frac{n}{6.85}$, $m = 279.67\,n$

$279.67\,n^2 = 8200$

$n = 5.42$, $m = 1513$

BENDING STRESS FOR REQUIRED DEPTH U.S. STEEL M 27, $S = 30.2\ in^3/ft$, $F_b = 25\ ksi$

$M = 900(1.7+5.42) + 3200(1.6+5.42) - 0.5(5.42)(1513)\left(\frac{5.42}{3}\right)$

$= 6408 + 22464 - 7408 = 21464\ '\#$

$= 21.464\ '^K$

$f_b = \frac{21.464 \times 12}{30.2} = \underline{8.53}\ ksi < 1.6 \times F_b$ (O.K.)

DWG. NO.

ENGINEERING DEPARTMENT
CALCULATION SHEET

SONGS I
SUBJECT: SEAWALL - OFFSHORE PROTECTIONS DESIGN CALCULATION NO. DC -

J.O. NO. 6307 MADE BY K. D. Tucker DATE 7/14/82 CHK. BY [signature] DATE 7/15/82

The existing seawall near SONGS-Unit 1 consists of steel sheet pile driven to a tip depth of Elev. -18' MLLW and extends above grade to Elev. +28.2'. The material in front of the seawall is comprised of compacted sand fill and rip-rap materials resting on the native San Mateo sand at Elev. 0 MLLW. The depth of compacted fill is approximately 14' with a 2½" thick asphalt walkway located at Elev. +14'. The walkway is 15' wide with a concrete retaining wall placed between it and the beach. Compacted rip-rap materials have been placed in front of the retaining wall at a 2:1 slope (hor. to vert.) with the toe lying 20 feet beyond the wall and approximately 5 feet below the existing ground surface. Native beach sand is at the ground surface (+11' MLLW) and slopes gently (40:1) towards the ocean. During DBE conditions, the beach sand is assumed to erode with a post DBE ground surface at Elev. +7' MLLW (approximately 2' above the toe of the rip-rap). Thus, the rip-rap slope in front of the concrete retaining wall will be 8 feet high for post DBE conditions. The dynamic performance of the rip-rap will be

DWG. NO.

ENGINEERING DEPARTMENT
CALCULATION SHEET

SUBJECT: DESIGN CALCULATION NO. DC

J.O. NO. MADE BY K.D. TUCKER DATE 7/14/82 CHK. BY DATE 7/15/82

analyzed so that the stability of the walkway adjacent to the steel sheet pile wall may be evaluated during and after DBE conditions.

ANALYSIS OF RIP-RAP SLOPE

With the 2:1 slope, α = Slope Angle = 26.6°, rip-rap of 1000–1500 lbs,

Assume :- $\gamma_{rip\text{-}rap} = 125\,pcf \Rightarrow$ Volume $= \frac{1250\,lb}{125\,pcf} = 10\,ft^3 = \frac{4}{3}\pi \cdot R^3$ (for sphere)

$R^3 = (10\,ft^3)\frac{3}{4\pi} = 2.39\,ft^3 \Rightarrow R = 1.3$ feet $\Rightarrow D = 2.6\,ft$

$D = 32''$

- $\phi_{rip\text{-}rap} = 48° - 58°$ from Leps, T.M., "Review of Shearing Strength of Rockfill", Journal of the Soil Mechanics & Fdn. Div., July, 1970.
(for $\sigma_N = 2\,psi$)

- From Newmark, N.M., "Effects of Earthquakes on Dams and Embankments", Geotechnique 15: 140–141, 156, 1965;

Minimum Dynamic Resistance $= N = \sin(\phi - \alpha)$

① With $\alpha = 26.6°$, $\phi = 48°$, $N = \sin(21.4°) = 0.365$

② With $\alpha = 26.6°$, $\phi = 58°$, $N = \sin(31.4°) = 0.521$

Design Base Earthquake $= \frac{2}{3}g = 0.67g = A$ and $V = 31$ in/sec

When $N/A < 1.0$, the slope will incur displacements.

① With $\phi = 48°$, $N = 0.365$, $A = 0.67$, $N/A_1 = 0.547$, $A/N_1 = 1.827$,

$$\text{Displacement} = \frac{V^2}{2 \cdot g \cdot N} \cdot \frac{A}{N} = \frac{(31\,in/sec)^2}{2(32\,ft/sec^2)(.365)(12\,in/ft)}(1.827)$$

$\delta = 6.3$ inches $= 0.52\,ft$ (for $\phi = 48°$)

DWG. NO.

ENGINEERING DEPARTMENT
CALCULATION SHEET

SUBJECT: DESIGN CALCULATION NO. DC -

J.O. NO. MADE BY K. D. Tucker DATE 7/14/82 CHK. BY [illegible] DATE 7/15/82

(2) With $\phi = 58°$, $N = 0.521$, $A = 0.67$, $N/A_2 = 0.781$, $A/N_2 = 1.28$,

$$\text{Displacement} = \frac{V^2}{2g \cdot N}(1 - N/A)(A/N) = \frac{(31\ in/sec)^2(1\ ft/12")}{2(32\ ft/sec^2)(0.521)}\left[1-(0.781)\right](1.28)$$

$$\delta = 0.7 \text{ inches} = 0.06 ft \quad (\text{for } \phi = 58°)$$

Since $N/A < 1.0$, displacements from ½-6 inches may occur during DBE conditions. Since these displacements are less than the radius of a piece of rip-rap, then the surficial pieces should not tumble down the slope.

ANALYSIS OF RIP-RAP SECTION

- From NAVFAC DM-7, "Design Manual for Soil Mechanics, Foundations and Earth Structures", Dept of the Navy, March, 1971,

With $\phi = 47°$, $C = 50 psf$, $\gamma = 125 pcf$, $H = 8'$, β = Slope Angle = 26.6°,

$$\lambda_{c\phi} = \frac{\gamma \cdot H(\tan\phi)}{C} = \frac{(125 pcf)(8')(1.072)}{50 psf} = 21.4 \Rightarrow N_{c\phi} \cong 50 \text{ [Figure 7.4]}$$

$$F.S. = \frac{N_{c\phi} \cdot C}{\gamma \cdot H} = \frac{50(50 psf)}{(125 pcf)(8 ft)} = \frac{2500 psf}{1000 psf} = 2.5$$

Thus, for static conditions, the slope is stable.

Using Fig. 7.4, $y_0 = 2.1$ and $X_0 = 0.3$ and $Y_0 = y_0 \cdot H = (2.1)(8') = 16.8'$

$X_0 = x_0 \cdot H = (0.3)(8') = 2.4'$

DWG. NO.

ENGINEERING DEPARTMENT

CALCULATION SHEET

SUBJECT: DESIGN CALCULATION NO. DC

J.O. NO. MADE BY K. D. TUCKER DATE 7/14/82 CHK. BY DATE 7/15/82

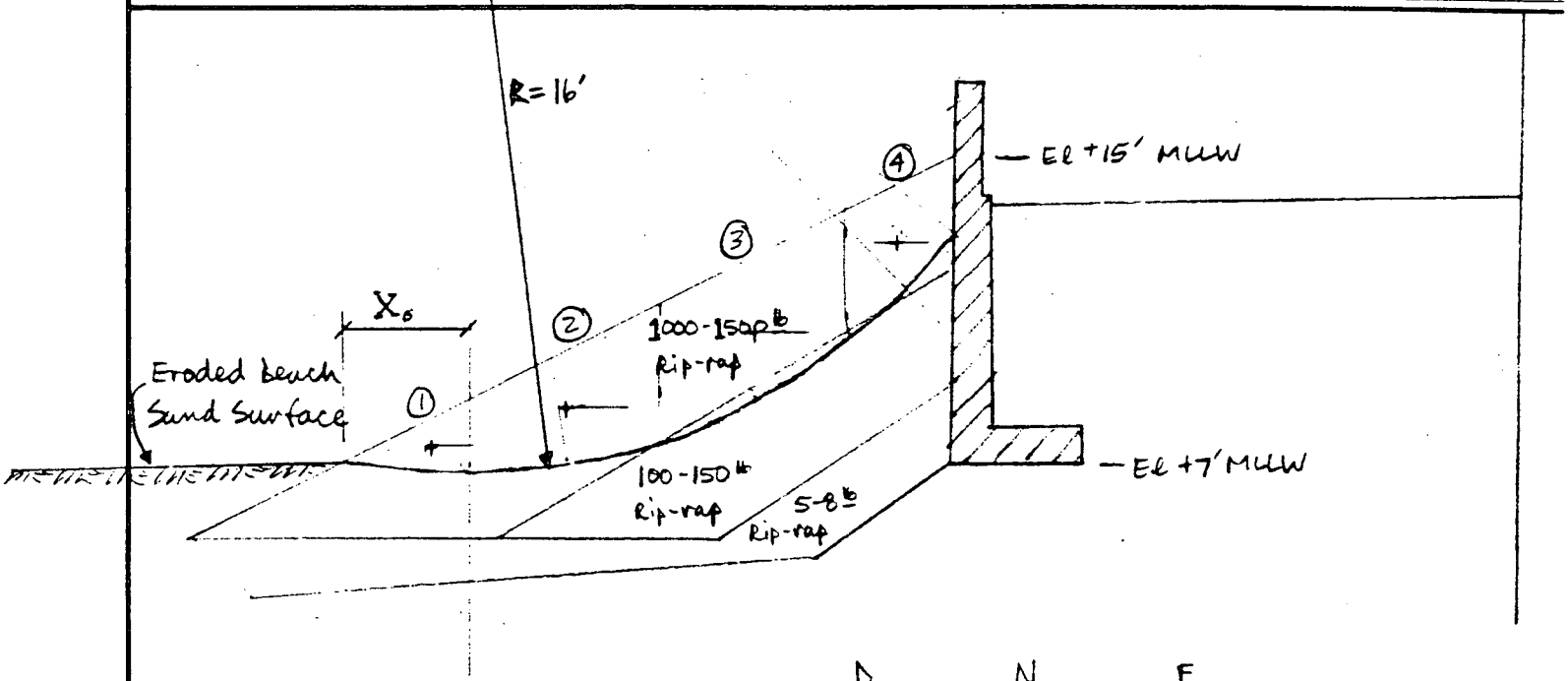

Slice	Area (ft²)	γ (pcf)	Weight (lb/ft)	α Degrees	D = W·sin α (lb/ft)	N = W·cos α (lb/ft)	F = N·tan φ (lb/ft)
1	½(3)(2)	125	375	-6°	-39.2	372.9	399.9
2	(3)(5)	125	1875	+9°	293.3	1851.9	1985.9
3	(4)(5)	125	2500	+28°	1173.7	2207.4	2367.1
4	(3)(3)	125	1125	+45°	795.5	795.5	853.1
					Σ = 2223.3 lb/ft		Σ = 5606 lb/ft

$$\text{Static Factor of Safety} = \frac{\Sigma N \cdot \tan\phi + c\hat{\ell}}{\Sigma W \cdot \sin\alpha} = \frac{5606\ \text{lb/ft} + 0}{2223.3\ \text{lb/ft}} = 2.52 \leftarrow$$

[Assuming $\phi = 47°$, $c = 0$, Water surface below sliding surface during DBE loading conditions through upper rip-rap layer.]

DWG. NO.

ENGINEERING DEPARTMENT

CALCULATION SHEET

SUBJECT: DESIGN CALCULATION NO. DC

J.O. NO. MADE BY K. D. Tucker DATE 7/14/82 CHK. BY DATE 7/15/82

For dynamic forces, through the centroid of each slice,

Slice	W (lb/ft)	a·W* (lb/ft)	r' (ft)	a·W·r' (lb)
1	375	250	15.5'	3875
2	1875	1250	14.5'	18,125
3	2500	1667	12.5'	20,833
4	1125	750	10.0'	7,500

$\Sigma = 50,333$ lb

* $a = 2/3\,g$ for DBE conditions

aW = Pseudo static force

$$\text{Dynamic F.S.} = \frac{R \cdot \Sigma N \cdot \tan\phi + c\hat{\ell}}{(W \cdot \sin\alpha)R + (a \cdot W)r'} = \frac{16'[5606 + 0]}{35,573 + 50,333} = \frac{89,696}{85,906^{\#}} = 1.04$$

[Assuming $\phi = 47°$, $c = 0$, Water surface below sliding surface during DBE loading conditions through upper rip-rap layer.]

DWG. NO.

ENGINEERING DEPARTMENT
CALCULATION SHEET

SUBJECT: DESIGN CALCULATION NO. DC

J.O. NO. MADE BY K. D. TUCKER DATE 7/14/82 CHK. BY DATE 7/15/82

CONCLUSIONS

From the rip-rap slope analysis, surface displacements from 1/2 to 6 inches may occur without any of the large boulders rolling down the slope. A circular failure surface was evaluated and found to be stable using lower bound strength parameters. Hence, only surficial slope movements should occur during DBE loading conditions. The integrity of the reinforced concrete retaining wall should not be effected and will provide lateral support for the asphalt walkway. The steel sheet pile wall will have lateral soil resistance from the existing ground surface, Elev. +14 MLLW, to it's tip near Elev. -18 MLLW. Hence, the existing walkway and outer rip-rap slope should be stable during DBE conditions with minor movements of rip-rap materials along its 2:1 slope.

DWG. NO.

SONGS – UNIT 1 SEAWALL EVALUATION

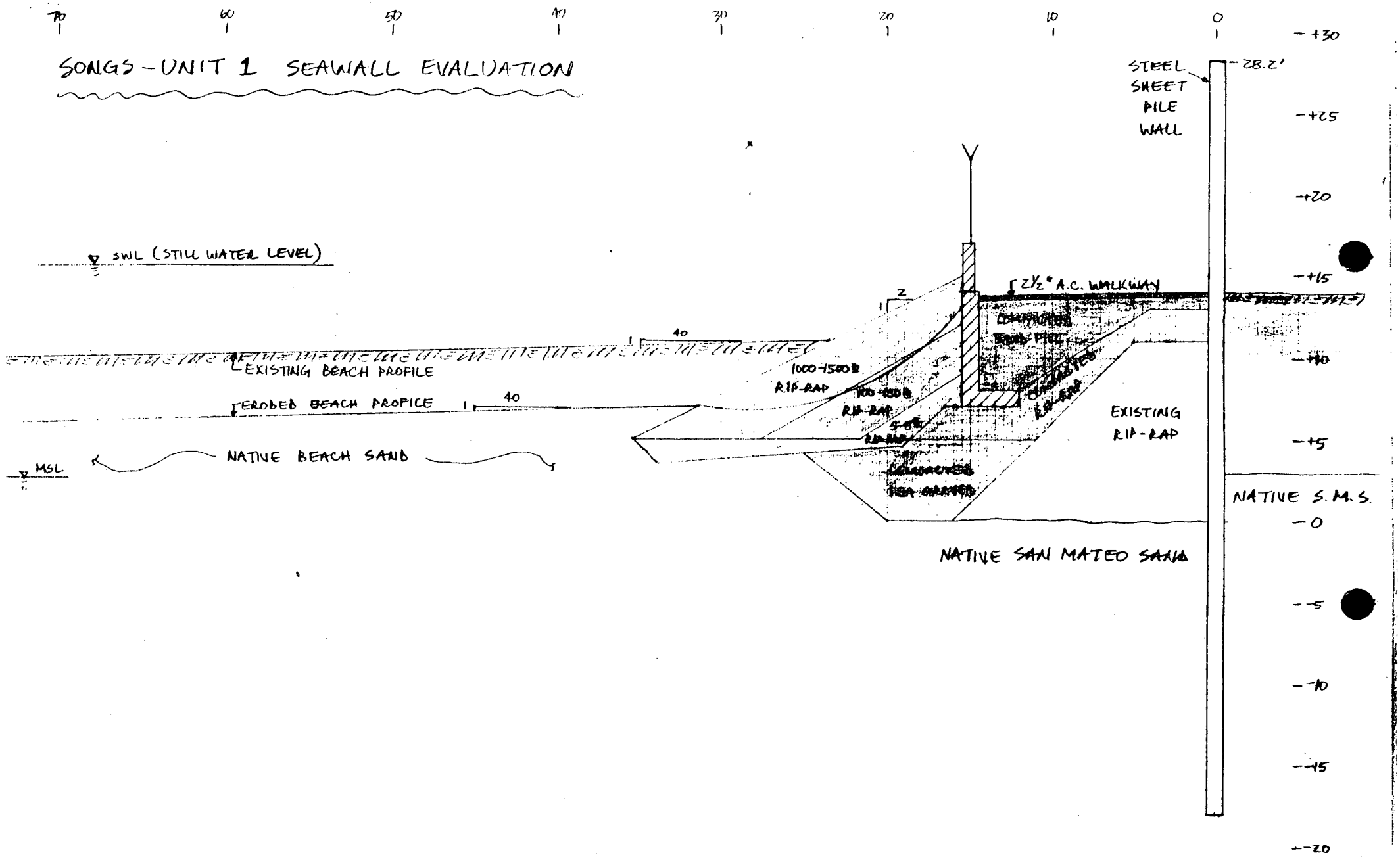

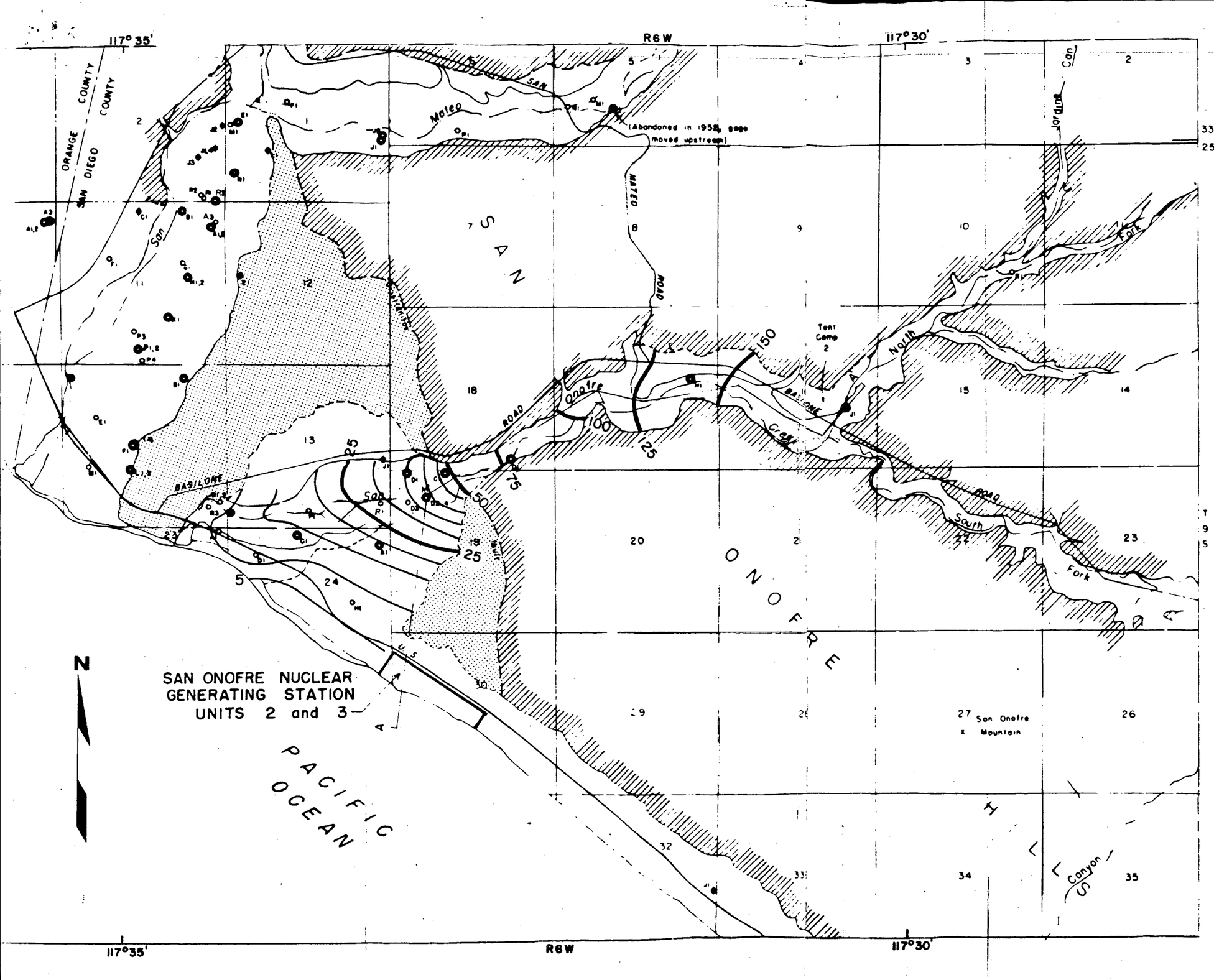

EXPLANATION

- Permeable formation
- Semi-impermeable formation
- Boundary of impermeable formation
- R1 Camp supply or irrigation well
- R2 Domestic, stock, or unused well
- N2 Destroyed or dry well
- Stream-gaging station
- Ground-water contour March 1952 (5 foot interval)
- A Location of cross section

Docket # 50-206
Control # 8209170106
Date 09/13/82 of Document:
REGULATORY DOCKET FILE

REGULATORY DOCKET FILE COPY

SCALE: 1 = 36000
DATUM IS MEAN SEA LEVEL

1000 0 1000 3000 5000 FEET

500 0 500 1000 1500 METERS

COMPILED FROM: G. F. WORTS ET AL., 1953
R. F. BOSS ET AL, 1958

SAN ONOFRE NUCLEAR GENERATING STATION Units 2 & 3

GROUNDWATER CONTOUR MAP
SAN ONOFRE VALLEY BASIN
TYPICAL HIGH-WATER CONDITION

Figure 2.4-27

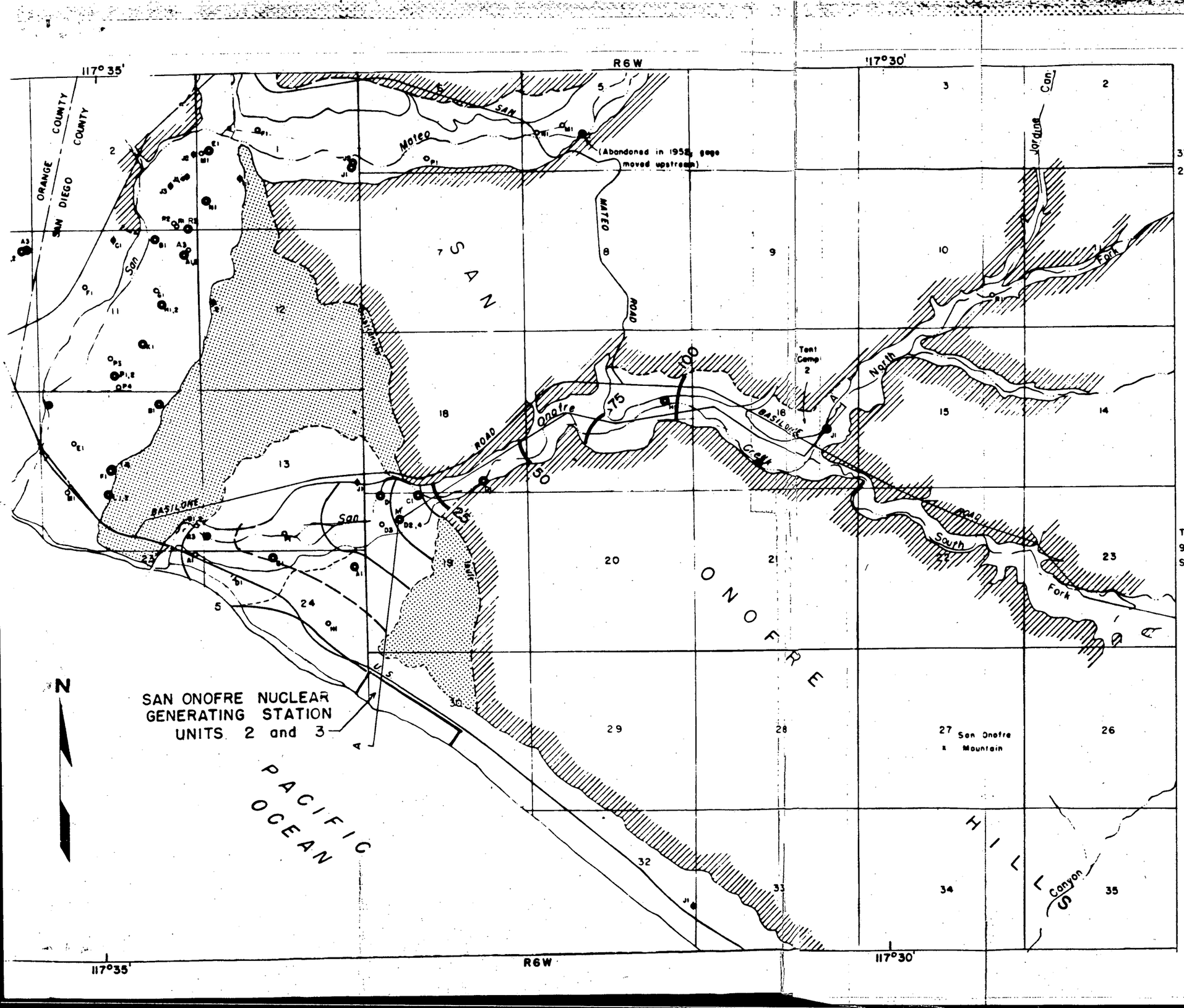

EXPLANATION

- Permeable formation
- Semi-impermeable formation
- Boundary of impermeable formation
- R1 — Camp supply or irrigation well
- R2 — Domestic, stock, or unused well
- N2 — Destroyed or dry well
- Stream-gaging station
- Ground-water contour, August 1951 (5 foot interval)
- A — Location of cross section

Docket # 50-206
Control # 8209170106
Date 09-13-82 of Document:
REGULATORY DOCKET FILE

REGULATORY DOCKET FILE COPY

SCALE: 1 = 36,000
DATUM IS MEAN SEA LEVEL

1000 0 1000 3000 5000 FEET

500 0 500 1000 1500 METERS

COMPILED FROM: G. F. WORTS ET AL, 1953
R. F. BOSS ET AL, 1958

SAN ONOFRE NUCLEAR GENERATING STATION Units 2 & 3

GROUNDWATER CONTOUR MAP
SAN ONOFRE VALLEY BASIN
TYPICAL LOW-WATER CONDITION

Figure 2.4-28