UNITED STATES
NUCLEAR REGULATORY COMMISSION
WASHINGTON, D. C. 20555

SAFETY EVALUATION BY THE OFFICE OF NUCLEAR REACTOR REGULATION OF THE THERMAL SHIELD SUPPORT SYSTEM REPLACEMENT DESIGN FOR SAN ONOFRE NUCLEAR GENERATING STATION, UNIT NO. 1

RELATED TO AMENDMENT NO. 140 TO PROVISIONAL OPERATING LICENSE NO. DPR-13

SOUTHERN CALIFORNIA EDISON COMPANY

SAN DIEGO GAS AND ELECTRIC COMPANY

DOCKET NO. 50-206

December 1990

U.S. Nuclear Regulatory Commission

SAFETY EVALUATION
OF THE THERMAL SHIELD SUPPORT SYSTEM
REPLACEMENT DESIGN
FOR SAN ONOFRE NUCLEAR GENERATING STATION, UNIT NO. 1
DOCKET NO. 50-206

TABLE OF CONTENTS

Page

SAFETY EVALUATION
OF THE THERMAL SHIELD SUPPORT SYSTEM REPLACEMENT DESIGN
FOR SAN ONOFRE NUCLEAR GENERATING STATION, UNIT NO. 1
DOCKET NO. 50-206

1.0 INTRODUCTION

By letter dated April 20, 1990, Southern California Edison Company (SCE or the licensee) submitted Amendment Application No. 181 which consisted of Proposed Change No. (PCN) 222 to Provisional Operating License No. DPR-13 for the San Onofre Nuclear Generating Station, Unit No. 1 (SONGS-1), located in San Diego County, California. The amendment application requested NRC approval of: 1) a proposed design change for the SONGS-1 thermal shield support system, and 2) a revision to License Condition 3.M to continue the thermal shield monitoring program for Cycle 11 operation. The licensee's request was supplemented by letters dated May 24, June 8, July 7, July 12, July 27, August 28, August 31, October 19, and by two letters dated November 29, 1990.

The submittal of PCN-222 was the latest in a series of SCE actions in response to continuing problems related to degradation of and damage to the SONGS-1 thermal shield support system. The cause of these problems has been attributed to flow-induced vibration (FIV) of the thermal shield. Continuing problems of this type are not unique to SONGS-1, but are known to have chronically affected pressurized water reactors (PWRs) designed by all domestic nuclear steam supply system (NSSS) vendors as well as PWRs designed abroad. The design change for the SONGS-1 thermal shield support system that was requested by PCN-222 was based on lessons learned from SCE's experience with previous SONGS-1 thermal shield support system problems and from related experience from another Westinghouse Electric Co. (W) PWR of similar design (W type 2) and length of commercial operating time (i.e., the Connecticut Yankee Atomic Power Co. (CY) Haddam Neck plant).

"Figure 1"

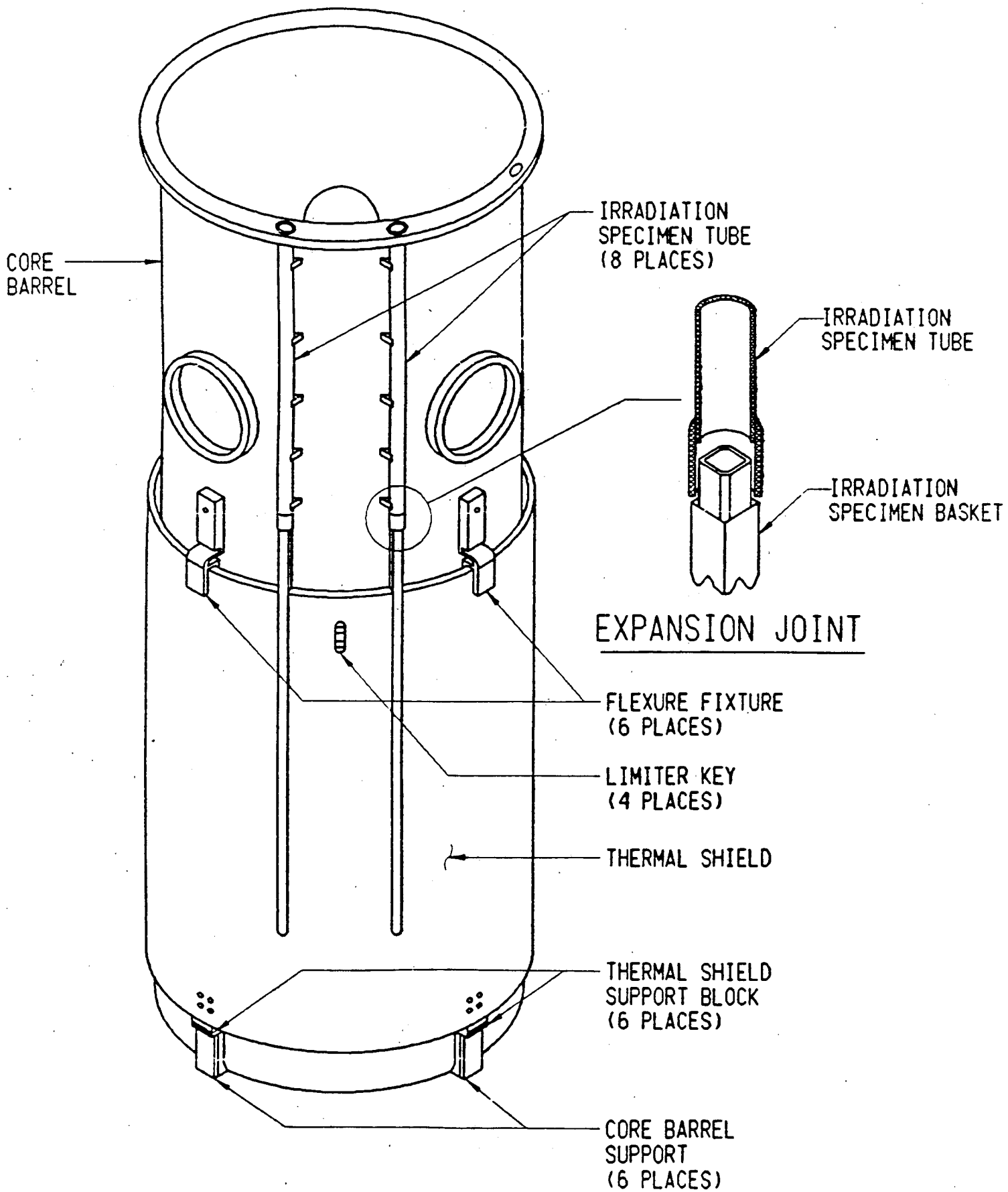

ISOMETRIC VIEW - CORE BARREL & THERMAL SHIELD

The thermal shield support systems in the SONGS-1 and Haddam Neck plants are of similar design (See Figure 1). In this design, the thermal shield is supported by the reactor core barrel. Components of the support system are: (1) six "flexure" supports attached to the upper edge of the thermal shield, (2) four displacement limiter keys near the upper edge of the thermal shield, and (3) six support blocks attached to the lower edge of the thermal shield. Although of similar design, due to the difference in plant sizes, there are differences in the size and location of the support system components used in the SONGS-1 versus the Haddam Neck plant as well as in the number, size, and location of the fasteners for the various components.

Previously, as part of a SCE/W SONGS-1 thermal shield action plan developed in response to information provided by W in late 1987 that the thermal shield support system at the Haddam Neck plant had been found to be degraded, SCE visually inspected the SONGS-1 thermal shield support system in early 1989 during the Cycle 10 refueling outage. This inspection found that: (1) five of the six flexure supports were broken, (2) three of the thirty bolts in the support blocks appeared to be broken, and (3) the tack weld for one of the twenty four dowel pins in the support blocks was broken (in fact, relative to the flexure supports, this inspection found that no additional damage had occurred since the last inspection: four flexures were known to be broken since 1976 and five flexures since 1978).

SCE/W evaluations of the results of this 1989 Cycle 10 refueling outage inspection concluded that the SONGS-1 thermal shield support system was not as severely degraded as observed in the Haddam Neck plant and repair of the SONGS-1 thermal shield support system could be deferred until the end of the next operating cycle. The SCE/W evaluations concluded that SONGS-1 could safely operate through Cycle 10 without being impacted by continued degradation of the thermal shield support system.

SONGS-1 was returned to service in late July 1989. However, as a condition of continued operation, the NRC required that a program to monitor the condition of the thermal shield support system be implemented. Accordingly, by letter dated February 17, 1989, SCE submitted Amendment Application No. 165 to

Provisional Operating License DPR-13. This Amendment Application consisted of PCN-207 which requested a revision to add License Condition 3.M, "Cycle X Thermal Shield Monitoring Program." Partly in support of Amendment Application No. 165, SCE submitted W proprietary report WCAP-12148 (Reference 1), which documented justifications for the deferment of repairs to the thermal shield support system until after the 18 month Cycle 10 operating cycle.

Subsequently, SCE committed in an October 6, 1989 letter to repair the SONGS-1 thermal shield support system during a combined Cycle 11 refueling and thermal shield repair outage scheduled to begin no later than June 30, 1990. Current Amendment Application No. 181/PCN-222 fulfills this SCE October 6 commitment and also requests a revision to License Condition 3.M which would continue the thermal shield monitoring program during Cycle 11 operation.

This safety evaluation (SE) documents the results of the NRC staff's review of the proposed replacement design for the SONGS-1 thermal shield support system. This evaluation is based on: (1) technical information, including W proprietary information (Reference 2), submitted by SCE in support of Amendment Application No. 181, (2) an independent evaluation of the thermal shield support system replacement design (Reference 3) performed by SMC O'Donnell Inc. for SCE, (3) information obtained during a May 7, 1990 SCE/NRC meeting, and (4) NRC audits conducted in June and July 1990. In addition, this evaluation is based on information contained in W proprietary report WCAP-12148, submitted earlier by SCE in their February 17, 1989 letter related to Amendment Application No. 165.

The staff's objective in judging the acceptability of the replacement design for the SONGS-1 thermal shield support system was to ensure that the root causes for problems encountered to date in the thermal shield support system have been identified and suitable modifications have been incorporated in the replacement design to preclude or minimize the recurrence of past problems.

This safety evaluation also provides the results of the NRC staff's review of the proposed change to the License Condition 3.M related to the thermal shield monitoring program. In view of the thermal shield support structure degradation that has occurred in the past and the uncertainties inherent in the design

process as it relates to the replacement design of the thermal shield support system, the staff views the monitoring program to be a necessary component of the complete resolution of this problem. The staff's objective in judging the acceptability of the proposed thermal shield monitoring program was to ensure that the program would be capable of detecting significant degradation of the thermal shield support structures during reactor operation.

2.0 EXISTING THERMAL SHIELD SUPPORT SYSTEM DESIGN

As previously described, the SONGS-1 and Haddam Neck thermal shield support systems are of similar design but differ in the size and location of the support system components and in the details of the fasteners for these components. In the following description, the common characteristics of the thermal shield support system design are discussed as well as SONGS-1 specific information. Haddam Neck specific information is provided only for comparative purposes.

The thermal shields in the SONGS-1 and Haddam Neck plants are stainless steel (SS) cylindrical components which are exterior to and concentric with the reactor core barrels, and are attached to and supported by the core barrels. The thermal shields and core barrels are fabricated from ASME SA-240 type 304 SS material. The SONGS-1 thermal shield is approximately 2½ inches in thickness, 134 inches in outside diameter, 163 inches in height, and weighs approximately 48,000 pounds.

The thermal shield in each of these plants is bottom-supported (inverted-pendulum design). In the original design, the thermal shield in each plant was supported by six 304 SS support blocks which were fitted in a circumferential groove (approximately 0.6 inch deep in the SONGS-1 plant) on the outside surface of the core barrel. These blocks attached the thermal shield to the core barrel and in the SONGS-1 plant, were located at 60° intervals around the circumference of the lower edge of the thermal shield (i.e., at 0°, 60°, 120°, 180°, 240° and 300°). Attachment was by means of 316 strain-hardened SS fasteners: two 7/8-inch, one 3/4-inch, and two 1/2-inch diameter bolts and four 3/4-inch diameter dowel pins were used in the SONGS-1 plant. Grooves were

machined in the bolt heads and fitted with lockbars that were welded to the thermal shield to keep the bolts from loosening during reactor operation. The dowel pins were locked in place by means of a circumferential tack weld. The bolts limited differential radial displacements between the thermal shield and core barrel and the dowel pins limited differential axial displacements between the thermal shield and core barrel at their locations.

In addition, the thermal shield support system in each plant incorporated four 304 SS displacement limiter keys located near the top and at 90° intervals around the circumference of the thermal shield (i.e., at 0°, 90°, 180° and 270° in the SONGS-1 plant). In the original design, these keys limited the differential circumferential displacements between the thermal shield and the core barrel but had large radial gaps, thereby permitting differential radial displacements between the thermal shield and the core barrel at these locations. However, due to problems encountered in 1966 during SONGS-1 hot functional testing (HFT), the limiter keys in the SONGS-1 plant were modified prior to commercial operation to accommodate differential circumferential displacements between the thermal shield and the core barrel. The radial gap at the limiter keys was modified to be 0.015 inch during normal plant operating conditions. Similar modifications were not made to the limiter keys in the Haddam Neck plant.

Furthermore, subsequent to the SONGS-1 HFT but prior to commercial operation, the thermal shield support systems in the SONGS-1 and Haddam Neck plants were modified to incorporate six ASTM A-276 type 304 SS flexure supports. The flexures were installed at the top of the thermal shield, between the thermal shield and the core barrel, around the circumference at 21°, 85°, 124°, 205°, 244° and 325° in the SONGS-1 plant. The flexures were attached to the top of the thermal shield by fillet welds, and to the core barrel by 316 strain-hardened SS fasteners (six 1-inch diameter bolts were used in the SONGS-1 plant). These flexures limited the differential radial and circumferential displacements between the thermal shield and the core barrel, but were axially flexible to accommodate differential axial displacements.

Although not part of the thermal shield support system, the irradiation

specimen tubes in the SONGS-1 and Haddam Neck plants can provide indication of thermal shield support system degradation. These specimen tubes are attached axially to the exposed outside surfaces of the thermal shields and core barrels. The eight specimen tubes in the SONGS-1 plant were fabricated in two parts with spigot-type joints and 0.1 inch clearances. Specimen tubes in the Haddam Neck plant were fabricated without spigot-type joints. Specimen tube damage at the thermal shield/core barrel interface would provide a gross indication of thermal shield support system degradation.

3.0 OPERATING EXPERIENCE

As previously noted, problems in thermal shield support systems were encountered during the 1966 SONGS-1 HFT. Post-HFT inspections found evidence that limiter keys were being impacted and that tack welds for 3 of the 24 dowel pins in the support blocks had cracked. Impacting of the limiter keys was inferred from cracks found in the key to thermal shield welds and from key wear. These problems were attributed to ring mode FIV of the thermal shield. As a result, the limiter keys were modified and repaired and the six flexure supports were installed as previously described. In addition, the support block bolts were replaced and the damaged dowel pins were repaired. Subsequently, an abbreviated HFT was performed and the thermal shield support system was reinspected. No evidence of impacting at the redesigned limiter keys was found and SONGS-1 commenced commercial operation in 1968.

Based on the preceding SONGS-1 HFT experience, flexures were also added to the Haddam Neck plant thermal shield support system design, but modifications to the limiter keys similar to those made in the SONGS-1 support system were not made. Apparently, no problems were encountered during HFT with this redesigned support system and commercial operation at Haddam Neck also commenced in 1968.

During the first refueling outage at Haddam Neck in 1969-1970, all six flexures were found to be cracked. No other damage to the thermal shield support system was identified. Flexure cracking was attributed to high cycle fatigue caused by FIV of the thermal shield. The flexures were removed and operation was resumed. No further problems were encountered until 1987, when failures in the

support block fasteners and wear in the limiter keys was found. In addition, an irradiation specimen tube was damaged. As before, the cause of failure was attributed to FIV of the thermal shield. Subsequently, the damaged support block fasteners were replaced and new limiter keys were installed, and the plant returned to commercial operation.

In contrast to the preceding Haddam Neck experience, inspections of the SONGS-1 thermal shield support system in 1971 and 1972 did not find any degradation or failures in the support system. However, during the Cycle 5 refueling outage in 1976, broken flexures were found at the 21°, 85°, 205°, and 325° locations; and during the Cycle 6 refueling outage in 1978, one additional broken flexure was found at the 244° location. Only the flexure at the 124° location remained intact. No evidence of any other degradation or damage to the thermal shield support system was found during these inspections. The cause of flexure failure was attributed to FIV of the thermal shield.

Following the discovery of fastener failure in the support blocks at Haddam Neck in 1987, similar failures were found in the SONGS-1 plant during the Cycle 10 refueling outage in 1989. Again, the cause of the failure was attributed to FIV of the thermal shield. Furthermore, as previously described, no repairs or modifications were made following these 1989 inspections but License Condition 3.M was established and implemented.

4.0 ANALYTICAL MODELING OF THE THERMAL SHIELD SUPPORT SYSTEM

As previously discussed, analyses were performed by W as part of the SCE/W thermal shield action plan to address the thermal shield support system degradation that was identified during the Cycle 10 outage. W proprietary report WCAP-12148 was prepared as part of this SCE/W action plan and was submitted by SCE in part to justify continued operation of SONGS-1 with the degraded thermal shield support system until the Cycle 11 outage. The justification in WCAP-12148 included a root cause assessment of the thermal shield support system degradation and analyses to justify continued operation of the plant with the existing degraded conditions. Types of loads considered in the root cause assessment included random turbulent pressure fluctuations with assumed spatial

distributions and intensities scaled to the SONGS-1 conditions. Types of analyses performed included parametric random vibration response analyses on a sequence of models with various postulated conditions of thermal shield support system degradation (W has stated that similar analyses have been used successfully at a third plant of similar design to predict that the support system was not degraded). These analyses were correlated with the history of the problems encountered at the SONGS-1 plant to validate the analysis methodology and were subsequently used to predict the most probable condition of the thermal shield support system to be expected during the Cycle 10 refueling outage and demonstrate that further degradation during the 18 month Cycle 10 operating cycle would not compromise plant safety.

Since the analytical methodology used previously by W and documented in WCAP-12148 was also used to qualify the replacement design of the SONGS-1 thermal shield support system, the NRC staff's evaluation included a review of the analyses contained in WCAP-12148 in order to understand and validate the analytical approach that was used.

4.1 Determination of the Cause of Degradation

In determining the cause of the thermal shield support system degradation, W performed a vortex shedding analysis and thermal evaluation to assess their degradation potential. Results of this assessment were as follows:

Vortex Shedding

Vortex shedding was considered important since industry technical journals have identified vortex shedding as a viable mechanism for the excitation of thermal shield vibration modes (e.g., Reference 4). In addition, data have shown the presence of some higher order thermal shield vibration modes at frequencies approximately equal to the trailing edge vortex shedding frequencies (Reference 5). To address this issue, an acoustic model of the fluid on both sides of the thermal shield was created. The model was used to calculate acoustically induced pressure differences across the thermal shield for typical trailing edge vortex shedding

frequencies. A differential pressure function was used to simulate the vortex shedding process.

The results of the analysis showed that the thermal shield pressure differences induced by the vortex shedding mechanism were very low and were limited to the region near the trailing edge. The localized nature of the pressure differences was attributed to the acoustic mode frequencies of the thermal shield region being substantially higher than both the trailing edge vortex shedding frequency and the thermal shield mode frequencies.

Based on the above results and consideration of other factors, W eliminated vortex shedding as a primary cause of degradation. The other factors considered included: (1) the small flow channel width between the core barrel and thermal shield relative to the thermal shield thickness, (2) the low probability of obtaining thermal shield vibration amplitudes large enough to correlate with the shed vortices, and (3) the fact that the vortex shedding frequencies are sufficiently higher than the thermal shield mode frequencies to preclude "lock-on."

Thermal Loads

Thermal loads evaluated by W were due to steady-state and thermal transient conditions, and due to the effects of gamma heating. The evaluation considered only the effects on the fasteners in the support blocks and was based only on the difference between the average temperatures of the core barrel (T_{CB}) and the thermal shield (T_{TS}). Only cases where the average core barrel temperature was less than the average thermal shield temperature (i.e., $T_{CB}-T_{TS} < 0$) were considered of significance. The evaluation was based on transients defined in W proprietary documents (References 6, 7 and 8). Neither the SONGS-1 Updated Final Safety Analysis Report (UFSAR) (Reference 9) nor the reactor vessel design specification (Reference 10) identified applicable thermal transients.

The evaluation concluded that thermal transient effects on the support

block fasteners were negligible. Although the ranges of negative values of the temperature difference (T_{CB}-T_{TS}) during the worst transients could be significant, the net effects were negligible due to the large initial positive values of the difference corresponding to steady-state conditions. Based on these results, W eliminated thermal transients as a primary cause of degradation.

Pressures Due to Random Turbulent Flow

Through a process of elimination, W concluded that the primary cause of thermal shield support system degradation was flow-induced vibration. The effects of random turbulent flow were evaluated by using a forcing function model developed for SONGS-1. This model involved the specification of pressure spectral densities (PSDs) on the inside and outside surfaces of the thermal shield. Although no SONGS-1 specific thermal shield displacement amplitude and PSD information was available, such information was available from test data obtained in plant and model tests of a reference plant (References 5 and 11). The approach, therefore, was to use these reference plant data to calibrate a forcing function PSD model, which could then be extrapolated to SONGS-1 conditions using appropriate scaling techniques. This process involved the development of a finite-element model of the reference plant, as well as the development of the appropriate forcing functions. The procedure was as follows:

(a) Create finite element models of the reference plant core barrel thermal shield system.

(b) Use test data on PSDs, correlation lengths and attenuation factors to define appropriate forcing functions, and apply them to the reference plant finite-element model to calculate displacement amplitudes.

(c) Calibrate the forcing function model so that the calculations match the test data amplitudes.

(d) Scale the forcing function model to the SONGS-1 conditions.

The scaled PSDs were then used to determine the response in the SONGS-1 thermal shield support system by standard random vibration response analysis techniques. In this analysis and in the analysis described in (b) above, the mean squared amplitude of each mode of vibration was determined using the PSD functions and the dynamic characteristics of the support system. The peak response was then determined by calculating the square root of the sum of the squares (SRSS) of the vibrational amplitude of the individual modes as follows:

(a) To determine the natural frequencies, the associated eigenvectors and modal stiffness of the thermal shield core barrel structure, a finite element model of the SONGS-1 thermal shield and core barrel was developed. The model included the full length of both the thermal shield and the core barrel. The thermal shield support blocks, the limiter keys and the flexures were also included in the model at their respective locations. The modal stiffness, the natural frequencies and the eigenvectors for each mode were determined.

(b) The previously developed forcing function model was applied to the SONGS-1 finite element model to calculate modal amplitudes.

(c) The modal forces and displacement amplitudes at the support blocks and radial keys were calculated. The modal forces and displacement amplitudes were then combined by SRSS summation to obtain peak root-mean-square (RMS) forces and amplitudes.

(d) The loads on the support block bolts and the support blocks were evaluated using the results of step (c).

In this and in subsequent analyses, the response of the thermal shield to the PSD forcing function model was determined based on the assumption that the loads on the inside and outside surfaces of the thermal shield were uncorrelated.

The elements of the thermal shield support system in the finite element

model were represented by spring and/or beam elements. The flexures were modeled as beam elements with stiffnesses derived from other detailed three-dimensional finite element models of the flexures; the limiter keys were modeled as beam elements with stiffnesses linearized from the gap assumptions; and the support blocks were modeled as combinations of beam and spring elements with an axial stiffness equal to the average vertical stiffness of the support blocks derived from other detailed finite-element analyses.

The finite-element model was validated through correlations with in-plant test results of the static stiffness of the core barrel and the measured natural frequencies of the core barrel beam mode and the thermal shield shell mode N=2; the modal frequencies were measured in an air environment. Hydrodynamic masses were then added to both surfaces of the thermal shield. The hydrodynamic masses for shell modes N=2 and N=3 were assumed to be proportional to those of the reference plant where the correlation ratio was derived from in-plant test data.

Evaluations were performed on models using various thermal shield support boundary conditions. These boundary conditions corresponded to the various postulated degraded conditions in the support system. In each load case evaluated, only the core barrel beam mode, the thermal shield beam mode, and the thermal shield N=2 and N=3 shell mode responses were considered. Other modes were not considered based on previous experience with analyses of this type. In each case, three separate computer runs were made and the results subsequently summed to obtain RMS values. These three runs corresponded to: (1) the thermal shield and core barrel beam modes, (2) the thermal shield N=2 shell mode and, (3) the thermal shield N=3 shell mode.

4.2 Structural Evaluation and Correlation with Historical Failure Data

Structural analyses were performed by W on a sequence of models corresponding to the progressive thermal shield support system degradation that was observed during the plant operating history. The analyses focused on fatigue failure of

the top visible bolts in the support blocks because these bolts were judged to be most susceptible to FIV failure.

The fatigue evaluation was based on membrane plus bending stresses in the bolts. The membrane stresses were based on the radial vibratory loads assuming a joint efficiency factor, and the bending stress was based on the idealization of the bolts as guided cantilevers subjected to vertical displacements. In addition, differing concentration factors were applied to the membrane and bending stresses. W informed the staff that stress concentration factors (SCFs) of 4 and 3.5 were applied to the membrane and bending stresses, respectively, in the bolts. The 3.5 SCF was less than the ASME Code recommended value of 4, but was justified on the basis of the results of analytical studies presented in Reference 12. Justification on this basis is permitted by the ASME Code (Reference 13), and use of the 3.5 SCF was therefore acceptable to the staff.

Since the random vibration analyses provided RMS values of responses only, additional measures were necessary to obtain peak values for the fatigue evaluation. Accordingly, a normal distribution was assumed for the distribution of 1 to 4 sigma values. Using this normal distribution, partial usage factors for several sigma values were obtained and then summed to obtain the total fatigue usage for the bolts over the period of operating time being considered.

Contrary to the description provided in WCAP-12148, the fatigue usage factors for the thermal shield support block bolts were calculated by using the fatigue failure curve for stainless steel in Figure 8 of Reference 14. WCAP-12148 had stated that the fatigue usage factors were based on a composite failure curve derived from the ASME Code fatigue design curve for up to 10^8 cycles, and from the fatigue failure curve in Reference 14 for between 10^8 and 10" cycles. In addition, in contrast to the ASME Code fatigue evaluation methodology, no limitation was imposed on the range of primary plus secondary membrane plus bending stresses (P_L+P_b+Q) in the fatigue usage calculations. For greater than 10^6 cycles, the ASME Code methodology requires that one of three fatigue design curves be selected based on certain limitations on the (P_L+P_b+Q) range.

Fatigue usage factors for greater than 10^6 cycles calculated on the basis of the Reference 14 failure curve are less than the usage factors derived (i.e, the fatigue failure curves are derived by doubling the ASME Code fatigue design curve stress values) from the least conservative of the ASME Code fatigue design curves, Curve A of Figure I-9.2.2, recognizing that the (P_L+P_b+Q) range of interest is greater than the ASME Code would allow. For the range of stress cycles under consideration, the alternating stress values in the Reference 14 fatigue failure curve were uniformly approximately seven percent greater than the alternating stress values derived from Figure I-9.2.2, Curve A, of the ASME Code. Nonetheless, the staff judged the licensee's use of Reference 14 data to be acceptable for calculating fatigue usage factors for this specific application (i.e., performing comparative failure assessments of parametric evaluations) based upon review of the licensee's documentation and sound engineering judgement.

Using the methodology described, W determined the history of bolt fatigue usage starting with the conditions observed during HFT, and progressing to the conditions observed during the Cycle 10 refueling outage and extending to 18 months beyond to predict the conditions to be expected at the end of Cycle 10 operation. Each condition evaluated was identified by a three-part load case number N_1-N_2-N_3 in which N_1, N_2, and N_3 represented the number of flexures, limiter keys, and support blocks, respectively, considered active (i.e., undegraded or unbroken) in the evaluation. The load cases evaluated and correlated with Cycle 10 outage conditions and the results obtained are shown in Table 1. These evaluations were based on the derived PSDs which were further scaled to be consistent with analytical results. Although the top visible bolts in the support blocks were examined and found to be undamaged following the HFT in 1966, fatigue evaluations based on the derived loads indicated that the bolts in two of the blocks would have failed. Accordingly, the previously developed PSDs were reduced by a scaling factor such that the fatigue cumulative usage factors of the bolts in these two blocks were just below the allowable value of 1.0 (i.e., 0.99) (Load Case 0-4-6). As illustrated in Table 1, the following results were obtained:

TABLE 1

RESULTS OF THE W HISTORICAL CORRELATION AND EVALUATION[1] OF THE SONGS-1 THERMAL SHIELD SUPPORT SYSTEM DEGRADATION

Load Case[2]	Calendar Time	Effective Power Years	Significant Fatigue Usage[3]	Comments
0-4-6	21 days		Marginal at 0°, 180° blocks	HFT, bolts replaced, PSDs scaled to coincide with analytical results
6-4-6	1968-1976	7.3	Acceptable at 0°, 180° blocks	
2-4-6	1976-1978	1	Acceptable at 0°, 180° blocks	
1-4-6	1978-1988	5	Acceptable at 300° block	
1-0-6	1978-1988	5	Not acceptable at 0°, 240° blocks; acceptable at 300° block	No blocks degraded initially
1-0-5	1978-1988	5	Not acceptable at 240°, 300° blocks; acceptable at 180° block	0° block degraded initially
1-0-4	1978-1988	5	Acceptable at 60°, 180°, 300° blocks	0°, 240° blocks degraded initially
1-0-3	1978-1988	5	Acceptable at 60°, 180° blocks	0°, 240°, 300° blocks degraded initially

NOTES:

1. Evaluations are based on flow induced vibration pressure spectral densities (PSDs) which were scaled such that the fatigue usage factor during hot functional testing (HFT) was just satisfied.

2. Load case notation: In load case N_1-N_2-N_3, N_1, N_2 and N_3 are the number of flexures, limiter keys and support blocks, respectively, which are effective.

3. The Significant Fatigue Usage column only lists block locations where some appreciable amount of fatigue usage is indicated for the top two visible bolts in the support block.

Load Case 6-4-6: During the 7.3 effective power years (EPY) of operation between 1968 and 1976 when four of the six flexures were observed to be broken, the cumulative fatigue usage factors in all of the bolts were acceptable.

Load Cases 2-4-6 and 1-4-6: After the 1 EPY of operation between 1976 and 1978 when four of the six flexures were known to be broken, and the subsequent 5 EPY of operation between 1978 and 1988 when five of the flexures were known to be broken, the cumulative usage factors in the bolts were still found to be within acceptable limits.

Note: This conclusion did not agree with the observed degradation: fasteners in the 0° and 240° support blocks were known to be degraded in 1989. Therefore, all the limiter keys were assumed to be worn in the subsequent evaluations (all the limiter keys were assumed to be undegraded in the previous evaluations) in order to obtain better correlation with the observed conditions.

Load Case 1-0-6: This evaluation showed that before the end of 5 EPY of operation between 1978 and 1988, the allowable fatigue usage factor was exceeded in the bolts in the 0° and 240° support blocks with the usage factor in the 0° block bolts being greater than that in the 240° support block bolts. The implication was that the 0° support block bolts would fail before the 240° support block bolts.

Note: The results of this evaluation were partly in agreement with the 1989 observations: bolts in the 0° block were observed to be degraded in 1989. Based on the results of the 1-0-6 load case, the 1-0-5 load case was evaluated.

Load Case 1-0-5: This evaluation showed that before the end of 5 EPY of operation, based on fatigue usage factors, bolts in the 240° and 300° blocks would fail with failure occurring first in the 240° block.

Note: The results of load cases 1-0-6 and 1-0-5 were in agreement with the 1989 observation: bolts in the 0° and 240° block were found to be degraded. Based on the results of the 1-0-5 load case, the 1-0-4 load case was evaluated.

Load Case 1-0-4: This evaluation showed that for a 5 EPY period of operation, no further failures would occur in the bolts of the remaining support blocks.

Note: However, if the 240° block remained partly functional, previous load case 1-0-5 would indicate possible failure of the bolts in the 300° block. Consequently, load case 1-0-3 was evaluated.

Load Case 1-0-3: This evaluation showed that for a 5 EPY period of operation, the additional fatigue damage in the remaining blocks was negligible.

Based on these evaluations, W estimated that the worst condition to be expected during the Cycle 10 refueling outage was probable damage to the bolts in the 0°, 240° and 300° blocks. This compared closely with the as-found conditions observed in 1989 (See Table 2) except that no degradation was observed in the bolts of the 300° block.

Additional evaluations were performed by W to determine the expected progression of the thermal shield support system degradation over the next 18 month Cycle 10 operating cycle. These evaluations considered various scenarios and included the effects of seismic loads and concluded that no additional supports would be degraded during Cycle 10 operation.

Other W evaluations assessed the consequences of further degradation. The worst credible and the worst conceivable degraded cases were evaluated and thermal hydraulic stability analyses were performed. These other evaluations were excluded from this review since they are pertinent only to the consequences of degradation and not to the assessment of the replacement design.

TABLE 2

AS-FOUND CONDITION[1] OF SUPPORT BLOCK FASTENERS IDENTIFIED DURING THE 1989 CYCLE 10 REFUELING OUTAGE

	SUPPORT BLOCK LOCATION					
FASTENERS	0°	60°	120°	180°	240°	300°
2 Top Bolts	-	-	-	-	1 Broken[2,3]	-
Hidden Bolt	Broken[2]	-	-	-[4]	Broken[2]	-
2 Bottom Bolts	-	-	-	-	-	-
2 Top Dowel Pins	-	-	-	-	-[5]	-
2 Bottom Dowel Pins	-	-	-	-	-	-

NOTES:

1. Condition was determined by visual inspection via remote camera equipment.
2. Bolts were determined to be broken based on tolerance stackup analyses.
3. Tack welds for both bolt locking bars were cracked.
4. Bolt was inboard but determined to be unbroken based on tolerance stackup evaluation.
5. Lock weld for one dowel pin was cracked.

TABLE 3

AS-FOUND CONDITION OF SUPPORT BLOCK FASTENERS IDENTIFIED DURING THE 1990 CYCLE 11 REFUELING OUTAGE

	SUPPORT BLOCK LOCATION					
FASTENERS	0°	60°	120°	180°	240°	300°
2 Top Bolts	2 Broken	2 Galled	1 Broken	-	2 Broken	1 Broken
Hidden Bolt	Broken	Broken	-	Broken	Broken	Broken
2 Bottom Bolts	1 Broken	-	-	-	2 Broken	-
2 Top Dowel Pins	2 Loose	-	-	-	1 Loose	2 Loose
2 Bottom Dowel Pins	-	-	-	-	-	-

NOTE: The condition was identified as fasteners were being removed during replacement of the thermal shield support system.

4.3 Correlation Between the Cycle 11 Outage As-Found and Predicted Conditions

As previously discussed, WCAP-12148 projected the thermal shield support system as-found condition to be expected following Cycle 10 operation. This application of the W analytical methodology in part provided the basis for allowing continued plant operation until the Cycle 11 outage and a comparison of the projected versus the as-found conditions will reflect on the accuracy and conservatism of the methodology used.

During a NRC/SCE meeting on October 3, 1990, SCE provided a description of the SONGS-1 thermal shield support system as-found condition that was identified during the Cycle 11 refueling outage. The following conditions were described:

(a) The 124° flexure support was still intact.
(b) Some wear was observed at the four limiter key locations.
(c) No noticeable damage to the support blocks was observed, but the fasteners did sustain some damage and their as-found condition is as described in Table 3.

Although a comparison of the conditions in Tables 2 and 3 would indicate that degradation of the fasteners in the support blocks was more severe during the 1.0 EPY Cycle 10 operation than the previous 5.0 EPY of operation, this is not necessarily the case. The visual inspections performed during the Cycle 10 outage were limited and were not as diagnostic as the physical inspections that were performed during the Cycle 11 outage when the support system was being replaced. It is very likely that degraded conditions existed during the Cycle 10 outage that could not be identified by the limited visual inspection that was performed, but were subsequently identified during the Cycle 11 outage inspection. Therefore, the data does not necessarily indicate that additional or accelerated degradation occurred during Cycle 10 operation.

As previously discussed, the WCAP-12148 analyses were extended for 1.5 EPY beyond the Cycle 10 outage to predict to what extent the support block fasteners would degrade during the Cycle 10 operating cycle. The W analyses predicted that no additional support system degradation would occur during

TABLE 4

RESULTS OF W EVALUATIONS[1] OF EXPECTED DEGRADATION OF THE SONGS-1 THERMAL SHIELD SUPPORT SYSTEM FOLLOWING CYCLE 10 OPERATION

Load Case [2,3]	Calendar Time	Effective Power Years	Significant Fatigue Usage[4]	Comments
1-0-4	1978-1990	6.5	Acceptable at 60°, 180°, 300° blocks	0°, 240° blocks degraded initially
1-0-3	1978-1990	6.5	Acceptable at 60°, 180° blocks	0°, 240°, 300° blocks degraded initially
1-0-2	1978-1990	6.5	Acceptable at 60°, 120° blocks	0°, 180°, 240°, 300° blocks degraded initially
0-0-3	1989-1990	1.5	All blocks degraded	0°, 240°, 300° blocks degraded initially

NOTES:

1. Evaluations were based on flow induced vibration pressure spectral densities which were scaled such that the fatigue usage factors during hot functional testing (HFT) were just satisfied.
2. Load case notation: In load case N_1-N_2-N_3, N_1, N_2, and N_3 are the number of flexures, limiter keys and support blocks, respectively, which were effective.
3. The first three load cases assume that the last flexure remaining intact does not fail during Cycle 10 operation. The last load case assumes that the last flexure fails. All of the load cases assume degraded limiter keys.
4. The Significant Fatigue Usage column only lists block locations where some appreciable amount of fatigue usage is indicated for the top two visible bolts in the support block.

Cycle 10 operation beyond that which was assumed to exist during the Cycle 10 outage (i.e., degradation would be limited to the 0°, 240° and 300° support blocks and the 124° flexure would remain intact). The load cases considered in the W analyses and the results obtained are presented in Table 4 and discussed below.

Load Case 1-0-4: This evaluation showed that for a 6.5 EPY period of operation with the 0° and 240° blocks degraded, no further failures would occur in the bolts of the 60°, 180° and 300° blocks.

Note: As before, if the 240° block remained partly functional, the previous load case 1-0-5 (see Table 1) would indicate possible failure of the bolts in the 300° block. Therefore, failure of the 300° block was evaluated by load case 1-0-3.

Load Case 1-0-3: This evaluation showed that for a 6.5 EPY period of operation, the additional fatigue damage in the remaining blocks was negligible. Nonetheless, the implications of failure of the worst of the remaining blocks (the 180° block) was also evaluated by load case 1-0-2.

Load Case 1-0-2: This evaluation showed that for a 6.5 EPY period of operation, fatigue usage would be accumulated in the 60° and 120° blocks but failure would not occur.

Note: The evaluations presented thus far assume that the remaining flexure at the 124° location does not fail. Load case 0-0-3 was performed to evaluate the effects of flexure failure during Cycle 10 operation, assuming existing failures in the 0°, 240° and 300° support blocks as previously described.

Load Case 0-0-3: This evaluation showed that for a 1.5 EPY period of operation, failure of the bolts in the 180° block would occur. Degradation would then progress to the remaining two undegraded blocks at the 60° and 120° locations.

Based on the considerations discussed in WCAP-12148, W concluded that failure of the last remaining flexure was not likely. W analyses indicated that failure of the other flexures has caused the thermal loads on the intact flexure to decrease, and that the intact flexure could withstand the loads imposed during a seismic event. Although W assessed that failure of the other flexures has caused the fatigue loading of the intact flexure to increase, W reasoned that operating history would indicate that flexure failure would have already occurred if high cycle fatigue were a problem. Therefore, W concluded that failure of the 124° flexure was unlikely and that the likely worst case condition at the end of Cycle 10 operation would be degradation of the 0°, 240° and 300° thermal shield support blocks.

As illustrated in Table 3, the W predictions were only partially correct. The 0° and 240° support blocks were fully degraded (i.e., both visible top bolts broken and the hidden bolt broken) as predicted. Although the 300° support block was not fully degraded as predicted, it was close (i.e., one visible top bolt broken and the hidden bolt broken). The 60°, 120° and 180° support blocks were somewhat degraded (i.e., each had a broken bolt) which was not expected. Finally, the 124° flexure did not fail during Cycle 10 operation, as predicted.

4.4 NRC Staff's Position Related to the Analytical Modeling of the Thermal Shield Support System

The staff has reviewed the analytical methodology used in modeling the thermal shield support system and finds that the approach used by the licensee is sound and based on good engineering judgement. Specifically:

(a) Use of a 3.5 SCF for evaluating bending stresses in the support block bolts was found to be acceptable, as was the methodology used to calculate fatigue usage factors (SE Section 4.2).

(b) In view of the absence of SONGS-1 specific PSD data, and given the data available, the methods utilized in WCAP-12148 to develop the forcing functions used in the structural evaluations were found to be acceptable. Methods utilized by licensee as stated in Section

4.2 were based on achieving reasonable correlations between the data available and on valid theoretical considerations and were found to be acceptable (SE Section 4.2).

(c) The staff agrees that the WCAP-12148 evaluations to determine the progressive degradation of the thermal shield support system for the 13.3 EPY of operation between HFT in 1966 and the Cycle 10 refueling outage in 1989 correlated closely with the physical degradation observed during the plant operating history (SE Section 4.2).

(d) The WCAP-12148 prediction of the support block fastener conditions following Cycle 10 operation only partially correlated with the as-found conditions observed during the Cycle 11 outage. Partial degradation of the 60°, 120° and 180° support blocks was not consistent with the W predictions and suggests that additional correlation of the analytical model with the as-found conditions is warranted (SE Section 4.3).

(e) The analytical methodology assumes support block degradation is due to FIV and this assumption has not been substantiated. Recognizing that the analytical predictions only partially correlated with the conditions observed during the Cycle 11 outage, that the Cycle 10 outage inspection data was quite limited, and that there are uncertainties inherent with design work of this nature, the licensee should attempt to identify the root cause of fastener failure in order to further validate the analytical methodology used. In this regard, the licensee should examine the failed fasteners in detail (SE Section 4.1).

Based on the considerations discussed above, the staff is satisfied that the analytical methodology used by the licensee to model the thermal shield support system is acceptable. The staff's determination is contingent upon the licensee satisfactorily addressing the outstanding issues discussed in (d) and (e) above.

5.0 THERMAL SHIELD SUPPORT SYSTEM REPLACEMENT DESIGN

The proposed design of the replacement support system for the SONGS-1 thermal shield is intended to correct deficiencies in the original design based on SCE/W assessments that the root cause of the failures experienced to date was FIV. Accordingly, the replacement design was selected based on thermal shield parametric FIV evaluations performed by W to determine the sensitivity of the loads and displacements in the support system to support system stiffnesses and locations. FIV pressure loads due to random turbulent excitations were applied to a coupled three-dimensional model of the thermal shield and core barrel to obtain the loads and displacements at the supports for various modes of vibration. Although the replacement design is similar to the original design, the components in the design will be stiffened and strengthened as follows:

Flexure Supports: The existing flexures will be replaced with new flexures fabricated from stronger ASME SA-479 XM-19 high alloy stainless steel (annealed) material. The geometry of the flexure region in the supports will be improved to reduce stresses due to radial and circumferential loadings, and the design established a preload on the web portion of the flexures to minimize mean stresses at operating conditions. The flexures will be fabricated in one piece or, if more than one piece is used, by welding pieces together with the welds located in areas of low stress (failures in flexures in the SONGS-1 and Haddam Neck plants have been observed in the highly stressed flexure bend radius welds; in addition, the large material grain size at the flexure fracture location contributed to the failures). All welded connections to the thermal shield will be replaced by bolted fasteners and dowel pins. The flexure at the 21° location will be relocated to the 352° location to reduce the loading on the highest loaded flexure (the configuration of the flexures in the replacement design is more symmetric than that in the original design).

Limiter Keys: W evaluations suggested that wearing will occur in the keys. However, since the keys will be required to limit differential radial displacements between the thermal shield and the reactor core barrel, the limiter keys will be replaced with keys of similar design but

with a smaller radial clearance (0.005 inch nominal vs. 0.015 inch in the previous design). In addition, the new design will be bolted rather than welded and the existing keyways will be reconditioned prior to installation of the new keys.

Support Blocks: The existing support blocks will be replaced with wider blocks which more than triple the contact area between the thermal shield and the support blocks, thereby increasing the efficiency of the joints. The number and size of the fasteners were increased such that the total cross-sectional areas of the bolts and dowel pins were increased by more than 75 percent and 150 percent, respectively. In addition, the dowel pins were designed for interference fit (rather than shrink fit in the original design) and the bolts and dowel pins will be restrained from loosening.

5.1 Design Criteria

The replacement design of the SONGS-1 thermal shield support system was established primarily on the basis of the ASME Code Section III, Subsection NG, 1986 Edition. The design considered both the 6-4-6 and 6-0-6 load cases (see Table 1, Note 2). The 6-4-6 load case corresponded to the design configuration, but the 6-0-6 load case was also considered because wear of the limiter keys was expected to occur during the design life of the thermal shield support system.

Load Case 6-4-6: Except for the fatigue usage criterion used for the flexure design, the replacement support system was designed to the criteria of the ASME Code, Section III, Subsection NG. The high cycle fatigue capacity of the replacement flexures was evaluated using a variation of the procedure given in the ASME Code, Subsection NG-3222.4(e). The Code specified that Curve A of Figure I-9.2.2 may be used if the stress range (P_L+P_b+Q) is less than 27.2 ksi. The licensee modified this criterion by increasing the stress range limit to 44 ksi. At a meeting in Westinghouse offices in Pittsburgh on June 26, 1990, W presented data which provided justification for this modification. On the basis of these data, W estimated that strain ratchetting will not occur if the stress

range (P_L+P_b+Q) is less than 48 ksi. This is twice the value of Curve A of Figure I-9.2.2 at 10^{11} cycles. For conservatism, the core stress was reduced to 0.9 of the double value of Curve A at 10^8 cycles which is 44 ksi. The staff finds this value acceptable on the basis of the more commonly used shakedown range limit of twice the material yield strength.

The cumulative usage factor, U, for the flexures was calculated in accordance with ASME Code Section III, Subsection NG-3222.4(e). Calculating U<1.00 implies the flexure will not have fatigue failure during the design lifetime.

Load Case 6-0-6: Similar to the 6-4-6 load case, the degraded replacement support was qualified to the criteria of the ASME Code, Section III, Subsection NG, except for the fatigue usage criterion used for the flexure design. Instead, the high-cycle fatigue capacity of the flexures in the degraded condition was based on the failure curve (i.e., 2 times Curve A of Figure I-9.2.2) corresponding to the modified fatigue design curve discussed in the preceding 6-4-6 load case.

The thermal shield and its support system for SONGS-1 are not ASME Code components and applying the ASME Code criteria and the fatigue criteria previously discussed for qualifying the design of the replacement thermal shield support system is conservative.

5.2 Design Loads

Loads considered by W in the SONGS-1 thermal shield support system replacement design included dead weight, thermal pressure, FIV and seismic.

Thermal Loads

The thermal loads considered were the same as those considered previously in WCAP-12148 and included gamma heating, steady-state thermal loads and transient thermal loads.

The thermal events evaluated included steady state 100% full power and 91.5% power operation, and normal and upset condition transients. The preload in the flexure supports will be established based on the 100% full power with reduced T_{avg} conditions; however evaluations will be performed to show that the design is acceptable at 91.5 % power at reduced T_{avg} conditions. Normal and upset thermal transients were the same as those considered previously in WCAP-12148.

Pressure Loads

The steady-state pressure loads acting on the core barrel and thermal shield were considered in the support system replacement design and in the core barrel and thermal shield evaluations.

Flow Induced Vibration Loads

Based on the previous WCAP-12148 assessments, loads resulting from vortex shedding from the trailing edge of the thermal shield and fluid/structure instability were not expected to be significant and hence not considered in the design qualification. Pressure differences due to vortex shedding were found to be very low and limited to the region near the trailing edge. In addition, the WCAP-12148 assessments had shown that both static and dynamic stability were assured even if all six support blocks were degraded. While the amplitudes of vibrations could be significant for the degraded condition, they were shown to be insignificant if the effective rotational stiffness of the thermal shield support system is 25-50 times the static stability limit. This level of stiffness is achieved in the replacement design.

Consequently, the FIV analysis was reduced to considering the effects of random or turbulent excitations only. These effects were based on the PSDs previously developed in WCAP-12148.

Seismic Loads

Seismic loads considered were based on seismic response spectra at the reactor vessel supports. Spectra evaluated were the 0.67g Modified Housner Earthquake design basis earthquake (DBE) spectrum and the 0.25g Modified Housner Earthquake operating basis earthquake (OBE) spectrum.

5.3 Design Load Combinations

The following load combinations were considered by W in the replacement thermal shield support system design.

(a) Normal and Upset Conditions

1. D/W + Pss + FIV (5 Sigma)
2. D/W + Pss + OBE + FIV (4 Sigma)
3. D/W + Pss + T + FIV (5 Sigma)
4. D/W + Pss + OBE + T + FIV (4 Sigma)

(b) Faulted Conditions

D/W + Pss + DBE

Where:

D/W = Deadweight
Pss = Steady State Pressure
FIV = Flow Induced Vibration Load
OBE = Operating Basis Earthquake
DBE = Design Basis Earthquake
T = Thermal Loads

Limits for the thermal shield support system components, including threaded structural fasteners, were in accordance with the ASME Code, Section III, Subsection NG requirements. Bolt preload requirements, including tight joint requirements, were also in accordance with the ASME Code.

5.4 Design Analysis Methodology

The types of analyses performed by W to qualify the support system replacement design included thermal stress analyses, random vibration analyses and fatigue evaluations. The analyses involved: (1) determination of the loads and/or displacements in the support system for the loads previously identified, (2) determination of the stresses during the various operating conditions at critical locations in the support system in accordance with ASME Code defined categories, and (3) verification of compliance with ASME Code stress limits. The methods used to evaluate the stresses in the SONGS-1 thermal shield support system due to the postulated loading conditions were reviewed and evaluated by the staff.

Thermal Analyses

A finite-element model for the core barrel and thermal shield was used to calculate temperature distributions in these components during the conditions considered. Heat generation rates in parts of the core barrel and thermal shield in the core region and fluid temperatures at the surfaces of the core barrel and thermal shield were inputted into the model to calculate the average through-wall-thickness temperature distributions in the core barrel and the thermal shield. The resultant temperature profiles were used to determine the relative displacements between the two components, the forces and/or displacements to be resisted or accommodated by elements of the support system, and resultant stresses in the core barrel and thermal shield.

Determination of the forces and displacements to be resisted or accommodated by the thermal shield support system using the preceding methodology was in accordance with conventional thermal stress analysis methods, and therefore acceptable. The analysis did not include through-wall temperature effects, but these are expected to be negligible. Differences between the fluid temperatures applied to the inside and outside surfaces of the core barrel and thermal shield were also negligible.

Random Vibration Analyses

The random vibration analyses were the same as those previously performed as described in WCAP-12148. These analyses were found to be in accordance with conventional structural analyses of this type and therefore acceptable. The analyses determined the RMS values for: (1) displacements at the flexure supports, (2) displacements at the displacement limiter keys and (3) forces in the support blocks.

The analyses were based on the previously described PSDs developed for the WCAP-12148 analyses. The PSDs were scaled as described below for the qualification of the flexure supports, but not scaled for the qualification of the support blocks or the displacement limiter keys.

Seismic Analysis

The seismic analysis performed was based on a three-dimensional finite-element model of the SONGS-1 reactor pressure vessel (RPV) and its internals. The model consisted of three concentric structural submodels connected by nonlinear impact elements and stiffness and mass matrices.

Both the 0.25g OBE and 0.67g DBE Modified Housner Earthquake spectra were analyzed. Structural damping of 2% and 4% were assumed for the OBE and DBE, respectively. These seismic loadings were input into the analyses as conservative El Centro record-based synthetic time histories. The response spectra for these time histories enveloped the design spectra. The time histories developed were applied simultaneously in three directions in the analyses performed.

The constraint of differential radial displacements between the core barrel and the thermal shield provided by the limiter keys was included in the seismic analyses since the displacements were expected to be sufficiently large to close the nominal radial gap at the keys (i.e., the seismic analysis was based on the support system boundary conditions of the 6-4-6 load case).

The seismic inputs and the methods used in the analysis, including the W proprietary WECAN computer code nonlinear options, have been previously reviewed and accepted by the staff and thus are acceptable for the current replacement design qualification.

5.5 Analyses Results

The results of the W qualification analyses were as follows:

Flexure Supports

Except for the seismic analysis which was performed assuming the 6-4-6 load case support system boundary conditions, the structural evaluations were conservatively based on both the 6-4-6 and 6-0-6 load case boundary conditions. In addition, the PSDs previously developed for the WCAP-12148 evaluations were conservatively scaled such that the fatigue usage factor, U, for the flexures in the existing design for the worst of the 6-4-6 and 6-0-6 load case boundary conditions was slightly above the allowable usage factor of 1.0 for 50 months of operation (in the 1972 inspections, the licensee found that after 50 effective power months of commercial operation and after installation of the six flexure supports, these supports were not damaged).

Based on the preceding, it was verified that the ASME Code primary membrane (P_m) and primary plus secondary membrane plus bending (P_L+P_b+Q) stress limits for the previously specified load combinations were satisfied at the critical sections in the flexures of the replacement design. These sections were located in the webs of the flexures.

The fatigue evaluation was based on the maximum stress in the flexures which occurred on the inside radii of the flexures nearest the top edge of the thermal shield. Further evaluations were performed for the effects of stresses during peak random vibrations of the thermal shield (the analysis provided peak RMS stresses only). These evaluations were based on the methods of Reference 15 for the construction of a fatigue usage factor,

U_{rms}, for a given total number, N_{rms}, of random vibration stress cycles which have a Rayleigh amplitude distribution and a standard deviation of σ_{rms}. These conditions are typical of most random vibration problems for lightly damped structures in which the response is narrow-banded and can be adequately represented by a Rayleigh distribution, which was the case in the FIV of the thermal shield. Based on this procedure, a 4.45 sigma factor was applied to the FIV stresses for comparison with the ASME Code, Figure I-9.2.2, Curve A, allowable alternating stress, Sa, of 23.7 ksi for 10^{11} cycles.

For the 6-4-6 load case, the fatigue usage factor calculated on the basis of design Curve A of Figure I-9.2.2 (with the increase of range of (P_L+P_b+Q) from 27.2 ksi to 44.4 ksi) was within the allowable limit of 1.0. However, for the 6-0-6 load case, the similarly calculated usage factor satisfied the allowable limit of 1.0 when the modified fatigue curve (i.e., 2 times Curve A of Figure I-9.2.2) was used, thus ensuring that the cumulative fatigue effects would not result in structural failure.

The fatigue usage factors for both the 6-4-6 and 6-0-6 load cases for the FIV loads alone were shown to be acceptable for the 15 year design evaluation life. However, the calculation of the usage factors for qualification of the design of the replacement support system included stress cycles due to thermal, seismic and pump overspeed (POS) conditions. The POS condition was assessed by increasing the previously derived 4.45 sigma FIV stresses by a factor of $(1.32)^2 = 1.74$ (the flow rate during the POS condition is 32% higher than during normal conditions).

The analyses verified that the loads in the critical lower bolts which attach the flexures to the core barrel were acceptable and that the ASME Code bolt preload criterion for tight joints was satisfied. The bolt loads were based on 4 sigma FIV loads and the bolt preload was based on 5 sigma FIV loads.

Displacement Limiter Keys

The fasteners in the limiter keys were assessed on the basis of 5 sigma FIV loads and the 6-4-6 load case boundary conditions.

The analysis verified that the ASME Code limits were satisfied. The alternating stress was less than the ASME Code Figure I-9.2.2, Curve C limits.

Support Blocks

The design of the support blocks was qualified on the basis of analyses similar to those performed for the flexure supports. As before, both the 6-4-6 and 6-0-6 boundary condition analyses and a Rayleigh distribution of the responses to the FIV loads were considered; however, the FIV loads were not scaled (i.e., reduced) as in the case of the flexure supports.

The analysis verified that all ASME Code stress limits were satisfied for both load cases. The fatigue evaluations were based on the ASME Code Figure I-9.2.2, Curve A allowable values and included stress concentration factors (SCFs) of 3.5 and 4 for fastener bending and membrane stresses, respectively, which were previously found to be acceptable.

5.6 Material Design Requirements

For the most part, the materials used by SCE in the thermal shield support system replacement design are the same as those used in the original design and are therefore acceptable. However, the staff determined that additional information was required to determine if the AISI Type 316 stainless steel bolting material is susceptible to stress corrosion cracking (SCC). The stainless steel bolts are designed with an integral locking cup which is expanded to lock the bolt in place following installation. The staff's concern is that the expansion of the integral locking cup into the recesses for cottering may produce sufficient cold work that stress corrosion will occur, even in primary water.

By letter dated August 28, 1990, SCE responded to the staff's concern related to stress corrosion cracking of the AISI Type 316 material. With W concurrence, SCE concluded that stress corrosion cracking of the expanded locking cups was not likely to occur. The licensee's conclusion was based on the fact that stress corrosion cracking has not been observed in AISI Type 316 Ti stainless steel bolts in similar applications and the similarity in composition and mechanical properties between 316 Ti SS and 316 SS.

Although the SCE/W argument has some merit, it is the staff's position that sufficient data currently does not exist to resolve this matter. Therefore, the NRC is sponsoring autoclave testing of three preloaded bolts with expanded locking cups. It is currently planned to test for up to nine months with inspections performed at 1, 3, 6, and 9 months. The absence of SCC after nine months of testing will provide reasonable assurance that the AISI Type 316 SS is not susceptible to stress corrosion cracking. Failure of the expanded locking cups after nine months of testing, however, would indicate that additional SCE/W evaluation is required.

5.7 Independent Third-Party Evaluation

The licensee contracted SMC O'Donnell Incorporated, to perform an independent third-party analysis of the existing and new thermal shield support system design. The O'Donnell independent evaluation of the acceptability of the support system replacement design was similar to the SCE/W qualification of the support system. The loads considered, the analyses performed, and the design criteria utilized were the same. However, W proprietary data used in the W design qualification were not provided to O'Donnell. These data related to the PSDs for the FIV analysis and the thermal transient data.

The NRC staff reviewed the O'Donnell independent evaluation to assess the adequacy of the O'Donnell evaluation and to establish the extent to which the O'Donnell evaluation provided an independent qualification of the thermal shield support system replacement design. During the review, particular emphasis was placed on differences between the W qualification and the O'Donnell evaluation analyses.

5.7.1 Evaluation Criteria

The O'Donnell evaluation was based on the same modified ASME Code, Section III, Subsection NG criteria for fatigue as the W qualification analysis.

5.7.2 Evaluation Loads

Loads considered in the evaluation were thermal, FIV turbulent flow, and seismic effects. Unlike the W qualification analysis, no other loads were considered and/or evaluated.

Thermal Loads

Due to the proprietary nature of the data required to perform the thermal transient analyses, the O'Donnell evaluation was based on flexure displacements and support block loads provided by W. These displacements and loads were obtained from the thermal transient analyses performed by W and were subsequently used by W to qualify the replacement support system design.

Since the thermal transients did not contribute significantly to fatigue usage in the support system, use of these thermal transient data provided by W was considered acceptable.

Flow Induced Vibration Loads

Similar to the case of thermal transients, the W proprietary FIV PSDs were not provided to O'Donnell for their independent evaluation. Instead, the O'Donnell evaluation used PSDs based on data available in the open literature and local fluid velocities obtained from a flow analysis performed for SONGS-1. This is acceptable based upon the following discussion.

Based on data available in the open literature on dynamic pressure measurements in the downcomer of a PWR (References 16, 17 and 18), the functional form of each PSD was assumed (this form was similar to that in

the W analysis). In this form, the PSD is proportional to the square of the fluid dynamic pressure, $(\rho V^2)/2$, where ρ is the density of the fluid and V is the local fluid velocity. Local fluid velocities were obtained from a three-dimensional flow model of the SONGS-1 core barrel/thermal shield annuli using the FLOW3D computer code. Analyses were performed for one-, two-, and three-pump flow conditions. However, based on discussions with W, results for only the three-pump condition was used. This flow analysis was performed by Southwest Research Institute and documented in Reference 19. Using this approach, except for establishing a scaling factor, PSD forcing functions were defined on the inside and outside surfaces of the thermal shield and were subsequently used in the random vibration analysis of the thermal shield.

Seismic Loads

Seismic loads were based only on the 0.25 g Modified Housner Earthquake OBE response spectrum at the reactor vessel supports. The DBE spectrum was not considered.

5.7.3 Load Combinations

The only load combination considered was the following:

Normal and Upset Conditions
D/W + OBE + T + FIV (4 Sigma)
Where the terms are as previously defined.
Bolt preload requirements were in accordance with the ASME Code.

5.7.4 Analysis Methodology

Analyses performed by the O'Donnell evaluation were similar to those performed in the W qualification analyses with the following exceptions:

Thermal Analyses

As previously described, the thermal analyses were based on displacements and/or loads to be accommodated by the thermal shield support system as defined by W.

Random Vibration Analyses

The random vibration analyses utilized an ANSYS computer code three-dimensional, full-length, finite-element model of the core barrel and thermal shield similar to that used in the W qualification analyses. Components in the support system were represented by linear springs or by stiffness matrices based on separate detailed ANSYS computer code or hand calculation analyses of the components. In addition, validation of the finite-element model, consideration of hydrodynamic masses, and shell modes considered were the same as in the W analyses.

The previously developed PSDs were applied separately to the inside and outside surfaces of the thermal shield and the resultant responses arbitrarily summed by the SRSS method. The PSD scaling factor was determined in a manner similar to the method used in the W flexure qualification analyses by conservatively correlating the model with actual operating experience. The PSDs were scaled such that fatigue failure in the flexure supports in the existing support system would fail due to FIV loads after 50 effective power months of operation. Peak amplitudes of stresses and/or displacements in the fatigue evaluation were based on a Rayleigh distribution of the responses, as was the case for the W analyses. In addition, for the fatigue evaluation of the bolts in the support system, the ASME Code NG-3232.3(c) stress concentration factor of 4 was used.

Seismic Analyses

In contrast to the extensive finite-element model and the time history inputs used in the W qualification analyses, the O'Donnell evaluation was

based on the simpler FIV analysis model and a response spectrum input. Results of the simplified linear O'Donnell analyses are likely to be more conservative than those from the nonlinear W qualification analyses.

In addition to analyzing the replacement design of the thermal shield support system, the O'Donnell evaluation included a comparison of the existing and the replacement design based on FIV loads only and assessments of potential failures in the replacement design. In all of these analyses, it was conservatively assumed that the displacement limiter keys were worn and, in contrast to the W analyses, a single PSD scaling factor was used in determining the stresses and/or displacements in all of the support system components.

5.7.5 Analysis Results

The O'Donnell independent review concluded that the stresses and displacements in the replacement design were less than in the existing design. Further, the independent review confirmed that for load case 6-0-6, the stresses in the limiting support block bolt due to 7 sigma FIV, thermal, and seismic loadings satisfied the ASME Code design fatigue requirements for a 15 year design life. Thermal loads considered included the POS condition and the seismic load considered was the OBE. Similar to the W analysis, POS stresses were assumed to be 74% greater than the (4 sigma) FIV stresses. The independent review also verified that for these same conditions, the stresses in the flexures did not satisfy the ASME Code design requirements but would not fail on the basis of the same modified ASME Code fatigue criterion that was used in the W analyses.

Other O'Donnell analyses showed that if the two highest stressed flexures failed (load case 4-0-6) or if all the flexures failed (load case 0-0-6) in the replacement design, no further fatigue failures would occur during the 15 year design life.

5.8 NRC Staff's Position Related to the Design and Qualification of the Replacement Thermal Shield Support System

The W analyses demonstrated and the O'Donnell independent evaluation verified

that the thermal shield support system replacement design satisfied the ASME Code, Section III, Subsection NG requirements, with the exception of the fatigue usage factor used for the flexure supports. In this regard, the W analyses and the O'Donnell evaluation showed that fatigue failure of the flexure supports would not occur during the 15 year design life of the support system. The W analyses and the independent O'Donnell evaluation were conservatively based on worst case support system boundary conditions (6-4-6 or 6-0-6 load cases), worst case FIV loadings, and peak rather than RMS stress values during peak random FIV of the thermal shield. In addition, both thermal and seismic loads were considered in the analyses.

The ASME Code criteria conservatively provide an adequate basis for the design and qualification of the thermal shield support system. In addition, comparisons of the critical stresses and/or displacements to be resisted and/or accommodated by elements of the support system demonstrated that the critical stresses and displacements were lower in the replacement support system than in the existing system. The comparisons demonstrated that the replacement support system has been stiffened and strengthened to better withstand the loads induced by FIV of the thermal shield and by the combinations of FIV, thermal, seismic and other loads during the various operating conditions considered.

However, the staff must recognize that the loads considered and their characterization in the dynamic analyses as well as the results of the analyses are subject to some uncertainties: (1) SCE/W did not present data on the environmental effects of radiation and reactor coolant system pressure, temperature, and water chemistry on fatigue over an extended period of plant operation and, (2) although the cause of previous thermal shield support system problems have been reasonably attributed to FIV of the thermal shield, in the event that these problems were caused in part by an unidentified thermal-related phenomenon, stiffening of the support system might exacerbate the problem. In addition, SCE/W expects that progressive degradation is likely to occur even in the replacement support system and recognizes the potential for the recurrence of problems in the replacement support system similar to those experienced in the existing support system. In accepting these uncertainties, the staff credits the licensee's commitment dated July 7, 1990, to continue monitoring

and inspecting the condition of the thermal shield support system. Additionally, with regard to material requirements, the staff has sponsored corrosion testing of the AISI Type 316 material to confirm that the bolted configuration is not susceptible to stress corrosion cracking.

Accordingly, the NRC staff finds that the SONGS-1 thermal shield support system replacement design is acceptable with the following conditions:

(a) Prior to Cycle 12 operation, the licensee must propose and implement Technical Specification requirements for monitoring the condition of the thermal shield during plant operation and for inspecting the thermal shield support system during periods when the plant is shut down.

(b) Results from the corrosion testing of AISI Type 316 SS bolting materials must confirm that the bolted configuration is not susceptible to stress corrosion cracking.

6.0 CLEANLINESS CONTROLS USED DURING DESIGN IMPLEMENTATION

Cleanliness control measures were a major concern for the thermal shield support system replacement work. When similar work was performed at Haddam Neck recently, the licensee failed to implement adequate controls to assure cleanliness. Subsequent to the modification, debris (stainless steel machine chips or flakes) was found in the region between the assembly lower nozzle and the first spacer grid. The accumulated debris resulted in thermal shield support and fuel clad problems during plant operation.

6.1 Specific Cleanliness Control Measures Used at SONGS-1

SCE plans to implement cleanliness control measures to minimize the probability of debris (similar to that which caused fuel damage at Haddam Neck) entering the reactor coolant system. The licensee described the measures being taken to assure that cleanliness is maintained during and following the thermal shield repair work in a letter dated May 24, 1990. The measures described by the

licensee included:

(a) Foreign Material Exclusion (FME) areas will be established prior to opening the reactor vessel. A visual inspection will be performed prior to removal of the fuel and core barrel to assess the as-found condition of the thermal shield support system and lower reactor region.

(b) A fine mesh FME net will be placed over the upper internals while in their designated storage area. The same type of net will be placed over the rod cluster control assembly, change machine, and the new fuel elevator. After all fuel assemblies have been moved to the spent fuel pool, the transfer tube valve and transfer pool gate will be closed establishing double isolation between the reactor cavity and the spent fuel pool.

(c) Four filter systems will be operating during the support system replacement activities to skim debris from the surface of the pool and vacuum designated pool areas: a) plant ion exchangers, b) a temporary 250 gpm pump with pleated 5 micron filters (tri-nuc), c) a Chesterton 200 gpm temporary pump/filter unit with 1 micron filters, and d) a temporary 30 gpm pump and 1 micron filter unit.

(d) A complete 100% visual inspection of the thermal shield supports will be performed after the core barrel has been removed. This will allow inspection of the 0 and 180 degree support blocks, augmenting the visual inspection performed in item a. above.

(e) Upon completion of the reactor vessel inservice inspection, the reactor will be covered with a stainless steel plate to ensure that no foreign material enters the vessel. The cover plate will seal the vessel until support system replacement is completed.

(f) A radiological shield and thermal shield lift mechanism will be installed (prior to commencement of work) covering approximately 95%

of the top of the core barrel. Any remaining open areas will be covered by lead blankets or other protective covers.

(g) The electrical discharge machining (EDM) process removes metal from the workpiece by spark discharge erosion, producing a residue of metal particles. The EDM apparatus includes a vacuum system that draws water from the refueling cavity into and past the cutting tool and then through a 1 micron filter before being pumped back into the cavity. This scheme provides cooling to the tool and workpiece, while sweeping the residue out of the cutting area and into the filter. The filters are inside-to-outside type to ensure particles are captured and maintained during filter changes. Dowel pin holes are reamed to size the holes after the EDM process is completed. A vacuum box will be installed around the reaming tool, continuously drawing debris through the hole and then through a 1 micron filter as discussed in item c. above.

(h) The two inspection port holes being machined above the reactor cavity water level will be surrounded by chip pans so that all generated debris can be collected and removed.

(i) Upon completion of the work activities, the work platform will be cleaned and removed. Then the FME nets will be removed, and the core barrel and upper internals will be cleaned (using the temporary pump/filter units discussed in item c. above and visually inspected).

(j) The reactor vessel cover plate and pool area will be cleaned prior to cover plate removal.

(k) After the cover plate has been removed, the reactor vessel interior and adjoining sections of the hot and cold legs will be cleaned and inspected prior to core barrel/thermal shield installation.

6.2 Staff Position Regarding Cleanliness Control Measures

The NRC staff has reviewed the proposed thermal shield support system replacement plan and the information submitted by the licensee regarding cleanliness control measures. Implementation of the measures described by the licensee should preclude a post-maintenance debris concern, and the staff finds the licensee's actions in this regard to be acceptable.

7.0 RADIOLOGICAL CONTROLS CONSIDERATIONS

The thermal shield and core barrel have been installed in the reactor vessel for approximately 20 years and have become highly radioactive during reactor plant operation. Consequently, repair work associated with the thermal shield and core barrel could result in individuals receiving significantly more radiation exposure than usually anticipated for a normal refueling outage. Title 10 of the Code of Federal Regulations, Part 20.1(c) of Chapter I states, "... persons engaged in activities under licenses issued by the Nuclear Regulatory Commission ... should ... make every reasonable effort to maintain radiation exposures ... as low as is reasonably achievable ..."

7.1 Specific Radiological Control Measures Used at SONGS-1

The licensee provided information pertaining to dose assessments and objectives for maintaining radiation exposures "as low as is reasonably achievable" (ALARA) for the thermal shield support work in a letter dated May 23, 1990. The following information was provided:

(a) Mock-up training will be conducted by licensee personnel at a Bechtel/KWU Alliance facility in Germany prior to project initiation and pre-job briefings will be conducted for all essential personnel.

(b) The licensee has calculated the expected dose rates at various distances from the core thermal shield both during the transfer operation (when the unshielded thermal shield is being moved from the reactor vessel core to its support stand) and when the shielded

thermal shield is positioned on its support stand. Radiation hold points will be used while moving the thermal shield to ensure that the estimated dose rates are not exceeded.

(c) Lead shield walls will be constructed on the operating deck during the thermal shield lift to minimize personnel doses and only essential personnel will have access to the operating deck during this operation.

(d) Radiation detectors with remote readouts will be used to monitor work area and underwater dose rates.

(e) All personnel working near the thermal shield will wear alarming dosimeters.

(f) To minimize airborne radioactivity, the core barrel and lift rig will be kept wet during transfer operations and containment ventilation will be secured to minimize air currents across the operating deck.

(g) In order to reduce the dose rates from the thermal shield, the licensee will place a shield of depleted uranium and lead on top of the thermal shield once it is positioned on its support stand. The refueling water level will also be increased by one foot to provide additional shielding to personnel on the work platform.

(h) During the conduct of thermal shield repair work, four separate water filter systems will be in operation in the reactor cavity to skim the water surface and vacuum debris at designated areas. These will be used to minimize the introduction of hot particles into the pool from the grinding operations and to maintain water clarity and purity.

(i) Before removal from the refueling cavity, all tooling will be sprayed underwater to remove contaminants and then monitored using underwater

detectors. Shielded containers will be used to remove radioactive tools and debris from the containment.

(j) The licensee has performed a detailed person-rem analysis for the thermal shield repair activities. This analysis is based on experience gained during the thermal shield repair work at Connecticut Yankee (Haddam Neck) as well as previous outage work performed at SONGS-1. The licensee estimates that the thermal shield repair project will take 60 days to complete and will result in a total of approximately 88 person-rems. The licensee arrived at this figure by dividing the work area into five separate radiation zones, and estimating the number of people and time spent in each radiation zone for each phase of the operation. The licensee plans to use the minimum number of personnel necessary to perform the job, use long-handled tools where possible, and provide low dose rate waiting areas to minimize personnel doses.

7.2 Staff Position Regarding Radiological Controls

The NRC staff has reviewed the proposed thermal shield support system replacement plan and the information regarding ALARA considerations. The staff finds the licensee's dose estimates for this job to be acceptable based on the magnitude of the job to be performed. The licensee is using an experienced work force to perform the thermal shield modification work and has implemented a number of dose reduction features to ensure that the job doses are ALARA. Therefore, the NRC staff finds the licensee's actions with regard to ALARA considerations to be acceptable.

8.0 LICENSE CONDITION 3.M - THERMAL SHIELD MONITORING REQUIREMENTS

During the Cycle 10 San Onofre Nuclear Generating Station (SONGS) Unit 1 refueling inspection, it was found that the thermal shield supports were degraded. Evaluation of the inspection results demonstrated that the plant could be operated safely during Cycle 10. Nevertheless, the staff required the licensee to establish surveillance requirements for assessing performance of

the thermal shield supports via neutron noise and acoustical noise (loose parts) monitoring. The surveillance requirements were incorporated into License Condition 3.M which was reviewed and approved by the staff for Cycle 10 operation.

During the current Cycle 11 refueling outage, the licensee is replacing the existing components which provide support for the thermal shield. The replacement components are similar to the original ones, but certain design details have been modified to improve performance. In order to address the uncertainties discussed in Section 5.8 of this SE, continued monitoring of the thermal shield during plant operation will be required. Therefore, by letter dated April 20, 1990, the licensee requested that the NRC review and approve a proposed revision to License Condition 3.M which would continue the thermal shield monitoring program for Cycle 11 operation. Additionally, by letter dated July 7, 1990, the licensee committed to propose a change to the Technical Specifications to include requirements for a permanent thermal shield monitoring program for operation beyond Cycle 11.

8.1 Evaluation

The thermal shield monitoring program which has been proposed for Cycle 11 operation is similar to the program that was required for Cycle 10 operation. Neutron noise signals obtained from the excore detectors and acoustical noise signals obtained from accelerometers mounted in the reactor vessel upper flange area will be used to monitor the condition of the thermal shield.

The neutron noise signals will be processed for power spectral density, cross power spectral density, phase and coherence. Baseline values for these quantities will be established by analyzing at least 16 data segments of 20 minutes each during the first 60 days of Cycle 11 operation with reactor power level greater than or equal to 85%. Because the frequency range of interest is in the area of 8-10 Hz, the 20 minute duration will yield 9,600 to 12,000 samples which provides a good statistical basis. Therefore, the proposed method for establishing baseline values is acceptable.

The noise pattern and amplitude of the acoustical noise signals will be analyzed and baseline values will be established in the same manner as was described for the neutron noise signals. The existing loose-parts monitoring system satisfies the Regulatory Guide 1.133 criteria for signal response sensitivity, but the acoustical detectors (accelerometers) are not optimally located for detecting loose parts from the thermal shield support structure and it is not likely that degradation of the thermal shield supports will be identified by acoustical monitoring per se. However, in the unlikely event that loose parts from the thermal shield supports are lifted up and impact the flow distribution plate or core support plate over a prolonged period of time, degradation of the support structure may be detected by acoustical monitoring. Therefore, the benefit of using the existing loose-parts monitoring system is marginal. Because significant degradation of the thermal shield support structures is not expected to occur for some period of time following the repairs, use of the existing loose-parts monitoring system as described in the proposed revision of License Condition 3.M is acceptable for Cycle 11 operation. For continued operation beyond Cycle 11, enhancements will be required such that acoustical monitoring will be more likely to detect loose parts originating from the thermal shield support structures.

After baseline values have been established for neutron noise and acoustical noise monitoring, the licensee will define specific acceptance criteria which will be used to judge the condition of the thermal shield. Any deviations observed in the neutron noise and acoustical noise signals when compared to the established baseline values will reflect changes in thermal shield performance (References 20 and 21). The monitoring and reporting requirements specified by License Condition 3.M for Cycle 11 operation are the same as the requirements that were specified for Cycle 10 operation and are acceptable to the staff, with the following contingencies:

(a) In developing the specific acceptance criteria for neutron noise and acoustical noise monitoring, the licensee must identify specific frequency ranges and amplitude changes that would correspond to the various postulated failures that could occur relative to the thermal shield support structures.

(b) The licensee must submit its final neutron noise and acoustical noise monitoring acceptance criteria, identifying the specific frequency ranges and amplitude changes discussed in (a) above and the basis for the criteria, for NRC review and approval within 120 days of returning the unit to service.

The proposed License Condition for Cycle 11 operation does not include a requirement to develop interim acceptance criteria for monitoring the thermal shield pending development of final acceptance criteria, which was the case for Cycle 10 operation. Because the plant will be returned to service with no known deficiencies associated with the thermal shield support structures, the staff considers this to be acceptable.

8.2 Staff Position Regarding Thermal Shield Monitoring Requirements

The NRC staff has reviewed proposed License Condition 3.M for Cycle 11 operation of San Onofre Unit 1, which defines the thermal shield neutron and acoustical noise monitoring requirements. Based on the considerations discussed in this evaluation, the staff finds the proposed License Condition to be acceptable subject to staff review and approval of the final neutron noise and acoustical noise monitoring acceptance criteria. Also, as we discussed in our evaluation, acoustical noise monitoring capabilities must be significantly improved for operation beyond Cycle 11.

9.0 SUPPLEMENTARY INFORMATION PROVIDED BY THE LICENSEE

The licensee's original request dated April 20, 1990, was supplemented by letters dated May 24, June 8, July 7, July 12, July 27, August 28, August 31, October 19, and by two letters dated November 29, 1990. This additional information was provided to address specific details related to the thermal shield support system replacement design or to respond to staff requests for information, and did not alter the action that was originally requested by the licensee. Therefore, it was not necessary for the staff to renotice this action.

10.0 ENVIRONMENTAL CONSIDERATION

This amendment involves changes in the installation or use of a facility component located within the restricted area as defined in 10 CFR Part 20. The staff has determined that the amendment involves no significant increase in the amounts, and no significant change in the types, of any effluents that may be released offsite and that there is no significant increase in individual or cumulative occupational radiation exposure. The Commission has previously issued a proposed finding that this amendment involves no significant hazards consideration and there has been no public comment on such finding. Accordingly, this amendment meets the eligibility criteria for categorical exclusion set forth in 10 CFR 51.22(c)(9). Pursuant to 10 CFR 51.22(b) no environmental impact statement or environmental assessment need be prepared in connection with the issuance of this amendment.

11.0 CONCLUSION

Based on the considerations discussed in this Safety Evaluation, the NRC staff has determined that the thermal shield support system replacement design proposed by the licensee is acceptable and that the proposed revision to License Condition 3.M is also acceptable, with the following conditions:

(a) Additional evaluation of the thermal shield support system analytical model is required, taking into consideration the Cycle 11 outage as-found conditions. Any changes to the analytical model as a result of this evaluation must be assessed in terms of the thermal shield support system design (SE Section 4.4).

(b) Failed fasteners that were removed from the support system must be examined in detail to determine the root cause of fastener failure (SE Section 4.4).

(c) Prior to Cycle 12 operation, the licensee must propose and implement Technical Specification Requirements for monitoring the condition of the thermal shield during plant operation and for inspecting the

thermal shield support system during periods when the plant is shut down (SE Section 5.8).

(d) Results of corrosion testing of AISI Type 316 SS bolting materials must confirm that the bolted configuration is not susceptible to stress corrosion cracking (SE Section 5.8).

(e) In developing the specific acceptance criteria for neutron noise and acoustical noise monitoring, the licensee must identify specific frequency ranges and amplitude changes that would correspond to the various postulated failures that could occur relative to the thermal shield support structures (SE Section 8.1).

(f) The licensee must submit its final neutron noise and acoustical noise monitoring acceptance criteria, identifying the specific frequency ranges and amplitude changes discussed in (e) above and the basis for the criteria, for NRC review and approval within 120 days of returning the unit to service (SE Section 8.1).

(g) Acoustical noise monitoring capabilities must be significantly improved for operation beyond Cycle 11 (SE Section 8.1).

The NRC staff has also concluded, based on the considerations discussed in this Safety Evaluation, that: (1) there is reasonable assurance that the health and safety of the public will not be endangered by operation in the proposed manner, and (2) such activities will be conducted in compliance with the Commission's regulations, and the issuance of this amendment will not be inimical to the common defense and security or to the health and safety of the public.

Principal Contributors:
W. Chen (ETEC)
D. Terao
J. Rajan
C. Sellers
C. Hinson
L. Lois
R. Wharton
J. Tatum

Dated: December 19, 1990

REFERENCES

1. W report WCAP-12148, "Engineering Evaluation of the SONGS-1 Thermal Shield Supports," February, 1989.

2. W report, "Thermal Shield Support System Design and Replacement Plan; San Onofre Nuclear Generating Station, Unit 1."

3. SMC O'Donnell report, "Engineering Evaluation of Thermal Shield Repair," July 1990.

4. S. Fabic, "Investigation of Methods for Coupled Structural Hydrodynamic Analysis of Reactor Internals," Proceedings of the Conference on Flow-Induced Vibrations in Reactor System Components, ANL-7685, pp. 290-303.

5. W Report WCAP-7879, "Four Loop PWR Internals Assurance and Test Program," N.R. Singleton et al, July 1972.

6. W Report SSDC 1.3, Rev. 1, "Systems Standard Design Criteria - Nuclear Steam Supply System Design Transients," April 2, 1971, R.K. Lindefelt.

7. W Report SSDC 1.3, Rev. 2, "Systems Standard Design Criteria - Nuclear Steam Supply System Design Transients," April 15, 1974, W.R. Snyder.

8. W Report WCAP-11947, Rev. 0, "Structural Analysis of San Onofre Unit 1 Steam Generator 'B' Feedwater Nozzle with Deformed Thermal Sleeve," September 1988, R.A. Taylor and A.L. Thurman.

9. Updated Final Safety Analysis Report - San Onofre Nuclear Generating Station Unit 1, Southern California Edison Company/San Diego Gas and Electric Company, dated February 28, 1990.

10. SCE E-Spec 569259, Rev. 4, "SCE Project Reactor Vessel," L.R. Katz/H.J. Von Hollen, May 14, 1964 (Original Issue Data: January 23, 1961).

11. W Report WCAP-8303, "Prediction of the Flow-Induced Vibration of Reactor Internals by Scale Model Tests," H. Lee, March, 1974.

12. R.E. Peterson, "Stress Concentration Factors," Wiley, 1974.

13. ASME Boiler and Pressure Vessel Code Section III Subsection NG "Core Support Structures," 1986 Edition.

14. M.J. Manjoine and E.I. Landerman, "Techniques for Fatigue Testing and Extrapolation of Fatigue Life," ASTM Symposium, Design of Fatigue and Fracture-Resistant Structures, November 1980.

15. B. Branneman and J.Q. Talley, "RMS Fatigue Curves for Random Vibrations," Transactions of the ASME, Journal of Pressure Vessel Technology, Vol. 108, November 1986, pp. 538-542.

16. J.C. Simonis and D.E. Thoren, "Structural Response of Reactor Internal Components During Operational Tests," ASME Special Publications, PVP-39, 1979.

17. M.K. Au-Yang and K.B. Jordan, "Dynamic Pressure Inside a PWR - A Study Based on Laboratory and Field Tests Data," Nuclear Engineering and Design, Vol. 58, 1980.

18. M.K. Au-Yang, "Response of Reactor Intervals to Fluctuating Pressure Forces," Nuclear Engineering and Design, Vol. 35, 1975.

19. S.T. Green, J.C. Simonis, "Flow Modeling Around the Thermal Shield," Appendix to SMC O'Donnell report, "Engineering Evaluation of Thermal Shield Repair."

20. Letter from R. Kryter, ORNL, to L. Lois, NRC, "Review and Evaluation of Neutron Noise Signatures Acquired at San Onofre Unit 1 as Specified by Licensing Condition 3.M," dated August 21, 1990.

21. NP-4970, "Utility Guidelines for Reactor Noise Analysis" by F.J. Sweeney for the Electric Power Research Institute, February 1987.