NON-PROPRIETARY

THERMAL SHIELD SUPPORT SYSTEM DESIGN

AND

REPLACEMENT PLAN

SAN ONOFRE NUCLEAR GENERATING STATION, UNIT 1

TABLE OF CONTENTS

I. BACKGROUND

Westinghouse Electric Co. informed SCE in late 1987 that degraded reactor vessel thermal shield supports had been discovered at the Haddam Neck plant. As a result of that information, during the Cycle 10 refueling outage, the SONGS 1 thermal shield was visually inspected. The inspection found that five of the six flexures were broken (four were known to be broken from prior inspections), and three of thirty support block bolts were degraded. One dowel pin in a lower support block was also found to have a broken tack weld. No other damage was found. The inspection results were evaluated and it was demonstrated that safe operation of the reactor was not impacted by the existing thermal shield condition.

On July 31, 1989, the plant was returned to service. However, as a condition to continue operation, the NRC required SCE to implement a program to monitor the condition of the thermal shield during Cycle 10 operation. SCE responded by instituting weekly monitoring using signals from the Nuclear Instrumentation System and from a set of four accelerometers mounted on the vessel flange. In addition, SCE committed in a letter dated October 6, 1989, to replace thermal shield supports during the Cycle 11 refueling outage scheduled to begin no later than June 30, 1990.

II. EXISTING THERMAL SHIELD DESIGN

The thermal shield surrounds the reactor core barrel. It is fabricated from stainless steel, is 2 1/2 inches thick, has an outer diameter of 134 inches, is 163 inches in length, and weighs approximately 48,000 lbs. The thermal shield is supported at the bottom by six stainless steel blocks located at 60° intervals around the circumference. The support blocks attach the thermal shield to the core barrel. At the top of the thermal shield, six flexures attach the shield to the core barrel while accommodating differential vertical expansion between the shield and barrel. Additionally, four "limiter" keys located 11 inches below the top of the thermal shield allow vertical movement while restraining radial motion between the thermal shield and core barrel. (See Figure 1.)

III. REVISED THERMAL SHIELD SUPPORT SYSTEM DESIGN

A. Current Support Configuration

The core barrel is suspended at its upper end by a flange (See Figure 2). The thermal shield is concentric about the core barrel and is attached to the core barrel at its lower end by six lower support blocks. To minimize differential radial and tangential motion, the core barrel and thermal shield are also attached at the upper end of the thermal shield by six flexures. The flexures are designed to accommodate vertical thermal growth between the core barrel and the thermal shield, while restraining radial and

tangential motions. Four limiter keys and keyways are also located at the top of the thermal shield to limit radial motion.

The root cause of the damage in the thermal shield upper and lower supports has been evaluated by Westinghouse Electric Company and SCE. It is our joint conclusion that degradation of the lower support block bolts was due to high cycle fatigue resulting from flow induced vibrational (FIV) loads at the lower supports. The vibrational loading is believed to have been exacerbated by flexure failures and wear at the four limiter keys. The failure of the flexures has also been attributed to high cycle fatigue due to FIV loads.

B. Revised Lower Support Design

Analysis performed by Westinghouse showed that the design of the thermal shield lower support system could be improved by the addition of strength and stiffness in the lower support block structure. This is being accomplished by incorporating the following changes in the support block design (See Figure 3):

- The new blocks will be 11 inches wide versus 8 inches in the existing design. This more than triples the contact area between the thermal shield and the support blocks thereby increasing the efficiency of the joints.
- On the six support blocks, the number of bolts will increase from five to seven. The number of dowel pins in each block will also increase from four to five.
- The total cross sectional area of the bolts will increase by more than 75%.
- The total cross sectional area of the dowel pins will increase by more than 150%.
- The dowel pins will be designed for an interference fit.
- The dowel pins and bolts will be restrained by either a locking nut or a deformed head (See Figure 3, 4, and 5).

C. New Flexure Design

As previously discussed, failure of the flexures has been attributed to high cycle fatigue due to FIV loads in combination with several other factors. This conclusion is based on evaluations performed on failed flexures at a similar Westinghouse plant and visual inspections made on Unit 1. Cracks in the Unit 1 flexures have been observed at the flexure bend radius, a location of high stress. Flexure failures at the other Westinghouse plant occurred at a similar location. It is believed that the large material grain size at the flexure fracture location contributed to

the flexure failures at both Unit 1 and the other Westinghouse plant. A large grain size tends to reduce the fatigue strength of the material.

The new design will incorporate the following revisions to improve the flexures:

- The flexures will either be fabricated in one piece or pieces will be welded in areas with lower stress concentration.
- The design will include a preload on the web portion of the flexure (See Figure 7) to minimize mean stresses at operating temperatures and power levels.
- The geometry of the flexure region will be improved to reduce stresses due to radial and tangential loading.
- All welded connections to the thermal shield will be replaced by bolted/dowel pin fasteners. (See Figures 6 and 7).
- One of the six flexure locations will be moved to reduce the loading on the highest loaded flexure.

D. Limiter Key Design

Evaluations of the limiter key suggest that wear will occur at the interface surfaces and for this reason loading conditions which produce small displacements at the top of the thermal shield will be evaluated without taking credit for the keys. However, the limiter keys will be considered for loading conditions that could produce large displacements at the top of the shield (e.g., faulted seismic conditions). Therefore, for increased radial support at the top of the shield during abnormal events, the original four limiter keys will be replaced. The detailed design of the replacement limiter key will remain similar to the original. The new design will be bolted rather than welded and the clearance gap will be reduced. The old keyway will be reconditioned prior to the new keys being installed.

IV. DESIGN ANALYSIS

The analysis of the design for the SONGS 1 thermal shield support replacement will cover the support system and adjacent components. The lower support system is composed of 6 support blocks, each with 7 bolts and 5 dowel pins (except for the 0 degree block which has 6 dowel pins due to geometry constraints). The upper support system is composed of 6 flexures and 4 limiter keys. Adjacent components are the core barrel and the thermal shield.

The intent of the analyses is to satisfy the design requirements of the ASME code for the following loading conditions:

1. Dead weight
2. Thermal loads
3. Pressure loads
4. Flow Induced Vibrational (FIV) loads
5. Seismic loads
6. Bolt preload

As discussed in the letter of July 25, 1989, C. M. Trammel (NRC) to K. P. Baskin (SCE) regarding postulated pipe breaks in primary coolant loop piping, SONGS 1 satisfies the conditions specified in Generic Letter 84-04 "Safety Evaluation of Westinghouse Topical Reports Dealing with the Elimination of Postulated Pipe Breaks in PWR Primary Main Loops." Therefore, consideration of dynamic effects associated with postulated pipe ruptures of the primary coolant loop piping is not required for SONGS 1.

A. Description of Methodology

The degradation of the SONGS 1 thermal shield support system has been attributed to FIV loads resulting in high cycle fatigue failures of the lower support block bolts and flexures. For the bolts, this conclusion is based on previous work performed during the Cycle 10 outage that established the history of degradation of the lower support block bolts. The conclusion that the flexure failures were caused by FIV loads is based on the evaluations of flexure failures completed in the early 1970's for another Westinghouse plant of a similar design to SONGS 1.

Parametric FIV evaluations were performed to determine the sensitivity of support stiffness and location changes on the resulting loads and displacements at the upper and lower supports. FIV pressure loads due to random (turbulent) excitations were applied to a three-dimensional finite element model of the core barrel and thermal shield. The model was used to develop displacements and loads at the lower and upper support systems for various modes of vibration. The design for the SONGS 1 thermal shield support system was selected based upon the results of this parametric study of loads and displacements. The improved design consists of 6 lower support blocks, 6 flexures, and 4 upper limiter keys and is intended to satisfy ASME Code requirements.

Types of Loads

The following loads will be accounted for in the design of the SONGS 1 thermal shield support replacement:

1. Dead weight
2. Thermal loads
3. Pressure loads
4. Flow Induced Vibrational (FIV) loads
5. Seismic loads
6. Bolt preload

Dead weight

The effects of dead weight acting on the lower and upper support system will be included in the analysis.

Thermal Loads

Thermal loadings acting on the lower and upper support system and the effects on adjacent components due to gamma heating, steady state thermal conditions, and thermal transient conditions will be included in the qualification of the design for the thermal shield support replacement.

Pressure Loads

The steady state pressure loads acting on the thermal shield will be accounted for in the evaluation of the lower and upper supports and on adjacent components.

Flow Induced Vibration (FIV) Loads

The following mechanisms were considered to be potentially important influences in producing the degraded condition observed in the existing thermal shield supports:

1. Vortex shedding from the trailing edge of the thermal shield.
2. Fluidelastic instability.
3. Random (turbulent) excitation.

Vortex shedding was considered important since industry technical journals have identified vortex shedding as a viable mechanism for the excitation of thermal shield vibration modes. In addition, data has shown the presence of some higher order thermal shield vibration modes at frequencies approximately equal to the trailing edge vortex shedding frequencies. To address this issue, an acoustic model of the fluid on both sides of the thermal shield was created. The model was used to calculate acoustically induced pressure differences across the thermal shield for typical trailing edge vortex shedding frequencies. A delta p-type forcing function was used to simulate the vortex shedding process.

The results of the analysis showed that the thermal shield pressure differences induced by the vortex shedding mechanism were very low ($\leq$ 0.1 psi) and were limited to the region near the trailing edge. The localized nature of the pressure differences stems from the fact that the acoustic mode frequencies of the thermal shield region were substantially higher than both the trailing edge vortex shedding frequency and the thermal shield mode frequencies.

The above results and consideration of other factors eliminated vortex shedding as a concern. The other factors considered include: i) the small flow channel width between the core barrel and thermal shield relative to the thermal shield thickness, ii) the low probability of obtaining thermal shield vibration amplitudes large enough to correlate the shed vortices, and iii) the fact the vortex shedding frequencies are sufficiently higher than the thermal shield mode frequencies to preclude "lock-on."

An evaluation of the fluidelastic stability limits of the SONGS 1 thermal shield due to axial flow in the downcomer was performed. The evaluation focused on current cycle operation with degraded thermal shield lower blocks. The investigation found that both static and dynamic stability are assured even if all of the bolts in the 6 support blocks were degraded. While vibration amplitudes may be significant for the degraded condition, they virtually disappear as a concern once the effective rotational stiffness of the thermal shield system approaches 25-50 times the static stability limit. This level of stiffness is achieved in the improved design.

Because trailing edge vortex shedding was eliminated as a concern and fluidelastic effects only become important in a severely degraded condition, the vibration analysis was reduced to considering the effects of random or turbulent excitations.

Seismic

Seismic loading will be included in the design of the thermal shield support system. The San Onofre Design Basis Earthquake Spectra used at the reactor vessel supports is commonly referred to as the 0.67g modified Housner Earthquake.

Bolt Preload

The torque applied to the bolts during installation will be converted to a range of bolt preload values based on torque coefficients obtained from existing test data.

Load Combinations

The following load combinations will be considered in the evaluation of the improved design.

Normal and Upset Conditions (level A and B)

1. Dead weight + Pressure + FIV

2. Dead weight + Pressure + Seismic + FIV

3. Dead weight + Pressure + Thermal + FIV

4. Dead weight + Pressure + Seismic + Thermal + FIV

The bolt preload will be considered for the evaluation of secondary stresses and fatigue of the bolts.

Faulted Conditions (level D)

1. Dead weight + Pressure + Seismic

B. Types of Analyses

The types of analyses that will be performed to qualify the design for the thermal shield support replacement include:

1. Generation of loads and/or displacements at the lower and upper support locations for the design loads identified above.

2. Evaluation of these loads for primary stress, primary and secondary stress, and low and high cycle fatigue of the components of the lower and upper support system and adjacent components.

The loads/displacements acting at the lower and upper supports will be calculated using both finite element methodology and closed form, hand calculations.

Flow Induced Vibration Analysis

A three-dimensional finite element model representing the SONGS 1 core barrel, thermal shield, and the upper and lower support systems was developed for the determination of FIV loads at the support locations. This model was used to determine the natural frequencies, eigenvectors, and modal stiffnesses of the thermal shield-core barrel structure. The finite element model was used to perform a turbulent vibration analysis using various pressure spectral density (PSD) forcing functions. PSD's investigated included: theoretical, random vibration formula, and normalized through comparisons of predicted and measured modal amplitudes for a reference plant. These forcing functions were scaled to the SONGS 1 conditions and used in conjunction with the modal results to determine the vibrational response of the core barrel and thermal shield. Forces in the support block bolts and the displacements of the flexures and the limiter keys were determined based upon these results.

Thermal Analysis

The geometric node locations defined for the finite element model of the core barrel and thermal shield discussed previously will also be used in the thermal analysis. Heat generation rates for

the core barrel and thermal shield in the region of the core will be input to the model and fluid temperatures applied to the surfaces of the core barrel and thermal shield. The model will then be used to calculate the temperature distributions in the core barrel and thermal shield. The resultant temperature profiles will be used to determine relative displacements between the two components. The model will also produce the forces at the support locations due to the relative thermal motion between the core barrel and the thermal shield, as well as, stresses in the core barrel and thermal shield.

Seismic Analysis

To verify the structural adequacy of the SONGS 1 reactor pressure vessel (RPV) and its internals under seismic loadings, nonlinear time history dynamic analyses will be performed. The results of these analyses include time history displacements and component loads of the RPV system.

The mathematical model of the RPV system will be a three-dimensional nonlinear finite element model which represents the dynamic characteristics of the reactor vessel and its internals in six degrees of freedom. The model will consist of three concentric structural submodels connected by nonlinear impact elements and stiffness and mass matrices. The model will be developed using the WECAN (Westinghouse Electric Computer Analysis) computer code which employs NRC approved methodologies for nonlinear time history analysis.

Once the loads have been calculated at the support locations, stresses in the support components will be evaluated. Wherever possible these evaluations will be correlated against historical plant data. Finally, a comparison between the original design and the improved design will be completed to confirm the adequacy of the new support system.

C. Criteria and ASME Code Requirements

Stress evaluations will be performed in accordance with the requirements of the 1986 Edition, Section III, Subsection NG of the ASME Boiler and Pressure Vessel Code whenever possible. Justification of alternative qualification methods will be provided if the requirements of the ASME Code can not be met for a particular component.

The applicable Paragraphs of Section III, Subsection NG, of the ASME Boiler and Pressure Vessel Code for the structural evaluations are as follows:

NG-3110, Loading Criteria

NG-3200, Design by Analysis

Specifically:

NG-3210, Design Criteria

NG-3220, Stress Limits For Other Than Threaded Structural Fasteners
- NG-3221, Design Loadings
- NG-3222, Level A Service Limits
- NG-3223, Level B Service Limits
- NG-3224, Level C Service Limits (if applicable)
- NG-3225, Level D Service Limits
- NG-3227, Special Stress Limits
- NG-3228, Applications of Plastic Analysis
- NG-3229, Design Stress Values

In addition to the values referenced by this paragraph, Code Case N-60 will also be used for some materials.

NG-3230, Stress Limits For Threaded Structural Fasteners
- NG-3231, Design Conditions
- NG-3232, Level A Service Limits
- NG-3233, Level B Service Limits
- NG-3234, Level C Service Limits (if applicable)
- NG-3235, Level D Service Limits

NG-3300, Core Support Structure Design
- NG-3310, General Requirements
- NG-3320, Design Requirements
- NG-3350, Design for Welded Construction

D. Base Design Case

The base design for the replacement of the thermal shield supports is six lower support blocks, six flexures and four limiter keys. While this support system is similar to the original support system, improvements have been incorporated into the design of each of the three component types.

Four new limiter keys will replace the original limiter keys. The new keys will aid in reducing the relative radial motion between the thermal shield and core barrel. As a result, the FIV loads on the lower supports and upper flexures will be reduced once the new support system is implemented. The limiter keys will also provide additional support at the top of the thermal shield during accident conditions.

Based on the SONGS 1 operating experience and that of a similar plant with this type of limiter key design, some wear is expected to occur. Therefore, wear of the four limiter keys will be considered during the evaluation of the upper and lower thermal shield supports.

E. Limiter Key Wear

The limiter keys are equally spaced around the circumference of the thermal shield. The keys attach to the core barrel through clevises located at the upper core plate elevation. The limiter keys fit into the tight radial gap between the front face of the key and the back face of the clevis. The purpose of the keys is to reduce relative radial motion between the thermal shield and core barrel.

Experience has shown that wear at the key-to-clevis interface is possible. Therefore, evaluations of the lower support system (bolts, blocks, and dowel pins), upper support system (flexures) and adjacent components (core barrel and thermal shield) will consider the effects of worn keys. The maximum wear of the limiter keys will be calculated based on the predicted peak FIV displacement amplitudes at the top of the thermal shield relative to the core barrel with the flexures intact.

For the load cases that are expected to produce small relative displacements between the top of the thermal shield and core barrel (e.g., FIV and thermal loads) the limiter keys will be omitted from the evaluation to study the effect of worn keys. For load cases that are expected to produce large displacements at the top of thermal shield (e.g., seismic loading) the evaluations will include the structural support provided by the keys.

V. SURVEILLANCE CAPSULE SPECIMEN BASKETS

The thermal shield support tubes that hold vessel material specimens for irradiation and periodic analysis will be cut, and a seven inch section removed, to allow lifting of the thermal shield during the support system replacement process. Westinghouse will provide a design to reinstall the specimen baskets needed for future surveillance.

VI. THERMAL SHIELD SUPPORT SYSTEM REPLACEMENT PROCESS

The installation of the new thermal shield support system will be performed by the Bechtel/KWU Alliance. The design of the replacement components will include consideration of the limitations of the methods and tooling available for the replacement. A brief description of the replacement program follows. Additional details are included in the Enclosure.

Inspection and Core Barrel Removal

Following removal of the vessel head and upper internals, an as-found inspection will be completed prior to fuel movement. This will be performed to ensure that removal of the core barrel can be accomplished and no problems exist. After removal of the fuel assemblies, the core barrel and thermal shield will be removed from the reactor vessel and

placed on a new stand within the refueling cavity. The stand will have the capability of rotating the core barrel to facilitate performing work at different locations simultaneously. A platform and control station will be erected above the refueling cavity above the core barrel to provide up to two remote tooling work stations. The additional load on the cavity floor has been evaluated and found acceptable without the need for additional shoring or other changes to the existing design. Once the core barrel is removed from the reactor vessel and the 10 year ISI is complete, a reactor cover plate will be installed on the reactor vessel. This plate will keep any foreign material from entering the vessel. The existing material specimen capsules will be removed and stowed within the cavity.

Thermal Shield Support System Replacement

The replacement work will involve electric discharge machining (EDM) tooling and water operated hydraulic positioners and jacks. The replacement work sequence will begin with an as-found inspection and removal of the flexures. Hydraulic jacks will then be positioned and locking legs engaged to support the thermal shield while the existing lower support blocks are being removed. Confirmatory measurements will be made for location and dimensioning of the replacement parts prior to the lifting of the thermal shield. Next, the existing limiter keys will be removed, and the specimen capsule guide tubes cut to allow movement of the thermal shield. The thermal shield will be lifted approximately 7 inches to allow removal and replacement of the old support blocks. The thermal shield will then be lowered and fastened to the new support blocks and the core barrel.

The upper limiter key areas will be measured, parts final machined based upon the in situ dimensional measurements, and the limiter keys installed. The top of the thermal shield will next be machined to accept the new flexures. The new flexures will then be installed. Inspection ports will also be machined into the core barrel flange to facilitate future inspections of the various supports when the core barrel is in the reactor vessel. The new inspection ports, along with the existing four 3 inch diameter lifting holes, will enable a complete inspection of the thermal shield supports. A final inspection will be performed and as-left photographs and a video record will be taken. See the Enclosure for a detailed description of the support system replacement operations.

Other Inspections

While the thermal shield is in the raised position and the lower support blocks have been removed, the following inspections will be performed:

a. Visual inspection of each of the six areas where the support blocks attach to the core barrel.

b. Ultrasonic examination of the corners of the machined grove area of the core barrel where the six support blocks were attached. This

UT will be performed from the outside of the core barrel since access from the inside is restricted.

c. A 100% inspection of the core barrel to lower support weld will be performed in accordance with, and as part of, the in-service inspection program, during the Cycle 11 refueling outage.

d. Prior to reassembly of the reactor, a complete cleaning and inspection of the reactor, core barrel and upper internals will be performed.

IX. FUTURE THERMAL SHIELD INSPECTIONS

During the thermal shield support system replacement process, additional inspection ports will be added to the core barrel flange. These inspection ports will allow future visual inspections by providing camera access through the upper flange of the core barrel when the barrel is in the reactor vessel. The planned inspections during the Cycle 12 refueling, with the core barrel in the vessel are as follows:

a. Visually inspect the six upper flexures.

b. Visually inspect the four upper limiter keys.

c. Visually inspect the six lower supports.

d. Visually inspect a representative sample of the remaining surveillance capsule specimen baskets (e.g., two of the remaining five baskets).

e. Ultrasonically examine the lower support block fasteners for all six support blocks.

f. Visually inspect the lower head region of the reactor vessel for debris.

This inspection plan in conjunction with the continuation of the thermal shield monitoring program will enable the condition of the thermal shield to be assessed in the future without removal of the core barrel.

After the Cycle 12 refueling, thermal shield inspection will be performed as part of the 10 year ISI program.

SONGS UNIT 1 REACTOR VESSEL THERMAL SHIELD SUPPORT REPLACEMENT SCOPE

[ ] g

SCE

FIGURE 1

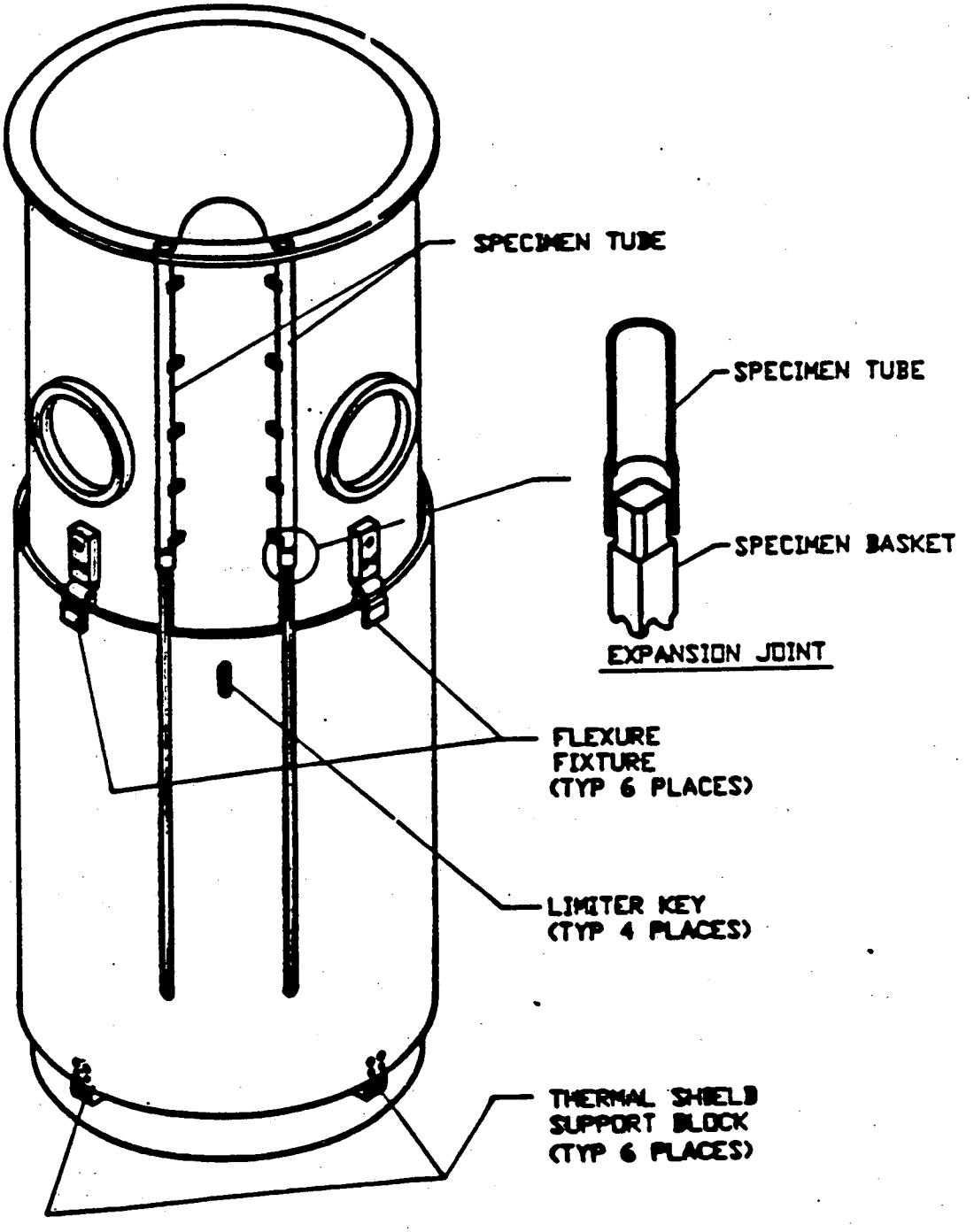
SPECIMEN TUBE
SPECIMEN TUBE
SPECIMEN BASKET
EXPANSION JOINT
FLEXURE
FIXTURE
(TYP 6 PLACES)
LIMITER KEY
(TYP 4 PLACES)
THERMAL SHIELD
SUPPORT BLOCK
(TYP 6 PLACES)

FIGURE 2

SCE

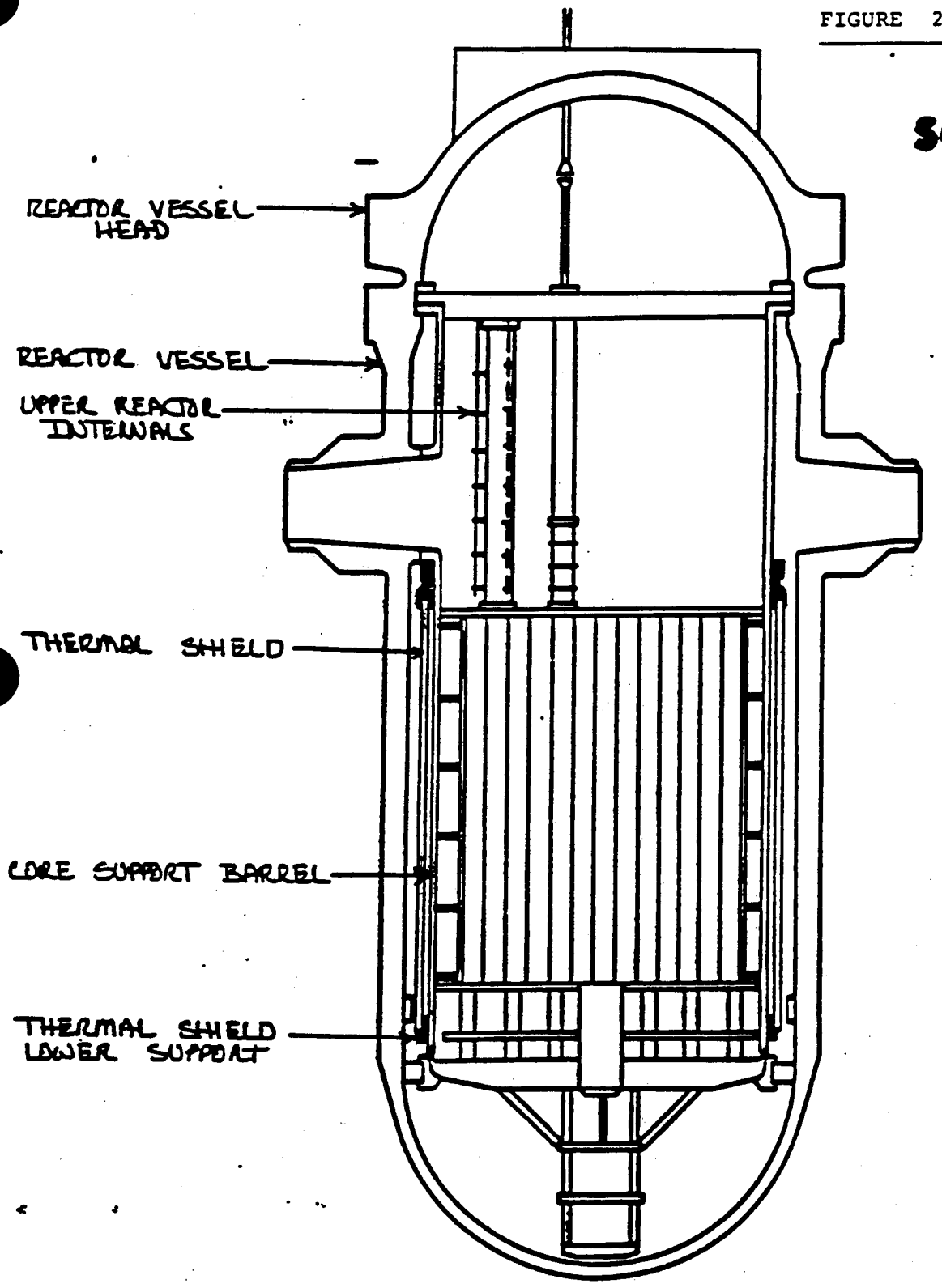

San Onofre Reactor Internals

SONGS 1 THERMAL SHIELD REPAIR
LOWER SUPPORT BLOCK

FIGURE 3

a, c, g

FIGURE 4

BOLT TWIST LOCKING SYSTEM

FIGURE 5

THREADED PLUG LOCKING DEVICE

SONGS 1 THERMAL SHIELD REPAIR
REPLACEMENT FLEXURE

FIGURE 6

a,c

SONGS 1 THERMAL SHIELD REPAIR
REPLACEMENT FIXTURE

a,c

FIGURE 7

PROPRIETARY INFORMATION

NOTICE

THE ATTACHED DOCUMENT CONTAINS OR IS CLAIMED TO CONTAIN PROPRIETARY INFORMATION AND SHOULD BE HANDLED AS NRC SENSITIVE UNCLASSIFIED INFORMATION. IT SHOULD NOT BE DISCUSSED OR MADE AVAILABLE TO ANY PERSON NOT REQUIRING SUCH INFORMATION IN THE CONDUCT OF OFFICIAL BUSINESS AND SHOULD BE STORED, TRANSFERRED, AND DISPOSED OF BY EACH RECIPIENT IN A MANNER WHICH WILL ASSURE THAT ITS CONTENTS ARE NOT MADE AVAILABLE TO UNAUTHORIZED PERSONS.

COPY NO. _____

DOCKET NO. _____

CONTROL NO. _____

REPORT NO. _____

REC'D W/LTR DTD. _____

PROPRIETARY INFORMATION