WYLE LABORATORIES
SCIENTIFIC SERVICES AND SYSTEMS GROUP
WESTERN OPERATIONS, NORCO FACILITY
1841 HILLSIDE AVENUE, NORCO, CALIF. 91760

REGULATORY DOCKET FILE COPY

test REPORT

TEST REPORT

WYLE LABORATORIES — SCIENTIFIC SERVICES & SYSTEMS GROUP, WESTERN OPERATIONS, NORCO FACILITY

REPORT NO. 57505
OUR JOB NO. NES 57505
CONTRACT ---
YOUR P. O. NO. G8200023

SOUTHERN CALIFORNIA EDISON COMPANY
2244 Walnut Grove Avenue
Rosemead, California 91770

146 - Page Report

DATE 27 June 1980

QUALIFICATION TESTING
OF
ONE 75 HP SUBMERSIBLE ELECTRIC MOTOR
MODEL NO. 7117636003, TYPE CJL6B
FOR
SOUTHERN CALIFORNIA EDISON COMPANY

REGULATORY DOCKET FILE COPY

REGISTERED PROFESSIONAL ENGINEER
GEORGE D. SHIPWAY
No. 12157
MECHANICAL
STATE OF CALIFORNIA

STATE OF CALIFORNIA }
COUNTY OF RIVERSIDE } ss.

Ray C. Myrick, being duly sworn, deposes and says: That the information contained in this report is the result of complete and carefully conducted tests and is to the best of his knowledge true and correct in all respects.

Ray C. Myrick

SUBSCRIBED and sworn to before me this 1st day of July, 1980

Notary Public in and for the County of Riverside, State of California

My Commission expires OFFICIAL SEAL JULY 14, 1983

CATHERINE C KELTY
NOTARY PUBLIC - CALIFORNIA
RIVERSIDE COUNTY
My comm. expires JUL 14, 1983

DEPARTMENT DYNAMICS

DEPT. MGR. J. J. Anderson

TEST ENGINEER W. Franz

Registered Professional Engineer G. D. Shipway

DCAS-QAR VERIFICATION

QUALITY CONTROL A. Heeseman

W-867A

8101200291

CONTENTS

		Page Number
CONTENTS		i
1.0	SUMMARY	2
2.0	REFERENCES	2
3.0	PROCEDURES AND RESULTS	3
3.1	Receiving Inspection	3
3.2	Irradiation	4
3.3	Aging Test	5
3.4	Functional Tests	6
3.5	Design Basis Event - MSLB	7
TABLE I	AGING AND IRRADIATION SCHEDULE	9
TABLE II	MONITORED PARAMETERS DURING MSLB TEST	10
TEST DATA SHEETS		14 - 94B
FIGURES 1 through 3		11 - 13
PHOTOGRAPHS 1 through 7		95 - 101
APPENDIX A	IRRADIATION TESTING CERTIFICATIONS	102 - 107
APPENDIX B	DATA OBTAINED IN AN EARLIER TEST, WHICH SHOWS TYPICAL WINDING TEMPERATURE	108 - 119
APPENDIX C	WYLE LABORATORIES TEST PROCEDURE NO. 3599, REVISION H, 26 JUNE 1980	120 - 142

1.0 SUMMARY

A residual heat removal (RHR) motor has been successfully environmentally qualified, per the guidelines of IEEE 323 (1974) and 334(1974), for use within the containment of the San Onofre Nuclear Generating Station. The pre-aged and pre-irradiated submersible motor assembly was subjected to a simulated MSLB environment, while under full load, for 33 days. All pertinent data were logged and recorded. No functional anomalies were attributed to the motor or integral motor seal assemblies throughout testing.

The body of this report documents the environmental testing performed on the motor assembly.

2.0 REFERENCES

2.1 Southern California Edison Co. Purchase Order No. G8200023.

2.2 Wyle Laboratories Test Procedure No. 3599, Revision H.

2.3 IEEE Specification 323(1974).

2.4 IEEE Specification 334(1974).

2.5 IEEE Specification 117(1974).

3.0 PROCEDURES AND RESULTS

3.1 RECEIVING INSPECTION

3.1.1 Test Procedures

Upon receipt at Wyle Laboratories, and prior to any testing, the test specimen was visually inspected for evidence of damage which may have been incurred in shipping. Results of the visual examination, together with specimen identification information, were recorded on the appropriate test data sheet.

3.1.2 Test Results

There was no visible evidence of damage to the specimen upon receipt at Wyle Laboratories.

The specimen was identified as a 75 HP Submersible Motor, manufactured by Louis Allis, Model No. 7117636003, Type CJL6B.

3.0 PROCEDURES AND RESULTS

3.2 IRRADIATION

3.2.1 Test Procedures

The motor components were subjected to gamma irradiation from a cobalt-60 source per the schedule of Table I (Page 9).* These tests were performed at a suitable facility as documented in Appendix A (Pages 102 through 107). To ensure an even dose, the components were rotated 180 degrees about their vertical centerlines at the mid-point of the radiation exposure.

3.2.2 Test Results

No visible deteriorations were noted upon post-test visual inspection of the components.

* Note: The motor coils and leads were exempted from irradiation per Reference 2.2, attached as Appendix C, Pages 120 through 142.

3.0 PROCEDURES AND RESULTS

3.3 AGING TEST

3.3.1 Test Procedure

3.3.1.1 The motor components were placed in a suitable circulating air thermal conditioning chamber and subjected to accelerated thermal aging per the schedule of Table I (Page 9).*

3.3.1.2 Vibration

The aging to simulate startups and other running conditions consisted of vibrating the motor at a 1.5g acceleration for one hour at 60 Hz. The motor was bolted to a vibration table in its normal mounting manner and operated in a no-load condition during the one hour of vibration. The vibration input was in a vertical direction with the motor mounted in its normal horizontal position. Cooling water was supplied to the motor from a city water supply. The thermocouples were not monitored during this phase of the test.

A megger and a high potential test was performed (1279 volts alternating current for one minute) between each of the windings and the motor case after the vibration.

3.3.2 Test Results

No visible damages or anomalies were apparent due to the thermal aging performed; no visible or electrical anomalies were noted as a result of the vibration aging performed.

* Note: The motor coils and leads were exempted from thermal aging per Reference 2.2, attached as Appendix C, Pages 120 through 142.

3.0 PROCEDURES AND RESULTS

3.4 FUNCTIONAL TESTS

3.4.1 Test Procedures

Megohmmeter tests were conducted after each major test step, i.e., after DBE testing. The tests were conducted with commercially available apparatus and the results were recorded.

3.4.2 Test Results

The results are discussed separately in the results section of each major test category, i.e., Paragraph 3.5.2.

3.0 PROCEDURES AND RESULTS

3.5 DESIGN BASIS EVENT - MSLB

3.5.1 Test Procedures

The motor assembly* was installed in a suitable pressure vessel. An open (no housing) pump impeller was installed on the output shaft. With the motor submerged in a solution of boric acid (2.46%) and TSP (pH 7.5), the impeller provided the required motor load. The motor electrical junction box was sealed with an SCE purchased "Conax" type seal for the wire leads. The sealing process negated the recording of the motor winding thermocouples; however, examples of these data, obtained in previous testing, are presented in Appendix B (Pages 110 through 121) for reference only. A pressure port (3/4-inch stainless steel tube, four feet long) was provided for pressure measurement in the enclosed junction box.

The test vessel and specimen are shown schematically in Figure 1, and actually in the attached photographs. The overall test system is depicted in Figure 2 (Pages 11 and 12, respectively).

Before subjecting the motor to testing, 384 ml of oil (seal lube) was bled out the top of the motor mounted reservoir (1.5-inch diameter x 8 inches long).

After the motor was installed and the seal oil bled, the motor was submerged and subjected to the environmental profile of Figure 3 (Page 13). The monitored parameters are listed in Table II (Page 10) along with their typical or controlled values.

3.5.2 Test Results

The motor operated at a recorded 52 KW input power for 33.3 days with no recorded mechanical or electrical anomalies or out-of-tolerance conditions noted. A meghommeter reading of winding insulation resistance taken at the test conclusion indicated a

* Detailed description of the test motor configuration shall be the assigned responsibility of SCE.

3.0 PROCEDURES AND RESULTS

3.5.2 Test Results (continued)

value of 8×10^9 ohms; a more than adequate value. A visual examination of the motor revealed no anomalies, and the shaft rotated smoothly with no detectable bearing defects. The motor seal oil leakage rate varied somewhat during the test, but was acceptable by SCE throughout the testing. Only a minor pressure build-up occurred within the motor housing even during the temperature ramps. No water entered the internal motor cavity, as evidenced by the moisture sensor. Typical data are shown on Pages 20 through 94. The original data shall be transmitted to SCE.

TABLE I

AGING AND IRRADIATION SCHEDULE

Component or Assembly	Accelerated Temperature (F)	Accelerated Time	Irradiation Dose (rads)
Motor Coils	Exempt*	Exempt*	Exempt**
Seal	302	100 hours	5.00×10^5 **
Seal O-rings	302	100 hours	5.00×10^5 **
Gaskets	302	182 hours	4.00×10^6 - 5.00×10^6
Oil	-	-	4.00×10^6
End bell O-rings	302	182 hours	4.00×10^6 - 5.00×10^6
RTV sealant	-	-	4.50×10^6 - 7.40×10^6

* Note: Exemption per the Wyle QTP 3599, Rev. H, attached as Appendix C.

** Note: Per SCE dose requirement reduced.

TABLE II

MONITORED PARAMETERS DURING MSLB TEST

Parameters	Controlled Value	Control Tolerances	Typical Measured Value	Measurement Instrument	Record Device
Borate temperature	265F, 225F	+7, -0F	268F, 228F	T.C.	Data logger
Borate pressure	61.2,49.7,28.8	+1, -.5psig	62.1,49.5,29.0	Transducer	Data logger
Motor cooling temperature (in)	135F	+10, -0F	142F	T.C.	Data logger
Motor cooling temperature (out)	N/A	N/A	158F	T.C.	Data logger
Seal cooling temperature (in)	135F	+10, -0F	140F	T.C.	Data logger
Seal cooling temperature (out)	N/A	N/A	146F	T.C.	Data logger
6 each winding temperatures	N/A	N/A	*	N/A	N/A
Motor cooling flow	5gpm	+2, -0 gpm	5.0gpm	Venturi	Logged
Seal cooling flow	5gpm	+2, -0 gpm	5.0gpm	Venturi	Logged
Motor moisture trip	H_2O	N/A	No H_2O	Relay circuit	N/A
Motor case pressure	N/A	N/A	3.0 max psig	Transducer	Logged
Leg currents	N/A	N/A	80	Meters	Logged
Line voltage	460, 3ø	±10%	465	Meter	Logged
Power	N/A	N/A	52KW	Meter/ Recorder	Recorder
Seal oil pressure	Tank + 5 psig	+5, -0	7 psid	Gage	N/A
Seal oil temperature	N/A	N/A	250F	T.C.	Data logger
Seal oil use rate	N/A	N/A	Ave = .15gal/day	Sight gage	Logged
pH of solution	7.5	± 0.5	7.1	Meter	Logged

*Not measured

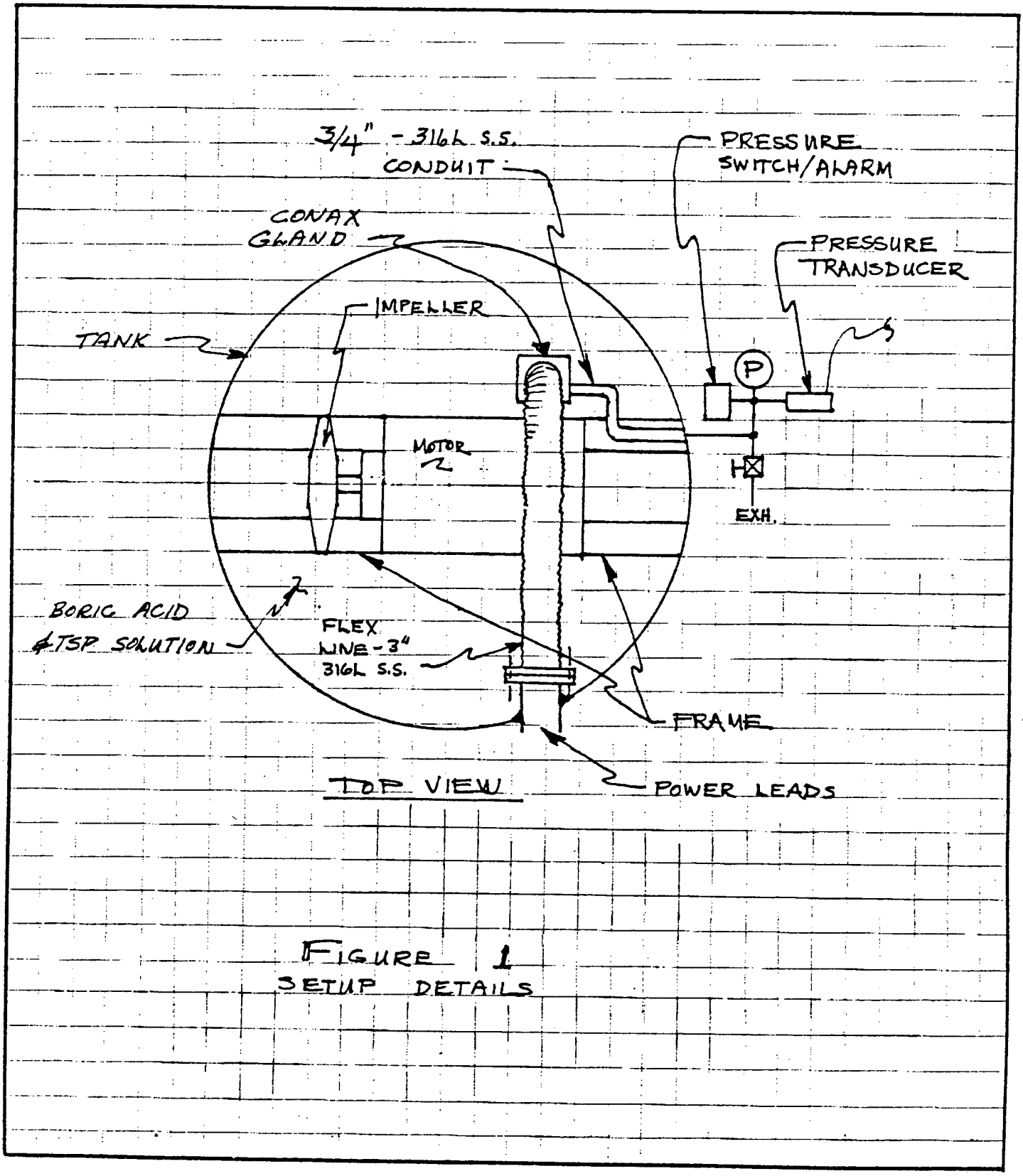

FIGURE 1
SETUP DETAILS

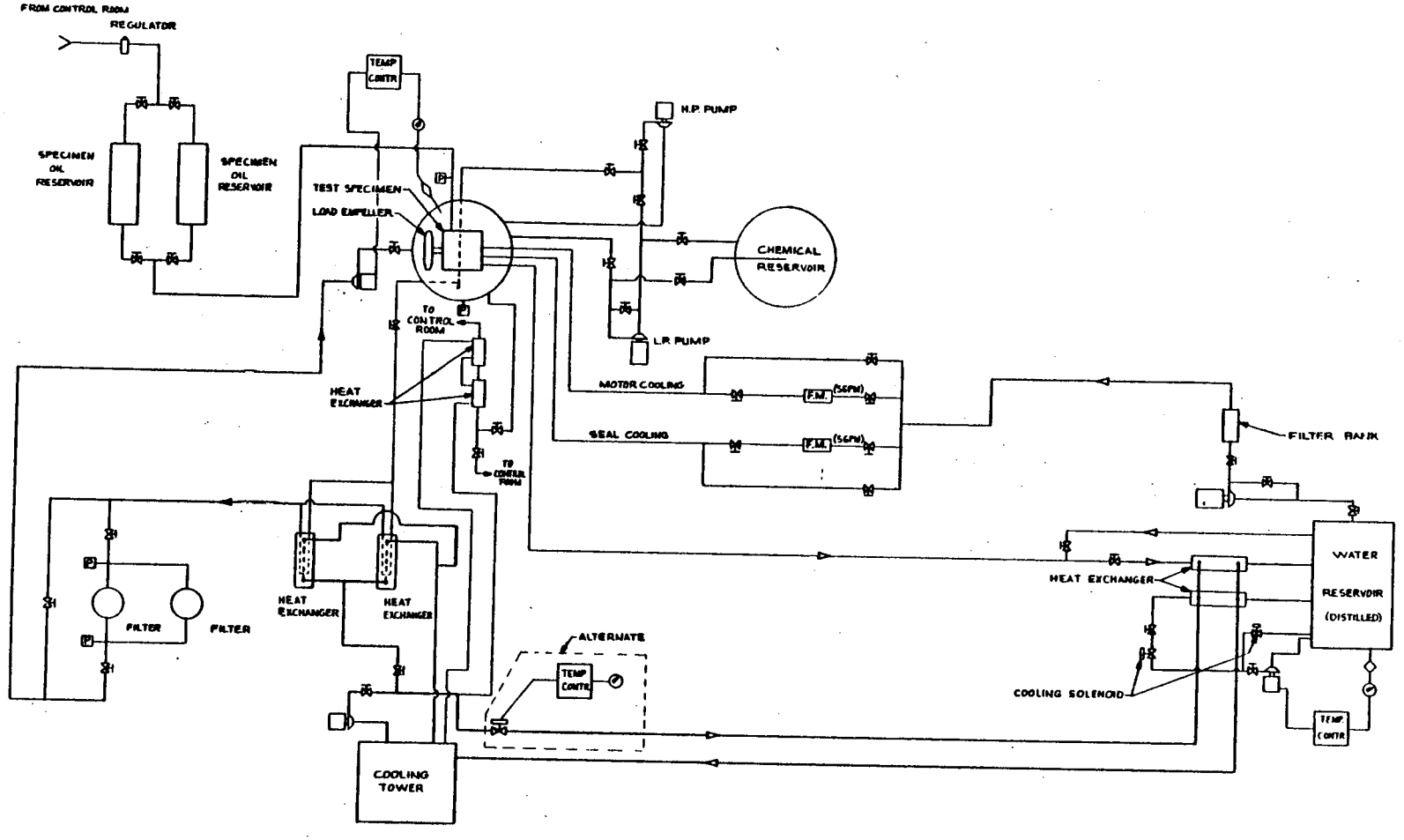

FIGURE 2

MSB SIMULATION - SYSTEM SCHEMATIC

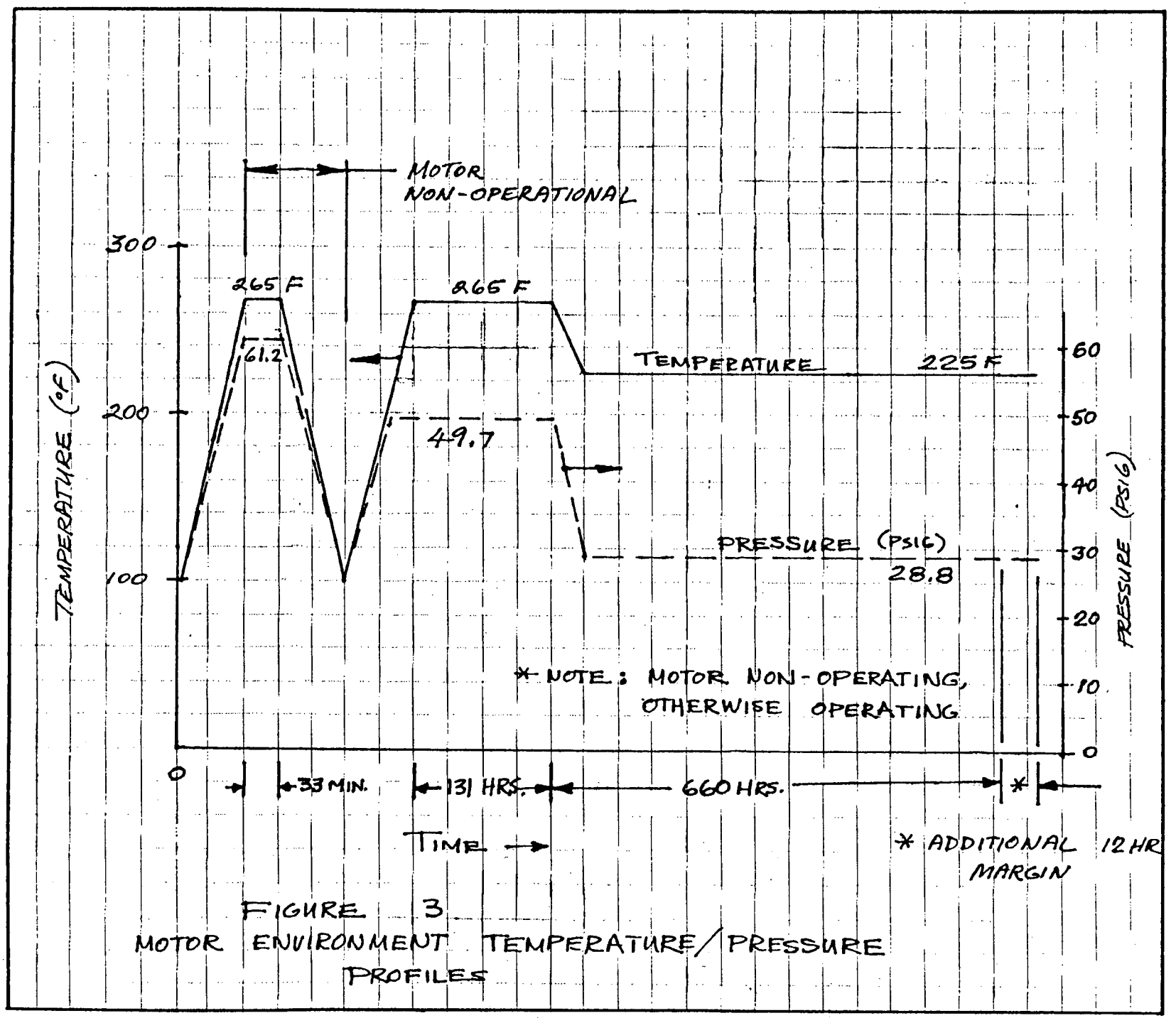

FIGURE 3
MOTOR ENVIRONMENT TEMPERATURE/PRESSURE
PROFILES

DATA SHEET

Customer SOUTHERN CALIF. EDISON Job No. 57505 Date 3-18-77

Specimen 75 HP ELECTRIC MOTOR

RECEIVING INSPECTION

No. of Specimens Received: ONE (1)

Record identification information exactly as it appears on the tag or specimen:

Manufacturer LOUIS ALLIS

Part Numbers MODEL NO. 7117636003
TYPE - CJL6B FRAME 404SPL

460 VAC 60 HZ 92 AMPS

How does identification information appear: (name plate, tag, painted, imprinted, etc.)

NAME PLATE

Serial Numbers:* NONE

Examination: Visual, for evidence of damage, poor workmanship, or other defects, and completeness of identification.

Inspection Results: There was no visible evidence of damage to the specimens unless noted below.

* If additional space is required for serial numbers, use an additional page, or reference first functional test data sheet (if applicable).

Inspected By L. E. Brock
Sheet No. _____ of _____
Approved WF Date: 5/23/80

W-614
Q.C. Form Approval

DATA SHEET

Customer SOUTHERN CALIFORNIA EDISON Job No. 57522
Date 4-3-78

Specimen 75 HP ELECTRIC MOTOR (SUBMERSIBLE)

RECEIVING INSPECTION

No. of Specimens Received: ONE (1)

Record identification information exactly as it appears on the tag or specimen:

Manufacturer LOUIS ALLIS

Part Numbers MODEL NO. 7117636003
TYPE CJL6B

How does identification information appear: (name plate, tag, painted, imprinted, etc.)

NAME PLATE

Serial Numbers:* NONE

Examination: Visual, for evidence of damage, poor workmanship, or other defects, and completeness of identification.

Inspection Results: There was no visible evidence of damage to the specimens unless noted below.

* If additional space is required for serial numbers, use an additional page, or reference first functional test data sheet (if applicable).

Inspected By J. E. Brock
Sheet No. ____ of ____
Approved WF Date: 5/23/80

W-614
Q.C. Form Approval [illegible]

WYLE LABORATORIES

DATA SHEET

Customer SCE Job No. 57505

Date 3/26/80

Specimen MOTOR -75 H.P SUBMERSIBLE

RECEIVING INSPECTION

No. of Specimens Received: 1

Record identification information exactly as it appears on the tag or specimen:

Manufacturer LOUIS ALLIS

Part Numbers M/N 7117636003
TYPE CJL6B

How does identification information appear: (name plate, tag, painted, imprinted, etc.)

NAME PLATE

Serial Numbers:* NONE

Examination: Visual, for evidence of damage, poor workmanship, or other defects, and completeness of identification.

Inspection Results: There was no visible evidence of damage to the specimens unless noted below.

* If additional space is required for serial numbers, use an additional page, or reference first functional test data sheet (if applicable).

Inspected By R. Silva

Sheet No. ___ of ___

Approved WF Date: 3/26/80

W-614

Q.C. Form Approval

WYLE LABORATORIES

DATA SHEET

Test Title: THERMAL AGING SIMULATION

Customer SCE

Job. No. ~~58~~ wf 57505

Date Test Started 9/10/79

Part No. —

Date Test Completed

S/N —

Amb. Temp. —

Spec. — Rev.

Photo —

Para. —

Test Med. —

Specimen Temp. —

Specimen ELEC. BOX GASKET (3)
END BELL O-RINGS (5)

PROCEDURE

The specimen* was installed in a suitable temperature test chamber. The specimen was subjected to the stabilized "accelerated" aging temperature** environment (see below) for the period(s) required** (see below).

At the conclusion of the test the specimen was visually examined for evidence of physical damage or deterioration.

TEST RESULTS

Results of the post-test visual inspections are listed in the following table.

Date/Time***		Elapsed Time	Temperature (F)	Results or Remarks
In chamber	Out of Chamber			
9/10 @ 0930		~~7 days~~ wf	302F	SPECIMENS PRE-IRRADIATED
				9/11 LOST 4 hrs
				9/15 LOST 6 hrs
	9/18 0930	182 HR		SPECIMENS LOOKED
				NEW AFTER AGING

* Or specimens
** Values calculated in the aging analysis
*** At the stabilized temperature listed

Specimen Meets Spec. Requirements YES ☐ NO ☐

Q. C. Form Approval ~~[illegible]~~

Tested By W. Franz

Witness _____ Date: _____

Sheet No. _____ of _____

Approved wf Date: 9/18/79

W 614 A

DATA SHEET

Test Title: THERMAL AGING SIMULATION

Customer SCE

Part No. —

S/N —

Spec. — Rev. —

Para. —

Job. No. 57505

Date Test Started 3/18/80

Date Test Completed 3/22/80

Amb. Temp. —

Photo —

Test Med. OVEN

Specimen Temp. 302 F, +5, -0 F

Specimen O-RINGS AND GASKET MAT'L

PROCEDURE

The specimen* was installed in a suitable temperature test chamber. The specimen was subjected to the stabilized "accelerated" aging temperature** environment (see below) for the period(s) required** (see below).

At the conclusion of the test the specimen was visually examined for evidence of physical damage or deterioration.

TEST RESULTS

Results of the post-test visual inspections are listed in the following table.

Date/Time***		Elapsed Time	Temperature (F)	Results or Remarks
In chamber	Out of Chamber			
3/18/80	3/22/80	100HR	302F	OK

* Or specimens

** Values calculated in the aging analysis

*** At the stabilized temperature listed

Specimen Meets Spec. Requirements YES ☐ NO ☐

Q. C. Form Approval [signature]

Tested By R SHEA

Witness — Date: —

Sheet No. — of —

Approved [signature] Date: 3/25/80

W 614 A

WYLE LABORATORIES

DATA SHEET

Test Title: THERMAL AGING SIMULATION

Customer SCE
Part No. —
S/N —
Spec. — Rev. —
Para. —

Job. No. 57505
Date Test Started 3/14/80
Date Test Completed
Amb. Temp. —
Photo —
Test Med. AIR
Specimen Temp. 302F (150C)

Specimen 4 SEAL CARBONS, 1 DOZ O-RINGS, ~~2 BEARINGS W/SHEILDS~~ wf

PROCEDURE

The specimen* was installed in a suitable temperature test chamber. The specimen was subjected to the stabilized "accelerated" aging temperature** environment (see below) for the period(s) required** (see below).

At the conclusion of the test the specimen was visually examined for evidence of physical damage or deterioration.

TEST RESULTS

Results of the post-test visual inspections are listed in the following table.

Date/Time***		Elapsed Time	Temperature (F)	Results or Remarks
In chamber	Out of Chamber			
3/14/80	3/19/80	~~100~~ 102 wf HR	302F	SEAL PARTS — OK

* Or specimens
** Values calculated in the aging analysis
*** At the stabilized temperature listed

Specimen Meets Spec. Requirements YES ☐ NO ☐

Q. C. Form Approval [signature]

Tested By R. SHEA
Witness _____ Date: _____
Sheet No. _____ of _____
Approved wf Date: 3/14

W 614 A

WYLE LA[illegible]TORIES

DYNAMICS SECTIC

VIBRATION TEST DATA SHEET

VIBRATION Aging.

Job No. _____

Sheet _____ of _____

I D No. _____

Date	Time	Axis	Temp (°F)	SINUSOIDAL Freq. (HZ)	SINUSOIDAL Disp. ("DA)	SINUSOIDAL Accel. (± G)	Test Time (Min.)	Comments	Name
1978	NOTED	VERT	AMB	60	—	1.5	60		
6-19	09:00	VERT	AMB	60	—	1.5		START DWELL	
	10:00						60	COMPLETED	

Report No. 57505

Page No. 19A

W589

Signed: Philip Russell

WYLE LABORATORIES

DATA SHEET

CUSTOMER SCE
Test Title: MSLB

Specimen SEE RECEIVING INSPECTION
Part No. SEE RECEIVING INSPECTION

Job No. 57505
S/N SEE RECEIVING INSPECTION
Date 5/23/80

CHANNEL DESCRIPTION

12	6.216	V	PRESSURE (1V = 10 PSIG)
11	***.*	°F	MOTOR WINDING T.C.'S (NO CONNECTION)
10	***.*	°F	
9	***.*	°F	
8	***.*	°F	
7	***.*	°F	
5	219.9	°F	SEAL OIL
4	142.4	°F	SEAL WATER OUT
3	138.0	°F	MOTOR WATER IN
2	138.0	°F	SEAL WATER IN
1	179.7	°F	MOTOR WATER OUT
0	268.7	°F	BORIC ACID/TSP SOLUTION

TEMPS IN °F

058477 — WYLE JOB NUMBER
003:17:52:22 — DATE & TIME

TYPICAL DATA
(1ST TEMP. DWELL)

12	6.328	V
11	***.*	°F
10	***.*	°F
9	***.*	°F
8	***.*	°F
7	***.*	°F
5	284.6	°F
4	286.0	°F
3	263.7	°F
2	265.3	°F
1	262.6	°F
0	264.6	°F

058477
003:17:44:15

WYLE LABORATORIES

DATA SHEET

Report No. 57505
Page No. 21

CUSTOMER SCE
Test Title: MSLB
Specimen MOTOR
Part No. SEE RECEIVING INSPECTION
Job No. 57505
S/N SEE RECEIVING INSPECTION
Date 3/23/80

2ND TEMP. DWELL

12	4,970	V	PRESSURE (10PSIG/V)
11	****,*	°	MOTOR WINDING T.C.'s (NO CONNECTIONS)
10	****,*	°	
9	****,*	°	
8	****,*	°	
7	266,1	°	BORIC ACID
5	231,3	°	SEAL OIL
4	143,4	°	SEAL WATER OUT
3	140,9	°	MOTOR WATER IN
2	137,8	°	SEAL WATER IN
1	167,1	°	MOTOR WATER OUT
0	-***,*	°	N/C

058477 — WYLE JOB NUMBER
014:20:15:32 — DATE & TIME

3RD TEMP. DWELL

12	2,839	V	SAME AS ABOVE DESCRIPTIONS
11	****,*	°	
10	****,*	°	
9	****,*	°	
8	****,*	°	
7	227,7	°	
5	214,8	°	
4	144,1	°	
3	139,7	°	
2	141,6	°	
1	162,1	°	
0	-***,*	°	

056477
016:20:00:00

TYPICAL DATA

W 614 B

QC Form Approval

WYLE LABORATORIES

DATA SHEET

Report No. 57505
Page No. 22

CUSTOMER SOUTHERN CALIFORNIA EDISON
Test Title: MSLB
Specimen 75 HP Submersible
Electric Motor
Part No. M/N 7117636003

Job No. 57505
S/N Type CJL6B
Date 4-3-4-80

SCE 5 7 8 9 10

MTR J BOX PRESS

TIME	Ch. No. ~~PSI~~	13	MOTOR WINDING TEMPERATURES (F) 9	10	11	Seal #5	SEAL COOLING WATER T-in #2	T-out #4	Flow*	MOTOR COOLING WATER T-in #3	T-out #1	Flow*	CHAMBER SOLUTION Temp #0	Press #12	SEAL OIL P (psig)
1120		—				200	148	152	6.2	148	162	6.2	219	17	22
1350	2 PSI	—													
1430	2.5	—				219	151	156	6.2	151	171	6.2	241	23	28
1530	2.75	—				225	150	155	6.2	150	173	6.2	254	33	38
1700	3	—	MOTOR OFF			283	264	279	0	256	253	0	267	41	46
1800	3	—	MOTOR OFF											41	46
1900	2	—	MOTOR OFF											62	67
1915	0	—	MOTOR OFF											27	32
2030	0	—	MOTOR OFF											8	14
2045	0	—				190	137	140	6.3	137	147	6.3	189	24	29
2100	1	—				196	137	141	6.2	137	150	6.2	194	38	39
2200	2	—				210	140	144	6.2	140	157	6.2	215	44	49
2300	2.4	—				221	141	145	6.2	140	162	6.2	234	52	57
2400	2.5	—				232	141	147	6.1	141	166	6.1	252	56	61
4/4 0100	3	—	START TEST (13 HRS) SEQUENT.			243	141	147	6.1	141	169	6.1	267	60	65
0200	3	—				243	141	147	6.1	141	169	6.1	267	60	65
0300	3	—				243	140	145	6.1	140	168	6.1	268	62	66
0400	3	—				243	140	146	6.1	140	167	6.1	265	60	66
0500	3	—				243	140	146	6.1	140	168	6.1	269	62	66
0600	3	—				243	140	146	6.1	140	168	6.1	269	60	66
0700		—				238	140	145	6.1	140	167	6.1	268	49	54
~~0800~~ 0740		—	MOTOR OFF												

NOTES:
0625 LOWER TANK PRESSURE TO 49.7 AS PER TEST PROCEDURE 6.9.3.

6 HRS 40 MIN TOTAL TIME

* 6.0 VDC = 5 gpm.

QC Form Approval

SHEET ___ OF ___

WYLE LABORATORIES

DATA SHEET

Report No. 57505

Page No. 23

CUSTOMER SOUTHERN CALIFORNIA EDISON

Test Title: MSLB

Specimen 75 HP Submersible Electric Motor

Part No. M/N 7117636003

Job No. 57505

S/N Type CJL6B

Date 4/9/80

TIME	MOTOR J-BOX PRESS. Ch. No. PSI	MOTOR WINDING TEMPERATURES (F) 8	9	10	11	SEAL COOLING WATER Seal #5	T-in #2	T-out #4	Flow	MOTOR COOLING WATER T-in #3	T-out #1	Flow	CHAMBER SOLUTION Temp #27	Press #12	SEAL OIL P (psig)
1440	1					226	139	144	6.2	139	161	6.2	247	41	46
1500	2					232	138	143	6.2	136	165	6.2	252	50	56
1600	3	START #2 TEST				240	139	145	6.2	139	169	6.2	265	50	56
1700	3					245	140	145	6.1	139	169	6.1	269	49	56
1800	3					243	139	145	6.1	139	170	6.1	270	49	56
1900	3					242	142	147	6.1	141	170	6.1	268	49	56
2000	3					243	139	145	6.1	138	169	6.1	268	49	56
2100	3					238	139	145	6.1	139	168	6.1	259*	49	56
2200	3					243	140	145	6.1	139	169	6.1	268*	50	56
2300	3					241	137	143	6.1	136	166	6.1	265	49	56
2400	3					238	137	142	6.1	135	166	6.1	266	48	56
0100	3					239	140	146	6.1	139	167	6.1	266	48	56
0200	3					237	136	141	6.1	136	166	6.1	266	48	56
0300	3					238	138	143	6.1	136	167	6.1	265	48	56
0400	3					232	137	143	6.1	136	166	6.1	264	48	56
0500	3					235	135	141	6.1	136	164	6.1	261	49	56
0600	3					232	142	147	6.1	141	167	6.1	260	50	56
0700	3					242	142	149	6.1	143	170	6.1	262	50	56
0800	3					241	137	143	6.1	137	166	6.1	264	49	56
0900	3					245	139	145	6.1	139	167	6.1	268	51	56
1000	3					245	140	146	6.1	139	168	6.1	267	49	56
1100	3					244	138	144	6.1	138	168	6.1	267	50	56

NOTES: 19 HRS

* DATA LOGGER T.C. reading false temp (2100)

25 HRS 40 MIN TOTAL TIME

W 614 B

QC Form Approval

4/10

SHEET ____ OF ____

WYLE LABORATORIES

DATA SHEET

Report No. 57505

Page No. 24

CUSTOMER SOUTHERN CALIFORNIA EDISON

Test Title: MSLB

Specimen 75 HP Submersible

Part No. M/N 7117636003 Electric Motor

Job No. 57505

S/N Type (JL&R

Date 4/14/80

SCE 5 7 8 9 10

J-BOX PRESS PSI

TIME	MOTOR WINDING TEMPERATURES (F) Ch. No.					SEAL COOLING WATER				MOTOR COOLING WATER			CHAMBER SOLUTION		SEAL OIL
	7	8	9	10	11	Seal #5	T-in #2	T-out #4	Flow	T-in #3	T-out #1	Flow	Temp #7	Press #12	P (psig)
4/10															
1200	3					245	139	145	6.1	139	168	6.1	267	50	56
1300	3					245	138	143	6.1	137	166	6.1	266	50	56
1400	3					234	137	143	6.1	137	166	6.1	267	50	56
1500	3					236	137	143	6.1	137	166	6.1	267	49	56
1600	3					236	138	147	6.1	138	166	6.1	267	50	56
1700	3					236	141	146	6.1	140	168	6.1	269	50	56
1800	3					237	138	144	6.1	138	167	6.1	267	49	56
1900	3					239	138	144	6.1	138	165	6.1	266	50	56
2000	3					246	138	144	6.1	138	167	6.1	266	50	56
2100	3					242	141	146	6.1	136	169	6.1	266	49	56
2200	3					243	140	146	6.1	140	166	6.1	267	49	56
2300	3					243	139	145	6.1	145	167	6.1	267	49	56
2400	3					244	141	147	6.1	142	167	6.1	266	48	56
4/11															
0100	3					243	140	146	6.1	146	167	6.1	265	48	56
0200	3					245	141	146	6.1	137	168	6.1	267	49	56
0300	3					244	140	146	6.1	133	167	6.1	266	48	56
0400	3					245	140	147	6.1	144	168	6.1	266	48	56
0500	3					245	141	147	6.1	141	168	6.1	267	48	56
0600	3					246	141	147	6.1	147	169	6.1	267	48	56
0700	3					246	140	146	6.1	136	167	6.1	267	50	56
0800	3					245	139	144	6.1	136	165	6.1	266	49	56
0900	3					244	139	144	6.1	135	164	6.1	241	50	56

NOTES: 22 HRS

0900 HRS -> T.C. - false reading

47 HRS 40 MIN

QC Form Approval

SHEET ____ OF ____

WYLE LABORATORIES

DATA SHEET

Report No 57505
Page No. 25

CUSTOMER SOUTHERN CALIFORNIA EDISON
Test Title: MSLB
Specimen 75 HP Submersible
Electric Motor
Part No. M/N 7117636003

Job No. 57505
S/N Type (JL6B
Date 4/11/90

SC 5 7 8 9 10

TIME	J-BOX PRESSURE Ch. No. 7	MOTOR WINDING TEMPERATURES (F) 8	9	10	11	Seal #5	SEAL COOLING WATER T-in #2	T-out #4	Flow	MOTOR COOLING WATER T-in #3	T-out #1	Flow	CHAMBER SOLUTION Temp #7	Press #12	SEAL OIL P (psig)
1000	3					244	138	144	6.1	140	166	6.1	267	50	56
1100	3					245	138	144	6.1	136	166	6.1	265	50	56
1200	3					248	141	147	6.1	144	167	6.1	270	51	56
1300	3					246	136	142	6.1	134	166	6.1	268	51	56
1400	3					245	137	143	6.1	139	166	6.1	268	50	56
1500	3					245	137	142	6.1	137	166	6.1	268	50	56
1600	3					244	135	140	6.1	134	163	6.1	268	50	56
1700	3					244	139	144	6.1	138	166	6.1	267	50	56
1800	3					244	139	144	6.1	136	166	6.1	268	50	56
1900	3					244	142	148	6.1	140	167	6.1	267	50	56
2000	3					243	139	144	6.1	139	166	6.1	266	50	56
2100	3					243	142	148	6.1	139	167	6.1	267	49	56
2200	3					239	140	145	6.1	137	167	6.1	265	49	56
2300	3					243	141	147	6.1	143	167	6.1	277	50	56
2400	3					242	140	145	6.1	137	167	6.1	268	49	56
0100	3					243	141	146	6.1	137	167	6.1	269	49	56
0200	3					240	143	148	6.1	139	168	6.1	269	49	56
0300	3					242	141	147	6.1	145	168	6.1	269	48	56
0400	3					239	140	146	6.1	140	167	6.1	265	49	56
0500	3					242	142	148	6.1	139	168	6.1	265	49	56
0600	3					242	141	146	6.1	136	166	6.1	267	49	56
0700	3					241	140	145	6.1	137	167	6.1	268	49	56

4-11

4/12

NOTES: 22 HRS
TC false reading @ 2300 on 4/11
69 HRS 40 MIN

QC Form Approval

SHEET ___ OF ___

WYLE LABORATORIES

DATA SHEET

Report No. 57505
Page No. 26

CUSTOMER SOUTHERN CALIFORNIA EDISON
Test Title: MSLB
Specimen 75 HP Submersible Electric Motor
Part No. M/N 7117636003
Job No. 57505
S/N Type (JL6R
Date 4/12/80

SCE 5 7 8 9 10

TIME	Ch. No. 3	8	9	10	11	Seal #5	T-in #2	T-out #4	Flow	T-in #3	T-out #1	Flow	Temp #7	Press #12	P (psig)
	J-Box Pressure	MOTOR WINDING TEMPERATURES (F)					SEAL COOLING WATER			MOTOR COOLING WATER			CHAMBER SOLUTION		SEAL OIL
4/12 0800	3					242	141	147	6.1	141	167	6.1	269	49	56
0900	3					241	140	146	6.1	142	166	6.1	268	50	56
1000	3					239	139	145	6.1	141	166	6.1	268	51	56
1100	3					239	140	145	6.1	139	166	6.1	270	50	56
1200	3					239	143	149	6.1	143	167	6.1	269	50	56
1300	3					236	141	147	6.2	140	168	6.2	267	50	56
1400	3					231	141	147	6.1	142	167	6.1	269	50	56
1500	3					231	142	147	6.1	139	168	6.1	268	50	56
1600	3					230	141	147	6.1	142	167	6.1	267	49	56
1700	3					230	141	147	6.1	143	168	6.1	266	50	56
1800	3					231	143	148	6.1	140	168	6.1	267	51	56
1900	3					233	141	147	6.1	141	168	6.1	271	50	56
2000		MOTOR OFF				182	142	146	6.1	146	152	6.1	13	11	11
2139	0	MOTOR ON				169	136	140	6.1	139	145	6.1	210	22	27
2200	1					209	142	147	6.1	142	159	6.1	214	28	33
2300	2					220	142	146	6.1	138	162	6.1	232	35	42
2400	3					233	144	151	6.1	149	167	6.1	249	44	50
4/13 0100	3					239	140	146	6.1	139	166	6.1	263	51	56
0200	3	JINK	TEST 0130			239	143	147	6.1	137	168	6.1	265	48	56
0300	3					239	139	145	6.1	139	167	6.1	266	49	56
0400	3					240	141	148	6.1	144	170	6.1	266	49	56
0500	3					238	140	145	6.1	138	168	6.1	266	48	56

NOTES: 1000 STOP MOTOR & REPLACE TC's. ALSO INSTALLED TWO NEW TC's (16 HRS)

85 HRS 40 MIN. TOTAL TIME

QC Form Approval

SHEET ___ OF ___

WYLE LABORATORIES

DATA SHEET

Report No. 57505
Page No. 27

CUSTOMER SOUTHERN CALIFORNIA EDISON
Test Title: MSLB
Specimen 75 HP Submersible Electric Motor
Part No. M/N 7117636003
Job No. 57505
S/N Type (JL6R
Date 4/13/80

SCE 5 7 8 9 10

TIME	Ch. No. 3	8	9	10	11	Seal #5	T-in #2	T-out #4	Flow	T-in #3	T-out #1	Flow	Temp #7	Press #12	P (psig)
	J-Box Press.	MOTOR WINDING TEMPERATURES (F)					SEAL COOLING WATER			MOTOR COOLING WATER			CHAMBER SOLUTION		SEAL OIL
4/13 0600	3					232	139	144	6.1	136	165	6.1	260	46	56
0700	3					236	138	143	6.1	141	167	6.1	265	50	56
0800	3					238	142	148	6.1	143	168	6.1	266	50	56
0900	3					236	136	142	6.1	134	165	6.1	267	50	56
1000	3					236	139	143	6.1	138	167	6.1	266	51	56
1100	3					237	140	145	6.1	138	167	6.1	269	51	56
1200	3					237	140	145	6.1	138	167	6.1	269	51	56
1300	3					237	139	144	6.1	138	167	6.1	269	50	56
1400	3					236	138	144	6.1	137	166	6.1	268	50	56
1500	3					233	135	140	6.1	133	164	6.1	265	50	56
1600	3					237	142	148	6.1	144	168	6.1	266	50	56
1700	3					236	140	146	6.1	141	168	6.1	265	49	55
1800	3					236	139	144	6.1	141	167	6.1	268	50	55
1900	3					238	144	149	6.1	140	170	6.1	268	49	55
2000	3					236	140	146	6.1	133	168	6.1	268	49	55
2100	3					232	136	140	6.1	130	165	6.1	267	48	55
2200	3					232	132	137	6.1	134	163	6.1	267	48	55
2300	3					233	135	140	6.1	138	163	6.1	267	50	55
2400	3					234	135	140	6.1	132	165	6.1	268	49	55
4/14 0100	3					234	136	142	6.1	133	164	6.1	269	49	55
0200	3					232	136	141	6.1	132	164	6.1	266	49	56
0300	3					227	136	141	6.1	136	164	6.1	265	50	55

NOTES:

22 0600 4/13 Data logger TC false reading

107 HRS 40 MIN

QC Form Approval

SHEET ___ OF ___

WYLE LABORATORIES

DATA SHEET

Report No 57505
Page No. 28

CUSTOMER SOUTHERN CALIFORNIA EDISON
Test Title: MSLB
Specimen 75 HP Submersible
Electric Motor
Part No. M/N 7117636003

Job No. 57555
S/N TYP[illegible] JL6R
Date 4/14/80

SCE No. 5 7 8 9 10

TIME	Ch. No. #	8	9	10	11	Seal #5	T-in #2	T-out #4	Flow	T-in #3	T-out #1	Flow	Temp #7	Press #12	P (psig)
		MOTOR WINDING TEMPERATURES (F)				SEAL COOLING WATER				MOTOR COOLING WATER			CHAMBER SOLUTION		SEAL OIL
		J-Box Press.													
0400	3					234	135	147	6.1	143	176	6.1	267	51	56
0500	3					234	139	145	6.1	142	166	6.1	267	49	55
0600	3					233	140	146	6.1	142	166	6.1	266	48	55
0700	3					230	135	140	6.1	135	163	6.1	265	49	55
0800	3					229	135	140	6.1	135	163	6.1	265	49	55
0900	3					232	135	141	6.1	135	161	6.1	267	50	55
1000	3					232	136	142	6.1	136	164	6.1	267	50	55
1100	3					232	136	140	6.1	136	164	6.1	268	51	56
1200	3					233	140	146	6.1	141	168	6.1	266	50	56
1300	3					233	142	147	6.1	141	169	6.1	266	50	56
1400	3					233	149	149	6.1	142	170	6.1	265	50	56
1500	3					232	143	149	6.1	140	169	6.1	265	50	56
1600	3					232	140	146	6.1	137	168	6.1	267	50	56
1700	3					231	139	145	6.1	145	167	6.1	266	50	56
1800	3					234	142	147	6.1	138	169	6.1	270	49	56
1900	3					235	141	146	6.1	139	170	6.1	270	50	56
2000	3					231	137	143	6.1	136	166	6.1	268	50	56
2100	3					232	139	144	6.1	135	167	6.1	268	49	56
2200	3					232	138	144	6.1	142	167	6.1	268	49	56
2300	3					232	136	141	6.1	135	166	6.1	269	49	56
2400	3					230	136	141	6.1	135	165	6.1	267	48	56
0100	3					230	137	141	6.1	135	165	6.1	267	48	56

NOTES: 22 Hrs of Run Time.

22 HRS
12-1 HRS 40 MIN TOTAL TIME

QC Form Approval

SHEET 4/5 OF

WYLE LABORATORIES

DATA SHEET

Report No. 57505
Page No. 29

CUSTOMER SOUTHERN CALIFORNIA EDISON
Test Title: MSLB
Specimen 75 HP Submersible Electric Motor
Part No. M/N 7117636003
Job No. 57505
S/N Type (JL6R
Date 4/15/90

SC . 5 7 8 9 10

J-Box Press.

TIME	Ch. No. 5	8	TOTAL HRS 9	MIN 10	DAYS 11	Seal #5	SEAL COOLING WATER T-in #2	T-out #4	Flow	MOTOR COOLING WATER T-in #3	T-out #1	Flow	CHAMBER SOLUTION Temp #7	Press #12	SEAL OIL P (psig)
0200	3					232	137	143	6.1	144	165	6.1	267	49	56
0300	3					233	137	143	6.1	147	166	6.1	268	49	56
0400	3		133 HRS TOTAL			237	136	141	6.1	135	166	6.1	269	49	56
0500	3		START			209	136	141	6.1	139	159	6.1	229	29	35
0600	3		1	15		209	136	140	6.1	138	158	6.1	229	29	35
0200	3		2	15		209	137	141	6.1	139	158	6.1	227	29	35
0800	3		3	15		211	137	141	6.1	138	158	6.1	229	30	35
0900	1		4	15		212	136	141	6.1	139	159	6.1	229	30	35
1000	1		5	15		212	136	140	6.1	134	158	6.1	229	30	35
1100	1		6	15		211	136	140	6.1	135	158	6.1	228	30	35
1200	1		7	15		212	137	141	6.1	136	159	6.1	230	30	35
1300	1		8	15		212	137	142	6.1	137	158	6.1	229	30	35
1400	1		9	15		214	139	143	6.1	138	160	6.1	230	30	35
1500	1		10	15		214	136	140	6.1	134	158	6.1	229	30	35
1600	1		11	15		214	137	141	6.1	138	158	6.1	229	30	35
1700	1		12	15		216	137	141	6.1	139	160	6.1	229	30	35
1800	1		13	15		213	137	142	6.1	142	159	6.1	227	29	35
1900	1		14	15		214	137	141	6.1	137	159	6.1	229	29	35
2000	1		15	15		215	138	143	6.1	135	158	6.1	230	30	35
2100	1		16	15		215	138	142	6.1	138	158	6.1	228	29	35
2200	1		17	15		215	138	142	6.1	138	158	6.1	229	30	35
2300	1		18	15		217	138	142	6.1	138	160	6.1	230	30	35

NOTES: 0420: END OF 131 HR RUN. LOWERING TANK TEMP TO 225° + 7° 29psi. 0445 TANK TEMP AT 227° 29psi. START 660 HR RUN. START HR check for 660 HRS. AT 0500.

TOTAL HRS RUN TIME: 18 HRS 15 MIN'S.

4/15

QC Form Approval

SHEET ___ OF ___

(3)

WYLE LABORATORIES

DATA SHEET

Report No. 57505
Page No. 30

CUSTOMER SOUTHERN CALIFORNIA EDISON
Test Title: MSLB
Specimen 75 HP Submersible
Electric Motor
Part No. M/N 7117636003
Job No. 57505
S/N Type (JL6R
Date 4/16/90

SC[illegible]. 5 7 8 9 10

TIME	J-Box Press Ch. No. 3	MOTOR WINDING TEMPERATURES (F) HRS 7	MIN 8	DAYS 10	11	Seal #5	SEAL COOLING WATER T-in #2	T-out #4	Flow	MOTOR COOLING WATER T-in #3	T-out #1	Flow	CHAMBER SOLUTION Temp #9 7	Press #12	SEAL OIL P (psig)
2400	1	19	15			215	138	142	6.1	141	158	6.1	230	30	35
0100	1	20	15			215	138	143	6.1	147	159	6.1	228	30	35
0200	1	21	15			216	139	144	6.1	145	159	6.1	228	29	35
0300	1	22	15			214	138	142	6.1	131	158	6.1	229	29	35
0400	1	23	15			215	139	144	6.1	144	159	6.1	229	29	35
0500	1	24	15	1		216	137	142	6.1	143	159	6.1	230	29	35
0600	1	25	15			213	138	141	6.1	134	158	6.1	228	29	35
0700	1	26	15			214	137	141	6.1	136	157	6.1	228	29	35
0800	1	27	15			214	137	141	6.1	138	157	6.1	229	29	35
0900	1	28	15			212	136	141	6.1	136	156	6.1	228	30	35
1000	1	29	15			214	137	141	6.1	137	158	6.1	229	30	35
1100	1	30	15			213	135	140	6.1	135	156	6.1	228	30	35
1200	1	31	15			214	136	141	6.1	137	157	6.1	229	30	35
1300	1	32	15			216	139	143	6.1	138	155		230	30	35
1400	1	33	15			215	137	141	6.1	136	153		228	29	35
1500	1	34	15			214	137	141	6.1	136	158	6.1	227	29	35
1600	1	35	15			214	136	141	6.1	136	158	6.1	229	30	35
1700	1	36	15			215	138	142	6.1	137	159	6.1	228	29	35
1800	1	37	15			214	138	143	6.1	139	159	6.1	228	30	35
1900	1	38	15			216	140	145	6.1	138	161	6.1	229	30	35
2000	1	39	15			215	142	146	6.1	140	162	6.1	228	29	35
2100	1	40	15			216	141	145	6.1	138	162	6.1	228	30	35

NOTES: TOTAL HRS: 40 HRS 15 MIN
lost flowmeter at 1300 HRS.

4/16
QC Form Approval [illegible]

SHEET ___ OF ___

WYLE LABORATORIES

DATA SHEET

Report No. 57505
Page No. 31

CUSTOMER SOUTHERN CALIFORNIA EDISON
Test Title: MSLB
Specimen 75 HP Submersible
Electric Motor
Part No. M/N 7117636003
Job No. 57505
S/N Type OJL6R
Date 4/16/80

SC 5 7 8 9 10

J-Bool Press

TIME	Ch. No. 5	Hrs 6	Min 7	Days 10	11	Seal #5	SEAL COOLING WATER T-in #2	T-out #4	Flow	MOTOR COOLING WATER T-in #3	T-out #1	Flow	CHAMBER SOLUTION Temp #7	Press #12	SEAL OIL P (psig)
2200	1	41	15			216	139	143	6.1	141	161	6.1	229	30	35
2300	1	42	15			216	139	144	6.1	144	160	6.1	227	29	35
2400	1	43	15			215	138	143	6.1	138	160	6.1	229	29	35
0100	1	44	15			216	142	147	6.1	148	162	6.1	229	29	35
0200	1	45	15			214	139	143	6.1	136	160	6.1	227	29	35
0300	1	46	15			214	138	142	6.1	135	160	6.1	228	29	35
0400	1	47	15			214	138	142	6.1	137	159	6.1	229	29	35
0500	1	48	15	2		215	139	143	6.1	140	160	6.1	229	29	35
0600	1	49	15			215	138	142	6.1	138	161	6.1	229	29	35
0700	1	50	15			212	136	141	6.1	138	158	6.1	227	29	35
0800	1	51	15			213	137	142	6.1	138	159	6.1	228	29	35
0900	1	52	15			212	136	140	6.1	136	158	6.1	228	29	35
1000	1	53	15			213	136	141	6.1	136	158	6.1	229	27	35
1100	1	54	15			214	137	142	6.1	137	158	6.1	227	29	35
1200	1	55	15			214	137	142	6.1	138	159	6.1	228	29	35
1300	1	56	15			214	137	141	6.1	137	158	6.1	227	29	35
1400	1	57	15			216	137	141	6.1	136	159	6.1	229	30	35
1500	1	58	15			215	137	142	6.1	137	159	6.1	228	32	35
1600	1	59	15			213	137	141	6.1	136	158	6.1	228	29	35
1700	1	60	15			214	137	141	6.1	137	158	6.1	227	30	35
1800	1	61	15			216	139	143	6.1	137	160	6.1	228	30	35
1900	1	62	15			216	140	145	6.1	142	160	6.1	229	30	35

NOTES:

4/16 QC Form Approval

4/17

SHEET ___ OF ___

WYLE LABORATORIES

DATA SHEET

Report No 57505
Page No. 32

CUSTOMER SOUTHERN CALIFORNIA EDISON
Test Title: MSLB
Specimen 75 HP Submersible
Electric Motor
Part No. M/N 7117636003

Job No. 57505
S/N Type (JL6R
Date 4/17/90

SCL NO. 5 7 8 9 10

TIME	MTRJ BOX No. PRESS	8	MOTOR WINDING TEMPERATURES (F) HRS	MINS	DAYS	Seal #5	SEAL COOLING WATER T-in #2	T-out #4	Flow	MOTOR COOLING WATER T-in #3	T-out #1	Flow	CHAMBER SOLUTION Temp #7	Press #12	SEAL OIL P (psig)
2000	1		63	15		215	139	143	6.1	138	159	6.1	227	29	35
2100	1		64	15		216	139	143	6.1	140	159	6.1	227	29	35
2200	1		65	15		215	138	142	6.1	138	159	6.1	228	29	35
2300	1		66	15		216	139	143	6.1	139	160	6.1	229	29	35
2400	1		67	15		215	139	143	6.1	138	159	6.1	227	29	35
0100	1		68	15		215	139	143	6.1	140	160	6.1	228	29	35
0200	1		69	15		215	139	143	6.1	137	160	6.1	228	29	35
0300	1		70	15		216	138	143	6.1	146	160	6.1	228	29	35
0400	1		71	15		216	140	144	6.1	135	160	6.1	229	29	35
0500	1		72	15	3	216	138	142	6.1	138	160	6.1	229	29	35
0600	1		73	15		215	137	141	6.1	137	159	6.1	227	29	35
0700	1		74	15		216	139	144	6.1	142	161	6.1	227	29	35
0800	1		75	15		214	136	140	6.1	135	158	6.1	228	29	35
0900	1		76	15		214	135	139	6.1	135	156	6.1	228	29	35
1000	1		77	15		214	136	140	6.1	136	157	6.1	227	29	35
1100	1		78	15		214	136	140	6.1	136	157	6.1	228	30	35
1200	1		79	15		214	136	140	6.1	136	157	6.1	227	29	35
1300	1		80	15		214	135	139	6.1	135	156	6.1	227	28	35
1400	1		81	15		215	138	142	6.1	137	158	6.1	227	30	35
1500	1		82	15		215	138	142	6.1	137	159	6.1	227	30	35
1600	1		83	15		216	138	142	6.1	138	158	6.1	227	29	35
1700	1		84	15		216	137	141	6.1	137	158	6.1	228	30	35

NOTES:

4/17
QC Form Approval 4/18

SHEET ___ OF ___

WYLE LABORATORIES

DATA SHEET

Report No 57505
Page No. 33

CUSTOMER SOUTHERN CALIFORNIA EDISON
Test Title: MSLR
Specimen 75 HP Submersible
Electric Motor
Part No. M/N 7117636003
Job No. 57505
S/N Type JLGR
Date 4/19/84

SCE 5 7 8 9 10

TIME	Ch. No. PRESS	8	HRS	MINS	DAYS	MOTOR WINDING TEMPERATURES (F) Mtr J-Box Seal #5	SEAL COOLING WATER T-in #2	T-out #4	Flow	MOTOR COOLING WATER T-in #3	T-out #1	Flow	CHAMBER SOLUTION Temp #7	Press #12	SEAL OIL P (psig)
4/18															
1800	1		85	15		216	137	142	6.1	137	158	6.1	228	29	35
1900	1		86	15		216	137	142	6.1	137	159	6.1	228	30	35
2000	1		87	15		215	138	142	6.1	137	158	6.1	227	29	35
2100	1		88	15		216	137	142	6.1	137	158	6.1	228	29	35
2200	1		89	15		216	137	142	6.1	137	158	6.1	227	29	35
2300	1		90	15		217	137	142	6.1	137	158	6.1	228	29	35
2400	1		91	15		212	138	142	6.1	138	158	6.1	226	29	35
4/19															
0100	1		92	15		215	137	141	6.1	137	158	6.1	227	29	35
0200	1		93	15		214	138	142	6.1	137	158	6.1	226	29	35
0300	1		94	15		215	137	142	6.1	137	159	6.1	227	29	35
0400	1		95	15		215	138	142	6.1	137	158	6.1	228	29	35
0500	1		96	15	4	215	138	142	6.1	137	159	6.1	228	29	35
0600	1		97	15		214	137	142	6.1	137	158	6.1	226	29	35
0200	1		98	15		214	138	142	6.1	137	158	6.1	227	29	35
0800	1		99	15		215	138	142	6.1	137	158	6.1	228	29	35
0900	1		100	15		215	138	142	6.1	138	159	6.1	229	30	35
1000	1		101	15		214	138	142	6.1	138	158	6.1	227	29	35
1100	1		102	15		214	137	142	6.1	137	158	6.1	227	30	35
1200	1		103	15		214	138	142	6.1	138	158	6.1	228	30	35
1300	1		104	15		215	138	142	6.1	138	159	6.1	228	30	35
1400	1		105	15		214	138	142	6.1	137	159	6.1	228	30	35
1500	1		106	15		214	138	142	6.1	137	159	6.1	228	30	35

NOTES:

QC Form Approval

SHEET ____ OF ____

WYLE LABORATORIES

DATA SHEET

Report No. 57505
Page No. 34

CUSTOMER SOUTHERN CALIFORNIA EDISON
Test Title: MSLB
Specimen 75 HP Submersible
Electric Motor
Part No. M/N 7117636003
Job No. 57505
S/N Typ: CJL6B
Date 4/19/92

SCE . 5 7 8 9 10

	MOTOR WINDING TEMPERATURES (F)					SEAL COOLING WATER				MOTOR COOLING WATER			CHAMBER SOLUTION		SEAL OIL
TIME	MTR J-BOX PRESS No.	8	HRS	MINS	DAYS	Seal #5	T-in #2	T-out #4	Flow	T-in #3	T-out #1	Flow	Temp #6 7	Press #12	P (psig)
4/19 1600	1		107	15		213	138	142	6.1	137	159	6.1	228	30	35
1700	1		108	15		213	138	142	6.1	138	159	6.1	228	30	35
1800	1		109	15		214	138	142	6.1	138	159	6.1	229	30	35
1900	1		110	15		213	138	142	6.1	138	159	6.1	227	29	35
2000	1		111	15		212	137	142	6.1	137	159	6.1	227	30	23
2100	1		112	15		213	137	142	6.1	137	159	6.1	227	29	35
2200	1		113	15		212	138	142	6.1	138	159	6.1	227	29	35
2300	1		114	15		213	138	142	6.1	138	159	6.1	227	29	35
2400	1		115	15		213	137	142	6.1	137	159	6.1	227	29	35
4/20 0100	1		116	15		213	138	142	6.1	138	159	6.1	227	29	35
0200	1		117	15		212	137	142	6.1	137	159	6.1	227	29	35
0300	1		118	15		215	138	142	6.1	138	159	6.1	227	29	35
0400	1		119	15		215	138	143	6.1	138	159	6.1	227	29	35
0500	1		120	15	5	214	138	142	6.1	138	159	6.1	227	29	35
0600	1		121	15		214	138	142	6.1	138	159	6.1	227	29	35
0700	1		122	15		214	138	142	6.1	138	159	6.1	227	29	35
0800	1		123	15		214	138	142	6.1	138	159	6.1	227	29	35
0900	1		124	15		214	138	142	6.1	138	159	6.1	227	29	35
1000	1		125	15		213	137	142	6.1	137	159	6.1	227	30	35
1100	1		126	15		214	138	142	6.1	138	159	6.1	229	30	35
1200	1		127	15		214	138	142	6.1	138	159	6.1	229	30	35
1300	1		128	15		215	137	142	6.1	138	159	6.1	228	30	35

NOTES:

WYLE

QC Form Approval

SHEET ____ OF ____

WYLE LABORATORIES

DATA SHEET

Report No. 57505
Page No. 35

CUSTOMER SOUTHERN CALIFORNIA EDISON
Test Title: MSLB
Specimen 75 HP Submersible
Electric Motor
Part No. M/N 7117636003

Job No. 57505
S/N Type CJL6B
Date 4/20/80

SCE No. 5 7 8 9 10

TIME	MOTOR No. J-BOX MESS	8	MOTOR WINDING TEMPERATURES (F) HRS ~~9~~	MINS ~~10~~	DAYS ~~11~~	Seal #5	SEAL COOLING WATER T-in #2	T-out #4	Flow	MOTOR COOLING WATER T-in #3	T-out #1	Flow	CHAMBER SOLUTION Temp #7	Press #12	SEAL OIL P (psig)
1400	1		129	15		215	137	142	6.1	137	159	6.1	229	30	35
1500	1		130	15		216	137	142	6.1	137	159	6.1	227	29	35
1600	1		131	15		217	137	141	6.1	137	159	6.1	227	29	35
1700	1		132	15		220	137	142	6.1	137	159	6.1	229	30	35
1800	1		133	15		219	138	142	6.1	137	159	6.1	228	30	35
1900	1		134	15		218	137	141	6.1	137	159	6.1	229	30	35
2000	1		135	15		218	138	142	6.1	138	159	6.1	229	30	35
2100	1		136	15		217	137	142	6.1	137	159	6.1	228	29	35
2200	1		137	15		217	137	142	6.1	137	159	6.1	228	29	35
2300	1		138	15		217	137	142	6.1	137	159	6.1	228	29	35
2400	1		139	15		217	137	141	6.1	137	159	6.1	228	29	35
0100	1		140	15		218	138	142	6.1	138	159	6.1	228	29	35
0200	1		141	15		218	138	142	6.1	138	159	6.1	229	29	35
0300	1		142	15		218	138	142	6.1	138	160	6.1	229	29	35
0400	1		143	15		218	138	142	6.1	138	160	6.1	229	29	35
0500	1		144	15	5	218	138	142	6.1	138	160	6.1	229	29	35
0600	1		145	15		218	138	142	6.1	138	159	6.1	228	29	35
0700	1		146	15		219	137	141	6.1	137	159	6.1	228	29	35
0800	1		147	15		220	137	142	6.1	137	158	6.1	227	29	35
0900	1		148	15		219	138	142	6.1	138	157	6.1	227	29	35
1000	1		149	15		219	138	142	6.1	137	156	6.1	227	30	35
1100	1		150	15		220	137	142	6.1	137	157	6.1	228	30	35

NOTES:

4/20

4/21

QC Form Approval

SHEET ___ OF ___

SCE 5 7 8 9 10

WYLE LABORATORIES

DATA SHEET

Report No. 57505
Page No. 36

Customer: SOUTHERN CALIFORNIA EDISON
Test Title: MSLB
Specimen: 75 HP Submersible
Electric Motor
Part No. M/N 7117636003
Job No. 57505
S/N Type CJL6B
Date 4/21/80

MIC J-Box Press

TIME	MOTOR WINDING TEMPERATURES (F) Ch. No.	HRS	MINS	DAYS	SEAL COOLING WATER Seal #5	T-in #2	T-out #4	Flow	MOTOR COOLING WATER T-in #3	T-out #1	Flow	CHAMBER SOLUTION Temp #7	Press #12	SEAL OIL P (psig)
4/21 1200	1	151	15		218	137	141	6.1	137	156	6.1	226	29	35
1300	1	152	15		218	138	142	6.1	137	156	6.1	226	29	35
1400	1	153	15		216	140	145	6.1	140	159	6.1	226	29	35
1500	1	154	15		217	136	140	6.1	136	156	6.1	226	29	35
1600	1	155	15		217	136	140	6.1	136	156	6.1	226	29	35
1700	1	156	15		217	137	141	6.1	136	156	6.1	227	29	35
1800	1	157	15		218	136	141	6.1	136	157	6.1	227	29	35
1900	1	158	15		219	137	141	61	136	157	6.1	228	30	35
2000	1	159	15		218	137	141	6.1	137	157	6.1	228	29	35
2100	1	160	15		217	136	140	6.1	136	157	6.1	228	29	35
2200	1	161	15		218	136	140	6.1	135	157	6.1	228	29	35
2300	1	162	15		218	137	141	6.1	136	156	6.1	228	29	35
2400	1	163	15		216	136	141	6.1	136	157	6.1	227	29	35
4/22 0100	1	164	15		218	136	141	6.1	136	157	6.1	227	29	35
0200	1	165	15		219	136	140	6.1	136	157	6.1	228	29	35
0300	1	166	15		220	136	141	6.1	136	157	6.1	229	29	35
0400	1	167	15		219	136	141	6.1	136	156	6.1	227	29	35
0500	1	168	15	6	213	136	140	6.1	136	156	6.1	228	29	35
0600	1	169	15		213	136	141	6.1	136	156	6.1	227	29	35
0700	1	170	15		217	137	141	6.1	136	157	6.1	229	29	35
0800	1	171	15		218	136	141	6.1	136	156	6.1	227	30	35
0900	1	172	15		219	136	141	6.1	136	157	6.1	228	30	35

NOTES:

QC Form Approval

SHEET ____ OF ____

WYLE LABORATORIES

DATA SHEET

Report No. 57505
Page No 37

CUSTOMER SOUTHERN CALIFORNIA EDISON
Test Title: MSLB
Specimen 75 HP Submersible 57505
Electric Motor
Part No. M/N 7117636003 S/N Type CJL6B
Job No.
Date 4/22/82

SCE 5 7 8 9 10

TIME	mtr J-box press No.	MOTOR WINDING TEMPERATURES (F) HRS	MINS	DAYS	SEAL COOLING WATER Seal #5	T-in #2	T-out #4	Flow	MOTOR COOLING WATER T-in #3	T-out #1	Flow	CHAMBER SOLUTION Temp #27	Press #12	SEAL OIL P (psig)
4/21 1000	1	173	15		219	137	141	6.1	136	156	6.1	228	30	35
1100	1	174	15		218	136	141	6.1	136	157	6.1	227	30	35
1200	1	175	15		218	136	140	6.1	136	156	6.1	227	29	35
1300	1	176	15		217	136	140	6.1	136	156	6.1	227	29	35
1400	1	177	15		217	136	140	6.1	135	156	6.1	227	29	35
1500	1	178	15		217	136	140	6.1	136	157	6.1	227	29	35
1600	1	179	15		217	137	141	6.1	137	158	6.1	227	29	35
1700	1	180	15		218	137	141	6.1	137	158	6.1	228	29	35
1800	1	181	15		218	136	141	6.1	136	158	6.1	228	29	35
1900	1	182	15		215	136	140	6.1	136	158	6.1	228	29	35
2000	1	183	15		216	136	141	6.1	136	158	6.1	229	29	35
2100	1	184	15		216	136	141	6.1	136	158	6.1	228	29	35
2200	1	185	15		215	137	141	6.1	137	158	6.1	227	29	35
2300	1	186	15		212	136	141	6.1	136	158	6.1	227	29	35
2400	1	187	15		216	136	140	6.1	136	158	6.1	229	29	35
4/22 0100	1	188	15		220	136	141	6.1	136	158	6.1	228	29	35
0200	1	189	15		220	137	141	6.1	136	158	6.1	228	29	35
0300	1	190	15		220	137	141	6.1	136	158	6.1	228	29	35
0400	1	191	15		220	136	140	6.1	135	158	6.1	228	29	35
0500	1	192	15	6	220	137	141	6.1	137	158	6.1	227	29	35
0600	1	193	15		220	136	140	6.1	136	158	6.1	227	29	35
0700	1	194	15		221	136	140	6.1	136	158	6.1	229	30	35

NOTES:

QC Form Approval

SHEET ___ OF ___

WYLE LABORATORIES

DATA SHEET

Report No. 57505
Page No. 38

CUSTOMER SOUTHERN CALIFORNIA EDISON
Test Title: MSLB
Specimen 75 HP Submersible
Electric Motor
Part No. M/N 7117636003

Job No. 57505
S/N Type CJL6B
Date 4/23/80

SC[illegible]. 5 7 8 9 10

	MTR J-Box		MOTOR WINDING TEMPERATURES (F)				SEAL COOLING WATER			MOTOR COOLING WATER			CHAMBER SOLUTION		SEAL OIL
TIME	~~Ch.~~ No. ~~7~~	~~8~~	HRS ~~9~~	M/W ~~10~~	DAYS ~~11~~	Seal #5	T-in #2	T-out #4	Flow	T-in #3	T-out #1	Flow	Temp #~~6~~7	Press #12	P (psig)
4/23 0800	1		195	15	6	220	136	141	6.1	136	158	6.1	228	29	35
0900	1		196	15		220	137	141	6.1	137	158	6.1	228	30	35
1000	1		197	15		220	137	141	6.1	137	158	6.1	228	30	35
1100	1		198	15		220	137	142	6.1	137	159	6.1	228	29	35
1200	1		199	15		222	136	141	6.1	136	158	6.1	229	30	35
1300	1		200	15		222	137	141	6.1	137	158	6.1	228	29	35
1400	1		201	15		221	137	141	6.1	136	159	6.1	228	29	35
1500	1		202	15		221	137	141	6.1	136	159	6.1	230	30	35
1600	1		203	15		229	137	141	6.1	137	159	6.1	229	29	35
1700	1		204	15		218	137	141	6.1	137	159	6.1	229	30	35
1800	1		205	15		220	137	142	6.1	137	158	6.1	229	30	35
1900	1		206	15		219	137	141	6.1	137	158	6.1	228	29	35
2000	1		207	15		218	136	140	6.1	136	157	6.1	227	29	35
2100	1		208	15		220	137	141	6.1	136	159	6.1	229	29	35
2200	1		209	15		221	136	141	6.1	136	158	6.1	228	29	35
2300	1		210	15		221	135	140	6.1	135	158	6.1	228	29	35
2400	1		211	15		222	136	141	6.1	136	158	6.1	227	29	35
4/24 0100	1		212	15		222	136	140	6.1	136	158	6.1	229	29	35
0200	1		213	15		221	136	140	6.1	136	158	6.1	228	29	35
0300	1		214	15		220	136	140	6.1	136	158	6.1	227	29	35
0400	1		215	15		222	136	141	6.1	136	158	6.1	229	29	35
0500	1		216	15	7	221	136	140	6.1	136	158	6.1	228	29	35

NOTES:

QC Form Approval

SHEET ____ OF ____

WYLE LABORATORIES

DATA SHEET

Report No. 57505
Page No. 39

CUSTOMER SOUTHERN CALIFORNIA EDISON
Test Title: MSLB
Specimen 75 HP Submersible
Electric Motor
Part No. M/N 7117636003

Job No. 57505
S/N Type CJL6B
Date 4/24/90

SCE No. 5 7 8 9 10

TIME	MTR J-Box No.		MOTOR WINDING TEMPERATURES (F) Hrs	min	Days	SEAL COOLING WATER Seal #5	T-in #2	T-out #4	Flow	MOTOR COOLING WATER T-in #3	T-out #1	Flow	CHAMBER SOLUTION Temp #7	Press #12	SEAL OIL P (psig)
0600	1		217	15	7	222	136	141	6.1	136	158	6.1	227	29	35
0700	1		218	15		222	137	141	6.1	137	158	6.1	227	29	35
0800	1		219	15		225	137	141	6.1	137	159	6.1	229	30	35
0900	1		220	15		227	137	141	6.1	137	159	6.1	229	30	35
1000	1		221	15		228	137	141	6.1	137	158	6.1	229	30	35
1100	1		222	15		227	136	140	6.1	136	159	6.1	228	29	35
1200	1		223	15		230	137	141	6.1	137	159	6.1	228	29	35
1300	1		224	15		230	137	141	6.1	137	158	6.1	229	30	35
1400	1		225	15		235	137	141	6.1	137	158	6.1	227	29	35
1500	1		226	15		231	136	140	6.1	136	158	6.1	228	30	35
1600	1		227	15		225	136	140	6.1	136	158	6.1	228	30	35
1700	1		228	15		224	136	140	6.1	136	158	6.1	227	30	35
1800	1		229	15		226	137	141	6.1	136	158	6.1	228	30	35
1900	1		230	15		225	137	141	6.1	136	158	6.1	227	30	35
2000	1		231	15		225	137	141	6.1	136	159	6.1	229	30	35
2100	1		232	15		225	137	141	6.1	136	159	6.1	229	30	35
2200	1		233	15		227	136	140	6.1	136	158	6.1	228	29	35
2300	1		234	15		226	137	141	6.1	137	159	6.1	228	29	35
2400	1		235	15		226	137	141	6.1	136	159	6.1	228	29	35
0100	1		236	15		227	136	141	6.1	136	158	6.1	228	29	35
0200	1		237	15		226	136	140	6.1	136	159	6.1	228	29	35
0300	1		238	15		226	136	140	6.1	136	159	6.1	228	29	35

NOTES:

4/24

4/25

QC Form Approval

SHEET ___ OF ___

WYLE LABORATORIES

DATA SHEET

Report No. 57505

Page No. 40

CUSTOMER SOUTHERN CALIFORNIA EDISON

Test Title: MSLB 57505

Specimen 75 HP Submersible Job No. Type CJL6B

Electric Motor S/N

Part No. M/N 7117636003 Date 4/25/80

SCE No. 5 7 8 9 10

TIME	MOTOR WINDING TEMPERATURES (F) J-Box Ch. No.		Hrs	Min	Day	SEAL COOLING WATER Seal #5	T-in #2	T-out #4	Flow	MOTOR COOLING WATER T-in #3	T-out #1	Flow	CHAMBER SOLUTION Temp #7	Press #12	SEAL OIL P (psig)
0400	1		239	15		226	137	141	6.1	137	158	6.1	228	29	35
0500	1		240	15	8	225	137	141	6.1	136	158	6.1	228	29	35
0600	1		241	15		223	137	141	6.1	136	158	6.1	228	29	35
0200	1		242	15		224	137	141	6.1	137	158	6.1	228	29	35
0800	1		243	15		221	136	141	6.1	136	159	6.1	228	29	35
0900	1		244	15		223	137	141	6.1	136	159	6.1	228	29	35
1000	1		245	15		217	137	141	6.1	137	159	6.1	228	29	35
1100	1		246	15		225	137	141	6.1	136	158	6.1	227	29	35
1200	1		247	15		226	136	140	6.1	136	159	6.1	228	30	35
1300	1		248	15		223	136	140	6.1	136	159	6.1	229	30	35
1400	1		249	15		222	136	140	6.1	136	158	6.1	229	30	35
1500	1		250	15		222	137	141	6.1	136	158	6.1	227	29	35
1600	1		251	15		221	136	140	6.1	136	158	6.1	228	29	35
1700	1		252	15		222	136	140	6.1	136	158	6.1	228	29	35
1800	1		253	15		224	136	140	6.1	136	158	6.1	228	29	35
1900	1		254	15		223	136	140	6.1	136	158	6.1	227	30	35
2000	1		255	15		224	137	141	6.1	136	158	6.1	229	30	35
2100	1		256	15		225	136	140	6.1	136	158	6.1	228	30	35
2200	1		257	15		224	136	141	6.1	136	158	6.1	228	29	35
2300	1		258	15		224	136	140	6.1	136	158	6.1	228	29	35
2400	1		259	15		222	136	140	6.1	136	158	6.1	228	29	35
0100	1		260	15		224	136	141	6.1	136	158	6.1	228	29	35

NOTES:

4/25 QC Form Approval

SHEET 4/26 OF

WYLE LABORATORIES

DATA SHEET

Report No. 57505
Page No. 41

CUSTOMER SOUTHERN CALIFORNIA EDISON
Test Title: MSLB
Specimen 75 HP Submersible
Electric Motor
Part No. M/N 7117636003

Job No. 57505
S/N Type CJL6R
Date 4/26/80

SCE No. 5 7 8 9 10

	MOTOR WINDING TEMPERATURES (F)					SEAL COOLING WATER				MOTOR COOLING WATER			CHAMBER SOLUTION		SEAL OIL
TIME	Ch. No. 5-Bal		Hrs	Min	Day	Seal #5	T-in #2	T-out #4	Flow	T-in #3	T-out #1	Flow	Temp #7	Press #12	P (psig)
0200	1		261	15		224	136	140	6.1	136	158	6.1	228	25	35
0300	1		262	15		224	136	141	6.1	136	158	6.1	228	29	35
0400	1		263	15		222	137	141	6.1	137	159	6.1	228	29	35
0500	1		264	15	10	226	136	140	6.1	136	158	6.1	228	29	35
0600	1		265	15		224	136	141	6.1	136	159	6.1	228	29	35
0700	1		266	15		225	136	141	6.1	136	158	6.1	228	29	35
0800	1		267	15		225	137	141	6.1	136	158	6.1	228	29	35
0900	1		268	15		225	137	141	6.1	137	159	6.1	228	29	35
1000	1		269	15		226	137	141	6.1	136	158	6.1	227	29	35
1100	1		270	15		226	136	140	6.1	136	159	6.1	227	29	35
1200	1		271	15		226	137	141	6.1	136	159	6.1	228	30	35
1300	1		272	15		225	136	141	6.1	136	158	6.1	228	30	35
1400	1		273	15		223	137	141	6.1	137	158	6.1	227	30	35
1500	1		274	15		224	137	141	6.1	136	159	6.1	229	30	35
1600	1		275	15		224	136	140	6.1	136	158	6.1	227	29	35
1700	1		276	15		223	136	140	6.1	136	158	6.1	225	29	35
1800	1		277	15		224	136	140	6.1	136	158	6.1	228	30	35
1900	1		278	15		224	137	141	6.1	136	158	6.1	227	30	35
2000	1		279	15		223	136	140	6.1	136	158	6.1	227	30	35
2100	1		280	15		223	135	140	6.1	135	157	6.1	226	29	35
2200	1		281	15		223	136	140	6.1	136	158	6.1	226	29	35
2300	1		282	15		224	136	141	6.1	136	158	6.1	228	29	35

NOTES:

4/26 SC Form Approval

SHEET ____ OF ____

WYLE LABORATORIES

DATA SHEET

Report No. 57505

CUSTOMER SOUTHERN CALIFORNIA EDISON

Test Title: MSLB

Specimen 75 HP Submersible

Electric Motor

Part No. M/N 7117636003

Job No. 57505

S/N Type CJL6B

Date 5/12/82

SCE No. 5 7 8 9 10

	MOTOR WINDING TEMPERATURES (F)					SEAL COOLING WATER				MOTOR COOLING WATER			CHAMBER SOLUTION		SEAL OIL
	J-Box Ch. No.														
TIME	3	8	HRS 9	MIN 10	DAY 11	Seal #5	T-in #2	T-out #4	Flow	T-in #3	T-out #1	Flow	Temp #07	Press #12	P (psig)
2400	1		283	15	11	223	136	140	6.1	136	158	6.1	226	29	35
0100	1		284	15		224	136	140	6.1	136	159	6.1	228	29	35
0200	1		285	15		224	136	140	6.1	136	158	6.1	227	29	35
0300	1		286	15		224	136	141	6.1	136	158	6.1	228	29	35
0400	1		287	15		224	136	140	6.1	136	158	6.1	227	29	35
0500	1		288	15	12	224	136	140	6.1	136	158	6.1	227	29	35
0600	1		289	15		224	136	140	6.1	136	158	6.1	227	29	35
0700	1		290	15		224	136	140	6.1	136	159	6.1	228	29	35
0800	1		291	15		225	137	141	6.1	137	159	6.1	228	29	35
0900	1		292	15		225	137	141	6.1	136	159	6.1	228	29	35
1000	1		293	15		225	137	141	6.1	136	159	6.1	227	29	35
1100	1		294	15		225	137	141	6.1	137	159	6.1	228	30	35
1200	1		295	15		225	137	141	6.1	137	159	6.1	227	30	35
1300	1		296	15		224	137	136	6.1	136	158	6.1	227	29	35
1400	1		297	15		225	137	141	6.1	137	159	6.1	228	30	35
1500	1		298	15		224	136	140	6.1	136	158	6.1	227	29	35
1600	1		299	15		225	136	140	6.1	136	158	6.1	227	30	35
1700	1		300	15		225	136	140	6.1	136	158	6.1	227	30	35
1800	1		301	15		226	136	140	6.1	136	158	6.1	228	30	35
1900	1		302	15		226	136	141	6.1	136	159	6.1	228	30	35
2000	1		303	15		226	136	140	6.1	136	158	6.1	227	29	35
2100	1		304	15		226	136	140	6.1	136	158	6.1	228	29	35

NOTES:

4/26 QC Form Approval

SHEET ____ OF ____

WYLE LABORATORIES

DATA SHEET

Report No. 57505
Page No. 43

CUSTOMER SOUTHERN CALIFORNIA EDISON
Test Title: MSLB
Specimen 75 HP Submersible
Electric Motor
Part No. M/N 7117636003

57505
Job No.
S/N
Type CJL6R
Date 4/27/82

SCE No. 5 7 8 9 10

TIME	J-Box Ch. No. 5	6	MOTOR WINDING TEMPERATURES (F) HRS 2	MIN 30	DAYS 1	SEAL COOLING WATER Seal #5	T-in #2	T-out #4	Flow	MOTOR COOLING WATER T-in #3	T-out #1	Flow	CHAMBER SOLUTION Temp #67	Press #12	SEAL OIL P (psig)
2200	1		305	15		226	136	140	6.1	136	158	6.1	228	29	35
2300	1		306	15		225	136	140	6.1	136	158	6.1	227	29	35
2400	1		307	15		226	136	141	6.1	136	158	6.1	227	29	35
0100	1		308	15		227	136	140	6.1	136	159	6.1	229	29	35
0200	1		309	15		226	136	140	6.1	136	158	6.1	228	29	35
0300	1		310	15		226	136	140	6.1	136	158	6.1	227	29	35
0400	1		311	15		227	136	140	6.1	136	158	6.1	229	29	35
0500	1		312	15	13	226	136	140	6.1	136	158	6.1	228	30	35
0600	1		313	15		226	136	140	6.1	136	158	6.1	227	30	35
0700	1		314	15		225	136	140	6.1	135	158	6.1	227	30	35
0800	1		315	15		224	135	140	6.1	135	157	6.1	226	30	35
0900	1		316	15		225	137	141	6.1	137	158	6.1	227	30	35
1000	1		317	15		225	136	141	6.1	136	159	6.1	228	30	35
1100	1		318	15		227	136	141	6.1	136	159	6.1	229	30	35
1200	1		319	15		228	137	141	6.1	137	159	6.1	229	30	35
1300	1		320	15		228	136	140	6.1	136	159	6.1	227	29	35
1400	1		321	15		229	137	141	6.1	137	159	6.1	229	30	35
1500	1		322	15		228	136	140	6.1	136	158	6.1	227	29	35
1600	1		323	15		227	135	139	6.1	135	157	6.1	226	29	35
1700	1		324	15		228	138	142	6.1	138	159	6.1	226	29	35
1800	1		325	15		228	138	142	6.1	138	160	6.1	227	29	35
1900	1		326	15		230	139	143	6.1	138	161	6.1	229	30	35

NOTES:

QC Form Approval #38

SHEET ____ OF ____

WYLE LABORATORIES

DATA SHEET

CUSTOMER SOUTHERN CALIFORNIA EDISON
Test Title: MSLB
Specimen 75 HP Submersible
Electric Motor
Part No. M/N 7117636003

Job No. 57505
S/N Type CJL6B
Date 4/28/90

SCE No. 5 7 8 9 10

TIME	MOTOR WINDING TEMPERATURES (F) J-BOX	8	HRS	MINS	DAYS	SEAL COOLING WATER Seal #5	T in #2	T out #4	Flow	MOTOR COOLING WATER T in #3	T out #1	Flow	CHAMBER SOLUTION Temp #7	Press #12	SEAL OIL P (psig)
4/28 2000	1		327	15	13	234	138	142	6.1	137	161	6.1	231	30	35
2100	1		328	15		234	138	142	6.1	138	161	6.1	233	30	35
2200	1		329	15		233	138	143	6.1	138	161	6.1	233	30	35
2300	1		330	15		231	138	142	6.1	138	162	6.1	234	30	35
2400	1		331	15		233	138	143	6.1	138	162	6.1	233	30	35
0100	1		332	15		233	138	143	6.1	138	161	6.1	233	30	35
0200	1		333	15		234	139	143	6.1	138	162	6.1	234	30	35
0300	1		334	15		233	138	143	6.1	138	161	6.1	233	29	35
0400	1		335	15		232	138	143	6.1	138	161	6.1	232	29	35
0500	1		336	15	14	230	139	143	6.1	138	162	6.1	233	29	35
0600	1		337	15		232	138	143	6.1	138	161	6.1	233	29	35
0700	1		338	15		232	138	143	6.1	138	162	6.1	234	29	35
0800	1		339	15		231	138	143	6.1	138	162	6.1	233	29	35
0900			340	15		230	139	143	6.1	139	162	6.1	230	29	35
1000	1		341	15		228	139	143	6.1	138	161	6.1	229	29	35
1100	1		342	15		228	138	142	6.1	138	160	6.1	228	29	35
1200	1		343	15		228	138	143	6.1	138	160	6.1	229	29	35
1300	1		344	15		227	138	142	6.1	138	160	6.1	229	29	35
1400	1		345	15		226	137	142	6.1	137	160	6.1	229	29	35
1500	1		346	15		227	138	143	6.1	138	160	6.1	229	29	35
1600	1		347	15		226	138	142	6.1	138	160	6.1	228	30	35
1700	1		348	15		227	138	142	6.1	137	160	6.1	229	30	35

NOTES:

QC Form Approval 4/29

SHEET ___ OF ___

WYLE LABORATORIES

DATA SHEET

Report No. 57505
Page No. 45

CUSTOMER SOUTHERN CALIFORNIA EDISON
Test Title: MSLB
Specimen 75 HP Submersible
Electric Motor
Part No. M/N 7117636003

Job No. 57505
S/N Type CJL6B
Date 4/29/90

SCE No. 5 7 8 9 10

TIME	MOTOR WINDING TEMPERATURES (F) J-BOX No.	8	HRS	MINS	DAYS	Seal #5	SEAL COOLING WATER T in #2	T out #4	Flow	MOTOR COOLING WATER T in #3	T out #1	Flow	CHAMBER SOLUTION Temp #7	Press #12	SEAL OIL P (psig)
4/29 1800	1		349	15	14	227	138	142	6.1	137	160	6.1	228	29	35
1900	1		350	15		233	137	141	6.1	137	160	6.1	229	29	35
2000	1		351	15		231	138	142	6.1	137	160	6.1	228	30	35
2100	1		352	15		230	138	142	6.1	137	160	6.1	228	30	35
2200	1		353	15		232	138	142	6.1	137	160	6.1	227	29	35
2300	1		354	15		231	137	141	6.1	137	160	6.1	228	29	35
2400	1		355	15		240	138	142	6.1	137	161	6.1	227	29	35
4/30 0100	1		356	15		245	138	142	6.1	137	160	6.1	228	29	35
0200	1		357	15		251	138	142	6.1	138	160	6.1	227	29	35
0300	1		358	15		255	138	143	6.1	138	161	6.1	229	29	35
0400	1		359	15		255	138	143	6.1	138	160	6.1	228	29	35
0500	1		360	15	15	250	138	142	6.1	138	161	6.1	227	29	35
0600	1		361	15		249	137	142	6.1	137	161	6.1	227	29	35
0700	1		362	15		240	138	142	6.1	138	161	6.1	229	29	35
0800	1		363	15		247	138	142	6.1	138	161	6.1	229	29	35
0900	1		364	15		247	138	143	6.1	138	160	6.1	229	29	35
1000	1		365	15		247	138	142	6.1	138	160	6.1	227	29	35
1100	1		366	15		243	138	143	6.1	138	160	6.1	229	30	35
1200	1		367	15		247	138	142	6.1	138	160	6.1	228	29	35
1300	1		368	15		237	138	143	6.1	138	160	6.1	229	30	35
1400	1		369	15		251	138	143	6.1	138	161	6.1	229	30	35
1500	1		370	15		249	138	142	6.1	138	160	6.1	228	29	35

NOTES:

QC Form Approval

SHEET ____ OF ____

WYLE LABORATORIES

DATA SHEET

Report No. 57505
Page No. 46

CUSTOMER SOUTHERN CALIFORNIA EDISON
Test Title: MSLB
Specimen 75 HP Submersible
Electric Motor
Part No. M/N 7117636003

Job No. 57505
S/N Type CJL6B
Date 4/30/90

SCE No. 5 7 8 9 10

	MOTOR WINDING TEMPERATURES (F)					SEAL COOLING WATER				MOTOR COOLING WATER			CHAMBER SOLUTION		SEAL OIL
TIME	J-BOX	8	HRS	MINS	DAYS	Seal #5	T in #2	T out #4	Flow	T in #3	T out #1	Flow	Temp #9	Press #12	P (psig)
4/30 1600	1		371	15	15	249	138	143	6.1	138	161	6.1	227	29	35
1700	1		372	15		251	138	142	6.1	138	161	6.1	229	29	35
1800	1		373	15		251	138	142	6.1	138	160	6.1	228	29	35
1900	1		374	15		252	138	142	6.1	137	161	6.1	229	30	35
2000	1		375	15		248	138	142	6.1	137	160	6.1	228	29	35
2100	1		376	15		251	137	142	6.1	137	160	6.1	227	29	35
2200	1		377	15		246	137	142	6.1	137	160	6.1	229	29	35
2300	1		378	15		245	138	142	6.1	137	160	6.1	229	29	35
2400	1		379	15		252	138	142	6.1	137	161	6.1	229	29	35
5/1 0100	1		380	15		247	138	142	6.1	138	160	6.1	228	29	35
0200	1		381	15		248	138	142	6.1	138	160	6.1	228	29	35
0300	1		382	15		246	138	143	6.1	138	160	6.1	227	29	35
0400	1		383	15		246	138	143	6.1	138	161	6.1	229	29	35
0500	1		384	15	16	244	138	142	6.1	137	160	6.1	229	29	35
0600	1		385	15		227	138	143	6.1	138	160	6.1	229	29	35
0700	1		386	15		232	138	142	6.1	138	160	6.1	229	29	35
0800	1		387	15		233	138	142	6.1	137	161	6.1	229	29	35
0900	1		388	15		232	138	142	6.1	138	160	6.1	226	29	35
1000	1		389	15		234	138	142	6.1	137	160	6.1	228	30	35
1100	1		390	15		234	138	142	6.1	138	160	6.1	229	29	35
1200	1		391	15		234	138	142	6.1	138	161	6.1	229	29	35
1300	1		392	15		234	138	143	6.1	138	160	6.1	229	29	35

NOTES:

QC Form Approval

SHEET ____ OF ____

WYLE LABORATORIES

DATA SHEET

Report No. 57505
Page No. 47

CUSTOMER SOUTHERN CALIFORNIA EDISON
Test Title: MSLB 57505
Specimen 75 HP Submersible Type CJI6B
Part No. M/N 7117636003 Electric Motor
Job No. S/N
Date 5/1/90

SCE No. 5 7 8 9

	MOTOR WINDING TEMPERATURES (F)					SEAL COOLING WATER				MOTOR COOLING WATER			CHAMBER SOLUTION		SEAL OIL
TIME	THRUST 7	THRUST 8	HRS	MINS	DAYS	Seal #5	T in #2	T out #4	Flow	T in #3	T out #1	Flow	Temp #7	Press #12	P (psig)
1400	1		393	15	16	234	138	143	6.1	138	161	6.1	230	30	35
1500	1		394	15		233	139	143	6.1	138	161	6.1	228	29	35
1600	1		395	15		232	138	142	6.1	137	160	6.1	228	29	35
1700	1		396	15		232	138	142	6.1	137	160	6.1	228	29	35
1800	1		397	15		233	138	142	6.1	138	161	6.1	229	29	35
1900	1		398	15		232	138	143	6.1	138	160	6.1	228	30	35
2000	1		399	15		232	137	142	6.1	137	160	6.1	228	29	35
2100	1		400	15		232	137	142	6.1	137	160	6.1	228	29	35
2200	1		401	15		233	138	142	6.1	138	160	6.1	229	29	35
2300	1		402	15		233	138	142	6.1	138	160	6.1	229	29	35
2400	1		403	15		233	137	141	6.1	137	160	6.1	227	29	35
0100	1		404	15		233	137	141	6.1	137	160	6.1	228	29	35
0200	1		405	15		233	138	142	6.1	137	160	6.1	229	29	35
0300	1		406	15		246	138	142	6.1	137	161	6.1	229	29	35
0400			407	15		251	138	143	6.1	138	161	6.1	229	29	35
0500	1		408	15	17	249	137	142	6.1	137	160	6.1	227	29	35
0600	1		409	15		251	138	142	6.1	137	160	6.1	227	29	35
0700	1		410	15		249	138	142	6.1	138	161	6.1	229	30	35
0800	1		411	15		255	138	142	6.1	137	160	6.1	227	30	35
0900	1		412	15		255	138	143	6.1	138	161	6.1	228	30	35
1000	1		413	15		245	139	143	6.1	138	161	6.1	229	30	35
1100	1		414	15		255	137	142	6.1	137	160	6.1	228	29	35

5/1

5/2

NOTES:

QC Form Approval

SHEET ____ OF ____

WYLE LABORATORIES

DATA SHEET

Report No. 57505

Page No. 48

CUSTOMER SOUTHERN CALIFORNIA EDISON

Test Title: MSLB

Specimen 75 HP Submersible

Electric Motor

Part No. M/N 7117636003

Job No. 57505

S/N Type CJ16B

Date 5/2/90

SCE No. 5 7 8 9 10

TIME	MOTOR WINDING TEMPERATURES (F) J-Box		HRS	MW	DAYS	SEAL COOLING WATER Seal #5	T-in #2	T out #4	Flow	MOTOR COOLING WATER T-in #3	T out #1	Flow	CHAMBER SOLUTION Temp #2	Press #12	SEAL OIL P (psig)
1200	1		415	15	17	256	138	143	6.1	138	160	6.1	228	29	35
1300	1		416	15		254	138	142	6.1	138	160	6.1	229	29	35
1400	1		417	15		257	137	142	6.1	137	160	6.1	229	28.9	35
1500	1		418	15		256	138	143	6.1	138	161	6.1	229	29	35
1600	1		419	15		245	138	143	6.1	138	160	6.1	228	28	35
1700	1		420	15		235	138	143	6.1	138	161	6.1	228	30	35
1800	1		421	15		237	139	143	6.1	139	161	6.1	228	30	35
1900	1		422	15		238	139	143	6.1	139	161	6.1	229	30	35
2000	1		423	15		238	139	143	6.1	139	161	6.1	228	29	35
2100	1		424	15		238	139	143	6.1	138	161	6.1	228	29	35
2200	1		425	15		239	139	143	6.1	138	161	6.1	229	29	35
2300	1		426	15		239	139	143	6.1	139	161	6.1	229	29	35
2400	1		427	15		238	138	143	6.1	138	161	6.1	228	29	35
0100	1		428	15		239	138	143	6.1	138	161	6.1	229	29	35
0200	1		429	15		238	138	143	6.1	138	161	6.1	229	29	35
0300	1		430	15		239	139	144	6.1	139	162	6.1	230	29	35
0400	1		431	15		238	139	143	6.1	139	162	6.1	228	29	35
0500	1		432	15	18	237	139	143	6.1	139	162	6.1	229	29	35
0600	1		433	15		237	139	143	6.1	139	163	6.1	229	29	35
0700	1		434	15		237	138	142	6.1	138	161	6.1	229	29	35
0800	1		435	15		237	138	142	6.1	138	161	6.1	227	29	35
0900	1		436	15		237	139	143	6.1	139	162	6.1	228	31	35

NOTES:

5/2

5/3

QC Form Approval

SHEET ____ OF ____

WYLE LABORATORIES

DATA SHEET

Report No. 57505
Page No. 49

CUSTOMER SOUTHERN CALIFORNIA EDISON
Test Title: MSLB
Specimen 75 HP Submersible
Electric Motor
Part No. M/N 7117636003

Job No. 57505
S/N Type CJL6B
Date 4/3/80

SCE No. 5 7 8 9 10

TIME	Ch. No. 7	8	HRS	MNS	CAPS	Seal #5	T-in #2	T-out #4	Flow	T in #3	T out #1	Flow	Temp #7	Press #12	F (psig)
	MOTOR WINDING TEMPERATURES (F)						SEAL COOLING WATER			MOTOR COOLING WATER			CHAMBER SOLUTION		SEAL OIL
5/3 1000	1		437	15	18	238	139	143	6.1	139	162	6.1	230	30	35
1100	1		438	15		237	139	143	6.1	139	161	6.1	228	28	35
1200	1		439	15		236	138	142	6.1	137	161	6.1	229	29	35
1300	1		440	15		236	137	142	6.1	137	161	6.1	229	30	35
1400	1		441	15		236	138	143	6.1	138	161	6.1	228	29	35
1500	1		442	15		237	138	143	6.1	138	161	6.1	230	30	35
1600	1		443	15		237	139	143	6.1	139	162	6.1	229	30	35
1700	1		444	15		236	139	143	6.1	138	161	6.1	228	29	35
1800	1		445	15		236	139	143	6.1	139	161	6.1	229	30	35
1900	1		446	15		237	139	143	6.1	139	162	6.1	229	30	35
2000	1		447	15		237	139	143	6.1	139	162	6.1	229	30	35
2100	1		448	15		237	138	143	6.1	138	161	6.1	228	29	35
2200	1		449	15		237	139	143	6.1	138	162	6.1	228	29	35
2300	1		450	15		236	138	143	6.1	139	161	6.1	228	29	35
2400	1		451	15		236	138	142	6.1	137	161	6.1	229	29	35
5/4 0100	MOTOR DOWN BECAUSE OFF POWER FAILURE.													29	35
0200	1		451	15		235	138	142	6.1	137	159	6.1	226	30	35
0300	1		452	15		237	138	143	6.1	138	160	6.1	227	30	35
0400	1		453	15		237	137	142	6.1	137	160	6.1	229	30	35
0500	1		454	15	19	237	138	142	6.1	137	160	6.1	228	30	35
0600	1		455	15		237	137	142	6.1	137	160	6.1	229	30	35
0700	1		456	15		237	138	173	6.1	138	161	6.1	228	30	35

NOTES: 24:40 = POWER OUT. (CAR Crash.)
01:45 = POWER BACK ON AFTER 1HR 5M.N'S
02:00 = TANK BACK IN TEMP.

W 814 B

QC Form Approval

SHEET ___ OF ___

WYLE LABORATORIES

DATA SHEET

Report No. 57505
Page No. 50

CUSTOMER: SOUTHERN CALIFORNIA EDISON
Test Title: MSLB
Specimen: 75 HP Submersible Electric Motor
Part No.: M/N 7117636003
Job No.: 57505
S/N: Type CJL6B
Date: 5/4/80

SCE No. 5 7 9 10

TIME	Jabbie 7	8	Hrs 9	Min 10	Day 11	Seal #5	Seal Cooling Water T-in #2	Seal Cooling Water T-out #4	Seal Cooling Water Flow	Motor Cooling Water T-in #3	Motor Cooling Water T-out #1	Motor Cooling Water Flow	Chamber Solution Temp #27	Chamber Solution Press #12	Seal Oil P (psig)
0800	1		457	15	19	237	138	143	6.1	138	160	6.1	229	30	35
0900	1		458	15		238	139	143	6.1	138	161	6.1	228	30	35
1000	1		459	15		238	139	144	6.1	138	161	6.1	230	30	35
1100	1		460	15		238	138	142	6.1	138	161	6.1	229	27	35
1200	1		461	15		237	139	143	6.1	138	160	6.1	229	30	35
1300	1		462	15		237	138	142	6.1	138	160	6.1	228	30	35
1400	1		463	15		239	137	142	6.1	137	160	6.1	227	32	35
1500	1		464	15		256	138	143	6.1	138	160	6.1	229	30	35
1600	1		465	15		256	138	143	6.1	138	161	6.1	228	30	35
1700	1		466	15		255	138	143	6.1	138	161	6.1	229	30	35
1800	1		467	15		252	139	143	6.1	138	161	6.1	228	30	35
1900	1		468	15		250	138	143	6.1	138	161	6.1	227	29	35
2000	1		469	15		250	138	143	6.1	138	161	6.1	227	29	35
2100	1		470	15		249	138	142	6.1	138	161	6.1	228	29	35
2200	1		471	15		249	138	142	6.1	138	161	6.1	228	29	35
2300	1		472	15		248	138	143	6.1	138	161	6.1	226	29	35
2400	1		473	15		249	138	143	6.1	138	161	6.1	228	29	35
0100	1		474	15		246	138	142	6.1	137	161	6.1	227	29	35
0200	1		475	15		247	138	143	6.1	138	161	6.1	229	29	35
0300	1		476	15		246	139	143	6.1	138	161	6.1	228	29	35
0400	1		477	15		244	138	142	6.1	138	161	6.1	229	30	35
0500	1		478	15	20	245	138	142	6.1	138	161	6.1	228	30	35

NOTES:

5/5

W 614 B

5/4 QC Form Approval

SHEET ____ OF ____

WYLE LABORATORIES

DATA SHEET

Report No. 57505

Page No. 51

CUSTOMER SOUTHERN CALIFORNIA EDISON

Test Title: MSLB

Specimen 75 HP Submersible Electric Motor

Part No. M/N 7117636003

Job No. 57505

S/N Type CJL6B

Date 5/5/90

SCE No. 5 7 8 9 10

TIME	MOTOR WINDING TEMPERATURES (F)					SEAL COOLING WATER				MOTOR COOLING WATER				CHAMBER SOLUTION		SEAL OIL
	5 Bag	8	Hrs 9	Min 10	Days 11	Seal #5	T-in #2	T-out #4	Flow	T-in #3	T-out #1	Flow	Temp #7	Press #12	F (psig)
0600	1		479	15	20	246	138	143	6.1	138	161	6.1	229	30	35
0700	1		480	15		246	139	144	6.1	139	162	6.1	229	30	35
0800	1		481	15		245	138	143	6.1	138	161	6.1	230	30	35
0900	1		482	15		242	139	144	6.1	139	161	6.1	228	30	35
1000	1		483	15		243	139	143	6.1	139	162	6.1	229	30	35
1100	1		484	15		242	139	143	6.1	138	161	6.1	230	30	35
1200	1		485	15		238	138	143	6.1	138	161	6.1	228	30	35
1300	1		486	15		238	138	143	6.1	138	161	6.1	228	30	35
1400	1		487	15		239	138	143	6.1	138	161	6.1	228	29	35
1500	1		488	15		240	138	143	6.1	138	161	6.1	228	29	35
1600	1		489	15		240	138	143	6.1	138	160	6.1	227	29	35
1700	1		490	15		241	138	143	6.1	138	161	6.1	229	29	35
1800	1		491	15		239	138	143	6.1	138	161	6.1	227	29	35
1900	1		492	15		240	138	143	6.1	138	161	6.1	227	29	35
2000	1		493	15		246	137	141	6.1	136	161	6.1	229	30	35
2100	1		494	15		240	138	142	6.1	138	161	6.1	227	29	35
2200	1		495	15		249	138	143	6.1	138	161	6.1	228	29	35
2300	1		496	15		249	139	143	6.1	138	161	6.1	228	29	35
2400	1		497	15		252	138	143	6.1	138	161	6.1	228	29	35
0100	1		498	15		250	138	143	6.1	138	161	6.1	227	29	35
0200	1		499	15		251	138	143	6.1	138	161	6.1	228	30	35
0300	1		500	15		250	139	143	6.1	138	161	6.1	227	30	35

NOTES:

W 614 B

QC Form Approval

SHEET ____ OF ____

WYLE LABORATORIES

DATA SHEET

Report No. 57505
Page No. 52

CUSTOMER: SOUTHERN CALIFORNIA EDISON
Test Title: MSLB
Specimen: 75 HP Submersible Electric Motor
Part No. M/N 7117636003
Job No. 57505
S/N Type CJL6B
Date 5/16/90

SCE No. 5 7 8 9 10

TIME	Sbd #	8	Hrs #	MIN #	DAeg #	Seal #5	SEAL COOLING WATER T-in #2	T-out #4	Flow	MOTOR COOLING WATER T-in #3	T-out #1	Flow	CHAMBER SOLUTION Temp #7	Press #12	SEAL OIL P (psig)
0400	1		501	15		250	138	143	6.1	138	161	6.1	228	30	35
0500	1		502	15	21	253	138	143	6.1	138	161	6.1	227	30	35
0600	1		503	15		242	139	143	6.1	138	162	6.1	228	30	35
0700	1		504	15		258	138	143	6.1	138	161	6.1	227	30	35
0800	1		505	15		258	138	143	6.1	138	161	6.1	228	29	35
0900	1		506	15		250	139	143	6.1	139	162	6.1	229	30	35
1000	1		507	15		258	139	143	6.1	139	161	6.1	227	29	35
1100	1		508	15		259	139	143	6.1	139	161	6.1	228	29	35
1200	1		509	15		260	138	143	6.1	138	162	6.1	229	30	35
1300	1		510	15		259	138	143	6.1	138	161	6.1	229	30	35
1400	1		511	15		259	138	143	6.1	138	161	6.1	229	29	35
1500	1		512	15		256	138	143	6.1	138	161	6.1	228	29	35
1600	1		513	15		254	138	143	6.1	138	161	6.1	227	30	35
1700	1		514	15		255	139	143	6.1	138	161	6.1	228	30	35
1800	1		515	15		254	138	143	6.1	138	161	6.1	228	29	35
1900	1		516	15		254	138	143	6.1	138	161	6.1	229	30	35
2000	1		517	15		253	139	143	6.1	138	161	6.1	229	29	35
2100	1		518	15		252	138	143	6.1	138	161	6.1	229	29	35
2200	1		519	15		252	138	142	6.1	138	161	6.1	228	29	35
2300	1		520	15		251	139	143	6.1	138	161	6.1	229	29	35
2400	1		521	15		250	138	143	6.1	138	161	6.1	228	29	35
0100	1		522	15		251	138	143	6.1	138	161	6.1	228	29	35

MOTOR WINDING TEMPERATURES (F)

NOTES:

W 614 B

5/16 QC Form Approval

SHEET 37 OF

WYLE LABORATORIES

DATA SHEET

Report No. 57505
Page No. 53

CUSTOMER SOUTHERN CALIFORNIA EDISON
Test Title: MSLB
Specimen 75 HP Submersible Electric Motor
Part No. M/N 7117636003
Job No. 57505
S/N Type CJL6B
Date 5/7/90

SCE No. 5 7 8 9 10

TIME	MOTOR WINDING TEMPERATURES (F) Sub No. 7	8	HRS 5	MIN 10	DAYS 11	SEAL COOLING WATER Seal #5	T-in #2	T-out #4	Flow	MOTOR COOLING WATER T-in #3	T-out #1	Flow	CHAMBER SOLUTION Temp #7	Press #12	SEAL OIL P (psig)
0200	1		523	15		250	138	143	6.1	138	161	6.1	228	29	35
0300	1		524	15		250	139	143	6.1	138	161	6.1	228	29	35
0400	1		525	15		250	138	143	6.1	138	161	6.1	228	29	35
0500	1		526	15	22	250	138	143	6.1	138	161	6.1	229	29	35
0600	1		527	15		249	138	143	6.1	138	163	6.1	229	29	35
0700	1		528	15		250	138	143	6.1	138	163	6.1	229	29	35
0800	1		529	15		249	138	142	6.1	138	163	6.1	229	29	35
0900	1		530	15		248	139	143	6.1	138	160	6.1	228	29	35
1000	1		531	15		249	139	143	6.1	138	160	6.1	229	30	35
1100	1		532	15		249	139	143	6.1	138	161	6.1	229	30	35
1200	1		533	15		246	139	143	6.1	138	160	6.1	227	29	35
1300	1		534	15		247	139	143	6.1	138	160	6.1	229	29	35
1400	1		535	15		246	138	143	6.1	138	160	6.1	228	29	35
1500	1		536	15		246	138	143	6.1	138	160	6.1	229	30	35
1600	1		537	15		244	138	143	6.1	138	160	6.1	228	30	35
1700	1		538	15		246	138	142	6.1	138	160	6.1	229	29	35
1800	1		539	15		246	138	142	6.1	137	160	6.1	227	29	35
1900	1		540	15		247	138	143	6.1	138	160	6.1	229	30	35
2000	1		541	15		245	138	143	6.1	138	161	6.1	228	29	35
2100	1		542	15		245	138	142	6.1	137	161	6.1	228	29	35
2200	1		543	15		245	138	143	6.1	138	161	6.1	228	29	35
2300	1		544	15		245	138	142	6.1	138	162	6.1	229	29	35

NOTES:

5/7 QC Form Approval

SHEET ____ OF ____

WYLE LABORATORIES

DATA SHEET

Report No. 57505

Page No. 54

CUSTOMER SOUTHERN CALIFORNIA EDISON

Test Title: MSLB

Specimen 75 HP Submersible

Electric Motor

Part No. M/N 7117636003

Job No. 57505

S/N Type CJL6B

Date 5/5/80

SCE No. 5 7 8 9 10

	MOTOR WINDING TEMPERATURES (F)					SEAL COOLING WATER				MOTOR COOLING WATER			CHAMBER SOLUTION		SEAL OIL
TIME	Sub No. 1	8	Hrs 9	Min 10	Days 11	Seal #5	T-in #2	T-out #4	Flow	T-in #3	T-out #1	Flow	Temp #6,7	Press #12	P (psig)
2400	1		545	15	22	244	138	143	6.1	138	162	6.1	227	29	35
0100	1		546	15		250	138	143	6.1	138	162	6.1	228	29	35
0200	1		547	15		252	138	143	6.1	138	162	6.1	229	29	35
0300	1		548	15		250	138	143	6.1	137	162	6.1	227	29	35
0400	1		549	15		250	137	141	6.1	137	162	6.1	228	29	35
0500	1		550	15	23	253	138	143	6.1	138	163	6.1	229	29	35
0600	1		551	15		256	138	143	6.1	138	163	6.1	229	29	35
0700	1		552	15		249	138	140	6.1	138	162	6.1	228	29	35
0800	1		553	15		258	138	142	6.1	138	163	6.1	229	29	35
0900	1		554	15		257	138	143	6.1	138	163	6.1	228	29	35
1000	1		555	15		258	138	143	6.1	138	163	6.1	227	29	35
1100	1		556	15		258	139	143	6.1	138	163	6.1	230	30	35
1200	1		557	15		259	139	143	6.1	139	163	6.1	230	30	35
1300	1		558	15		259	139	143	6.1	139	163	6.1	229	30	35
1400	1		559	15		259	138	143	6.1	138	161	6.1	229	29	35
1500	1		560	15		259	138	143	6.1	139	161	6.1	230	30	35
1600	1		561	15		258	138	143	6.1	138	161	6.1	229	30	35
1700	1		562	15		258	139	143	6.1	138	161	6.1	229	30	35
1800	1		563	15		257	138	143	6.1	138	161	6.1	228	29	35
1900	1		564	15		230	139	143	6.1	138	161	6.1	230	30	35
2000	1		565	15		260	138	143	6.1	138	160	6.1	229	29	35
2100	1		566	15		260	138	142	6.1	137	161	6.1	229	29	35

NOTES:

5/8 QC Form Approval

SHEET ____ OF ____

WYLE LABORATORIES

DATA SHEET

CUSTOMER SOUTHERN CALIFORNIA EDISON
Test Title: MSLB
Specimen 75 HP Submersible
Electric Motor
Part No. M/N 7117636003

Job No. 57505
S/N Type CJL6B
Date 5/8/80

SCE No. 5 7 8 9 10

TIME	MOTOR WINDING TEMPERATURES (F) Sub No. 7	8	HRS	MIN	DAY	SEAL COOLING WATER Seal #5	T-in #2	T-out #4	Flow	MOTOR COOLING WATER T-in #3	T-out #1	Flow	CHAMBER SOLUTION Temp #7	Press #12	SEAL OIL P (psig)
2200	1		567	15	23	259	138	142	6.1	138	161	6.1	229	29	35
2300	1		568	15		259	138	142	6.1	138	161	6.1	230	29	35
2400	1		569	15		258	138	143	6.1	138	161	6.1	229	29	35
0100	1		570	15		259	139	143	6.1	139	161	6.1	229	29	35
0200	1		571	15		257	138	143	6.1	138	161	6.1	229	30	35
0300	1		572	15		256	137	142	6.1	137	160	6.1	229	30	35
0400	1		573	15		255	138	143	6.1	138	161	6.1	228	30	35
0500	1		574	15	24	255	138	143	6.1	138	161	6.1	229	29	35
0600	1		575	15		255	138	143	6.1	137	161	6.1	229	29	35
0700	1		576	15		254	138	143	6.1	138	161	6.1	229	29	35
0800	1		577	15		254	138	143	6.1	138	161	6.1	229	29	35
0900	1		578	15		255	139	144	6.1	138	161	6.1	229	30	35
1000	1		579	15		255	138	143	6.1	138	161	6.1	230	30	35
1100	1		580	15		254	138	143	6.1	138	161	6.1	229	29	35
1200	1		581	15		253	138	143	6.1	138	161	6.1	228	29	35
1300	1		582	15		254	138	143	6.1	138	161	6.1	229	29	35
1400	1		583	15		254	138	143	6.1	138	161	6.1	229	29	35
1500	1		584	15		254	139	143	6.1	138	161	6.1	229	29	35
1600	1		585	15		254	138	143	6.1	138	161	6.1	230	29	35
1700	1		586	15		251	138	143	6.1	138	161	6.1	228	28	35
1800	1		587	15		252	138	142	6.1	137	160	6.1	227	30	35
1900	1		588	15		252	138	142	6.1	138	160	6.1	228	30	35

NOTES:

5/8 QC Form Approval 5/9

SHEET ____ OF ____

WYLE LABORATORIES

DATA SHEET

Report No. 57505

Page No. 56

CUSTOMER SOUTHERN CALIFORNIA EDISON

Test Title: MSLB 57505

Specimen 75 HP Submersible Job No.

Electric Motor S/N Type CJL6B

Part No. M/N 7117636003 Date 5/9/80

SCE No. 5 7 8 9 10

TIME	MOTOR WINDING TEMPERATURES (F) No. 7	No. 8	HRS ~~20~~	MWS ~~10~~	DAYS ~~11~~	SEAL COOLING WATER Seal #5	T-in #2	T-out #4	Flow	MOTOR COOLING WATER T-in #3	T-out #1	Flow	CHAMBER SOLUTION Temp ~~#9~~ 7	Press #12	SEAL OIL P (psig)
2000	1		589	15	24	253	138	143	6.1	138	161	61	229	30	35
2100	1		590	15		251	138	142	6.1	137	160	6.1	228	29	35
2200	1		591	15		251	138	142	6.1	138	161	6.1	228	29	35
2300	1		592	15		250	138	142	6.1	137	160	6.1	227	29	35
2400	1		593	15		249	139	143	6.1	138	161	6.1	227	29	35
0100	1		594	15		250	139	143	6.1	138	161	6.1	227	29	35
0200	1		595	15		250	139	143	6.1	138	161	6.1	228	29	35
0300	1		596	15		250	139	144	6.1	139	161	6.1	229	29	35
0400	1		597	15		249	139	143	6.1	138	161	6.1	228	29	35
0500	1		598	15	25	249	139	143	6.1	138	163	6.1	227	29	35
0600	1		599	15		248	139	143	6.1	138	163	6.1	227	29	35
0200	1		600	15		247	139	143	6.1	138	161	6.1	227	29	35
0800	1		601	15		246	139	143	6.1	139	162	6.1	227	29	35
0900	1		602	15		246	138	143	6.1	138	162	6.1	227	29	35
1060	1		603	15		246	139	143	6.1	138	162	6.1	227	29	35
1100	1		604	15		247	139	143	6.1	139	166	6.1	228	29	35
1200	1		605	15		248	139	144	6.1	139	162	6.1	229	30	35
1300	1		606	15		249	~~139~~ 138	143	6.1	139	162	6.1	228	30	35
1400	1		607	15		246	139	144	6.1	139	161	6.1	227	30	35
1500	1		608	15		245	139	143	6.1	138	161	61	227	30	35
1600	1		609	15		244	138	142	6.1	138	161	61	227	29	35
1700	1		610	15		244	138	143	6.1	138	161	6.1	226	30	35

NOTES:

5/9 QC Form Approved 5/10

SHEET ____ OF ____

WYLE LABORATORIES

DATA SHEET

Report No. 57505

Page No. 57

CUSTOMER SOUTHERN CALIFORNIA EDISON

Test Title: MSLB

Specimen 75 HP Submersible Electric Motor

Part No. M/N 7117636003

Job No. 57505

S/N Type CJL6B

Date 5/10/80

SCE No. 5 7 8 9 10

TIME	JOB No.	MOTOR WINDING TEMPERATURES (F) 8	HRS	MINS	DAYS	SEAL COOLING WATER Seal #5	T-in #2	T-out #4	Flow	MOTOR COOLING WATER T-in #3	T-out #1	Flow	CHAMBER SOLUTION Temp #9	Press #12	SEAL OIL P (psig)
1800			611	15	25	245	139	143	6.1	139	161	6.1	227	30	35
1900			612	15		245	138	143	6.1	138	161	6.1	227	30	35
2000			613	15		247	139	144	6.1	139	162	6.1	228	30	35
2100			614	15		246	138	143	6.1	138	161	6.1	227	29	35
2200			615	15		246	138	143	6.1	138	161	6.1	228	29	35
2300			616	15		246	138	143	6.1	138	161	6.1	228	29	35
0000			617	15		247	139	144	6.1	139	162	6.1	228	29	35
0100			618	15		242	135	138	6.1	135	157	6.1	228	29	35
0200			619	15		247	139	143	6.1	135	162	6.1	228	29	35
0300			620	15		246	139	143	6.1	138	162	6.1	228	29	35
0400			621	15		247	139	143	6.1	139	163	6.1	228	29	35
0500			622	15	26	246	139	144	6.1	138	163	6.1	228	29	35
0600			623	15		247	139	144	6.1	139	163	6.1	228	29	35
0700			624	15		246	139	143	6.1	138	161	6.1	228	29	35
0800			625	15		245	139	143	6.1	138	162	6.1	228	29	35
0900			626	15		245	139	144	6.1	139	162	6.1	228	30	35
1000			627	15		246	139	144	6.1	139	163	6.1	229	30	35
1100			628	15		247	139	144	6.1	139	162	6.1	228	30	35
1200			629	15		246	138	143	6.1	136	162	6.1	226	30	35
1300			630	15		245	138	143	6.1	138	161	6.1	229	29	35
1400			631	15		245	138	142	6.1	137	161	6.1	228	29	35
1500			632	15		246	136	144	6.1	139	161	6.1	229	31	35

NOTES:

W 614 B

QC Form Approval 5/11

SHEET ____ OF ____

WYLE LABORATORIES

DATA SHEET

Report No. 57505

Page No. 58

CUSTOMER SOUTHERN CALIFORNIA EDISON

Test Title: MSLB 57505

Specimen 75 HP Submersible Job No. Type CJL6B

Electric Motor S/N

Part No. M/N 7117636003 Date 5/11/80

SCE No. 5 7 8 9 10

	MOTOR WINDING TEMPERATURES (F)					SEAL COOLING WATER				MOTOR COOLING WATER			CHAMBER SOLUTION		SEAL OIL
TIME	Det No. 6	8	HRS 12	MNS 30	DAYS 11	Seal #5	T-in #2	T-out #4	Flow	T-in #3	T-out #1	Flow	Temp #7	Press #12	P (psig)
1600	1		633	15	26	246	139	143	61	138	162	6.1	229	30	35
1700	1		634	15		245	139	143	6.1	138	162	6.1	227	30	35
1800	1		635	15		247	139	143	6.1	138	161	6.1	227	30	35
1900	1		636	15		245	139	143	6.1	139	161	6.1	227	29	35
2000	1		637	15		245	138	143	6.1	137	161	6.1	227	29	35
2100	1		638	15		247	139	143	6.1	139	162	6.1	229	30	35
2200	1		639	15		252	145	148	6.1	140	165	6.1	229	29	35
2300	1		640	15		246	138	142	6.1	138	161	6.1	229	29	35
2400	1		641	15		246	138	142	6.1	137	161	6.1	229	29	35
5/12 0100	1		642	15		245	137	141	6.1	137	161	6.1	229	29	35
0200	1		643	15		246	138	142	6.1	138	161	6.1	228	29	35
0300	1		644	15		246	137	142	6.1	137	161	6.1	229	29	35
0400	1		645	15		245	137	142	6.1	137	160	6.1	228	29	35
0500	1		646	15	27	245	137	142	6.1	137	160	6.1	228	29	35
0600	1		647	15		246	137	142	6.1	137	161	6.1	228	29	35
0700	1		648	15		245	137	142	6.1	137	161	6.1	228	30	35
0800	1		649	15		245	137	142	6.1	137	161	6.1	228	30	35
0900	1		650	15		246	138	142	6.1	137	161	6.1	228	30	35
1000	1		651	15		245	138	142	6.1	138	161	6.1	228	30	35
1100	1		652	15		245	138	143	6.1	138	161	6.1	228	30	35
1200	1		653	15		246	138	142	6.1	138	161	6.1	228	29	35
1300	1		654	15		245	138	143	6.1	138	161	6.1	228	29	35

NOTES:

5/11 QC Form Approval

SHEET ____ OF ____

WYLE LABORATORIES

DATA SHEET

Report No. 57505
Page No. 59

CUSTOMER SOUTHERN CALIFORNIA EDISON
Test Title: MSLB
Specimen 75 HP Submersible
Electric Motor
Part No. M/N 7117636003

Job No. 57505
S/N Type CJL6B
Date 5/12/80

SCE No. 5 7 8 9 10

	MOTOR WINDING TEMPERATURES (F)						SEAL COOLING WATER			MOTOR COOLING WATER			CHAMBER SOLUTION		SEAL OIL
TIME	JeBOX No. ~~7~~	8	HRS ~~9~~	MINS ~~10~~	DAU ~~11~~	Seal #5	T-in #2	T-out #4	Flow	T-in #3	T-out #1	Flow	Temp #9	Press #12	P (psig)
5/12 1400	1		655	15	27	246	138	143	6.1	138	162	6.1	230	30	35
1500	1		656	15		245	138	142	6.1	138	161	6.1	228	29	35
1600	1		657	15		244	138	142	6.1	137	161	6.1	228	29	35
1700	1		658	15		244	138	142	6.1	137	161	6.1	228	28	35
1800	1		659	15		244	138	142	6.1	137	161	6.1	228	30	35
1900	1		660	15		245	138	143	6.1	138	161	6.1	228	30	35
2000	1		661	15		246	138	142	6.1	138	161	6.1	228	30	35
2100	1		662	15		245	138	142	6.1	137	161	6.1	228	30	35
2200	1		663	15		245	137	142	6.1	137	161	6.1	227	29	35
2300	1		664	15		244	138	143	6.1	138	161	6.1	227	29	35
2400	1		665	15		244	138	142	6.1	137	161	6.1	227	29	35
5/13 0100	1		666	15		242	138	142	6.1	137	161	6.1	228	29	35
0200	1		667	15		263	166	172	6.1	166	182	6.1	228	29	35
0300	1		668	15		242	138	142	6.1	138	161	6.1	228	29	35
0400	1		669	15		242	138	142	6.1	137	161	6.1	228	29	35
0500	1		670	15	28	242	138	143	6.1	138	161	6.1	226	29	35
0600	1		671	15		242	138	143	6.1	138	161	6.1	226	29	35
0700	1		672	15		242	138	142	6.1	138	161	6.1	226	29	35
0800	-	-	-	-	-	-	-	-	-	-	-	-	-	-	-

NOTES: 1:45 RELAY SWITCH STOP WORKING ON COOLING WATER FOR MOTOR. 02:30 RELAY SWITCH WORKING AGAIN.
07:00 TEST COMPLETED AFTER 12 HOUR OVER RUN.

QC Form Approval

SHEET ____ OF ____

WYLE LABORATORIES

DATA SHEET

Report No. 57505
Page No. 60

CUSTOMER: SOUTHERN CALIFORNIA EDISON
Test Title: MSLB
Specimen: 75 HP Submersible Electric Motor
Part No.: M/N 7117636003
Job No.: 57505
S/N: Type C/L5B
Date: 4-3-4-80

TIME	MOTOR DATA - ELECTRICAL Amps Leg 1	Amps Leg 2	Amps Leg 3	Line Volts.	Power #13.64 in (kw)	MECHANICAL Oil Level	Vibration
1120	79	80	79	460	43	0.1	
1430	79	79	79	460	43	0.6	
1530	76	78	76	475	43	0.9	
1700	MOTOR OFF					1.0	
1800	MOTOR OFF					1.2	
1900	MOTOR OFF					1.3	
1930	MOTOR OFF					1.4	
2030	MOTOR OFF					1.4	
2045	80	80	80	460	* 26	1.4	
2100	82	82	82	460	56	1.4	
2200	82	82	82	475	56	1.4	
2300	82	82	82	475	55	1.5	
2400	81	81	81	475	56	1.6	
4/4 0100	81	81	81	475	54	1.7	START 131 HR
0200	81	81	81	475	54	1.8	
0300	81	81	81	475	54	1.9	
0400	81	81	81	475	54	2.0	
0500	81	81	81	475	54	2.1	
0600	81	81	81	475	54	2.2	
0700	79	79	79	475	53	2.3	
0740	MOTOR OFF			KW POWER FAILURE			

NOTES: MULTIPLY THE KW READING BY "20" TO GET CORRECT READING (2045 ONLY) FOR ABOVE
1120, 1430, 1530, READING OF 43 IS METER AIRE
0740 KW POWER FAILURE TO MOTOR.
OIL LEVEL = LEVEL IN 2½" I.D. CYLINDER. ⇒ .021 gal/in.

W 614 B

QC Form Approval

SHEET ____ OF ____

WYLE LABORATORIES

DATA SHEET

Report No. 57505

Page No. 61

CUSTOMER SOUTHERN CALIFORNIA EDISON

Test Title: MSLB

Specimen 75 HP Submersible Electric Motor

Part No. M/N 7117636003

Job No. 57505

S/N Type CJL5B

Date 4/9/80

	MOTOR DATA - ELECTRICAL					MECHANICAL	
TIME	Amps Leg 1	Amps Leg 2	Amps Leg 3	Line Volts	Power in (kw)	Oil Level	Vibration
1990	82	82	82	460	53	.2	OK
1500	82	82	82	460	53	.2	OK
1600	82	82	82	460	53	.3	OK
1700	80	80	80	460	52	.5	OK
1800	80	80	80	460	52	.7	OK
1900	80	80	80	460	52	.9	OK
2000	80	80	80	460	52	1.0	OK
2100	80	80	80	460	52	1.3	OK
2200	81	81	81	460	52	1.3	OK
2300	81	81	81	460	52	1.5	OK
2400	81	81	81	460	52	1.6	OK
4/10 0100	81	81	81	460	52	1.7	OK
0200	80	80	80	460	52	1.8	OK
0300	80	80	80	460	52	2.0	OK . 11"/hr
0400	80	80	80	460	52	2.1	OK
0500	81	81	81	460	52	2.2	OK
0600	81	81	81	460	52	2.3	OK
0700	81	81	81	460	52	2.4	OK
0800	81	81	81	460	52	2.5	OK
0900	80	80	80	465	52	2.5	OK
1000	80	80	80	465	52	2.6	OK
1100	80	80	80	465	52	2.7	OK
1200	80	80	80	465	52	2.8	OK
1300	80	80	80	465	52	2.9	OK

NOTES: ADD 2.3" TO OIL LEVEL FOR TOTAL LOSS FROM 4/3/80 TO 4/4/80 TEST PERIOD

W 614 B

QC Form Approval

SHEET ____ OF ____

WYLE LABORATORIES

DATA SHEET

Report No. 57505
Page No. 62

CUSTOMER SOUTHERN CALIFORNIA EDISON
Test Title: MSLB
Specimen 75 HP Submersible Electric Motor
Part No. M/N 7117636003
Job No. 57505
S/N Type CJL B
Date 4/10/90

TIME	MOTOR DATA - ELECTRICAL: Amps Leg 1	Amps Leg 2	Amps Leg 3	Line Volts	Power in (kw)	MECHANICAL: Oil Level	Vibration
1400	80	80	80	465	52	3.0	OK
1500	80	80	80	465	52	3.1	OK
1600	80	80	80	465	52	3.2	OK
1700	80	80	80	465	52	3.3	OK
1800	80	80	80	465	52	3.4	OK
1900	80	80	80	465	52	3.5	OK
2000	80	80	80	465	52	3.6	OK
2100	80	80	80	465	52	3.7	OK
2200	80	80	80	465	52	3.8	OK
2300	80	80	80	465	52	3.9	OK
2400	80	80	80	465	52	4.0	OK
4/11 0100	80	80	80	465	52	4.1	OK
0200	80	80	80	465	52	4.2	OK
0300	80	80	80	465	52	4.3	OK
0400	80	80	80	465	52	4.4	OK
0500	80	80	80	465	52	4.5	OK
0600	80	80	80	465	52	4.6	OK
0700	80	80	80	465	52	4.7	OK
0800	80	80	80	465	52	4.8	OK
0900	80	80	80	465	52	4.8	OK
1000	80	80	80	465	52	0.2	OK
1100	80	80	80	465	52	.1	OK
1200	80	80	80	465	52	.2	OK
1300	80	80	80	465	52	.3	OK

NOTES: REFILLED OIL AT 0910 ADD 4.8" TO [illegible] OIL LOSS
+ 2.3" FROM PREVIOUS RUN
7.1 TOTAL

W 614 B

QC Form Approval

SHEET ____ OF ____

WYLE LABORATORIES

DATA SHEET

Report No. 57505
Page No. 63

CUSTOMER: SOUTHERN CALIFORNIA EDISON
Test Title: MSLB
Specimen: 75 HP Submersible Electric Motor
Part No.: M/N 7117636003
Job No.: 57505
S/N: Type C.I. B
Date: 4/11/80

TIME	MOTOR DATA + ELECTRICAL: Amps Leg 1	Amps Leg 2	Amps Leg 3	Line Volts	Power in (kw)	MECHANICAL: Oil Level	Vibration
4-11 1400	80	80	80	465	52	.3	OK
1500	80	80	80	465	52	.4	OK
1600	80	80	80	465	52	.5	
1700	80	80	80	465	52	.6	
1800	80	80	80	465	52	.7	
1900	80	80	80	465	52	.8	
2000	80	80	80	465	52	.9	
2100	80	80	80	465	52	.9	
2200	80	80	80	465	52	1.1	
2300	80	80	80	465	52	1.2	
2400	80	80	80	465	52	1.3	
4/12 0100	80	80	80	465	52	1.4	
0200	80	80	80	465	52	1.5	
0300	80	80	80	465	52	1.6	
0400	80	80	80	465	52	1.7	
0500	80	80	80	465	52	1.8	
0600	80	80	80	465	52	1.9	
0700	80	80	80	465	52	2.0	
0800	80	80	80	465	52	2.0	
0900	80	80	80	465	52	2.1	
1000	80	80	80	465	52	2.2	
1100	80	80	80	465	52	2.3	
1200	80	80	80	465	52	2.4	
1300	80	80	80	465	52	2.5	

NOTES:

W 6148

QC Form Approval

SHEET ____ OF ____

WYLE LABORATORIES

DATA SHEET

Report No. 57505
Page No. 64

CUSTOMER SOUTHERN CALIFORNIA EDISON
Test Title: MSLB
Specimen 75 HP Submersible Electric Motor
Part No. M/N 7117636003
Job No. 57505
S/N Type CJL-B
Date 4/12/80

TIME	MOTOR DATA + ELECTRICAL: Amps Leg 1	Amps Leg 2	Amps Leg 3	Line Volts	Power in (kw)	MECHANICAL: Oil Level	Vibration
4-12 1400	80	80	80	465	52	2.6	
1500	80	80	80	465	52	2.7	
1600	80	80	80	465	52	2.8	
1700	80	80	80	465	52	3.0	
1800	80	80	80	465	52	3.1	
1900	80	80	80	465	52	3.3	
2000	Motor off			~~465~~		3.3	
~~2100~~	82	82	82	465	56	3.4	
2200	82	82	82	465	52	3.4	
2300	81	81	81	465	52	3.5	
2400	81	81	81	465	52	3.5	
4/13 0100	81	81	81	465	52	3.6	
0200	80	80	80	465	52	3.6	
0300	80	80	80	465	52	3.7	
0400	80	80	80	465	52	3.7	
0500	80	80	80	465	52	3.8	
0600	80	80	80	465	52	3.8	
0700	80	80	80	465	52	3.9	
0800	80	80	80	465	52	4.0	
0900	80	80	80	465	52	4.1	
1000	80	80	80	465	52	4.1	
1100	80	80	80	465	52	4.2	
1200	80	80	80	465	52	4.2	
1300	80	80	80	465	52	4.3	

NOTES:

W 814 B

QC Form Approval

SHEET ____ OF ____

WYLE LABORATORIES

DATA SHEET

Report No. 57505
Page No. 65

CUSTOMER: SOUTHERN CALIFORNIA EDISON
Test Title: MSLB
Specimen: 75 HP Submersible Electric Motor
Part No.: M/N 7117636003
Job No.: 57505
S/N: Type CJL B
Date: 4/13/90

	MOTOR DATA			ELECTRICAL			MECHANICAL	
TIME	Amps Leg 1	Amps Leg 2	Amps Leg 3	Line Volts	Power in (kw)	Oil Level	Vibration	
4/13 1400	80	80	80	465	52	4.3		
1500	80	80	80	465	52	4.4		
1600	80	80	80	465	52	4.5		
1700	80	80	80	465	52	4.6		
1800	80	80	80	465	52	4.6		
1900	80	80	80	465	52	4.7		
2000	80	80	80	465	52	4.8		
2100	80	80	80	465	52	4.9		
2200	80	80	80	465	52	4.9		
2300	80	80	80	465	52	5.0		
2400	80	80	80	465	52	5.1		
4/14 0100	80	80	80	465	52	5.1		
0200	80	80	80	465	52	5.2		
0300	80	80	80	465	52	5.3		
0400	80	80	80	465	52	5.3		
0500	80	80	80	465	52	5.4		
0600	80	80	80	465	52	5.4		
0700	80	80	80	465	52	0	FILLED OIL RES.	
0800	80	80	80	465	52	0		
0900	80	80	80	465	52	.1		
1000	80	80	80	465	52	.2		
1100	80	80	80	465	52	.2		
1200	80	80	80	465	52	.2		
1300	80	80	80	465	52	.2		

NOTES: 0200 FILLED OIL RES. 5.4" ADD TO TOTAL.

W 614 B

QC Form Approval

SHEET ____ OF ____

WYLE LABORATORIES

DATA SHEET

Report No. 57505
Page No. 66

CUSTOMER SOUTHERN CALIFORNIA EDISON
Test Title: MSLB
Specimen 75 HP Submersible Electric Motor
Part No. M/N 7117636003
Job No. 57505
S/N Type C[illegible]B
Date 4/14/80

	MOTOR DATA - ELECTRICAL						- MECHANICAL
TIME	Amps Leg 1	Amps Leg 2	Amps Leg 3	Line Volts	Power in (kw)	Oil Level	Vibration
4/14 1400	80	80	80	465	52	.3	
1500	80	80	80	465	52	.4	
1600	80	80	80	465	52	.5	
1700	80	80	80	465	52	.5	
1800	80	80	80	465	52	.7	
1900	80	80	80	465	52	.7	
2000	80	80	80	465	52	.8	
2100	80	80	80	465	52	.8	
2200	80	80	80	465	52	.9	
2300	80	80	80	465	52	1.0	
2400	80	80	80	465	52	1.1	
4/15 0100	80	80	80	465	52	1.1	
0200	80	80	80	465	52	1.2	
0300	80	80	80	465	52	1.2	
0400	80	80	80	465	52	1.2	
0500	80	80	80	465	52	1.3	
0600	80	80	80	465	52	1.3	
0700	80	80	80	465	52	1.3	
0800	80	80	80	465	52	1.4	
0900	80	80	80	465	52	1.4	
1000	80	80	80	465	52	1.4	
1100	80	80	80	465	52	1.4	
1200	80	80	80	465	52	1.4	
1300	80	80	80	465	52	1.4	

NOTES:

W 614 B

QC Form Approval

SHEET ____ OF ____

WYLE LABORATORIES

DATA SHEET

Report No. 57505
Page No. 67

CUSTOMER: SOUTHERN CALIFORNIA EDISON
Test Title: MSLB
Specimen: 75 HP Submersible Electric Motor
Part No.: M/N 7117636003
Job No.: 57505
S/N: Type CJL B
Date: 4/15/80

TIME	MOTOR DATA - ELECTRICAL Amps Leg 1	Amps Leg 2	Amps Leg 3	Line Volts	Power in (kw)	MECHANICAL Oil Level	Vibration
1400	80	80	80	465	52	1.5	
1500	80	80	80	465	52	1.5	
1600	80	80	80	465	52	1.6	
1700	80	80	80	465	52	1.6	
1800	80	80	80	465	52	1.7	
1900	80	80	80	465	52	1.7	
2000	80	80	80	465	52	1.7	
2100	80	80	80	465	52	1.8	
2200	80	80	80	465	52	1.8	
2300	80	80	80	465	52	1.8	
2400	80	80	80	465	52	1.9	
0100	80	80	80	465	52	1.9	
0200	80	80	80	465	52	1.9	
0300	80	80	80	465	52	1.9	
0400	80	80	80	465	52	2.0	
0500	80	80	80	465	52	2.0	
0600	80	80	80	465	52	2.0	
0700	80	80	80	465	52	2.0	
0800	80	80	80	465	52	2.0	
0900	80	80	80	465	52	2.0	
1000	80	80	80	465	52	2.0	
1100	80	80	80	465	52	2.0	
1200	80	80	80	465	52	2.0	
1300	80	80	80	465	52	2.1	

NOTES:

-15

4/16

W 814 B

QC Form Approval

SHEET ____ OF ____

WYLE LABORATORIES

DATA SHEET

Report No. 57505
Page No. 68

CUSTOMER: SOUTHERN CALIFORNIA EDISON
Test Title: MSLB
Specimen: 75 HP Submersible Electric Motor
Part No.: M/N 7117636003
Job No.: 57505
S/N: Type CJL B
Date: 4/16/80

	MOTOR DATA + ELECTRICAL					MECHANICAL	
TIME	Amps Leg 1	Amps Leg 2	Amps Leg 3	Line Volts	Power in (kw)	Oil Level	Vibration
4/16 1400	80	80	80	465	52	2.1	
1500	80	80	80	465	52	2.1	
1600	80	80	80	465	52	2.2	
1700	80	80	80	465	52	2.2	
1800	80	80	80	465	52	2.2	
1900	80	80	80	465	52	2.3	
2000	80	80	80	465	52	2.3	
2100	80	80	80	465	52	2.3	
2200	80	80	80	465	52	2.4	
2300	80	80	80	465	52	2.4	
2400	80	80	80	465	52	2.4	
4/17 0100	80	80	80	465	52	2.5	
0200	80	80	80	465	52	2.5	
0300	80	80	80	465	52	2.5	
0400	80	80	80	465	52	2.5	
0500	80	80	80	465	52	2.6	
0600	80	80	80	465	52	2.6	
0700	80	80	80	465	52	2.6	
0800	80	80	80	465	52	2.6	
0900	80	80	80	465	52	2.6	
1000	80	80	80	465	52	2.6	
1100	80	80	80	465	52	2.6	
1200	80	80	80	465	52	2.6	
1300	80	80	80	465	52	2.6	

NOTES:

W 614 B

QC Form Approval

SHEET ____ OF ____

WYLE LABORATORIES

DATA SHEET

Report No. 57505
Page No. 69

CUSTOMER SOUTHERN CALIFORNIA EDISON
Test Title: MSLB
Specimen 75 HP Submersible Electric Motor
Part No. M/N 7117636003
Job No. 57505
S/N Type C.L.B
Date 4/17/80

	MOTOR DATA + ELECTRICAL						+ MECHANICAL
TIME	Amps Leg 1	Amps Leg 2	Amps Leg 3	Line Volts	Power in (kw)	Oil Level	Vibration
1400	80	80	80	465	52	2.6	
1500	80	80	80	465	52	2.7	
1600	80	80	80	465	52	2.7	
1700	80	80	80	465	52	2.7	
1800	80	80	80	465	52	2.7	
1900	80	80	80	465	52	2.8	
2000	80	80	80	465	52	2.8	
2100	80	80	80	465	52	2.8	
2200	80	80	80	465	52	2.9	
2300	80	80	80	465	52	2.9	
2400	80	80	80	465	52	2.9	
0100	80	80	80	465	52	2.9	
0200	80	80	80	465	52	3.0	
0300	80	80	80	465	52	3.0	
0400	80	80	80	465	52	3.0	
0500	80	80	80	465	52	3.0	
0600	80	80	80	465	52	3.0	
0700	80	80	80	465	52	3.1	
0800	80	80	80	465	52	3.1	
0900	80	80	80	465	52	3.1	
1000	80	80	80	465	52	3.1	
1100	80	80	80	465	52	3.1	
1200	80	80	80	465	52	3.1	
1300	80	80	80	465	52	3.1	

NOTES:

W 616 B

QC Form Approval

SHEET ____ OF ____

WYLE LABORATORIES

DATA SHEET

Report No. 57505
Page No. 70

CUSTOMER: SOUTHERN CALIFORNIA EDISON
Test Title: MSLB
Specimen: 75 HP Submersible Electric Motor
Part No.: M/N 7117636003
Job No.: 57505
S/N: Type CJL B
Date: 4/18/80

TIME	MOTOR DATA - ELECTRICAL					MECHANICAL	
	Amps Leg 1	Amps Leg 2	Amps Leg 3	Line Volts	Power in (kw)	Oil Level	Vibration
4/18 1400	80	80	80	465	52	3.1	
1500	80	80	80	465	52	3.1	
1600	80	80	80	465	52	3.2	
1700	80	80	80	465	52	3.2	
1800	80	80	80	465	52	3.2	
1900	80	80	80	465	52	3.2	
2000	80	80	80	465	52	3.2	
2100	80	80	80	465	52	3.3	
2200	80	80	80	465	52	3.3	
2300	80	80	80	465	52	3.3	
2400	80	80	80	465	52	3.3	
4/19 0100	80	80	80	465	52	3.3	
0200	80	80	80	465	52	3.4	
0300	80	80	80	465	52	3.4	
0400	80	80	80	465	52	3.4	
0500	80	80	80	465	52	3.4	
0600	80	80	80	465	52	3.4	
0700	80	80	80	465	52	3.4	
0800	80	80	80	465	52	3.4	
0900	80	80	80	465	52	3.4	
1000	80	80	80	465	52	3.4	
1100	80	80	80	465	52	3.4	
1200	80	80	80	465	52	3.4	
1300	80	80	80	465	52	3.4	

NOTES:

W 614 B

QC Form Approval

SHEET ... OF

WYLE LABORATORIES

DATA SHEET

Report No. 57505
Page No. 71

CUSTOMER: SOUTHERN CALIFORNIA EDISON
Test Title: MSLB
Specimen: 75 HP Submersible Electric Motor
Part No.: M/N 7117636003
Job No.: 57505
S/N: Type CJL B
Date: 4/19/80

TIME	MOTOR DATA - ELECTRICAL Amps Leg 1	Amps Leg 2	Amps Leg 3	Line Volts	Power in (kw)	MECHANICAL Oil Level	Vibration
1400	80	80	80	465	52	3.4	
1500	80	80	80	465	52	3.5	
1600	80	80	80	465	52	3.5	
1700	80	80	80	465	52	3.5	
1800	80	80	80	465	52	3.5	
1900	80	80	80	465	52	3.6	
2000	80	80	80	465	52	3.6	
2100	80	80	80	465	52	3.6	
2200	80	80	80	465	52	3.7	
2300	80	80	80	465	52	3.7	
2400	80	80	80	465	52	3.7	
0100	80	80	80	465	52	3.7	
0200	80	80	80	465	52	3.8	
0300	80	80	80	465	52	3.8	
0400	80	80	80	465	52	3.8	
0500	80	80	80	465	52	3.9	
0600	80	80	80	465	52	3.9	
0200	80	80	80	465	52	3.9	
0800	80	80	80	465	52	3.9	
0900	80	80	80	465	52	3.9	OK
1000	80	80	80	465	52	3.9	OK
1100	80	80	80	465	52	3.9	OK
1200	80	80	80	465	52	3.9	OK
1300	80	80	80	465	52	3.9	OK

NOTES:

W 6168

QC Form Approval

SHEET ____ OF ____

WYLE LABORATORIES

DATA SHEET

Report No. 57505

Page No. 72

CUSTOMER: SOUTHERN CALIFORNIA EDISON

Test Title: MSLB

Specimen: 75 HP Submersible Electric Motor

Part No.: M/N 7117636003

Job No.: 57505

S/N: Type CJL5B

Date: 4/20/90

	MOTOR DATA - ELECTRICAL					- MECHANICAL	
TIME	Amps Leg 1	Amps Leg 2	Amps Leg 3	Line Volts	Power in (kw)	Oil Level	Vibration
1400	80	80	80	465	52	3.9	OK
1500	80	80	80	465	52	4.0	OK
1600	80	80	80	465	52	4.0	OK
1700	80	80	80	465	52	4.0	OK
1800	80	80	80	465	52	4.0	OK
1900	80	80	80	465	52	4.0	OK
2000	80	80	80	465	52	4.1	OK
2100	80	80	80	465	52	4.1	OK
2200	80	80	80	465	52	4.1	OK
2300	80	80	80	465	52	4.1	OK
2400	80	80	80	465	52	4.1	OK
0100	80	80	80	465	52	4.1	OK
0200	80	80	80	465	52	4.1	OK
0300	80	80	80	465	52	4.2	OK
0400	80	80	80	465	52	4.2	OK
0500	80	80	80	465	52	4.2	OK
0600	80	80	80	465	52	4.2	OK
0700	80	80	80	465	52	4.2	OK
0800	80	80	80	465	52	4.3	OK
0900	80	80	80	465	52	4.3	OK
1000	80	80	80	465	52	4.3	OK
1100	80	80	80	465	52	4.3	OK
1200	80	80	80	465	52	4.3	OK
1300	80	80	80	465	52	4.3	OK

NOTES:

4/21

W 614 B

QC Form Approval

SHEET ____ OF ____

WYLE LABORATORIES

DATA SHEET

Report No. 57505
Page No. 73

CUSTOMER: SOUTHERN CALIFORNIA EDISON
Test Title: MSLB
Specimen: 75 HP Submersible Electric Motor
Part No.: M/N 7117636003
Job No.: 57505
S/N: Type CJL5B
Date: 4/21/90

TIME	MOTOR DATA - ELECTRICAL Amps Leg 1	Amps Leg 2	Amps Leg 3	Line Volts	Power in (kw)	- MECHANICAL Oil Level	Vibration
1400	80	80	80	465	52	4.4	
1500	80	80	80	465	52	4.4	
1600	80	80	80	465	52	4.4	
1700	80	80	80	465	52	4.5	
1800	80	80	80	465	52	4.5	
1900	80	80	80	465	52	4.5	
2000	80	80	80	465	52	4.5	
2100	80	80	80	465	52	4.6	
2200	80	80	80	465	52	4.6	
2300	80	80	80	465	52	4.6	
2400	80	80	80	465	52	4.6	
0100	80	80	80	465	52	4.7	
0200	80	80	80	465	52	4.7	
0300	80	80	80	465	52	4.8	
0400	80	80	80	465	52	4.8	
0500	80	80	80	465	52	4.8	
0600	80	80	80	465	52	4.8	
0700	80	80	80	465	52	4.9	
0800	80	80	80	465	52	4.9	
0900	80	80	80	465	52	4.9	
1000	80	80	80	465	52	5.0	
1100	80	80	80	465	52	5.0	
1200	80	80	80	465	52	5.0	
1300	80	80	80	465	52	5.1	

NOTES:

W 614 B

QC Form Approval

SHEET ____ OF ____

WYLE LABORATORIES

DATA SHEET

Report No. 57505
Page No. 74

CUSTOMER: SOUTHERN CALIFORNIA EDISON
Test Title: MSLB
Specimen: 75 HP Submersible Electric Motor
Part No.: M/N 7117636003
Job No.: 57505
S/N: Type CJL5B
Date: 4/22/80

	MOTOR DATA - ELECTRICAL					- MECHANICAL	
TIME	Amps Leg 1	Amps Leg 2	Amps Leg 3	Line Volts	Power in (kw)	Oil Level	Vibration
4/22 1400	80	80	80	465	52	5.1	OK
1500	80	80	80	465	52	5.2	
1600	80	80	80	465	52	5.2	
1700	80	80	80	465	52	5.2	
1800	80	80	80	465	52	5.3	
1900	80	80	80	465	52	5.3	
2000	80	80	80	465	52	5.4	
2100	80	80	80	465	52	5.4	
2200	80	80	80	465	52	5.4	
2300	80	80	80	465	52	5.4	
2400	80	80	80	465	52	5.4	
4/23 0100	80	80	80	465	52	5.5	
0200	80	80	80	465	52	5.5	
0300	80	80	80	465	52	5.6	
0400	80	80	80	465	52	5.6	
0500	80	80	80	465	52	5.6	
0600	80	80	80	465	52	5.7	
0700	80	80	80	465	52	5.7	
0800	80	80	80	465	52	5.7	
0900	80	80	80	465	52	5.8	
1000	80	80	80	465	52	5.8	
1100	80	80	80	465	52	5.9	
1200	80	80	80	465	52	5.9	
1300	80	80	80	465	52	5.9	OK

NOTES:

W 614 B

QC Form Approval

SHEET ____ OF ____

WYLE LABORATORIES

DATA SHEET

Report No. 57505

Page No. 75

CUSTOMER SOUTHERN CALIFORNIA EDISON

Test Title: MSLB

Specimen 75 HP Submersible Electric Motor

Part No. M/N 7117636003

Job No. 57505

S/N Type CJL5B

Date 4/23/80

TIME	MOTOR DATA - ELECTRICAL					MECHANICAL	
	Amps Leg 1	Amps Leg 2	Amps Leg 3	Line Volts	Power in (kw)	Oil Level	Vibration
1400	80	80	80	465	52	5.9	OK
1900	80	80	80	465	52	6.0	
1400	80	80	80	465	52	6.0	
1700	80	80	80	465	52	6.0	
1800	80	80	80	465	52	6.0	
1900	80	80	80	465	52	6.0	
2000	80	80	80	465	52	6.0	
2100	80	80	80	465	52	6.1	
2200	80	80	80	465	52	6.1	
2300	80	80	80	465	52	6.1	
2400	80	80	80	465	52	6.1	
0100	80	80	80	465	52	6.1	
0200	80	80	80	465	52	6.1	
0300	80	80	80	465	52	6.2	
0400	80	80	80	465	52	6.2	
0500	80	80	80	465	52	6.2	
0600	80	80	80	465	52	6.2	
0700	80	80	80	465	52	6.2	
0800	80	80	80	465	52	5	
0900	80	80	80	465	52	0	
1000	80	80	80	465	52	0	
1100	80	80	80	465	52	0	
1200	80	80	80	465	52	0	
1300	80	80	80	465	52	0	OK

NOTES: ADD EXTRA 6.2" TO TOTAL OIL CONSUMPTION

W 614 B

QC Form Approval

SHEET ____ OF ____

WYLE LABORATORIES

DATA SHEET

Report No. 57505
Page No. 76

CUSTOMER: SOUTHERN CALIFORNIA EDISON
Test Title: MSLB
Specimen: 75 HP Submersible Electric Motor
Part No.: M/N 7117636003
Job No.: 57505
S/N: Type CJL5B
Date: 4/24/80

TIME	MOTOR DATA - ELECTRICAL					- MECHANICAL	
	Amps Leg 1	Amps Leg 2	Amps Leg 3	Line Volts	Power in (kw)	Oil Level	Vibration
1400	80	80	80	465	52	0	OK
1500	80	80	80	465	52	0	
1600	80	80	80	465	52	0	
1700	80	80	80	465	52	0	
1800	80	80	80	465	52	0	
1900	80	80	80	465	52	0	
2000	80	80	80	465	52	0	
2100	80	80	80	465	52	0	
2200	80	80	80	465	52	0	
2300	80	80	80	465	52	0	
2400	80	80	80	465	52	0	
0100	80	80	80	465	52	0	
0200	80	80	80	465	52	0	
0300	80	80	80	465	52	0	
0400	80	80	80	465	52	0	
0500	80	80	80	465	52	0	
0600	80	80	80	465	52	0	
0700	80	80	80	465	52	0	
0800	80	80	80	465	52	0	
0900	80	80	80	465	52	0	
1000	80	80	80	465	52	0	
1100	80	80	80	465	52	0	
1200	80	80	80	465	52	0	
1300	80	80	80	465	52	0	OK

NOTES:

W 614 B

QC Form Approval

SHEET ___ OF ___

WYLE LABORATORIES

DATA SHEET

Report No. 57505
Page No. 77

CUSTOMER: SOUTHERN CALIFORNIA EDISON
Test Title: MSLB
Specimen: 75 HP Submersible Electric Motor
Part No.: M/N 7117636003
Job No.: 57505
S/N: Type CJL5B
Date: 4/25/80

	MOTOR DATA - ELECTRICAL					- MECHANICAL	
TIME	Amps Leg 1	Amps Leg 2	Amps Leg 3	Line Volts	Power in (kw)	Oil Level	Vibration
1400	80	80	80	465	52	0	OK
1500	80	80	80	465	52	0	
1600	80	80	80	465	52	0	
1700	80	80	80	465	52	0	
1800	80	80	80	465	52	0	
1900	80	80	80	465	52	0	
2000	80	80	80	465	52	0	
2100	80	80	80	465	52	0	
2200	80	80	80	465	52	0	
2300	80	80	80	465	52	0	
2400	80	80	80	465	52	0	
0100	80	80	80	465	52	0	
0200	80	80	80	465	52	0	
0300	80	80	80	465	52	0	
0400	80	80	80	465	52	0	
0500	80	80	80	465	52	0	
0600	80	80	80	465	52	0	
0700	80	80	80	465	52	0	
0800	80	80	80	465	52	0	
0900	80	80	80	465	52	0	
1000	80	80	80	465	52	0	
1100	80	80	80	465	52	0	
1200	80	80	80	465	52	0	
1300	80	80	80	465	52	0	OK

NOTES:

W 614 B

QC Form Approval

SHEET ____ OF ____

WYLE LABORATORIES

DATA SHEET

Report No. 57505
Page No. 78

CUSTOMER: SOUTHERN CALIFORNIA EDISON
Test Title: MSLB
Specimen: 75 HP Submersible Electric Motor
Part No.: M/N 7117636003
Job No.: 57505
S/N: Type CJL-B
Date: 4/26/80

	MOTOR DATA - ELECTRICAL					- MECHANICAL	
TIME	Amps Leg 1	Amps Leg 2	Amps Leg 3	Line Volts	Power in (kw)	Oil Level	Vibration
4/26 1400	80	80	80	465	52	0	OK
1500	80	80	80	465	52	0	
1600	80	80	80	465	52	0	
1700	80	80	80	465	52	.1	
1800	80	80	80	465	52	.1	
1900	80	80	80	465	52	.1	
2000	80	80	80	465	52	.1	
2100	80	80	80	465	52	.1	
2200	80	80	80	465	52	.1	
2300	80	80	80	465	52	.1	
2400	80	80	80	465	52	.1	
4/27 0100	80	80	80	465	52	.1	
0200	80	80	80	465	52	.1	
0300	80	80	80	465	52	.1	
0400	80	80	80	465	52	.1	
0500	80	80	80	465	52	.1	
0600	80	80	80	465	52	.1	
0700	80	80	80	465	52	.1	
0800	80	80	80	465	52	.1	
0900	80	80	80	465	52	.1	
1000	80	80	80	465	52	.1	
1100	80	80	80	465	52	.1	
1200	80	80	80	465	52	.1	
1300	80	80	80	465	52	.1	OK

NOTES:

W 614 B

QC Form Approval

SHEET ____ OF ____

WYLE LABORATORIES

DATA SHEET

Report No. 57505
Page No. 79

CUSTOMER: SOUTHERN CALIFORNIA EDISON
Test Title: MSLB
Specimen: 75 HP Submersible Electric Motor
Part No.: M/N 7117636003
Job No.: 57505
S/N: Type CJL/B
Date: 4/27/80

TIME	MOTOR DATA - ELECTRICAL					- MECHANICAL	
	Amps Leg 1	Amps Leg 2	Amps Leg 3	Line Volts	Power in (kw)	Oil Level	Vibration
(27) 1400	80	80	80	465	52	.1	OK
1500	80	80	80	465	52	.1	
1600	80	80	80	465	52	.1	
1700	80	80	80	465	52	.1	
1800	80	80	80	465	52	.1	
1900	80	80	80	465	52	.1	
2000	80	80	80	465	52	.2	
2100	80	80	80	465	52	.2	
2200	80	80	80	465	52	.2	
2300	80	80	80	465	52	.2	
2400	80	80	80	465	52	.2	
4/28 0100	80	80	80	465	52	.2	
0200	80	80	80	465	52	.2	
0300	80	80	80	465	52	.2	
0400	80	80	80	465	52	.2	
0500	80	80	80	465	52	.2	
0600	80	80	80	465	52	.2	
0700	80	80	80	465	52	.2	
0800	80	80	80	465	52	.2	
0900	80	80	80	465	52	.2	
1000	80	80	80	465	52	.2	
1100	80	80	80	465	52	.2	
1200	80	80	80	465	52	.2	
1300	80	80	80	465	52	.2	OK

NOTES:

W 614 B

QC Form Approval

SHEET ____ OF ____

WYLE LABORATORIES

DATA SHEET

Report No. 57505
Page No. 80

CUSTOMER: SOUTHERN CALIFORNIA EDISON
Test Title: MSLB
Specimen: 75 HP Submersible Electric Motor
Part No.: M/N 7117636003
Job No.: 57505
S/N: Type CJL?E
Date: 4/28/80

TIME	MOTOR DATA - ELECTRICAL					- MECHANICAL	
	Amps Leg 1	Amps Leg 2	Amps Leg 3	Line Volts	Power in (kw)	Oil Level	Vibration
28 1400	80	80	80	465	52	.2	OK
1500	80	80	80	465	52	.2	
1600	80	80	80	465	52	.2	
1700	80	80	80	465	52	.2	
1800	80	80	80	465	52	.2	
1900	80	80	80	465	52	.2	
2000	80	80	80	465	52	.2	
2100	80	80	80	465	52	.2	
2200	80	80	80	465	52	.2	
2300	80	80	80	465	52	.2	
2400	80	80	80	465	52	.2	
29 0100	80	80	80	465	52	.2	
0200	80	80	80	465	52	.2	
0300	80	80	80	465	52	.2	
0400	80	80	80	465	52	.2	
0500	80	80	80	465	52	.2	
0600	80	80	80	465	52	.2	
0700	80	80	80	465	52	.2	
0800	80	80	80	465	52	.2	
0900	80	80	80	465	52	.2	
1000	80	80	80	465	52	.2	
1100	80	80	80	465	52	.2	
1200	80	80	80	465	52	.2	
1300	80	80	80	465	52	.2	

NOTES:

W 614 B

QC Form Approval

SHEET ____ OF ____

WYLE LABORATORIES

DATA SHEET

Report No. 57505
Page No. 81

CUSTOMER SOUTHERN CALIFORNIA EDISON
Test Title: MSLB
Specimen 75 HP Submersible Electric Motor
Part No. M/N 7117636003
Job No. 57505
S/N Type CJL B
Date 4/29/80

	MOTOR DATA - ELECTRICAL					- MECHANICAL	
TIME	Amps Leg 1	Amps Leg 2	Amps Leg 3	Line Volts	Power in (kw)	Oil Level	Vibration
4/29 1400	80	80	80	465	52	.2	OK
1500	80	80	80	465	52	.2	
1600	80	80	80	465	52	.2	
1700	80	80	80	465	52	.2	
1800	80	80	80	465	52	.2	
1900	80	80	80	465	52	.2	
2000	80	80	80	465	52	.2	
2100	80	80	80	465	52	.2	
2200	80	80	80	465	52	.2	
2300	80	80	80	465	52	.2	
2400	80	80	80	465	52	.2	
4/30 0100	80	80	80	465	52	.2	
0200	80	80	80	465	52	.2	
0300	80	80	80	465	52	.2	
0400	80	80	80	465	52	.2	
0500	80	80	80	465	52	.2	
0600	80	80	80	465	52	.2	
0700	80	80	80	465	52	.2	
0800	80	80	80	465	52	.2	
0900	80	80	80	465	52	.3	
1000	80	80	80	465	52	.3	
1100	80	80	80	465	52	.3	
1200	80	80	80	465	52	.3	
1300	80	80	80	465	52	.3	

NOTES:

WYLE LABORATORIES

DATA SHEET

Report No. 57505
Page No. 82

CUSTOMER: SOUTHERN CALIFORNIA EDISON
Test Title: MSLB
Specimen: 75 HP Submersible Electric Motor
Part No.: M/N 7117636003
Job No.: 57505
S/N: Type CJL7B
Date: 4/30/80

TIME	MOTOR DATA - ELECTRICAL					- MECHANICAL	
	Amps Leg 1	Amps Leg 2	Amps Leg 3	Line Volts	Power in (kw)	Oil Level	Vibration
4/30 1400	80	80	80	465	52	3	OIC
1500	80	80	80	465	52	3	
1600	80	80	80	465	52	3	
1700	80	80	80	465	52	3	
1800	80	80	80	465	52	3	
1900	80	80	80	465	52	3	
2000	80	80	80	465	52	3	
2100	80	80	80	465	52	3	
2200	80	80	80	465	52	3	
2300	80	80	80	465	52	3	
2400	80	80	80	465	52	3	
5/1 0100	80	80	80	465	52	3	
0200	80	80	80	465	52	3	
0300	80	80	80	465	52	3	
0400	80	80	80	465	52	3	
0500	80	80	80	465	52	3	
0600	80	80	80	465	52	3	
0700	80	80	80	465	52	3	
0800	80	80	80	465	52	3	
0900	80	80	80	465	52	3	
1000	80	80	80	465	52	3	
1100	80	80	80	465	52	3	
1200	80	80	80	465	52	3	
1300	80	80	80	465	52	3	OK

NOTES:

WYLE LABORATORIES

DATA SHEET

Report No. 57505
Page No. 83

CUSTOMER SOUTHERN CALIFORNIA EDISON
Test Title: MSLB
Specimen 75 HP Submersible Electric Motor
Part No. M/N 7117636003
Job No. 57505
S/N Type CJL B
Date 5/1/80

	MOTOR DATA - ELECTRICAL					- MECHANICAL	
TIME	Amps Leg 1	Amps Leg 2	Amps Leg 3	Line Volts	Power in (kw)	Oil Level	Vibration
5/1 1400	80	80	80	465	52	.3	OK
1500	80	80	80	465	52	.3	
1600	80	80	80	465	52	.3	
1700	80	80	80	465	52	.3	
1800	80	80	80	465	52	.3	
1900	80	80	80	465	52	.4	
2000	80	80	80	465	52	.4	
2100	80	80	80	465	52	.4	
2200	80	80	80	465	52	.4	
2300	80	80	80	465	52	.4	
2400	80	80	80	465	52	.4	
5/2 0100	80	80	80	465	52	.4	
0200	80	80	80	465	52	.4	
0300	80	80	80	465	52	.4	
0400	80	80	80	465	52	.4	
0500	80	80	80	465	52	.4	
0600	80	80	80	465	52	.5	
0700	80	80	80	465	52	.5	
0800	80	80	80	465	52	.5	
0900	80	80	80	465	52	.5	
1000	80	80	80	465	52	.5	
1100	80	80	80	465	52	.5	
1200	80	80	80	465	52	.5	
1300	80	80	80	465	52	.5	

NOTES:

W 814 B

QC Form Approval

SHEET ____ OF ____

WYLE LABORATORIES

DATA SHEET

Report No. 57505
Page No. 84

CUSTOMER SOUTHERN CALIFORNIA EDISON
Test Title: MSLB
Specimen 75 HP Submersible Electric Motor
Part No. M/N 7117636003
Job No. 57505
S/N Type CJL/B
Date 5/2/80

	MOTOR DATA - ELECTRICAL					MECHANICAL	
TIME	Amps Leg 1	Amps Leg 2	Amps Leg 3	Line Volts	Power in (kw)	Oil Level	Vibration
5/2 1400	80	80	80	465	53	.5	
1500	80	80	80	465	53	.5	
1600	80	80	80	465	53	.5	
1700	80	80	80	465	53	.5	
1800	80	80	80	465	53	.5	
1900	80	80	80	465	53	.5	
2000	80	80	80	465	53	.5	
2100	80	80	80	465	53	.5	
2200	80	80	80	465	53	.5	
2300	80	80	80	465	53	.5	
2400	80	80	80	465	53	.5	
5/3 0100	80	80	80	465	53	.5	
0200	80	80	80	465	53	.6	
0300	80	80	80	465	53	.6	
0400	80	80	80	465	53	.6	
0500	80	80	80	465	53	.6	
0600	80	80	80	465	53	.6	
0700	80	80	80	465	53	.6	
0800	80	80	80	465	53	.6	
0900	80	80	80	465	52	.6	
1000	80	80	80	465	52	.6	
1100	80	80	80	465	52	.6	
1200	80	80	80	465	52	.6	
1300	80	80	80	465	52	.6	

NOTES:

W 614 B

QC Form Approval

SHEET ____ OF ____

WYLE LABORATORIES

DATA SHEET

Report No. 57505
Page No. 85

CUSTOMER SOUTHERN CALIFORNIA EDISON
Test Title: MSLB
Specimen 75 HP Submersible Electric Motor
Part No. M/N 7117636003
Job No. 57505
S/N Type C11 P
Date 5/3/90

TIME	MOTOR DATA - ELECTRICAL Amps Leg 1	Amps Leg 2	Amps Leg 3	Line Volts	Power in (kw)	MECHANICAL Oil Level	Vibration
5/3 1400	80	80	80	465	53	.6	OK
1500	80	80	80	465	52	.6	
1600	80	80	80	465	53	.6	
1700	80	80	80	465	52	.6	
1800	80	80	80	465	52	.6	
1900	80	80	80	465	52	.6	
2000	80	80	80	465	52	.6	
2100	80	80	80	465	52	.6	
2200	80	80	80	465	52	.6	
2300	80	80	80	465	52	.6	
2400	80	80	80	465	52	.6	
5/4 0100	MOTOR DOWN BECAUSE POWER FAILURE.						
0200	80	80	80	465	52	.6	
0300	80	80	80	465	52	.6	
0400	80	80	80	465	52	.6	
0500	80	80	80	465	52	.7	
0600	80	80	80	465	52	.7	
0700	80	80	80	465	52	.7	
0800	80	80	80	465	52	.7	
0900	80	80	80	465	52	.7	
1000	80	80	80	465	52	.7	
1100	80	80	80	465	52	.7	
1200	80	80	80	465	52	.7	
1300	80	80	80	465	53	.7	OK

NOTES: 24:00 POWER OUT.
1:45 POWER BACK ON AFTER 1 HR 5 MINS.

W 614 B

QC Form Approval

SHEET ____ OF ____

WYLE LABORATORIES

DATA SHEET

Report No. 57505
Page No. 86

CUSTOMER SOUTHERN CALIFORNIA EDISON
Test Title: MSLB
Specimen 75 HP Submersible Electric Motor
Part No. M/N 7117636003
Job No. 57505
S/N Type CJL B
Date 5/4/80

	MOTOR DATA – ELECTRICAL					– MECHANICAL	
TIME	Amps Leg 1	Amps Leg 2	Amps Leg 3	Line Volts	Power in (kw)	Oil Level	Vibration
1400	80	80	80	465	53	.7	.01
1500	80	80	80	465	53	.7	
1600	80	80	80	465	53	.7	
1700	80	80	80	465	53	.7	
1800	80	80	80	465	53	.7	
1900	80	80	80	465	53	.7	
2000	80	80	80	465	53	.7	
2100	80	80	80	465	53	.7	
2200	80	80	80	465	53	.7	
2300	80	80	80	465	53	.7	
2400	80	80	80	465	53	.7	
0100	80	80	80	465	53	.8	
0200	80	80	80	465	53	.8	
0300	80	80	80	465	53	.8	
0400	80	80	80	465	53	.8	
0500	80	80	80	465	53	.8	
0600	80	80	80	465	53	.8	
0700	80	80	80	465	53	.8	
0800	80	80	80	465	53	.8	
0900	80	80	80	465	53	.8	
1000	80	80	80	465	53	.8	
1100	80	80	80	465	52	.8	
1200	80	80	80	465	52	.8	
1300	80	80	80	465	52	.8	OK

NOTES:

F14

5/5

W 614 B

QC Form Approval

SHEET ____ OF ____

WYLE LABORATORIES

DATA SHEET

Report No. 57505
Page No. 87

CUSTOMER SOUTHERN CALIFORNIA EDISON
Test Title: MSLB
Specimen 75 HP Submersible Electric Motor
Part No. M/N 7117636003
Job No. 57505
S/N Type CJL-B
Date 5/5/80

	MOTOR DATA - ELECTRICAL					- MECHANICAL	
TIME	Amps Leg 1	Amps Leg 2	Amps Leg 3	Line Volts	Power in (kw)	Oil Level	Vibration
5/5 1400	80	80	80	465	52	.8	OK
1500	80	80	80	465	52	.8	
1600	80	80	80	465	52	.8	
1700	80	80	80	465	52	.8	
1800	80	80	80	465	52	.8	
1900	80	80	80	465	52	.8	
2000	80	80	80	465	52	.8	
2100	80	80	80	465	52	.8	
2200	80	80	80	465	52	.8	
2300	80	80	80	465	52	.8	
2400	80	80	80	465	52	.8	
5/6 0100	80	80	80	465	52	.8	
0200	80	80	80	465	52	.9	
0300	80	80	80	465	52	.9	
0400	80	80	80	465	52	.9	
0500	80	80	80	465	52	.9	
0600	80	80	80	465	52	.9	
0700	80	80	80	465	52	.9	
0800	80	80	80	465	52	.9	
0900	80	80	80	465	53	.9	
1000	80	80	80	465	53	.9	
1100	80	80	80	465	53	.9	
1200	80	80	80	465	53	.9	
1300	80	80	80	465	53	.9	OK

NOTES:

W 814 B

QC Form Approval

SHEET ____ OF ____

WYLE LABORATORIES

DATA SHEET

Report No. 57505
Page No. 88

CUSTOMER SOUTHERN CALIFORNIA EDISON
Test Title: MSLB
Specimen 75 HP Submersible Electric Motor
Part No. M/N 7117636003
Job No. 57505
S/N Type CJLP
Date 5/6/80

TIME	MOTOR DATA - ELECTRICAL					- MECHANICAL	
	Amps Leg 1	Amps Leg 2	Amps Leg 3	Line Volts	Power in (kw)	Oil Level	Vibration
5/6 1400	80	80	80	465	53	.9	OK
1500	80	80	80	465	53	.9	
1600	80	80	80	465	53	.9	
1700	80	80	80	465	53	.9	
1800	80	80	80	465	53	.9	
1900	80	80	80	465	53	.9	
2000	80	80	80	465	53	.9	
2100	80	80	80	465	53	.9	
2200	80	80	80	465	53	.9	
2300	80	80	80	465	53	.9	
2400	80	80	80	465	53	.9	
5/7 0100	80	80	80	465	53	1.0	
0200	80	80	80	465	53	1.0	
0300	80	80	80	465	53	1.0	
0400	80	80	80	465	53	1.0	
0500	80	80	80	465	53	1.0	
0600	80	80	80	465	53	1.0	
0700	80	80	80	465	53	1.0	
0800	80	80	80	465	53	1.0	
0900	80	80	80	465	53	1.0	
1000	80	80	80	465	53	1.0	
1100	80	80	80	465	53	1	
1200	80	80	80	465	52	1	
1300	80	80	80	465	52	1	OK

NOTES:

W 614 B

QC Form Approval

SHEET ____ OF ____

WYLE LABORATORIES

DATA SHEET

Report No. 57505
Page No. 89

CUSTOMER SOUTHERN CALIFORNIA EDISON
Test Title: MSLB
Specimen 75 HP Submersible Electric Motor
Part No. M/N 7117636003
Job No. 57505
S/N Type CJL B
Date 5/7/80

	MOTOR DATA - ELECTRICAL					- MECHANICAL	
TIME	Amps Leg 1	Amps Leg 2	Amps Leg 3	Line Volts	Power in (kw)	Oil Level	Vibration
5/7 1400	80	80	80	465	52	1.	OK
1500	80	80	80	465	52	1.	
1600	80	80	80	465	52	1.	
1700	80	80	80	465	52	1.	
1800	80	80	80	465	52	1.	
1900	80	80	80	465	52	1.	
2000	80	80	80	465	52	1.	
2100	80	80	80	465	52	1.	
2200	80	80	80	465	52	1.	
2300	80	80	80	465	52	1	
2400	80	80	80	465	52	1.	
5/8 0100	80	80	80	465	52	1.	
0200	80	80	80	465	52	1.1	
0300	80	80	80	465	52	1.1	
0400	80	80	80	465	52	1.1	
0500	80	80	80	465	52	1.1	
0600	80	80	80	465	52	1.1	
0700	80	80	80	465	52	1.1	
0800	80	80	80	465	52	1.1	
0900	80	80	80	465	52	1.1	
1000	80	80	80	465	52	1.1	
1100	80	80	80	465	52	1.1	
1200	80	80	80	465	52	1.1	
1300	80	80	80	465	52	1.1	OK

NOTES:

W 814 B

QC Form Approval

SHEET _____ OF _____

WYLE LABORATORIES

DATA SHEET

Report No. 57505
Page No. 90

CUSTOMER SOUTHERN CALIFORNIA EDISON
Test Title: MSLB
Specimen 75 HP Submersible Electric Motor
Part No. M/N 7117636003
Job No. 57505
S/N Type CJL/B
Date 5/8/80

TIME	MOTOR DATA + ELECTRICAL					MECHANICAL	
	Amps Leg 1	Amps Leg 2	Amps Leg 3	Line Volts	Power in (kw)	Oil Level	Vibration
5/8 1400	80	80	80	465	52	1.1	OK
1500	80	80	80	465	52	1.1	
1600	80	80	80	466	52	1.1	
1700	80	80	80	465	52	1.1	
1800	80	80	80	465	52	1.1	
1900	80	80	80	465	52	1.2	
2000	80	80	80	465	52	1.2	
2100	80	80	80	465	52	1.2	
2200	80	80	80	465	52	1.2	
2300	80	80	80	465	52	1.2	
2400	80	80	80	465	52	1.2	
5/9 0100	80	80	80	465	52	1.2	
0200	80	80	80	465	52	1.2	
0300	80	80	80	465	52	1.2	
0400	80	80	80	465	52	1.2	
0500	80	80	80	465	52	1.2	
0600	80	80	80	465	52	1.2	
0200	80	80	80	465	52	1.2	
0800	80	80	80	465	52	1.2	
0900	80	80	80	465	52	1.2	
1000	80	80	80	465	52	1.2	
1100	80	80	80	465	52	1.2	
1200	80	80	80	465	52	1.2	
1300	80	80	80	465	52	1.2	

NOTES:

W 616 B

QC Form Approval

SHEET ____ OF ____

WYLE LABORATORIES

DATA SHEET

Report No. 57505

Page No. 91

CUSTOMER SOUTHERN CALIFORNIA EDISON

Test Title: MSLB

Specimen 75 HP Submersible Electric Motor

Part No. M/N 7117636003

Job No. 57505

S/N Type CJL/B

Date 5/9/80

	MOTOR DATA - ELECTRICAL						- MECHANICAL
TIME	Amps Leg 1	Amps Leg 2	Amps Leg 3	Line Volts	Power in (kw)	Oil Level	Vibration
5/9 1400	80	80	80	465	52	1.2	OK
1500	80	80	80	465	52	1.2	
1600	80	80	80	465	52	1.2	
1700	80	80	80	465	52	1.2	
1800	80	80	80	465	52	1.3	
1900	80	80	80	465	52	1.3	
2000	80	80	80	465	52	1.3	
2100	80	80	80	465	52	1.3	
2200	80	80	80	465	52	1.3	
2300	80	80	80	465	52	1.3	
2400	80	80	80	465	52	1.3	
5/10 0100	80	80	80	465	52	1.3	
0200	80	80	80	465	52	1.3	
0300	80	80	80	465	52	1.3	
0400	80	80	80	465	52	1.3	
0500	80	80	80	465	52	1.3	
0600	80	80	80	465	52	1.3	
0700	80	80	80	465	52	1.3	
0800	80	80	80	465	52	1.3	
0900	80	80	80	465	52	1.3	
1000	80	80	80	465	52	1.4	
1100	80	80	80	465	52	1.4	
1200	80	80	80	465	52	1.4	
1300	80	80	80	465	52	1.4	OK

NOTES:

W 814 B

QC Form Approval

SHEET _____ OF _____

WYLE LABORATORIES

DATA SHEET

Report No. 57505
Page No. 92

CUSTOMER: SOUTHERN CALIFORNIA EDISON
Test Title: MSLB
Specimen: 75 HP Submersible Electric Motor
Part No.: M/N 7117636003
Job No.: 57505
S/N: Type CJL-B
Date: 5/10/80

	TIME	MOTOR DATA - ELECTRICAL Amps Leg 1	Amps Leg 2	Amps Leg 3	Line Volts	Power in (kw)	MECHANICAL Oil Level	Vibration
5/10	1400	80	80	80	465	53	1.4	OK
	1500	80	80	80	465	53	1.4	
	1600	80	80	80	465	53	1.4	
	1700	80	80	80	465	53	1.4	
	1800	80	80	80	465	53	1.4	
	1900	80	80	80	465	53	1.4	
	2000	80	80	80	465	53	1.4	
	2100	80	80	80	465	53	1.4	
	2200	80	80	80	465	53	1.4	
	2300	80	80	80	465	53	1.4	
	2400	80	80	80	465	53	1.4	
5/11	0100	80	80	80	465	53	1.4	
	0200	80	80	80	465	53	1.4	
	0300	80	80	80	465	53	1.5	
	0400	80	80	80	465	53	1.5	
	0500	80	80	80	465	53	1.5	
	0600	80	80	80	465	53	1.5	
	0700	80	80	80	465	53	1.5	
	0800	80	80	80	465	53	1.5	
	0900	80	80	80	465	53	1.5	
	1000	80	80	80	465	53	1.5	
	1100	80	80	80	465	53	1.5	
	1200	80	80	80	465	52	1.5	
	1300	80	80	80	465	52	1.5	

NOTES:

W 614 B

QC Form Approval

SHEET ____ OF ____

WYLE LABORATORIES

DATA SHEET

Report No. 57505
Page No. 93

CUSTOMER: SOUTHERN CALIFORNIA EDISON
Test Title: MSLB
Specimen: 75 HP Submersible Electric Motor
Part No.: M/N 7117636003
Job No.: 57505
S/N: Type CJL-B
Date: 5/11/90

TIME	MOTOR DATA - ELECTRICAL					- MECHANICAL	
	Amps Leg 1	Amps Leg 2	Amps Leg 3	Line Volts	Power in (kw)	Oil Level	Vibration
1400	80	80	80	465	52	1.5	OK
1500	80	80	80	465	52	1.5	
1600	80	80	80	465	52	1.5	
1700	80	80	80	465	52	1.5	
1800	80	80	80	465	52	1.5	
1900	80	80	80	465	52	1.5	
2000	80	80	80	465	52	1.5	
2100	80	80	80	465	52	1.5	
2200	80	80	80	465	52	1.5	
2300	80	80	80	465	52	1.5	
2400	80	80	80	465	52	1.6	
5/12 0100	80	80	80	465	52	1.6	
0200	80	80	80	465	52	1.6	
0300	80	80	80	465	52	1.6	
0400	80	80	80	465	52	1.6	
0500	80	80	80	465	52	1.6	
0600	80	80	80	465	52	1.6	
0700	80	80	80	465	52	1.6	
0800	80	80	80	465	52	1.6	
0900	80	80	80	465	52	1.6	
1000	80	80	80	465	52	1.6	
1100	80	80	80	465	52	1.6	
1200	80	80	80	465	52	1.6	
1300	80	80	80	465	52	1.6	OK

NOTES:

W 814 B

QC Form Approval

SHEET ____ OF ____

WYLE LABORATORIES

DATA SHEET

Report No. 57505
Page No. 94

CUSTOMER: SOUTHERN CALIFORNIA EDISON
Test Title: MSLB
Specimen: 75 HP Submersible Electric Motor
Part No.: M/N 7117636003
Job No.: 57505
S/N: Type CJL B
Date: 4th of 5/12/80

TIME	MOTOR DATA - ELECTRICAL					- MECHANICAL	
	Amps Leg 1	Amps Leg 2	Amps Leg 3	Line Volts	Power in (kw)	Oil Level	Vibration
5/12 1400	80	80	80	465	53	1.6	OK
1500	80	80	80	465	53	1.6	
1600	80	80	80	465	53	1.6	
1700	80	80	80	465	53	1.6	
1800	80	80	80	465	52	1.6	
1900	80	80	80	465	52	1.6	
2000	80	80	80	465	52	1.6	
2100	80	80	80	465	52	1.6	
2200	80	80	80	465	52	1.6	
2300	80	80	80	465	52	1.6	
2400	80	80	80	465	52	1.6	
5/13 0100	80	80	80	465	52	1.7	
0200	80	80	80	465	52	1.7	
0300	80	80	80	465	52	1.7	
0400	80	80	80	465	52	1.7	
0500	80	80	80	465	52	1.7	
0600	80	80	80	465	52	1.7	
0700	80	80	80	465	52	1.7	
0800	- - -	- - -	- - -	- - -	- - -	- - -	

NOTES:
07:00 TEST COMPLETED

W 814 B

QC Form Approval

SHEET ____ OF ____

SPECIMEN 7SHP SUBMERSIBLE MOTOR
CUSTOMER SCE
PART NO. 7117636003
S/N TYPE CTL66

JOB NO. 57505
DATE 4-3-80 / 5-13-80
TEST BY B.GREIFERMAN & A.SMITH
WITNESS S.SHAW & W.HUBBARD

WYLE LABORATORIES TEST: MSLB

EQUIPMENT	MANUFACTURER	MODEL NO.	RANGE	WYLE NO.	CALIBRATION LAST	CALIBRATION DUE	ACCY.
PRESSURE GAUGE	ASHCROFT	1279S	0-100 PSI	7709	2-25-80	5-25-80	±.5%
PRESSURE GAUGE	ASHCROFT	1279S	0-100 PSI	7706	2-25-80	5-25-80	±.5%
POWER SUPPLY	VALIDYNE	MCI-3	0-10V DC	8101	SYSTEM	CALIBRATION	N/A
DATA LOGGER	FLUKE	2240A	DATA	8276	8-8-79	8-10-80	DATA
AMMETER	DAYSTROM	904	25-500 CYCLES	3340	4-8-80	10-4-80	±1%
AMMETER	WESTERN ELECTRICAL INSTRUMENT CORP	433	25-500 CYCLES	3350	2-25-80	6-29-80	±.75%
AMMETER	WESTERN ELECTRICAL INSTRUMENT CORP	433	25-500 CYCLES	3356	2-19-80	6-22-80	±.75%
VOLTMETER	DAYSTROM	433	0-600 VOLTS	30132	11-6-79	7-20-80	±.75%
WATTMETER	ESTERLINE ANGUS	A6016	0-3000 WATTS	L-19877	4-8-80	8-10-80	±1%
VOLTMETER	WESTINGHOUSE	PX5	0-7.5V DC	3315	3-28-80	8-3-80	±.5%
CIRCULAR CONTROLLER	HONEYWELL	152193/6-01-07-2 239-024-51-202	-350°F TO +350°F	8267	2-15-80	6-15-80	±.5%
CIRCULAR CONTROLLER	HONEYWELL	R15214326-01-01-2 269-024-51-202	-100°F TO +300°F	31483	2-15-80	6-15-80	±.5%
DIGITAL THERMOCOUPLE READOUT	ANALOGIC	AN2572	-100°F TO +750°F	8544	3-27-80	3-29-81	±2%
DIGITAL THERMOCOUPLE READOUT	ANALOGIC	AN2572	-100°F TO +750°F	8546	3-27-80	3-29-81	±2%
AMPMETER	WESTON	433	25-500 CYCLES	3353	1-24-80	5-25-80	±.75%

Report No. 57505 Page No. 94A

W 614 C Q.C. Approval

SHEET OF

SPECIMEN "O" RINGS AND GASKETS

CUSTOMER SCE

PART NO. N/A

S/N N/A

TEST: TEMPERATURE AGING

JOB NO. 57505

DATE 3-14-80 - 3/22/80

TEST BY R STEEN

WITNESS ——

WYLE LABORATORIES

EQUIPMENT	MANUFACTURER	MODEL NO.	RANGE	WYLE NO.	CALIBRATION LAST	CALIBRATION DUE	ACCY.
TEMPERATURE CONTROLLER	HONEYWELL	-71	-350 + 350F	W6412	3/10/80	7/13/80	±0.5%
TEMPERATURE CONTROLLER	HONEYWELL	-71	-350 TO +350°F	8267	2-15-80	6-15-80	±0.5%
TEMP CHMBR	WYLE	NEQ-1	-108 — 400F	N/A	SYSTEM	——	——
TEMP CHMBR	WYLE	NEQ-2	-108 - 400F	N/A	SYSTEM	——	——

Report No. 57505

Page No. 94B

W 614 C

Q.C. Approval

SHEET OF

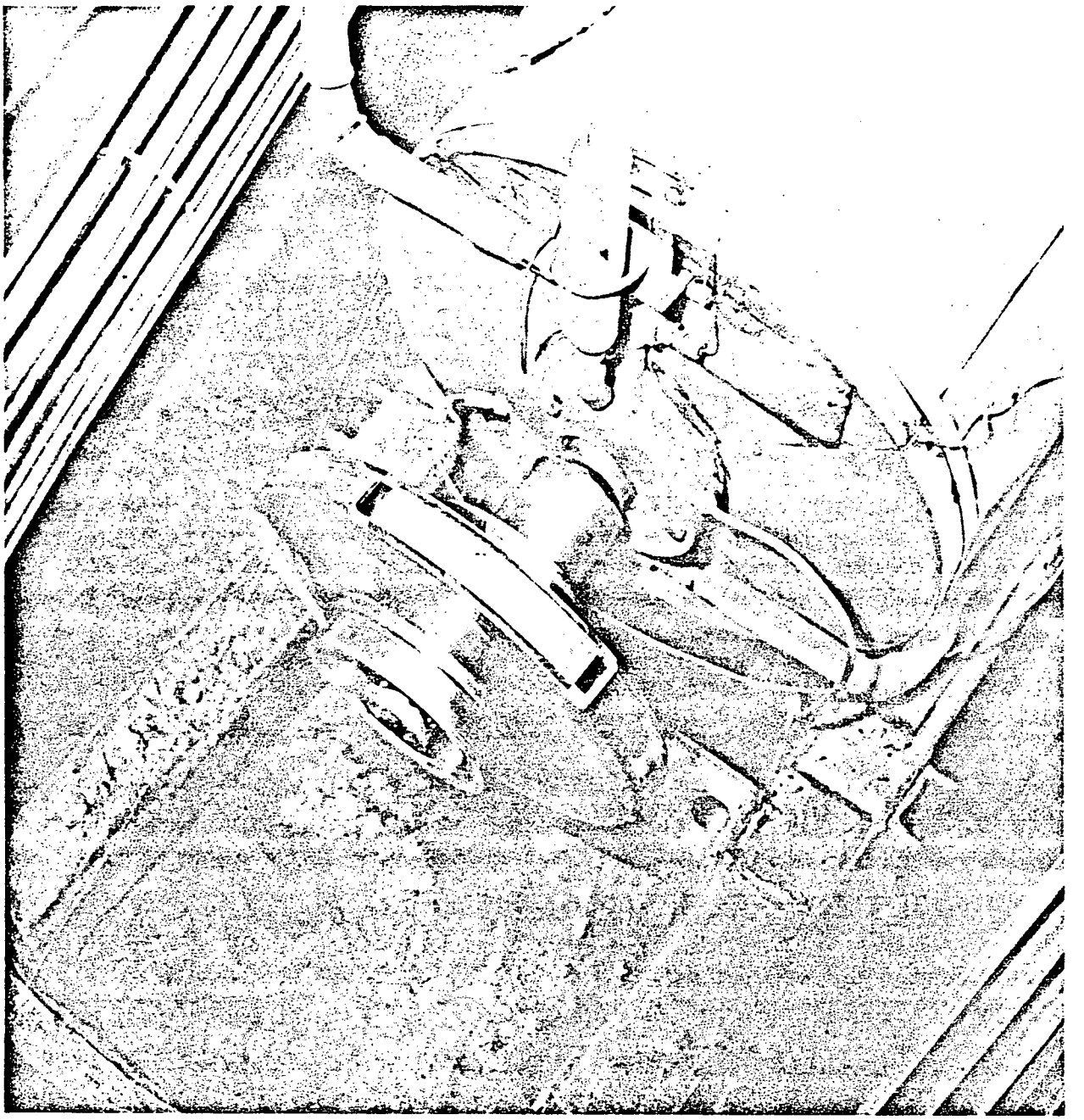

PHOTOGRAPH 1

POST MSLB DETAIL

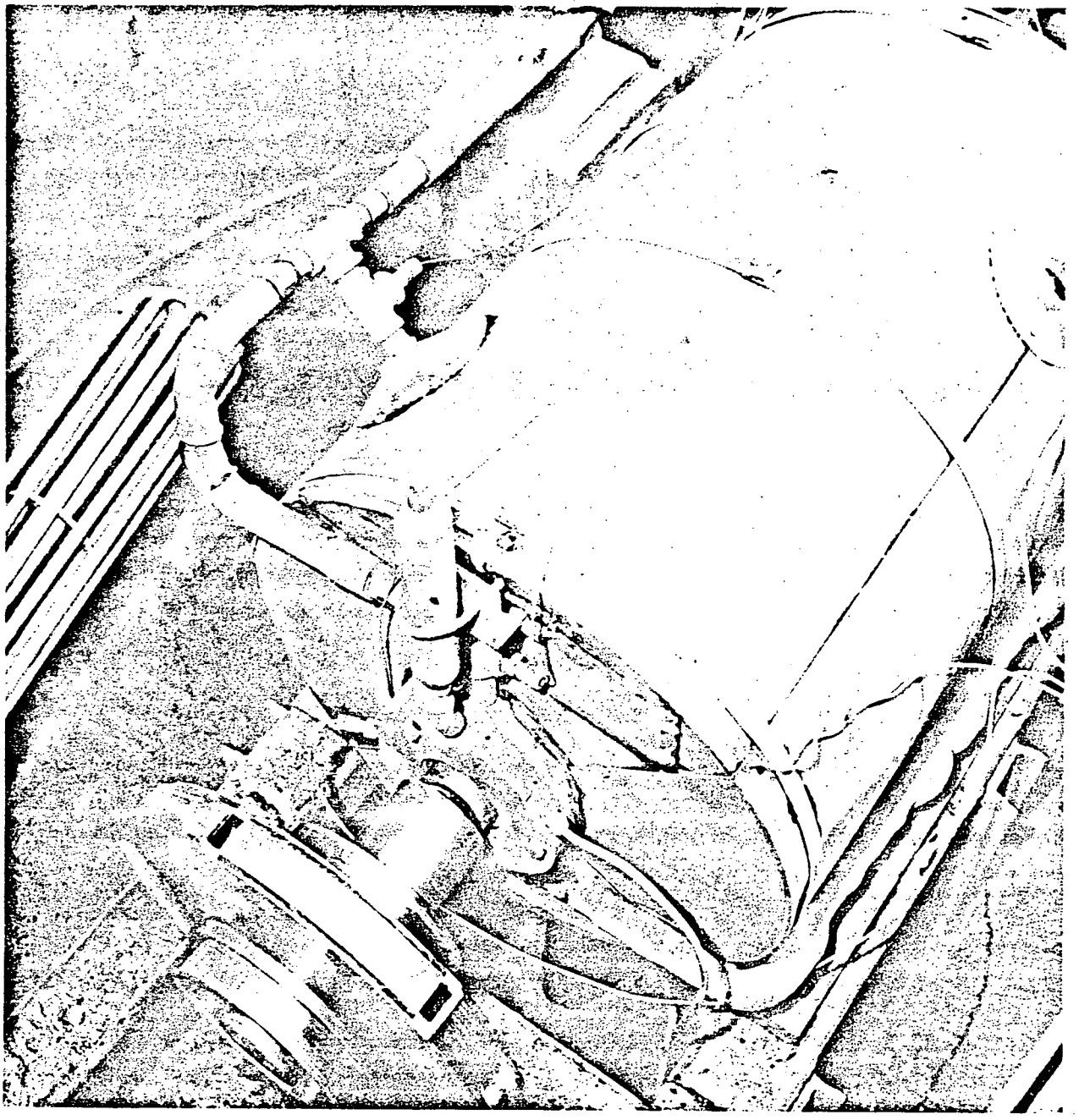

PHOTOGRAPH 2

POST MSLB DETAIL

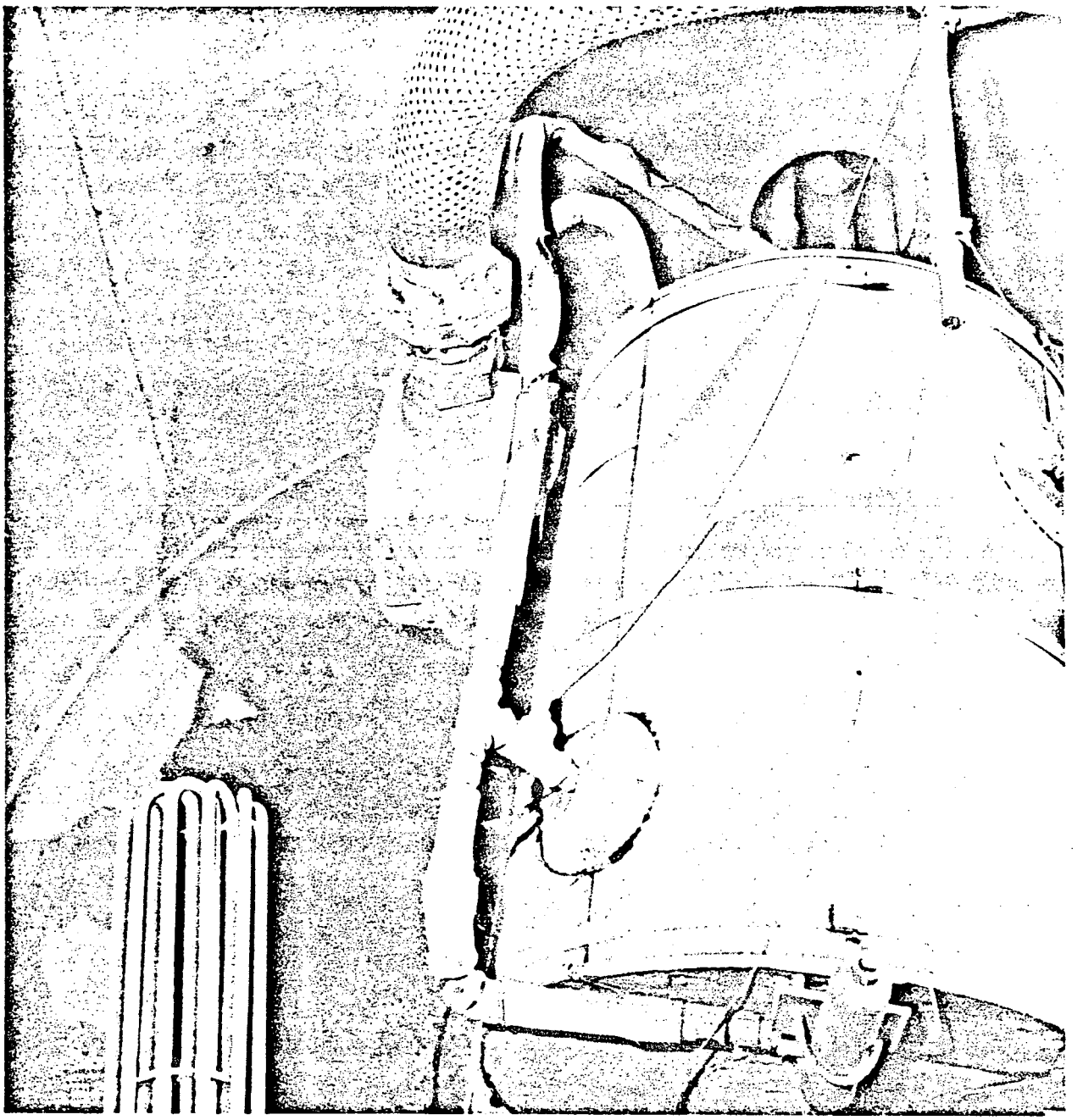

PHOTOGRAPH 3

POST MSLB DETAIL

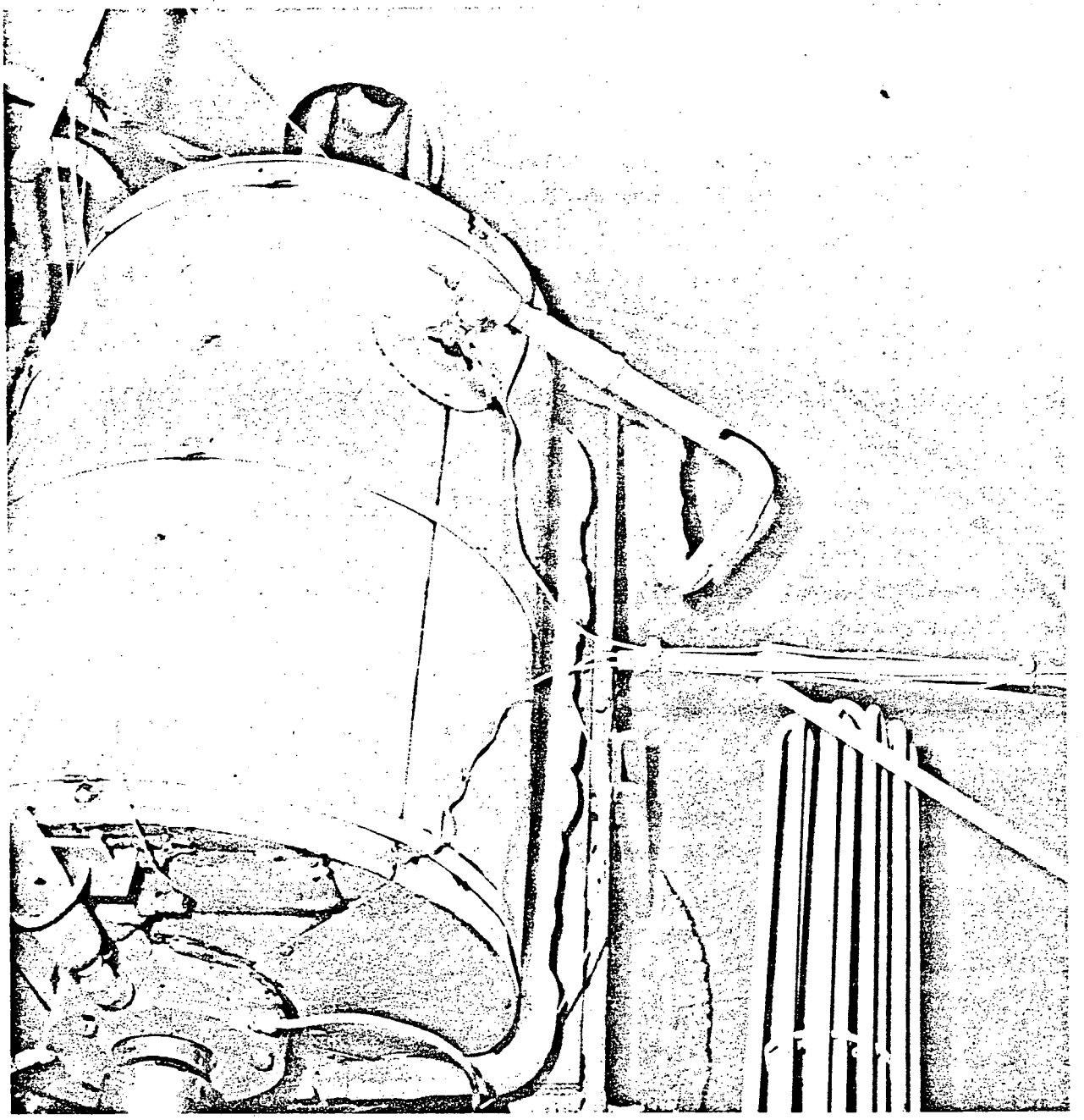

PHOTOGRAPH 4

POST MSLB DETAIL

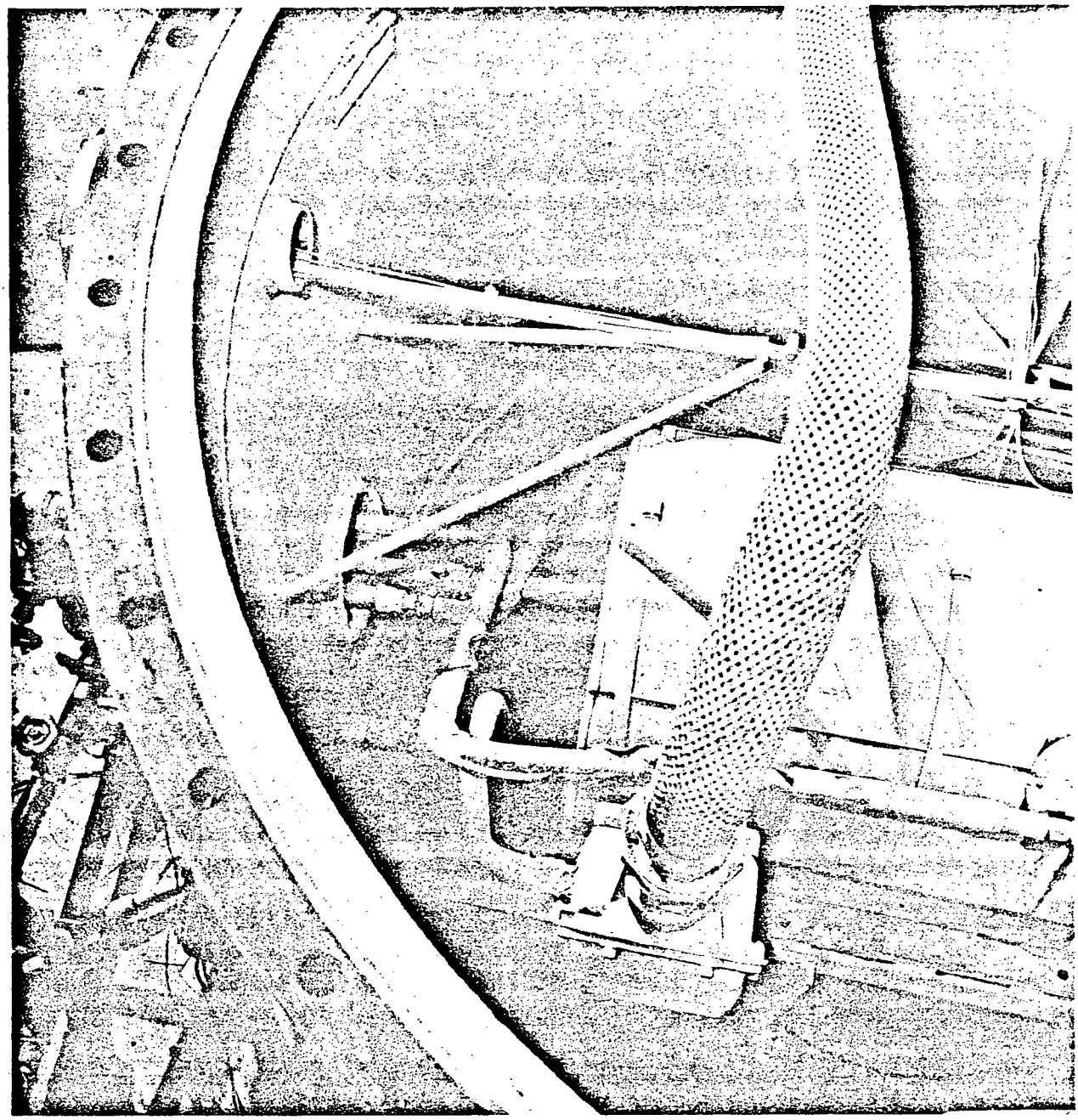

PHOTOGRAPH 5

POST MSLB DETAIL

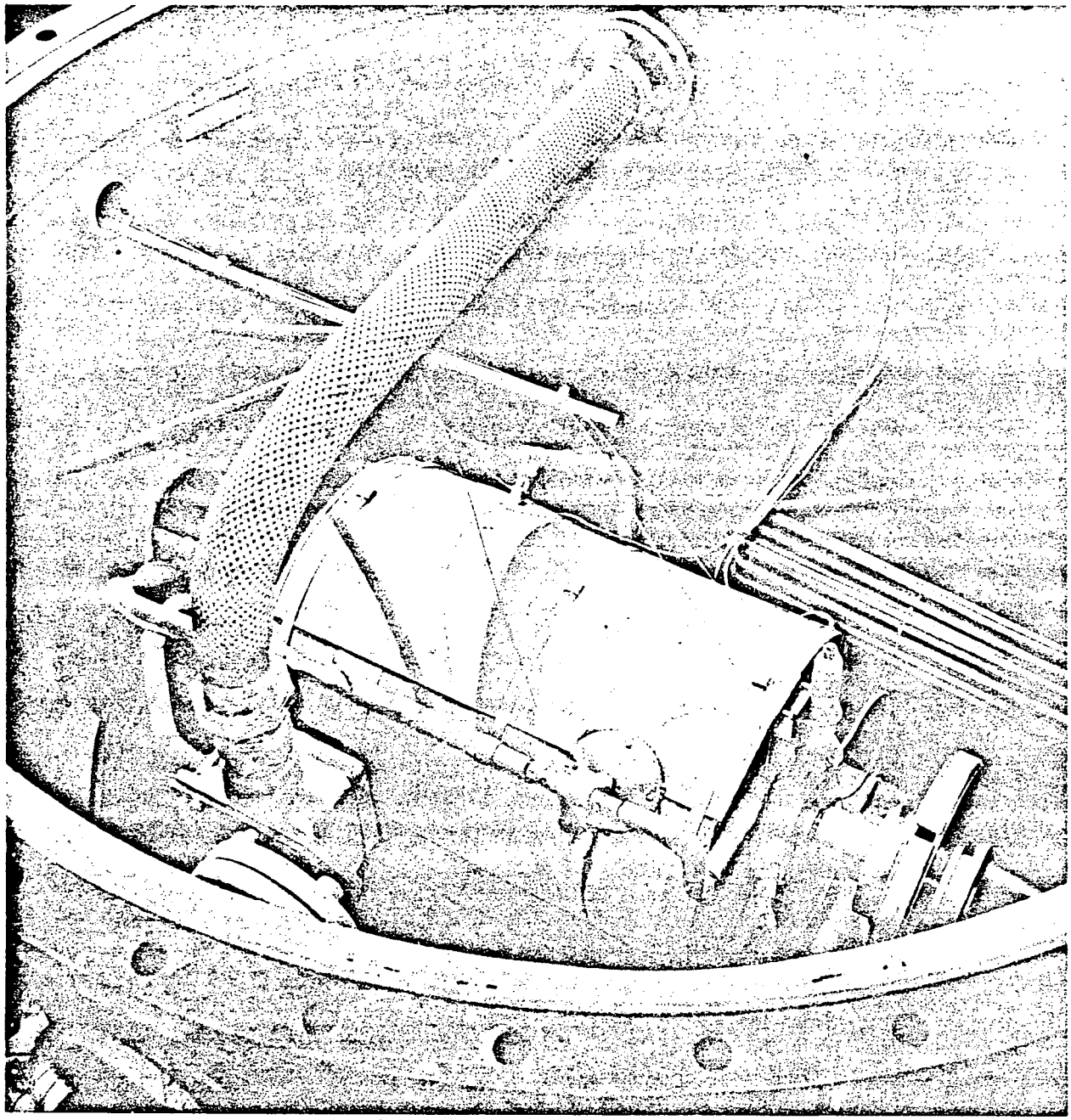

PHOTOGRAPH 6

POST MSLB DETAIL

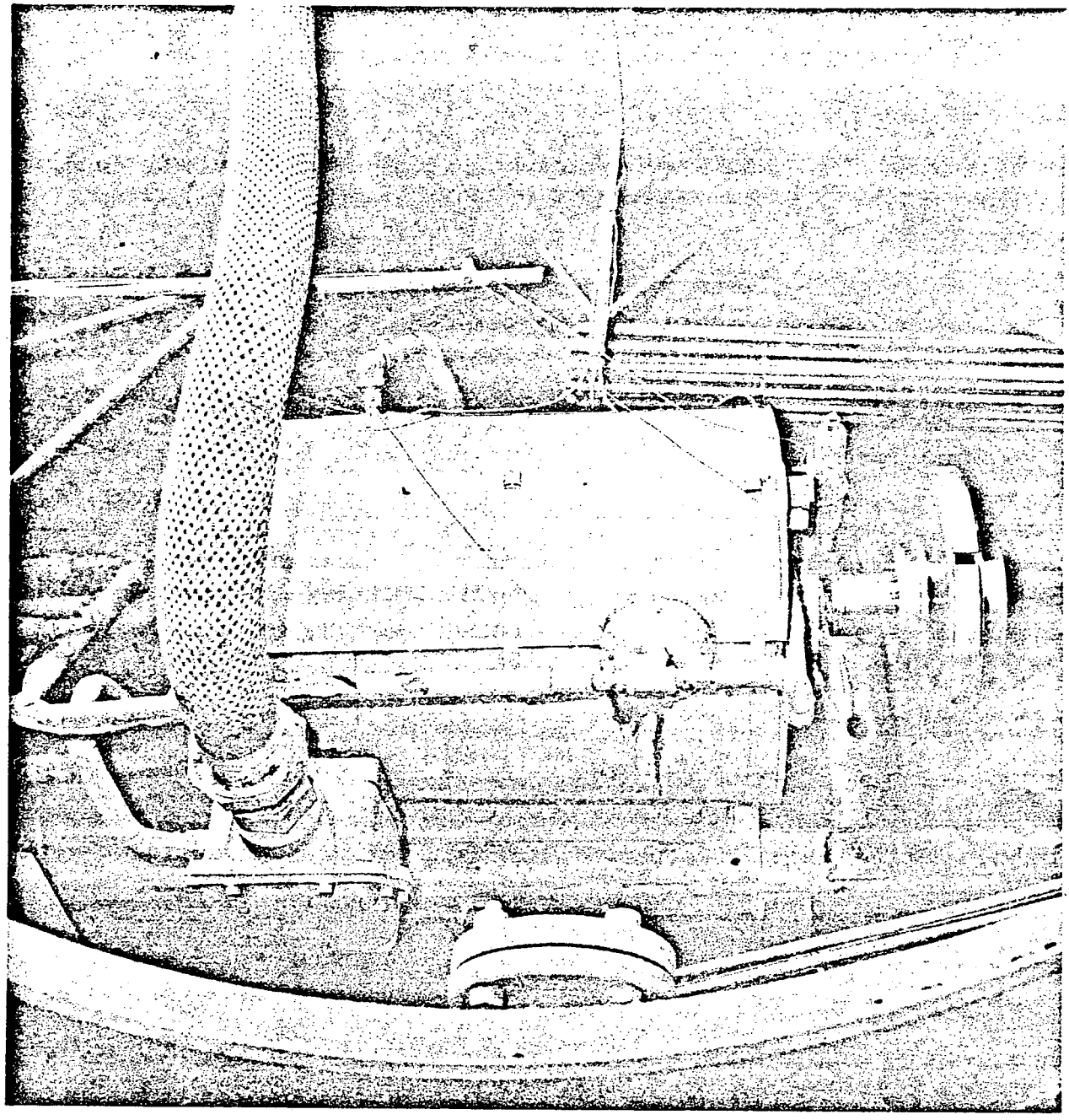

PHOTOGRAPH 7

POST MSLB DETAIL

APPENDIX A

IRRADIATION TESTING CERTIFICATIONS

(5 Pages)

WYLE LABORATORIES

Atomics International Division
8900 De Soto Avenue
Canoga Park, California 91304
(213) 341-1000

Rockwell International

CERTIFICATE OF GAMMA RADIATION DOSE

CUSTOMER WYLE LABORATORIES

PURCHASE ORDER NO. 5184

DATE IN 8-21-1978

TIME IN _____

DATE OUT 8-21-1978

TIME OUT _____

MINIMUM DOSE 4.0×10^6 Rads

MAXIMUM DOSE 5.0×10^6 Rads

Signature F. E. Bigley

6 Parker "O" Rings 16P00174-0001
6 Base Gaskets 08T03885-0007
6 Cover Gaskets 08T03885-0000
1 Pt. Dow 510 oil
4 Assorted "O" Rings

Atomics International Division
8900 De Soto Avenue
Canoga Park, California 91304
(213) 341-1000

Rockwell International

CERTIFICATE OF GAMMA RADIATION DOSE

CUSTOMER WYLE LABORATORIES

PURCHASE ORDER NO. 5840
RTV SEALANT & 4gAL. OIL WL

DATE IN 11-28-78

TIME IN 1500

DATE OUT 11-29-78

TIME OUT 0800

MINIMUM DOSE 4.5×10^6 RADS

MAXIMUM DOSE 7.4×10^6 RADS

Signature R K Paschall

CERTIFICATION OF IRRADIATION

Customer: **Wyle Laboratories**

Irradiation Run Date: **January 21, 1980**

Irradiation Run Number: **WL80002**

List and Description of Materials:

3 cartons seal ass'y

Radiation Sterilizers, Incorporated certifies that this material received a minimum dose of 0.5 MRad.

Certified by William W. Wadman III for
William W. Wadman III
Director of Operations

RADIATION STERILIZERS INCORPORATED

CERTIFICATION OF IRRADIATION

CUSTOMER: Wyle Laboratories

IRRADIATION RUN DATE: March 24, 1980

IRRADIATION RUN NUMBER: WL80003

LIST AND DESCRIPTION OF MATERIALS:

1 carton Seal Parts

Radiation Sterilizers, Incorporated certifies that this material received a minimum dose of 0.5 MRad.

Certified by Allan Chin

1401 Morgan Circle, Tustin, California 92680 / Telephone (714) 730-0611

CERTIFICATION OF IRRADIATION

Customer: Wyle Laboratories

Irradiation Run Date: January 14, 1980

Irradiation Run Number: WL80001

List and Description of Materials:

one five gallon can of oil

Radiation Sterilizers, Incorporated certifies that this material received a minimum dose of 4.0 MRad, at a rate of 0.0866 MRad/hour. Can was rotated 180° at the approximate midpoint.

Certified by

William W. Wadman III
Director of Operations

APPENDIX B

DATA OBTAINED IN AN EARLIER TEST,
WHICH SHOWS TYPICAL WINDING TEMPERATURE

(11 Pages)

WYLE LABORATORIES

DATA SHEET

Report No. 57505
Page No. 109

CUSTOMER SOUTHERN CALIFORNIA EDISON
Test Title: MSLB
Specimen 75 HP Submersible
Electric Motor
Part No. M/N 7117636003
Job No. 57505
S/N Type CJL6R
Date 4/28/1980

SCE 5 7 8 9 10

	MOTOR WINDING TEMPERATURES (F)						SEAL COOLING WATER			MOTOR COOLING WATER			CHAMBER SOLUTION		SEAL OIL
TIME	Ch. No. 7	8	9	10	11	Seal #5 (OIL)	T-in #2	T-out #4	Flow	T-in #3	T-out #1	Flow	Temp #0	Press #12	P (psig)
2/28 1900	225	225	206	204	203	219	139	145	6.1	139	157	6.1	239	36	40
2000	229	229	211	208	208	231	141	147	6.2	141	159	6.2	256	37	42
2100	231	231	215	211	211	240	141	148	6.2	141	–	6.2	254	39	43
2200	233	233	218	214	214	253	140	148	6.2	140	–	6.2	266	62	66
2300	MOTOR OFF FOR TEMP RAMP														
2400	220	219	220	197	198	220	139	145	6.1	139	–	6.1	214	35	40
2/29 0100	224	224	207	204	204	229	139	145	6.1	139	–	6.1	229	46	45
0200	228	229	212	209	209	243	139	146	6.1	139	–	6.1	245	45	50
0300	231	231	216	212	213	251	140	147	6.1	140	–	6.1	257	47	52
0400	MOTOR OFF FOR TEMP RAMP														
0500															
0600	208	207	190	188	188	226	138	143	6.1	138	–	6.1	209	50	55
0700	223	222	205	202	203	238	139	145	6.1	139	–	6.1	225	50	55
0800	228	227	211	208	209	243	139	145	6.1	139	–	6.1	236	50	55
0900	236	230	214	211	212	249	139	146	6.1	139	–	6.1	248	50	55
1000	231	233	218	214	215	256	140	147	6.2	140	163	6.1	260	49	55
1100	231	234	221	217	217	253	140	147	6.2	140	164	6.1	266	48	55
1200	231	234	220	216	216	257	140	147	6.1	140	165	6.1	269	50	55
1300	230	234	220	216	216	238	140	147	6.2	140	165	6.1	268	48	55
1400	229	233	219	215	214	247	140	147	6.2	140	163	6.1	264	50	55
1500	229	233	219	215	215	251	140	148	6.2	141	165	6.1	269	50	55
1600	228	233	220	215	216	252	140	149	6.2	141	165	6.1	269	50	55

NOTES:

QC Form Approval

SHEET ____ OF ____

WYLE LABORATORIES

DATA SHEET

Report No. 57505
Page No. 110

CUSTOMER SOUTHERN CALIFORNIA EDISON
Test Title: MSLB
Specimen 75 HP Submersible
Part No. M/N 7117636003 Electric Motor
Job No. 57505
S/N Type CJL6B
Date 2/29/80

SC 5 7 8 9 10

TIME	MOTOR WINDING TEMPERATURES (F) Ch. No. 7	8	9	10	11	SEAL COOLING WATER Seal #5	T-in #2	T-out #4	Flow	MOTOR COOLING WATER T-in #3	T-out #1	Flow	CHAMBER SOLUTION Temp #0	Press #12	SEAL OIL P (psig)
2/29 1700	229	233	220	215	213	299	141	148	6.1	141	165	6.0	270	48	55
1800	229	233	220	216	214	299	140	148	6.2	140	164	6.1	268	50	55
1900	229	233	220	216	219	296	141	149	6.2	141	165	6.1	269	51	55
2000	229	233	220	216	215	245	141	148	6.2	141	165	6.1	267	50	55
2100	229	233	224	219	206	244	140	148	6.2	141	165	6.1	268	49	55
2200	228	234	224	220	210	244	141	149	6.2	142	165	6.1	267	49	55
2300	228	234	225	220	206	243	141	148	6.2	141	165	6.1	268	49	55
2400	229	234	225	220	207	244	140	148	6.2	140	165	6.1	268	49	55
3/1 0100	226	234	226	222	205	241	141	148	6.2	141	165	6.1	266	49	55
0200	228	235	222	216	204	243	141	149	6.2	141	164	6.1	269	50	55
0300	227	236	221	214	199	242	141	149	6.2	141	164	6.1	268	49	55
0400	229	236	221	213	203	243	140	148	6.2	141	165	6.1	269	49	55
0500	229	237	221	212	203	241	141	149	6.2	141	164	6.1	266	49	55
0600	231	237	221	213	202	242	141	148	6.2	141	164	6.1	266	49	55
0700	229	238	221	214	201	240	141	148	6.2	141	164	6.1	266	49	55
0800	233	238	221	213	203	241	141	148	6.2	141	164	6.1	266	49	55
0900	238	239	222	214	205	242	141	149	6.2	141	165	6.1	268	51	56
1000	233	239	221	212	203	241	141	149	6.2	142	165	6.1	268	51	56
1100	228	239	222	214	202	241	141	148	6.2	141	165	6.1	267	51	56
1200	242	238	221	214	203	240	141	148	6.2	141	164	6.1	266	50	55
1300	234	237	221	212	203	241	141	149	6.2	142	165	6.1	267	50	56
1400	202	236	220	212	200	240	141	149	6.2	141	164	6.1	267	50	55

NOTES:

QC Form Approval

SHEET ____ OF ____

WYLE LABORATORIES

DATA SHEET

Report No. 57505
Page No. 111

CUSTOMER SOUTHERN CALIFORNIA EDISON
Test Title: MSLB
Specimen 75 HP Submersible
Electric Motor
Part No. M/N 7117636003
Job No. 57505
S/N Type CJL6B
Date 3/1/80

S No. 5 7 8 9 10

TIME	MOTOR WINDING TEMPERATURES (F) Ch. No. 7	8	9	10	11	SEAL COOLING WATER Seal #5	T-in #2	T-out #4	Flow	MOTOR COOLING WATER T-in #3	T-out #1	Flow	CHAMBER SOLUTION Temp #0	Press #12	SEAL OIL P (psig)
1500	233	236	220	212	201	242	141	149	6.2	141	165	6.1	268	51	56
1600	228	236	220	213	200	241	141	149	6.2	141	164	6.1	269	51	56
1700	228	235	221	214	201	242	141	149	6.2	141	164	6.1	269	51	56
1800	228	235	222	214	201	240	141	148	6.2	141	163	6.1	265	50	56
1900	228	235	223	216	206	241	141	148	6.1	141	164	6.1	269	51	56
2000	229	235	223	215	204	242	141	148	6.1	141	164	6.0	269	50	55
2100	229	234	224	217	204	242	141	148	6.1	141	164	6.1	268	49	55
2200	228	234	226	218	207	242	141	148	6.1	141	164	6.1	268	49	55
2300	228	234	225	217	206	243	141	149	6.1	141	164	6.1	268	49	55
2400	228	234	225	217	205	244	140	148	6.1	141	164	6.1	269	49	55
0100	229	234	225	218	207	243	140	148	6.1	140	164	6.1	268	49	55
0200	234	234	225	217	207	242	140	148	6.1	141	163	6.1	267	49	55
0300	231	234	224	217	207	241	140	148	6.1	140	163	6.1	268	49	55
0400	230	233	224	217	206	242	141	148	6.1	141	164	6.1	269	50	55
0500	228	233	226	218	206	244	140	148	6.1	140	164	6.1	269	50	55
0600	234	232	225	218	207	243	140	148	6.1	141	163	6.1	268	49	55
0700	233	233	226	219	207	245	141	148	6.1	141	164	6.1	269	50	55
0800	234	232	226	219	206	244	140	148	6.1	140	163	6.1	268	49	55
0900	230	232	225	218	206	244	141	148	6.1	141	163	6.1	267	51	56
1000	231	233	225	219	207	242	140	148	6.1	140	163	6.1	267	51	56
1100	232	233	226	220	208	245	140	148	6.2	140	163	6.1	270	52	57 D.K.
1200	228	233	226	219	206	244	140	147	6.2	140	163	6.1	267	50	56

NOTES:

3/1 QC Form Approval

W 1148

SHEET ____ OF ____

WYLE LABORATORIES

DATA SHEET

Report No. 57505
Page No. 112

CUSTOMER SOUTHERN CALIFORNIA EDISON
Test Title: MSLB
Specimen 75 HP Submersible
Electric Motor
Part No. M/N 7117636003
Job No. 57505
S/N Type CJL6B
Date 3/2/80

SC 5 7 8 9 10

	MOTOR WINDING TEMPERATURES (F)						SEAL COOLING WATER			MOTOR COOLING WATER			CHAMBER SOLUTION		SEAL OIL
TIME	Ch. No. 7	8	9	10	11	Seal #5	T-in #2	T-out #4	Flow	T-in #3	T-out #1	Flow	Temp #0	Press #12	P (psig)
3/2 1300	234	233	225	219	206	245	140	148	6.2	140	163	6.1	268	51	56
1400	242	232	224	217	206	247	139	147	6.2	140	162	6.1	268	50	55
1500	268	232	225	218	205	245	139	147	6.2	139	162	6.1	267	50	55
1600	235	232	224	217	207	244	140	147	6.2	139	162	6.1	269	51	56
1700	223	234	227	221	208	245	140	147	6.2	141	166	6.1	267	50	55
1800	230	233	226	219	205	245	139	147	6.2	140	163	6.1	268	51	56
1900	229	233	226	220	211	260	138	146	6.2	139	163	6.2	268	51	56
2000	222	233	226	220	208	262	140	148	6.1	140	163	6.1	268	51	55
Shut Down 2100	227	233	228	221	213	289	210	225	0	216	215	0	268	50	55
Restart Test 2245	235	215	224	215	215	186	135	139	6.1	135	154	6.1	268	50	55
2300	236	230	218	214	214	249	140	148	6.1	141	165	6.1	267	51	55
2400	240	235	223	219	219	250	141	150	6.1	141	164	6.1	268	49	55
3/3 0100	239	236	224	220	219	250	140	148	6.1	141	165	6.1	268	50	55
0200	242	236	224	220	220	250	141	149	6.1	141	164	6.1	269	50	55
0300	241	237	224	220	221	250	141	149	6.1	141	165	6.1	269	50	55
0400	238	237	223	219	219	250	141	148	6.1	141	164	6.1	269	50	55
0500	237	236	223	219	221	250	142	149	6.1	142	164	6.1	269	50	55
0600	240	236	223	218	220	250	139	147	6.1	139	163	6.1	269	51	55
0700	242	237	224	219	221	250	139	147	6.1	140	164	6.1	269	51	55
0800	240	236	223	218	219	250	142	150	6.1	142	164	6.1	269	50	55
0900	239	236	225	220	218	250	141	148	6.1	140	163	6.3	267	51	56
1000	237	236	226	221	210	251	142	149	6.1	141	164	6.2	268	50	55

NOTES: 2100 Hrs Shut Down: Cooling Resivor motor & Cooling Tower motor Brunied out. Replaced Both Motors & Restarted Test.
2245 Resumed Test. Tank Temp 265°F Cool. Res. Temp. 135°F

[signature]

QC Form Approval

SHEET ____ OF ____

WYLE LABORATORIES

DATA SHEET

Report No. 57505

Page No. 113

CUSTOMER SOUTHERN CALIFORNIA EDISON

Test Title: MSLB

Specimen 75 HP Submersible Electric Motor

Part No. M/N 7117636003

Job No. 57505

S/N Type CJL6B

Date 3/3/80

TIME	MOTOR WINDING TEMPERATURES (F) Ch. No. 7	8	9	10	11	SEAL COOLING WATER Seal #5	T-in #2	T-out #4	MOTOR COOLING WATER (Volts) Flow	T-in #3	T-out #1	(Volts) Flow	CHAMBER SOLUTION Temp #0	Press #12	SEAL OIL P (psig)
1100	236	236	228	223	216	252	140	148	6.1	140	163	6.3	269	51	56
1200	235	235	226	221	214	256	140	148	6.1	140	163	6.2	269	50	56
1300	236	235	227	222	212	256	140	148	6.1	140	162	6.3	269	50	56
1400	236	236	228	223	216	258	141	148	6.2	141	163	6.2	269	51	56
1500	236	236	228	222	215	256	141	149	6.2	141	163	6.2	269	51	56
1600	236	236	229	225	218	258	141	149	6.2	141	164	6.2	269	52	56
1700	235	236	228	224	215	257	140	148	6.2	140	165	6.1	269	50	56
1800	236	236	230	225	212	258	141	149	6.2	140	163	6.2	268	49	56
1900	236	235	229	224	214	260	141	149	6.3	141	163	6.2	269	49	56
2000	235	236	230	224	212	260	141	149	6.2	141	164	6.3	270	51	56
2100	236	236	232	225	216	259	141	149	6.2	141	164	6.2	271	50	55
2200	237	237	234	227	218	257	141	149	6.2	141	164	6.2	268	50	55
2300	236	237	233	228	221	258	141	149	6.2	141	165	6.2	270	50	55
2400	236	237	234	228	217	257	141	150	6.2	141	165	6.2	271	50	55
0100	235	237	234	228	214	260	141	149	6.2	141	164	6.2	269	49	55
0200	235	237	234	228	217	260	141	150	6.2	141	165	6.2	270	50	55
0300	235	236	234	227	215	260	141	149	6.2	141	164	6.2	268	49	55
0400	234	236	234	228	215	262	143	150	6.2	141	165	6.2	270	50	55
0500	234	236	232	226	215	260	141	148	6.2	141	164	6.2	268	50	55
0600	233	236	232	226	214	259	141	148	6.2	140	164	6.3	269	49	55
0700	234	235	231	225	214	260	140	148	6.2	140	164	6.2	269	50	55
0800	232	235	231	225	214	260	141	148	6.2	141	164	6.2	269	50	55

NOTES:

W 614 B

3/3 QC Form Approval

SHEET ____ OF ____

WYLE LABORATORIES

DATA SHEET

Report No. 57505
Page No. 114

CUSTOMER SOUTHERN CALIFORNIA EDISON
Test Title: MSLB
Specimen 75 HP Submersible
Electric Motor
Part No. M/N 7117636003

Job No. 57505
S/N Type CJL6B
Date 3/4/80

SCE 5 7 8 9 10

TIME	MOTOR WINDING TEMPERATURES (F) Ch. No. 7	8	9	10	11	SEAL COOLING WATER Seal #5	T-in #2	T-out #4	Flow	MOTOR COOLING WATER T-in #3	T-out #1	Flow	CHAMBER SOLUTION Temp #0	Press #12	SEAL OIL P (psig)
0900	233	236	231	225	216	262	141	149	6.1	141	164	6.2	269	50	56
1000	231	233	231	224	215	260	136	145	6.1	136	160	6.3	267	51	56
1100	228	231	228	222	209	260	135	143	6.1	135	159	6.3	268	50	56
1200	228	231	228	222	210	261	135	143	6.1	135	158	6.3	266	49	56
1300	228	231	228	222	206	260	135	142	6.2	135	158	6.2	266	50	56
1400	229	233	229	224	210	261	136	143	6.2	136	161	6.2	266	51	56
1500	228	233	230	223	214	262	136	143	6.1	136	160	6.1	269	49	56
1600	228	232	228	222	212	263	136	143	6.1	136	160	6.1	268	49	56
1700	229	233	229	223	210	262	135	143	6.2	135	159	6.2	268	49	56
1800	229	232	229	221	212	262	134	141	6.2	134	158	6.1	268	50	56
1900	229	232	229	222	211	260	135	142	6.1	135	159	6.3	269	51	56
2000	229	232	229	224	212	258	136	143	6.2	136	159	6.2	266	49	56
2100	229	232	229	222	214	262	135	142	6.2	135	158	6.2	265	50	55
2200	228	232	228	222	213	261	135	142	6.2	135	159	6.2	266	49	56
2300	228	232	229	224	210	262	135	142	6.2	135	159	6.2	268	50	55
2400	229	232	230	223	213	262	135	142	6.2	136	159	6.2	268	50	55
0100	229	232	230	228	211	260	135	141	6.2	135	159	6.2	267	50	55
0200	229	233	230	223	213	261	135	142	6.2	135	159	6.2	267	50	55
0300	229	232	229	222	213	260	135	142	6.2	135	159	6.2	267	50	55
0400	228	233	228	223	212	260	135	142	6.2	135	159	6.2	267	49	55
0500	228	232	228	221	206	260	136	142	6.2	136	159	6.2	267	49	55
0600	228	232	227	219	210	260	135	141	6.2	135	158	6.2	266	49	55

NOTES:

3/4

QC Form Approval

SHEET ____ OF ____

WYLE LABORATORIES

DATA SHEET

Report No. 57505

Page No. - 115

CUSTOMER SOUTHERN CALIFORNIA EDISON

Test Title: MSLB

Specimen 75 HP Submersible

Electric Motor

Part No. M/N 7117636003

Job No. 57505

S/N Type CJL6B

Date 3/5/82

S No. 5 7 8 9 10

TIME	MOTOR WINDING TEMPERATURES (F) Ch. No. 7	8	9	10	11	Seal #5	SEAL COOLING WATER T-in #2	T-out #4	Flow	MOTOR COOLING WATER T-in #3	T-out #1	Flow	CHAMBER SOLUTION Temp #0	Press #12	SEAL OIL P (psig)
0700	227	232	227	220	207	261	135	141	6.2	135	159	6.2	266	49	55
0800	227	232	229	221	213	261	135	142	6.2	135	159	6.2	267	49	55
0900	228	232	228	221	208	262	136	143	6.2	136	159	6.2	267	50	55
1000	228	232	227	220	208	261	136	142	6.2	136	159	6.2	267	51	56
1100	227	232	227	220	207	261	136	143	6.2	136	159	6.2	267	51	56
1200	229	233	228	221	209	262	137	144	6.2	137	161	6.2	268	50	56
1300	230	233	228	221	212	257	136	143	6.2	136	161	6.2	267	50	56
1900	228	233	227	220	210	258	136	142	6.2	136	159	6.2	267	49	56
1500	228	232	228	222	208	256	136	143	6.2	136	159	6.2	267	49	56
1600	228	231	226	218	206	260	135	142	6.2	135	159	6.2	268	51	56
1700	227	231	226	218	209	259	135	141	6.2	134	157	6.2	267	52	56
1800	227	230	225	219	205	259	135	142	6.1	135	156	6.1	266	50	56
1900	227	231	225	218	207	262	135	142	6.2	135	157	6.2	268	51	56
2000	227	230	225	217	207	262	134	141	6.1	134	157	6.1	267	50	56
2100	227	230	224	216	207	263	134	141	6.1	134	156	6.1	266	50	55
2200	228	231	226	218	208	256	136	143	6.1	136	158	6.1	267	50	55
2300	228	232	226	218	209	266	137	143	6.1	136	158	6.1	267	50	55
2400	224	225	211	205	200	231	136	140	6.1	135	152	6.1	226	29	34
0100	223	224	210	205	201	235	135	140	6.2	135	152	6.2	225	29	34
0200	223	224	210	205	200	236	135	140	6.2	135	152	6.2	227	29	34
0300	223	224	210	204	199	234	135	140	6.2	135	151	6.2	226	28	34
0400	223	224	210	205	200	235	135	140	6.1	135	153	6.1	227	29	34

NOTES: 2315: Lower TANK Temp To 225 °F Also Lower TANK Press To 29 psi. & O.C Press To 34 psi. 131 Hrs. IN TEST.

2350: TANK Temp. Reduce To 225 °F TANK Press 29 psi O.C Press 34 psi.

QC Form Approval

SHEET ___ OF ___

WYLE LABORATORIES

DATA SHEET

Report No. 57505
Page No. 116

CUSTOMER SOUTHERN CALIFORNIA EDISON
Test Title: MSLB
Specimen 75 HP Submersible
Part No. M/N 7117636003 Electric Motor
Job No. 57505
S/N Type CJL6B
Date 2/6/80

SCE 5 7 8 9 10

TIME	MOTOR WINDING TEMPERATURES (F) Ch. No. 7	8	9	10	11	SEAL COOLING WATER Seal #5	T-in #2	T-out #4	Flow	MOTOR COOLING WATER T-in #3	T-out #1	Flow	CHAMBER SOLUTION Temp #0	Press #12	SEAL OIL P (psig)
0500	222	224	209	203	198	234	135	139	6.1	135	153	6.1	226	29	34
0600	222	223	208	203	199	234	135	139	6.1	135	151	6.1	226	29	34
0700	222	223	208	202	199	233	135	139	6.1	135	151	6.1	226	29	34
0800	222	223	208	202	201	233	135	139	6.2	135	151	6.2	226	30	34
0900	222	223	208	203	201	236	135	140	6.2	135	152	6.2	228	31	35
1000	225	225	210	205	202	236	138	143	6.2	138	154	6.2	227	30	35
1100	224	225	210	206	202	235	138	142	6.2	138	154	6.2	230	30	35
1200	223	225	211	205	201	238	137	142	6.2	137	154	6.2	229	30	35
1300	223	225	210	204	202	235	136	141	6.2	136	154	6.2	228	30	35
1400	223	225	210	204	199	234	137	141	6.2	137	153	6.2	228	30	35
1500	222	225	211	205	198	233	138	143	6.2	138	154	6.2	230	29	35
1600	223	225	211	205	201	237	138	143	6.2	138	154	6.2	229	30	36
1700	224	225	211	205	202	234	138	143	6.2	138	153	6.2	228	29	36
1800	223	225	211	205	203	225	138	142	6.2	137	154	6.2	228	29	36
1900	223	225	212	206	203	224	138	143	6.2	138	154	6.2	227	29	36
2000	224	225	212	206	204	226	138	143	6.2	138	154	6.2	229	30	36
2100	224	225	211	205	203	226	137	142	6.2	137	154	6.2	228	29	34
2200	224	225	211	204	203	228	138	143	6.2	138	154	6.2	228	29	34
2300	224	225	210	202	201	227	139	143	6.2	139	154	6.2	226	29	34
2400	225	225	210	203	201	226	138	143	6.2	138	154	6.2	227	29	34
0100	224	225	210	203	202	227	138	143	6.2	138	154	6.2	226	29	34
0300	224	224	210	204	203	226	138	143	6.2	138	154	6.2	227	29	34

NOTES:

SHEET ____ OF ____

QC Form Approval

WYLE LABORATORIES

DATA SHEET

Report No. 57505
Page No. 117

CUSTOMER SOUTHERN CALIFORNIA EDISON
Test Title: MSLB
Specimen 75 HP Submersible
Electric Motor
Part No. M/N 7117636003
Job No. 57505
S/N Type CJL6B
Date 3/7/80

S[illegible]. 5 7 8 9 10

TIME	MOTOR WINDING TEMPERATURES (F) Ch. No. 7	8	9	10	11	Seal #5	SEAL COOLING WATER T-in #2	T-out #4	Flow	MOTOR COOLING WATER T-in #3	T-out #1	Flow	CHAMBER SOLUTION Temp #0	Press #12	SEAL OIL P (psig)
0300	224	224	210	203	202	227	138	143	6.2	138	154	6.2	225	29	34
0400	224	224	210	202	202	228	138	143	6.2	138	154	6.2	227	29	34
0500	224	223	210	203	200	228	138	142	6.2	138	154	6.2	226	29	34
0600	223	223	209	203	202	230	138	142	6.2	138	154	6.2	227	29	34
0700	223	223	210	203	200	227	137	142	6.2	137	154	6.2	226	29	34
0800	222	223	210	203	202	227	137	142	6.2	137	154	6.2	225	29	34
0900	223	223	211	205	202	228	138	143	6.2	138	155	6.2	227	31	36
1000	223	223	212	205	202	230	138	143	6.2	138	155	6.2	229	30	36
1100	223	223	212	206	202	230	138	142	6.2	138	155	6.2	228	29	35
1200	223	222	213	207	203	232	139	144	6.2	139	155	6.2	230	30	35
1300	223	221	214	207	202	230	139	143	6.2	139	155	6.2	227	30	35
1400	223	221	214	208	203	230	139	143	6.2	139	155	6.2	229	29	35
1500	223	221	215	209	204	230	139	143	6.2	139	155	6.2	227	30	35
1600	226	220	215	208	207	231	138	142	6.2	138	155	6.2	227	29	35
1700	223	220	216	209	205	230	138	143	6.2	138	155	6.2	228	30	36
1800	223	219	216	209	206	229	137	142	6.2	138	154	6.2	226	29	36
1900	221	219	215	208	207	230	138	143	6.2	138	155	6.2	227	31	36
2000	222	219	216	209	207	229	138	143	6.2	138	155	6.2	226	30	36
2100	222	219	216	209	206	230	139	143	6.2	139	155	6.1	227	29	34
2200	221	219	215	208	205	230	137	142	6.2	138	155	6.1	226	30	34
2300	221	218	214	207	202	230	138	143	6.2	139	155	6.1	227	29	34
2400	221	218	214	208	203	231	138	143	6.2	138	156	6.1	228	29	34

NOTES:

QC Form Approval

SHEET ____ OF ____

WYLE LABORATORIES

DATA SHEET

Report No. 57505
Page No. 118

CUSTOMER SOUTHERN CALIFORNIA EDISON
Test Title: MSLB
Specimen 75 HP Submersible
Electric Motor
Part No. M/N 7117636003

Job No. 57505
S/N Type CJL6B
Date 3/8/60

SCE . 5 7 8 9 10

TIME	MOTOR WINDING TEMPERATURES (F) Ch. No. 7	8	9	10	11	SEAL COOLING WATER Seal #5	T-in #2	T-out #4	Flow	MOTOR COOLING WATER T-in #3	T-out #1	Flow	CHAMBER SOLUTION Temp #0	Press #12	SEAL OIL P (psig)
0100	222	217	212	207	204	230	138	142	6.2	138	155	6.1	226	30	34
0200	222	217	212	206	203	232	138	142	6.2	138	155	6.1	228	30	35
0300	222	216	211	206	202	230	138	142	6.2	138	155	6.1	226	30	35
0400	220	215	210	206	203	230	138	142	6.2	138	155	6.1	227	30	35
0500	221	215	209	205	200	230	138	142	6.2	138	155	6.1	228	30	35
0600	220	214	209	204	200	229	137	142	6.2	138	155	6.1	226	30	35
0700	219	215	207	204	200	229	138	142	6.2	138	155	6.1	227	30	35
0800	219	214	206	202	200	229	137	142	6.2	137	155	6.1	226	30	35
0900	219	214	207	203	201	229	138	142	6.2	138	155	6.2	225	30	35
1000	219	213	265	201	199	229	137	142	6.2	137	155	6.2	227	30	35
1100	221	217	209	206	205	235	160	165		160	172		228		36
1200	TEST	SHUT	DOWN		FOR	ELECTRICAL		REPAIRS							36
1230	208	205	200	195	191	226	139	143	6.2	139	154	6.2	226	31	36
1300	215	211	205	261	197	229	138	142	6.2	138	156	6.2	227	30	36
1400	217	213	208	205	266	218	138	143	6.1	139	156	6.1	228	30	36
1500	217	219	208	209	201	215	139	143	6.1	139	157	6.1	230	29	36
1600	218	214	209	204	202	215	139	144	6.1	139	156	6.1	226	28	35
1700	218	213	208	202	201	215	139	144	6.1	139	155	6.1	228	29	35
1800	217	213	207	202	200	215	138	143	6.1	138	156	6.1	229	30	35
1900	216	212	205	202	199	214	139	144	6.1	139	156	6.1	228	29	35
2000	215	211	204	201	199	214	139	144	6.1	139	156	6.1	227	29	35
2100	215	211	204	201	199	213	139	144	6.1	139	156	6.1	228	29	35

NOTES:

W 6148

QC Form Approval

SHEET ___ OF ___

WYLE LABORATORIES

DATA SHEET

Report No. 57505
Page No. 119

CUSTOMER SOUTHERN CALIFORNIA EDISON
Test Title: MSLB
Specimen 75 HP Submersible 57505
Electric Motor Type (JL6B
Part No. M/N 7117636003 S/N
Job No. Date 3/9/90

SC 5 7 8 9 10

TIME	MOTOR WINDING TEMPERATURES (F) Ch. No. 7	8	9	10	11	SEAL COOLING WATER Seal #5	T-in #2	T-out #4	Flow	MOTOR COOLING WATER T-in #3	T-out #1	Flow	CHAMBER SOLUTION Temp #0	Press #12	SEAL OIL P (psig)
2200	216	212	202	201	199	211	139	143	6.1	139	155	6.1	225	30	35
2300	214	211	200	199	198	212	138	143	6.1	139	156	6.1	226	30	35
2400	215	210	199	198	198	212	138	143	6.1	138	156	6.1	227	30	35
0100	214	209	198	197	196	212	139	144	6.1	140	156	6.1	227	30	35
0200	210	208	196	197	197	209	139	143	6.1	139	155	6.1	225	30	35
0300	212	207	197	196	196	211	139	143	6.1	139	155	6.1	225	29	35
0400	213	207	196	195	196	210	139	143	6.1	139	155	6.1	227	29	35
0500	212	206	195	196	196	210	139	143	6.1	139	155	6.1	227	29	35
0600	210	205	196	195	196	212	139	143	6.1	139	155	6.1	226	29	35
0700	210	205	195	195	195	214	139	143	6.1	139	155	6.1	227	29	35
0800	208	204	196	195	195	214	139	143	6.1	138	155	6.1	225	29	35
0900	211	204	196	195	195	212	140	144	6.2	139	155	6.2	227	31	36
1000	207	203	196	195	195	211	139	143	6.2	139	156	6.2	228	30	36
1100	210	202	196	195	194	211	139	143	6.2	139	154	6.2	225	30	36
1200	209	202	195	195	194	210	139	144	6.2	139	155	6.2	227	29	36
1300	205	201	195	195	194	211	139	143	6.2	139	155	6.2	228	30	36
1400	209	200	196	196	195	210	139	143	6.2	138	155	6.2	229	29	36
1500	206	200	195	195	195	211	139	143	6.2	139	156	6.2	229	30	36
1600	207	200	195	195	195	212	139	144	6.2	139	155	6.2	228	29	36
1700	207	200	195	195	195	211	139	144	6.2	139	155	6.2	227	29	35
1800	207	199	195	194	196	212	139	144	6.2	139	155	6.2	228	29	35

NOTES: 1857 SHUTDOWN TEST

QC Form Approval

SHEET ____ OF ____

APPENDIX C

WYLE LABORATORIES TEST PROCEDURE
NO. 3599, REVISION H, 26 JUNE 1980

(22 Pages)

TEST PROCEDURE NO. 3599

DATE: 23 March 1977

Norco, California

NE14NA

REVISION H
26 June 1980

REVISION A
18 April 1977

REVISION B
21 July 1977

REVISION C
18 November 1977

REVISION D
6 February 1978

REVISION E
3 May 1978

REVISION F
30 June 1978

REVISION G
14 February 1980

TEST PROCEDURE

FOR

QUALIFICATION TESTING

OF A

NUCLEAR SAFETY RELATED (CLASS 1E) 75 HP SUBMERSIBLE ELECTRIC MOTOR

FOR

SOUTHERN CALIFORNIA EDISON COMPANY SAN ONOFRE NUCLEAR GENERATING STATION UNIT 1

APPROVED BY: [signature]
FOR: SCE

APPROVED BY: [signature]
FOR: SCE

APPROVED BY: [signature] 4/18/77
FOR: SCE

APPROVED BY: [signature]
FOR: Wyle Laboratories

APPROVED BY: [signature]
FOR: Wyle Laboratories

PREPARED BY: [signature]
WYLE LABORATORIES

REVISIONS

REV. NO.	DATE	PAGES AFFECTED	BY	APPR.	DESCRIPTION OF CHANGES
A	4-18-77	Pages 17 - 19 deleted 2,3, 5 - 11; 13, 14, 17, 18 (some pages have been renumbered: above are current page numbers.	[signature]	[signature] 4/19	Pages revised to conform to SCE requirements.
B	7-21-77	Pages 3-11, 12.	[signature] 7/22	[signature] 7-25	Revised to conform to SCE requirements.
C	11-13-77	Pages 6, 8-10, 14	[signature] 11/18	[signature] 11-21	Revised to conform to new SCE requirements.
D	2-6-78	Pages 5 thru 11	T.T.	[signature]	Pages revised to conform to SCE requirements.

COPYRIGHT BY WYLE LABORATORIES. THE RIGHT TO REPRODUCE, COPY, EXHIBIT, OR OTHERWISE UTILIZE ANY OF THE MATERIAL CONTAINED HEREIN WITHOUT THE EXPRESS PRIOR PERMISSION OF WYLE LABORATORIES IS PROHIBITED. THE ACCEPTANCE OF A PURCHASE ORDER IN CONNECTION WITH THE MATERIAL CONTAINED HEREIN SHALL BE EQUIVALENT TO EXPRESS PRIOR PERMISSION.

REVISIONS (continued)

Rev. No.	Date	Pages Affected	APPROVALS By	APPROVALS Wyle QC	SCE	Description of Changes
E	5-3-78	5, 6 thru 11	T.T.	5-4-78		
F	6-30-78	9, 10, 11		6/78		Revised per SCE requirements
G	2-14-80	9 thru 12 13 thru 17	wf	2/80		Revised per SCE requirements. Fig. 3 (P.12) added; 13-17 now 13-18.
H	6-26-80	7 thru 14 7 thru 18	wf	6/80		Revised per SCE requirements. Par. 7.0 added. Renumbered: 7 thru 22

CONTENTS

		Page Number
CONTENTS		2
1.0	PURPOSE	3
2.0	REFERENCES	3
3.0	DESCRIPTION OF TEST SPECIMEN	3
4.0	PROGRAM REQUIREMENTS	3
5.0	TEST CONDITIONS AND TEST EQUIPMENT	5
6.0	REQUIREMENTS AND PROCEDURES	5
6.1	Receiving Inspection	5
6.2	Functional Test	6
6.3	Trial Submersion Test	6
6.4	Nuclear Radiation	7
6.5	Receiving Inspection	7
6.6	Functional Test	8
6.7	Aging Simulation	8
6.8	Vibration Aging	11 H
6.9	Functional Test	11
6.10	Design Basis Event	11
6.11	Functional Test	13
7.0	REFERENCES	14
FIGURE 1	TEST PROFILE MSB SIMULATION	15
FIGURE 2	MSB SIMULATION - TEST SETUP	16
FIGURE 3	MOTOR POWER CONNECTION/VENT LINE DETAILS	17
TEST DATA SHEETS (Samples)		18 - 21
NOTICE OF DEVIATION (Sample)		22

1.0 PURPOSE

The purpose of this procedure is to present the methods to be used in the performance of a test program. The test program will be to type test a 460-volt submersible motor in accordance with the requirements of IEEE Standard 323-1974 and IEEE 334-1974. It is assumed that the customer has verified that the levels contained herein are adequate for his specific requirements and include the margins as required.

2.0 REFERENCES A

2.1 Southern California Edison Purchase Order No. G8200023.

2.2 Southern California Edison Specification No. 82-0365.

3.0 DESCRIPTION OF TEST SPECIMEN

The test specimen is a 460-volt, 75 HP electric motor of approximate size 20 inches in diameter by 36 inches long, horizontally mounted.

4.0 PROGRAM REQUIREMENTS

4.1 Test Program

The test program consists of subjecting the test specimen to a series of type tests as described in Paragraph 6.0 of this test procedure to demonstrate its ability to maintain its safety function. B

4.2 Witnessing Tests

Southern California Edison (SCE) will be notified 24 hours in advance of each phase of testing so that an SCE representative may witness any or all portions of testing.

4.3 Test Failures

In the event of any test specimen failures the responsible SCE representative will be notified. A notice of Deviation (see sample, Page 22) describing the test failure and the test specimen disposition will be prepared and submitted within 48 hours. B D

4.4 Test Report

Ten copies of a certification test report will be issued subsequent to completion of testing. This report will be signed by a registered professional engineer and will summarize details and recommendations concerning deficiencies and repairs, photographs of test setups, failures, etc. The report will also contain a list of test equipment used, calibrations, and instrumentation log sheets.

4.5 In the event of conflict between this and any other document, this approved test procedure will govern.

5.0 TEST CONDITIONS AND TEST EQUIPMENT

5.1 Ambient Conditions

Unless otherwise specified herein, all tests required by the specification shall be performed at an atmospheric pressure of 29.92 ± 1.0 inches of mercury absolute, a temperature of 70 ± 30F, and a relative humidity of approximately 50 percent.

5.2 Acceptance Criteria

Catastrophic failure of the motor will constitute unacceptable performance.

Fluctuations in test parameters may indicate a motor malfunction. Test parameters will be continually monitored and abnormal long term trends or short term changes in the parameters of motor load, motor thermocouple readings, or cooling water exit and entrance comparative temperatures will require disposition by an SCE representative. B

5.3 Test Equipment

All reference standards utilized in the Wyle Laboratories calibration system are supported by certificates, reports, or data sheets attesting to the date, accuracy, and conditions under which the results furnished were obtained. All subordinate standards, and measuring and test equipment are supported by like data when such information is essential to achieve the accuracy control required by the subject contract.

Certificates and reports of all calibrations performed are retained in the Wyle Laboratories Quality Control files and are available for inspection upon request by the customer or government representative.

The equipment listed on the sample equipment list (Page 19), or equivalent equipment, will be used in the performance of the test program. Actual equipment used will be recorded on this type data sheet. D A

6.0 REQUIREMENTS AND PROCEDURES

The type test will consist of the following sequence:

1. Receiving Inspection
2. Functional Test
3. Trial Submersion Test E
4. Nuclear Radiation
5. Functional Test
6. Aging Simulation
7. Functional Test A
8. Design Basis Event
9. Functional Test B

6.1 Receiving Inspection

Upon receipt at Wyle Laboratories, and prior to any testing, the specimen will be visually examined for evidence of damage which may have been incurred in shipping. Results of this examination and specimen identification information will be recorded on a receiving inspection data sheet (see sample, Page 18). D

6.2 Functional Test

A megger test will be conducted on the motor; results will be recorded. The functional test will consist of installing the motor in the test chamber and attaching a load to the motor output shaft which will draw 70 HP. Cooling water will be supplied to the motor at 135F maximum and a maximum of five gallons per minute. Cooling water will also be supplied to one passage of the motor shaft seal at five gallons per minute and a temperature of 135F maximum. A dead head no-flow oil system will impose a static pressure of approximately 10 psig to the seal oil reservoir. The motor will then be operated for two hours at full load and will be monitored on a polyphase wattmeter to determine any degradation in capability. The six motor thermocouples, as well as the motor cooling water inlet and outlet temperatures, and the seal cooling water inlet and outlet temperatures will be monitored during this test to assess the motor characteristics.

6.3 Trial Submersion Test

A trial submersion test will be conducted to check the motor integrity before proceeding with the remainder of the qualification tests. The test will consist of installing the motor in the test setup shown in Figure 2, and operating the motor at full load for 48 hours while submerged in deionized water. The test chamber will be pressurized 49.7 psig and inlet motor and seal cooling water of maximum 135F and 5 gpm will be maintained. The seal oil reservoir will be pressurized to 3.01 psig maximum, plus the chamber pressure. A polyphase wattmeter will be utilized to monitor motor load and the six motor thermocouples and four cooling water thermocouples will be monitored. At the end of the 48 hours, the test chamber will have the pressure removed and be drained, and inspected.

6.4 Nuclear Irradiation H

To accomplish this phase of the qualification program, the non-metallic components were analyzed, via a literature search, to determine their irradiation resistance. The object was, of course, to exempt those components which have a far greater irradiation resistance than the 4 megarad (gamma air equivalent dose) requirement would impose.

The motor winding insulation and leads were the only components qualified by exemption. In this regard, excellent data are available from the manufacturer (Louis Allis). In the Louis Allis report referenced in Paragraph 8.4, a complete aging study was performed on the insulation and lead materials in the form of multiple motorette samples (30 each). The samples were subjected to simultaneous irradiation (cobalt 60 gamma) and elevated temperature for a total of over 2100 hours. The temperature was 170C and the total dose was 1.1×10^9 rads. Post irradiation electrical tests showed no failures in the entire sample.

Since the irradiation level was 275 times the requirement, and synergistic effects were also included in the test program, the data were deemed sufficient to permit (standard Wyle procedure) exemption of the motor windings and leads from the necessity of irradiation.

All the other non-metallic components, including gaskets, O-rings, rotating seal components (including the lube oil), and the bearings (pre-greased) shall be subjected to the required dose of 4 megarads of gamma (cobalt-60) irradiation (air equivalent dose). An outside laboratory shall be chosen for this test.

6.5 Receiving Inspection

Upon return to Wyle Laboratories, and prior to the next test, the specimen shall be visually examined for evidence of damage which may have been incurred in shipping. Results of this examination and specimen identification will be recorded on a receiving inspection data sheet. D

6.6 Functional Test

Prior to the next test, the functional test described in Paragraph 6.2 of this test procedure shall be performed. E

6.7 Aging Simulation H

Again, as per Paragraph 6.4, and consistent with Wyle standard procedures, the motor components have been analyzed via a literature study to determine their thermal aging resistance for the purpose of exempting materials from thermal aging where possible. Again, the only components exempted have been the motor winding coils and the coil leads.

The exemption procedure has shown, on the basis of a substantial amount of data generated by Louis Allis (Reference 7.4), that the required thermal aging, in this instance, is negligible with regard to the material's capabilities.

The exemption process first required calculation of the amount of aging time at an accelerated aging temperature of 220C. The calculated times were then compared to the available thermal aging data for these materials.

The specific exemption process is described in detail as follows:

Step A.

Method:

From IEEE 117(1974), "Test Procedure for Evaluation of Systems of Insulating Materials for Random Wound Electric Machinery", the 10C rule method of calculating the aging time at an accelerated aging temperature was chosen. The method states that for accelerating the aging process the specimen's normal life is reduced by a one-half factor for each 10 degree difference (rise) in accelerated temperature versus the normal temperature. This leads to the equation:

6.7 Aging Simulation (continued) H

$$t_a = t_n/2 \text{ exponent } ((T_a - T_n)/10)$$

Where: t_a = accelerated time
T_a = accelerated temperature (C)
t_n = normal time
T_n = normal temperature (C)

Step B: Calculations

The normal service environment (non-operating) condition is 120F (49C). The RHR system is utilized a maximum of six weeks per year during the life of the plant. There are two motors in this RHR system with only one generally utilized during the shutdown period. For conservatism, it will be considered that the same motor is always used, this providing additional margin in the aging simulation. The peak temperature in the windings during operation at 120F is assumed to be 232F plus 15F for margin yields 247F.

Then:

(35-year assumed life) (46 wks/yr) = 1610 weeks (30.96 years)

The normal winding temperature for this duration is assumed to be 120F (49C). The motor aging temperature is chosen as 428F (220C). The difference is 171C, so the aging time at this temperature would be:

$$\frac{30.96 \text{ yr} \quad \frac{365 \text{ days}}{\text{year}} \quad \frac{24 \text{ hours}}{\text{day}}}{2 \text{ exponent } \frac{171C}{10C}} = 2 \text{ hours}$$

A. (35-year assumed life) (6 wks/yr) = 210 weeks (4.04 years)

The average normal winding temperature for this duration, as above, is assumed to be 247F (119C). 220C will be utilized as the allowable aging temperature. The difference is 101C, so the aging time at this temperature would be:

$$\frac{4.04 \text{ yr} \quad \frac{365 \text{ days}}{\text{year}} \quad \frac{24 \text{ hours}}{\text{day}}}{2 \text{ exponent } \frac{101C}{10C}} = 33 \text{ hours}$$

6.7 Aging Simulation (continued) H

Step C: Comparison

From Reference 7.4 data for these materials (motorettes) has been obtained in cyclic form including humidity and vibration exposure between each cycle. Temperature steps from 220C to 270C at duration times from 32 to one-day respectively were employed.

In addition, isothermal aging was performed at various temperatures from 220C to 270C for times varying from 17544 to 4660 hours respectively.

No conclusive materials life was established in the referenced study since no specimen failures were detected with the post-aging electrical tests (per IEEE 117-1974).

Since these data (17,544 hours at 220C) far exceed the requirement of 35 total hours at 220C, this was deemed adequate to support the conclusion that 35 hours of aging is both negligible and unnecessary. The motor coils shall not be thermally aged.

For the remaining components (rotating seal non-metallics, gaskets, and end bell O-rings) no attempt to exempt them from aging was made, rather the 10C rule was again used, with the 120F normal temperature and an assumed operating temperature of a linear midpoint between the cooling water (140F) and the average assumed coil temperature (213F) plus 10F for margin, or 185F (85C). The desired qualification life is five years for these components, and the accelerated temperature was chosen as 320F (150C).

(5-year life 46 weeks/year at 120F = 4.4 years)

$$\frac{4.4 \times 365 \times 24}{2 \exp ((150-49)/10)} = 35 \text{ hours}$$

(5-year life 6 weeks/year at 185F = 0.6 years)

$$\frac{0.6 \times 365 \times 24}{2 \exp ((150-85)/10)} = 58 \text{ hours}$$

6.7 Aging Simulation (continued) H

Since IEEE 323 recommends 100 hours minimum the components shall be aged 100 hours (minimum) at 302F prior to accident testing.

As additional information, if the O-ring and gasket material (silicone rubber) were analyzed employing somewhat more modern methods, namely, the Ahrenius equation, with an activation energy material constant of 1.73, only one hour would be calculated for aging at 302F.

6.8 Vibration Aging

The aging to simulate startups and other running conditions consists of vibrating the motor at a 1.5g acceleration for one hour A
at 60 Hz. The motor will be bolted to a vibration table in its normal mounting manner and operated in a no-load condition during the one hour of vibration. The vibration input will be in a vertical direction with the motor mounted in its normal horizontal C
position. Cooling water will be supplied to the motor from a city water supply. The thermocouples will not be monitored during this phase of the test.

6.9 Functional Test

Functional test shall be performed as described in Paragraph 6.2. B
In addition, a high potential test shall be performed a 1279 volts G
alternating current for one minute between each of the windings and the motor case.

6.10 Design Basis Event (MSB)

6.10.1 The motor/impeller assembly will be installed in the test setup as G
illustrated in Figure 3. A conductivity cell or flat switch will be B
installed in the junction box of the motor to determine if water enters this area. A 5 psig pressure will be applied to the internal area of the motor through the junction box cable port and locked off and held for four hours. If there is any leakoff, the point of leakage shall be determined and resolved for disposition with the SCE representative. The motor will be insulated with a two-inch layer of
Pittsburgh Corning Foamglass or equivalent (ASTML-552-66) by an SCE E
representative. The motor will be subjected to the temperature and pressure profile as found in Figure 1.

6.10.2 The first phase of the test, as illustrated in Figure 1, is to submerge the motor in water (2.46% borated solution, buffered with TSP -.27% to a pH of 7.5). The motor will not be operating during this phase of the test and will not have cooling water conducted to it. Once the motor is submerged, the surrounding water will be heated to 265F and a chamber pressure of 61.2 psig will be maintained. The seal oil pressure will be raised to 5.0 psig plus the chamber pressure. When the surrounding water temperature reaches the required temperature, it will be maintained for one 33-minute dwell. A G G E D G E

Note that, as mentioned, the motor shall not be operating during the dwell; however, it shall be operating during the heat-up ramps in this as well as the next phase. Normal motor and seal cooling and lubrication systems shall be employed during heat-up ramps. G

6.10.3 The second phase of the test will continue where the first phase ends. The surrounding water will be heated until a temperature of 265F and a pressure of 49.7 psig is obtained. The seal oil reservoir pressure will follow the chamber pressure, plus 5.0 psig. When the 265F temperature is obtained, it will be maintained for 131 hours. The motor will be started, loaded with the shaft-mounted impeller, and operated at full load for the 131 hours. The motor will have cooling water circulated to it at 5 gpm maximum and 135F minimum temperature. The motor seal will have water circulated to it at 5 gpm maximum and 135F minimum temperature. A G G G C G G E E

6.10.4 The third phase of the test will consist of reducing the surrounding water temperature to 225F and maintaining a chamber pressure of 28.8 psig. The seal oil reservoir will follow the chamber pressure, plus 5.0 psig. The duration of this phase will be 660 hours, including the cooldown time to descend in temperature from Phase II. The motor will be operated at full impeller load with cooling water circulated to it at 5 gpm maximum and 135 +10, -0F temperature. The motor seal will have water circulated to it at 5 gpm maximum and 135 _10, -0F temperature. A E C G G

At the end of this phase of testing, the chamber will be drained and opened and the motor will be visually examined. A megger test will be conducted on the motor. A

6.10.4 (Continued)

When the motor is loaded, the load will be monitored utilizing a polyphase wattmeter monitoring the electrical input to the test motor. The six internal motor thermocouples, the seal thermocouple, the inlet and outlet motor, and seal cooling water temperatures, and the surrounding borated water temperature will be monitored with a point recorder. The conductivity cell or equivalent will be periodically monitored and the data will be recorded on a data sheet. C

Note that prior to submerging the motor, 384 ml of oil (minimum) shall be purged out the top port of the seal. G

6.11 Functional Test

A megger and high-potential test shall be conducted on the motor following the DBE test. Results shall be logged.

7.0 REFERENCES H

7.1 IEEE 323(1974).

7.2 IEEE 334(1974).

7.3 IEEE 117(1974).

7.4 Louis Allis Test Report No. M+M Report No. 277B*, dated 15 October 1979, "Insulation System Evaluation - 600V - Safety Class 1E for Service to $1x10^9$ Rads, Ramdom Wound Motorettes". In addition, two letters have been transmitted to SCE from Louis Allis verifying that the coil and lead insulation materials tested in the above report were identical to those employed in the subject motor. These shall be made available by SCE for audit.

* Note: Louis Allis Proprietary

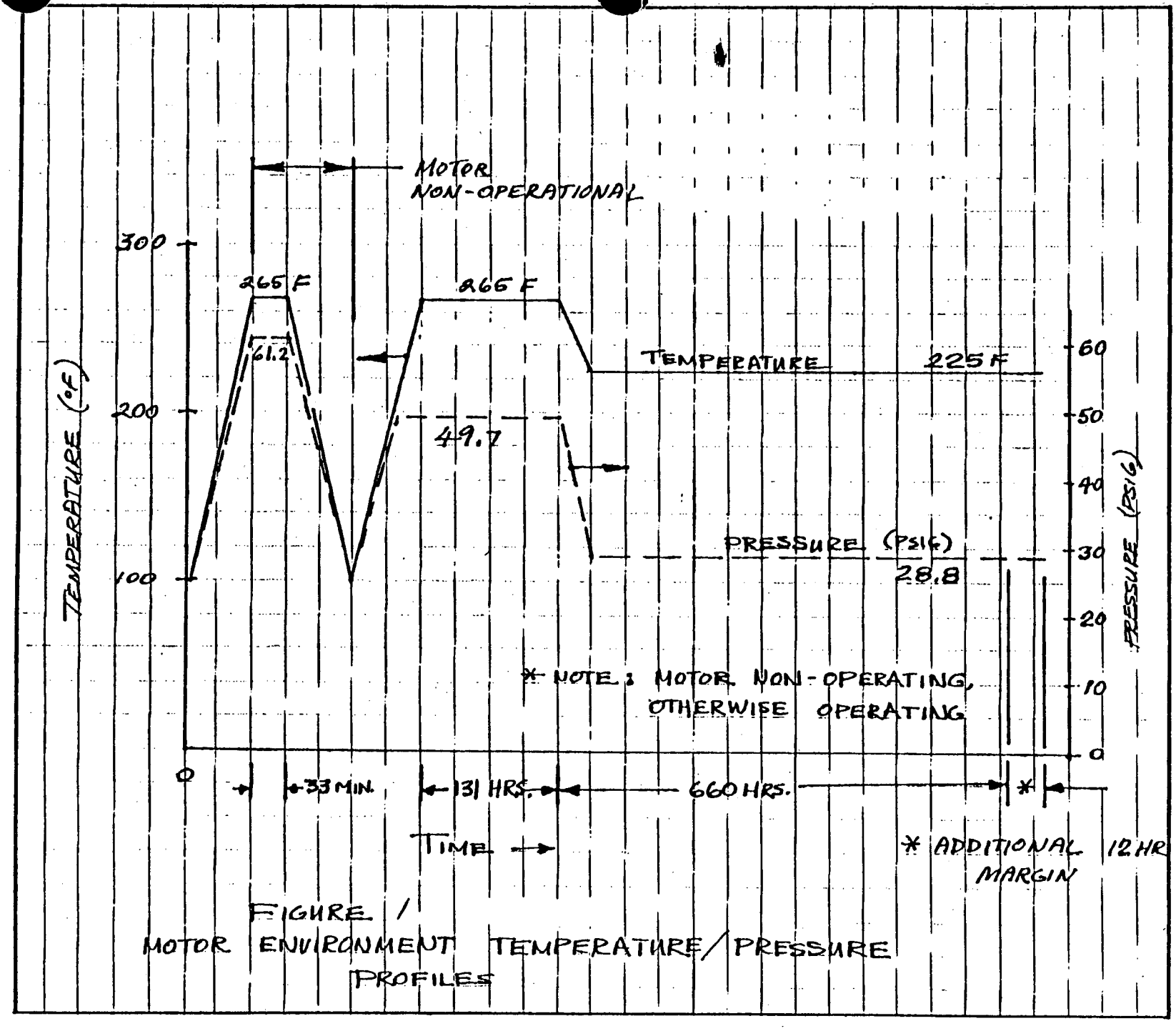

FIGURE 1
MOTOR ENVIRONMENT TEMPERATURE/PRESSURE PROFILES

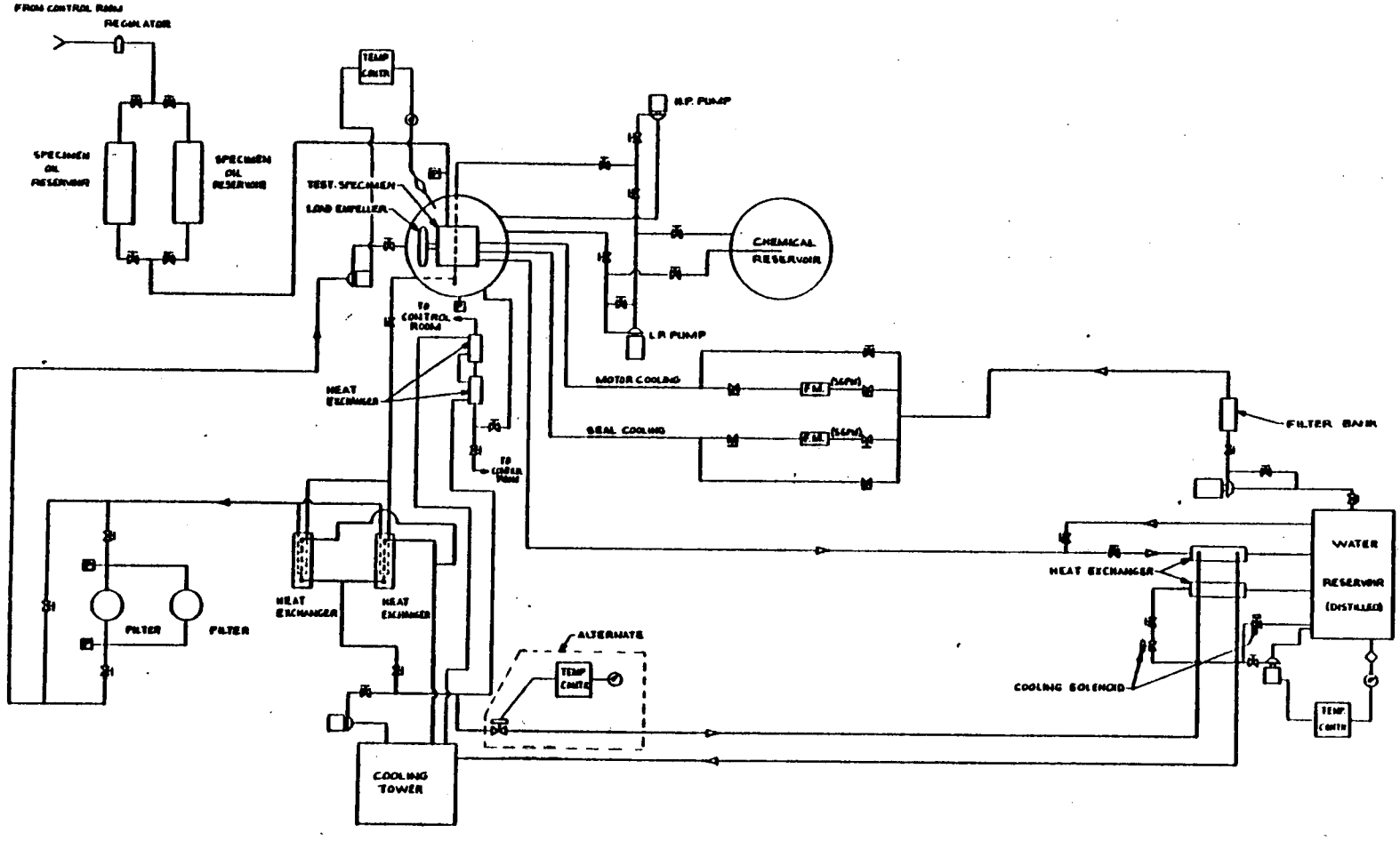

FIGURE 2

MSB SIMULATION - SYSTEM SCHEMATIC

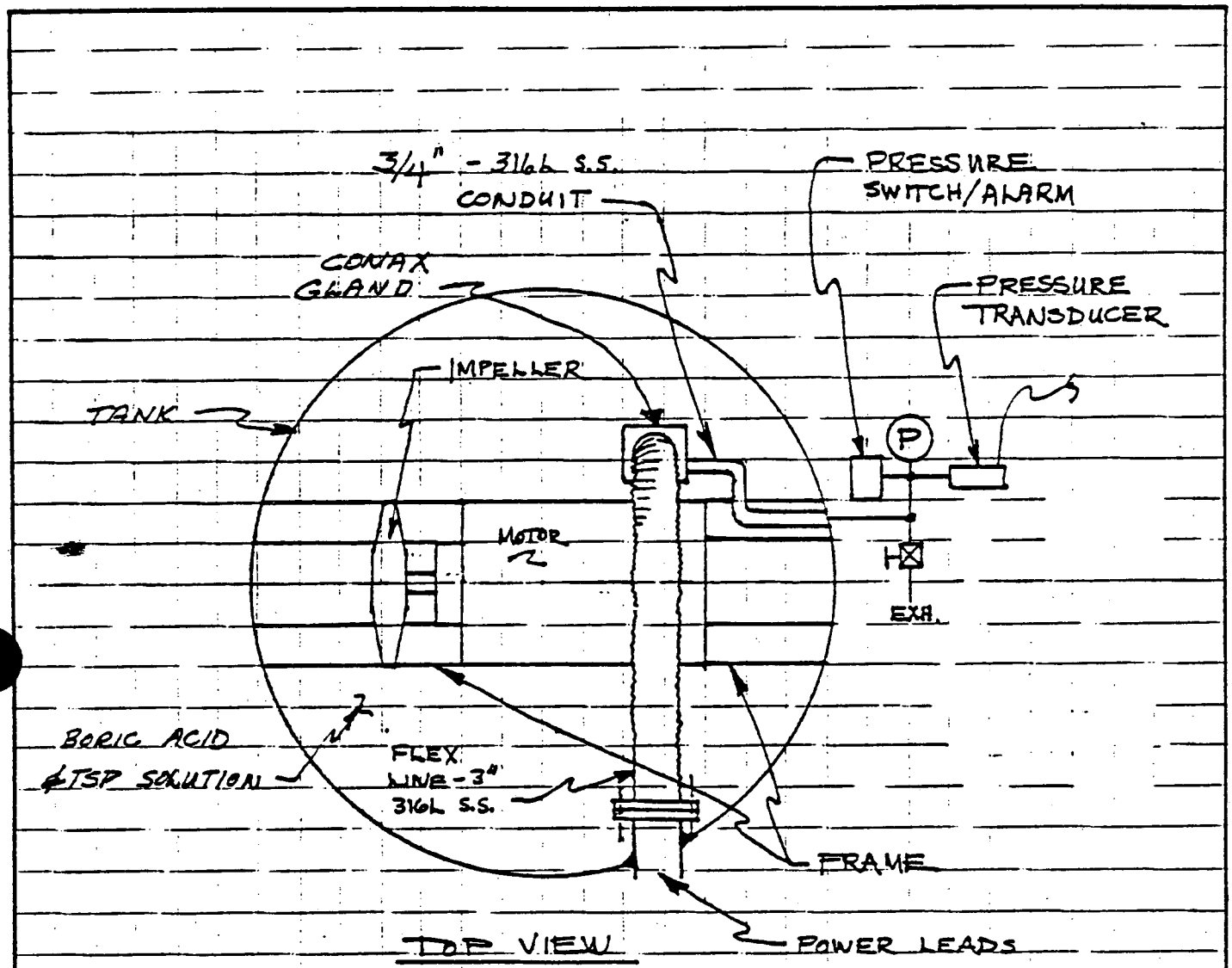

FIGURE 3
SETUP DETAILS

SAMPLE
DATA SHEET

Customer Southern Calif. Edison Job No. 57505

Date

Specimen

RECEIVING INSPECTION

No. of Specimens Received:

Record identification information exactly as it appears on the tag or specimen:

Manufacturer

Part Numbers

How does identification information appear: (name plate, tag, painted, imprinted, etc.)

Serial Numbers:*

Examination: Visual, for evidence of damage, poor workmanship, or other defects, and completeness of identification.

Inspection Results: There was no visible evidence of damage to the specimens unless noted below.

* If additional space is required for serial numbers, use an additional page, or reference first functional test data sheet (if applicable).

Inspected By

Sheet No. of

Approved Date:

W-614

Q.C. Form Approval

SPECIMEN 75 HP ELEC[illegible]C MOTOR

CUSTOMER SOUTHERN CALIFORNIA EDISON

PART NO.

S/N

TEST: QUALIFICATION

JOB NO.

DATE

TEST BY

WITNESS

WYLE LABORATORIES

EQUIPMENT	MANUFACTURER	MODEL NO.	RANGE	WYLE NO.	CALIBRATION LAST	CALIBRATION DUE	ACCY.
Wattmeter	Esterline-Angus	AW					
Current Transformer	Weston	461					
Reference Junction	Pace	BRJR134-12TD					
Digital Voltmeter	Hewlett-Packard	2401C					
Digital Printer	Hewlett-Packard	562A					
Temp. Controller	Honeywell	Y1526 15-60					
Flowmeter	Waugh	MT153					
Hi-Pot Tester	Assoc. Research	414					
Megger Tester	Freed Transformer	1620					
Environment Chamber	Wyle	--					
The above equipment, or equivalent equipment will be used in the test program.							
A data sheet like this will be completed and included in the final test report.							

Test Procedure No. 3599
Page No. 19

W 614 C

Q.C. Approval

SHEET OF

WYLE LABORATORIES

DATA SHEET

Test Procedure No. 3599

Page No. 20

REVISION A

CUSTOMER ______________________
Test Title: ______________________

Specimen ______________________ Job No. ______________________

______________________ S/N ______________________

Part No. ______________________ Date ______________________

Time	MOTOR LOAD DATA					MISCELLANEOUS DATA				A
	Current Leg 1	Current Leg 2	Current Leg 3	Line Voltage	Load in KW.	Pump Pressure	Chamber Pressure	Borate Temp.	Seal Temp.	

W 614 B

QC Form Approval

SHEET ______ OF ______

DATA SHEET

REVISION A

CUSTOMER _____

Test Title: _____

Specimen _____ Job No. _____

S/N _____

Part No. _____ Date _____

	MOTOR WINDING TEMPERATURE						COOLING WATER		
Time	TC1	TC2	TC3	TC4	TC5	TC6	Inlet	Outlet	Flow

A

Test Procedure No. 3599

NOTICE OF DEVIATION

TEST REPORT NO. _____ PAGE 22
WYLE JOB NO. _____
NOD NO. _____
PO NO. _____
DATE _____
GOV'T. CONT. NO. _____

WYLE LABORATORIES

TO: _____

ATTN: _____

PART NAME _____

PART NO. _____ SERIAL NO. _____

TEST: _____

SPECIFICATION _____ PARAGRAPH NO. _____

NOTIFICATION MADE TO: _____ DCAS — QAR _____

DATE _____ BY _____ VIA _____

SPECIFICATION REQUIREMENTS:

DESCRIPTION OF DEVIATION:

SPECIMEN DISPOSITION _____

COMMENTS - RECOMMENDATIONS:

TEST WITNESS: _____ TEST ENGINEER _____

REPRESENTING _____ DEPT. MANAGER _____

QUALITY CONTROL _____

DISTRIBUTION:
ORIGINAL: QUALITY CONTROL
( ) COPIES: CUSTOMER
1 COPY: JOB CONTROL
1 COPY: WHITE FOLDER
1 COPY: GREEN FOLDER
1 COPY: CONTRACTS
( ) COPIES: DCAS — QAR

WL-109A

QC Form Approved