August 7, 1997

Mr. John H. Robertus
San Diego Regional Water
Quality Control Board
9771 Clairemont Mesa Blvd., Suite A
San Diego, CA 92124

Dear Mr. Robertus:

Enclosed are five pages that were inadvertently omitted from our July 31, 1997 correspondence.

Sincerely,

Original signed by:

Marvin M. Mendonca, Acting Director
Non-Power Reactors and Decommissioning
Project Directorate
Division of Reactor Program Management
Office of Nuclear Reactor Regulation

Enclosure:
As stated

DISTRIBUTION:

Docket Files 50-206, 361 and 362	MSlosson	MFields
PUBLIC (w/incoming)	SWeiss	
PDND r/f	MMendonca	BSweeney
SCollins	SBajwa	Region IV
FMiraglia	EHylton(w/incoming)	WBateman
RZimmerman		
TMartin		
WTravers		
NRR Mail Room (YT#097010 w/incoming) (012-G18)		
MWebb (w/incoming)		

PDND:LA
EHylton
8/7/97

PDND:(A)D
MMendonca
8/7/97

OFFICIAL RECORD COPY
DOCUMENT NAME: G:\SECY\ACTN_ITM\YT097010.MTM

DF01

UNITED STATES
NUCLEAR REGULATORY COMMISSION
WASHINGTON, D.C. 20555-0001

August 7, 1997

Mr. John H. Robertus
San Diego Regional Water
Quality Control Board
9771 Clairemont Mesa Blvd., Suite A
San Diego, CA 92124

Dear Mr. Robertus:

Enclosed are five pages that were inadvertently omitted from our July 31, 1997 correspondence.

Sincerely,

Marvin M. Mendonca, Acting Director
Non-Power Reactors and Decommissioning
Project Directorate
Division of Reactor Program Management
Office of Nuclear Reactor Regulation

Enclosure:
As stated

and the decontamination pad are force ventilated. Before the air is discharged through the plant vent stack, it is monitored for radioactivity. Airborne radioactive ventilation systems are presented in detail in section 9.4.3.

A roll-up door, in the east wall at the south end, provides access to the north turbine deck extension at the 42-foot elevation. Also, a roof hatch provides the turbine gantry crane with access for handling spent fuel casks.

9.1.2.2.2 Spent Fuel Pit

The SFP provides handling and storage facilities for spent fuel assemblies after they are removed from the reactor and storage for the fuel shipping cask. The SFP is 68 feet long by 21 feet wide by 40 feet deep and is constructed of reinforced concrete 4 feet thick, lined with stainless steel, and contains 420,000-gallons of borated water that acts as a biological shield for the spent fuel.

Separate interconnected sections of the structure accommodate fuel storage racks (west end), spent fuel shipping cask storage (southeast end), and spent fuel upender equipment (northeast end). The arrangement is shown in figure 9.1-1. A removable weir gate can isolate the spent fuel pit and cask storage from the upender cavity for dewatering. A waterproof membrane encases the concrete structure, below ground level, to prevent groundwater from coming in contact with the concrete.

The spent fuel pit contains a welded stainless steel plate (0.12 in. thick below elevation 4'-0" and 0.06 in. thick above elevation 4'-0") liner which assists in maintaining pit water chemistry, by preventing concrete-water contact. In order to prevent damage to the liner in the cask handling area, a stainless steel plate, 2-1/4 in. thick, has been installed at the bottom of the cask handling area. The stainless steel plate provides protection for the liner in the event of a dropped cask. It also distributes evenly the load of the cask on the liner plate. In addition, the stainless steel liner provides a reliable long life material, with minimal rates of corrosion products released to the pit water.

The fuel pit is filled with borated water which provides shielding to personnel that limits the radiation dose rate at the water surface to a maximum of 2.5 mrem/h, with 216 spent fuel assemblies in the racks. The dose rate outside of the room will not exceed 1.0 mrem/h.

A minimum borated water level is maintained at elevation 40 feet 3 inches whenever fuel is in the racks. This level ensures that at least 23 feet of water would be available to remove 99% of the iodine gap activity assumed to be released in the event of a dropped and damaged fuel assembly. In addition, this level also ensures that there is adequate heat sink in the SFP and refueling cavity so that standby cooling methods can be initiated in

the event of a cooling system failure. This level will also ensure that at least 10 feet of borated water is above the top of the fuel rods when it is fully withdrawn from the rack and in the transport position to limit radiation dose rates at the water surface. A low-level alarm is annunciated in the control room at elevation
40 feet 6 inches so that the level is maintained above 40 feet 3 inches. A high level alarm is annunciated in the control room at elevation 41 feet 0 inches so that the level is maintained below the spent fuel room at elevation 42 feet.

The SFP is connected to the sphere refueling cavity through the fuel transfer tube. The SFP is connected to the primary make-up water, refueling water system, and boric acid tanks and pumps for additional filling capabilities. During refueling shutdown, the boron concentration in the SFP, the sphere refueling cavity, and the reactor coolant system are kept at a minimum of 2000 ppm. The SFP boron concentration is maintained at a minimum of 2000 ppm at all times when fuel assemblies are present.

The concrete surface area between the pit bottom and the stainless steel liner has several 1-inch channels that connect to a 2-inch perimeter channel. These will direct any leakage to a monitoring well on the north side of the pit.

Any water leakage is discharged through a pipe into a leak detection well which is located outside the building north wall, east end. The well extends down below the bottom of the pit; therefore, it collects water and will indicate leakage from any portion of the pit liner. The well is covered with a plate, in which there is a vent pipe and a closed inspection nozzle. Liner leakage is checked by observing any water discharged from the vent, or by removing the inspection nozzle cover and viewing water level in the well.

9.1.2.2.3 Spent Fuel Pit Piping Connections

The SFP pump normally takes suction from near the top of the pit, through a normally open, locally hand-operated valve. A low level suction is available for the SFP pump to drain the pit to about 28 feet 0 inch. This line is normally isolated by a valve to ensure that its suction is under proper administrative control. The SFP cooling recirculation line discharges to about 12 feet below the normal water level.

9.1.2.2.4 Decontamination Pad

The decontamination pad inside the fuel storage building provides a controlled environment for decontaminating the spent fuel cask. The decontamination pad area provides facilities for casks, fuel handling tools, and other small tools. Primary plant make-up water and steam connections are provided at the pad.

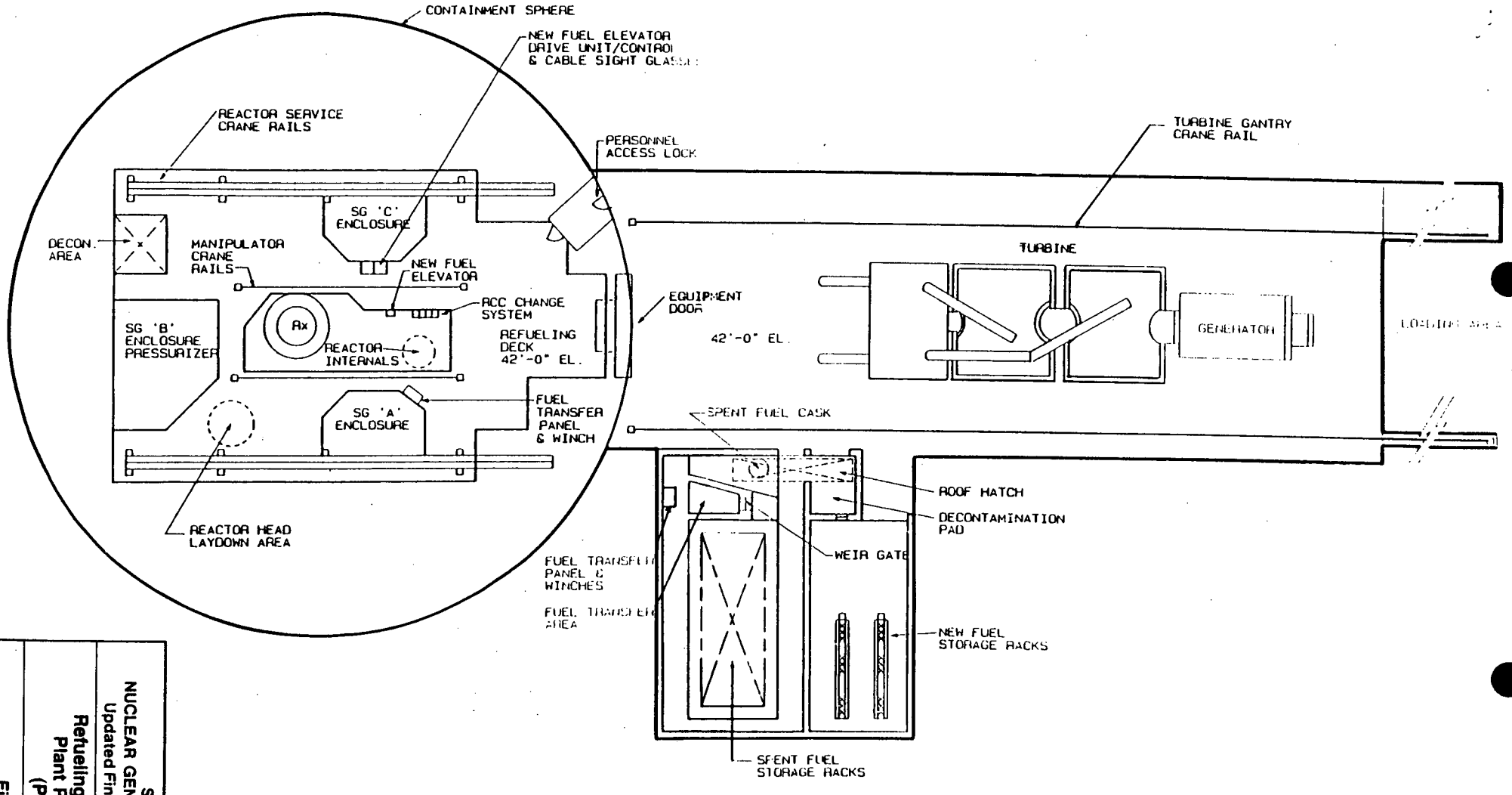

SAN ONOFRE
NUCLEAR GENERATING STATION, UNIT 1
Updated Final Safety Analysis Report

Refueling System Facilities
Plant Plan – 42'-0" EL.
(Page 1 of 3)

Figure: 9.1-3

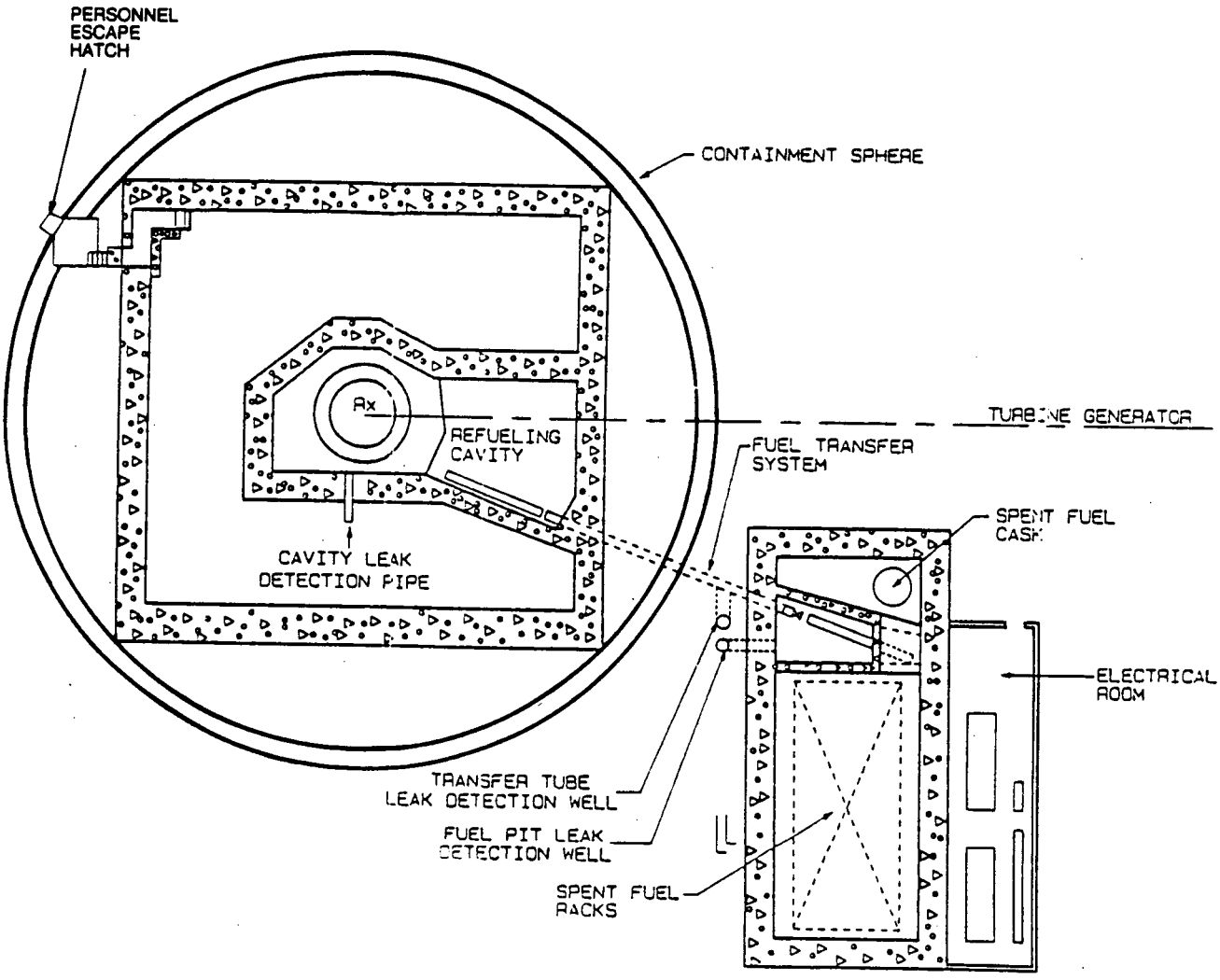

SAN ONOFRE NUCLEAR GENERATING STATION, UNIT 1 Updated Final Safety Analysis Report
Refueling System Facilities Plant Plan – 14'-0" EL. (Page 2 of 3)
Figure: 9.1-3

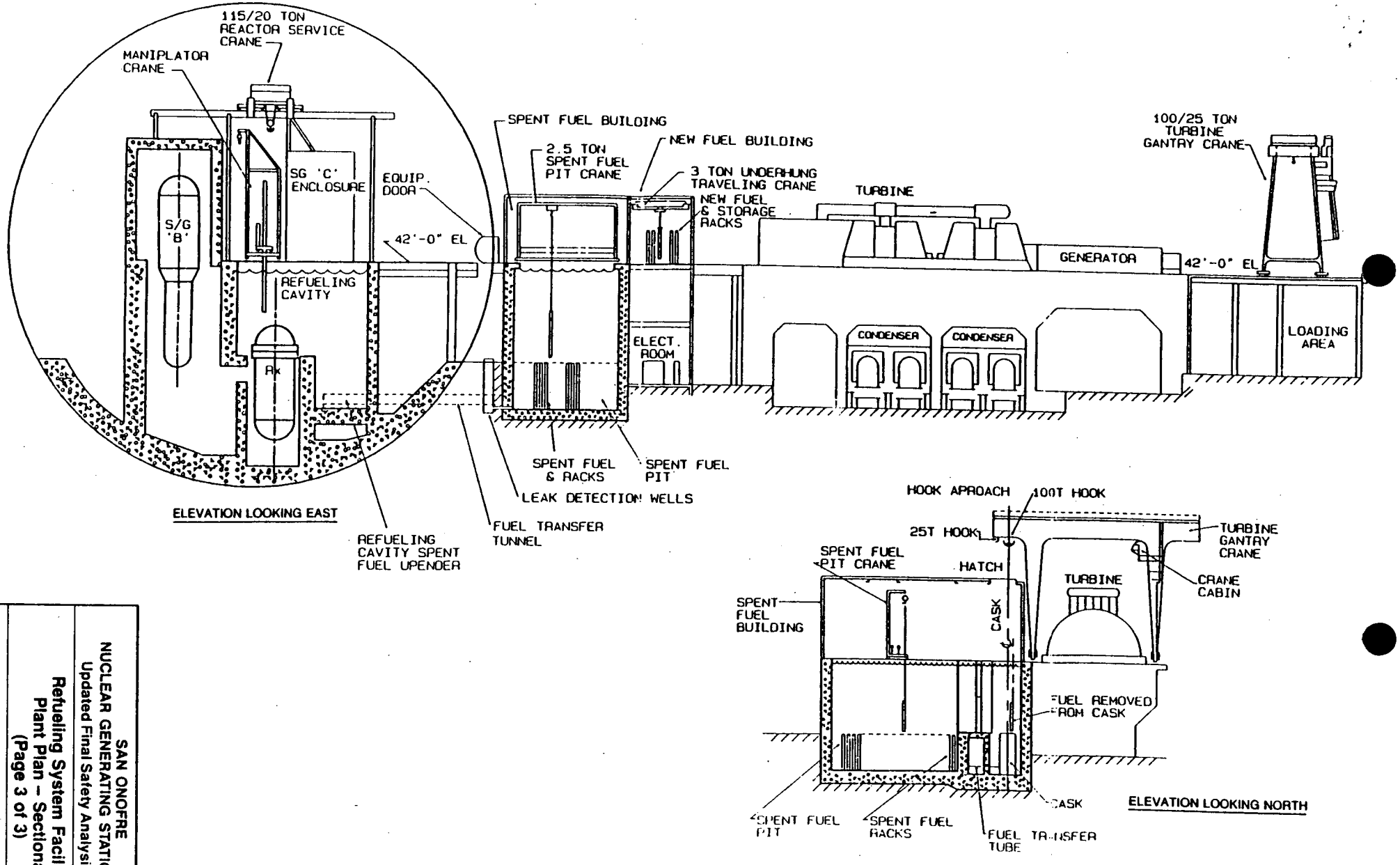

SAN ONOFRE
NUCLEAR GENERATING STATION, UNIT 1
Updated Final Safety Analysis Report

Refueling System Facilities
Plant Plan -- Sectional
(Page 3 of 3)

Figure: 9.1-3