EVALUATI[illegible]VERVIEW
DEFENSE IN DEPTH APPROACH

CASES	CONDITIONS	ANALYSIS	CONCLUSION
WORST EXPECTED	One flexture intact, three blocks degraded	o flow instability o seismic analysis o review all FSAR analyses	Acceptable Consequences
WORST CREDIBLE	All flextures and bolts are broken	o flow instability o seismic analysis o review all FSAR analyses	Acceptable Consequenses*
WORST CONCEIVABLE	Thermal shield drop	o drop impact analysis o normal operation o review all FSAR, DNB, and non-DNB events o LOCA, SLB (preliminary)	Acceptable Consequenses*

* Monitoring System will detect degradation prior to achieving this condition.

Figure 1

Enclosure 1

Concerns Regarding Thermal Shield

At SONGS 1

OVERALL CONCERNS

OC-1 "The overall concerns are that the thermal shield may (a) vibrate and cause damage to the core barrel, (b) create sizable and numerous loose parts, (c) obstruct flow and cause flow maldistribution, or (d) cause fuel failure due to deformation of the core barrel from thermal shield dislocation. The licensee has not analyzed transient or accident conditions with the thermal shield in either its current configuration or with progressively more damage."

RESPONSE:

The approach used to address this concern is to demonstrate that the thermal shield will remain in-place without adversely affecting the core barrel when a design basis seismic event occurs. This approach considers the worst credible degraded condition, as well as the current condition of the thermal shield support system. The worst credible degraded case is defined in Section 7.3, "Vibration Analysis for Worse Credible Degraded Case" of WCAP-12148 (Reference 1). In the report, the thermal shield support system was evaluated for the resulting flow induced vibration and seismic loads in Section 7.5, "Impact Loads Evaluation" and; the core barrel is evaluated in Section 7.6, "Effect of Seismic, Vibratory and Thermal Loads on Core Barrel." It was concluded that the resulting stresses are within allowable limits.

The only loose parts which might be expected during the next cycle of operation are remnants of the broken support block bolts. An analysis has been performed as discussed in Section 8.0, "Loose Parts Analysis," of WCAP 12148. This analysis confirms should these loose parts occur, there is no adverse impact on plant safety. Based on findings from Haddam Neck, if unexpected significant further degradation were to occur, the only additional plausible loose parts would be those resulting from failure of the irradiation specimen holders. The inspection revealed no indication of degradation of these tubes. The design of these tubes at SONGS 1 is less susceptible to degradation due to a two piece sliding joint design to accept relative motion between the thermal shield and the core barrel. Haddam Neck utilizes a one piece welded joint design. Therefore, loose parts evaluation was not performed for these parts.

Since it was demonstrated that the thermal shield will remain in-place if the worst credible degradation were to occur in conjunction with a seismic event, there is no effect on flow distribution, and there is no effect on existing accident or transient analyses. Notwithstanding this conclusion, the hypothetical assumption that the shield non-mechanistically falls to the lower radial keys has been evaluated for transients and accidents. The details of this evaluation are provided as Appendix A to this submittal. As discussed in Appendix A, this hypothetical condition is bounded by the existing design basis event analyses.

OC-2. "The lack of UT increases uncertainty regarding the number and state of the damaged bolts and pins and the structural integrity of the core barrel."

RESPONSE:

Two issues are raised; the condition of the apparently undegraded fasteners and the condition of the core barrel. With respect to the fasteners, it is agreed that a UT exam should give more definitive information regarding the current condition of the accessible fasteners. However, not all the fasteners are accessible with presently available or readily foreseeable UT delivery systems. In addition, the fact that the observed degradation correlates very well with the predicted degradation provides a high degree of confidence that the current condition of these fasteners is well understood. Furthermore, as documented in Section 7.0, "Consequences of Further Degradation," WCAP 12148 (Reference 1), analyses were performed which showed that even if all the bolts were failed (worst credible degraded condition), the thermal shield would still remain in-place, even during design basis seismic events. Thus while UT could be used to reduce uncertainty concerning the current condition of the fasteners, this knowledge will not eliminate every uncertainty. This uncertainty has been shown to be of no consequence with respect to thermal shield support conditions during an additional cycle of plant operation since it is bounded by the bolt failure analysis referenced above.

Regarding the condition of the core barrel, no UT examinations were performed because physical evidence of gross degradation of these thermal shield supports, irradiation specimen holders and flexures did not exist. Furthermore, the condition of the five flexures which were known to be broken based on previous inspections did not reveal any evidence of gross or unstable thermal shield behavior. This finding was also confirmed by analysis which showed that even in the worst credible degraded condition, instability would not occur. Analysis also showed that even if this worst credible condition were to occur, the resulting core barrel stresses would be within acceptable limits. Thus, a UT inspection of the core barrel was not necessary.

OC-3. "Many bolts and pins of the support blocks are already degraded and the rate of further degradation is based on engineering judgment rather than on facts."

RESPONSE

The predicted rate of degradation is based on a combination of historical facts and engineering analyses. Analytical methods have been used to support the conclusions. The analytical methods used to perform the evaluation were developed during the investigation and analysis of the Haddam Neck thermal shield issue. These techniques were subsequently used to successfully predict that no degradation would be found during the thermal shield inspection at the Jose Cabrera Nuclear Plant in Zorita, Spain. The very same analysis methods were used prior to the inspection at San Onofre to successfully predict that degradation should be expected at two of the support blocks if the

remaining flexure were still intact. Following the SONGS inspection, the same methodology was correlated with the results of the post-hot functional test examination at SONGS 1 and used to explain the history of the degradation of the thermal shield support system. In conclusion, the predicted future behavior of the SONGS 1 thermal shield support system is based on the use of an analytical methodology which has an excellent track record.

OC-4. "In view of uncertainty regarding the bolts of the support blocks there is a possibility that as a result of vibration of the thermal shield the support blocks may slip out from their positions. In the worst case the thermal shield could drop to the bottom of the reactor vessel."

RESPONSE

The "uncertainty" regarding the bolts has been addressed in the response to the second concern. As documented in Section 7.0, "Consequences of Further Degradation," of WCAP 12148 (Reference 1), analyses were performed which demonstrate that safe operation can be maintained even with the worst credible degraded condition of the thermal shield supports. Even if all the bolts were to fail, the possibility that one or more blocks could slip out of position is essentially non-existent because of the design features which are discussed in Section 7.0, "Expected Support Block Degradation," and 7.1, "Definition/Evaluation of Worst Possible Degraded Cases," of WCAP 12148. Figure OC-4-1 shows the design also includes a self-locking feature which supports the thermal shield if the block ledge on which the shield rests is fractured or worn away. While there is no credible scenario for failure of this ledge, the design provides for this postulated condition. The analyses of the worst credible degraded condition which are documented in the subsequent sections of WCAP 12148 provide further confirmation the thermal shield will remain in-place and in a dynamically stable condition. The ultimate conclusion of the various analyses, including the seismic analysis is that the thermal shield will remain in-place even if all the bolts are broken.

In addition, if all the blocks were to non-mechanistically fail or come out of position, analysis has shown in Section 9.2, "Thermal Shield Drop Analysis," of WCAP 12148 the lower radial support keys can withstand the resulting impact of the thermal shield without exceeding stress limits. These lower radial support keys are located well above the bottom of the vessel (11 inches total drop) and the total flow in the downcomer would not be significantly reduced (see Figure OC-4-2). It was also shown that if the shield did drop onto the lower radial supports, there would be no adverse effect on normal operating reactor core limits, nor the consequences of design basis accidents.

In conclusion, analyses and evaluations have been performed which demonstrate that the thermal shield dropping to the bottom of the reactor vessel is not credible.

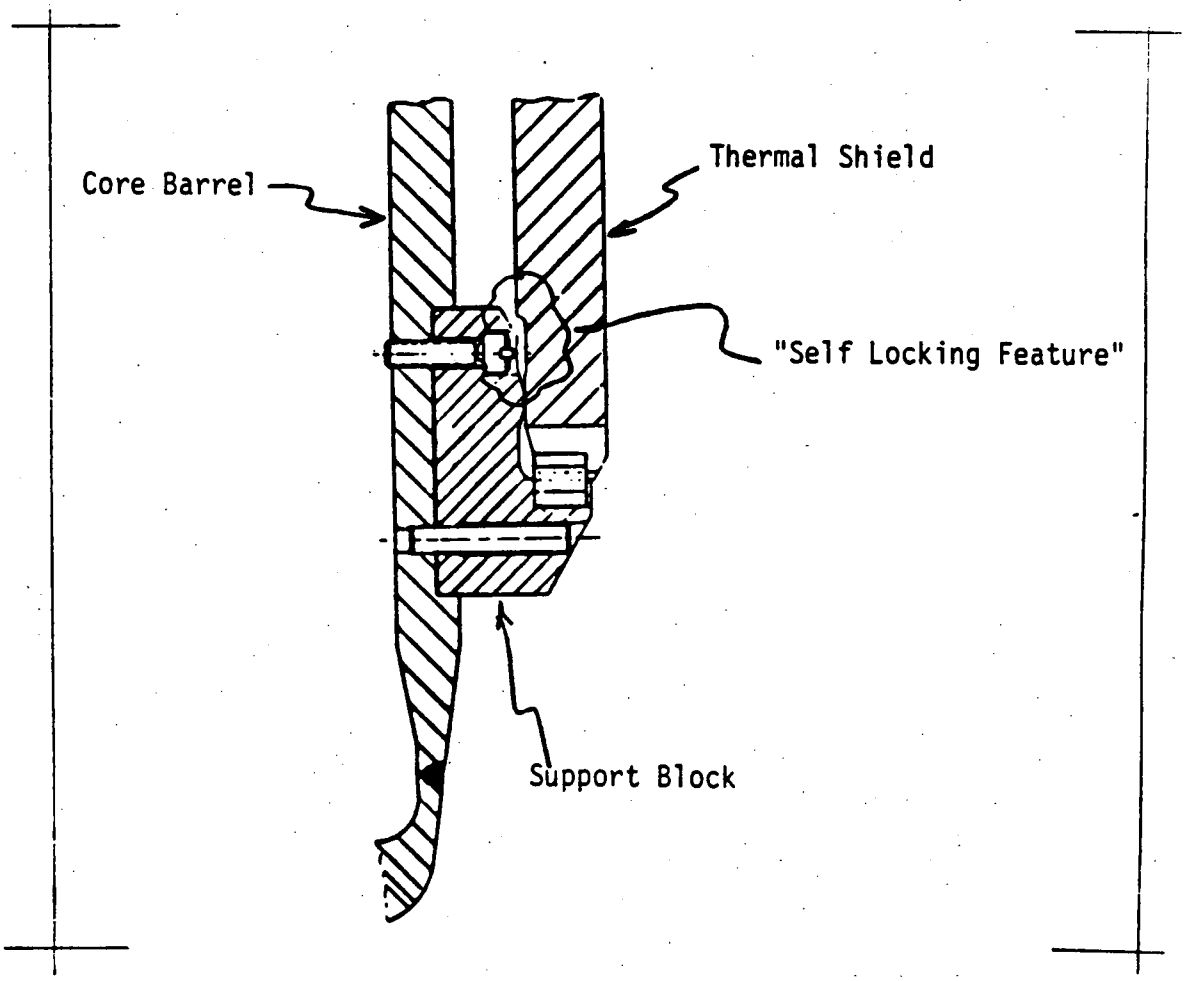
Core Barrel
Thermal Shield
"Self Locking Feature"
Support Block

Figure OC-4-1

Figure OC-4-2

REACTOR VESSEL AND INTERNALS

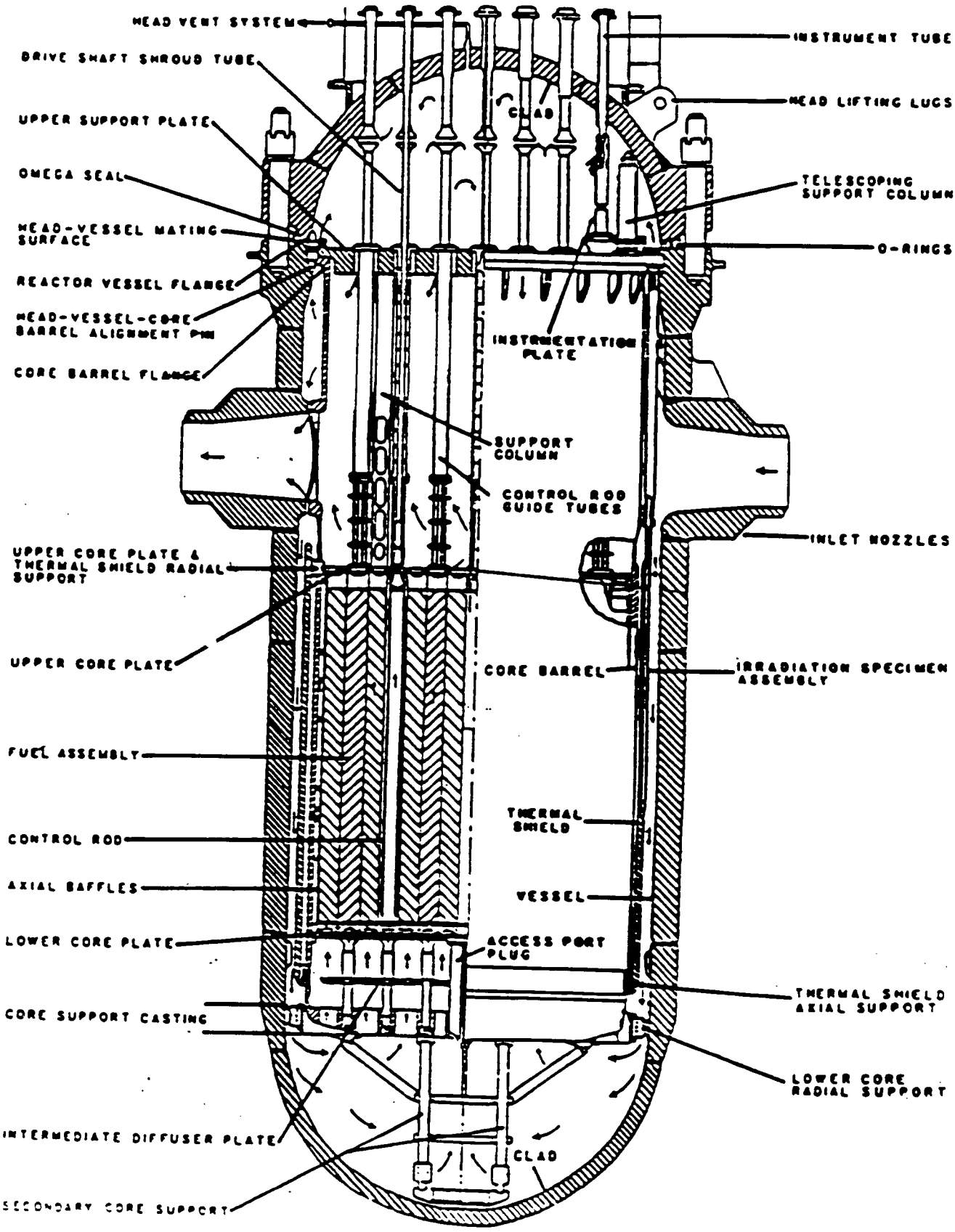

OC-5. "The neutron monitoring system proposed is too vague. It cannot be concluded from the available information that further degradation would be detected."

RESPONSE

The purpose of the monitoring program is to detect changes from the present thermal shield condition which has been determined from inspection results. Monitoring data obtained during the next cycle of operation will be compared with data acquired in a forty-five day period for changes that might reflect further degradation of the thermal shield. Preliminary neutron noise data and analysis results indicate that degradation to the postulated worst credible case will be detectable. A detailed response can be found in specific concern SC-9. (Note: SCE has proposed a change to License Condition 3.M reducing the data monitoring period from 90 days to 45 days. See Enclosure 2 of this letter for specific changes).

OC-6. "The licensee did not provide sufficient information regarding seismic evaluation to enable the staff to formulate a meaningful opinion. More specific information regarding methodology used in computing impact loads and the techniques used for computing seismic loads at various locations would be required."

RESPONSE

Further details are contained in Section 7.4, "Seismic Analysis," of WCAP 12148 (Reference 1); however, a brief explanation follows. Impact loads during a seismic event were obtained by performing a nonlinear time history seismic analysis utilizing the WECAN code. The analytical techniques as well as the WECAN code used are standard techniques that have been employed in the dynamic analysis and licensing of the majority of the Westinghouse supplied nuclear steam supply systems. The nonlinearity of this model is due to the gaps which exist between the core barrel and the vessel (at the core barrel flange and the lower radial support keys) and the gaps at the displacement limiter keys. Time history input accelerations at the level of the vessel supports were used and the response spectrum of this wave enveloped the SONGS 1 specific seismic spectrum. Seismic loads on the flexure were obtained by linearizing these gaps, based on the use of equivalent linear springs, and performing a linear response spectrum seismic analysis. For support block loads, results of the detailed 3-D flow induced vibration analysis and the response spectrum analysis were used to calculate seismic loads on support blocks using ration techniques. (Note: Subsequent to the March 14 meeting, the NRC telecopied additional concerns regarding seismic analysis. A response to these issues is in development and will be forwarded March 24, 1989).

OC-7. "The Westinghouse letter of February 12, 1988 to the licensee discusses three possible and progressively worse scenarios. Given the lack of definitive data on the current condition of the bolts and pins, and the relatively qualitative monitoring system, the staff is not convinced that the continued operation of SONGS 1 can be justified without repair."

RESPONSE

The referenced letter was issued to Southern California Edison (SCE) in order to summarize the potential implications for SONGS 1 of the Haddam Neck thermal shield support degradation issue. It should be noted that SCE had previously requested a meeting at the site to review this situation as soon as Westinghouse advised that the SONGS 1 support system was conceptually similar to the Haddam Neck design. The letter served to document the items which were discussed at the meeting and it also provided an update to the earlier Westinghouse letter which notified SCE of the issue.

At the time the letter was written, no specific evaluations or analysis had been performed to address thermal shield support system degradation for the SONGS 1 plant. Thus the letter could only provide information regarding the potential concerns to assist SCE in deciding how to proceed.

Since the letter was issued, SCE and Westinghouse have taken a number of proactive steps to address the potential concerns which were identified in the letter. The specific actions taken as a result of the letter include:

- Performed analysis prior to the start of the refueling outage to develop estimates for the loads acting on the SONGS 1 thermal shield supports and used this information to determine probable extent of any degradation.

- Considering constraints of fuel storage capabilities, performed visual inspections of the upper and lower thermal shield supports, irradiation specimen holders and bottom of the reactor vessel in order to determine if extent of degradation is as severe as observed at Haddam Neck.

- Performed analysis to evaluate expected progression of degradation and determined if significant further degradation is expected to occur during an additional cycle of operation.

- Determined static and dynamic stability limits for the thermal shield system and determined if these limits are expected to be violated for current and further degraded support conditions.

- Performed analysis to determine if structural integrity of the thermal shield support system and the core barrel can be maintained even if the support system degrades to the "worst credible degraded condition" and considering the effects of the design basis earthquake.

- Even though analyses confirm that the thermal shield will remain in-place considering worst credible degraded conditions and design basis seismic event, performed additional analysis to evaluate structural consequences of postulated support system failure such that thermal shield is able to impact against core barrel or fall onto lower radial supports.

- As an extension of the preceding step, performed analyses to determine effect of postulated support system failure on core inlet flow distribution, total core flow and core limits during normal operating conditions.

- In order to ensure that significant, unexpected further degradation could be detected, performed analyses to estimate impact on vibratory frequencies and displacements and develop a monitoring program based on the use of the neutron noise signals from the ex-core detectors. Also, implement loose parts monitoring in order to track the existence of any loose parts that would develop.

Based on the results obtained from the various inspections, numerous evaluations and analyses, both Westinghouse and Southern California Edison have concluded that a repair can be deferred for one fuel cycle without adversely affecting safety.

SPECIFIC CONCERNS

SC-1. BOLT FATIGUE EVALUATION

The top bolt fatigue evaluation was performed on a best estimate basis to explain the current observed condition of the thermal shield lower support blocks. These analyses were extended to predict the expected progression of the thermal shield degradation over the next fuel cycle (18 months).

The following response are given for bolt fatigue evaluation questions.

SC-1a. "Why was loss of bolt preload from radiation-assisted relaxation not considered?"

RESPONSE:

Radiation-assisted relaxation was not considered to be a concern based on the information obtained on the Haddam Neck thermal shield lower support bolts. One bolt removed from the Haddam Neck lower supports was subjected to a tensile test. The results showed the yield stress to be 77 ksi and the specified drawing yield stress for this bolt was 65 to 80ksi. The yield stress of stainless steel tends to increase with exposure to irradiation. There is only a slight increase in yield strength even if the measured value is compared to the low end of the specified yield stress. This would indicate that the bolt was affected very little by irradiation.

As shown in Figure SC-1-1, the lower support blocks at Haddam Neck are approximately 3 inches below the lower core plate and blocks at SONGS 1 are approximately 11 inches below the lower core plate. Also, the Haddam Neck plant has been in operation longer than SONGS 1 (15 effective full power years vs. 11 effective full power years). Considering the above, it is probable that the SONGS 1 lower support blocks have been exposed to less radiation than the Haddam Neck lower support bolts. Therefore, it is concluded that the SONGS 1 lower support bolts have been affected very little by irradiation, therefore radiation-assisted relaxation is not considered. However, the bolt preload was reduced by 12% to account for thermal stress relaxation in the temperature range of 500°F to 700°F.

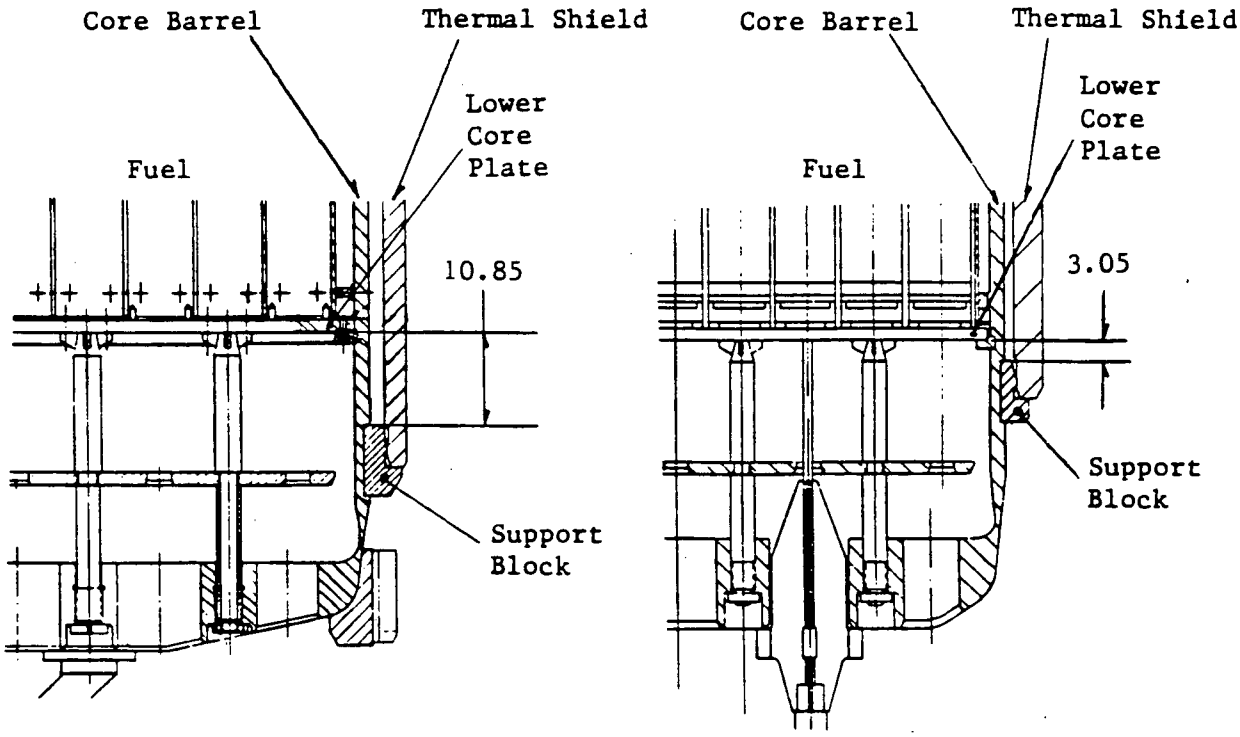

SONGS 1

HADDAM NECK

DISTANCE FROM BOTTOM OF LOWER CORE PLATE TO TOP OF SUPPORT BLOCK

Figure SC-1-1

SC-1b. "Why was a Section III fatigue analysis not performed?"

RESPONSE:

A Section III fatigue analysis is formulated to ensure that cracks will not initiate in a structure over the design life of the structure. This type of analysis would not necessarily predict the failure of a component even if the fatigue evaluation criteria was not completely met.

The purpose of the fatigue evaluation performed was to predict at which support blocks, bolt failure was expected to occur. Bolt failure was predicted at the 0° and 240° blocks and possibly at the 300° block. This matches quite well with the observed degradation at the 0° and 240° blocks.

SC-1c. "Justify the use of failure curves in lieu of lower bound (or "design") curves for the fatigue analysis."

RESPONSE:

The failure curve is used to define the point of failure of the bolts if a CUF of 1.0 is reached. Use of this curve is based on the fatigue evaluation of the top bolts during hot functional testing considering the fact that the post hot functional inspection of the bolts did not reveal any bolt failures. Therefore, the fatigue evaluation, using the failure curve, of the bolts was adjusted so a CUF of just below 1.0 (.99) was obtained for the bolts at the highest loaded blocks (0° and 180°) considering 21 days of hot functional testing. This assumption was made since the bolts were removed and inspected following this test and did not show any evidence of cracking. Once this correlation was made, the fatigue analysis was performed to determine the expected locations of bolt failures at various points in the operational history of the plant.

In conclusion, since the purpose of the fatigue analysis was to predict the locations of expected bolt failure, it was appropriate to use the failure curve rather than the design curve.

SC-1d. "Explain the basis for the use of a strain concentration factor in the context of established procedures for CUF calculations."

RESPONSE:

When the alternating stress is above the material cyclic yield stress, a strain concentration factor should be applied rather than a stress concentration factor because the elastic stress concentration factors are no longer valid. Since the failure curve was used in lieu of the design curve, it was appropriate to use an increased concentration factor when the material cyclic yield was exceeded. The paper "Elastic-Plastic Analysis of Blunt Notched CT Specimens and Applications," by W. K. Wilson (Journal of Pressure Vessel Technology, Reference 2) presents a curve (see Figure SC-1-2) that shows how stress and strain concentration factors vary as a function of Sn/Sy. This curve was used to account for the increase in local strain when the material cyclic yield was exceeded.

Therefore, it is appropriate to make an adjustment to the concentration factor when the material cyclic yield was exceeded in conjunction with using the failure curve.

SC-1e. "NB-3232.3(c) recommends use of a fatigue strength reduction value of not less than 4.0. Justify use of a smaller value.

RESPONSE:

An elastic concentration factor of 4.0 was used at the threads for tension and this value is based on the ASME Boiler & Pressure Vessel Code Section III paragraph NG-3232.3(c). For bending, the elastic concentration factor used was 3.5. This is based on a comparison of concentration factors for a grooved shaft ("Peterson," Figures 31 and 49) where a 4.0 factor in tension corresponds to a 3.5 factor in bending for the same geometry.

When the material is cycling in the elastic range, a notch sensitivity factor can be used to lower the concentration factor. In the case of the 316 SS bolts, a material notch sensitivity factor of q = .6 is applicable. The resulting fatigue notched reduction factor K_f, is determined by:

$$K_f = 1 + q\,(K_t - 1)$$

where:

K_f = Fatigue notched reduction factor

K_t = Elastic stress concentration factor

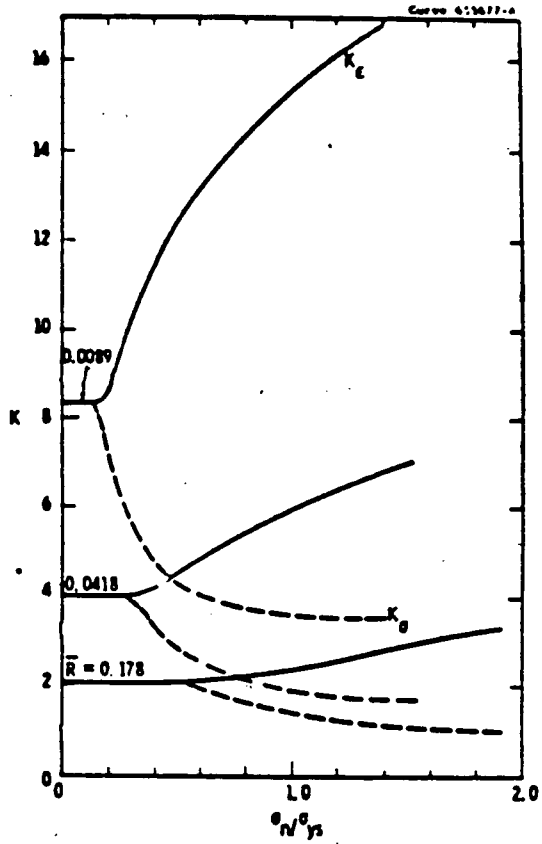

Fig. 5 Stress and strain concentration factors for blunt notched CT specimens. Curves constructed from plane strain finite element solutions using cyclic stress-strain curve of 304 steel.

REFERENCE - "ELASTIC-PLASTIC ANALYSIS OF BLUNT NOTCHED CT SPECIMENS AND APPLICATIONS", BY W. K. WILSON (JOURNAL OF PRESSURE VESSEL TECHNOLOGY).

Figure SC-1-2

SC-2. During the 1988 refueling outage, a limited visual inspection was performed based on the available access.

"By using a different camera system or removing more fuel assemblies could: (a) additional surfaces of the components be inspected or (b) additional access be provided to the lower thermal shield support blocks, the limiter keys, or the core barrel radial support keys?"

RESPONSE

As explained below, removing additional fuel would not have enhanced accessibility for the camera system. The camera and supporting systems utilized was evaluated superior to other systems in accessibility, picture quality and proven performance in a high radiation environment.

The parameters under which the inspection plan was developed is explained as follows:

- Due to the lack of storage space in the spent fuel racks, the fuel in the core could not be completely unloaded, therefore not allowing the core barrel to be removed.

- Transshipment of the spent fuel to Unit 2 and 3 could only be performed in modes 5 and 6, resulting in the thermal shield inspection paralleling transshipment activities.

- With the core barrel in the vessel, access to the annulus between the core barrel and the reactor vessel could only be achieved through four equally spaced 2.85 inch holes in the upper core barrel flange (see Figure SC-2-1).

- Some of the components were restricted from inspection on the outside because of the location of the core barrel lifting holes and the reactor vessel nozzle bosses (see Figure SC-2-2).

Thus the thermal shield inspection had to be performed with the core barrel in the reactor vessel.

By July 1988, SCE and Westinghouse formulated an inspection plan to assess the integrity of the SONGS 1 reactor vessel thermal shield supports and attachments with the thermal shield installed. The plan also identified special tooling/video equipment and techniques to inspect as many components as possible and to ensure proper positioning of the camera.

The optimum camera system, taking into account the various limitations, was used based on plant experience with similar applications and the detailed inspection study. Other camera systems were evaluated and could not be used due to access limitations, system abilities, picture quality and the lack of experience operating in a high radioactive field.

Therefore, using a different camera system would not have allowed inspection of any additional support surfaces or components.

A complete inspection of the vessel interior was performed using a special fuel shuffle. Fuel assemblies were temporarily removed in the area of each thermal shield support component to allow complete inspection of all mounting hardware that fastened the support blocks to the core barrel.

Fuel assemblies were also temporarily removed at several locations which allowed inspection of the bottom of the vessel for debris. Therefore, removing additional fuel assemblies would not have provided further access to the lower thermal shield support blocks, limiter keys or the core barrel radial support keys.

The only other method identified for inspecting the support components from the core barrel to vessel ID was to remove two reactor head and vessel alignment pins. Removing the pins would access the 0 and 180 degree lower support blocks and upper limiter keys. Proper installation of the alignment pins are critical and experience has shown alignment pins are virtually impossible to reinstall under 25' water. The barrel has a tendency to be hard against one side of the pin which could further complicate reinstallation efforts. This conservative approach was taken to ensure that necessary inspections were made without potentially misaligning reactor and vessel alignment pins.

The analyses assumed all of the limiter keys were worn and the 0 degree fasteners degraded. The core barrel radial support keys were inspected in 1976 and no significant degradation was observed. The radial support keys are part of the 10 year ISI to be performed during cycle XI refueling outage.

The visual inspection of the bolts, flexures, irradiation specimen guide tubes and baskets, provided adequate indication of the thermal shield support system condition. The inspection results determined the current condition of the thermal shield support system and supported the predictions made in the pre-analysis prior to the start of the outage.

SC-3. Core Barrel to Lower Support Weld

"Was this core barrel weld inspected during the 1988 refueling outage? If so, extent of examinations?"

RESPONSE

No, this weld was not inspected at this outage. The second scheduled 10 year ISI inspection will inspect this weld. This inspection is scheduled for the next refueling.

Also no anomalies of this weld were noted in the last 10 year inspection. In addition, the loads from the thermal shield lower supports are concentrated at the block locations. These loads are dispersed and distributed throughout the full core barrel circumference hence no anomalies are expected. For further information on this aspect, reference the following response.

SCE

Figure SC-2-1

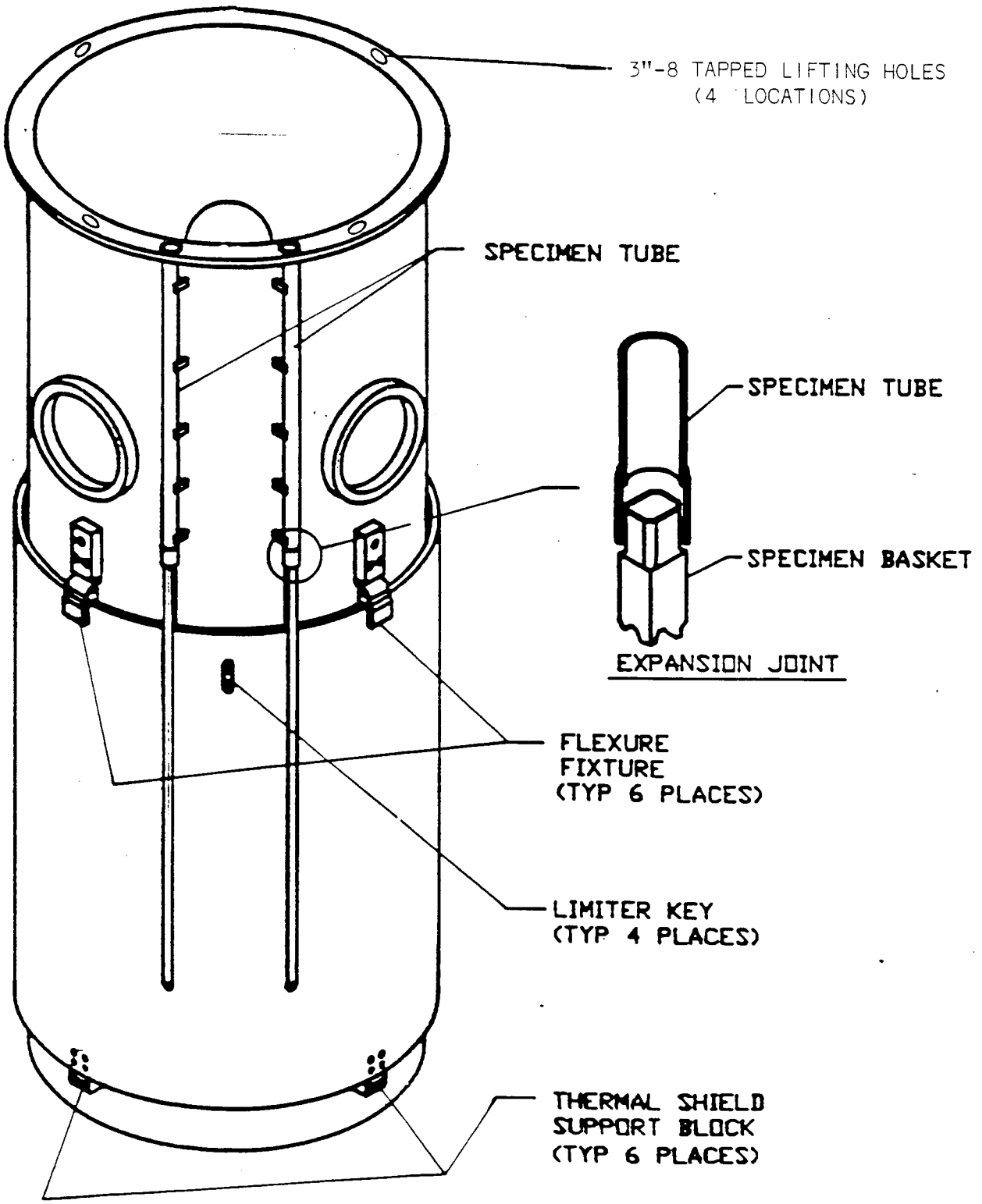

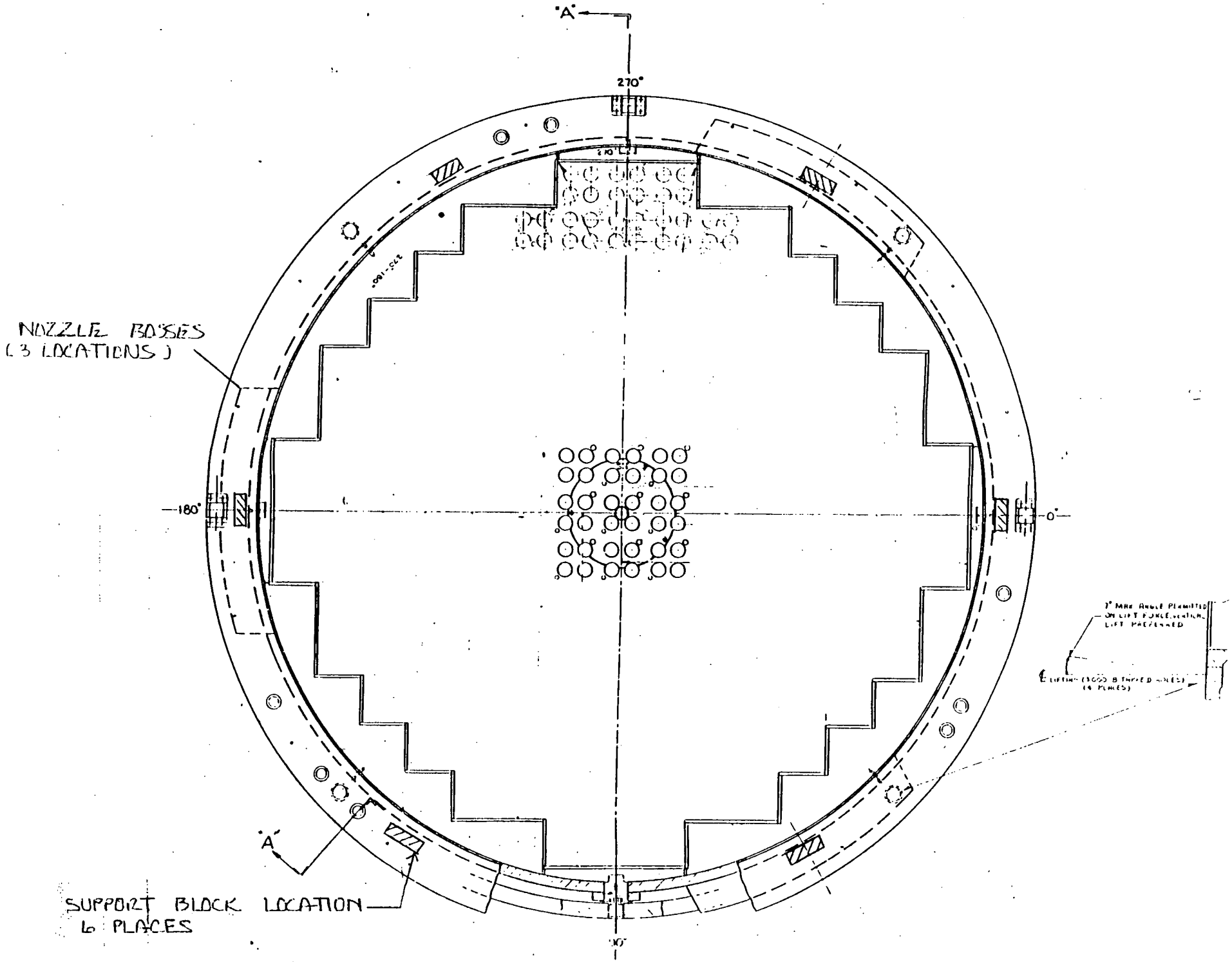
"A"
270°
NOZZLE BASES
(3 LOCATIONS)
180°
0°
"A"
SUPPORT BLOCK LOCATION
6 PLACES
90°

FIGURE SC-2-2

SC-4. "Will one cycle of operation with the "Worst Credible Degraded Case" cause or increase the probability of cracking of the core barrel to lower support weld?"

RESPONSE

One cycle of operation with the "Worst Credible Degraded Case" will not adversely effect the core barrel to lower support weld. A fatigue analysis has been performed which demonstrates that the cumulative fatigue usage factor would be less than 1.0. Hence one cycle of operation in the worst credible condition will not cause or increase the probability of fatigue cracking of the core barrel to lower support weld.

The SONGS 1 plant includes a secondary core support assembly as an additional safeguard against failure of the core barrel. This assembly is mounted to the bottom of the lower core support plate and is used to ensure that in the event of unexpected failure of the core support assembly, the core could only drop roughly 1 inch in cold conditions and roughly 1/2 inch at operating conditions. This ensures that the control rods would still maintain engagement and that the core would still be supported in a coolable manner even in the worst conceivable and incredible event of core barrel or weld failure.

SC-5. "The licensee proposes to operate until the potential damage becomes an economic burden."

Describe the plausible additional damage to the thermal shield, core barrel or reactor vessel that the licensee is prepared to accept and repair after shutdown. Estimate the additional radiation exposure to repair personnel as a result of this plausible additional damage.

RESPONSE

The operating plan being forwarded by SCE does not propose operation until the potential damage becomes an economic burden. Rather, it is proposed to operate for one additional fuel cycle, or less if the monitoring program indicates that a significant increase in economic risk is occurring. The one fuel cycle time limit was chosen since this will allow the time needed to effectively and efficiently develop an optimum repair plan, thus saving manrem exposure and cost to SCE.

The analysis preformed does not predict further degradation to the support system over the next cycle of operation. However, should further support fastener degradation occur, SCE is willing to accept this risk because it represents minimal, if any, additional radiation exposure to the repair personnel and economic consequences.

SCE is not willing to risk significant damage to the core barrel, thermal shield or reactor vessel. The analysis has shown that even in the worst credible case, the thermal shield will remain dynamically stable and not cause significant damage to the core barrel, thermal

shield or reactor vessel. In addition the monitoring program will detect changes in the system prior to progressing to the worst credible condition. Therefore, SCE is willing to accept the risks even for this worst credible case.

To address the issue of radiation exposure, the following areas were considered regarding performing the repair now versus deferral to Cycle XI.

- Repairing now would require an additional disassembly, core offload/reload and reassembly of the reactor vessel. Deferring the repair would allow the repair work to be performed as part of the scheduled reactor vessel refueling work in Cycle XI. This would result in a savings of approximately 63 manrem.

- Core barrel removal is planned for the Cycle XI outage to support the vessel ISI exam. Repairing the thermal shield now would mean performing the barrel removal effort twice.

- Performing the repair effort this outage would necessitate the extensive use of divers. This would involve an intensive HP effort and increased overall manrem exposure due to the diver support personnel required. Deferral of the repair to Cycle XI would allow more time to develop and maximize the use of remote tooling while minimizing the requirement for divers. This would result in less risks to potential fuel flea overexposures and an approximate savings of 15 manrem.

- Based on Cycle X operational data, performance data from the Haddam Neck repair and increased time for modeling/testing, an optimum advanced design could be achieved as a result of postponing the repair. In addition using an expedited design may require repair again at a later date. Savings of up to 4 manrem could be achieved because this additional design time could minimize the repair effort required; more if repairs do not have to be repeated.

- Repairing the thermal shield now would require on-the-job training resulting in increased manrem exposure to the repair workers. Deferral would allow sufficient time to develop SONGS 1 specific mockups and perform detailed mockup training prior to site arrival.

- Work on the thermal shield could require the core barrel to be placed in its storage stand, which leaves a portion of the barrel above the operating deck and increases the general radiation levels in containment. If the repair is performed in Cycle XI, sufficient time would exist to minimize the time the barrel is above the deck and thus minimize exposure not only to the repair personnel but also to anyone working in the containment.

EXPOSURE COMPARISON
(Estimates based on Haddam Neck and SONGS Unit 1 data)

TASK	REPAIR NOW (MANREM)	REPAIR CYCLE XI (MANREM)
REACTOR DISASSY/FUEL MOVEMENT/REASSY	126 (1)	63
THERMAL SHIELD SUPPORT REPAIRS	46	23
TOTAL	172	88
	(86 manrem delta or 48%)	

(1) Required for both the present outage and again in Cycle XI

Based on the areas outlined above, deferring a repair would not require duplication of reactor vessel efforts; allow more time to effectively plan the repair maximizing the use of remote tooling (which would minimize the use of divers like the Haddam Neck repair); allow more time for training of the repair personnel; and optimize the repair design such that radiation exposure would be significantly reduced below levels which would be experienced during an unanticipated repair.

SC-6. "When did bolt and pin degradation occur?"

RESPONSE

It is estimated based on the fatigue evaluation of the lower support top bolts that the bolt degradation initiated when only one flexure was still intact (at 124°) and sufficient wear had occurred at the limiter keys. This would have been sometime during the last 5-6 years of effective full power operation based on the fact that two flexures were intact prior to that point in time. The inspection did not indicate any dowel pin degradation.

SC-7. "What preload is currently assumed in the bolts?"

RESPONSE

The total assumed effective preload in the lower support top two visible bolts is 12,350 lbs. (6,175 lbs./bolt) at 600°F. This value assumes a 12% reduction due to thermal stress relaxation and does not take credit for the portion of preload (approximately 5000 lb.) needed to close the as-built gap between the back of the thermal shield and the support block.

SC-8. "Assuming all bolts and pins in support blocks are failed what is the effect of this on thermal shield liftoff during a LOCA?"

RESPONSE

A qualitative evaluation of the ability of the degraded SONGS 1 thermal shield to withstand relative vertical motion (liftoff) has been performed to assess the issue of liftoff.

Figure 2.0-2 of WCAP 12148 shows each of the six support blocks rests in a groove that is machined on the outside of the core barrel. In addition, vertical motion of the blocks relative to the core barrel is restrained by two lower dowel pins and the visual examination confirmed that all of these pins are still in their nominal position. The support blocks are thus restrained from moving upward as well as downward by the geometry of the support system.

Each support block has two dowel pins which restrain relative vertical motion between the shield and the blocks. This is the design function of these dowel pins. If the dowel pins were not present, then the two upper visible bolts would provide a restraint against relative vertical motion between the shield and the block. Even though it was not possible to obtain head-on views of all of the dowel pins and the inside ends of the dowel pins are not visible in the interior inspection, it was possible to obtain a head on view of these dowel pins at the 240° block. That examination confirmed that these dowel pins were in-place for the other blocks. Additionally, oblique exterior views were obtained at three of the remaining five blocks and no protrusion of dowel pins was observed. In addition, no dowel pins were found during the examination of the bottom of the reactor vessel. Finally, at Haddam Neck, where some of the dowel pins at that plant were found to have cracked or fractured. It is expected that those at SONGS 1 would not crack or fracture either. Based on a consideration of these factors, it is reasonable to conclude that even in the degraded condition, relative vertical motion between the shield and the support blocks is still restrained by the dowel pins. This is the same as the original design even though any extra conservatism that might have been due to the bolts would now be reduced. Though the bolts in the support blocks are degraded, the relative vertical motion between the thermal shield and the core barrel is still restrained as in the original design.

Assuming the worst credible condition where all bolts and pins are failed, the six flexure blocks above the shield (2.5" above the top of the thermal shield) can resist the uplift due to a double ended break at the vessel inlet nozzle. The additional drop height due to this postulated lift does not alter the conclusions of the thermal shield drop analysis. Additionally for the unexpected case where the dowel pins are also failed, the same result is obtained.

SC-9. "The following comments are related to the proposed thermal shield monitoring program for the SONGS 1 plant, presented to the staff on Friday January 27, 1989.

A neutron noise based internal vibration monitoring program was suggested. For such a surveillance program to be effective long-term baseline data is required and the detectability limits established.

The staff believes that neither is feasible for the SONGS 1 thermal shield.

To establish a baseline data base for the thermal shield:

(a) the thermal shield must have the proper preload on the supports to yield interpretable data, otherwise
(b) it needs data collection from extended period of time.

Neither of these conditions is satisfied in the proposal.

Such limits to be established require:

(a) an adequate data base and
(b) parametric studies of the anticipated vibration mode.

Neither of these conditions is satisfied in the proposal.

Therefore, the staff does not believe that a thermal shield monitoring program based on excore measurement of neutron noise can be established for SONGS 1 under the present conditions."

RESPONSE

Introduction

Vibration monitoring of the reactor internals using neutron noise techniques is a well established methodology that has been used extensively by Westinghouse and the industry in general. Baseline determination and detectability is part of the technique and can be used for reactor operating with any structural damage, as well as in reactors with limited damage, such as SONGS 1. The proposed monitoring plan follows the program phases recommended in Reference 5 which reflects current industry practices. Specific answers to NRC concerns upgrading baseline and detectability are given below. These comments are in addition to the details given previously when the program was proposed.

The present condition of the thermal shield support blocks and flexures has been inferred from inspection results obtained during the present outage. The initial monitoring data acquired should reflect this condition of the program. Analysis results indicate that the plant can operate safely with the thermal shield in the present condition and further can operate safely in the postulated worst credible case condition as defined in Section 7.3, "Vibration Analysis for Worst Credible Degraded Case," of WCAP 12148 (Reference 1). It should be stressed that the intent of the monitoring program is to detect changes in neutron noise and loose parts signals that might reflect further degradation relative to the present condition.

Baseline

Industry Practice

Baseline determination is recommended in the present ANSI/ASME Standard (Reference 3), "data shall be collected at the beginning of the first fuel cycle and, at a minimum, after every significant modification of the reactor internals"...."data should also be acquired prior to the removal of the core barrel and prior to anticipated significant modifications of the core or internals, as an aid in interpreting subsequent baseline data." As explained above, the technique is based on monitoring changes of the signals. No specific demand is given for a long term baseline data base. In recognition of the difficulties faced by the data analyst to separate the effect of burnout from the real vibration trend, the draft (not published) of the latest revision of the ANSI standard recommends that the baseline be established for new reactors over several fuel cycles until the equilibrium is reached. For plants in operation when the program begins, the baseline is established by taking measurements over one cycle, which the SONGS 1 program also proposes. Furthermore, the standard recommends taking data every three months of operation and at the beginning and end of each cycle.

As described below, the SONGS 1 program will take data much more frequently to support the data base and to watch for changes since some damage of the support bolts has been observed. The baseline established from the initial data will reflect the current condition of the thermal shield. As indicated by analyses reported in WCAP 12148, parametric studies have been performed to calculate thermal shield vibration for postulated further degradation relative to the expected present condition.

Summary

To summarize, the neutron noise monitoring program is to detect changes relative to the present condition of the thermal shield which is based on inspection results and correlation with analysis. The baseline data will therefore consist of data acquired during the first 45 days of effective full power operation.

Detectability Limits

Industry Experience

As discussed in Section 10 of WCAP 12148 and supplementary information supplied (attached as Appendix B), thermal shield vibrations have been detected using the neutron noise technique. In addition to the Westinghouse experience on neutron noise monitoring previously forwarded to the NRC and attached as Appendix B, others in the industry have performed studies to support monitoring of thermal shields and using the neutron noise technique to detect vibration during plant operation. This includes work performed on French plants (Reference 4), St. Lucie Unit 1 (Reference 5), and Ft. Calhoun (Reference 6) plants as discussed below. Analytical and scale model studies have been performed in France to determine the changes in flow induced vibration of a thermal shield due to degradation of the supports. A clearly different response is shown when the support conditions change, for example, the failure of two flexures.

Internals natural frequencies sensed by the neutron noise technique in St. Lucie Unit 1 were related to natural frequencies calculated for the undegraded and degraded conditions. For example, the frequency of a n=2 shell mode peak that changed from 7.5 Hz to about 5 Hz corresponded to calculated n=2 shell mode frequencies for the undegraded and degraded conditions. In addition, a small peak that "could correspond" to a natural frequency calculated for thermal shell beam mode is also identified in the data for the degraded condition. In this work, neutron noise data provided interpretable results for degradation subsequent to "loss of effectiveness of the positioning pins."

In studies for the Ft. Calhoun reactor, changes in the n=2 shell mode natural frequency were suggested for monitoring thermal shield support conditions on the basis that calculated natural frequencies for the undegraded and degraded conditions differ by 3.6 Hz for an n=2 shell mode detected in the neutron noise data.

These results provide a general basis for expecting that changes in thermal shield vibration can be detected using the neutron method to be employed in the SONGS 1 monitoring program. Information specific to SONGS 1 is discussed below.

SONGS 1 Program

It is recognized that a long term baseline does not exist for the SONGS 1 plant. The long term baseline, although certainly useful, is not considered necessary for the SONGS 1 case since the program is intended to monitor for changes from the present condition. The SONGS 1 program consists of a frequent and detailed review of the data and a cautious interpretation of detected changes. Initial data will be acquired every other day for the first 8 days to establish the variation in the center frequency of peaks and the rms amplitudes that can be expected in the data. Subsequent data to be acquired on a weekly basis will be reviewed for changes that exceed these variations, trends in frequency or amplitude changes including effect of burnout or sudden changes. If changes judged to be significant occur, the data will be reviewed by a committee with representatives from Westinghouse, CE and SCE. If the opinion of the committee is that the changes indicate significant thermal shield support degradation, the observations will be reported to the utility management and the NRC for further action as outlined in the proposed licensing amendment DPR-13-207 Rev. 0, as revised in the draft of Enclosure 2 to this submittal.

Initial data and data collected during the first 45 calendar days of 90% power operation or 90 days from restart will be analyzed and interpreted based on previous experience with neutron noise and correlation with analysis results as discussed in Section 10, "Monitoring Program," of WCAP 12148. The duration and power requirements were selected to assure the neutron noise data baseline does not contain transient responses from initial power ascent. From this work and the experience gained in the 45 days of monitoring, criteria for changes deemed to reflect significant thermal shield support damage will be established. If these changes are exceeded, the data will be reviewed by the committee mentioned above. If the opinion of the committee is that the cause of the changes reflects a significant change in thermal shield vibration, SCE will report the situation to the NRC within 24 hours and will identify actions to be taken within 30 days. (Note: SCE has proposed a change to License Condition 3.M requiring plant shutdown should the last flexure be demonstrated failed. See Enclosure 2 of this letter for changes to the License Condition).

SONGS 1

Inspection results have shown that one flexure is intact. The plant has operated for 60 to 68 months with one flexure intact (pages 3-3 and 3-4 of WCAP 12148). Parametric analyses have been performed and correlated with observed damage. The parametric analysis also include cases for postulated further degradation. In the following, the changes in thermal shield vibration indicated by the analysis results are utilized to consider the detectability of further degradation. The calculated natural frequencies of the core barrel and thermal shield and the average rms vibration amplitudes of thermal shield modes at ex-core detector locations for several case are listed in Table 1. Inspection results and correlation with analysis results indicate that the present condition of the thermal shield is Case 103 (i.e., one flexure intact, no amplitude limitation at the keys -- all assumed worn, 3 of the 6 support blocks with no degradation). The plant can operate safely in the postulated worst case condition, Case 000 (remaining flexure broken, no amplitude restriction at the keys and all bolts broken). The difference between Cases 103 and 000 are used to consider the detectability of further degradation. Comparison of these two cases indicates:

- A change in thermal shield beam mode from 14 Hz natural frequency and a very small (< 0.2 mil rms) amplitude at the detector elevations to approximately 2.5 Hz natural frequency and a 24 and 50 mil amplitudes at the lower and upper detector elevations, respectively.

- Approximately .4 Hz decreases in thermal shield n=2 shell mode natural frequencies. The amplitudes of these modes are calculated to increase by approximately 50% of the average of the detector locations.

- Approximately 0.6 Hz increases in the core barrel beam mode natural frequencies.

These results indicate that the appearance of the thermal shield beam mode is the best indicator of further degradation and that detection may be supported by changes in the thermal shield shell modes. In addition, other changes in the signal content could occur as a result of changes in the vibratory behavior.

In the following, the neutron noise levels corresponding to the calculated thermal shield beam mode amplitudes are estimated and are compared with partial neutron noise data acquired on SONGS 1 prior to the present outage. Data were acquired for lower detector sections at 45 Deg. and 135 Deg. azimuthal locations. Data for the 135 Deg. detector is used since there is uncertainty in the scale factor for the 45 Deg. detector. Taking the thermal shield beam mode amplitudes for Cases 003 and 000, the rms neutron noise signal levels and PSD levels for an arbitrary frequency band are:

Case	Lower Detector Location	Calculated rms T. S. Beam Mode Amplitude (mils)	Frequency Band Hz	PSD(hz^{-1})
003	135 Deg.	12	3.5-5.5	2.0 x 10-7
000	135 Deg.	26	1.5-3.5	9.6 x 10-7

For the above amplitudes and for 60% of the above amplitudes (the nominal percentage force for no bolt failures during hot functional testing).

The PSD levels, for the above amplitudes and for 60% of the above amplitudes nominal percentage force for no bolt failures during hot functional testing, superimposed on the SONGS 1 135 Deg. detector data indicate levels significantly greater than the measured level for the available data. The above provides an indication that degradation to the postulated worst case condition will be detectable.

The intermediate case of failure of the flexure without any further degradation of the bolts (Case 003) results in thermal shield beam modes at 3 to 5 Hz (Table 1). Although the thermal shield beam mode amplitude is lower for this case and the calculated natural frequencies are similar to the shell mode natural frequencies, indications of thermal shield degradation should be observed by the appearance of a peak with beam mode phase characteristic in the data and a trend of increasing amplitude before the postulated worst case condition is reached. Although the full amplitudes of these responses may not occur immediately after the degradation occurs because of amplitude limitation at the keys, the results indicate that an initial, partial response should also be detected.

Accelerometers mounted on the reactor vessel flange will also support monitoring of the thermal shield. SCE plans to perform tests to determine the sensitivity of these accelerometers for detection of increases in loose parts activity. In addition, data in Reference C show that increases in peak accelerations of reactor vessel mounted accelerometers accompanied thermal shield degradation.

Summary

In summary, if degradation to the worst possible case occurs, the analysis results indicate that changes in the thermal shield vibration will be detectable by neutron noise and, in addition, reactor vessel accelerometer data will also be used as a second method for monitoring for degradation.

Additional Information Requested by NRC in March 14 Meeting

The location and orientation of the neutron source range detectors are as follows: Fission chamber detector #1205 is located at 45 Degrees, uncompensated ion chamber detector #1206 is located at 90 degrees, fission chamber detector #1207 is located at 225 degrees. Fission detectors #1205 and #1207 are opposite pairs. (See attached drawing #567974 for additional details). The detectors are fission chambers and uncompensated ion champers with a sensitivity of 3 x 10-3 amp/nv with a range of 0-200% full power. Boron lining inside the ion chamber enables detection of neutrons.

The fission chambers and uncompensated ion chambers are aligned with the axial center line of active core (for channels 1205 and 1207, the detectors shared with the IR channels are the lower detectors).

Conclusion

The discussion above does not intend to over-simplify the interpretation of a neutron noise signal. The objective is to show that sufficient studies and analyses have been made to allow the utility to perform surveillance to monitor for degradation of the thermal shield by periodic measurements, and to support understanding of changes in vibration response and, as a result, to support the conclusions of the analysis. (Note: At the March 14 meeting, the NRC requested information for Case 100. This information can be found as Appendix C to this enclosure).

Table 1

Summary of SONGS 1 Thermal Shield Vibration Assessment

Natural Frequency (Hz)

CASE	Beam Modes				Shell Modes	
	CB	CB	TS	TS	TS N=2	TS N=2
146	6.5	6.7	13.2	--	9.7	7.6
106	6.5	6.7	12.9	--	6.2	7.4
105	6.6	6.7	14.0	--	5.1	7.4
104	6.6	6.7	13.8	--	4.4	6.8
103	6.6	6.7	13.8	--	4.3	4.9
102	6.6	6.7	13.2	--	4.1	4.7
003	7.6	8.7	5.2	3.7	3.9	4.7
000	7.3	7.3	2.4	2.5	3.8	4.6

Average RMS Vibration Amplitudes of Thermal Shield Beam Modes at the Approximate Locations of the Ex-Core Detectors (mils)

	Thermal Shield Beam Modes		Thermal Shield Shell Modes	
	Upper Detectors	Lower Detectors	Upper Detectors	Lower Detectors
104	< 0.2	< 0.2	24	13
103	< 0.2	< 0.2	32	16
003	14	11	42	21
000	50	24	49	24

000

- number of undamaged support blocks
- number of unworn keys
- number of intact flexures

CB: Core Barrel

TS: Thermal Shield

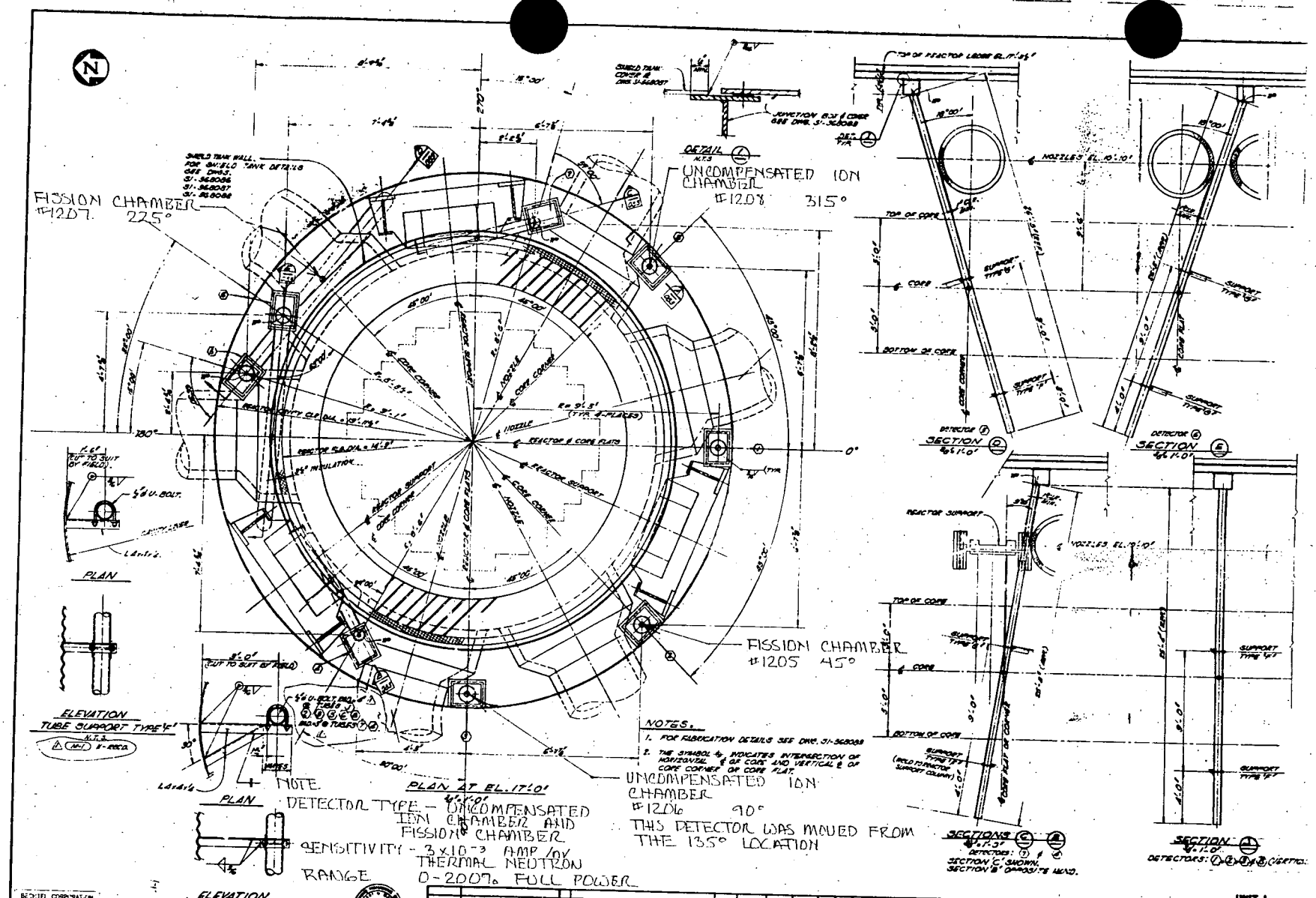
FISSION CHAMBER #1207 225°
UNCOMPENSATED ION CHAMBER #1208 315°
FISSION CHAMBER #1205 45°
UNCOMPENSATED ION CHAMBER #1206 90°
THIS DETECTOR WAS MOVED FROM THE 135° LOCATION
DETAIL
PLAN
ELEVATION TUBE SUPPORT TYPE 'G'
PLAN AT EL. 17'-0"
SECTION
NOTES.
1. FOR FABRICATION DETAILS SEE DWG. 31-563088
2. THE SYMBOL ⊕ INDICATES INTERSECTION OF HORIZONTAL ℄ OF CORE AND VERTICAL ℄ OF CORE CORNER OR CORE FLAT.
NOTE.
DETECTOR TYPE - UNCOMPENSATED ION CHAMBER AND FISSION CHAMBER
SENSITIVITY - 3x10⁻³ AMP/nv THERMAL NEUTRON
RANGE 0-200% FULL POWER
UNIT 1
REACTOR STRUCTURE
REACTOR CAVITY
DETECTOR TUBE ARRANGEMENT
567974-1

SC-10. "Describe the design of the repair that would be performed on the thermal shield components considering the known damage."

RESPONSE

In spite of the similarities between Haddam Neck and SONGS 1, the Haddam Neck repair cannot be applied to SONGS 1. Some of the key factors that need to be addressed to determine the optimum repair include:

- SONGS 1 uses a thinner thermal shield which resulted in different vibration amplitudes and limiter key loads than at Haddam Neck. This difference may impact design and mounting of the supplemental displacement limiter keys.

- The flexures had been previously removed from Haddam Neck whereas they are still mounted on SONGS 1. The need to remove these flexures and install the displacement limiters at these locations versus installing the displacement limiters at other locations must be investigated. This decision potentially affects adequacy of the fix, number of limiters required, duration of the repair and radiation exposure.

- The difference in seismic levels for SONGS versus Haddam Neck may impact the design of the supplemental displacement limiters. This has to be investigated.

- Since SONGS 1 is a 3 loop plant and Haddam Neck is a 4 loop plant, the differences in the internals configuration may affect locations and design of the limiters. Detailed evaluations are needed to determine the optimal design.

Deferral of the repair allows time to adequately plan the operation so that steps can be taken to minimize radiation exposure and economic impact. Since the program developed supports repair deferral, based on the analysis results and use of monitoring programs, efforts will be ongoing during the Cycle X operation to develop the optimum repair required.

In conclusion, it is premature to speculate about the repair that will be implemented until a sufficient evaluation of the various alternatives has been performed.

Enclosure 1 References

References:

1) "Engineering Evaluation of the SONGS 1 Thermal Shield Supports," Westinghouse Report WCAP 12148, February, 1989

2) "Elastic-Plastic Analysis of Blunt Notched CT Specimens and Applications," W. K. Wilson, Journal of Pressure Vessel Technology.

3) ANSI/ASME Part 5, OM-1987, Operation and Maintenance of Nuclear Power Plants, "Inservice Monitoring of Core Support Barrel Axial Preload in Pressurized Water Reactors."

4) J. C. Carre, et. al., "Malfunction Tests and Vibration Analysis of P.W.R. Internals Structures," SMORN V, Munich, Germany.

5) B. T. Lubin, R. Longo, T. Hamel, "Analysis of Internals Vibration Monitoring and Loose Parts Monitoring System Data Related to the St. Lucie 1 Thermal Shield Failure," SMORN V, Munich, Germany.

6) J. W. Quinn, C. J. Sterba and J. A. Stevens, "The Use of Ex-core Neutron Noise at Near Zero Reactor Power to Monitor Thermal Shield Support Integrity," SMORN V, Munich, Germany.

04040

Appendix A

Effects of Postulated Dropped or Tilted Thermal Shield on San Onofre Unit 1

Accident Analysis

(Overall Concern 1)

APPENDIX A

EFFECTS OF POSTULATED DROPPED OR TILTED THERMAL SHIELD ON SAN ONOFRE UNIT 1 ACCIDENT ANALYSIS

1.0 BACKGROUND

An inspection of the San Onofre Unit 1 (SONGS 1) thermal shield was performed during the Cycle X refueling outage. This inspection revealed degradation of several bolts used to attach the thermal shield and the six thermal shield support blocks to the core barrel. Southern California Edison (SCE) plans to repair the thermal shield at the end of Cycle 10. Analyses have been performed by Westinghouse which demonstrate that even with the thermal shield support system in a degraded condition, the thermal shield will remain in place through Cycle 10. These analyses have been presented to the Nuclear Regulatory Commission (NRC) Staff. The NRC Staff has raised questions with regard to the effects of a postulated dropped or tilted thermal shield on the results of the accidents analyzed in Chapter 15 of the SONGS 1 Updated Final Safety Analysis Report (UFSAR). The purpose of the following discussion is to address the concerns of the Staff in this area.

2.0 BASIS

It is the position of SCE and Westinghouse that the SONGS 1 thermal shield will remain in place for Cycle 10, even in a fully degraded condition (i.e., failure of all bolts on all six support blocks). Thus, dropping or tilting of the thermal shield during Cycle 10 is considered an extremely low probability event. In addition, if dropping of the shield would occur, this event would not initiate a transient. Furthermore, Southern California Edison has installed loose parts and neutron noise monitoring to monitor possible thermal shield degradation, such that it is highly unlikely that a dropped or tilted shield would go undetected. On this basis, the postulation of a shield dropping or tilting undetected and the further postulation of an accident or transient with the shield in a dropped position is considered an incredible event.

Nevertheless, in order to respond to the NRC Staff's questions, a review of the effects of a dropped or tilted thermal shield on the SONGS 1 UFSAR Chapter 15 events was performed. In most cases, the calculated hydraulic effects (pressure drop, flow redistribution) of the repositioning of the thermal shield were reviewed as to the possible effect on the accident analysis results. These effects were compared with available margins in existing accident analyses in order to demonstrate that adequate margin exists in the current analyses. In the case of the large break loss-of-coolant accident (LOCA), the worst limiting break was re-analyzed to determine the effect on the results and compared with available analysis margins.

The two cases reviewed were as follows:

1. The thermal shield remains intact and in its normal location; however, it is tilted to one side.

2. The thermal shield drops vertically and rests on the four reactor vessel radial supports (radial keys) without tilting.

The discussions in the following sections address the calculations performed to model the hydraulic effect of the shield tilting or dropping in normal operation followed by the assessment of the impact to the non-LOCA and LOCA accident analyses. In normal operation and all accident analyses, the assessment concluded that sufficient margin would be available to offset the penalty due to repositioning of the thermal shield for the cases analyzed.

3.0 EFFECT ON PRIMARY SYSTEM FLOW OF DROPPED OR TILTED THERMAL SHIELD

OBJECTIVE

To determine the effect on the total vessel pressure drop and total vessel flow for the postulated event in which the thermal shield drops vertically down onto the radial keys. Figure 1 provides a sketch of the barrel/vessel downcomer region for this postulated event. A detailed approach for the effect on primary system flow of dropped or tilted thermal shield is given in Attachment A-1.

METHOD

A dropped thermal shield will result in an increase in the flow blockage area at the entrance to the lower plenum and as a result fluid velocities entering the lower plenum will be higher. The increase in the lower plenum loss coefficient due to a dropped thermal shield was determined by calculating the local losses from the radial keys to a location in the lower plenum which corresponds to the original designed inlet flow area. This is the only region in the downcomer-lower plenum region whose losses will change significantly as a result of a dropped thermal shield. The loss coefficients (primarily expansion losses) in this region were calculated and then added into the overall lower plenum loss coefficient. This data was then used as input into SCE hydraulic flow models which included the dropped shield configuration to determine the vessel pressure drop and flow. Calculations were also performed for the as-designed configuration so the effect of the dropped thermal shield could be established.

RESULTS

The results of these calculations were that the total vessel pressure drop increases by 4.6% and the total vessel flow is reduced by 450 GPM/Loop as a result of a dropped thermal shield at SCE. It is important to note that although the actual vessel flow is reduced, there is margin between the best estimate and thermal design flow values and thus the present thermal design flowrate value of 65000 GPM/Loop can be maintained even with a dropped thermal shield.

Natural Circulation Considerations

As a percentage of total flow, a dropped thermal shield has a smaller effect at natural circulation conditions than it has at nominal conditions. The reasons are twofold:

1) The dropped thermal shield results in a slight increase in the irreversible hydraulic loss coefficient at the radial keys. The total flow resistance of the loop, however, depends not only on this loss coefficient, but the sum of all loss coefficients in the loops. Some of these loss coefficients are frictional in nature, and have a stronger Reynolds number dependence than do the irreversible loss coefficients, (e.g., the loss coefficient due to the dropped thermal shield). Consequently, the increases in overall loop loss coefficient due to a dropped shield is a smaller percentage of the total loop loss coefficient at the low Reynolds numbers characteristic of natural circulation. This is true because the overall loop loss coefficient has been increased for those individual loss coefficients which do increase at low Reynolds numbers (e.g., core, steam generator).

2) At natural circulation conditions, the dependence of the loop flow on overall loop hydraulic resistance is weaker than at nominal conditions. Therefore, a perturbation in the overall loop hydraulic loss coefficient has a smaller effect.

The minor effect on overall loop hydraulic resistance is considered insignificant for the natural circulation flow calculated in the safety analysis (loss of normal feedwater/station blackout). For these reasons, the assessment already performed on the effect of a dropped thermal shield on the FSAR transients is considered to be conservative.

4.0 OVERALL EFFECT OF DROPPED OR TILTED THERMAL SHIELD

As discussed in Section 3, the major effects of the repositioning of the shield is a change in the pressure drop or flow resistance in the downcomer (tilted case) or lower plenum (dropped case) and in the dropped case, a change in the core inlet flow distribution. In both cases, the thermal design flow, which is the reactor coolant system flow rate at which the accidents are analyzed, remains unchanged. The dropped case was determined to be the most limiting since there is a greater change in flow resistance and because of the resulting change in core inlet flow distribution. This case was used in the assessment of the effects on normal operation and the accident analyses.

A summary of effects of the dropped thermal shield is given below:

a) Core inlet flow redistribution

   7% decrease in peripheral fuel assemblies flow
   6% increase in inner fuel assembly flow

b) Delta-P increase of 1.25 psi in lower plenum at normal operating flow conditions.

c) No effect on total core flow.

d) No effect on reactor coolant system fluid temperatures.

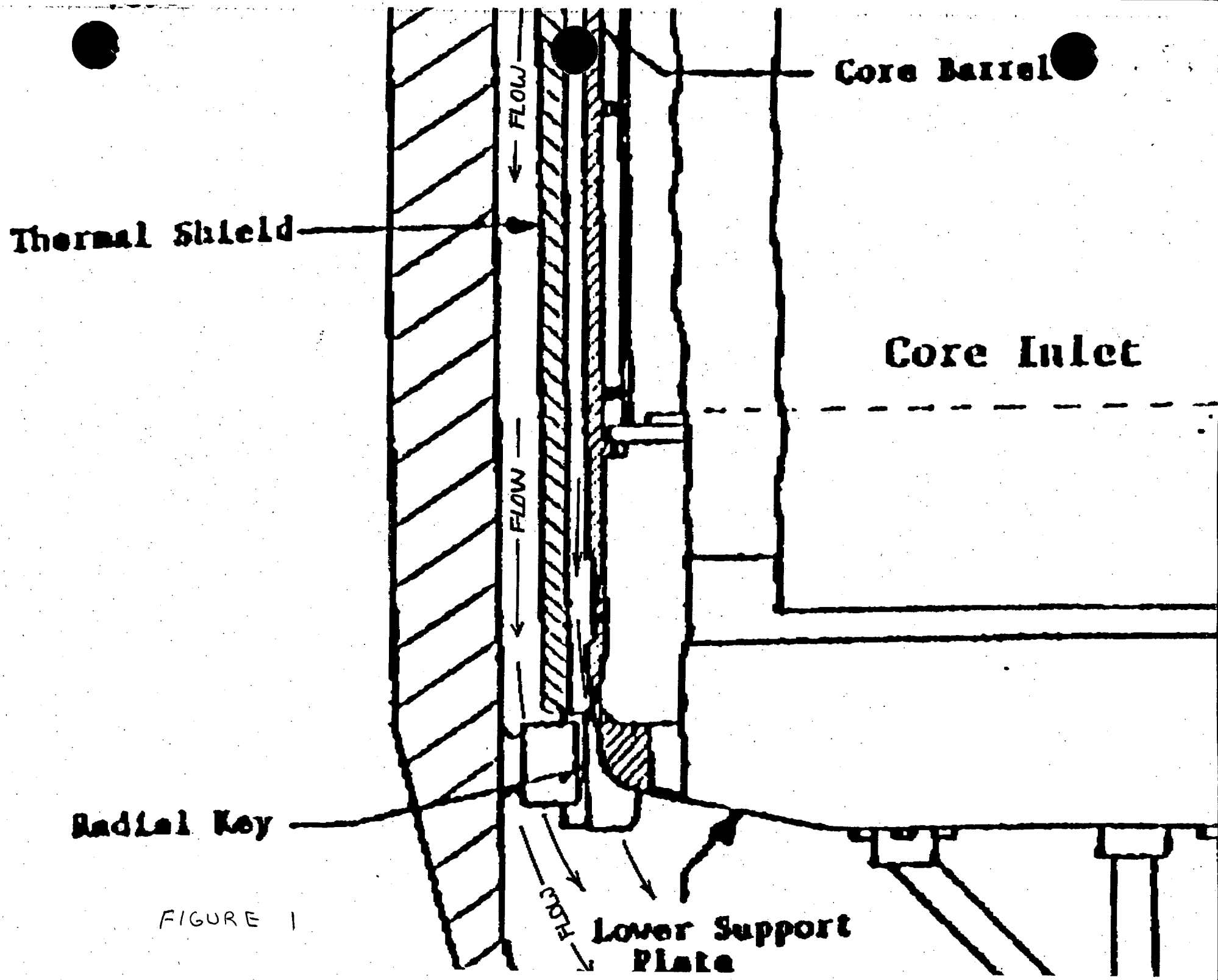
Core Barrel
FLOW
Thermal Shield
Core Inlet
FLOW
Radial Key
FLOW
Lower Support Plate

FIGURE 1

e) Insignificant impact on the gross response of the reactor core including reactivity feedback.

f) No effect on reactor trip on engineered safety features functions.

g) No effect on ability of control rods to scram.

Thus, the only effects which need be considered in the accident assessment are the localized flow effects in the core and the increase in lower plenum pressure drop. Although total core flow is unchanged, the dropped thermal shield may result in a flow redistribution in the core inlet. As a result, the inlet flow to some fuel assemblies at the core periphery decreases by 7% and it was necessary to investigate the effect of the dropped shield on the departure from nucleate boiling ratio (DNBR) in the core in normal operation. In order to perform a conservative assessment of the effect on DNBR, no benefit of flow increase to the center assemblies was considered and no credit for flow redistribution up the core was taken. Instead, a 7% decrease in flow was taken to the inlet to all fuel assemblies. A DNB margin assessment showed that sufficient margin exists in normal operation such that core limits are not violated for normal operation.

5.0 EFFECTS OF DROPPED SHIELD ON SONGS 1 UFSAR CHAPTER 15 ACCIDENT ANALYSIS

In response to questions by the NRC Staff, assessments have been made with respect to the effect of the dropped thermal shield on the accident analyses in Chapter 15 of the SONGS 1 UFSAR. The accidents are grouped as non-LOCA and LOCA transients. The non-LOCA transients are further grouped based on the acceptance criteria used in the accident analysis. In several of the FSAR non-LOCA accidents, since the modeling of the transient and the acceptance criteria depend only on gross RCS conditions (total core flow, system pressure, etc.) the results are unaffected by the presences of the dropped shield. In the case of accidents with fuel or clad temperature or DNBR acceptance criteria, further assessments were performed to estimate the effect of the dropped shield.

5.1 Non-LOCA Transient Analyses

The following is an assessment of the core inlet flow maldistribution on the SONGS 1 UFSAR Chapter 15 non-LOCA transients. The non-LOCA review was based on the current SONGS 1 safety analysis combined with available sensitivity studies and engineering studies performed for SONGS 1 and for other plants. In the case of many of the transients, detailed SONGS 1 specific calculations were not performed. The assessment is based on Westinghouse experience in transient analysis and knowledge of the SONGS 1 design. This assessment applies to SONGS 1 Cycle 10 at reduced T_{ave}.

5.1.1 Non-LOCA Transients Unaffected by Core Inlet Flow Maldistribution

In many of the UFSAR Chapter 15 non-LOCA transients, the analysis is independent of flow distribution in the core.

These analyses depend upon the overall response of the core in the form or its power/reactivity transient since these analyses evaluate criteria which are external to the core (e.g., containment temperature and pressure response and decay heat removal capability). These analyses are not adversely affected by the core inlet flow maldistribution caused by a dropped thermal shield since they depend on the gross response of the core and the RCS and because no change in the safety analysis value of the initial conditions including the Technical Specifications value of the RCS flowrate (i.e., the RCS Thermal Design Flow is not impacted by the core inlet flow maldistribution).

Therefore, the assessment concludes that the core inlet flow maldistribution caused by the dropped thermal shield presents no penalty associated with the acceptance criteria of these events.

Analyses in this category are listed below:

- Loss of Normal Feedwater/Station Blackout (decay heat removal)
- Feedline Break (decay heat removal)
- Boron Dilution (Modes 3-6) (operator response time with respect to losing plant shutdown margin)
- Steamline Break Mass/Energy releases (temperature and pressure response of inside and outside containment)
- Steam Generator Tube Rupture

5.1.2 Non-LOCA Transients with Primary or Secondary Side Pressure Acceptance Criteria

The core inlet flow maldistribution affects regions within the core and potentially affects those transients which have acceptance criteria related to the core regions. Peak RCS pressure and peak secondary side pressure are unaffected by the conditions created by the core inlet flow maldistribution. There would be no change in the safety analysis value of the initial conditions including the Technical Specifications value o the RCS flow. There is no impact on the system heat transfer capability.

Thus, the assessment concludes that the peak RCS and secondary side peak pressures safety analysis acceptance criteria would continue to be met for the core inlet flow maldistribution caused by the dropped thermal shield.

Transients in this category are the following:

- o Loss of Load/Turbine Trip
- o Loss of Normal Feedwater/Station Blackout
- o Loss of Flow
- o Uncontrolled RCCA Bank Withdrawal at Power

5.1.3 Non-LOCA Transients with Fuel/Cladding Temperature Acceptance Criteria

The core inlet flow maldistribution results in slightly higher temperatures in the core regions where the maldistribution causes a reduction in core flow. This results in a slightly reduced capability to remove heat from the fuel and clad in these regions. The methodology in these analyses assumes that a DNB condition occurs immediately at the initiation of the transient when evaluating the peak fuel/cladding temperatures to show that the core remains in place and in a coolable geometry. Since the methodology assumes that DNB occurs immediately, the heat transfer coefficient used in relatively insensitive to the expected changes in coolant bulk temperature and flow rate.

Based upon available sensitivities presented in Reference 1, the reduced core flow in the affected regions due to the core inlet flow maldistribution is expected to result in an insignificant change to the peak fuel/cladding temperatures. There is more than sufficient margin to accommodate the expected slight increase in peak fuel/cladding temperatures.

Therefore, the assessment concludes that there is sufficient margin available to accommodate the expected slight penalty in peak fuel/cladding temperatures for these events due to the core inlet flow maldistribution.

The analyses in this category are:

- o RCCA Ejection
- o Locked Rotor

5.1.4 Non-LOCA Transients with DNBR Acceptance Criteria

The postulated condition of a dropped thermal shield in the San Onofre Unit 1 pressure vessel will cause an adverse core inlet flow distribution. This has been calculated to give a 7% lower flow to the peripheral fuel assemblies and a 6% higher flow to the center fuel assemblies. DNBR evaluations were performed using a bounding assumption of 7% flow reduction to all fuel assemblies in the core. The results showed that the core thermal safety limits remain unchanged and that the limiting DNB transients not protected by core thermal safety limits meet the design bases during Cycle 10 operation.

The DNBR evaluations were performed using the following assumptions, where applicable:

1. Thermal design flow is based on the actual average steam generator tube plugging level (15.2%) rather than the Cycle 10 design basis of 20%.

2. The Cycle 10 limiting axial power shape was used.

3. Engineering hot channel factors were based on as-built fuel data.

4. A value of F^N_{DH} with 8% uncertainty was used based on the Cycle 10 peak rod.

No "best estimate" assumptions are used in the DNBR evaluation. The penalty due to flow reduction is offset by utilizing Cycle 10 core conditions and the thermal design flow based on the current actual tube plugging level at SONGS 1.

The preceding analysis is conservative since complete flow recovery is expected to occur at 30-40% core elevation. The corresponding DNBR penalty is expected to be of the order of a few percent. This is consistent with past analysis such as the detailed analysis of the RCS flow anomaly which occurs for some four loop plants (Reference 2), and the THINC-IV analyses in Reference 3 which showed DNBR penalties of the same magnitude.

Thus, the conclusion of the DNBR evaluation is that core thermal safety limits are met and adequate DNB margin exists to offset the effects of the dropped thermal shield, using Cycle 10 core conditions and the thermal design flow corresponding to the actual steam generator tube plugging level at SONGS 1.

The above evaluation addresses the following SONGS 1 UFSAR Chapter 15 transients:

- Uncontrolled Bank Withdrawal from Subcritical
- Loss of Flow
- Steamline Break Core Response
- Dropped Rod
- Startup of an Inactive Loop
- Boron Dilution (Modes 1 and 2)
- Uncontrolled Bank Withdrawal at Power
- Loss of Load/Turbine Trip
- Addition of Excess Feedwater
- Large Load Increase

5.1.5 Conclusions Regarding Non-LOCA Transient Analyses

Based on the above assessment, it was concluded that adequate margin exists in the current SONGS 1 Non-LOCA transient analyses to accommodate the effect of a dropped thermal shield. In some transients it is necessary to utilize Cycle 10 specific conditions and actual tube plugging levels at SONGS 1 in order to meet DNBR limits.

5.2 Loss of Coolant Accidents (LOCA)

5.2.1 Large Break LOCA

As discussed previously, the hydraulic effect of a dropped thermal shield resting on the four radial keys is an increase in the lower plenum pressure drop for normal operation of 1.25 psig. For the postulated large break LOCA, an increase in the lower plenum hydraulic resistance could affect the thermal-hydraulic blowdown and reflooding behavior of the reactor coolant system.

An increase in the hydraulic resistance in the lower plenum flow path could affect the blowdown depressurization response by altering the core flow characteristics. A change in the fundamental information concerning the dynamic environment in the core, such as the core mass flow rates, would then alter the results of the fuel rod core cooling analysis. To assess the effect of this postulated scenario, a large break LOCA analysis was performed for SONGS 1.

5.2.1.1 Effect of a Dropped Thermal Shield on the Large Break LOCA Analysis

Recently, a large break LOCA analysis was performed for SONGS 1 using the Westinghouse IAC large break LOCA ECCS Evaluation Model to support operation with an equivalent level of steam generator tube plugging of up to 20% in any steam generator for the reduced temperature program (Reference 4). The analysis resulted in a peak cladding temperature of 2260.3°F at a total core peaking factor of 2.78 for the double ended cold let guillotine break (DECLG) with a discharge coefficient of CD=0.8.

An increase in resistance in the lower plenum could affect the calculated peak cladding temperature by altering the core flow rates and changing the time at which the core flow makes the transition from positive flow up through the core to negative flow down through the core. To assess the effect, the limiting CD=0.8 DECLG case was re-analyzed assuming that the thermal shield at SONGS 1 had dropped onto the radial keys without tilting prior to the initiation of the hypothetical LOCA. The hydraulic loss coefficient input for the lower plenum in the blowdown analysis model was modified to result in an increase of 1.25 psi for the initiation of the hypothetical LOCA analysis. The analysis assumes that there is no alteration in the thermal shield configuration which would affect the flow or pressure loss distribution after the LOCA is initiated.

The results of the analysis indicated that there was a slight increase in the mass flow rate during the positive core flow period, almost no change in the time at which the core flow makes a transition from positive to negative, and a slight decrease in the negative core flow rate. Overall, this resulted in a slight increase (3.4°F) in the peak cladding temperature.

This increase in the peak cladding temperature result is not significant since there is still ample margin (36.3°F) between the analysis result and the licensing limit of 2300°F.

5.2.1.2 Conclusions for Large Break LOCA Analysis

The limiting large break LOCA case was re-analyzed for the postulated scenario in which the thermal shield at SONGS 1 drops onto the radial keys without tilting prior to the initiation of the LOCA.

The analysis results indicate that the dropped thermal shield has only a small effect on the in core flow rates calculated by the Westinghouse IAC ECCS Evaluation Model during blowdown, which translated to only a very small adverse effect on the peak cladding temperature response of the fuel rods.

It is concluded that operation of SONG 1 during Cycle 10 with a degraded thermal shield support system would not result in exceeding the licensing limit for the postulated scenario during a hypothetical LOCA event.

5.2.2 Small Break LOCA

The effect of the dropped thermal shield on the small break LOCA is to increase the lower plenum pressure loss.

Since the small break LOCA transient is primarily dominated by the gravity driven mixture level elevation head effects, an increase in the lower plenum hydraulic loss coefficient is expected to have an insignificant effect on the transient response, except for periods in which the mass flow rates are high. For ECCS design basis small break LOCA analyses the lower plenum to core mass flow rate remains low except during the initial periods of loop seal steam venting.

5.2.2.1 Evaluation of the Potential Effect of a Dropped Thermal Shield on the Small Break LOCA Analysis

The limiting small break analysis peak cladding temperature (PCT) for SONGS 1 occurs for the 4-inch break case with a PCT of 864.17°F. This PCT occurred during the loop seal clearing process. This is true for all of the small breaks analyzed. This is due to the very high safety injection (SI) flow rate to power ratio for SONGS 1. Based on the SI flow to power ratio, the PCT is expected to occur during the loop seal clearing process for all small break LOCAs for SONGS 1 which would result in uncovering of the reactor core.

An increase in resistance in the lower plenum flow path will affect the loop seal clearing process. The vessel mass distribution during and after the loop seal clearing process may be substantially affected by the increased resistance. However, soon after the loop seals clear, the SI should recover the core (if it is uncovered) and maintain a coolable geometry.

The PCT during the loop seal clearing process is governed by the depth and duration of the core uncovery. The depth of core uncovery during the loop seal clearing process could be reduced due to the higher resistance. As the core mixture level is depressed, mass must flow from the core region through the lower plenum to the downcomer. Higher resistance could impede this flow and reduce the depth of the loop seal uncovery. The higher resistance could also impede the flow from the downcomer back into the core shortly after the loop seals begin venting steam, thus delaying the core recovery. Since the depth and duration of core uncovery are important parameters in the fuel rod and cladding heat up calculations, the resultant PCT for the higher resistance case could increase or decrease since it is not known if the benefit from the reduction in the depth of core uncovery or the penalty due to increase duration of the core uncovery is more significant. However, any increase in PCT should not be significant compared to the margin that exists between the analysis result (864.17°F) and the licensing limit (2300°F) which is greater than 1400°F.

5.2.2.2 Conclusions for Small Break LOCA Analysis

Therefore, it is concluded that no licensing limit will be exceeded as far as small break LOCA is concerned if the thermal shield support system fails and the thermal shield drops into the assumed configuration prior to the initiation of a small break LOCA.

6.0 OVERALL CONCLUSIONS

An assessment of the effects of a postulated thermal shield failure on the SONGS 1 UFSAR accident analysis was performed. The limiting scenario analyzed was the thermal shield dropping and resting on the four radial keys without tilting. The conclusion of the assessment is that sufficient margin is available in all safety analyses to accommodate the effects of the dropped thermal shield for SONGS 1 Cycle 10 and the current actual level of steam generator tube plugging.

7.0 REFERENCES

1. Risher, D. H., "An Evaluation of the Rod Ejection Accident in Westinghouse Pressurized Water Reactors Using Spatial Kinetics Methods," WCAP-7588, Revision 1, December 1971.

2. Garner, D. C., et. al., "RCS Flow Anomaly Investigation Report," WCAP-11528 (Proprietary), WCAP-11847 (Non-proprietary), April 1988.

3. Hochreiter, L. E., and Chelemer, H., "Application of the THINC-IV Program to PWR Design," WCAP-8054 (Proprietary), WCAP-8195 (Non-proprietary), September 1973.

4. Skaritka, J., "Reload Safety Evaluation San Onofre Nuclear Generating Station, Unit 1 Cycle 10, Revision 1," March 1989.

Attachment A-1

OBJECTIVE

To determine the affect on core inlet flow maldistribution for the postulated event in which the thermal shield at SCE drops vertically down onto the radial keys. Figure 1 provides a sketch of the barrel/vessel downcomer region for the as-designed configuration and for this postulated event.

METHOD

Flow maldistribution effects due to a dropped thermal shield were determined by using data from the 1/7th scale model test for SCE as a basis. An empirical calculational model was set up and the 1/7th scale model data for the as-designed condition were used to determine a set of empirical coefficients that were used also for the dropped thermal shield case. Calculations were performed assuming that , for the first half of travel to the vessel center, the flow behaves like an expanding jet and then for the second half, Bernoulli pressure recovery governs. The increased pressure changes for the dropped thermal shield case were then determined and the center and peripheral relative flow rates were recalculated. A description of these steps in the methodology follows:

1) For the Region Near the Radial Keys (0-45 Degrees)

The flow exiting the downcomer at the radial keys will act like a sudden expansion. That is, there will be a jet whose interaction with the quiescent fluid will occur through a free shear layer. Because of the drag caused by this shear, the jet will slow down and expand. Conservation of fluid momentum in a jet requires that the pressure vary as:

$$\Delta p = \rho u_o^2 \frac{b_o}{b}\left[1 - \frac{b_o}{b}\right]$$

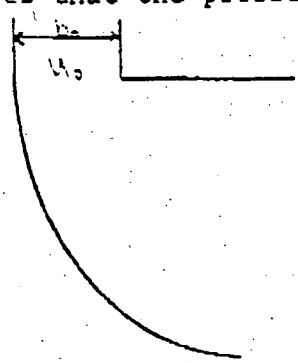

Jet expansion rates are typically 0.1 inch/inch. Therefore the value of "b" can be calculated from:

$$b = b_o + (0.1)\left(\frac{\pi}{4}\right)(r)$$

where b_o = initial jet width at the downcomer exit.

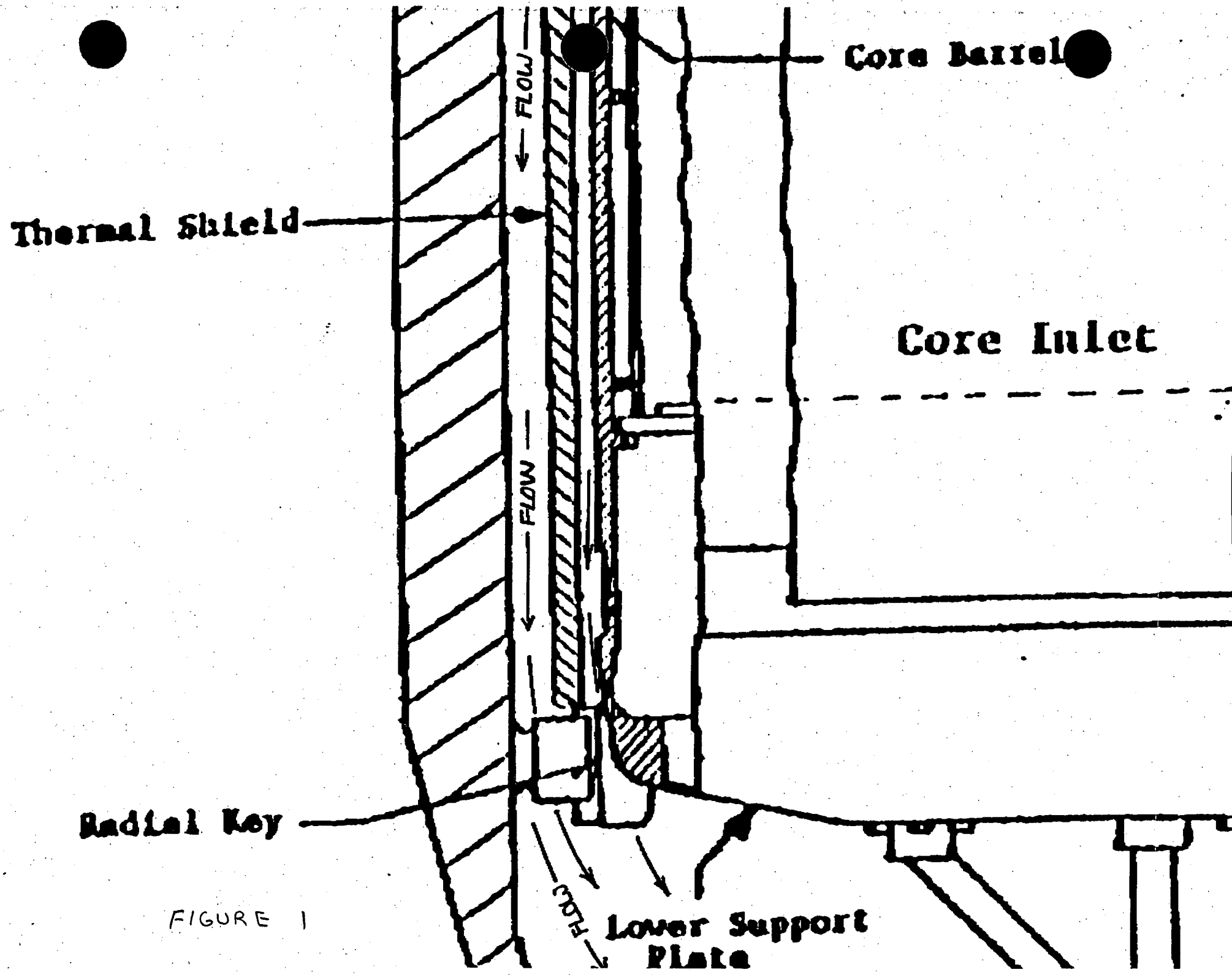
Core Barrel
FLOW
Thermal Shield
Core Inlet
FLOW
Radial Key
FLOW
Lower Support
Plate

FIGURE 1

2) Vessel Center Region (45-90 Degrees)

At a point between the downcomer exit and the vessel centerline, the flow will begin to act like the flow approaching a stagnation point. This is because all the flow exiting the downcomer flows toward the center of the lower plenum, where it must turn. While the velocity does not truly go to zero at the lower plenum centerline (except at the bottom of the vessel), it is conservatively assumed to do so.

Therefore, the radial pressure difference is maximized and can be obtained from:

$$p + \rho \frac{v^2}{2g} = \text{Constant}$$

3) Centrifugal Effects

The curvature of the bottom head will produce pressure gradients which will tend to increase the pressure on the head relative to the origin of the radius of curvature. While the effect of this on center versus peripheral assemblies is difficult to assess, the effect can be conservatively addressed by adding the total centrifugally induced pressure onto the centerline pressures. This will maximize the difference between centerline and peripheral inlet plenum pressures.

4) Combined Centerline-Pheripheral Pressure Differences

The combined centerline to pheripheral pressure difference was obtained by adding the pressure differences due to:

a) the jet expansion from step #1
b) the Bernoulli pressure recovery from step #2
c) the Centrifugal effects from step #3

The centerline to peripheral pressure differences were calculated to be 1.08 psi and 4.47 psi for the as-designed and dropped thermal shield case, respectively.

5) Core Inlet Flow Maldistribution

The previous steps have described how the radial pressure difference between the centerline and outside of the lower plenum is conservatively calculated for the nominal and dropped shield cases. The next step is to translate this into a centerline-to-peripheral fuel assembly flow maldistribution. The means for performing this estimate is: a) to define an empirical relationship between fuel assembly flow fraction and driving pressure(s) which is consistent with well-known turbulent flow hydraulic behavior, and b) to use test data to define the empirical constants in this relationship. The relationship can then be used to calculate the maldistribution for the dropped shield case, as well.

In turbulent flow, the relationship between flow velocity and driving pressure is typically quadratic, i.e. the driving pressure is proportional to the square of the flow velocity. In the core of a nuclear reactor, the primary driving pressure is the fuel assembly pressure drop DP_{FA} Letting Q_i represent the flow fraction in the ith fuel assembly, this relationship says that:

$$Q_i^2 \sim C_1 DP_{FA} \qquad (1)$$

where C_1 is a constant of proportionality. In the above equation, DP_{FA} should be considered as a core averaged value. Because of the radial pressure difference in the lower plenum, DP_{LP} there is an additional driving pressure at the fuel assembly inlet. Consequently, the more complete relationship between flow fraction and driving pressure is given by:

$$Q_i^2 = C_1 DP_{FA} + C_2 DP_{ri} \qquad (2)$$

where DP_{ri} = radially induced inlet pressure at the ith fuel assembly. The constant C_2 is a proportionality constant which accounts for the influence of the inlet pressure on the overall fuel assembly flow. Since the interest here is primarily in the centerline and peripheral fuel assemblies, which see the extremes of the overall lower plenum radial pressure gradient, then:

$DP_{ri} = +DP_{LP}/2$ for centerline assemblies

$DP_{ri} = -DP_{LP}/2$ for peripheral assemblies

The final relationship is therefore:

$$Q_i^2 = C_1 DP_{FA} \pm C_2 (DP_{LP}/2) \qquad (3)$$

where a plus sign is used for centerline assemblies and a minus sign for peripheral assemblies. Figure 2 shows scale model test data for the core inlet flow fractions. Using the average of 13 center assemblies and 28 peripheral assemblies, the following flow fractions are obtained for the nominal case.

Average flow fraction of center assemblies = 1.01
Average flow fraction of peripheral assemblies = 0.98

By inserting each of these values in Equation 3, along with DP_{FA} and DP_{LP}, two equations for the unknown parameters are obtained. By solving these equations, C_1 and C_2 are obtained. These are then used in Equation 3, together with the dropped shield value of DP_{LP}, to calculate the flow distribution with a dropped shield. The results are:

Average flow fraction of center assemblies = 1.06
Average flow fraction of peripheral assemblies = 0.93

RESULTS

The core inlet flow to the peripheral assemblies (28 locations) will be 7.0% lower while the flow to the center assemblies (13 locations) will be 6% higher than the average for a postulated event in which the thermal shield at SCE drop vertically onto the radial keys.

Figure 2

********* NORMALIZED FLOW DISTRIBUTION *********

Peripheral Assemblies

Center Assemblies

					1.02	0.94	0.80						
			1.08	1.01	0.99	0.99	1.02	0.94	0.98				
		1.06	1.03	1.09	0.	1.02	0.98	0.99	0.98	0.99			
	1.00	1.04	1.08	0.96	1.00	0.99	0.97	1.02	0.98	0.99	1.09		
1.01	1.05	1.02	1.00	0.97	0.97	1.02	0.99	1.02	0.88	1.08	1.05	0.98	
1.02	1.09	1.09	1.10	1.00	1.00	1.08	0.96	0.87	1.05	0.99	0.96	1.00	
0.96	1.01	0.95	0.98	0.88	1.02	0.99	1.01	0.96	1.02	0.95	1.04	1.04	0.98	0.
0.91	0.96	0.94	0.96	0.95	0.98	1.05	0.99	1.09	1.00	1.00	1.01	0.96	1.05	1.04
0.91	1.01	1.01	1.03	1.02	1.00	1.03	0.98	0.98	1.03	1.06	0.99	1.01	0.95	1.00
	0.99	1.03	1.02	1.06	0.96	1.01	0.99	1.07	1.04	0.93	1.02	1.01	1.02	
	0.93	0.99	1.05	0.99	1.01	1.07	1.05	1.02	1.02	0.91	0.96	1.02	0.94	
		0.95	1.00	1.04	1.00	0.78	1.03	1.00	1.00	1.05	1.08	1.10		
			1.00	1.04	1.03	1.00	1.03	1.01	1.03	1.01	1.01			
				0.87	1.00	0.99	1.05	0.97	0.97	1.02				
						0.92	1.02	0.92						

Appendix B

Internals Vibration Monitoring Using Neutron Noise

(Additional Information for SC-9)

APPENDIX B

(Additional Information From Specific Question #9)

INTERNALS VIBRATION MONITORING USING NEUTRON NOISE

1) Neutron Noise Technique

The core barrel and thermal shield vibrate in beam and shell modes. Core barrel beam and shell mode shapes are illustrated in Figure 1. The shell modes can have various shapes. The dominant shell mode, n=2, has an oval shape as shown in Figure 1. Beam and shell modes have been detected by treatment of the ex-core power range flux detector signals.

The neutron flux signal is composed of a DC component and a fluctuating or noise component as illustrated in Figure 2. The noises component includes content that reflects internals vibrations. As shown in Figure 1, motion of the core barrel changes the downcomer water gap. This results in changes in the signal level of the ex-core detectors. Frequency spectra of the signals show peaks associated with the vibration modes of the internals. Beam modes can be distinguished from shell modes by the phase differences between cross-core detector pairs; the phase difference for beam modes is 180 degrees, the phase difference for shell modes is 180 degrees.

Small motions of thermal shields have been detected using the neutron noise technique. Figure 3 shows in the ex-core neutron noise data from a Westinghouse plant with a thermal shield supported at both ends. The peak centered on approximately 12 Hz has been identified as a shell mode (1). N=2 shell modes of the thermal shield have been identified at 11.2 and 11.7 Hz in a similar plant by accelerometer measurements made during the preoperational vibration measurement program. The 11.7 Hz mode indicated an rms response on the order of 2 mils (2). The 11.1 Hz mode which was inferred to have antinodes near the ex-core detector azimuthal locations is also expected to have a similar mulitude, indicating that thermal shield motions on the order of 2 mils rms can be detected. This amplitude is a fraction of the calculated average rms shell mode amplitudes of the SONGS 1 thermal shield shell modes at the approximate locations of the detectors for both expected present conditions and postulated further degradation. The results from French plants (3) of Westinghouse design include detection of thermal shield n=2 and n=3 shell modes.

On the basis that thermal shield beam modes produce changes in relative annular water gaps similar to those of thermal shield shell modes, the thermal shield beam mode responses calculated with the flexure broken are also expected to result in neutron noise signal levels higher that those previously detected as discussed above. A discussion of the likelihood of detection of changes due to the failure of the remaining unbroken flexure is included in Section 10, "Vibration Monitoring," of WCAP 12149.

RESPONSE MODES

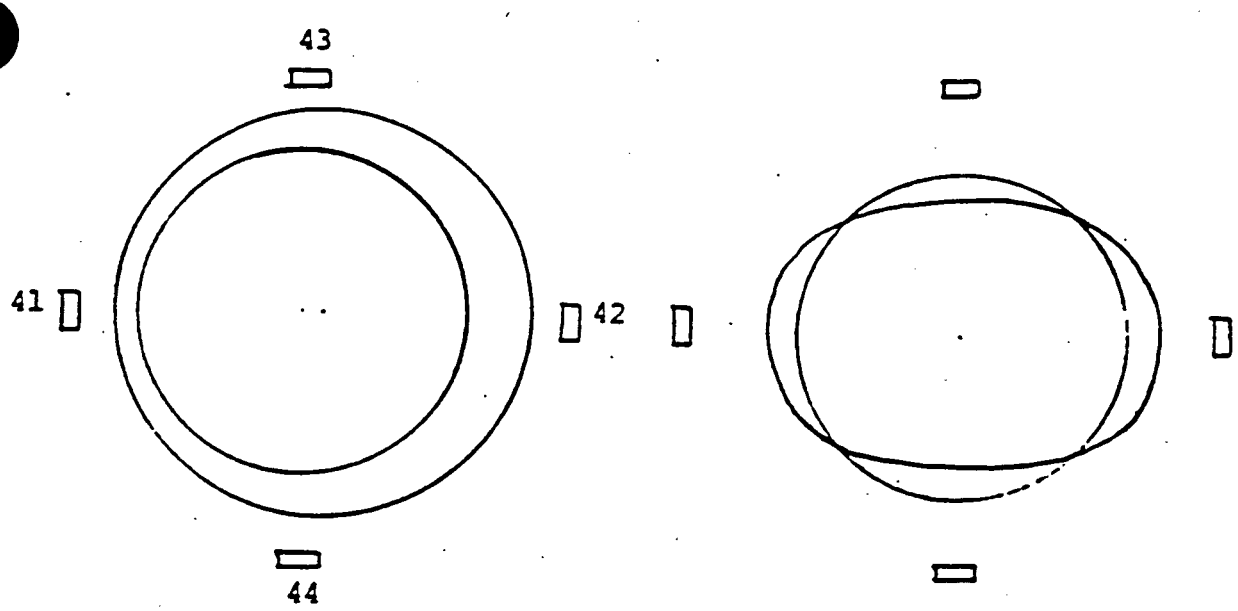

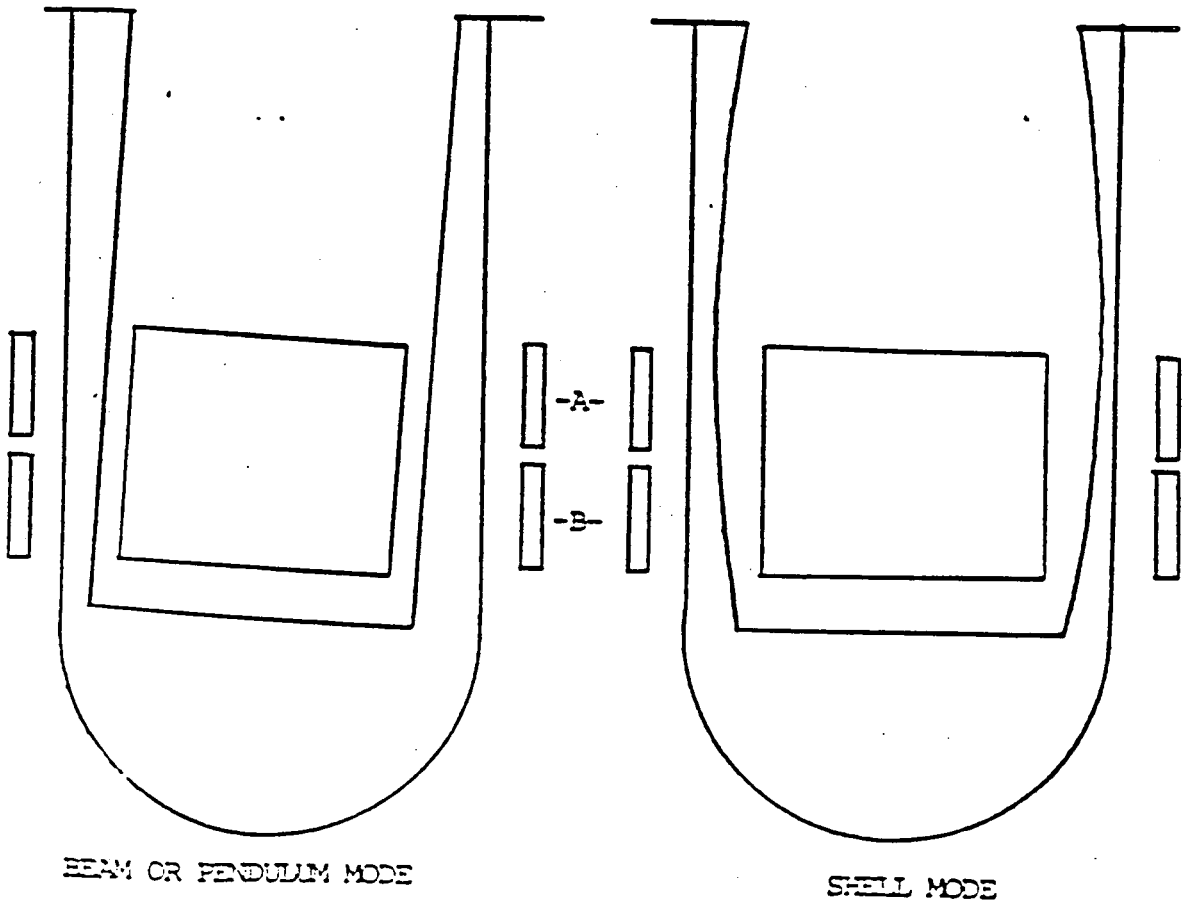

FIGURE 1

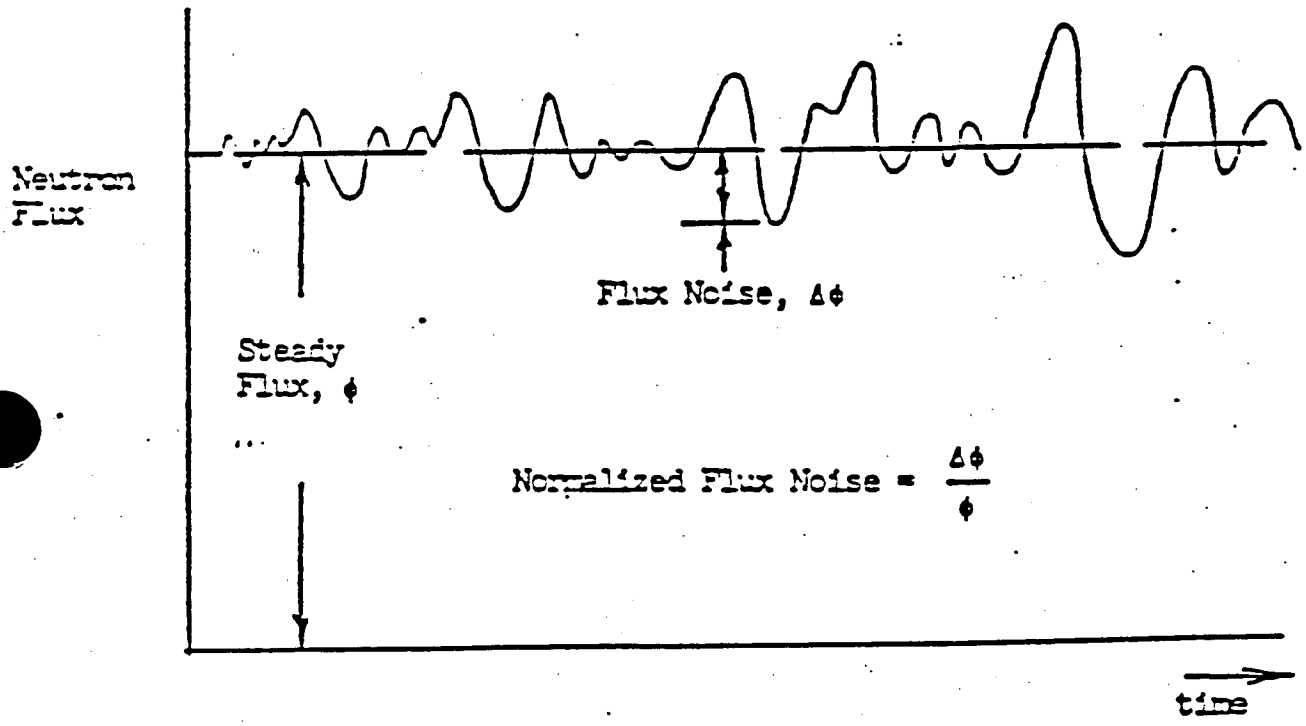
Neutron Flux
Flux Noise, Δφ
Steady Flux, φ
Normalized Flux Noise = Δφ/φ
time

FIGURE 2

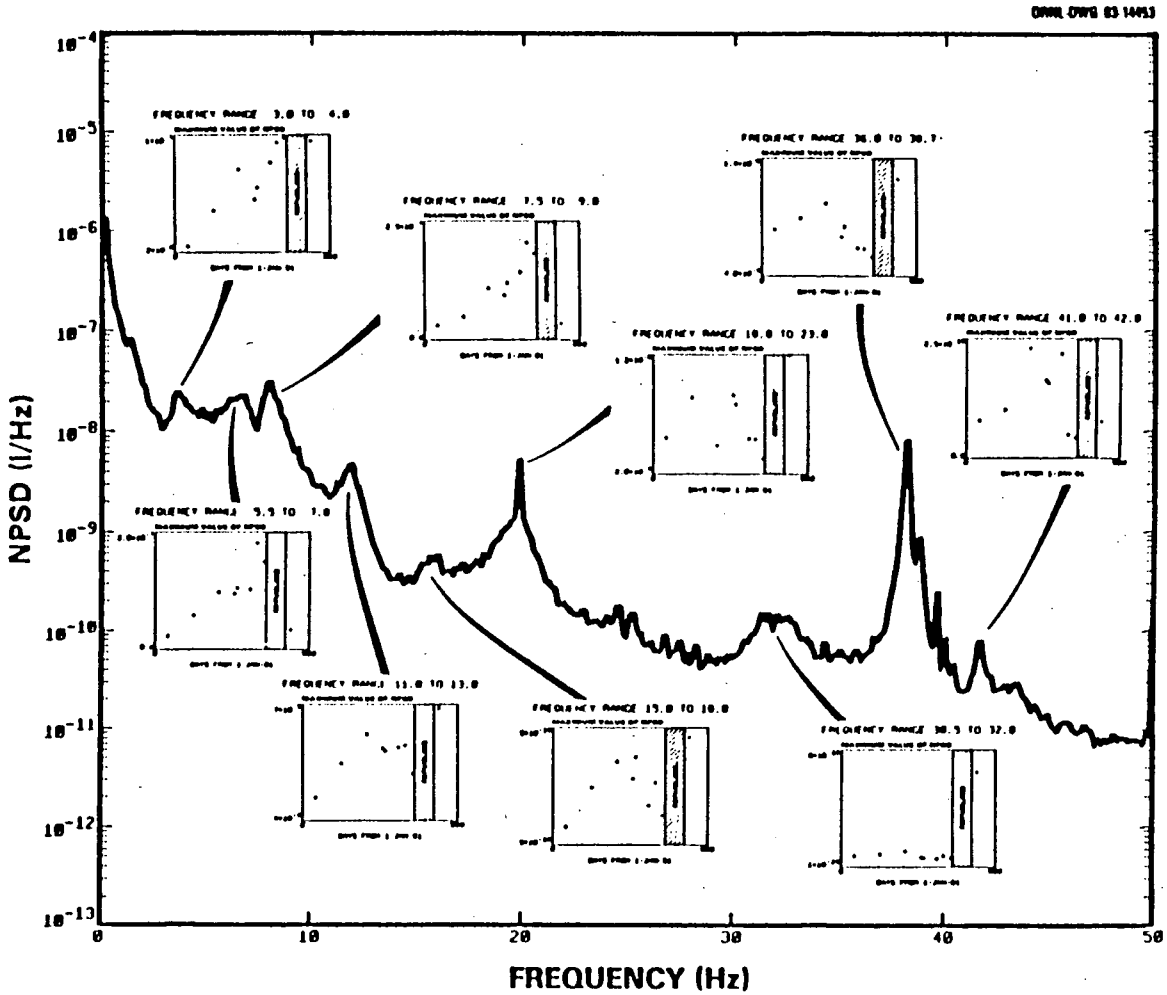

Fig. 34. Long-term variation in the amplitude of resonances in the Sequoyah 1 ex-core neutron noise spectrum.

(From D. N. Fry, J. March-Leuba and F. J. Sweeney, NUREG/CR-3303, ORNL/TM-8774

FIGURE 3

2) Past and Present Application of Neutron Noise Monitoring

The neutron noise technique was recognized more than a decade ago as a technique for monitoring reactor internals vibrations. Correlation between core barrel beam motion and neutron noise sensed by a strain gage was shown by Gopal and Ciaramitaro (4), and a correlation between accelerometers mounted on reactor internals and neutron noise was shown by Thompson, et. al. (5). Inadequate core barrel clamping force led to motions detectable by neutron noise in the Palisades plant (6). An ASME/ANSI standard (7) has been issued to monitor core barrel beam mode vibrations to detect loss of core barrel clamping force using the neutron noise technique. The SONGS 1 program will follow the basic phases of this program, baseline surveillance and diagnostic.

Extensive neutron noise monitoring has been performed on French plants (3) including 24 reactors with circular thermal shields and numerous plants without circular thermal shields. In addition, the neutron noise method has been used extensively on German reactors.

Examples of past uses of neutron noises are discussed in the following.

Westinghouse has supported the use of neutron noise to monitor for wedging of a loose part in the bottom of the reactor vessel. In this case, the natural frequency of the core barrel beam mode was monitored for changes. A change in natural frequency was detected following reinstallation of the core barrel after an in-service inspection. Analysis and additional data were acquired to diagnose the source of the change. Based on these results and the subsequent return of the natural frequency to prior values, it was concluded that the cause of the change was contact of the core barrel with a lower radial support due to the reinstalled position of the core barrel.

Westinghouse has also used the neutron noise technique to investigate the effects of a flow anomaly on internals vibration. This study included comparison of the natural frequencies of the internals of the plant studied to expected natural frequencies, and comparison of the responses during the occurrences of the anomaly to responses without the anomaly to show that the anomaly did not result in significant changes in core barrel vibration amplitude.

The above indicate that neutron noise is a recognized technique that has been useful for the study of reactor internals vibration. Neutron noise monitoring for thermal shield support degradation is also being performed in a Westinghouse plant. Following the repair of the thermal shield at the Haddam Neck Plant, an internals vibration monitoring program was implemented by NUSCO (8). Ex-core neutron noise data were acquired during the startup following the repair and during subsequent operation. Results from these data and further data to be obtained during the remainder of the cycle are used to monitor the thermal shield for changes in motion and to establish a baseline for long term monitoring.

References

1) D. N. Fry, J. March-Lauba and F. J. Sweeney, NUREG/CR-3303, ORNL/TM-8774.

2) N. R. Singleton, et al, "Four Loop Internals Assurance and Test Program," WCAP 9352, June, 1978.

3) C. Puyal, et al, "Use of Low Frequency Fluctuations for the Surveillance of Structures, Sensors and Thermohydraulic Phenomena on the 900 MW and 1300 MW Reactors," presented at SMORN V, October 1987, Munich, Germany.

4) R. Gopal and W. Ciaramitaro, "Experiences with Diagnostic Instrumentation in Nuclear Power Plants," Progress in Nuclear Energy, Vol. 1, pp. 759-779.

5) J. P. Thompson, et al., "Experimental Value of Ex-core Detector Neutron Noise to Core Barrel Amplitude Scale Factor," Transactions of the American Nuclear Society, 32 (1979), pp. 797-798.

6) J. A. Thie, "Core motion Monitoring," Nuclear Technology, Vol. 45, Mid August 1979, pp. 5-45.

7) ASME/ANSI OM-1987, Part 5, "In-service Monitoring of Core Support Barrel Axial Preload in Pressurized Water Reactors."

8) Haddam Neck Safety Evaluation. Evaluation of Thermal Shield Support Failure and Repair, SECL-87-568.

04090

Appendix C

Case 100

(Additional Information for SC-9)

APPENDIX C

QUESTION

Can neutron noise detect the condition where all blocks degrade but the last flexure remains intact (Case 100)?

ANSWER

The likelihood of detection by neutron noise is evaluated based on differences in thermal shield vibration indicated by analysis results between the degraded cases and the present condition as inferred from inspection results and analyses.

Since analysis and inspection results indicate degradation of the 0° and 240° blocks and possible the 300° block for the present condition, the analyses results for degradation to Case 100 are compared to the results for Cases 103 and 104 in the following:

Natural Frequencies (Hz)

Case+	Beam Modes			Shell Modes	
	CB	CB	TS	TS N=2	TS N=2
104	6.6	6.7	13.8	4.4	6.8
103	6.6	6.7	13.8	4.3	4.9
100	6.6	6.7	12.9	3.9	4.2

Average RMS Vibration Amplitudes of Thermal Shield Beam Modes at the Approximate Locations of the Ex-Core Detectors (mils).

Case+	Thermal Shield Beam Modes		Thermal Shield Shell Modes	
	Upper Detectors	Lower Detectors	Upper Detectors	Lower Detectors
104	<0.2	<0.2	24	13
103	<0.2	<0.2	32	16
100	0.7	1.7	44	22

These results indicate that for degradation from the expected present condition to Case 100:

- The thermal shield beam mode natural frequencies decrease by 0.9 Hz and the amplitudes increase but have a relatively low level.
- The thermal shield n=2 shell mode natural frequencies are reduced by approximately 0.5 Hz and the amplitude increases by 38% to 75%.

+ The case numbers are defined by XYZ where
  x = number of unbroken flexures
  y = number of unworn keys
  z = number of intact flexures

CB = Core Barrel
TS = Thermal Shield

Although the thermal shield beam mode might not be detectable because of the relatively small amplitude, the 38% to 75% increase in thermal shield shell mode amplitudes will be be detectable.

Enclosure 2

Proposed Supplement to

Amendment Application No. 165

3.M Cycle X Thermal Shield Monitoring Program

The neutron noise/loose parts detection system shall be used to monitor the condition of the reactor vessel thermal shield during Cycle X. Periodic monitoring of both neutron noise and loose-parts vibrations confirms that no long term unacceptable trend of degradation is occurring. The details of this program are described below.

(1) During the first 7 days of ≥90% power, interim acceptance criteria for neutron noise/loose parts monitoring will be developed. This interim criteria will be utilized until the final acceptance criteria is developed.

Final acceptance criteria for neutron noise/loose parts monitoring shall be established by performing baseline evaluations for 45 calendar days at ≥90% power following return to service for Cycle X operation.

(2) The neutron noise/loose parts monitoring system shall be OPERABLE in MODE 1 with:

a) At least two horizontal loose-parts detectors monitored for at least five (5) minutes each day; and,

b) at least three (3) neutron noise inputs monitored for at least five (5) minutes once a week.

(3) The data provided by the loose part/neutron noise monitor shall be analyzed once per week and compared with the established criteria. If the data exceeds the acceptance criteria:

a) Within 1 day the NRC will be informed of the exceedance.

b) Within 30 days the conditions will be evaluated and a report provided to the NRC documenting future plans and actions.

c) Shutdown should the remaining flexure be demonstrated failed.

(4) Each channel of the loose-part detection system shall be demonstrated OPERABLE in MODE 1 by performance of a:

a) CHANNEL CHECK at least once per 24 hours

b) CHANNEL FUNCTION test at least once per 31 days

The surveillance requirements for neutron noise monitor are covered by the Appendix A Technical Specification 4.1.1 for the Power Range Neutron Flux.

(5) With the neutron noise/loose-parts detection instrumentation inoperable for more than 30 days, prepare and submit a Special Report to the commission pursuant to Appendix A Technical Specification 6.9.2 within the next 10 days outlining the cause of the malfunction and the plans for restoring the system to operable status.

(6) In the case of a seismic event of 0.25g or greater as indicated on site sensors, loose parts/neutron noise monitoring will be conducted immediately and a controlled shut down shall be initiated. Before operations are resumed, it will be demonstrated that no thermal shield damage has occurred due to the seismic event.

(7) The provisions of Appendix A Technical Specification 3.0.4 are not applicable to this license condition.

04100