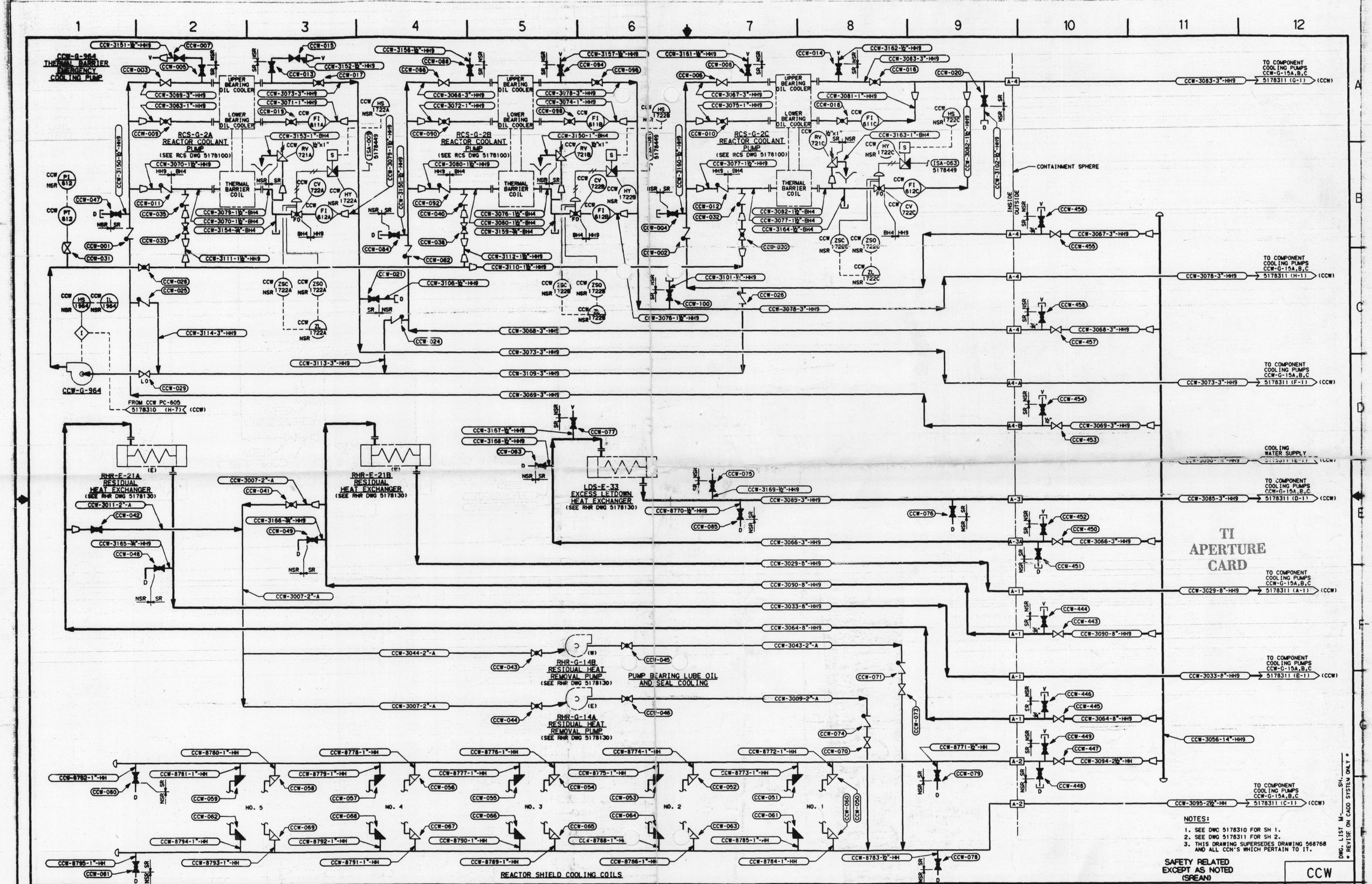

TI APERTURE CARD

NOTES:

1. SEE DWG 5178310 FOR SH 1.
2. SEE DWG 5178311 FOR SH 2.
3. THIS DRAWING SUPERSEDES DRAWING 568768 AND ALL CCN'S WHICH PERTAIN TO IT.

SAFETY RELATED EXCEPT AS NOTED (SREAN)

DWG. LIST M-____ SH.____
• REVISE ON CADD SYSTEM ONLY •

CCW

REFERENCE DRAWINGS	
5178000	P&I DIAGRAM LEGEND SH 1
5178001	P&I DIAGRAM LEGEND SH 2
5178002	P&I DIAGRAM LEGEND SH 3
450516	ELEM DIAGRAM-PUMP G-964
455449	ELEM DIAGRAM-CV-722A,B&C

NO.	REVISIONS	M	DATE	P.E.	QAE	SUPV	APPROVED	ENGR	CK'D	MADE	J.O.
0	ISSUED AS BUILT		3/28/84	DFM						BLS	8252

LOCATION: SAN ONOFRE NUCLEAR GEN. STA. UNIT 1

P & I DIAGRAM
COMPONENT COOLING WATER SYSTEM SHEET 3

SCE EDISON Rosemead California

SHEET NO. M

SCALE: NONE

____ OF ____ SHTS.

568768
11/18/83

5178312-0

8407310387

Southern California Edison Company

26X

MICROFILMED FROM