Southern California Edison Company

P. O. BOX 800
2244 WALNUT GROVE AVENUE
ROSEMEAD, CALIFORNIA 91770

M.O. MEDFORD
MANAGER, NUCLEAR LICENSING

TELEPHONE
(213) 572-1749

March 30, 1984

Director, Office of Nuclear Reactor Regulation
Attention: D. M. Crutchfield, Chief
Operating Reactors Branch No. 5
Division of Licensing
U. S. Nuclear Regulatory Commission
Washington, D.C. 20555

Gentlemen:

Subject: Docket No. 50-206
Systematic Evaluation Program Integrated Assessment
San Onofre Nuclear Generating Station
Unit 1

References: A. Letter, M. O. Medford, SCE, to D. M. Crutchfield, NRC, dated January 19, 1984

B. Letter, M. O. Medford, SCE, to D. M. Crutchfield, NRC, dated February 24, 1984

C. Letter, R. W. Krieger, SCE, to D. M. Crutchfield, NRC, dated March 4, 1984

The Reference A and B letters provided responses to the Systematic Evaluation Program open items. In each of the letters it was indicated that further information would be provided by March 5, 1984. The Reference C letter indicated that these responses would be provided by March 30, 1984. Enclosed with this letter are the responses to the following topics:

Topic	Title
II-3.A	Hydrologic Description
II-3.B.1	Capability of Operating Plants to Cope with Design Basis Flooding Conditions
III-1	Classification of Structures, Systems and Components
III-3.A	Effects of High Water Level on Structures
III-5.A	Effects of Pipe Break on Structures, Systems and Components Inside Containment
III-5.B	Pipe Break Outside Containment
III-7.B	Design Codes, Criteria and Load Combinations
VI-1	Organic Materials and Post Accident Chemistry
VI-4	Containment Isolation
VI-10.A	Testing of Reactor Trip System and Engineered Safety Features Including Response Time Testing

A035
1/1

VII-1.A Isolation of Reactor Protection System from Non-Safety Systems, Including Qualifications of Isolation Devices
VIII-3.B DC Power System Bus Voltage Monitoring and Annunciation
IX-3 Station Service and Cooling Water Systems

The program developed in response to Topic III-3.C, Inservice Inspection of Water Control Structures, was also expected to be submitted at this time. The program has been developed and must undergo formal review and approval. The final program developed will be submitted once this review has been completed by April 20, 1984.

If you have any questions or require additional information, please let me know.

Very truly yours,

R W Krueger for M.O. Medford

Enclosure

ENCLOSURE

Topic No.	Title
II-3.A	Hydrologic Description

Background

Reference 1 indicates that the design basis for ocean low water is not adequately described for San Onofre Unit 1. Reference 1 further recommends that the San Onofre Unit 1 low water design basis be established consistent with Reference 2. Reference 3 indicated that we would evaluate the applicability of Reference 2. The results of our evaluation are discussed below.

Discussion

Low water conditions identified in References 1 and 2 are as follows:

Extreme Low Stillwater Level	-2.63 ft. MLLW
Extreme Tsunami Drawdown	-12.3 ft. MLLW

Reference 2 also indicates that the extreme tsunami drawdown would persist for only a few minutes and would occur only under the improbable condition that all contributing influences occur and reach their limits simultaneously. These contributing influences include tides, winds, storm induced ocean level anomalies, and a design basis earthquake resulting in a design basis tsunami. Therefore, the low water levels identified above are based on extremely conservative conditions.

To evaluate the acceptability of San Onofre Unit 1 based on the low water conditions described above, we reviewed the capability of the ocean water intake and discharge structures to provide the plant with ocean water for plant operation during a low water condition.

Ocean Water Intake and Discharge Structure

The intake terminal structure is located 3,200 feet offshore and is connected to the plant by a 12-ft.-ID concrete conduit that is buried at least four feet beneath the ocean bottom. The top of the intake terminal is located at -16.5 ft. MLLW, with a one foot thick velocity cap for fish diversion purposes mounted four feet above the top of the intake terminal. Since the extreme tsunami drawdown would be -12.3 ft. MLLW, the intake structure would be covered with 4.2 feet of water which assures that the intake structure would be able to maintain a minimum water level in the plant intake pumpwell of -12.3 ft. MLLW.

The discharge terminal structure is located 2,600 feet offshore and is connected to the plant by a 12-ft.-ID concrete conduit. The top of the intake terminal is located at about -12 ft. MLLW, which would be 0.3 feet above the water level during the extreme tsunami drawdown of -12.3 ft. MLLW. Since the low water condition results in a reduced hydrostatic resistance to discharge due to the lower head of water above the discharge terminal structure, the ability to discharge water is not adversely affected by low water conditions.

The above discussion demonstrates that under the normal intake and discharge configuration, the extreme tsunami drawdown could result in a pumpwell water level of -12.3 ft. MLLW. However, during periodic heat treatments of the pumpwell, the roles of the intake and discharge structures are reversed. If an extreme tsunami drawdown is postulated to occur during a heat treatment, the discharge terminal structure, which would be serving as the intake, could be temporarily uncovered. However, since heat treatments are only performed for approximately two hours about every six to eight weeks, the chance of an extreme tsunami drawdown during a heat treatment is considered extremely remote. Even if an extreme tsunami drawdown does occur during a heat treatment, plant safety would be maintained since (1) the 2,600 feet of discharge conduit would be filled with water, a large portion available for plant use, and (2) since an extreme tsunami drawdown would last for only a few minutes, the discharge structure is expected to be recovered and the conduit refilled prior to depletion of ocean cooling water in the conduit. In addition, even in the extremely remote event in which the low water condition is postulated to result in an insufficient supply of ocean water, plant safety would be maintained as discussed below under the section "System Operation."

System Operation

Two plant systems utilize ocean water: the saltwater cooling (SWC) system and the circulating water (CW) system.

The safety-related saltwater cooling system consists of two 100% capacity trains, each with one pump, for providing cooling water for the component cooling water system. In addition, the two normal SWC pumps are backed-up by a 100% capacity non-safety related auxiliary SWC pump. The minimum acceptable intake pumpwell water level for SWC system operation was determined by reviewing the design specifications for the two normal SWC pumps and a calculation for the auxiliary SWC pump. The minimum acceptable low water level for the auxiliary SWC pump was determined to be -8.5 ft. MLLW. Since an extreme tsunami drawdown is postulated to result in a pumpwell level of -12.3 ft. MLLW, the auxiliary SWC pump would have insufficient suction for operation during the extreme tsunami drawdown. However, the auxiliary SWC pump is a non-safety related backup to the two 100% capacity safety-related SWC pumps, is non-seismically qualified and is not credited with being operable following the seismic event that initiates the tsunami. Therefore, loss of the auxiliary SWC pump does not result in unacceptable consequences. The minimum acceptable pumpwell water level for the two normal SWC pumps was determined to be -13 ft. MLLW. Since the extreme tsunami drawdown in the pumpwell is postulated to be -12.3 ft. MLLW, a sufficient water supply would be available for operation of the two normal SWC pumps.

The non-safety related CW system utilizes two pumps for providing condenser cooling water. Since the CW system is not required to be operable during emergency conditions, there would be no adverse impact to the plant if the CW system becomes inoperable due to low water conditions. However, operation of the CW pumps would result in additional pumpwell drawdown that could adversely impact operation of the SWC system during a tsunami low water condition.

Operation of the CW pumps during a tsunami low water condition will be prevented through administrative controls. For a predicted tsunami, ample time (several hours) is available, as currently specified in Abnormal Operating Instruction SO1-2.5-2, "Tsunami Warning," for operators to stop the circulating water pumps prior to arrival of the tsunami condition. For an unpredicted tsunami (locally generated by a seismic event), Abnormal Operating Instruction SO1-2.5-1, "Earthquake," will be revised to instruct operators to trip the CW pumps in immediate response to a severe earthquake.

Even if the tsunami low water condition is postulated to result in a loss of SWC, either by the low water occuring during heat treatment or as a result of operation of the CW pumps, unacceptable circumstances would not result. Operators would respond to the event by implementing Abnormal Operating Instructions SO1-2.4-1, "Loss of Saltwater Cooling System," and SO1-2.1-10, "Loss of Component Cooling Water System." These procedures essentially instruct operators to remove all heat loads from the component cooling water system, to maintain reactor coolant pump seal injection flow with the test pump, and to control pressurizer level and pressure with the pressurizer heaters, charging, and reactor coolant system cooldown. While these actions would require the plant to remain in Mode 3, this situation could be safely maintained until the SWC system is restored to operation.

Another situation of concern to this review is an extreme tsunami drawdown while the reactor coolant system (RCS) is being cooled by the residual heat removal (RHR) system. Previous evaluations have shown that if there is a total loss of SWC while the plant is on RHR, the component cooling water (CLW) system temperature limits will be exceeded. The time to exceed CCW system temperature limits depends on the residual heat levels at the time SWC is lost. We have estimated that a time period on the order of one day after going onto RHR is required before residual heat levels are low enough such that twenty minutes would be available after a loss of SWC before the CCW system temperature limits are exceeded. Therefore, for approximately one day after going on RHR, less than twenty minutes would be available for operator action to prevent CCW system heat-up following a loss of SWC. However, the chance of an extreme tsunami drawdown occurring during the first day after going onto RHR is extremely remote, especially since we anticipate going on RHR only two or three times per year. Even so, should this event occur, operating procedures instruct the operator to terminate RHR in order to reduce the rate of CCW system heat-up in the event of a problem with the CCW system.

Conclusion

As discussed above, Abnormal Operating Instruction SO1-2.5-1, "Earthquake," will be revised to instruct the operators to trip the CW pumps in immediate response to a severe earthquake. We plan to make this revision prior to startup. Based on the above discussion and administrative change, San Onofre Unit 1 is adequately described by and protected from the low water conditions identified in Reference 2. Therefore, this topic is closed.

References 1. January 31, 1983 letter from W. Paulson (NRC) to R. Dietch (SCE) forwarding the NRC Safety Evaluation Report on the SEP Hydrology Topics

2. Final Safety Analysis Report, San Onofre Nuclear Generating Station, Units 2 and 3, Section 2.4

3. January 19, 1984 letter from M. O. Medford (SCE) to D. M. Crutchfield (NRC)

GR:0874F

Topic No.	Title
II-3.B.1	Capability of Operating Plants to Cope with Design Basis Flood Conditions

In our January 19, 1984 letter to the NRC, it was indicated that the results of a review of the need for the tsunami gates for plant protection during a tsunami event would be provided by March 5, 1984. Based on our review, additional analysis will be necessary to resolve this topic. The analysis will consider not closing the tsunami gates during the design basis event, and estimate the extent of flooding if any on the plant site. The analysis will be completed by April 20, 1984.

Topic No.	Title
III-1	Classification of Structures, Systems and Components

In accordance with the commitment made in our January 19, 1984 letter to the NRC, an investigative search was conducted to retrieve additional design information applicable to the systems and components listed in Table 5-1 of Franklin Research Center (FRC) Report C5257-433. This was a limited effort and essentially focused on readily available information for filling out Tables A4-4 through A4-6 of the FRC report, as requested by the NRC. Most, but not all, of the information needed for Tables A4-4 through A4-6 has been retrieved. The less rigorous documentation requirements at the time San Onofre Unit 1 was originally designed were found to be a major factor affecting retrievability.

Based on the above experience, a rigorous development of the information requested under all eight open items in the June 25, 1982 NRC letter has been estimated to be very expensive. Consequently, we are studying different proposals for each of the eight open items to minimize the overall effort and still demonstrate the acceptability of the as-built components. Details on our program to be developed to resolve the remaining open items will be submitted by June 1, 1984.

Topic No.	Title
III-3.A	Effects of High Water Level on Structures

Background

Reference 1 indicated that ponding due to Probable Maximum Precipitation (PMP) on the fuel storage building and the ventilation equipment building rooftops could exceed the existing structural capabilities of these buildings. Reference 2 indicated that we would resolve this issue by either increasing rooftop drainage or by performing an evaluation to demonstrate that ponding due to PMP will have no adverse impact on plant safety. Reference 3 indicated that after further review, we had decided to resolve the rooftop ponding issue by performing an evaluation. The results of this evaluation are discussed below.

Discussion

The structural adequacy of the fuel storage building and ventilation equipment building rooftops were reevaluated based on guidance in Section 3.8.4, "Other Seismic Category I Structures," of the Standard Review Plan (SRP). Section 3.8.4 provides guidance concerning acceptable methods for the evaluation of extreme and severe environmental conditions, and allowable limits which constitute the structural acceptance criteria. While Section 3.8.4 specifically addresses evaluation methods for seismic and tornado events, the need to evaluate other environmental conditions such as flooding is also discussed. Since a PMP condition is considered to be a severe, if not extreme, environmental event, our evaluation utilized the SRP acceptance criteria for seismic and tornado conditions in the following manner (SRP Sections 3.8.4.II.3.c(ii)(b)(1) and (2), and 3.8.4.II.5.b):

$$D + P \leq 1.6\ S$$

where D = Dead Load
P = PMP Ponding Load
S = The required section strength based on the elastic design methods

The results of this evaluation demonstrate that both rooftops meet acceptable structural criteria for the PMP ponding condition.

Conclusion

Based on the structural adequacy of the existing rooftops of the fuel storage building and the ventilation equipment building during a PMP condition, this issue is closed.

References: 1. October 5, 1983 letter from R. W. Krieger (SCE) to D. M. Crutchfield (NRC)

2. January 19, 1984 letter from M. O. Medford (SCE) to D. M. Crutchfield (NRC)

3. February 24, 1984 letter from M. O. Medford (SCE) to D. M. Crutchfield (NRC)

GLRoche:1257F

Topic No.	Title
III-5.A	Effects of Pipe Break on Structures, Systems and Components Inside Containment
III-5.B	Pipe Break Outside Containment

In our January 19, 1984 submittal regarding these topics, we indicated that additional work would be done to resolve the remaining interactions from our previous reports. This work will rely to the extent practical on leak-before-break methods using existing leakage detection systems where possible. It was indicated that a schedule for performance of this work would be provided by March 5, 1984.

The fracture mechanics evaluations will depend, in part, on the completion of the seismic reevaluation of piping inside and outside of containment as a large part of the piping systems requiring additional analysis are currently included in that program. Though the short term criteria for these systems have been established, the long term criteria for these systems are yet to be determined. This will directly affect the leak-before-break analysis. Therefore, fracture mechanics analysis will necessarily follow the seismic analysis with a short lag. As the short term seismic analysis is scheduled to be completed prior to return-to-service, the schedule for the leak-before-break analysis will be submitted two months following return-to-service.

Topic No.	Title
III-7.B	Design Codes, Criteria and Load Combinations

Open Item

In our January 19, 1984 letter on this topic, it was indicated that the only remaining open item was the containment buckling issue. Specifically, it was indicated that in an attempt to resolve this issue we would search for acceptance criteria relevent to the particular San Onofre Unit 1 containment configuration. It was also indicated that in the event applicable acceptance criteria could not be identified, that the conservatisms of the LLNL report would be critically evaluated to determine acceptability.

SCE Response

A review of published data on buckling of spherical shells was undertaken to attempt to identify an allowable stress which could be applied to the San Onofre Unit 1 containment sphere. Although the exact configuration of the sphere was not found in the literature, much useful information was found. The references reviewed are indicated in the section "References." Some of this data is summarized below:

- Calculations were performed using Table 35, Case 22 of (2). These calculations showed that if the San Onofre Unit 1 containment was an "ideal" sphere, the critical buckling pressure would be 50.1 psi with a critical buckling stress of 21.0 ksi. The "probable actual minimum" critical pressure was calculated to be 15.1 psi with a critical buckling stress of 6.3 ksi.

- Calculations based on modeling the portion of the sphere in the transition zone as a cylinder, held round at both ends and subjected to a uniform external pressure, gave a critical buckling stress of 12.8 ksi ([2]) Table 35, case 19b).

- Per (4), "Spherical pressure vessels are very damage resistant; model tests having shown that tanks with a diameter of 37 meters can withstand a radial deformation of more than one meter without being ruptured." The tests referred to were for spherical LNG storage tanks with a required pressure thickness of approximately .40 inches, manufactured from Aluminum with $E = 10.0 \times 10^6$ psi and a Code allowable stress (at atmospheric temperature) of 10.0 ksi. The tests were performed to determine the effects of a collision between a ship and a barge carrying the LNG tanks.

- Much of the published data is for shallow spherical caps. However, "test data for deep spherical caps subjected to external pressure shows that the buckle is usually confined to a small area of the shell. Therefore, the area of the shell that participates in the buckle could be thought of as a shallow spherical cap." (12) Ref. (12) goes on to recommend the use of information based on shallow caps for deep caps.

- A review of the data in (5) shows that the stresses at buckling in spherical caps subject to local loads are much larger than the critical stresses due to external pressure. The maximum compressive membrane stresses under local loads were calculated using (2). These stresses were compared to the stress resulting from the Code critical buckling pressure for the specimens tested in (5). The cricial stresses due to local loads were much (from 10 to 80 times) larger than the stresses due to critical pressures. It is also noted that as the loads were applied over larger areas, the critical loads and stresses decrease.

Based on this review, it was not possible to find cases that were specifically applicable to the San Onofre Unit 1 containment which has its buckling stress resulting from postulated internal temperature acting on a unique configuration. However, based on the following discussion of the application of the Code, buckling will not occur.

Discussion of Potential for Buckling of SONGS 1 Containment Shell

In Lawrence Livermore National Laboratory's (LLNL) review of the San Onofre Unit 1 containment structural response (Reference 1), high compressive stresses were predicted in the circumferential direction at the base of the shell. The high compression zone results from the restraint of containment radial thermal growth by the concrete foundation and the sand-filled transition zone. The thermal expansion of the shell results from a postulated loss-of-coolant accident or pipe breaks inside containment.

The LLNL report recommends that we demonstrate a factor of safety against buckling due to this loading condition. We have reviewed the LLNL stress analysis and conclude that an adequate margin against buckling exists. This conclusion is based on the following points:

1. The compressive stress zone is localized with respect to the expected buckling pattern.

2. The sand transition zone stabilizes the shell against buckling.

3. The internal pressure concurrent with the high thermal stress stabilizes the shell against buckling.

Each point is discussed in more detail below.

1. Local Compressive Stress

Review of the thermal stress distribution predicted by the LLNL study (Figures 10 and 15 in Reference 1) shows that compressive stress is high through the sand transition zone and then drops off rapidly to zero a few feet above grade. The high compression is a result of the fixed boundary conditions at the concrete and the effectiveness of the sand in restraining the shell against radial expansion. Both of these effects are local ones and result from discontinuities at the shell boundary.

The ASME Code stress allowables for buckling are based on the assumption that the compressive stress acts uniformly over the entire shell. When the compressive stress zone is due to discontinuities, the Code recognizes that taking the maximum value of such localized stresses to act uniformly over the entire shell results in an overly conservative design. The Code allows averaging the membrane stresses over a distance $\sqrt{Rt}$ around the discontinuity and comparing this average stress to the allowables. This distance is the typical dimension used throughout the Code to define "local" effects on a shell. For buckling, the defination of "local" is more closely tied to the expected buckling pattern.

Special consideration of locally high compressive stresses recognizes the fact that the compressive region must be large enough to cover the expected buckled pattern. A shell structure can buckle in a number of different patterns - usually characterized by the number of waves in the circumferential and meridional directions (see Figure 1). Each pattern corresponds to a different critical stress level. Code allowables are then based on the lowest such critical stress. For a spherical shell with an (R/t)* ratio of 840, the buckling patterns corresponding to the lowest critical stress will probably have between 10 and 20 waves in the circumferential and meridional direction (see Reference 13 for analogous results on cylindrical shells).

Although the compession is uniform around the circumference (and therefore can easily cover the expected buckling pattern in this direction), the compression in the meridional direction acts over only a 5 degree span of the containment. A general rule-of-thumb is that the compressive stress must cover at least one half wavelength of the buckled pattern to generate that buckled pattern (see Reference 14). If it is assumed that one half wavelength of the buckling pattern is covered by 5 degrees, 24 waves are predicted for the containment (equivalent to 36 waves over a complete sphere). This buckling pattern has many more waves than the expected critical pattern and hence corresponds to a much higher critical stress.

* R is the shell radius (70 ft.), t is the shell thickness (1 inch).

This observation correlates with the qualitative observations in Reference 14 where a non-uniform axial distribution of circumferential compression leads to "considerably greater" buckling stresses than predicted for uniform compression.

Additionally, the fixed boundary condition at the concrete further limits the expected buckling pattern (see Figure 1). Since the shell has zero slope at the concrete, there must be greater distance away from the fixity for the buckling pattern to develop. Therefore, the effective zone over which a half wavelength of buckling can occur is even smaller and the corresponding buckling pattern requires even more waves and higher critical stresses.

In summary, to develop a buckled pattern within the short meridional distance over which the compression acts requires a buckling stress much higher than the cricial buckling stress. Therefore, this compressive zone is "local" with respect to the expected buckling pattern and it is overconservative to use these stresses for design against Code buckling limits. An alternative approach considering the average compression over an area large enough to allow buckling gives a design stress close to zero and within Code limits.

2. Stabilizing Effect of Sand Transition Zone

The high compressive stresses predicted by the LLNL study result from the effectiveness of the sand transition zone in restraining shell thermal growth. Given the nearly constant level of compression throughout the zone, the effect of the sand is to move the effective point of fixity of the containment boundary conditions to just below grade level. In essence, the sand transition zone acts as a ring stiffener for the sphere and therefore increases its capacity against buckling near the base.

The sand zone does not act as a fully welded stiffener in that the shell is free to draw inward away from the sand. However, the above discussion on buckling patterns indicates that the critical buckling pattern will require several waves in the circumferential direction. Therefore, portions of the shell will need to deform outward to conform to this pattern (see Figure 2). The sand stiffness is adequate to resist this motion (as evidenced by the high thermal stresses created by this resistance) and it is unlikely that the sand will conform to the buckling pattern. A buckling pattern where the shell draws in uniformly around its circumference is not exected under circumferential compression and is more typical of buckling behavior under an axial compressive load.

Therefore, the sand transition zone is expected to provide adequate stiffening against buckling and will help stabilize the shell. Reference 15, for example, discusses the formation of buckling patterns and the significance of restoring forces in inhibiting the

onset of buckling. This effect supports the discussion on the local nature of the compression since it means that the actual effective point of shell fixity is closer to grade level where the compressive stress begins to drop off rapidly.

3. Stabilizing Effect of Internal Pressure

The peak thermal stresses in the containment occur during load cases involving a concurrent internal pressure of approximately 45 psig. Internal pressure substantially increases containment resistance against buckling due to the following effects:

A) Tensile membrane stresses are superimposed on the compressive zone reducing both the magnitude and area of the compressive stress.

B) The containment sphere is subjected to an overall tensile load increasing its global resistance against buckling.

C) Imperfections in the containment due to out-of-roundness are reduced thereby decreasing the knockdown factors put on allowables to account for imperfections.

Each of these effects are well known (and included in ASME Code case M-284) and contribute to the overall stability against buckling as recognized by the LLNL report itself.

SUMMARY

Containment shell buckling allowables are typically conservative and result in overdesign for most non-uniform or localized loadings. The San Onofre Unit 1 containment has a very limited zone of high compression where the shell is restrained against outward thermal growth. The resistance provided by the sand zone also acts as a stiffener against the buckling pattern expected under this loading. When this effect is considered, the sharp drop-off in compressive stress above grade results in a low average compressive membrane stress over the expected buckling area. The concurrent internal pressure provides a further stabilizing effect the increases the critical buckling stress levels.

The sum of all these effects leads to the conclusion that an adequate margin against the buckling exists for the San Onofre Unit 1 containment.

REFERENCES

1. Lo, Ting-Yu, "Systematic Evaluation Program Structural Review of the San Onofre Nuclear Generation Station Unit 1 Containment Structure Under Combined Loads," Lawrence Livermore National Laboratory Report UCID 19141, May 1982

2. Roark and Young, "Formulas for Stress and Strain," 5th Edition, McGraw-Hill Book Company, New York, 1975

3. Simmons, L. D. and R. W. Wierman, "Thermoelastic Buckling of Plates in a Cylindrical Geometry Against an Elastic Back Support," from Thermal Stresses in Severe Environments edited by D. P. H. Hasselman and R. A. Heller, Plenum Press, New York, 1980

4. Howard, Anderson, and Kvamsdal, "Advantages of Building LNG Liquefaction/ Storage Plants on Floating Barges," from 1979 Offshore Technology Conference Proceedings, Vol. IV, Houston, Texas, April 30 to May 3, 1979

5. Penning, F. A., and G. A. Thurston, "The Stability of Shallow Spherical Shells Under Concentrated Loads," prepared by Martin-Marietta Corporation, Denver, for National Aeronautics and Space Administration, Report No. NASA CR-265

6. Timoshenko and Gere, "Theory of Elastic Stability," 2nd Edition, McGraw-Hill Book Company, New York, 1961

7. Roark, Raymond J., "Stresses and Deflections in Thin Shells and Curved Plates Due to Concentrated and Variously Distributed Loading," National Advisory Committee for Aeronautics (NACA) Technical Note No. 806

8. Loo, Ta-Cheng, and R. M. Evan-Iwanowski, "Interaction of Critical Pressures and Critical Concentrated Loads Acting on Shallow Spherical Shells," Transactions of the ASME Journal of Applied Mechanics, September 1966, pp. 612-616

9. Loo, Ta-Cheng, and R. M. Evan-Iwanowski, "Experiments on Stability of Spherical Caps," Journal of the Engineering Mechanics Division, Proceedings of the American Society of Civil Engineers, June, 1964, pp. 255-270

10. Updike, D. P., and A. Kalnins, "Axisymmetric Behavior of an Elastic Spherical Shell Compressed Between Rigid Plates," Transactions of the ASME, Journal of Applied Mechanics, September, 1970, pp. 635-640

11. Harvey, J. F., "Pressure Component Construction," Van Nostrand Reinhold Company, New York, 1980

12. Baker, E. H., et al., "Shell Analysis Manual," prepared by North American Aviation, Inc., Downey, CA, for National Aeronautics and Space Administration, Report No. NASA CR-912, April, 1968

13. Arhocz, J. and Babcock, C. D., "The Buckling Analysis of Imperfection Sensitive Shell Structures," NASA Contractor Report 3310, 1980

14. Seide, P., Weingarten, V., and Masri, S., "Buckling Criteria and Application of Criteria to Design of Steel Containment Shell," NUREG/CR-0793, March 1979

15. Esslinger, M. E. and Geier, B. M., "Buckling and Postbuckling Behavior of Thin-Walled Circular Cylinders"

GEH:0874F

m = 7 meridional waves (over 240° of sphere)

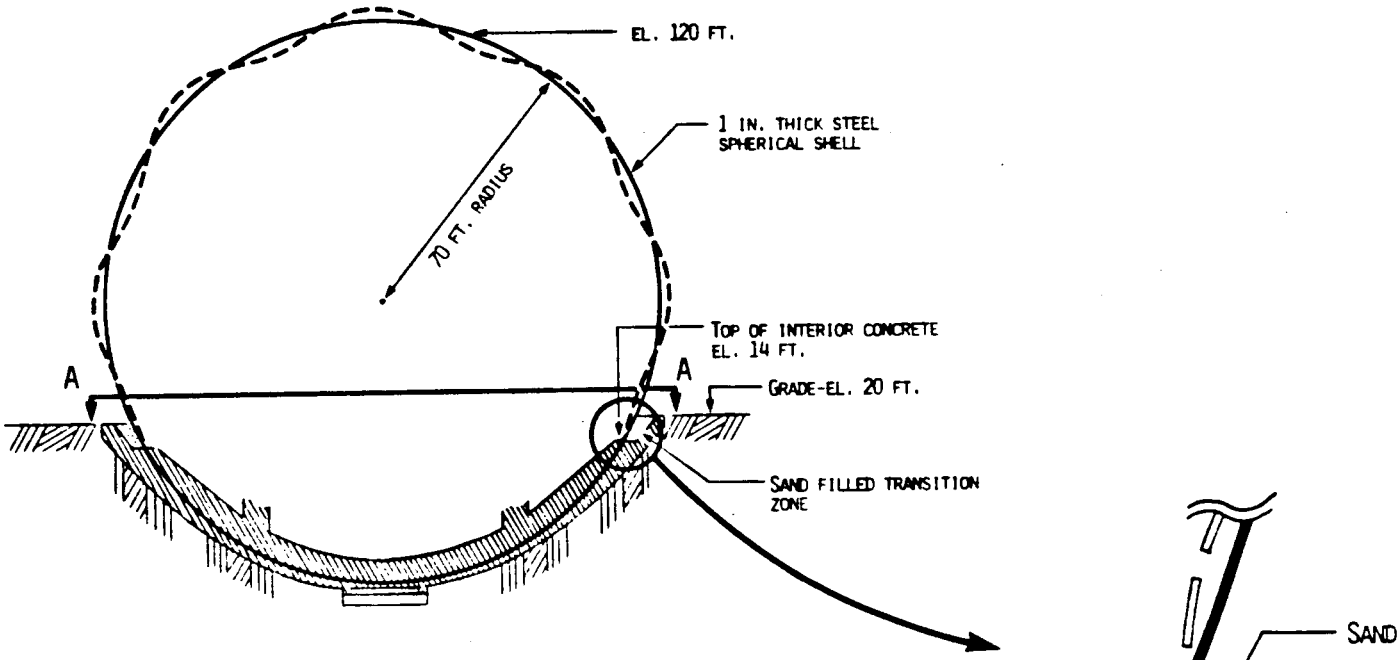

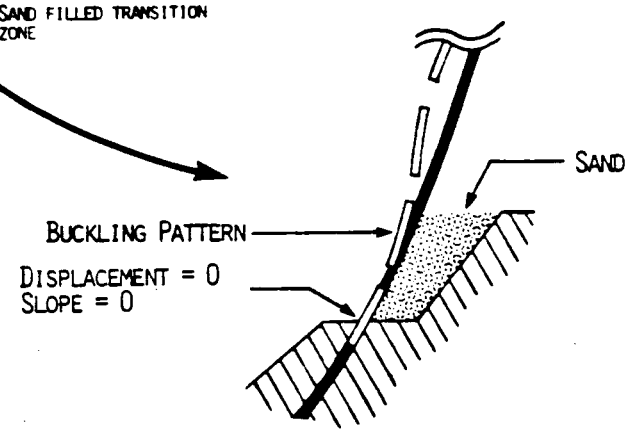

Boundary Condition At Containment Base

n = 10 circumferential waves

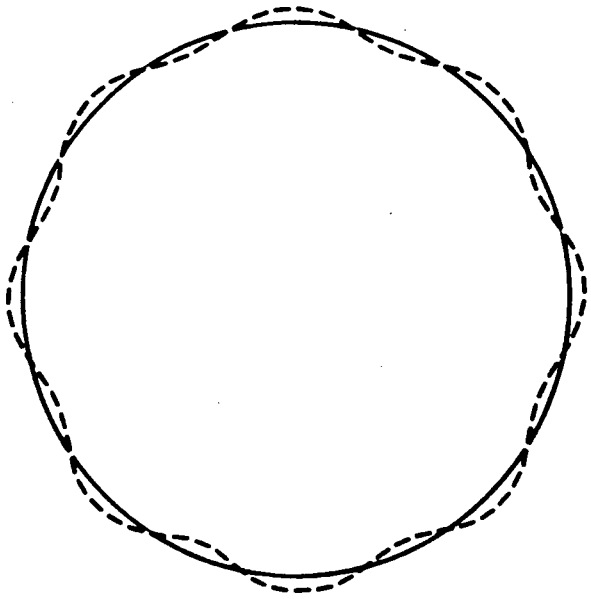

SECTION A-A

Fig. 1 Critical Buckling Pattern for Songs-1 Containment

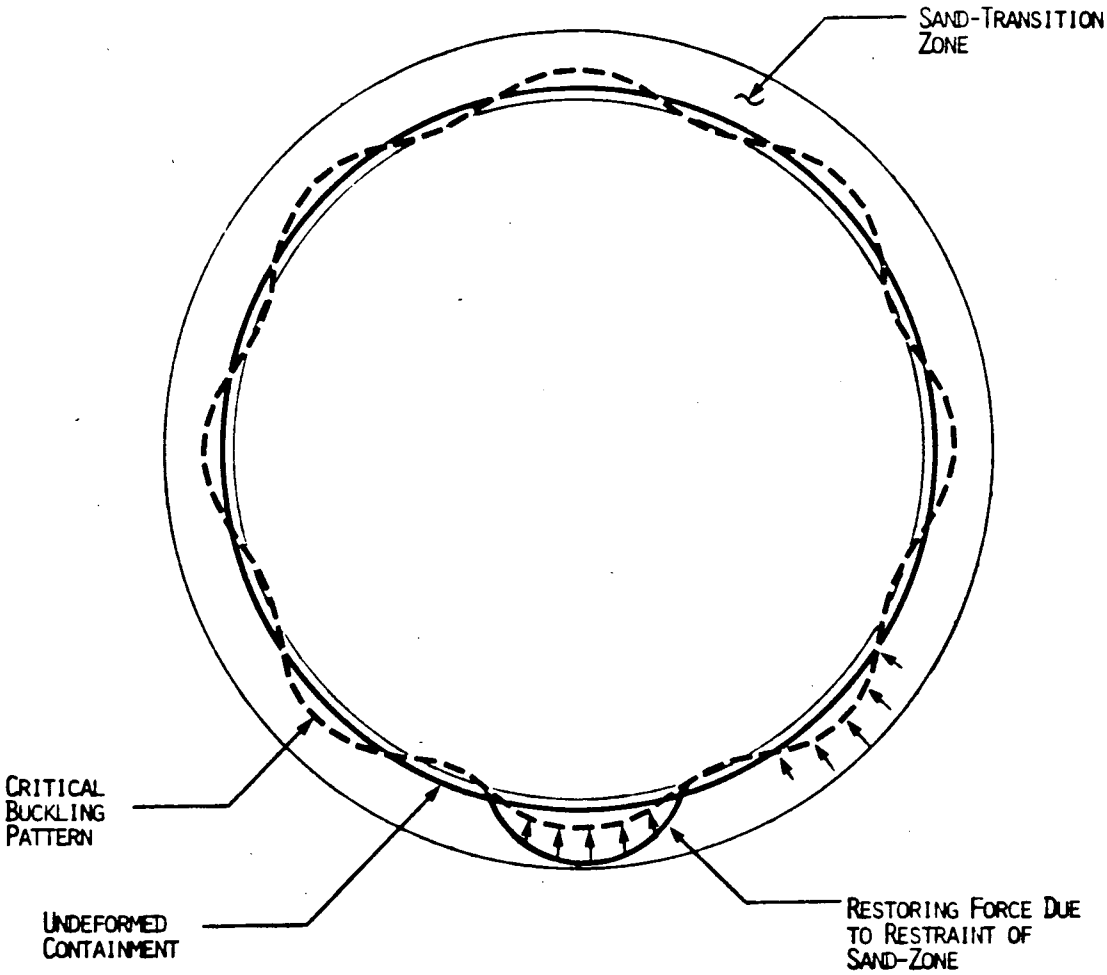

Fig. 2 Stabilizing Effect of Sand-Transition Zone

Topic No.	Title
VI-1	Organic Materials and Post-Accident Chemistry

In our January 19, 1984 letter, we committed to provide a plan to develop a program for the inspection of containment coatings, including the inspection frequency for San Onofre Unit 1. Accordingly, the following information regarding the inspection plan and the results of the inspection performed during the current plant outage is presented.

I. SCOPE

Items coated within the containment building (CB) were visually inspected to determine the condition of the coating. The purpose of the inspection was to verify the following:

1. Whether the coatings used in the initial installation are holding up from a corrosion prevention standpoint.

2. To recommend coating repair for those areas in need of repair.

The in-situ testing of the coatings inside the CB, in accordance with ANSI Standards, was not attempted due to the impracticality of testing in-place specimens.

II. INSPECTION

All equipment above the minus ten level was inspected. The inspection was divided into four primary areas, the containment liner plate, piping, HVAC equipment and miscellaneous items. The results of each inspection are as follows:

1. CONTAINMENT LINER PLATE

Areas of minor rusting were found on the walls and dome of the liner plate. The rust has occurred primarily at weld areas and at adjacent wall areas where there is a low dry film thickness. Approximately 95 percent of the existing coating is in excellent condition. No areas of flaking or peeling were found on the liner plate. Accordingly, no repairs are planned for the containment liner plate.

2. PIPING

Areas of salt and pepper rusting were found on piping at each containment elevation. It was noted that many of the salt and pepper rusting lines were located next to identically coated lines that showed little, if any, sign of rusting. The rusting appears to be limited to piping where sweating is caused by a temperature difference. The aluminum coating used on this particular piping is not capable of withstanding this environment, but the use of this type of coating is not significant enough to be a safety concern. The coating will be repaired with a coating suited to this environment.

The second area of failed coating was found on several sections of piping where the coating was applied over mill varnish. Flaking and peeling of the coating were found in these areas. This is not unusual since mill varnish is a dense hard substance which is difficult to penetrate. There was very little evidence of rusting at areas where mill varnish was found. The balance of the coated piping is in good condition requiring little or no repairs.

3. HVAC EQUIPMENT

The coating applied to the exterior surfaces of the HVAC equipment was found to have rusting along hatches and manways. One area of delamination may have occurred due to improper curing prior to application of the finish coat. Accordingly, this area will be repaired.

4. MISCELLANEOUS ITEMS

ITEM	COATINGS USED	CONDITION OF COATINGS	COMMENTS
Reactor Coolant Pumps	Enamel	Scratched and Chipped	Touchup Required Due to rough handling during removal for maintenance
Polar Crane	Epoxy	Good	No Touchup Required
Containment Hatch Door	Epoxy	Chipped	Touchup Required Damaged due to normal mechanical use
HVAC Recir-culation fans	Epoxy	Delamination Between Coats	Touchup Required

The remainder of the items inspected did not show excessive damage and no other repairs are planned.

III. CONCLUSION

The overall condition of the coatings in the CB appears to be good. Areas of flaking and peeling of coatings were minor. Based upon the inspection, there are no areas that can be classified as detrimental to the safe operation of the plant from a corrosion standpoint. However, it was noted that unqualified coating materials, such as, aluminum paint and machinery enamels, have been used inside containment. As previously stated, the use of these unqualified coating materials is not significant enough to be an area of concern from a safety standpoint.

As previously stated in our January 28, 1982 letter, the recommended paint repairs will be completed prior to return to power from the current outage. The repairs to the coatings will be performed in accordance with the guidance of Regulatory Guide 1.54, "Quality Assurance Requirements for Protective Coatings Applied to Water Cooled Nuclear Power Plants."

A program will be developed to perform future periodic inspections of the condition of containment coatings, prior to the next containment type A inspection following return-to-service from the current outage. The normal inspection interval will coincide with Containment Type A testing which would require an inspection every 39 months + 4 months or - 8 months, based upon San Onofre Unit 1, Appendix A Technical Specification 4.3.1.I.C.1.d, "Frequency."

It should be noted that you have San Onofre Unit 1 Amendment Application No. 114, Proposed Change No. 124 to the Appendix A Technical Specifications currently under consideration. This Proposed Change would revise the testing frequency discussed above to the standard frequency of 40 $\pm$ 10 month intervals with the third test of each set performed during the 10 year plant inservice inspection.

Topic No.	Title
VI-4	Containment Isolation (Electric)

Open Item

In your safety evaluation report for this topic, transmitted by letter dated September 3, 1981, you stated that the design of an "operating bypass" should be such that it does not block potential trip signals from any other variable than those necessary to avoid an undesirable actuation of safety features system when changing operating mode. Our response to this topic evaluation was transmitted by letter dated November 22, 1982. Included in that response, it was identified that when operating the "Block SIS Signal" switches, the containment spray signal (CSS) is also blocked. CSS is induced by a combination of SIAS and a high-high containment pressure signal (10 psig) utilizing "AND" logic. It was also noted that safety injection is one of the inputs to CIS; therefore, blocking SI will also partially block CIS. In order to provide adequate indication in the control room that these safety features would be blocked or impacted when SI is blocked, we committed to re-design the "Block SIS Signal" annunciator window to read:

Block SIS/CSS Signal
SI to CIS Blocked

Further investigation of this topic has determined that this modification is not warranted. This position is primarily based on the low safety significance of implementing the proposed modification. Implementation of this modification does not entail physical changes to the present operating configurations and therfore the degree of safety will not be enhanced. Furthermore, during normal plant cooldown, the automatic safety injection signal is manually blocked to prevent inadvertent actuation of safety injection. An RCS pressure bistable element generates an alarm (Alert to Block SI) at 1750 psig to advise the operator that the safety injection system should be manually blocked as pressure is intentionally reduced. Should system actuation be required after blocking, manual actuation of both injection flow trains is possible by deliberate sequencer actuation via manual initiate pushbuttons located on each sequencer Remote Surveillance Panel in the main control room. Automatic reset of the safety injection block circuits will occur at a pressure of 1900 psig in the pressurizer as the system is being brought to operating conditions. At that time, the safety injection block permissive indication will extinguish, indicating that the permissives are reestablished.

In regards to the impacted containment spray, actuation can be initiated as required by manually starting the refueling water pump and opening the appropriate valves. As explained below, modifications to the containment spray actuation circuitry have been implemented which will ensure actuation of spray, if necessary, independent of sequencer reset.

The containment spray system is actuated on a 2 out of 3 high pressure signal and initiation of the safety injection signal. In the event the sequencer is reset prior to the receipt of the 2 out of 3 signal (reset "Block SIS" signal) initiation of containment spray could be defeated. The containment spray actuation circuitry has been modified to include a seal-in relay contact to

seal in the safety injection signal. Therefore, reset of the sequencer will not defeat the actuation of the containment spray system. The sealing of the safety injection signal is released upon reset of the containment spray actuation signal.

Based on the information provided above, blocking of automatic initiation of more than one engineered safety feature occurs only when changing operating mode, at which time this configuration is desirable. The benefit gained by implementation of this modification is limited to additional information annunciated on the permisive display panel. Since operation of the SI block switch is an integral part of normal plant cooldown, reactor operators receive appropriate training to ensure familiarity with system operation. This familiarity includes operator awareness of the additional impacted ESF's and the actions necessary to initiate those systems, should actuation be required. The current operator training program provides adequate understanding of the system interaction, and implementation of the proposed modification will not significantly enhance operator awareness. Therefore, implementation of the proposed modification will not enhance safety. Furthermore, this modification does not entail changes in system operation. For these reasons, this modification is not warranted.

Topic No.	Title
VI-10.A	Testing of Reactor Trip System and Engineered Safety Features, Including Response Time Testing.

Our letter dated January 19, 1984 indicated that a response time testing program of the reactor protection system does not exist at San Onofre Unit 1 but that additional information on response time testing of other systems would be provided that justifies the current program. As indicated in previous submittals, operability of the components of the reactor trip system is verified every refueling outage by procedures. Also, channel functional tests are performed on the reactor trip channels. In addition to these tests, control rod operability and control rod drop time are verified periodically by plant procedures. Based on the information discussed below, implementing a response time testing program to measure channel response time between channel trip and operation of reactor trip is not warranted.

The time periods involved in system response time testing at San Onofre Unit 1 are normally on the order of a few seconds. System operation in time intervals within a few seconds is considered a successful operation of the system, i.e., the system performs its function to prevent core melt. With this amount of time available, the short time periods measured in RPS response time testing (on the order of less than a second) are not significant. Therefore, functional tests will demonstrate ability to function within seconds or minutes, since the test would be called a failure long before excessive amounts of time had passed. Your limited PRA for this topic agrees with this position.

In support of the RPS, components of the San Onofre Unit 1 Engineered Safety Features are periodically tested to verify operability. These tests include verifying valve stroke times, pump operability and channel functional tests. The containment isolation system, for example, is currently tested by the following procedures:

1. SO1-12.3-27 Monthly Sphere Isolation Channel Test

2. SO1-V-2.15 In-service Testing of Valves

3. SO1-V-2.14 In-service Testing of Pumps

4. SO1-12.8-03 Containment Isolation Check During Control Rod Drag Test

5. SO1-12.8-17 Sphere Isolation Valve Test

6. SO1-II-1.73 Containment Isolation System (calibration)

7. SO1-II-1.80 Monthly Containment Isolation Channel Test

Of the procedures listed above, the In-service Testing of Valves procedure requires valve response time testing. Furthermore, the CIAS channel is functionally tested on a monthly basis. While this procedure does not test the response time at the sensor circuit, it will demonstrate channel operability. Channel response time is insignificant compared to the actual amount of time required for system operation. Channel response times are generally on the order of a second or less while component response times, e.g., valve response times, are normally greater than several seconds.

In addition to response time testing of containment isolation system components, the safety injection system has similar testing requirements. In addition to the channel functional test and verification of valve response times, each safety injection pump is verified to reach 95% of its shutoff head within 10 seconds. This test is also conducted monthly. Other ESF's have similar channel functional tests and verification of valve response time testing requirements. The diesel generator start and sequencer alignment are response time tested as follows:

- On a monthly basis, the diesel generators are functionally tested to verify operability. The acceptance criteria for this test is that the diesel must be up to rated speed and voltage in less than or equal to 10 seconds.

- Sequencer alignment is verified monthly. Alignment verification entails measuring the time required to actuate various loads with intervals between each load block to be within ± 10% of its design interval.

The above discussion briefly describes the response time testing currently done at San Onofre Unit 1. For the RPS and ESF's channel response time testing is not done. However, implementing a program to test channel response time is not warranted. Channel functional tests and response time testing of selected components of these systems provide adequate assurance of system operability.

In addition to information regarding response time testing currently done at San Onofre Unit 1, you have requested that we propose a Technical Specification change which will incorporate channel testing, checking and calibrating requirements currently specified only by procedure. The schedule for submittal of this proposed change is prior to return to power from the next refueling outage.

Topic No.	Title
VII-1.A	Isolation of Reactor Protection System from Non-Safety Systems

In our January 19, 1984 letter, we committed to provide you with the results of our further evaluation regarding the adequacy of the isolation for open items 1-3 presented below. Accordingly, the following information regarding the results of our review are presented.

Open Items

At San Onofre Unit 1, the following were noted during the topic review:

1. For several RPS circuits there is no isolation between the remote meters, process recorders and the circuit.

    a. Pressurizer pressure
    b. Pressurizer level
    c. Steam to feedwater flow mismatch
    d. Startup rate neutron monitor
    e. High flux level

2. There is no isolation between the steam to feedwater flow mismatch system and the Optimac computer that controls steam generator flow and level.

3. There is insufficient isolation between the data logger and the nuclear instrument systems.

The NRC staff's position is that suitably qualified isolators should be provided or that the acceptability of the present design be justified by the licensee.

As a part of any justification, the "action pak" and multi-pen recorders should be described to the level suggested in Sections 7.2 and 7.3 of Regulatory Guide 1.70. Also, the licensee should provide a comparison between the standards applicable to the designs of the meters and those used in the design of the remainder of the reactor protection system.

SCE Responses

1. For several RPS circuits there is no isolation between the remote meters, process recorders and the circuit.

SCE Response:

The existing circuit configuration is adequate and that circuit modification is not cost effective for the following reasons:

For each non-isolated component in the safety-related circuit, there are four potential faults that could affect the logic circuit. These are: 1) short circuits, 2) open circuits, 3) grounded circuits, and 4) maximum credible voltage transients.

A) Pressurizer Pressure

Adequate isolation is provided to protect the channel current loop from open and short circuit faults produced by the recorder or its associated transfer switch. This isolation is provided in the form of a 100 ohm current sensing resistor which is installed directly in the current loop. Therefore open and short circuits produced by the recorder or its associated transfer switch will not cause significant effects on the host channel's current signal. This is true since in the case of an open circuit, the sensing resistor can carry the current signal with only a small addition to the total circuit resistance, and in the case of a short circuit, the host channel's current can be carried across the short.

Simultaneous grounding of all three channels within the transfer switch is not considered to be a credible fault scenario. And since the transfer switch does not have an independent power source, a voltage fault for this switch is not credible either.

For the ground and maximum credible voltage faults on the process recorder and for all postulated faults on the remote meters, RPS function is assured by the independence of the three redundant channels within the Pressurizer Pressure circuitry. The 2 out of 3 voting logic is configured such that any fault on one channel will not preclude these circuits from performing their protection functions.

Assuming simultaneous, congruent signals on all three channels, operation of the transfer switch with a ground or maximum credible voltage fault in the process recorder will not affect the RPS function since the two unfaulted channels would provide the two signals necessary to initiate a reactor trip.

B) Pressurizer Level

Similar to the Pressurizer Pressure circuitry, adequate isolation is provided to protect the channel current loop from open and short circuit faults produced by the recorder, or its associated transfer switch.

Simultaneous grounding of all three channels within the transfer switch is not considered to be a credible fault scenario. And since the transfer switch does not have an independent power source, a voltage fault for this switch is not credible either.

For ground and maximum credible voltage faults on the recorder and all postulated faults on the remote meters, RPS function is assured by the independence of the three redundant channels.

Assuming simultaneous, congruent signals on all three channels, operation of the transfer switch with a ground or maximum credible voltage fault in the process recorder will not affect the RPS function since the two unfaulted channels would provide the two signals necessary to initiate a reactor trip.

C) Steam to Feedwater Flow Mismatch

Isolation of the feedwater flow controller, action pak, and process recorder can be demonstrated for open circuit faults. This is due to the parallel wiring scheme used at San Onofre Unit 1 for the feedwater flow controller, action pak, and process recorder with allows the signal to perform its protection function despite an open circuit fault in either device.

Although no isolation exists for the other postulated faults, RPS function is assured by the complete independence of the three redundant channels within the steam to Feedwater Flow Mismatch circuitry. The 2 out of 3 voting logic is configured such that any fault on one channel will not preclude these circuits from performing their protection functions.

D) Startup Rate Neutron Monitor

Isolation is provided between the analog signals of the source range or intermediate range monitor circuitry and the recorders and data logger in the form of resistor isolation buffer circuitry.

Due to the high level of resistance used for these buffers, all postulated faults that could occur on the recorders or the data logger would not have a significant effect on the RPS analog signals to the control board mounted power level indicators. This is true since the high levels of resistance prohibit any fault from adding or removing more than a negligible amount of the analog signal amperage from the circuitry.

Additionally, it is noted that RPS function is assured since there are two completely independent neutron monitor channels for each range, and failure of one isolation device will not predlude the 1 out of 2 voting logic from initiating its RPS function.

E) High Flux Level

Similarly to the Startup Rate Neutron Monitor circuitry, isolation is provided between the analog signals and the recorders and data logger in the form of resistor isolation buffer circuitry.

Due to the high levels of resistance used for these buffers, all postulated faults that could occur on the recorders or the data logger would not have a significant affect on the RPS analog signals

to the control board mounted power level indicators. This is true since the high levels of resistance prohibit any fault from adding or removing a significant amount of the analog signal amperage from the circuitry.

Additionally, it is noted that RPS function is assured since there are four completely independent power range channels, and the sytem provides annunciation when any two channels deviate from one another by a preset amount, or when a channel fails.

While resistance isolation buffer circuitry and dependence on redundant channels for RPS function are not ideal, they are considered adequate due to the low safety significance of the RPS isolation issue. The probability of fault due to lack of isolation on the RPS circuitry, has been shown to have an insignificant effect on the overall risk to core melt. The NRC's limited PRA on the RPS system at San Onofre Unit 1 has shown that the probability of a core melt due to failure of isolation of the RPS is on the order of $1X10^{-10}$/reactor year.

2. There is no isolation between the steam to feedwater flow mismatch system and the optimac computer that controls the steam generator flow and level.

SCE Response:

Circuit analysis on the Steam to Feedwater Flow circuitry indicates that there is no isolation. Therefore, the only fault that would not affect the RPS circuitry is an open fault. However, due to the complete independence of each of the three channels of the steam to feedwater flow mismatch circuitry, and the two out of three voting logic scheme, a fault in one channel will not preclude the RPS trip function.

3. There is insufficient isolation between the data logger and the nuclear instrument systems.

SCE Response:

Based on circuit analysis, isolation exists between the nuclear instrument data logger and the reactor protection system analog circuits in the form of resistance buffers. The resistors, which are in excess of 91,000 ohms, preclude any postulated fault which may occur on the data logger from having any significant impact on the RPS analog signal.

Given the low safety significance of the RPS isolation issue, the resistance buffer isolation and the redundant channel justification presented in our responses to Items 2 and 3 above are adequate. This conclusion is substantiated by the NRC's limited PRA for the reactor protection system of San Onofre Unit 1 which shows that the probability of a core melt due to failure of isolation of the reactor protection system is on the order of 1×10^{-10}/reactor year.

Conclusion

Based upon the discussion in our responses to the three open items of this topic. Additional modifications to the RPS at San Onofre Unit 1 are not warranted.

Topic No.	Title
VIII-3.B	D.C. Power System Bus Voltage Monitoring and Annunciation

A. INTRODUCTION

The objective of SEP Topic VIII-3.B is to assure that the design of the safety related DC power systems includes sufficient monitoring and annunciation to show that each system is ready to perform its intended safety functions.

More specifically, the NRC has proposed that, as a minimum, the following indications and alarms shall be provided in the Control Room for the DC power systems:

1. Battery current (ammeter - charge/discharge)
2. Battery discharge rate high alarm
3. Battery breaker or fuse open alarm
4. DC bus voltage (voltmeter)
5. DC bus undervoltage/overvoltage alarm
6. DC bus ground alarm (for ungrounded systems)
7. Battery charger output current (ammeter)
8. Battery charger breaker or fuse open alarm

At San Onofre Unit 1, the DC power systems consist of 125-V DC systems Nos. 1 and 2 and the UPS for Safety Injection Valve MOV 850C.

To evaluate the need for these requirements on these systems, the following was reviewed:

1. Current Licensing Criteria
   IEEE Standard 308-1980 "Standard Criteria for Class 1E Power Systems for Nuclear Power Generating Stations."

2. Alarms and Indications presently existing locally and in the Control Room for each DC system.

3. System Operating Instructions - Annunciator Panel Response

4. Technical Specification Surveillance Program Implementation.

5. Daily operator inspection schedule.

B. CONCLUSION AND RECOMMENDATION

The review of the indications and alarms available for the DC systems of San Onofre Unit 1, indicates that the objective of SEP Topic VIII-3.B is met. It assures that the design of the safety related DC power systems

includes sufficient monitoring and annunciation to show that each system is ready to perform its intended safety functions. Accordingly, no additional indication or alarm is required in the Control Room.

C. CURRENT LICENSING CRITERIA

The overall objective of the licensing criteria is that the design of the safety-related DC power systems includes sufficient monitoring and annunciation to show that each system is ready to perform its intended safety functions.

As indicated by Section 7.1 of the IEEE Standard 308-1980, "Standard Criteria for Class 1E Power Systems for Nuclear Power Generating Stations," the surveillance methods shall be as follows:

"7.1 Surveillance Methods

7.1.1 Operational status information shall be provided for Class 1E power systems. The extent, selection, and application of the various surveillance methods, including periodic testing, to indicate the operational status of Class 1E power systems will depend on individual plant design requirements. Illustrative surveillance methods for Class 1E equipment are outlined in Table 3."

Based on this paragraph, the IEEE Standard indicates that the need for indications and alarms and their location for safety related DC systems, will depend on individual plant design requirements. The surveillance methods listed in Table 3 of the Standard for Class 1E equipment, such as a DC system, are qualified as "illustrative".

Therefore, the eight indications or alarms proposed by the NRC to be located in the Control Room are not specifically required by any Standard. The need for each of these indications or alarms should be based only on the overall objective of the licensing criteria, that is, to show that each system is ready to perform its intended safety function.

D. DC SYSTEMS CONDITIONS AT SAN ONOFRE UNIT 1

With the objective of showing that a DC system is ready to perform its safety function, indications and alarms are needed in the Control Room only when a condition existing in the DC system requires immediate operator action. Using this criteria, the following conclusions are made:

D.1 Indications or alarms definitely needed in the Control Room:

1. Breaker or Fuse Open Alarm for Batteries and Battery Chargers

2. Bus Undervoltage/Overvoltage Alarm

3. Ground Alarm (for ungrounded systems)

Ground alarm is needed if exposure to ground faults is significant, especially if the DC system includes numerous DC circuits.

D.2 Indications not Absolutely Needed in the Control Room: Indications for Battery and Battery Charger Currents, DC Bus Voltage, and Battery Discharge High Rate Alarm

The main fact to have in mind with DC systems is that sudden failures of a Battery or Battery Charger, which would require immediate operator action, are extremely rare. The deterioration of batteries and battery chargers is a slow process and problems which may develop do not appear suddenly.

At San Onofre Unit 1 the battery systems of 125-V DC systems Nos. 1 and 2 and of the UPS system of MOV 850C, including their local indications and alarms are monitored on a daily basis (six times a day).

In addition to the these inspections, a comprehensive battery surveillance program is performed in accordance with Technical Specification 4.4. This program includes inspections, surveillances and tests at various intervals. A request to revise Technical Specification 4.4 was recently submitted to the NRC. This request, Proposed Change 126 (Attachment 1), seeks to revise the battery surveillances Technical Specifications consistent with the NRC Standard Technical Specifications. Based on the status of the NRC review, we expect Proposed Change 126 to be approved prior to return to power. As can be seen in Attachment 1, Proposed Change 126 will enhance the battery surveillance program in accordance with NRC guidance to provide further assurance that the batteries are properly monitored and maintained.

The daily monitoring and surveillance program are adequate to monitor the condition of the batteries and battery chargers and allow sufficient time to anticipate problems and take corrective action. They ensure that the batteries and battery chargers are ready to perform their safety functions.

Based on these considerations, the following indications or alarms are not absolutely needed in the Control Room:

1. Battery Current and Battery Charger Current - Ammeters

Under normal operation, when the battery charger is in service, the battery charger current is the sum of the total DC bus load current and the battery charging current (which is minimal, except after a discharge has occurred). The battery charger current is practically the same as the total DC bus load current. When the battery charger is not available the battery current is then equal to the total DC bus load current.

Therefore, the battery current and the battery charger current indicate the DC bus load current. They do not indicate the condition of the battery or the battery charger. The monitoring of these two currents in the Control Room is not useful in determining whether immediate action is required. It does not indicate whether or not the battery can serve the much larger

loads under emergency conditions to perform safety functions. Only the daily monitoring of the equipment, the existing local indications, and the surveillance program described in Attachment No. 1 are necessary to provide this assurance.

2. Battery High Discharge Alarm

Existence of high battery discharge would occur when the battery charger is not available which would be indicated in the Control Room by the Battery Charger breaker open alarm. Excessive discharge rate would be indicated by a low voltage alarm in the Control Room, (which is set to indicate that the charger is not charging).

For the reasons indicated above, this alarm is not required either in the Control Room or locally.

3. DC Bus Voltage - Voltmeter

Although it is very important to monitor the DC bus voltage with a voltmeter, it is not necessary to do it from the Control Room. Daily monitoring of the local voltmeter (six times a day), is considered to be adequate, as well as the surveillance program to provide assurance that the DC system is ready to perform its function. If sudden voltage problems occur, requiring immediate operator action, undervoltage alarms currently exist in the Control Room.

E. 125-DC SYSTEMS NOS. 1 AND 2

Table 1 summarizes the status of the indications or alarms proposed by the NRC to be in the Control Room.

Undervoltage alarms are available in the Control Room not only for the DC bus but also for each DC circuit.

The battery current can be determined from the local ammeters: it is the difference between the battery charger output current and the total DC bus current.

Based on the discussion in Section D above, the existing indications and alarms are considered to be acceptable. For information, Table 2 gives a complete list of all indications and alarms available in the Control Room and locally.

F. UPS SYSTEM FOR SAFETY INJECTION VALVE MOV 850C

Table 1 summarizes the status of the indications or alarms proposed by the NRC to be in the Control Room.

For the battery current a local ammeter is available, for the battery charger a low charging current alarm is available in the Control Room.

It should be noted that there is no ground alarm. Although the UPS DC system is not grounded, this is acceptable because ground faults are extremely unlikely for the following reasons:

1. As shown by Figure No. 1, the UPS system is needed only during SISLOP (extremely unlikely) and during testing of the safety injection system (SISLOP tests) once every 18 months. Except on these rare occasions, the only DC current existing in the UPS system is the no-load current of the inverter and the minimum charging current on the battery to maintain its charge, as shown by Figure No. 1.

2. The exposure of the UPS system to ground faults is very limited when compared to the 125-V DC systems Nos. 1 and 2. As shown by Figure No. 1, instead of serving a multiplicity of loads with DC cables routed throughout the plant, it serves only one load: the inverter that provides 480-V AC power to MOV 850C. The inverter and the battery charger are enclosed in adjacent cubicles close to the battery location.

3. If a ground fault occurs and develops into a ground fault on both positive and negative leads, the battery will discharge which will result in a low voltage and will cause a low voltage alarm in the Control Room. Because a SISLOP is extremely unlikely, enough time would be required to correct the problem. Even if SISLOP occurs, Safety Injection can still take place with only one Safety Injection Valve. If MOV 850C fails, safety injection valves MOV 850A and MOV 850B would be available.

Therefore, based on these considerations and the discussion of Section D above, the present indications and alarms of UPS system of MOV 850C are acceptable. This confirms the conclusions of a Probability and Risk Analysis (PRA) performed at the request of the NRC for SEP Topic VIII-3.B.

For information, Table 3 gives a complete list of all indications and alarms available in the Control Room and locally.

G. REFERENCES

1. NRC definition of SEP Topic V111-3B, DC Power System, Bus Voltage Monitoring and Annunciation, San Onofre Nuclear Generating Station, Unit 1.

2. IEEE Standard 308-1980 "Standard Criteria for Class 1E Power Systems for Nuclear Power Generating Stations."

3. Probability and Risk Analysis - SEP Topic V111-3.B DC Power System Bus Voltage Monitoring and Annunciation-UPS System

4. San Onofre Nuclear Generating Station - Technical Specification - Sections:
   3.7 Auxiliary Electrical Supply
   4.4 Emergency Power System Periodic Testing

5. System Operating Instructions:
   (SO1)-13-10 Electrical Annunciator Panel Responses
   (SO1)-13-12 Diesel Generator No. 2 Annunciator Panel Response
   (SO1)-13-13 Diesel Generator No. 1 Annunciator Panel Response

6. Drawings
   One Line Diagrams:

N-1540	SH 17	5102173-18	125-V DC System 1
N-1540	SH 17B	5149348-7	125-V DC System 2

   Elementary Diagram:

N-1542	SH 64	455516-8	MOV 850C

   Panel Layout:

N-1540	SH W3	5149269-6	Safety Injection to Loop "C" Annunciator Engineering Local Control Panel

   Instruction Manual - Elgar Corp. UPS No. 373-3-108-116

PSave03:nps

TABLE 1

SAN ONOFRE UNIT NO. 1 DC SYSTEMS
INDICATIONS AND ALARMS PROPOSED BY THE NRC
TO BE AVAILABLE IN CONTROL ROOM

STATUS: AVAILABLE ? IF NO, ALTERNATIVE IS INDICATED

	INDICATIONS AND ALARMS PROPOSED FOR THE CONTROL ROOM	125-V DC SYSTEM NO. 1		125-V DC SYSTEM NO. 2		UPS SYSTEM MOV 850C (Needed only during SISLOP or Tests)	
		Available	Alternative	Available	Alternative	Available	Alternative
	BATTERY						
1.	Current Ammeter Charge/Discharge	NO	o Local ammeters: (DC Bus Current - Battery Charger Current - Inspection 6 times a day)	NO	o Local ammeters: (DC Bus Current - Battery Charger Current - Inspection 6 times a day)	NO	o Local Ammeter (Inspection 6 times a day)
2.	Discharge Rate High Alarm	NO	o Low Voltage Alarm in Control Room	NO	o Low Voltage Alarm in Control Room	NO	o Low Voltage Alarm in Control Room
3.	Breaker or Fuse Open Alarm	YES		YES		YES	
	DC BUS						
4.	Voltage (Voltmeter)	YES		NO	o Local Voltmeter (Inspection 6 times a day) o Low Voltage Alarm in Control Room	NO	o Local Voltmeter (Inspection 6 times a day) o Low Voltage Alarm in Control Room
5.	Undervoltage/Overvoltage Alarm	YES		YES		YES	
6.	Ground Alarm	YES		YES		NO	o Extremely Low Probability of Ground Faults o Low Voltage Alarm in Control Room o Ample time for corrective action
	BATTERY CHARGER						
7.	Output Current (Ammeter)	NO	o Local Ammeter (Inspection 6 times a day)	NO	o Local Ammeter (Inspection 6 times a day)	NO	o Low Charging Current Alarm in the Control Room
8.	Breaker or Fuse Open Alarm (Loss of AC)	YES		YES		YES	

PSave03a:nps

TABLE 2

SAN ONOFRE UNIT NO. 1
125-V DC SYSTEMS NOS. 1 AND 2
INDICATIONS AND ALARMS

LOCATIONS: LO = Local
CR = Control Room

	125-V DC SYSTEMS			
	NO. 1		NO. 2	
Battery				
Breaker Open Alarm		CR		CR
Hydrogen Level High Alarm		CR		CR
Battery Room Temperature Below 60°F			LO	
DC Bus				
Voltage (Voltmeter)	LO	CR	LO	
Current (Ammeter)	LO		LO	
Ground Alarm		CR		CR
Undervoltage Alarm		CR		CR
DC Circuit Off Alarm		CR		CR
Battery Charger				
Input Current (Ammeter)	LO			
Output Current (Ammeter)	LO		LO	
Output Voltage (Voltmeter)	LO		LO	
Input Breaker (Open/Close Indicating Light)	LO		LO	
Breaker or Fuse Open Alarm (Loss of AC)		CR		CR

PSave03a:nps

TABLE 3

SAN ONOFRE UNIT NO. 1
UPS FOR SAFETY INJECTION VALVE MOV 850C
INDICATIONS AND ALARMS

Location: LO = Local
CR = Control Room

BATTERY		
Amperes (Ammeter)	LO	
Low Volt Alarm	LO	CR
Breaker open/close indicator light	LO	
CHARGER		
AC Input circuit breaker light	LO	
Low Charging Current Alarm	LO	CR
Voltmeter	LO	
AC Input Indicator Light	LO	
Low AC Input Indicator Light	LO	
DC Fuse Blown	LO	CR
DC BUS		
High-Low Volt Alarm	LO	CR
INVERTER		
Current Limit Alarm	LO	CR
Loss of Cooling Alarm	LO	CR
Over Temperature Alarm		CR
Reverse Current Alarm	LO	CR
Filter Fuse Alarm	LO	CR
AC Frequency Meter	LO	
AC Voltage (Voltmeter)	LO	
AC Current (Ammeter)	LO	

PSave03a:nps

FIGURE NO. 1

SAN ONOFRE UNIT NO. 1
DC SYSTEMS GENERAL ARRANGEMENT

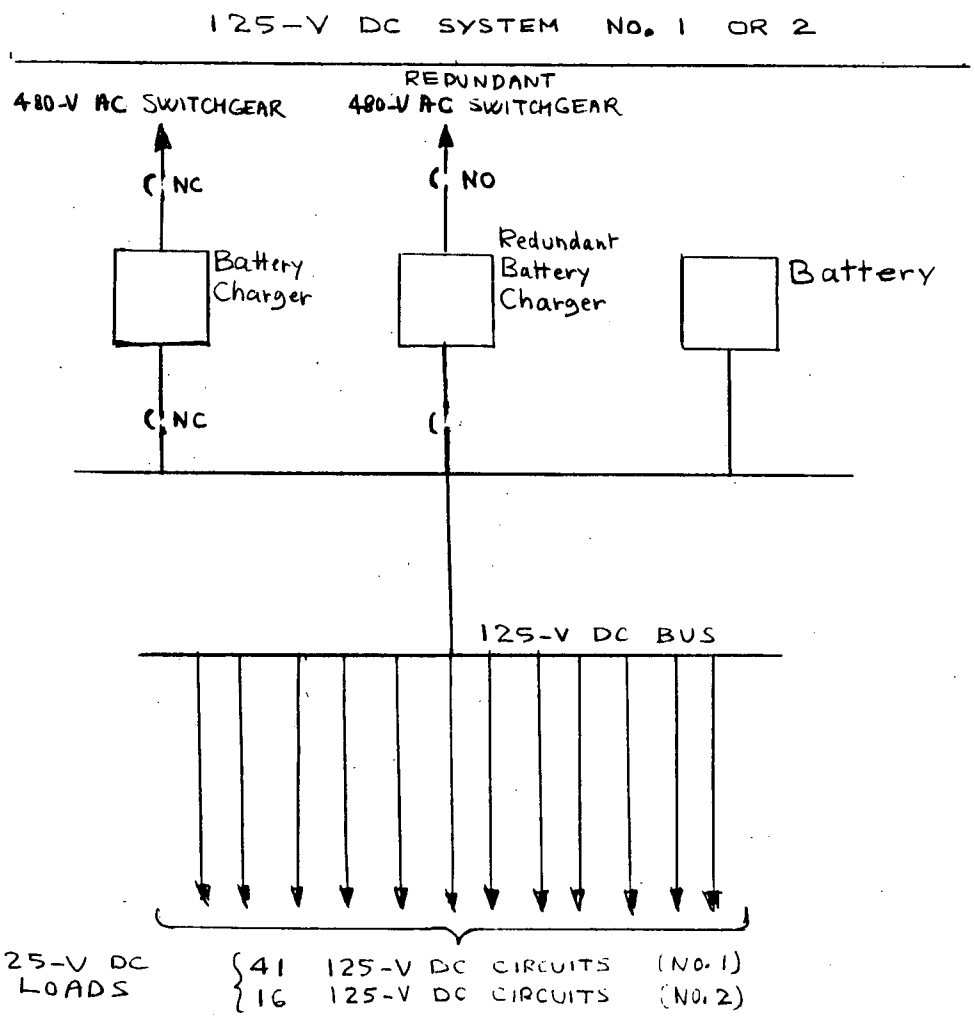

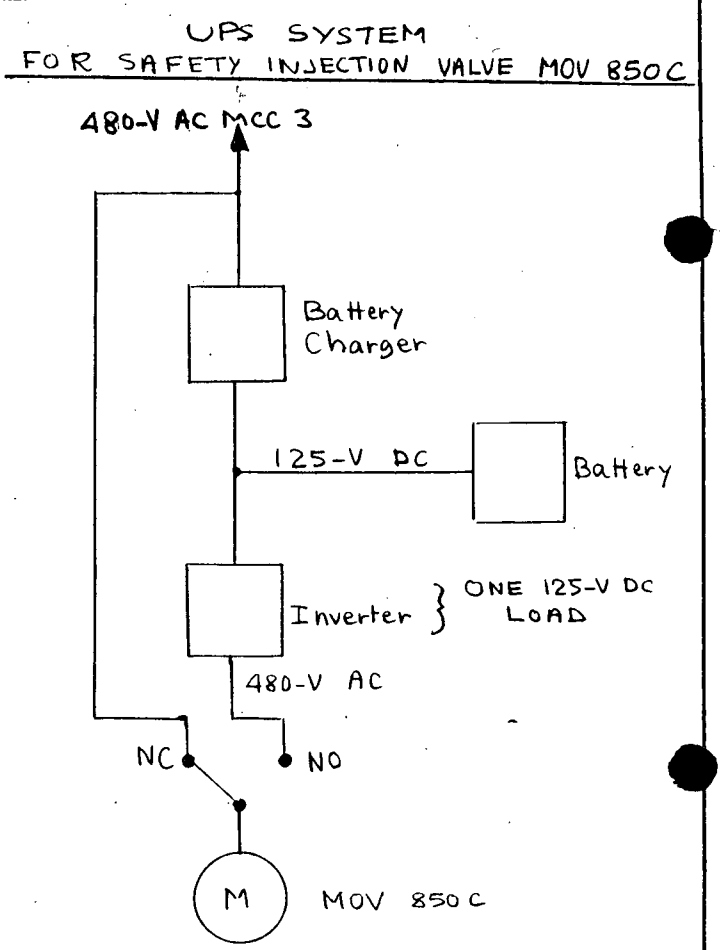

ATTACHMENT NO. 1

EXCERPT OF PROPOSED CHANGE NO. 126

TECHNICAL SPECIFICATION SECTION 4.4

4.4.D. The required DC power sources specified in Technical Specification 3.7 shall meet the following:

1. Each DC Bus train shall be determined operable and energized at least once per 7 days by verifying correct breaker alignment and power availability.

2. Each 125 volt battery bank and charger shall be demonstrated operable:

   a. At least once per 7 days by verifying that:

      (1) The parameters in Table 4.4-1 meet the Category A limits, and

      (2) The total battery terminal voltage is greater than or equal to 129 volts on float charge.

   b. At least once per 92 days and within 7 days after a battery discharge with battery terminal voltage below 110 volts, or battery overcharge with battery terminal voltage above 150 volts, by verifying that:

      (1) The parameters in Table 4.4-1 meet the Category B limits,

      (2) There is no visible corrosion at either terminals or connectors, or the connection resistance of these items is less than 150×10^{-6} ohms, and

      (3) The average electrolyte temperature of ten connected cells is above $61^{o}F$ for battery banks associated with DC Bus No. 1 and DC Bus No. 2.

   c. At least once per 18 months by verifying that:

      (1) The cells, cell plates and battery racks show no visual indication of physical damage or abnormal deterioration,

      (2) The cell-to-cell and terminal connections are clean, tight and coated with anti-corrosion material,

(3) The resistance of each cell-to-cell and terminal connection is less than or equal to 150×10^{-6} ohms,

(4) The battery charger for 125 volt DC Bus No. 1 will supply at least 500 amps DC at 130 volts DC for at least 8 hours,

(5) The battery charger for 125 volt DC Bus No. 2 will supply at least 200 amps DC at 130 volts DC for at least 8 hours, and

(6) The battery charger for the UPS will supply at least 10 amps AC at 480 volts AC for at least 8 hours as measured at the output of the UPS inverter.

d. At least once per 18 months, during shutdown, by verifying that the battery capacity is adequate to supply and maintain in OPERABLE status all of the actual or simulated emergency loads for the design duty cycle when the battery is subjected to a battery service test.

e. At least once per 60 months, during shutdown, by verifying that the battery capacity is at least 80% of the manufacturer's rating when subjected to a performance discharge test. Once per 60 month interval, this performance discharge test may be performed in lieu of the battery service test required by Surveillance Requirement 4.4.D.2.d.

f. Annual performance discharge tests of battery capacity shall be given to any battery that shows signs of degradation or has reached 85% of the service life expected for the application. Degradation is indicated when the battery capacity drops more than 10% of rated capacity from its average on previous performance tests, or is below 90% of the manufacturer's rating.

ATTACHMENT NO. 1

TABLE 4.4-1

BATTERY SURVEILLANCE REQUIREMENTS

	CATEGORY A(1)	CATEGORY B(2)	
Parameter	Limits for each designated pilot cell	Limits for each connected cell	Allowable (3) value for each connected cell
Electrolyte Level	>Minimum level indication mark, and ≤1/4" above maximum level indication mark	>Minimum level indication mark, and ≤1/4" above maximum level indication mark	Above top of plates, and not overflowing
Float Voltage	≥ 2.13 volts	≥ 2.13 volts (c)	> 2.07 volts
Specific Gravity(a)	≥ 1.200(b)	≥ 1.195	Not more than .020 below the average of all connected cells
		Average of all connected cells > 1.205	Average of all connected cells ≥ 1.195(b)

(a) Corrected for electrolyte temperature and level.
(b) Or battery charging current is less than 2 amps when on charge.
(c) Corrected for average electrolyte temperature in accordance with IEEE STD 450-1980.
(1) For any Category A parameter(s) outside the limit(s) shown, the battery may be considered OPERABLE provided that within 24 hours all the Category B measurements are taken and found to be within their allowable values, and provided all Category A and B parameter(s) are restored to within limits within the next 6 days.
(2) For any Category B parameter(s) outside the limit(s) shown, the battery may be considered OPERABLE provided that the Category B parameter(s) are restored to within limits within 7 days.
(3) Any Category B parameter not within its allowable value indicates an inoperable battery.

Topic No.	Title
IX-3	Station Service and Cooling Water Systems

Background

In our January 19, 1984 letter to the NRC, it was indicated that the results of a review of passive failures in the CCW system and the closure of the tsunami gates or motor operated valves in a post-accident scenario would be provided at a later date. The information provided here is the result of those reviews.

Prior to startup of San Onofre Unit 1 a seismically qualified alternate means for bringing the plant to hot shutdown will be available. This method for shutdown utilizes the spent fuel pit for maintaining the plant at hot shutdown and does not include the CCW or SWC systems. Information on the systems to be used for shutdown in the event of an earthquake have been provided to you by letter dated December 23, 1983. Also as part of the Appendix R safe shutdown issue, a dedicated shutdown system will be installed at San Onofre Unit 1. The conceptual design of this system also does not include the CCW or SWC systems. Details on the design of this system will be provided to the NRC by April 20, 1984.

CCW Passive Failures

With regards to the random passive failure in the CCW system, the above identified shutdown methods will be available. However, as the random failure is not associated with any initiating events, the shutdown method used will be similar to that developed for the seismic reevaluation program with the one exception that the RWST will be available to provide RCS make-up. Therefore, this open item is resolved.

Post-Accident Closure of Tsunami Gates or Motor Operated Valves

With regards to the second open item, the tsunami gates and motor operated valves in the intake and discharge conduits of the Circulating Water System are required for operation only under unique conditions. Both the tsunami gates and motor operated valves are normally maintained open. The need to close the tsunami gates would occur during a tsunami event, when the operator is instructed by procedure to close the gates. The motor operated intake and discharge valves are closed during plant heat treatment of the Circulating Water System. The chance of inadvertent closure of the tsunami gates or the motor operated valves during a post-accident scenario, not involving a tsunami, is remote since the operation of these valves is not addressed by the post-accident procedures. As part of SEP Topic II-3.B.1, the need to close the tsunami gates during a tsunami is being addressed. Based on this information and the operation of the tsunami gates and motor operated valves, it is concluded that closure of these valves during a post-accident scenario is highly unlikely. Therefore, this open item is closed pending resolution of SEP Topic II-3.B.1.