REGULATORY INFORMATION DISTRIBUTION SYSTEM (RIDS)

ACCESSION NBR: 8604020140 DOC. DATE: 86/03/31 NOTARIZED: NO DOCKET #
FACIL: 50-361 San Onofre Nuclear Station, Unit 2, Southern Californ 05000361
50-362 San Onofre Nuclear Station, Unit 3, Southern Californ 05000362
AUTH. NAME AUTHOR AFFILIATION
MEDFORD, M. O. Southern California Edison Co.
RECIP. NAME RECIPIENT AFFILIATION
KNIGHTON, G. R. PWR Project Directorate 7

SUBJECT: Forwards addl info re NUREG-0612, "Control of heavy loads," providing update on reactor vessel weld inservice insp positioning sys. Sys will be used to inspect reactor vessel welds in early Apr 1986.

DISTRIBUTION CODE: A033D COPIES RECEIVED: LTR 1 ENCL 1 SIZE: 56
TITLE: OR Submittal: USI A-36 Control of Heavy Load Near Spent Fuel-NUREG-06

NOTES: ELD Chandler 1cy. 05000361
ELD Chandler 1cy. 05000362

	RECIPIENT ID CODE/NAME		COPIES LTTR	COPIES ENCL	RECIPIENT ID CODE/NAME		COPIES LTTR	COPIES ENCL
	PWR-B EB		1	1	NRR SINGH, A	01	4	4
	PWR-B PD7 PD		5	5	ROOD, H		1	1
	PWR-B PEICSB		1	1	PWR-B RSB		1	1
INTERNAL:	ACRS	13	6	6	ADM/LFMB		1	0
	NRR BWR ADTS		1	1	NRR NEIGHBORS	09	1	1
	NRR PWR-A ADTS		1	1	NRR PWR-B ADTS		1	1
	NRR/TAMB		1	1	REG FILE	04	1	1
	RGN5		1	1				
EXTERNAL:	24X		1	1	LPDR	03	1	1
	NRC PDR	02	1	1	NSIC	06	1	1
NOTES:			1	1				

TOTAL NUMBER OF COPIES REQUIRED: LTTR 32 ENCL 31

Southern California Edison Company
P. O. BOX 800
2244 WALNUT GROVE AVENUE
ROSEMEAD, CALIFORNIA 91770

M. O. MEDFORD
MANAGER, NUCLEAR LICENSING

TELEPHONE
(818) 302-1749

MAR 31 1986

Director, Office of Nuclear Reactor Regulation
Attention: Mr. George W. Knighton, Director
PWR Project Directorate No. 7
Division of PWR Licensing - B
U. S. Nuclear Regulatory Commission
Washington, D. C. 20555

Gentlemen:

Subject: Docket Nos. 50-361 and 50-362
San Onofre Nuclear Generating Station
Units 2 and 3

References: (1) Evaluation of Heavy Load Handling Operations at San Onofre Nuclear Generating Station, Units 2 & 3, Response to NUREG-0612, Submitted to the NRC by K. P. Baskin (SCE) to Frank Miraglia (NRC) letter dated July 7, 1981
(2) October 5, 1984 letter from M. O. Medford (SCE) to George W. Knighton (NRC). Subject: Heavy Loads, San Onofre Units 2 and 3.

Enclosed are seven (7) copies of additional information concerning NUREG - 0612, Control of Heavy Loads, which provides updated information concerning the Reactor Vessel Weld Inservice Inspection Positioning System (Reactor Vessel ISI System). Information concerning the Reactor Vessel ISI System was previously submitted to the NRC by Reference (1), and a summary of the SCE compliance with NUREG-0612 was provided by Reference (2).

This Reactor Vessel ISI System has been tested and inspected in accordance with the specifications in NUREG - 0612, and will be used to inspect the San Onofre Unit 2 reactor vessel welds beginning in early April 1986 and will also be used for Unit 3 inspections in the future.

If you have any questions concerning the enclosed information, please call Mr. T. D. Mercurio (818/302-2645).

Very truly yours,

M. O. Medford

Enclosure

cc: H. Rood (USNRC, SONGS 2/3 Project Manager)
F. R. Huey (NRC Senior Resident Inspector)

A033
1/1

NUREG 0612 EVALUATION
REACTOR VESSEL INSERVICE INSPECTION (ISI) POSITIONING SYSTEM
San Onofre Nuclear Generating Station, Units 2 and 3

FUNCTION

The Reactor Vessel ISI System is used to perform inservice inspections of the reactor vessel welds including the vertical and horizontal welds, the bottom hemisphere welds, and the inlet and outlet nozzle welds.

OPERATION

The Reactor Vessel ISI System is lifted by the containment polar crane using a lifting bail hung on the polar crane hook and is placed on the reactor vessel flange. The ISI System is supported on the reactor vessel top flange by three legs with mounting clamps used to position and lock the system in place on two reactor vessel guide studs. Lifting of the ISI system by the polar crane is performed in accordance with an approved station procedure which meets the requirements of NUREG-0612.

SAFETY CLASS

The Reactor Vessel ISI System is designated as a Safety Class 1 load because it weighs greater that 1500 lbs and must be lifted over fuel in an open reactor vessel.

DESCRIPTION

The PaR Model ISI-2 Inservice Inspection Positioning System weighs less than 4000 lbs. including all attachments and consists of the following major assemblies. (See Figure 1)

a) Three Support Legs - including clamps to engage reactor guide studs

b) Telescoping Tube Hoist

c) Inspection Booms

Telescoping Tube Hoist Assembly

The hoist assembly provides vertical travel and lateral constraint for the inspection booms. The assembly includes a set of vertical telescoping tubes, hoist drive system, position indicating system and means for attaching the inspection booms.

Components in contact with the pool water are fabricated from aluminum and stainless steel. Bearing materials are compatible with the pool water.

The telescoping tube assembly has five concentric tubes. The outer tube is stationary, and is attached to the tripod base support structure. The fixed tube also serves as a mounting frame for the hoist drive.

The hoist drive includes a DC motor, enclosed gearbox, redundant electric brakes, and dual grooved cable drum which provide redundant hoist cable reeving.

Rotary adjustable geared up and down limit switches are provided to limit tube travel. Slack cable limit switches are also provided which stop tube travel if one of the dual cable reeving systems goes slack.

Inspection

Via the drum housing cover, the hoist cables are inspected prior to use if they have not been inspected within the previous twelve months for signs of wear and replaced if required. When replacement is necessary, the hoist is traveled through its complete range. New cable is installed so that the same number of wraps is maintained and the slack limit switches reset.

SPECIAL LIFTING DEVICE: LIFTING BAIL (FIGURE 2)

The design stresses for the lifting bail and its attachment to the hoist drive housing are within the allowable stress for normal operating conditions. The allowable stress is 1/3 of the material yield strength or 1/5 of the average ultimate strength, whichever is lower.

MATERIALS

Lift Bail - - - - - - low carbon steel (LCS)

Hoist Housing - - - - 6061-T6 aluminum

Bolts - - - - - - - - alloy steel, SAE grade 5

Shoulder Bolts - - - alloy steel (UNBRAKO or equal)

NOTE: Materials were specified as listed above. Material certification is not available.

PROPERTIES AND ALLOWABLES

	LCS	6061	SAE 5	UNBRAKO
Tensile, ksi	63	42	120	140
Yield, ksi	35	35	100	120
F_t, ksi	11.6	8.4	24.0	28.0
F_b, ksi	11.6	8.4	24.0	28.0
F_v, ksi	8.1	5.9	16.8	19.6

* Shear taken as .7 times tensile

Testing

The lifting bail shall be tested prior to use if it has not been tested within the previous twelve months. At least one member of the nondestructive examination crew performing the examinations per references 1 and 2 below shall be a minimum of Level II in accordance with reference 3.

Test Requirements

1. All bolts shall be inspected utilizing the liquid penetrant (Reference 1) or magnetic particle (Reference 2) examination method.

2. Perform a 150% load test on the lifting bail (6000 $\pm$ 200 lbs.)

3. Visually inspect all bolts and welds for defects or permanent deformation.

4. Inspect bolts and welds per Reference 1 or 2.

5. Defective bolts shall be replaced. Defective welds may be repaired and shall be subjected to a repeat load test.

6. This load testing shall also be repeated prior to use following any major maintenance or alteration. Major maintenance or alteration is defined as a repair or design change in which load bearing members are subjected to heating above 300°F (150°C), removal of significant quantities of metal, welding or other surface repair or plastic deformation of metal.

References:

1. Liquid Penetrant Examination Procedure, OP-9.4, latest revision.

2. Magnetic Particle Examination Procedure, OP-9.2, latest revision.

3. Certification Program for Nondestructive Examination Personnel, NQAI 2.4, latest revision.

BOLTING

The load bearing components of the Reactor Vessel ISI System are the lifting bail, the upper hoist support housing, extension tubes, supporting legs and the inspection boom. The load bearing bolting materials for these components and their material properties are the following:

Material	Yield Strength (psi)	Ultimate Strength (psi)
Aluminum 6061-T6	40,000	45,000
Stainless Steel-Series 300	30,000	80,000
Alloy Steel-Grade 2		69,000

By analysis, the bolting stresses have been determined to be well below the maximum allowable stresses. The maximum allowable stresses for tension, compression and bending are considered to be 1/5 of the material ultimate strength or 1/3 of the material yield strength, whichever is lower. The maximum allowable shear stresses are 67% of the above and bearing stresses are 45% of the yield strength. (See Table 1)

CONCLUSION

The requirements of NUREG-0612 have been satisfied for lifting of the Reactor Vessel Weld Inservice Inspection Positioning System at San Onofre Units 2 and 3.

ISI-2 REACTOR INSPECTION TOOL

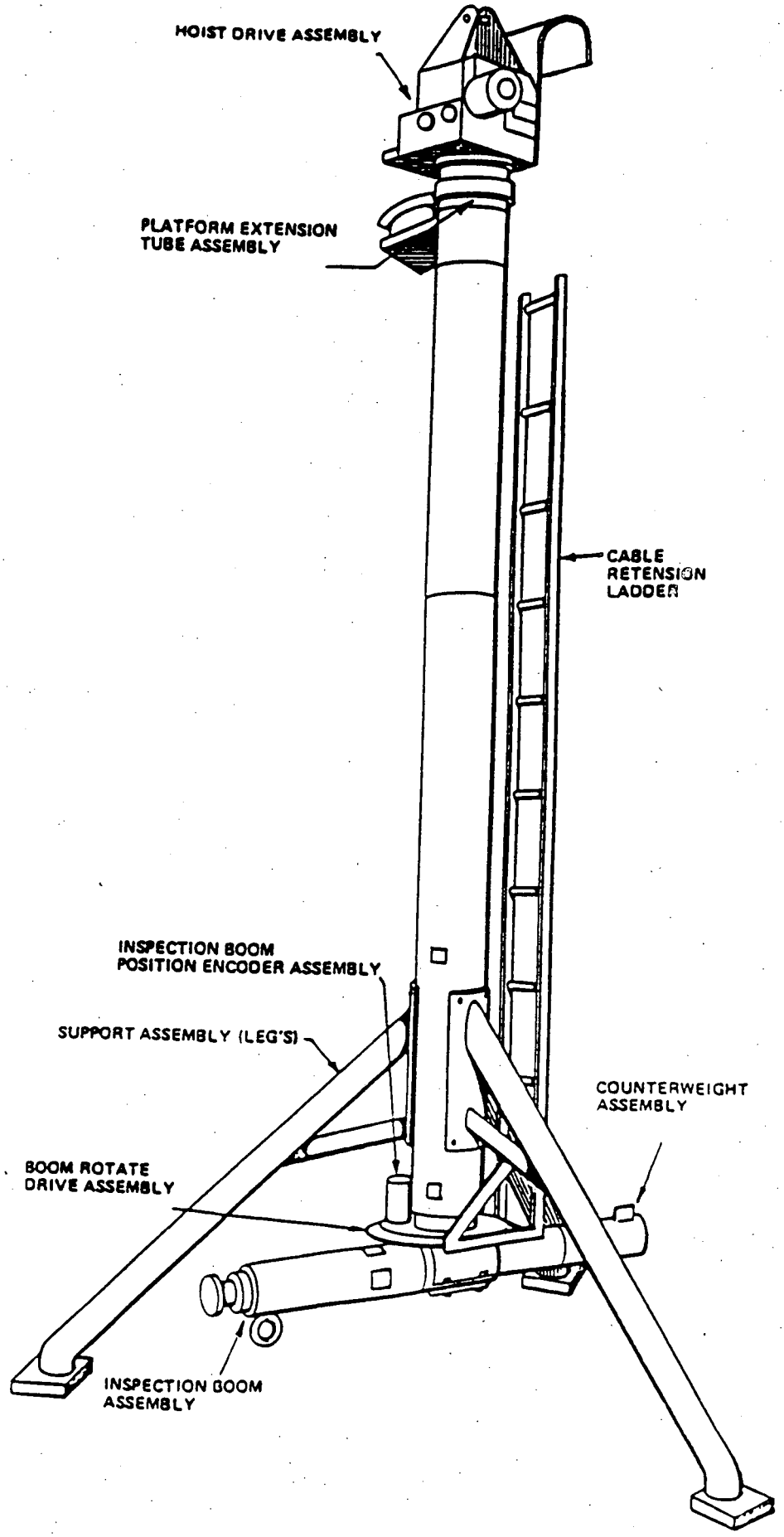

FIGURE 1

CHKD. BY GEB DATE 5-7-82

JOB NO. 3377

4.1 GENERAL ARRANGEMENT

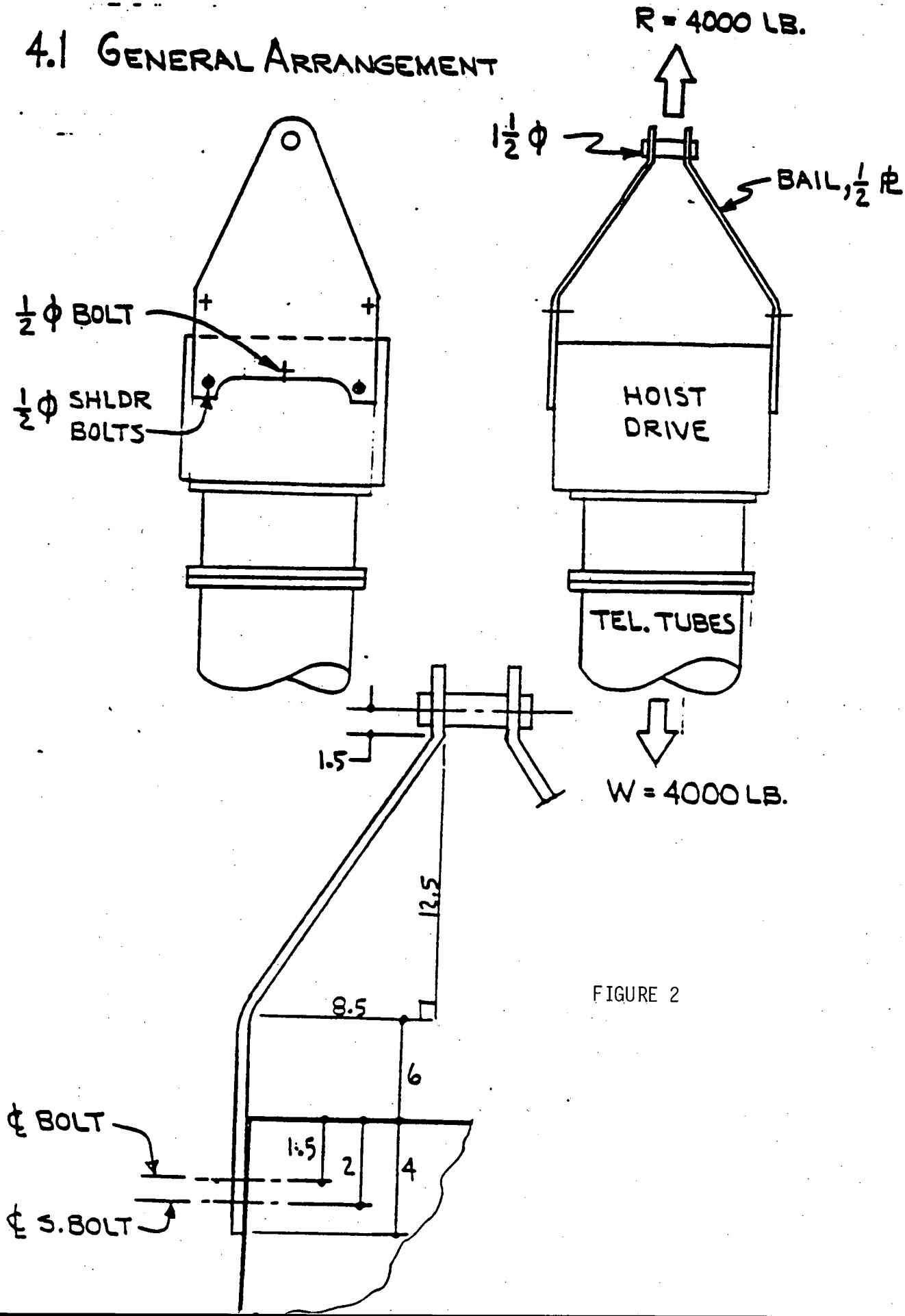

FIGURE 2

		Maximum Allowable Design Strength	BOLT STRESS ANALYSIS				
			1/2 x 13 NCSB Bail	1/2 x 13 NC Bail	3/4 x 10 NC Flange	3/4 x 10 NC Legs	1/2 x 20 NC Boom
Stainless Steel Series 300	Tensile	10,000 psi			998 psi		1572 psi
	Shear	6,700 psi				665 psi	
No. 2 Alloy Steel	Shear	13,800 psi	2547 psi	3523 psi			
Aluminum 6061-T6	Shear	6,030 psi					2174 psi

Table 1. Bolt Stress Analysis

NUREG 0612 EVALUATION
REACTOR VESSEL INSERVICE INSPECTION (ISI) POSITIONING SYSTEM
San Onofre Nuclear Generating Station, Units 2 and 3

FUNCTION

The Reactor Vessel ISI System is used to perform inservice inspections of the reactor vessel welds including the vertical and horizontal welds, the bottom hemisphere welds, and the inlet and outlet nozzle welds.

OPERATION

The Reactor Vessel ISI System is lifted by the containment polar crane using a lifting bail hung on the polar crane hook and is placed on the reactor vessel flange. The ISI System is supported on the reactor vessel top flange by three legs with mounting clamps used to position and lock the system in place on two reactor vessel guide studs. Lifting of the ISI system by the polar crane is performed in accordance with an approved station procedure which meets the requirements of NUREG-0612.

SAFETY CLASS

The Reactor Vessel ISI System is designated as a Safety Class 1 load because it weighs greater that 1500 lbs and must be lifted over fuel in an open reactor vessel.

DESCRIPTION

The PaR Model ISI-2 Inservice Inspection Positioning System weighs less than 4000 lbs. including all attachments and consists of the following major assemblies. (See Figure 1)

a) Three Support Legs - including clamps to engage reactor guide studs

b) Telescoping Tube Hoist

c) Inspection Booms

Telescoping Tube Hoist Assembly

The hoist assembly provides vertical travel and lateral constraint for the inspection booms. The assembly includes a set of vertical telescoping tubes, hoist drive system, position indicating system and means for attaching the inspection booms.

Components in contact with the pool water are fabricated from aluminum and stainless steel. Bearing materials are compatible with the pool water.

The telescoping tube assembly has five concentric tubes. The outer tube is stationary, and is attached to the tripod base support structure. The fixed tube also serves as a mounting frame for the hoist drive.

The hoist drive includes a DC motor, enclosed gearbox, redundant electric brakes, and dual grooved cable drum which provide redundant hoist cable reeving.

Rotary adjustable geared up and down limit switches are provided to limit tube travel. Slack cable limit switches are also provided which stop tube travel if one of the dual cable reeving systems goes slack.

Inspection

Via the drum housing cover, the hoist cables are inspected prior to use if they have not been inspected within the previous twelve months for signs of wear and replaced if required. When replacement is necessary, the hoist is traveled through its complete range. New cable is installed so that the same number of wraps is maintained and the slack limit switches reset.

SPECIAL LIFTING DEVICE: LIFTING BAIL (FIGURE 2)

The design stresses for the lifting bail and its attachment to the hoist drive housing are within the allowable stress for normal operating conditions. The allowable stress is 1/3 of the material yield strength or 1/5 of the average ultimate strength, whichever is lower.

MATERIALS

Lift Bail - - - - - - low carbon steel (LCS)

Hoist Housing - - - - 6061-T6 aluminum

Bolts - - - - - - - - alloy steel, SAE grade 5

Shoulder Bolts - - - alloy steel (UNBRAKO or equal)

NOTE: Materials were specified as listed above. Material certification is not available.

PROPERTIES AND ALLOWABLES

	LCS	6061	SAE 5	UNBRAKO
Tensile, ksi	63	42	120	140
Yield, ksi	35	35	100	120
F_t, ksi	11.6	8.4	24.0	28.0
F_b, ksi	11.6	8.4	24.0	28.0
F_v, ksi	8.1	5.9	16.8	19.6

* Shear taken as .7 times tensile

Testing

The lifting bail shall be tested prior to use if it has not been tested within the previous twelve months. At least one member of the nondestructive examination crew performing the examinations per references 1 and 2 below shall be a minimum of Level II in accordance with reference 3.

Test Requirements

1. All bolts shall be inspected utilizing the liquid penetrant (Reference 1) or magnetic particle (Reference 2) examination method.

2. Perform a 150% load test on the lifting bail (6000 ± 200 lbs.)

3. Visually inspect all bolts and welds for defects or permanent deformation.

4. Inspect bolts and welds per Reference 1 or 2.

5. Defective bolts shall be replaced. Defective welds may be repaired and shall be subjected to a repeat load test.

6. This load testing shall also be repeated prior to use following any major maintenance or alteration. Major maintenance or alteration is defined as a repair or design change in which load bearing members are subjected to heating above 300°F (150°C), removal of significant quantities of metal, welding or other surface repair or plastic deformation of metal.

References:

1. Liquid Penetrant Examination Procedure, OP-9.4, latest revision.

2. Magnetic Particle Examination Procedure, OP-9.2, latest revision.

3. Certification Program for Nondestructive Examination Personnel, NQAI 2.4, latest revision.

BOLTING

The load bearing components of the Reactor Vessel ISI System are the lifting bail, the upper hoist support housing, extension tubes, supporting legs and the inspection boom. The load bearing bolting materials for these components and their material properties are the following:

Material	Yield Strength (psi)	Ultimate Strength (psi)
Aluminum 6061-T6	40,000	45,000
Stainless Steel-Series 300	30,000	80,000
Alloy Steel-Grade 2		69,000

By analysis, the bolting stresses have been determined to be well below the maximum allowable stresses. The maximum allowable stresses for tension, compression and bending are considered to be 1/5 of the material ultimate strength or 1/3 of the material yield strength, whichever is lower. The maximum allowable shear stresses are 67% of the above and bearing stresses are 45% of the yield strength. (See Table 1)

CONCLUSION

The requirements of NUREG-0612 have been satisfied for lifting of the Reactor Vessel Weld Inservice Inspection Positioning System at San Onofre Units 2 and 3.

ISI-2 REACTOR INSPECTION TOOL

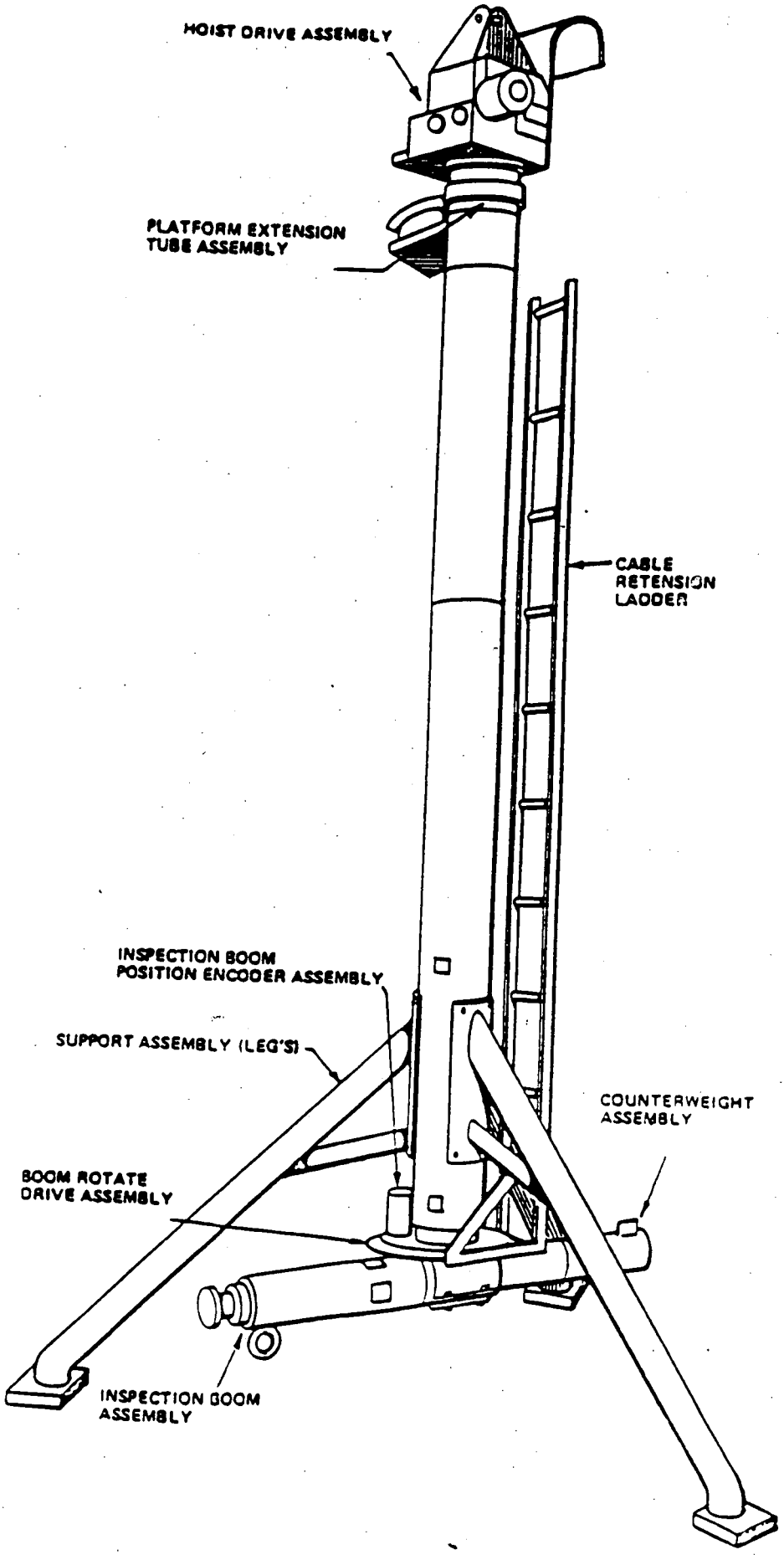

FIGURE 1

CHKD. BY GEB DATE 5-7-82

JOB NO. 3377

4.1 GENERAL ARRANGEMENT

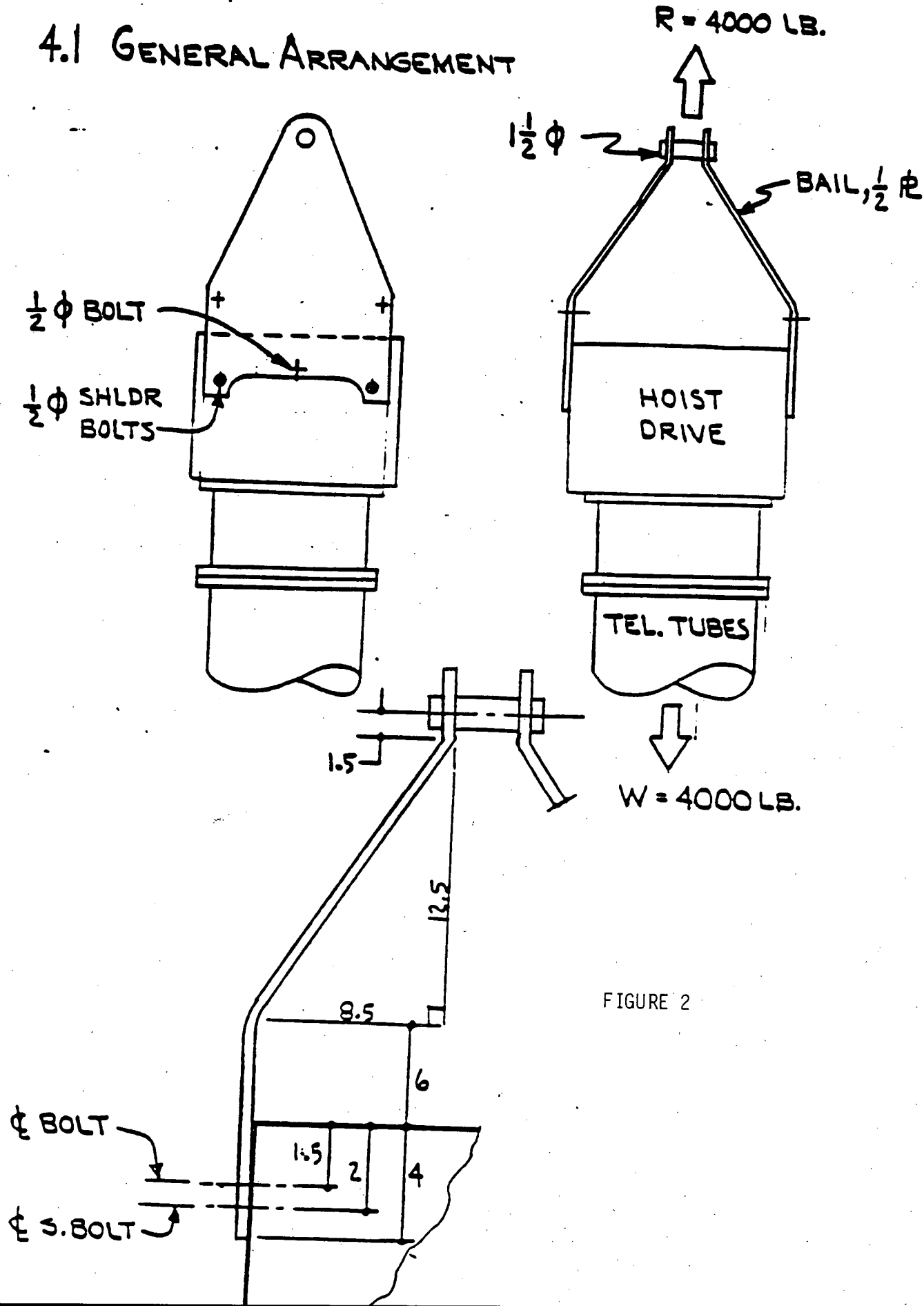

FIGURE 2

		Maximum Allowable Design Strength	BOLT STRESS ANALYSIS				
			1/2 x 13 NCSB Bail	1/2 x 13 NC Bail	3/4 x 10 NC Flange	3/4 x 10 NC Legs	1/2 x 20 NC Boom
Stainless Steel Series 300	Tensile	10,000 psi			998 psi		1572 psi
	Shear	6,700 psi				665 psi	
No. 2 Alloy Steel	Shear	13,800 psi	2547 psi	3523 psi			
Aluminum 6061-T6	Shear	6,030 psi					2174 psi

Table 1. Bolt Stress Analysis

NUREG 0612 EVALUATION
REACTOR VESSEL INSERVICE INSPECTION (ISI) POSITIONING SYSTEM
San Onofre Nuclear Generating Station, Units 2 and 3

FUNCTION

The Reactor Vessel ISI System is used to perform inservice inspections of the reactor vessel welds including the vertical and horizontal welds, the bottom hemisphere welds, and the inlet and outlet nozzle welds.

OPERATION

The Reactor Vessel ISI System is lifted by the containment polar crane using a lifting bail hung on the polar crane hook and is placed on the reactor vessel flange. The ISI System is supported on the reactor vessel top flange by three legs with mounting clamps used to position and lock the system in place on two reactor vessel guide studs. Lifting of the ISI system by the polar crane is performed in accordance with an approved station procedure which meets the requirements of NUREG-0612.

SAFETY CLASS

The Reactor Vessel ISI System is designated as a Safety Class 1 load because it weighs greater that 1500 lbs and must be lifted over fuel in an open reactor vessel.

DESCRIPTION

The PaR Model ISI-2 Inservice Inspection Positioning System weighs less than 4000 lbs. including all attachments and consists of the following major assemblies. (See Figure 1)

a) Three Support Legs - including clamps to engage reactor guide studs

b) Telescoping Tube Hoist

c) Inspection Booms

Telescoping Tube Hoist Assembly

The hoist assembly provides vertical travel and lateral constraint for the inspection booms. The assembly includes a set of vertical telescoping tubes, hoist drive system, position indicating system and means for attaching the inspection booms.

Components in contact with the pool water are fabricated from aluminum and stainless steel. Bearing materials are compatible with the pool water.

The telescoping tube assembly has five concentric tubes. The outer tube is stationary, and is attached to the tripod base support structure. The fixed tube also serves as a mounting frame for the hoist drive.

The hoist drive includes a DC motor, enclosed gearbox, redundant electric brakes, and dual grooved cable drum which provide redundant hoist cable reeving.

Rotary adjustable geared up and down limit switches are provided to limit tube travel. Slack cable limit switches are also provided which stop tube travel if one of the dual cable reeving systems goes slack.

Inspection

Via the drum housing cover, the hoist cables are inspected prior to use if they have not been inspected within the previous twelve months for signs of wear and replaced if required. When replacement is necessary, the hoist is traveled through its complete range. New cable is installed so that the same number of wraps is maintained and the slack limit switches reset.

SPECIAL LIFTING DEVICE: LIFTING BAIL (FIGURE 2)

The design stresses for the lifting bail and its attachment to the hoist drive housing are within the allowable stress for normal operating conditions. The allowable stress is 1/3 of the material yield strength or 1/5 of the average ultimate strength, whichever is lower.

MATERIALS

Lift Bail - - - - - - low carbon steel (LCS)

Hoist Housing - - - - 6061-T6 aluminum

Bolts - - - - - - - - alloy steel, SAE grade 5

Shoulder Bolts - - - alloy steel (UNBRAKO or equal)

NOTE: Materials were specified as listed above. Material certification is not available.

PROPERTIES AND ALLOWABLES

	LCS	6061	SAE 5	UNBRAKO
Tensile, ksi	63	42	120	140
Yield, ksi	35	35	100	120
F_t, ksi	11.6	8.4	24.0	28.0
F_b, ksi	11.6	8.4	24.0	28.0
F_v, ksi	8.1	5.9	16.8	19.6

* Shear taken as .7 times tensile

Testing

The lifting bail shall be tested prior to use if it has not been tested within the previous twelve months. At least one member of the nondestructive examination crew performing the examinations per references 1 and 2 below shall be a minimum of Level II in accordance with reference 3.

Test Requirements

1. All bolts shall be inspected utilizing the liquid penetrant (Reference 1) or magnetic particle (Reference 2) examination method.

2. Perform a 150% load test on the lifting bail (6000 ± 200 lbs.)

3. Visually inspect all bolts and welds for defects or permanent deformation.

4. Inspect bolts and welds per Reference 1 or 2.

5. Defective bolts shall be replaced. Defective welds may be repaired and shall be subjected to a repeat load test.

6. This load testing shall also be repeated prior to use following any major maintenance or alteration. Major maintenance or alteration is defined as a repair or design change in which load bearing members are subjected to heating above 300°F (150°C), removal of significant quantities of metal, welding or other surface repair or plastic deformation of metal.

References:

1. Liquid Penetrant Examination Procedure, OP-9.4, latest revision.

2. Magnetic Particle Examination Procedure, OP-9.2, latest revision.

3. Certification Program for Nondestructive Examination Personnel, NQAI 2.4, latest revision.

BOLTING

The load bearing components of the Reactor Vessel ISI System are the lifting bail, the upper hoist support housing, extension tubes, supporting legs and the inspection boom. The load bearing bolting materials for these components and their material properties are the following:

Material	Yield Strength (psi)	Ultimate Strength (psi)
Aluminum 6061-T6	40,000	45,000
Stainless Steel-Series 300	30,000	80,000
Alloy Steel-Grade 2		69,000

By analysis, the bolting stresses have been determined to be well below the maximum allowable stresses. The maximum allowable stresses for tension, compression and bending are considered to be 1/5 of the material ultimate strength or 1/3 of the material yield strength, whichever is lower. The maximum allowable shear stresses are 67% of the above and bearing stresses are 45% of the yield strength. (See Table 1)

CONCLUSION

The requirements of NUREG-0612 have been satisfied for lifting of the Reactor Vessel Weld Inservice Inspection Positioning System at San Onofre Units 2 and 3.

ISI-2 REACTOR INSPECTION TOOL

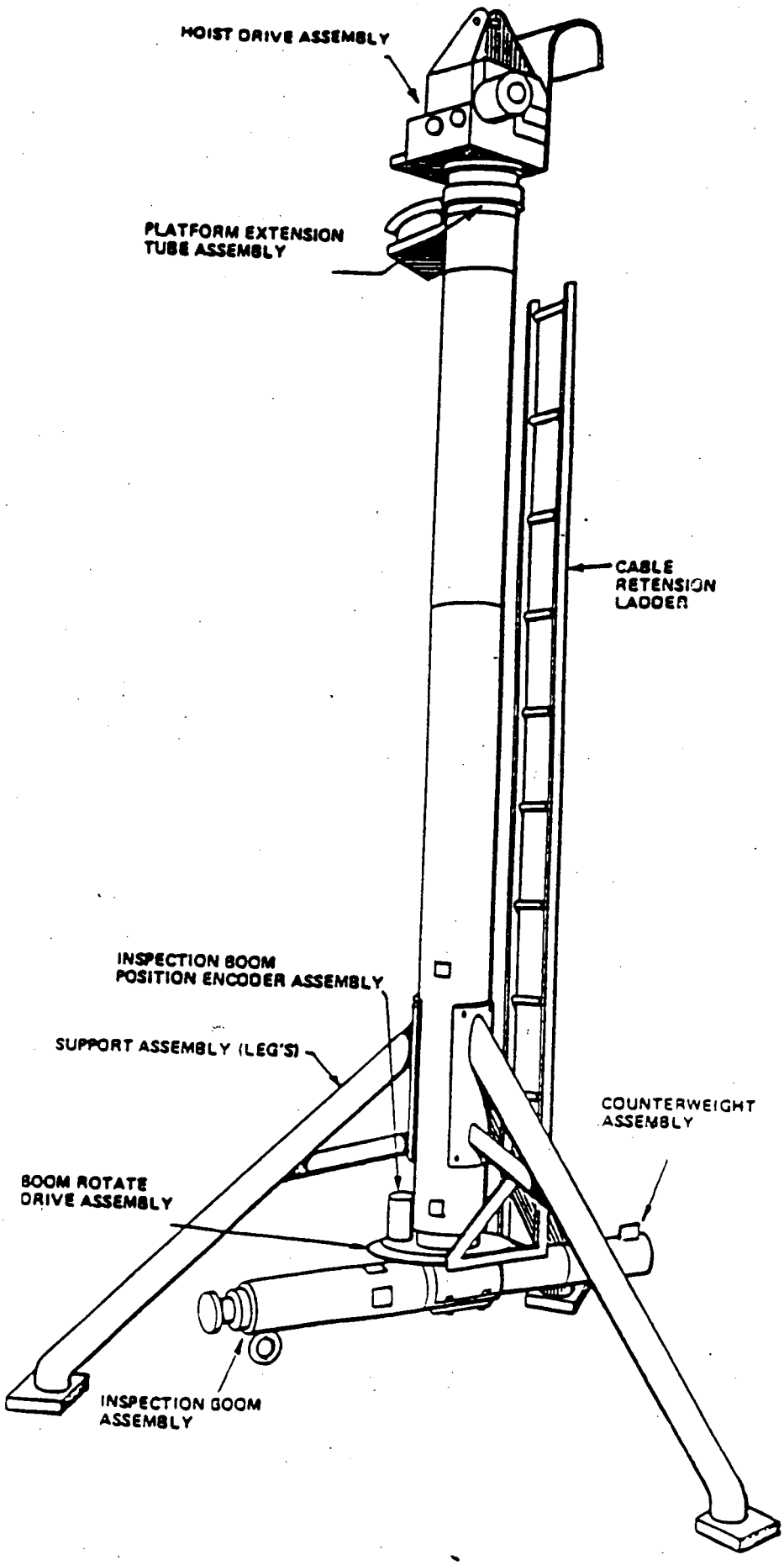

FIGURE 1

CHKD. BY GEB DATE 5-7-82

JOB NO. 3377

4.1 GENERAL ARRANGEMENT

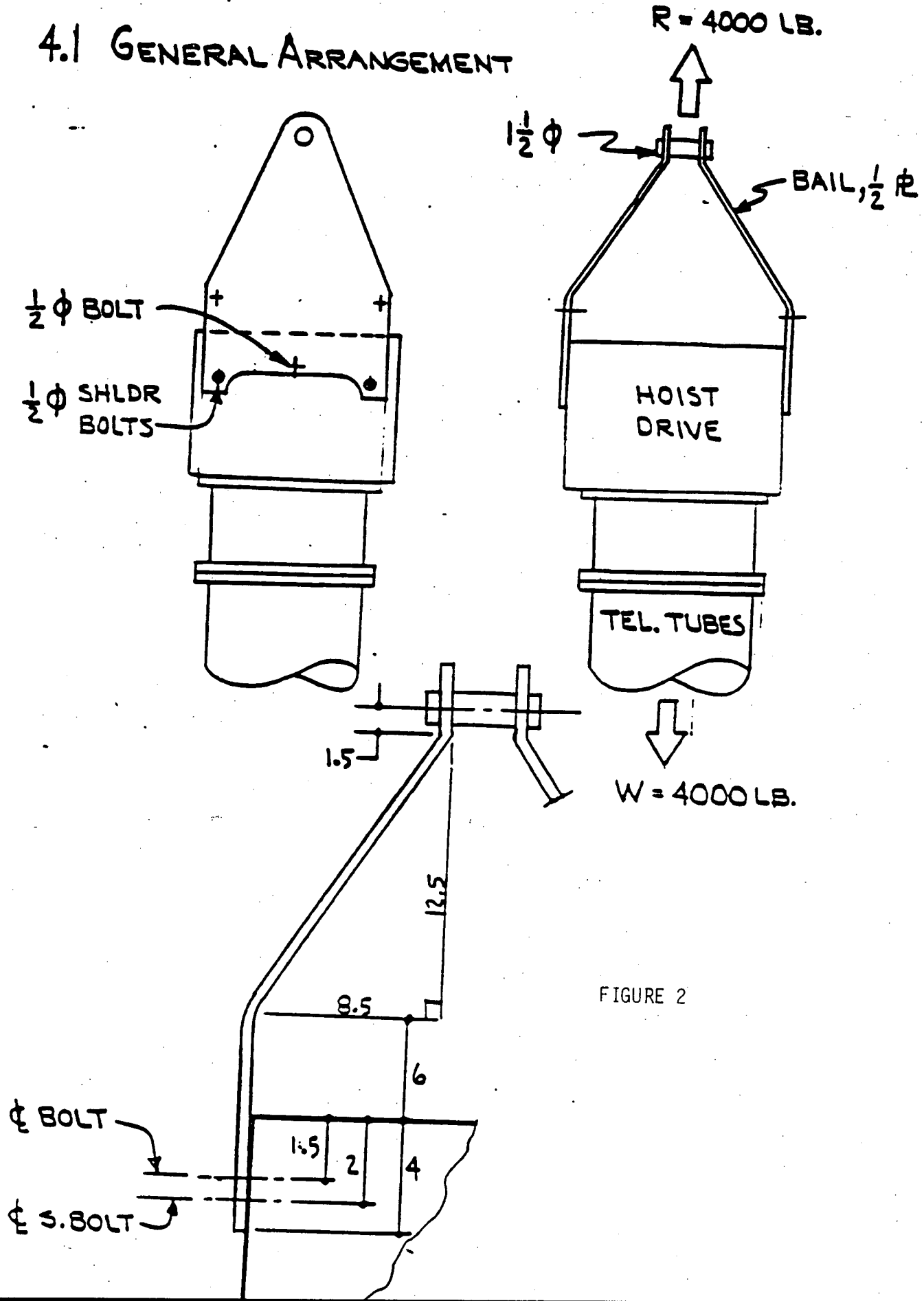

FIGURE 2

		Maximum Allowable Design Strength	BOLT STRESS ANALYSIS				
			1/2 x 13 NCSB Bail	1/2 x 13 NC Bail	3/4 x 10 NC Flange	3/4 x 10 NC Legs	1/2 x 20 NC Boom
Stainless Steel Series 300	Tensile	10,000 psi			998 psi		1572 psi
	Shear	6,700 psi				665 psi	
No. 2 Alloy Steel	Shear	13,800 psi	2547 psi	3523 psi			
Aluminum 6061-T6	Shear	6,030 psi					2174 psi

Table 1. Bolt Stress Analysis

NUREG 0612 EVALUATION
REACTOR VESSEL INSERVICE INSPECTION (ISI) POSITIONING SYSTEM
San Onofre Nuclear Generating Station, Units 2 and 3

FUNCTION

The Reactor Vessel ISI System is used to perform inservice inspections of the reactor vessel welds including the vertical and horizontal welds, the bottom hemisphere welds, and the inlet and outlet nozzle welds.

OPERATION

The Reactor Vessel ISI System is lifted by the containment polar crane using a lifting bail hung on the polar crane hook and is placed on the reactor vessel flange. The ISI System is supported on the reactor vessel top flange by three legs with mounting clamps used to position and lock the system in place on two reactor vessel guide studs. Lifting of the ISI system by the polar crane is performed in accordance with an approved station procedure which meets the requirements of NUREG-0612.

SAFETY CLASS

The Reactor Vessel ISI System is designated as a Safety Class 1 load because it weighs greater that 1500 lbs and must be lifted over fuel in an open reactor vessel.

DESCRIPTION

The PaR Model ISI-2 Inservice Inspection Positioning System weighs less than 4000 lbs. including all attachments and consists of the following major assemblies. (See Figure 1)

a) Three Support Legs - including clamps to engage reactor guide studs

b) Telescoping Tube Hoist

c) Inspection Booms

Telescoping Tube Hoist Assembly

The hoist assembly provides vertical travel and lateral constraint for the inspection booms. The assembly includes a set of vertical telescoping tubes, hoist drive system, position indicating system and means for attaching the inspection booms.

Components in contact with the pool water are fabricated from aluminum and stainless steel. Bearing materials are compatible with the pool water.

The telescoping tube assembly has five concentric tubes. The outer tube is stationary, and is attached to the tripod base support structure. The fixed tube also serves as a mounting frame for the hoist drive.

The hoist drive includes a DC motor, enclosed gearbox, redundant electric brakes, and dual grooved cable drum which provide redundant hoist cable reeving.

Rotary adjustable geared up and down limit switches are provided to limit tube travel. Slack cable limit switches are also provided which stop tube travel if one of the dual cable reeving systems goes slack.

Inspection

Via the drum housing cover, the hoist cables are inspected prior to use if they have not been inspected within the previous twelve months for signs of wear and replaced if required. When replacement is necessary, the hoist is traveled through its complete range. New cable is installed so that the same number of wraps is maintained and the slack limit switches reset.

SPECIAL LIFTING DEVICE: LIFTING BAIL (FIGURE 2)

The design stresses for the lifting bail and its attachment to the hoist drive housing are within the allowable stress for normal operating conditions. The allowable stress is 1/3 of the material yield strength or 1/5 of the average ultimate strength, whichever is lower.

MATERIALS

Lift Bail - - - - - - low carbon steel (LCS)

Hoist Housing - - - - 6061-T6 aluminum

Bolts - - - - - - - - alloy steel, SAE grade 5

Shoulder Bolts - - - alloy steel (UNBRAKO or equal)

NOTE: Materials were specified as listed above. Material certification is not available.

PROPERTIES AND ALLOWABLES

	LCS	6061	SAE 5	UNBRAKO
Tensile, ksi	63	42	120	140
Yield, ksi	35	35	100	120
F_t, ksi	11.6	8.4	24.0	28.0
F_b, ksi	11.6	8.4	24.0	28.0
F_v, ksi	8.1	5.9	16.8	19.6

* Shear taken as .7 times tensile

Testing

The lifting bail shall be tested prior to use if it has not been tested within the previous twelve months. At least one member of the nondestructive examination crew performing the examinations per references 1 and 2 below shall be a minimum of Level II in accordance with reference 3.

Test Requirements

1. All bolts shall be inspected utilizing the liquid penetrant (Reference 1) or magnetic particle (Reference 2) examination method.

2. Perform a 150% load test on the lifting bail (6000 ± 200 lbs.)

3. Visually inspect all bolts and welds for defects or permanent deformation.

4. Inspect bolts and welds per Reference 1 or 2.

5. Defective bolts shall be replaced. Defective welds may be repaired and shall be subjected to a repeat load test.

6. This load testing shall also be repeated prior to use following any major maintenance or alteration. Major maintenance or alteration is defined as a repair or design change in which load bearing members are subjected to heating above 300°F (150°C), removal of significant quantities of metal, welding or other surface repair or plastic deformation of metal.

References:

1. Liquid Penetrant Examination Procedure, OP-9.4, latest revision.

2. Magnetic Particle Examination Procedure, OP-9.2, latest revision.

3. Certification Program for Nondestructive Examination Personnel, NQAI 2.4, latest revision.

BOLTING

The load bearing components of the Reactor Vessel ISI System are the lifting bail, the upper hoist support housing, extension tubes, supporting legs and the inspection boom. The load bearing bolting materials for these components and their material properties are the following:

Material	Yield Strength (psi)	Ultimate Strength (psi)
Aluminum 6061-T6	40,000	45,000
Stainless Steel-Series 300	30,000	80,000
Alloy Steel-Grade 2		69,000

By analysis, the bolting stresses have been determined to be well below the maximum allowable stresses. The maximum allowable stresses for tension, compression and bending are considered to be 1/5 of the material ultimate strength or 1/3 of the material yield strength, whichever is lower. The maximum allowable shear stresses are 67% of the above and bearing stresses are 45% of the yield strength. (See Table 1)

CONCLUSION

The requirements of NUREG-0612 have been satisfied for lifting of the Reactor Vessel Weld Inservice Inspection Positioning System at San Onofre Units 2 and 3.

ISI-2 REACTOR INSPECTION TOOL

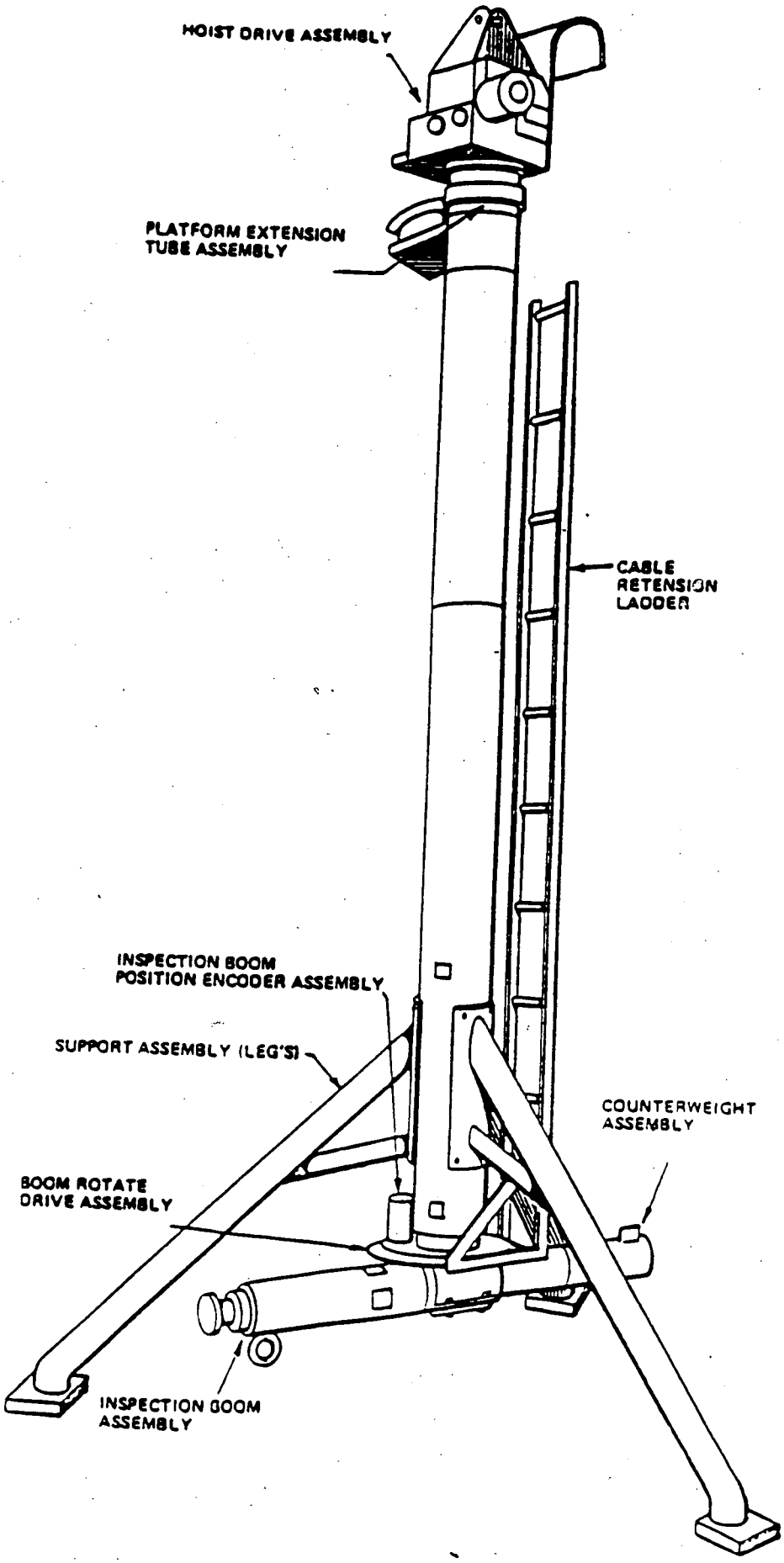

FIGURE 1

CHKD. BY GEB DATE 5-7-82

JOB NO. 3377

4.1 GENERAL ARRANGEMENT

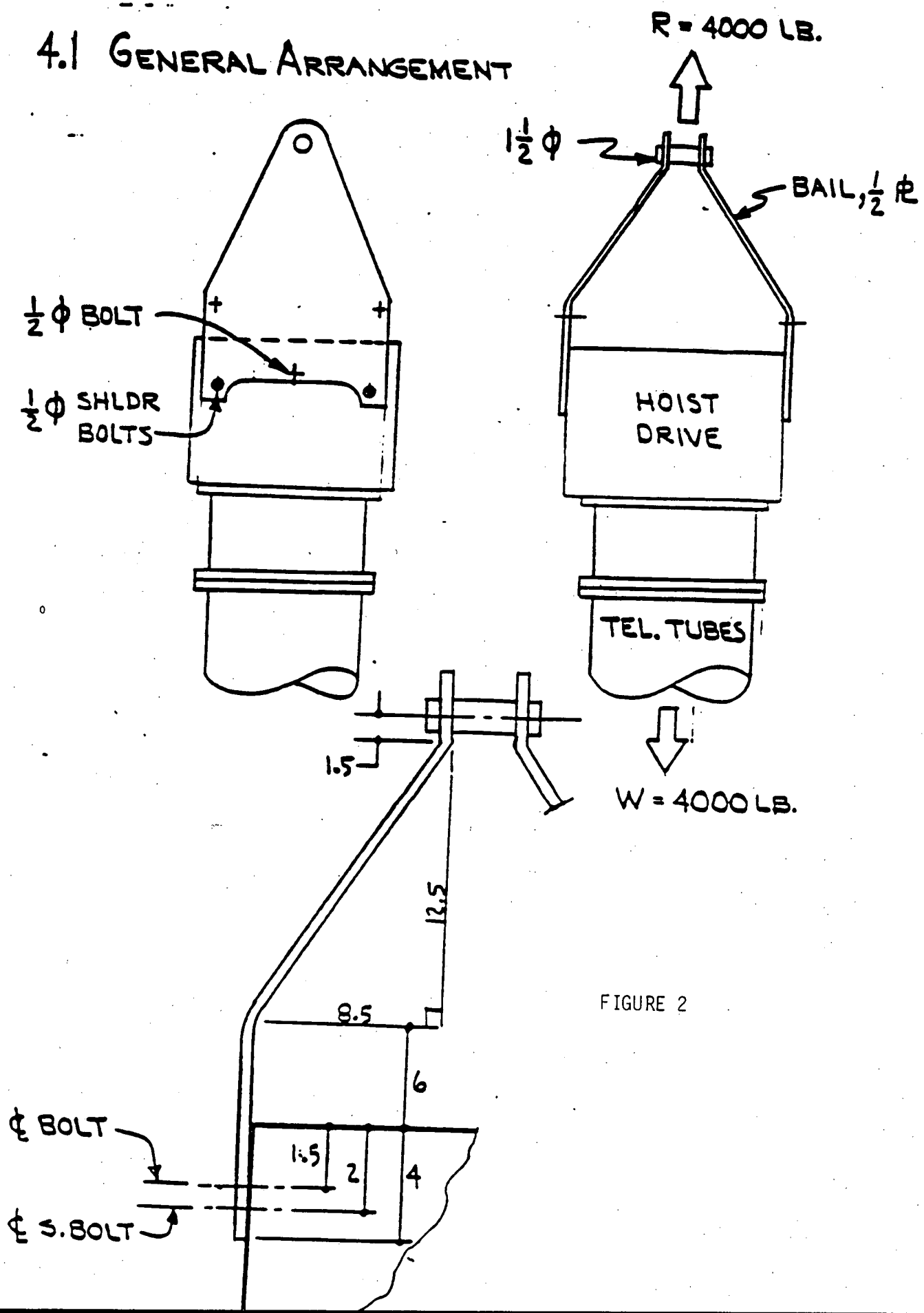

FIGURE 2

		Maximum Allowable Design Strength	BOLT STRESS ANALYSIS				
			1/2 x 13 NCSB Bail	1/2 x 13 NC Bail	3/4 x 10 NC Flange	3/4 x 10 NC Legs	1/2 x 20 NC Boom
Stainless Steel Series 300	Tensile	10,000 psi			998 psi		1572 psi
	Shear	6,700 psi				665 psi	
No. 2 Alloy Steel	Shear	13,800 psi	2547 psi	3523 psi			
Aluminum 6061-T6	Shear	6,030 psi					2174 psi

Table 1. Bolt Stress Analysis

NUREG 0612 EVALUATION
REACTOR VESSEL INSERVICE INSPECTION (ISI) POSITIONING SYSTEM
San Onofre Nuclear Generating Station, Units 2 and 3

FUNCTION

The Reactor Vessel ISI System is used to perform inservice inspections of the reactor vessel welds including the vertical and horizontal welds, the bottom hemisphere welds, and the inlet and outlet nozzle welds.

OPERATION

The Reactor Vessel ISI System is lifted by the containment polar crane using a lifting bail hung on the polar crane hook and is placed on the reactor vessel flange. The ISI System is supported on the reactor vessel top flange by three legs with mounting clamps used to position and lock the system in place on two reactor vessel guide studs. Lifting of the ISI system by the polar crane is performed in accordance with an approved station procedure which meets the requirements of NUREG-0612.

SAFETY CLASS

The Reactor Vessel ISI System is designated as a Safety Class 1 load because it weighs greater that 1500 lbs and must be lifted over fuel in an open reactor vessel.

DESCRIPTION

The PaR Model ISI-2 Inservice Inspection Positioning System weighs less than 4000 lbs. including all attachments and consists of the following major assemblies. (See Figure 1)

a) Three Support Legs - including clamps to engage reactor guide studs

b) Telescoping Tube Hoist

c) Inspection Booms

Telescoping Tube Hoist Assembly

The hoist assembly provides vertical travel and lateral constraint for the inspection booms. The assembly includes a set of vertical telescoping tubes, hoist drive system, position indicating system and means for attaching the inspection booms.

Components in contact with the pool water are fabricated from aluminum and stainless steel. Bearing materials are compatible with the pool water.

The telescoping tube assembly has five concentric tubes. The outer tube is stationary, and is attached to the tripod base support structure. The fixed tube also serves as a mounting frame for the hoist drive.

The hoist drive includes a DC motor, enclosed gearbox, redundant electric brakes, and dual grooved cable drum which provide redundant hoist cable reeving.

Rotary adjustable geared up and down limit switches are provided to limit tube travel. Slack cable limit switches are also provided which stop tube travel if one of the dual cable reeving systems goes slack.

Inspection

Via the drum housing cover, the hoist cables are inspected prior to use if they have not been inspected within the previous twelve months for signs of wear and replaced if required. When replacement is necessary, the hoist is traveled through its complete range. New cable is installed so that the same number of wraps is maintained and the slack limit switches reset.

SPECIAL LIFTING DEVICE: LIFTING BAIL (FIGURE 2)

The design stresses for the lifting bail and its attachment to the hoist drive housing are within the allowable stress for normal operating conditions. The allowable stress is 1/3 of the material yield strength or 1/5 of the average ultimate strength, whichever is lower.

MATERIALS

Lift Bail - - - - - - low carbon steel (LCS)

Hoist Housing - - - - 6061-T6 aluminum

Bolts - - - - - - - - alloy steel, SAE grade 5

Shoulder Bolts - - - alloy steel (UNBRAKO or equal)

NOTE: Materials were specified as listed above. Material certification is not available.

PROPERTIES AND ALLOWABLES

	LCS	6061	SAE 5	UNBRAKO
Tensile, ksi	63	42	120	140
Yield, ksi	35	35	100	120
F_t, ksi	11.6	8.4	24.0	28.0
F_b, ksi	11.6	8.4	24.0	28.0
F_v, ksi	8.1	5.9	16.8	19.6

* Shear taken as .7 times tensile

Testing

The lifting bail shall be tested prior to use if it has not been tested within the previous twelve months. At least one member of the nondestructive examination crew performing the examinations per references 1 and 2 below shall be a minimum of Level II in accordance with reference 3.

Test Requirements

1. All bolts shall be inspected utilizing the liquid penetrant (Reference 1) or magnetic particle (Reference 2) examination method.

2. Perform a 150% load test on the lifting bail (6000 ± 200 lbs.)

3. Visually inspect all bolts and welds for defects or permanent deformation.

4. Inspect bolts and welds per Reference 1 or 2.

5. Defective bolts shall be replaced. Defective welds may be repaired and shall be subjected to a repeat load test.

6. This load testing shall also be repeated prior to use following any major maintenance or alteration. Major maintenance or alteration is defined as a repair or design change in which load bearing members are subjected to heating above 300°F (150°C), removal of significant quantities of metal, welding or other surface repair or plastic deformation of metal.

References:

1. Liquid Penetrant Examination Procedure, OP-9.4, latest revision.

2. Magnetic Particle Examination Procedure, OP-9.2, latest revision.

3. Certification Program for Nondestructive Examination Personnel, NQAI 2.4, latest revision.

BOLTING

The load bearing components of the Reactor Vessel ISI System are the lifting bail, the upper hoist support housing, extension tubes, supporting legs and the inspection boom. The load bearing bolting materials for these components and their material properties are the following:

Material	Yield Strength (psi)	Ultimate Strength (psi)
Aluminum 6061-T6	40,000	45,000
Stainless Steel-Series 300	30,000	80,000
Alloy Steel-Grade 2		69,000

By analysis, the bolting stresses have been determined to be well below the maximum allowable stresses. The maximum allowable stresses for tension, compression and bending are considered to be 1/5 of the material ultimate strength or 1/3 of the material yield strength, whichever is lower. The maximum allowable shear stresses are 67% of the above and bearing stresses are 45% of the yield strength. (See Table 1)

CONCLUSION

The requirements of NUREG-0612 have been satisfied for lifting of the Reactor Vessel Weld Inservice Inspection Positioning System at San Onofre Units 2 and 3.

ISI-2 REACTOR INSPECTION TOOL

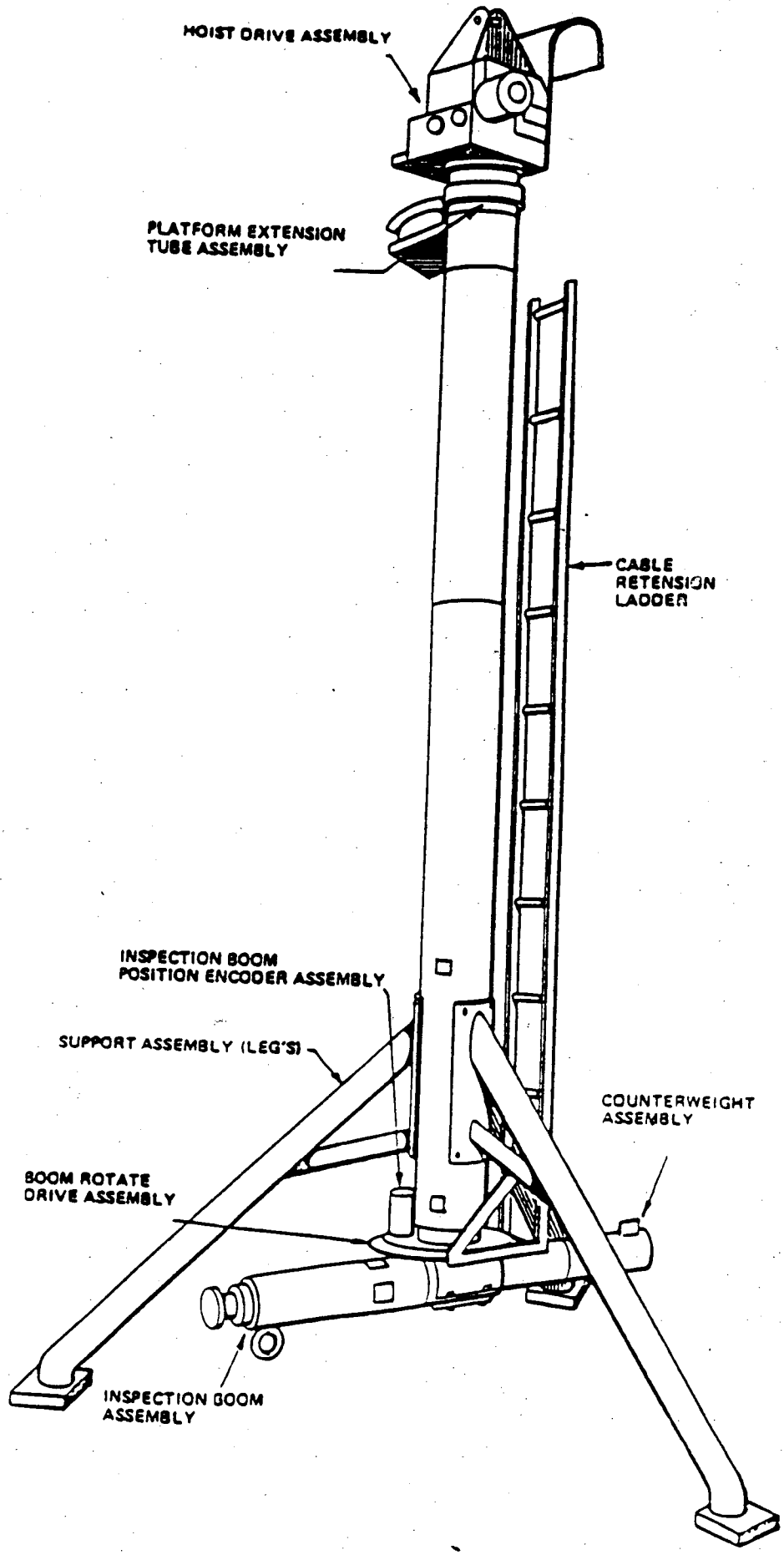

FIGURE 1

CHKD. BY GEO DATE 5-7-82

JOB NO. 3377

4.1 GENERAL ARRANGEMENT

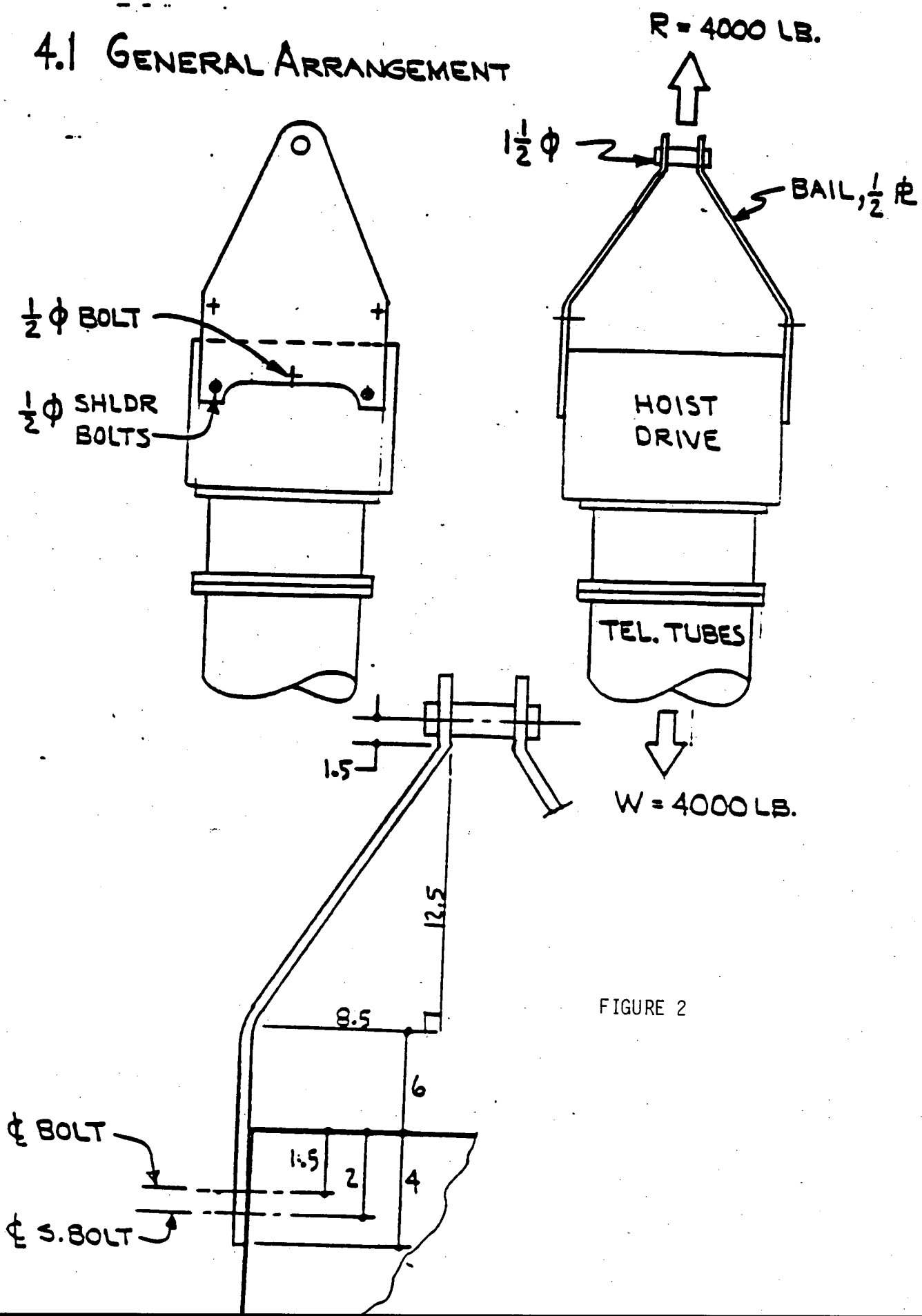

FIGURE 2

		Maximum Allowable Design Strength	BOLT STRESS ANALYSIS				
			1/2 x 13 NCSB Bail	1/2 x 13 NC Bail	3/4 x 10 NC Flange	3/4 x 10 NC Legs	1/2 x 20 NC Boom
Stainless Steel Series 300	Tensile	10,000 psi			998 psi		1572 psi
	Shear	6,700 psi				665 psi	
No. 2 Alloy Steel	Shear	13,800 psi	2547 psi	3523 psi			
Aluminum 6061-T6	Shear	6,030 psi					2174 psi

Table 1. Bolt Stress Analysis

NUREG 0612 EVALUATION
REACTOR VESSEL INSERVICE INSPECTION (ISI) POSITIONING SYSTEM
San Onofre Nuclear Generating Station, Units 2 and 3

FUNCTION

The Reactor Vessel ISI System is used to perform inservice inspections of the reactor vessel welds including the vertical and horizontal welds, the bottom hemisphere welds, and the inlet and outlet nozzle welds.

OPERATION

The Reactor Vessel ISI System is lifted by the containment polar crane using a lifting bail hung on the polar crane hook and is placed on the reactor vessel flange. The ISI System is supported on the reactor vessel top flange by three legs with mounting clamps used to position and lock the system in place on two reactor vessel guide studs. Lifting of the ISI system by the polar crane is performed in accordance with an approved station procedure which meets the requirements of NUREG-0612.

SAFETY CLASS

The Reactor Vessel ISI System is designated as a Safety Class 1 load because it weighs greater that 1500 lbs and must be lifted over fuel in an open reactor vessel.

DESCRIPTION

The PaR Model ISI-2 Inservice Inspection Positioning System weighs less than 4000 lbs. including all attachments and consists of the following major assemblies. (See Figure 1)

a) Three Support Legs - including clamps to engage reactor guide studs

b) Telescoping Tube Hoist

c) Inspection Booms

Telescoping Tube Hoist Assembly

The hoist assembly provides vertical travel and lateral constraint for the inspection booms. The assembly includes a set of vertical telescoping tubes, hoist drive system, position indicating system and means for attaching the inspection booms.

Components in contact with the pool water are fabricated from aluminum and stainless steel. Bearing materials are compatible with the pool water.

The telescoping tube assembly has five concentric tubes. The outer tube is stationary, and is attached to the tripod base support structure. The fixed tube also serves as a mounting frame for the hoist drive.

The hoist drive includes a DC motor, enclosed gearbox, redundant electric brakes, and dual grooved cable drum which provide redundant hoist cable reeving.

Rotary adjustable geared up and down limit switches are provided to limit tube travel. Slack cable limit switches are also provided which stop tube travel if one of the dual cable reeving systems goes slack.

Inspection

Via the drum housing cover, the hoist cables are inspected prior to use if they have not been inspected within the previous twelve months for signs of wear and replaced if required. When replacement is necessary, the hoist is traveled through its complete range. New cable is installed so that the same number of wraps is maintained and the slack limit switches reset.

SPECIAL LIFTING DEVICE: LIFTING BAIL (FIGURE 2)

The design stresses for the lifting bail and its attachment to the hoist drive housing are within the allowable stress for normal operating conditions. The allowable stress is 1/3 of the material yield strength or 1/5 of the average ultimate strength, whichever is lower.

MATERIALS

Lift Bail - - - - - - low carbon steel (LCS)

Hoist Housing - - - - 6061-T6 aluminum

Bolts - - - - - - - - alloy steel, SAE grade 5

Shoulder Bolts - - - alloy steel (UNBRAKO or equal)

NOTE: Materials were specified as listed above. Material certification is not available.

PROPERTIES AND ALLOWABLES

	LCS	6061	SAE 5	UNBRAKO
Tensile, ksi	63	42	120	140
Yield, ksi	35	35	100	120
F_t, ksi	11.6	8.4	24.0	28.0
F_b, ksi	11.6	8.4	24.0	28.0
F_v, ksi	8.1	5.9	16.8	19.6

* Shear taken as .7 times tensile

Testing

The lifting bail shall be tested prior to use if it has not been tested within the previous twelve months. At least one member of the nondestructive examination crew performing the examinations per references 1 and 2 below shall be a minimum of Level II in accordance with reference 3.

Test Requirements

1. All bolts shall be inspected utilizing the liquid penetrant (Reference 1) or magnetic particle (Reference 2) examination method.

2. Perform a 150% load test on the lifting bail (6000 ± 200 lbs.)

3. Visually inspect all bolts and welds for defects or permanent deformation.

4. Inspect bolts and welds per Reference 1 or 2.

5. Defective bolts shall be replaced. Defective welds may be repaired and shall be subjected to a repeat load test.

6. This load testing shall also be repeated prior to use following any major maintenance or alteration. Major maintenance or alteration is defined as a repair or design change in which load bearing members are subjected to heating above 300°F (150°C), removal of significant quantities of metal, welding or other surface repair or plastic deformation of metal.

References:

1. Liquid Penetrant Examination Procedure, OP-9.4, latest revision.

2. Magnetic Particle Examination Procedure, OP-9.2, latest revision.

3. Certification Program for Nondestructive Examination Personnel, NQAI 2.4, latest revision.

BOLTING

The load bearing components of the Reactor Vessel ISI System are the lifting bail, the upper hoist support housing, extension tubes, supporting legs and the inspection boom. The load bearing bolting materials for these components and their material properties are the following:

Material	Yield Strength (psi)	Ultimate Strength (psi)
Aluminum 6061-T6	40,000	45,000
Stainless Steel-Series 300	30,000	80,000
Alloy Steel-Grade 2		69,000

By analysis, the bolting stresses have been determined to be well below the maximum allowable stresses. The maximum allowable stresses for tension, compression and bending are considered to be 1/5 of the material ultimate strength or 1/3 of the material yield strength, whichever is lower. The maximum allowable shear stresses are 67% of the above and bearing stresses are 45% of the yield strength. (See Table 1)

CONCLUSION

The requirements of NUREG-0612 have been satisfied for lifting of the Reactor Vessel Weld Inservice Inspection Positioning System at San Onofre Units 2 and 3.

ISI-2 REACTOR INSPECTION TOOL

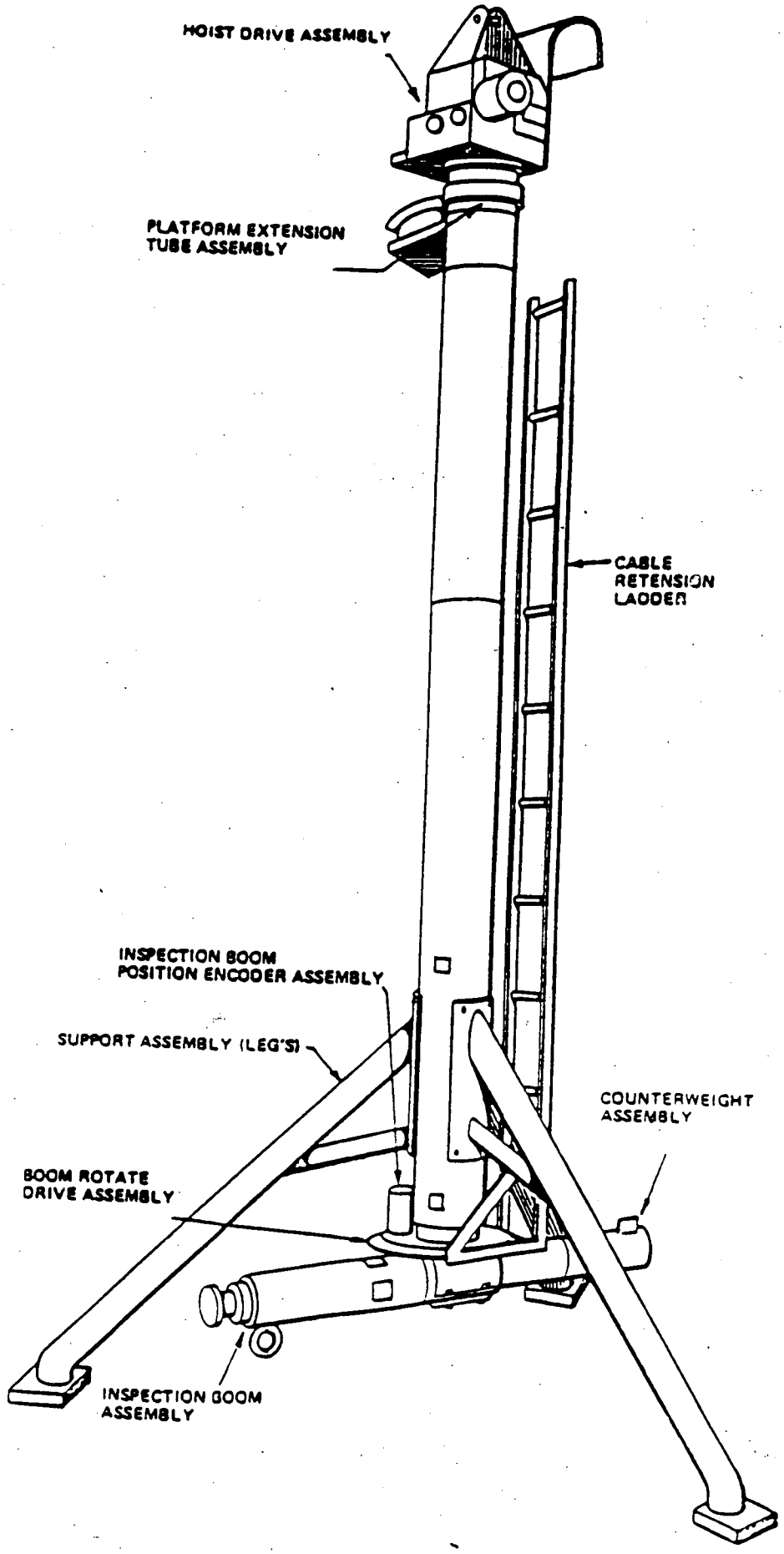

FIGURE 1

CHKD. BY GEB DATE 5-7-82

JOB NO. 3377

4.1 General Arrangement

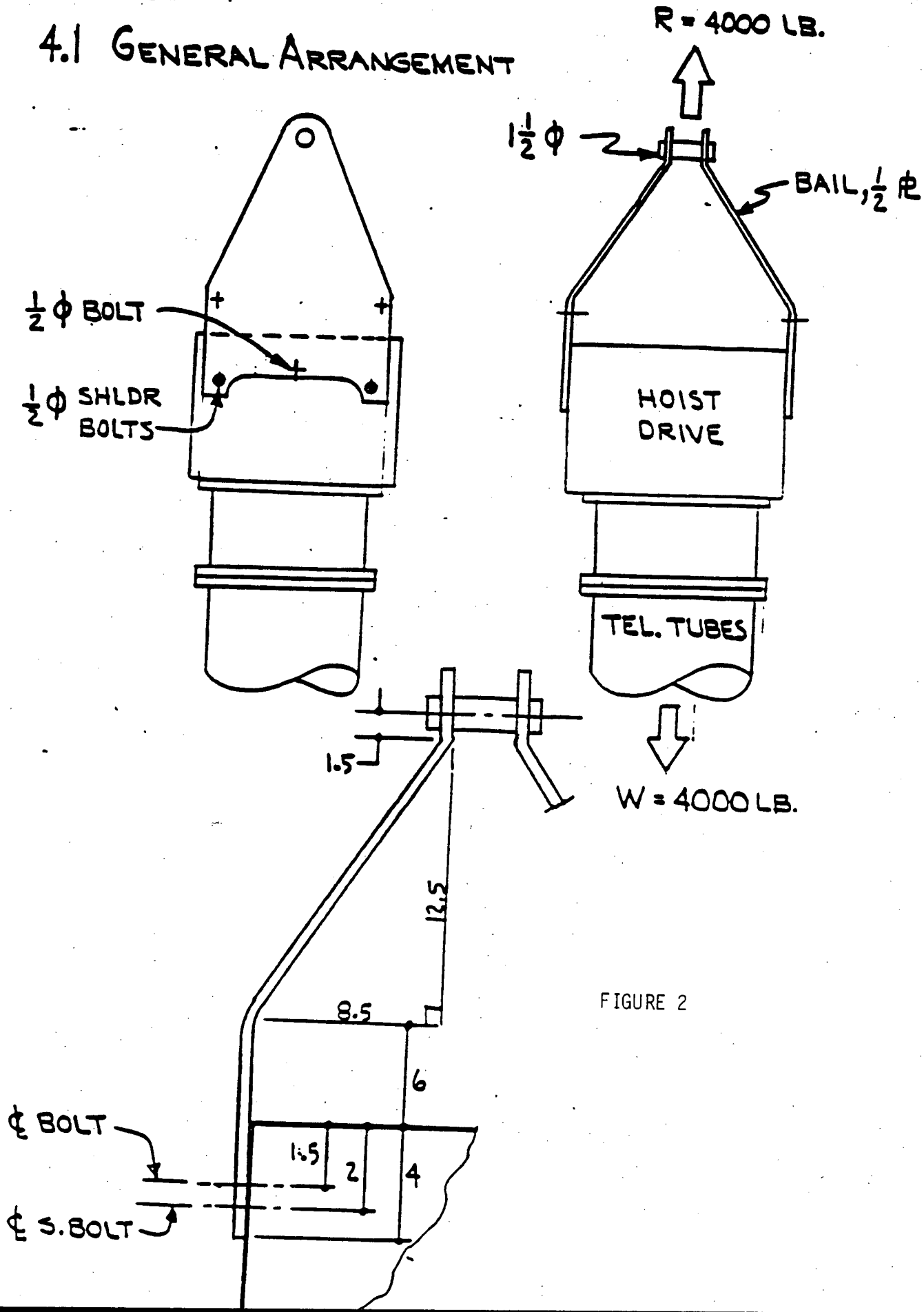

FIGURE 2

		Maximum Allowable Design Strength	BOLT STRESS ANALYSIS				
			1/2 x 13 NCSB Bail	1/2 x 13 NC Bail	3/4 x 10 NC Flange	3/4 x 10 NC Legs	1/2 x 20 NC Boom
Stainless Steel Series 300	Tensile	10,000 psi			998 psi		1572 psi
	Shear	6,700 psi				665 psi	
No. 2 Alloy Steel	Shear	13,800 psi	2547 psi	3523 psi			
Aluminum 6061-T6	Shear	6,030 psi					2174 psi

Table 1. Bolt Stress Analysis

NUREG 0612 EVALUATION
REACTOR VESSEL INSERVICE INSPECTION (ISI) POSITIONING SYSTEM
San Onofre Nuclear Generating Station, Units 2 and 3

FUNCTION

The Reactor Vessel ISI System is used to perform inservice inspections of the reactor vessel welds including the vertical and horizontal welds, the bottom hemisphere welds, and the inlet and outlet nozzle welds.

OPERATION

The Reactor Vessel ISI System is lifted by the containment polar crane using a lifting bail hung on the polar crane hook and is placed on the reactor vessel flange. The ISI System is supported on the reactor vessel top flange by three legs with mounting clamps used to position and lock the system in place on two reactor vessel guide studs. Lifting of the ISI system by the polar crane is performed in accordance with an approved station procedure which meets the requirements of NUREG-0612.

SAFETY CLASS

The Reactor Vessel ISI System is designated as a Safety Class 1 load because it weighs greater that 1500 lbs and must be lifted over fuel in an open reactor vessel.

DESCRIPTION

The PaR Model ISI-2 Inservice Inspection Positioning System weighs less than 4000 lbs. including all attachments and consists of the following major assemblies. (See Figure 1)

a) Three Support Legs - including clamps to engage reactor guide studs

b) Telescoping Tube Hoist

c) Inspection Booms

Telescoping Tube Hoist Assembly

The hoist assembly provides vertical travel and lateral constraint for the inspection booms. The assembly includes a set of vertical telescoping tubes, hoist drive system, position indicating system and means for attaching the inspection booms.

Components in contact with the pool water are fabricated from aluminum and stainless steel. Bearing materials are compatible with the pool water.

The telescoping tube assembly has five concentric tubes. The outer tube is stationary, and is attached to the tripod base support structure. The fixed tube also serves as a mounting frame for the hoist drive.

The hoist drive includes a DC motor, enclosed gearbox, redundant electric brakes, and dual grooved cable drum which provide redundant hoist cable reeving.

Rotary adjustable geared up and down limit switches are provided to limit tube travel. Slack cable limit switches are also provided which stop tube travel if one of the dual cable reeving systems goes slack.

Inspection

Via the drum housing cover, the hoist cables are inspected prior to use if they have not been inspected within the previous twelve months for signs of wear and replaced if required. When replacement is necessary, the hoist is traveled through its complete range. New cable is installed so that the same number of wraps is maintained and the slack limit switches reset.

SPECIAL LIFTING DEVICE: LIFTING BAIL (FIGURE 2)

The design stresses for the lifting bail and its attachment to the hoist drive housing are within the allowable stress for normal operating conditions. The allowable stress is 1/3 of the material yield strength or 1/5 of the average ultimate strength, whichever is lower.

MATERIALS

Lift Bail - - - - - - low carbon steel (LCS)

Hoist Housing - - - - 6061-T6 aluminum

Bolts - - - - - - - - alloy steel, SAE grade 5

Shoulder Bolts - - - alloy steel (UNBRAKO or equal)

NOTE: Materials were specified as listed above. Material certification is not available.

PROPERTIES AND ALLOWABLES

	LCS	6061	SAE 5	UNBRAKO
Tensile, ksi	63	42	120	140
Yield, ksi	35	35	100	120
F_t, ksi	11.6	8.4	24.0	28.0
F_b, ksi	11.6	8.4	24.0	28.0
F_v, ksi	8.1	5.9	16.8	19.6

* Shear taken as .7 times tensile

Testing

The lifting bail shall be tested prior to use if it has not been tested within the previous twelve months. At least one member of the nondestructive examination crew performing the examinations per references 1 and 2 below shall be a minimum of Level II in accordance with reference 3.

Test Requirements

1. All bolts shall be inspected utilizing the liquid penetrant (Reference 1) or magnetic particle (Reference 2) examination method.

2. Perform a 150% load test on the lifting bail (6000 ± 200 lbs.)

3. Visually inspect all bolts and welds for defects or permanent deformation.

4. Inspect bolts and welds per Reference 1 or 2.

5. Defective bolts shall be replaced. Defective welds may be repaired and shall be subjected to a repeat load test.

6. This load testing shall also be repeated prior to use following any major maintenance or alteration. Major maintenance or alteration is defined as a repair or design change in which load bearing members are subjected to heating above 300°F (150°C), removal of significant quantities of metal, welding or other surface repair or plastic deformation of metal.

References:

1. Liquid Penetrant Examination Procedure, OP-9.4, latest revision.

2. Magnetic Particle Examination Procedure, OP-9.2, latest revision.

3. Certification Program for Nondestructive Examination Personnel, NQAI 2.4, latest revision.

BOLTING

The load bearing components of the Reactor Vessel ISI System are the lifting bail, the upper hoist support housing, extension tubes, supporting legs and the inspection boom. The load bearing bolting materials for these components and their material properties are the following:

Material	Yield Strength (psi)	Ultimate Strength (psi)
Aluminum 6061-T6	40,000	45,000
Stainless Steel-Series 300	30,000	80,000
Alloy Steel-Grade 2		69,000

By analysis, the bolting stresses have been determined to be well below the maximum allowable stresses. The maximum allowable stresses for tension, compression and bending are considered to be 1/5 of the material ultimate strength or 1/3 of the material yield strength, whichever is lower. The maximum allowable shear stresses are 67% of the above and bearing stresses are 45% of the yield strength. (See Table 1)

CONCLUSION

The requirements of NUREG-0612 have been satisfied for lifting of the Reactor Vessel Weld Inservice Inspection Positioning System at San Onofre Units 2 and 3.

ISI-2 REACTOR INSPECTION TOOL

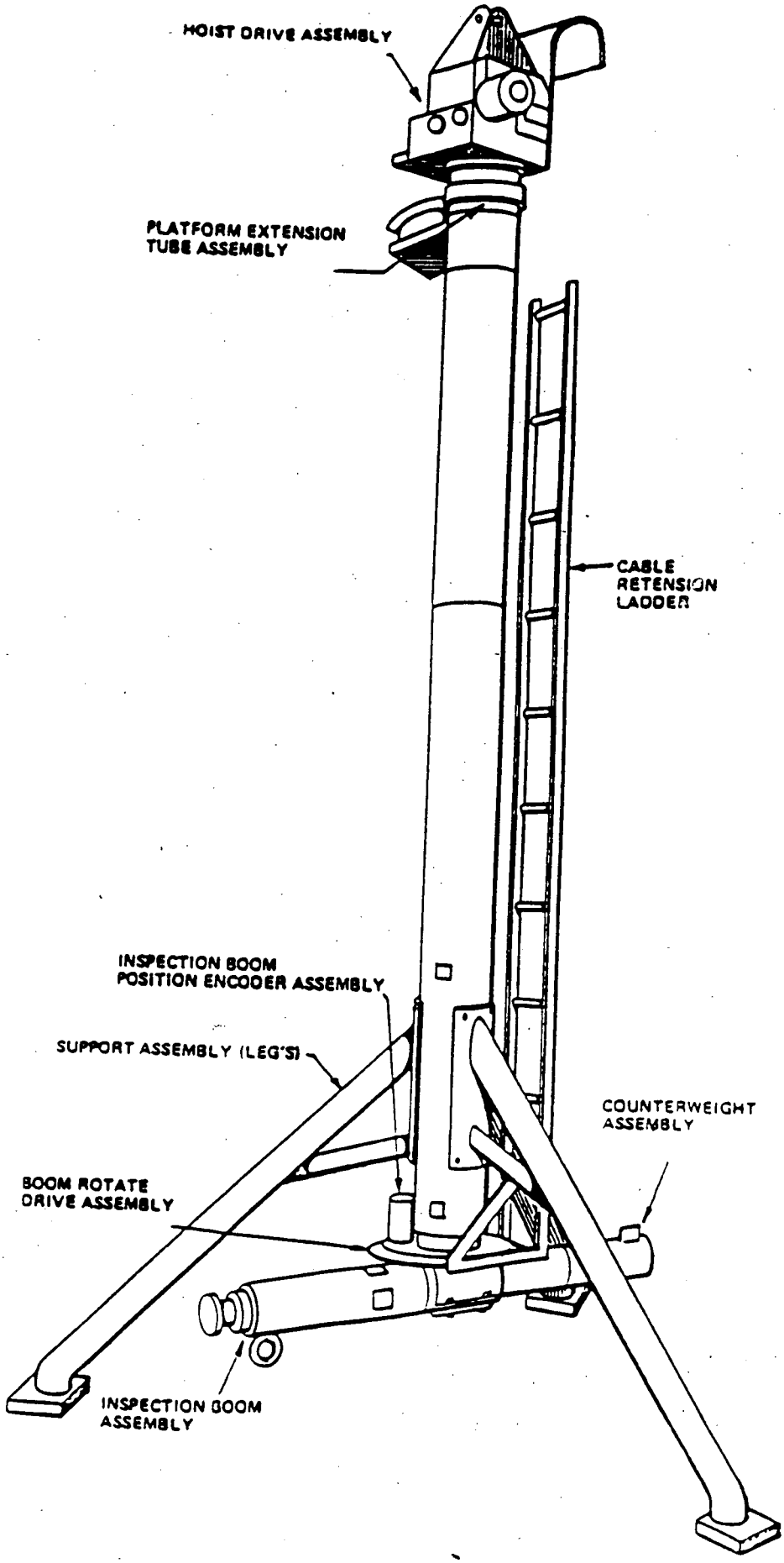

FIGURE 1

CHKD. BY GBB DATE 5-7-82

JOB NO. 3377

4.1 GENERAL ARRANGEMENT

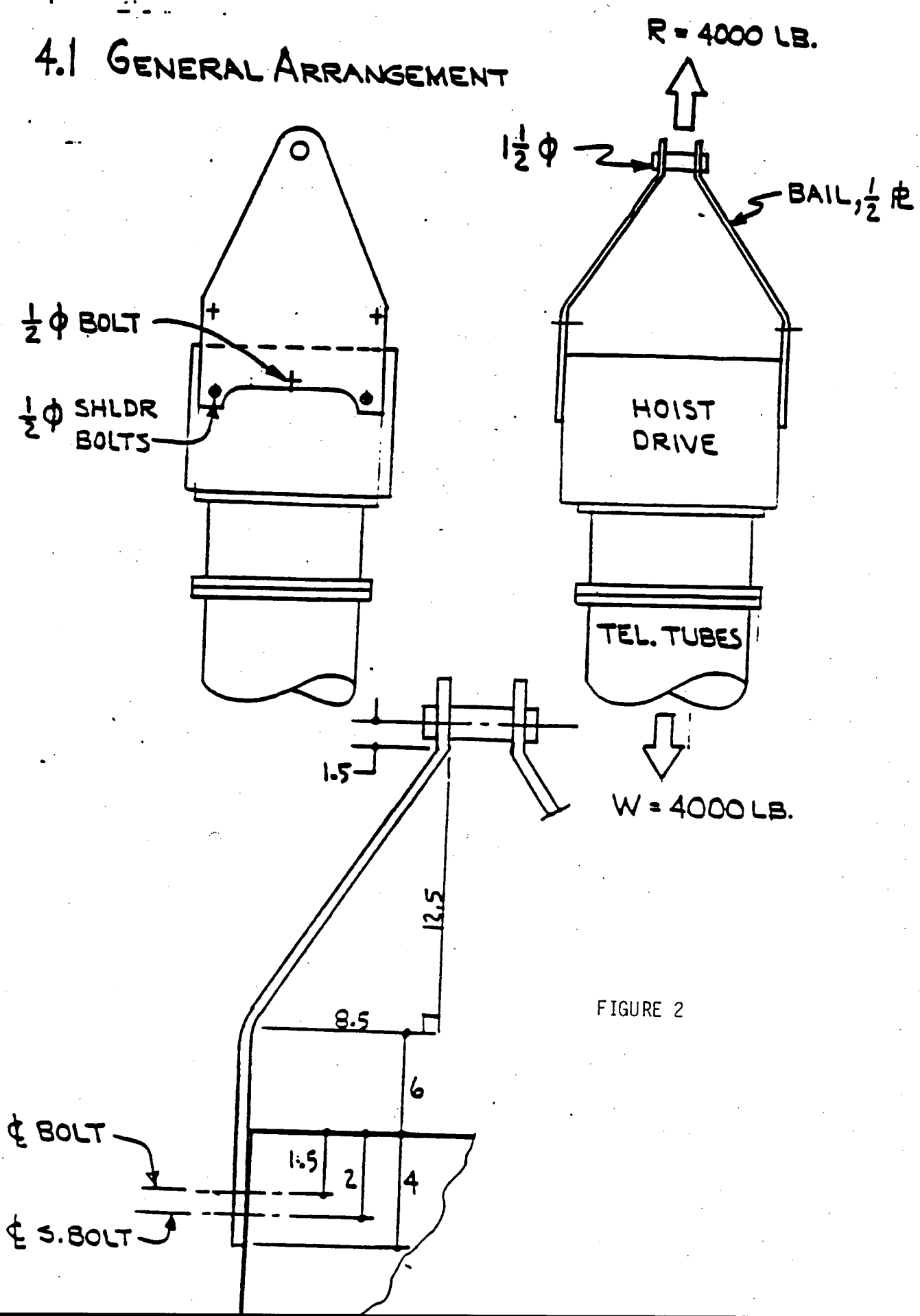

FIGURE 2

		Maximum Allowable Design Strength	BOLT STRESS ANALYSIS				
			1/2 x 13 NCSB Bail	1/2 x 13 NC Bail	3/4 x 10 NC Flange	3/4 x 10 NC Legs	1/2 x 20 NC Boom
Stainless Steel Series 300	Tensile	10,000 psi			998 psi		1572 psi
	Shear	6,700 psi				665 psi	
No. 2 Alloy Steel	Shear	13,800 psi	2547 psi	3523 psi			
Aluminum 6061-T6	Shear	6,030 psi					2174 psi

Table 1. Bolt Stress Analysis

NUREG 0612 EVALUATION
REACTOR VESSEL INSERVICE INSPECTION (ISI) POSITIONING SYSTEM
San Onofre Nuclear Generating Station, Units 2 and 3

FUNCTION

The Reactor Vessel ISI System is used to perform inservice inspections of the reactor vessel welds including the vertical and horizontal welds, the bottom hemisphere welds, and the inlet and outlet nozzle welds.

OPERATION

The Reactor Vessel ISI System is lifted by the containment polar crane using a lifting bail hung on the polar crane hook and is placed on the reactor vessel flange. The ISI System is supported on the reactor vessel top flange by three legs with mounting clamps used to position and lock the system in place on two reactor vessel guide studs. Lifting of the ISI system by the polar crane is performed in accordance with an approved station procedure which meets the requirements of NUREG-0612.

SAFETY CLASS

The Reactor Vessel ISI System is designated as a Safety Class 1 load because it weighs greater that 1500 lbs and must be lifted over fuel in an open reactor vessel.

DESCRIPTION

The PaR Model ISI-2 Inservice Inspection Positioning System weighs less than 4000 lbs. including all attachments and consists of the following major assemblies. (See Figure 1)

a) Three Support Legs - including clamps to engage reactor guide studs

b) Telescoping Tube Hoist

c) Inspection Booms

Telescoping Tube Hoist Assembly

The hoist assembly provides vertical travel and lateral constraint for the inspection booms. The assembly includes a set of vertical telescoping tubes, hoist drive system, position indicating system and means for attaching the inspection booms.

Components in contact with the pool water are fabricated from aluminum and stainless steel. Bearing materials are compatible with the pool water.

The telescoping tube assembly has five concentric tubes. The outer tube is stationary, and is attached to the tripod base support structure. The fixed tube also serves as a mounting frame for the hoist drive.

The hoist drive includes a DC motor, enclosed gearbox, redundant electric brakes, and dual grooved cable drum which provide redundant hoist cable reeving.

Rotary adjustable geared up and down limit switches are provided to limit tube travel. Slack cable limit switches are also provided which stop tube travel if one of the dual cable reeving systems goes slack.

Inspection

Via the drum housing cover, the hoist cables are inspected prior to use if they have not been inspected within the previous twelve months for signs of wear and replaced if required. When replacement is necessary, the hoist is traveled through its complete range. New cable is installed so that the same number of wraps is maintained and the slack limit switches reset.

SPECIAL LIFTING DEVICE: LIFTING BAIL (FIGURE 2)

The design stresses for the lifting bail and its attachment to the hoist drive housing are within the allowable stress for normal operating conditions. The allowable stress is 1/3 of the material yield strength or 1/5 of the average ultimate strength, whichever is lower.

MATERIALS

Lift Bail - - - - - - low carbon steel (LCS)

Hoist Housing - - - - 6061-T6 aluminum

Bolts - - - - - - - - alloy steel, SAE grade 5

Shoulder Bolts - - - alloy steel (UNBRAKO or equal)

NOTE: Materials were specified as listed above. Material certification is not available.

PROPERTIES AND ALLOWABLES

	LCS	6061	SAE 5	UNBRAKO
Tensile, ksi	63	42	120	140
Yield, ksi	35	35	100	120
F_t, ksi	11.6	8.4	24.0	28.0
F_b, ksi	11.6	8.4	24.0	28.0
F_v, ksi	8.1	5.9	16.8	19.6

* Shear taken as .7 times tensile

Testing

The lifting bail shall be tested prior to use if it has not been tested within the previous twelve months. At least one member of the nondestructive examination crew performing the examinations per references 1 and 2 below shall be a minimum of Level II in accordance with reference 3.

Test Requirements

1. All bolts shall be inspected utilizing the liquid penetrant (Reference 1) or magnetic particle (Reference 2) examination method.

2. Perform a 150% load test on the lifting bail (6000 ± 200 lbs.)

3. Visually inspect all bolts and welds for defects or permanent deformation.

4. Inspect bolts and welds per Reference 1 or 2.

5. Defective bolts shall be replaced. Defective welds may be repaired and shall be subjected to a repeat load test.

6. This load testing shall also be repeated prior to use following any major maintenance or alteration. Major maintenance or alteration is defined as a repair or design change in which load bearing members are subjected to heating above 300°F (150°C), removal of significant quantities of metal, welding or other surface repair or plastic deformation of metal.

References:

1. Liquid Penetrant Examination Procedure, OP-9.4, latest revision.

2. Magnetic Particle Examination Procedure, OP-9.2, latest revision.

3. Certification Program for Nondestructive Examination Personnel, NQAI 2.4, latest revision.

BOLTING

The load bearing components of the Reactor Vessel ISI System are the lifting bail, the upper hoist support housing, extension tubes, supporting legs and the inspection boom. The load bearing bolting materials for these components and their material properties are the following:

Material	Yield Strength (psi)	Ultimate Strength (psi)
Aluminum 6061-T6	40,000	45,000
Stainless Steel-Series 300	30,000	80,000
Alloy Steel-Grade 2		69,000

By analysis, the bolting stresses have been determined to be well below the maximum allowable stresses. The maximum allowable stresses for tension, compression and bending are considered to be 1/5 of the material ultimate strength or 1/3 of the material yield strength, whichever is lower. The maximum allowable shear stresses are 67% of the above and bearing stresses are 45% of the yield strength. (See Table 1)

CONCLUSION

The requirements of NUREG-0612 have been satisfied for lifting of the Reactor Vessel Weld Inservice Inspection Positioning System at San Onofre Units 2 and 3.

ISI-2 REACTOR INSPECTION TOOL

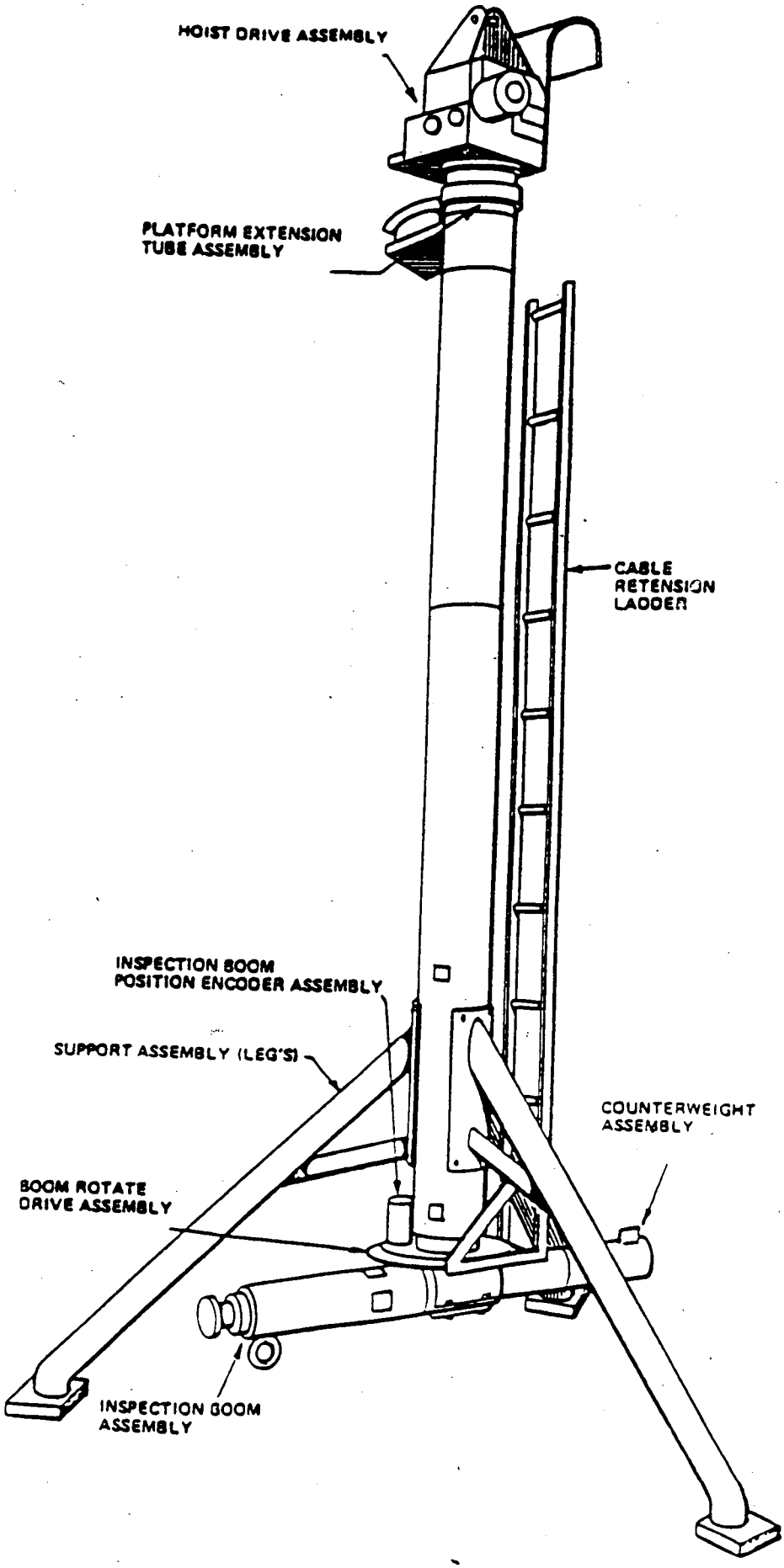

FIGURE 1

CHKD. BY GEO DATE 5-7-82

JOB NO. 3377

4.1 GENERAL ARRANGEMENT

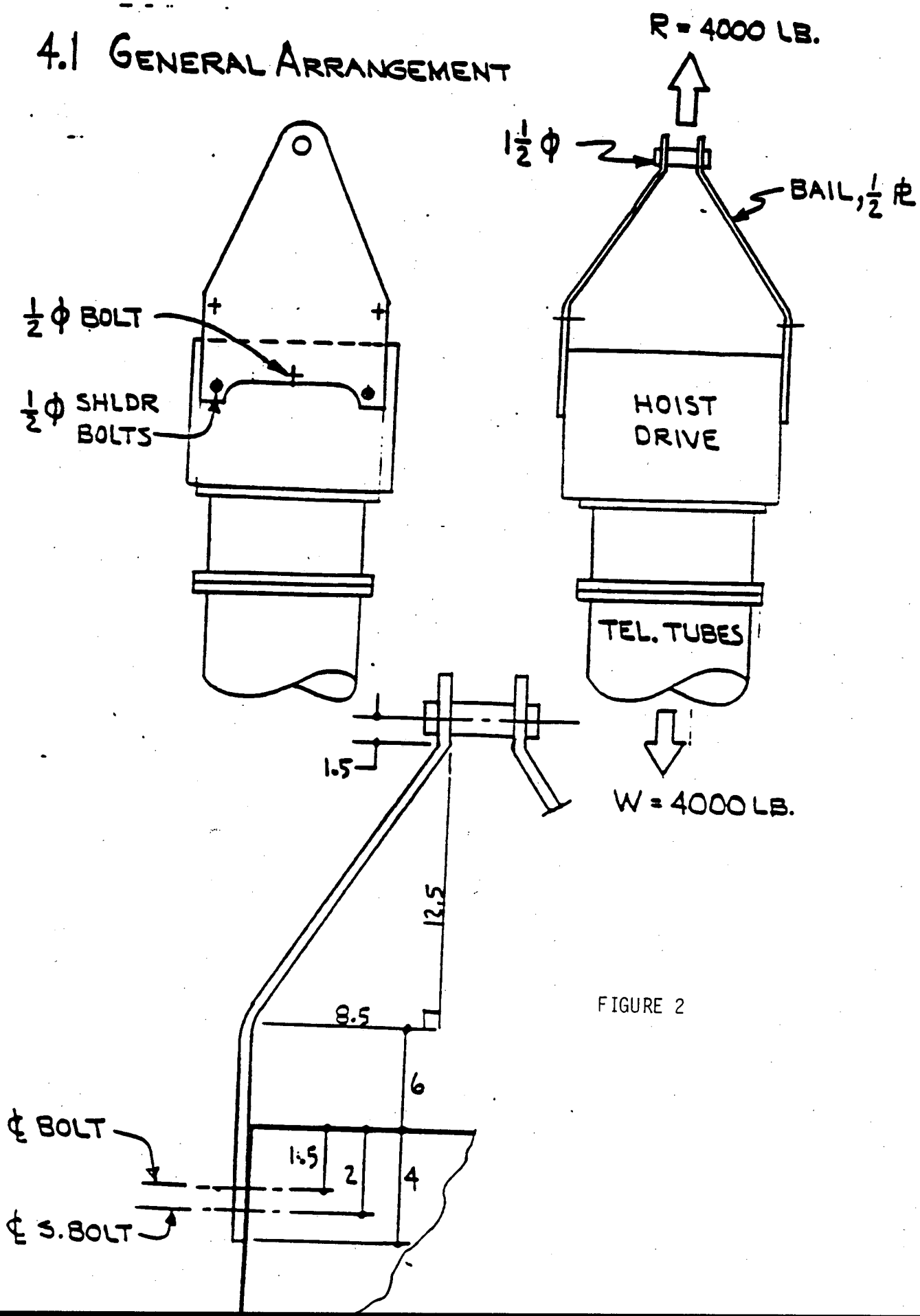

FIGURE 2

		Maximum Allowable Design Strength	BOLT STRESS ANALYSIS				
			1/2 x 13 NCSB Bail	1/2 x 13 NC Bail	3/4 x 10 NC Flange	3/4 x 10 NC Legs	1/2 x 20 NC Boom
Stainless Steel Series 300	Tensile	10,000 psi			998 psi		1572 psi
	Shear	6,700 psi				665 psi	
No. 2 Alloy Steel	Shear	13,800 psi	2547 psi	3523 psi			
Aluminum 6061-T6	Shear	6,030 psi					2174 psi

Table 1. Bolt Stress Analysis