Monte Carlo Modelling of Safkeg HS Container



To:	Croft Associates
Date:	August 2013
From:	AMEC
Your Reference:	
Our Reference:	AMEC/SF6652/001 Issue 2

Title	Monte Carlo Modelling of Safkeg HS Container
Prepared for	Croft Associates
Your Reference	
Our Reference	AMEC/SF6652/001 Issue 2
Confidentiality, copyright & reproduction	This report is submitted by Energy, Safety and Risk Consultants (UK) Limited (hereafter referred to as AMEC) in connection with a contract to supply goods and/or services and is submitted only on the basis of strict confidentiality. The contents must not be disclosed to third parties other than in accordance with the terms of the contract. To minimise our impact on the environment, AMEC uses paper from sustainable sources
Contact Details	AMEC Kimmeridge House Dorset Green Technology Park Winfrith Newburgh Dorchester Dorset DT2 8ZB United Kingdom T +44 (0) 1305 851147 F +44 (0) 1305 851105 E pat.cowan@amec.com http://www.amec.com

	Name	Signature	Date
Author(s)	David Picton	pp. T. Hanlon	22.08.13
Reviewed by	Chris Bazell		22/08/13
Approved by	Pat Cowan	pp. RMMason	22/08/13

Transport Flask Photograph courtesy of Magnox Electric Ltd
Submarine Photograph by: Mez Merrill; © Crown Copyright/MOD, image from www.photos.mod.uk. Reproduced with the permission of the Controller of Her Majesty's Stationery Office

Executive Summary

The following gamma radiation calculations have been carried out for the Croft Safkeg HS container:

- Maximum gamma dose-rates and dose-rate profiles on the top, side and bottom surfaces of the Safkeg HS container.
- Maximum gamma dose-rates and dose-rate profiles at a distance of 1m from the top, side and bottom of the Safkeg HS container.
- Maximum gamma dose-rates at specified o-ring locations on the inner containment vessel lid and at specified locations on the lid up-stands.

These calculations were carried out for the following source configurations:

- ^{137}Cs point source located at; top centred, top eccentred, bottom centred and mid-height eccentred positions within the inner containment vessel (without a tungsten insert).
- ^{137}Cs point source in the cavity of a tungsten insert fitted into the inner containment vessel, with the source located separately at; top centred, top eccentred, bottom centred and mid-height eccentred locations. Two different tungsten inserts have been modelled.

Issue 2 of this report presents an updated assessment for sources in the tungsten inserts. The models containing HS-31x114-Tu and HS-12x95-Tu inserts have been updated and an additional source location, eccentred at the top of the cavity, has been added. The assessment for sources inside the HS container has not been updated, but some corrections have been made to the results presented in the tables.

Contents

Tables

Figures

1 Introduction

Calculations have been carried out to determine the maximum gamma dose-rates and dose-rate profiles at the top, side and bottom of the Croft Safkeg HS container on contact and at a distance of 1m from the container. Maximum dose-rates at the inner o-ring and trapezoidal lid up-stand locations, on the inner containment vessel lid, were also calculated.

The dose-rates were determined for a solid point source (^{137}Cs) located at different positions within the containment vessel - both with and without a tungsten insert.

The Scope of Work was defined by the customer [1], [2].

The assessment was carried out using the Monte Carlo radiation transport code MCBEND [3,4], which has been extensively used for similar assessments in the past.

Issue 2 of this report presents an updated assessment for sources in the tungsten inserts. The tungsten insert models have been updated to reflect changes in design; in particular, the cavity diameter in the HS-31x114-Tu and HS-12x95-Tu inserts has been revised to 31mm and 12mm respectively and the corresponding base heights have been changed to 17.5mm and 27mm. An additional source location, eccentred at the top of the cavity, has been added. For pessimism, the insert was raised to the top of the HS cavity in top source calculations.

The assessment for cases with no tungsten insert has not been updated, but some corrections and additions have been made to the results presented in the tables:

- Table 4 has been corrected to report that the maximum dose rate from a mid-height eccentred source occurs in the azimuthal interval opposite the source. Table 9, Table 10, Figure 6 and Figure 7 have been amended to show the axial dose rate profiles in this azimuthal interval.
- In order to report the overall maximum, Table 4 now includes the maximum side dose rates from a top centred source.

2 Description of the Problem

The Safkeg HS container consists of an outer container and an inner containment vessel. The outer container consists of an outer stainless steel casing with a nominal outer diameter of 382.5 mm and a maximum height of 585 mm. It has an inner stainless steel casing of inner diameter 250 mm and internal height 370.5 mm that houses the inner containment vessel. The walls of the outer and inner casings are 2 mm thick, the base of the outer casing is nominally 4 mm thick and the base of the inner casing is 6 mm thick. A single 6 mm thick lid covers both inner and outer casing. The spaces between the outer and inner casings and the inner containment vessel are packed with cork.

The inner containment vessel consists of a body and a lid. The containment vessel body is a double-walled stainless steel cylinder, which is closed at the bottom and open at the top, with a tapered and stepped profile, equipped with a flange to accept a lid. The containment vessel body has overall approximate dimensions: height 272.35 mm, outer diameter 179.5 mm, inner diameter 65.8 mm. The flange outer diameter is 200 mm. The body is filled with depleted uranium between the inner and outer walls to an approximate thickness of 47.65 mm. The lid is of stainless steel construction and is stepped, with an inner depleted uranium-filled cavity that fits into the top of the containment vessel body. The lid dimensions are: diameter 200 mm and height 88.75 mm. The lid is a tolerance fit into the stepped body and is secured by M10 bolts. A double o-ring seal between the lid and body flange provide a positive seal when the lid bolts are tightened.

The inner cavity of the containment vessel is designed to accept a removable insert in the form of a cylindrical tungsten source holder with its own o-ring sealed tungsten lid and stainless steel magnetic cap. Two different tungsten inserts are considered in this study – HS-31x114-Tu and HS-12x95-Tu.

The general assembly and detailed construction of the inner containment vessel, the complete Safkeg HS transport container and the two tungsten inserts were provided by the customer in a set of dimensioned engineering drawings [5] from which all geometry for the MCBEND model was derived. The material of the tungsten inserts was specified in an email [6]

The Safkeg HS container can carry both solid and liquid gamma sources, but only solid sources are considered here. The problem is to determine the (maximum) contact and 1m dose-rates and certain other specified positions for the Safkeg HS transport container for a ^{137}Cs source under both normal and accident conditions.

3 MCBEND Calculations

The calculations for configurations without tungsten inserts were carried out using MCBEND version 10A_RU1 [3]. The updated calculations for sources in tungsten inserts were carried out using the latest version, 11A_RU0 [4]. The code and data are maintained to a level of quality assurance consistent with the standards of the ANSWERS Software Service of AMEC (formerly Serco). This ensures that reference versions of the code, data libraries and test data are held, and that updating and archiving of the code and data are strictly controlled.

3.1 MCBEND Geometry Modelling

3D models of the Safkeg HS container and its component parts were set up in MCBEND using the dimensioned drawings and material information provided by the customer [5] [6] [7] . All MCBEND geometry models were checked using the geometry-checking programs VISAGE [8] or Visual Workshop [9]. The material compositions used in the models are listed in Table 1. The following assumptions and simplifications were made in specifying the model:

- Small chamfers and rounding at corners are ignored, except in the vicinity of the containment vessel o-rings
- Nuts and bolts are omitted, but the central hole at the top of the containment vessel is included
- Very small (< 0.1 mm) air-gaps and voids are ignored, except for the regions where the containment vessel lid interfaces to the vessel body – in these regions the tolerance gaps are modelled explicitly
- Cork is omitted for conservatism and modelled as void instead
- O-ring material is not modelled and is treated as void
- The 20x20 mm square cross-section tubing at either end of the Safkeg HS container has no significant impact on the calculations and is not modelled

Radial and axial slices through the models, without and with a tungsten insert, are shown in Figure 1 and Figure 2 respectively. Note that the cutouts at the top and bottom of the tungsten inserts were modelled. The tungsten inserts were positioned at the bottom of the HS cavity (as shown) in cases with the source at the bottom or mid-height of the insert cavity, but were raised to the top of the HS cavity in top source cases.. The global origin of the model is located at the intersection of the cylindrical axis of the container and the plane closing its bottom end – as shown on Figure 1. A right-handed cylindrical coordinate system is used. Note that the z-reference plane at mid-cavity height (no tungsten insert) marked on Figure 1, is fixed at 28.045 cm above the global origin and is used as an alternative reference for the presentation of axial dose-rates.

3.2 Sources

A ^{137}Cs source was used in the MCBEND calculations. The significant gamma emission line for this source is taken from Reference [10] and is shown in Table 2.

For pessimism the ^{137}Cs source was modelled in MCBEND as a point source. No source housing was modelled. Calculations were done for the source located at several positions inside the containment vessel cavity, both with and without a tungsten insert. These positions were chosen as worst case positions for top, bottom and side dose-rates. The top eccentred position (no tungsten insert) was chosen as a worst case position for lid streaming and o-ring dose-rates. In this case the source was located axially so that it was on the centre-line of the clearance gap between the containment vessel body and lid. The different locations are marked as small yellow circles on Figure 1 and Figure 2. Note that the mid-height positions, in each case, are for the respective cavity heights with lids fitted.

The source configurations with a point ^{137}Cs source are summarised in Table 3. These cover normal conditions and worst case accident conditions with a solid source. In all cases the source activity was 3kCi.

Beta emission was not modelled – it will not contribute significantly to the total dose-rates and would have required a separate set of calculations in MCBEND.

3.3 Scoring

Maximum gamma dose-rates and dose-rate profiles are required at the top, side and bottom of the Safkeg HS container on contact and at a distance of 1m from the container. Maximum dose-rates at the inner o-ring and trapezoidal lid up-stand locations, on the inner containment vessel lid, were also scored. Results for the trapezoidal up-stands and inner o-ring are reported only for the cases with no tungsten inserts.

Contact scoring regions were defined on the top surface, bottom surface and outer cylindrical surface of the Safkeg HS container. The top scoring was divided into a central disc of radius 5cm and three annuli with outer radii 10 cm, 15 cm and 18.925 cm respectively. These were sub-divided azimuthally into twelve sectors of 30° offset from $\theta = 0°$ by 15° - except for the central disc for which the twelve sectors were merged. The bottom scoring regions were defined similarly except that there is no azimuthal sub-division. The side contact scoring regions were defined as a set of ten axial divisions of 5.0 cm height extending from the bottom to the top of the outer casing. These were further sub-divided into twelve azimuthal divisions of 30°, offset from $\theta = 0°$ by 15°.

Scoring regions at a distance of 1m from the top, bottom and side surfaces were defined analogously; however in this case there were ten axial divisions each 25cm high, except for the bottom and top divisions which were 27.9 cm and 18.2 cm respectively.

Scoring regions were defined on the inner containment vessel lid at the inner o-ring location and the tops of the trapezoidal up-stands. The o-ring scoring was divided into eighteen azimuthal sectors each of 20°, offset from $\theta = 0°$ by 10°. The up-stands scoring was divided into twelve azimuthal sectors each of 30°, offset from $\theta = 0°$ by 15°.

This arrangement of scoring regions allows dose-rate profiles and maximum dose-rates to be determined with a reasonable compromise between the requirements of adequate spatial resolution and statistics.

3.4 Calculations

Separate MCBEND calculations were performed for each of the ^{137}Cs source configurations (as given in Table 3) to determine the maximum gamma dose-rates and dose-rate profiles at the top, side, bottom, o-ring and up-stand scoring regions, both with and without a tungsten insert in the inner containment vessel.

The gamma dose-rate response function in the cases without tungsten inserts was taken from ICRP 74 [11]. The ANSI/ ANS-6.1.1 1977 dose conversion function was used for the tungsten insert results. Results for both response functions are given in units of $\mu Sv.hr^{-1}$.

MCBEND calculations were run for sufficient time to achieve reasonable statistics in the scoring regions of most interest - typically the standard deviation was less than a few %.

4 Results

The maximum contact and 1m dose-rates were extracted from the MCBEND results for each of the source locations. These are summarised in Table 4 for the container without the tungsten insert in the containment vessel, and in Table 5 and Table 6 for the container with the tungsten inserts in the containment vessel. Note, that where there is azimuthally divided scoring, the figures quoted in Table 4 are always the highest values recorded, even where symmetry would justify quoting a weighted mean over all the relevant scoring regions. The highest contact dose-rate is 6.61 x 10^5 $\mu Sv.hr^{-1}$ and occurs on the side surface of the Safkeg HS container when the source is eccentred at the top of the inner containment vessel lined up with the air gap, without the tungsten insert in place.

The calculated dose-rate profiles for the top, side and bottom contact scoring regions and at a distance of 1m from the container are presented in Table 7 - Table 10 and plotted in Figure 3 - Figure 7. Where the model is fully axi-symmetric (including the source location) the values given in the detailed dose-rate profile tables are averaged, where relevant, over all azimuthal regions. Where the model is not axi-symmetric the radial and axial profiles are given in the azimuthal mesh containing the maximum dose.

5 References

1 Email from Bob Vaughan (Croft Ltd) to Pat Cowan (Serco) “SAFKEG HS – Shielding Calculations” 26/10/09.

2 Email from Bob Vaughan (Croft Ltd) to Pat Cowan (Serco) “Re: SAFKEG HS – Shielding Calculations” 15/11/09.

3 "MCBEND - A Monte Carlo Program for General Radiation Transport Solutions. User Guide for Version 10". ANSWERS/MCBEND/REPORT/004.

4 "MCBEND - A Monte Carlo Program for General Radiation Transport Solutions. User Guide for Version 11". ANSWERS/MCBEND/REPORT/008.

5 Croft Safkeg HS Drawings as follows:

0C-5949, Issue A Safkeg HS Construction [included at the end of this report]

1C-5999, Issue A Containment Vessel HS Body Construction [included at the end of this report]

1C-5997, Issue A Containment Vessel HS Lid Construction [included at the end of this report]

3C-6851, Issue A, HS-31x114-Tu Insert Design No. 3985 (Construction), Issue A dated 13/3/13 [included at the end of this report]

3C-7010, Issue P3 HS-Tu Magnetic Cap, Design No. 3985

3C-6850, HS-12x95-Tu Insert Design No. 3982, HS-12x95-Tu Insert Design No. 3982 (Construction), Issue A dated 13/3/13 [included at the end of this report]

3C-7007, Issue P5 HS-Tu Magnetic Cap, Design No. 3982

6 Email from Tim Froud (Croft Ltd) to Pat Cowan (Serco) “RE: Croft hs tungsten inserts” 03/12/09.

7 Croft drawing i1621b – “Containment Vessel HS (with all dimensions eccentric)”

8 "VISAGE - A Program for the Graphical Validation of MONK, MCBEND and RANKERN Geometry Models. User Guide for Version 5A". ANSWERS/VISAGE/REPORT/002.

9 “Visual Workshop. The ANSWERS product to prepare and verify models, launch jobs and visualise results for MONK, MCBEND, RANKERN, and WIMS. User Guide for Version 2A”, ANSWERS/VISUALWORKSHOP/REPORT/003, September 2011

10 The Radiochemical Manual 1998, AEA Technology

11 ICRP Publication 74, “Conversion Coefficients for use in Radiological Protection against External Radiation”, Annals of the ICRP 26 3/4, 1996

6 Tables

Table 1: Specification of materials used in the MCBEND model

Material	**Density** g/cm^3	**Elemental Composition**	**Mass fraction**
Stainless Steel (Safkeg walls)	8.027	Cr Mn Fe Ni	0.19 0.02 0.6975 0.0925
Depleted Uranium (vessel shielding)	18.65	U Mo	0.98 0.02
Tungsten (for insert)	18	W Fe Ni	0.95 0.015 0.035
Stainless Steel 430 (magnetic cap)	7.75	C Cr Mn Si Fe	0.0012 0.17 0.01 0.01 0.8088

Table 2: Summary of gamma line energies and intensities used in MCBEND model

Cs-137 source:	
Line Energy (MeV) Line Intensity	0.662 0.852

Table 3: Summary of source configurations used in MCBEND model

Source	Form	Activity	Container configuration	Source location
Cs-137	solid/point	3000 Ci	without tungsten insert	top, centred
				bottom, centred
				mid-cavity, eccentred
				top, eccentred
			with tungsten inserts HS-31x114-Tu HS-12x95-Tu	top, centred
				bottom, centred
				mid-cavity, eccentred
				top, eccentred

Table 4: Calculated maximum dose-rates for ^{137}Cs source in Safkeg HS Container - without tungsten insert in containment vessel

3kCi point ^{137}Cs Source
Dose-Rates in µSv/hr

Source - Eccentred near top, lined up with air gaps
Maximum dose-rate is at same azimuthal region as source

Side - Surface 6.61E+05	**sd%** 0.4	**Side - 1m** 1.21E+04	**sd%** 0.6
Top - Surface 6.95E+04	**sd%** 1.7	**Top - 1m** 1.25E+03	**sd%** 2.4
O Ring 2.89E+06	**sd%** 1.4		
Trapezoidal upstand 1.84E+05	**sd%** 1.8		

Source - Centred at top of cavity

Side - Surface 2.49E+05	**sd%** 0.2	**Side - 1m** 7.17E+03	**sd%** 0.2
Top - Surface 9.75E+03	**sd%** 2.6	**Top - 1m** 2.52E+02	**sd%** 2.9

Source - Centred at bottom of cavity

Bottom - Surface 1.45E+04	**sd%** 2.4	**Bottom - 1m** 1.96E+02	**sd%** 4.0

Source - Eccentred at side of cavity at mid-height
Maximum dose-rate is at opposite azimuthal region to source

Side - Surface 1.38E+04	**sd%** 3.4	**Side - 1m** 2.47E+02	**sd%** 3.8

Table 5: Calculated maximum dose-rates for ^{137}Cs source in Safkeg HS Container - with tungsten insert HS-31x114-Tu in containment vessel

3kCi point 137Cs Source
Dose-Rates in µSv/hr

Source - Eccentred at top of cavity

Side - Surface 3.06E+03	**sd%** 0.1	**Side - 1m** 5.11E+01	**sd%** 0.1
Top - Surface 1.54E+03	**sd%** 0.1	**Top - 1m** 3.11E+01	**sd%** 0.1

Source - Centred at top of cavity

Side - Surface 5.21E+02	**sd%** 0.2	**Side - 1m** 1.33E+01	**sd%** 0.2
Top - Surface 2.83E+02	**sd%** 0.4	**Top - 1m** 6.67E+00	**sd%** 0.6

Source - Centred at bottom of cavity

Bottom - Surface 8.17E+02	**sd%** 0.2	**Bottom - 1m** 1.27E+01	**sd%** 0.2

Source - Eccentred at side of cavity at mid-height
Maximum dose-rate is at same azimuthal region as source

Side - Surface 7.49E+02	**sd%** 0.1	**Side - 1m** 1.55E+01	**sd%** 0.2

Table 6: Calculated maximum dose-rates for ^{137}Cs source in Safkeg HS Container - with tungsten insert HS-12x95-Tu in containment vessel

3kCi point Cs137 Source
Dose-Rates in µSv/hr

Source - Eccentred at top of cavity

Side - Surface 2.84E+02	**sd%** 0.2	**Side - 1m** 5.83E+00	**sd%** 0.2
Top - Surface 1.66E+02	**sd%** 0.3	**Top - 1m** 3.76E+00	**sd%** 0.4

Source - Centred at top of cavity

Side - Surface 1.34E+02	**sd%** 0.3	**Side - 1m** 3.46E+00	**sd%** 0.3
Top - Surface 9.34E+01	**sd%** 0.5	**Top - 1m** 2.62E+00	**sd%** 0.6

Source - Centred at bottom of cavity

Note that the maximum dose rate at 1m occurs at the side

Bottom - Surface 1.66E+02	**sd%** 0.2	**Bottom - 1m** 2.75E+00	**sd%** 0.3
Side - Surface 1.28E+02	**sd%** 0.2	**Side - 1m** 2.91E+00	**sd%** 0.3

Source - Eccentred at side of cavity at mid-height
Maximum dose-rate is at same azimuthal region as source

Side - Surface 1.57E+02	**sd%** 0.2	**Side - 1m** 3.48E+00	**sd%** 0.2

Table 7: Calculated top and bottom radial dose-rate profiles at contact and 1m for ^{137}Cs source

Dose-Rates in µSv/hr

Source - Centred at bottom of cavity

Contact dose-rates at bottom						
mean radial position (cm)	No insert		With insert HS-31x114-Tu		With insert HS-12x95-Tu	
	gamma dose	SD (%)	gamma dose	SD (%)	gamma dose	SD (%)
2.5	1.45E+04	2.4	8.17E+02	0.2	1.66E+02	0.2
7.5	4.31E+03	2.7	2.70E+02	0.1	5.67E+01	0.2
12.5	8.96E+02	5.5	5.88E+01	0.2	1.43E+01	0.3
16.9625	4.52E+02	6.7	3.16E+01	0.4	9.43E+00	0.4

1m dose-rates at bottom						
mean radial position (cm)	No insert		With insert HS-31x114-Tu		With insert HS-12x95-Tu	
	gamma dose	SD (%)	gamma dose	SD (%)	gamma dose	SD (%)
12.5	1.96E+02	4.0	1.27E+01	0.2	2.75E+00	0.3
37.5	1.24E+02	3.0	7.54E+00	0.2	1.61E+00	0.2
62.5	5.65E+01	3.4	3.25E+00	0.2	6.99E-01	0.2
87.5	2.35E+01	4.4	1.48E+00	0.3	3.49E-01	0.3
109.5625	1.36E+01	6.0	9.61E-01	0.5	2.62E-01	0.6

Source - Centred at top of cavity

Contact dose-rates at top						
mean radial position (cm)	No insert		With insert HS-31x114-Tu		With insert HS-12x95-Tu	
	gamma dose	SD (%)	gamma dose	SD (%)	gamma dose	SD (%)
2.5	9.75E+03	2.6	2.83E+02	0.4	9.34E+01	0.5
7.5	6.95E+03	1.8	1.85E+02	0.5	7.61E+01	0.5
12.5	4.54E+03	1.7	1.14E+02	0.7	6.34E+01	0.4
16.9625	4.08E+03	1.7	8.93E+01	0.5	5.15E+01	0.3

1m dose-rates at top						
mean radial position (cm)	No insert		With insert HS-31x114-Tu		With insert HS-12x95-Tu	
	gamma dose	SD (%)	gamma dose	SD (%)	gamma dose	SD (%)
12.5	2.52E+02	2.9	6.67E+00	0.6	2.62E+00	0.6
37.5	2.22E+02	1.8	5.26E+00	0.5	2.29E+00	0.5
62.5	1.73E+02	1.6	3.35E+00	0.5	1.61E+00	0.4
87.5	1.53E+02	1.5	2.31E+00	0.5	1.16E+00	0.7
109.5625	1.69E+02	1.6	2.17E+00	0.4	1.13E+00	0.3

Table 8: Calculated top radial dose-rate profiles at contact and 1m for ^{137}Cs source (through point of maximum dose)

Dose-Rates in µSv/hr

Source - Eccentred at cavity top (lined up with air gaps in cases with no insert)

Contact dose-rates at top						
mean radial position (cm)	No insert		With insert HS-31x114-Tu		With insert HS-12x95-Tu	
	gamma dose	SD (%)	gamma dose	SD (%)	gamma dose	SD (%)
2.5	2.18E+04	1.7	6.33E+02	0.2	1.10E+02	0.3
7.5	4.98E+04	2.2	1.28E+03	0.2	1.55E+02	0.3
12.5	6.85E+04	1.6	1.54E+03	0.1	1.66E+02	0.3
16.9625	6.95E+04	1.7	1.53E+03	0.1	1.55E+02	0.3

1m dose-rates at top						
mean radial position (cm)	No insert		With insert HS-31x114-Tu		With insert HS-12x95-Tu	
	gamma dose	SD (%)	gamma dose	SD (%)	gamma dose	SD (%)
12.5	7.17E+02	1.8	1.92E+01	0.2	3.23E+00	0.3
37.5	1.09E+03	3.0	2.75E+01	0.3	3.76E+00	0.4
62.5	9.87E+02	2.7	2.30E+01	0.2	2.95E+00	0.3
87.5	1.01E+03	2.5	2.17E+01	0.1	2.47E+00	0.3
109.5625	1.25E+03	2.4	3.11E+01	0.1	3.50E+00	0.3

Table 9: Calculated side axial dose-rate profiles on contact for ^{137}Cs source (in same azimuthal interval as the source)

Dose-Rates in µSv/hr

Side contact dose-rate profiles						
axial distance above mid-height of cavity with no insert (cm)	source eccentred @ cavity mid-height					
	No insert		Insert HS-31x114-Tu		Insert HS-12x95-Tu	
	gamma dose	SD (%)	gamma dose	SD (%)	gamma dose	SD (%)
-18.345	5.81E+02	14.7	1.99E+01	0.5	4.39E+00	0.5
-13.345	1.40E+03	10.1	6.50E+01	0.3	1.44E+01	0.3
-8.345	3.31E+03	6.4	2.67E+02	0.2	5.68E+01	0.2
-3.345	5.80E+03	4.7	6.90E+02	0.1	1.44E+02	0.2
1.655	7.43E+03	4.0	7.49E+02	0.1	1.57E+02	0.2
6.655	6.27E+03	4.2	3.30E+02	0.2	7.04E+01	0.2
11.655	6.64E+03	3.9	8.38E+01	0.3	1.84E+01	0.3
16.655	9.02E+03	3.5	2.34E+01	0.4	5.33E+00	0.5
21.655	1.38E+04	3.4	1.08E+01	0.7	2.33E+00	0.7
26.655	1.03E+04	4.1	5.87E+00	1.1	1.22E+00	1.3
	source eccentred @ cavity top					
	No insert		Insert HS-31x114-Tu		Insert HS-12x95-Tu	
	gamma dose	SD (%)	gamma dose	SD (%)	gamma dose	SD (%)
-18.345	2.42E+03	8.9	2.10E+01	0.5	3.24E+00	0.8
-13.345	4.60E+03	5.9	4.00E+01	0.4	6.52E+00	0.5
-8.345	9.97E+03	3.8	9.64E+01	0.2	1.84E+01	0.4
-3.345	3.05E+04	2.1	3.05E+02	0.2	6.48E+01	0.3
1.655	1.30E+05	1.0	8.76E+02	0.1	1.67E+02	0.2
6.655	6.61E+05	0.4	1.65E+03	0.1	2.30E+02	0.2
11.655	2.96E+05	0.6	2.50E+03	0.1	2.37E+02	0.2
16.655	8.42E+04	1.2	3.06E+03	0.1	2.71E+02	0.2
21.655	6.26E+04	1.5	2.67E+03	0.1	2.84E+02	0.2
26.655	2.44E+04	2.6	1.27E+03	0.1	1.31E+02	0.3

Table 10: Calculated side axial dose-rate profiles at 1m for ^{137}Cs source (in same azimuthal interval as the source)

Dose-Rates in µSv/hr

Side 1m dose-rate profiles						
axial distance above mid-height of cavity with no insert (cm)	source eccentred @ cavity mid-height					
	No insert		Insert HS-31x114-Tu		Insert HS-12x95-Tu	
	gamma dose	SD (%)	gamma dose	SD (%)	gamma dose	SD (%)
-112.145	2.45E+01	14.3	8.26E-01	0.6	1.85E-01	0.6
-90.545	3.36E+01	10.6	1.48E+00	0.3	3.28E-01	0.4
-65.545	7.24E+01	7.0	3.53E+00	0.3	7.61E-01	0.3
-40.545	1.32E+02	5.3	8.39E+00	0.2	1.84E+00	0.2
-15.545	2.11E+02	4.2	1.46E+01	0.2	3.27E+00	0.2
9.455	2.47E+02	3.8	1.55E+01	0.2	3.48E+00	0.2
34.455	2.27E+02	4.0	9.72E+00	0.2	2.16E+00	0.2
59.455	1.91E+02	4.4	4.26E+00	0.2	9.26E-01	0.3
84.455	1.72E+02	4.9	1.78E+00	0.3	3.87E-01	0.4
110.905	2.24E+02	4.5	8.71E-01	0.5	1.89E-01	0.5
	source eccentred @ cavity top					
	No insert		Insert HS-31x114-Tu		Insert HS-12x95-Tu	
	gamma dose	SD (%)	gamma dose	SD (%)	gamma dose	SD (%)
-112.145	2.86E+02	4.3	2.80E+00	0.3	3.80E-01	0.6
-90.545	4.80E+02	2.8	4.34E+00	0.2	5.99E-01	0.4
-65.545	9.00E+02	2.0	7.89E+00	0.2	1.15E+00	0.3
-40.545	2.02E+03	1.4	1.54E+01	0.1	2.40E+00	0.2
-15.545	7.22E+03	0.7	2.79E+01	0.1	4.43E+00	0.2
9.455	1.21E+04	0.6	4.00E+01	0.1	5.83E+00	0.2
34.455	4.77E+03	0.9	4.45E+01	0.1	5.49E+00	0.2
59.455	1.93E+03	1.4	5.11E+01	0.1	4.71E+00	0.2
84.455	1.32E+03	1.8	4.78E+01	0.1	4.81E+00	0.2
110.905	1.05E+03	2.0	4.47E+01	0.1	5.17E+00	0.2

7 Figures

Figure 1: Slices through MCBEND model for Safkeg HS container without tungsten insert

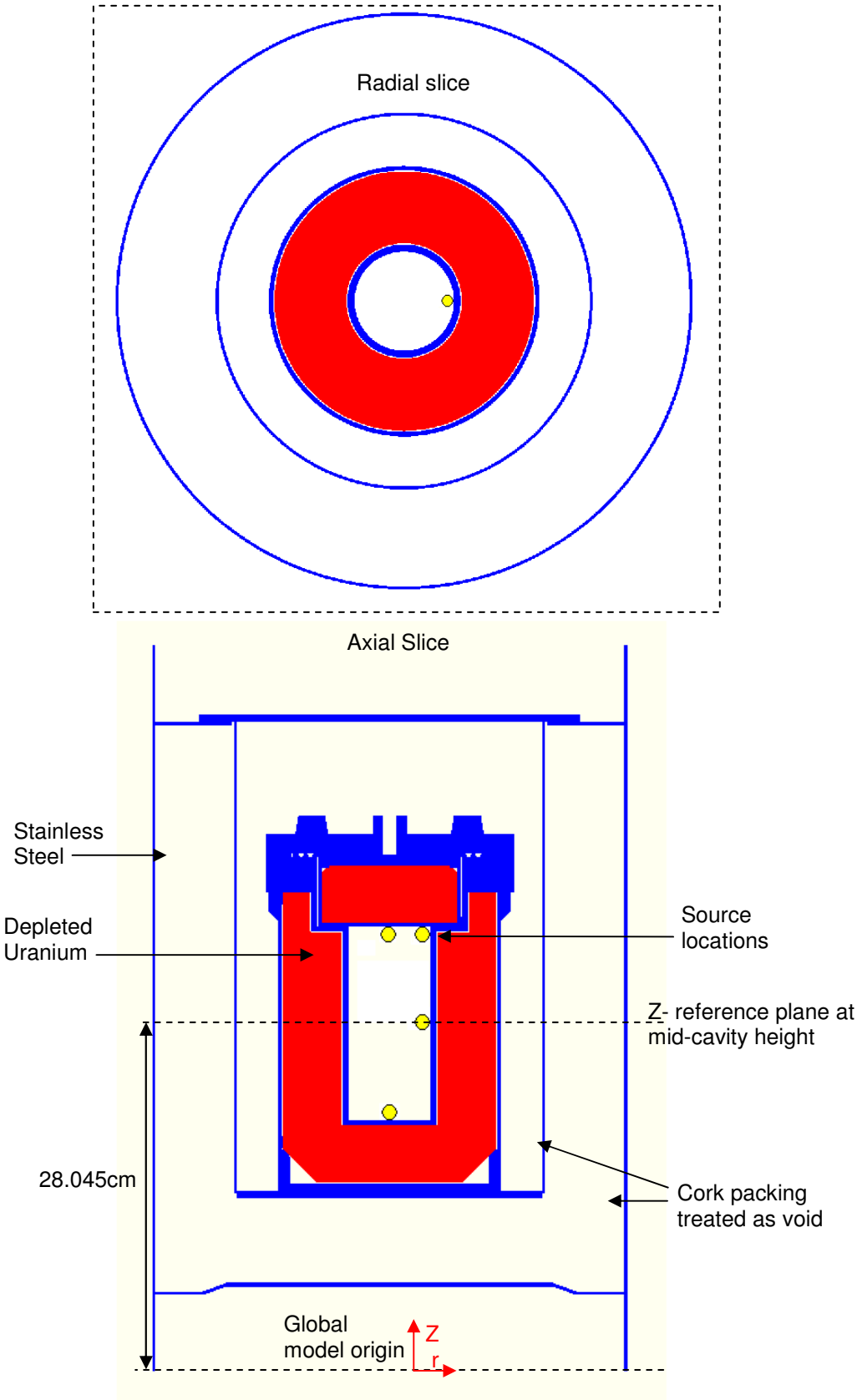

Figure 2: Slices through MCBEND model for Safkeg HS container with tungsten insert

Note that the tungsten insert is raised to the top of the HS cavity in top source cases. In other cases the insert is in the position shown.

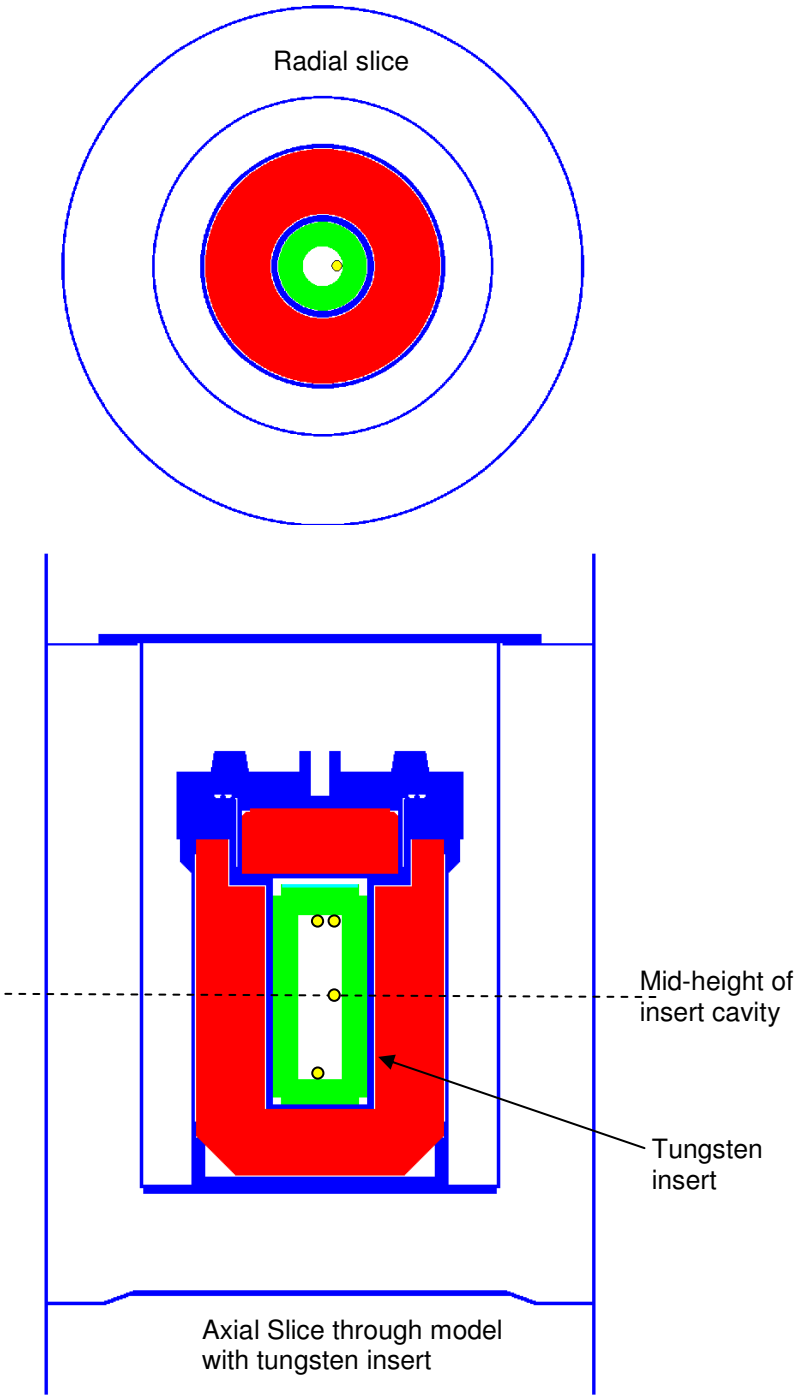

Figure 3: Radial dose-rate profiles at bottom surface and 1m for ^{137}Cs source

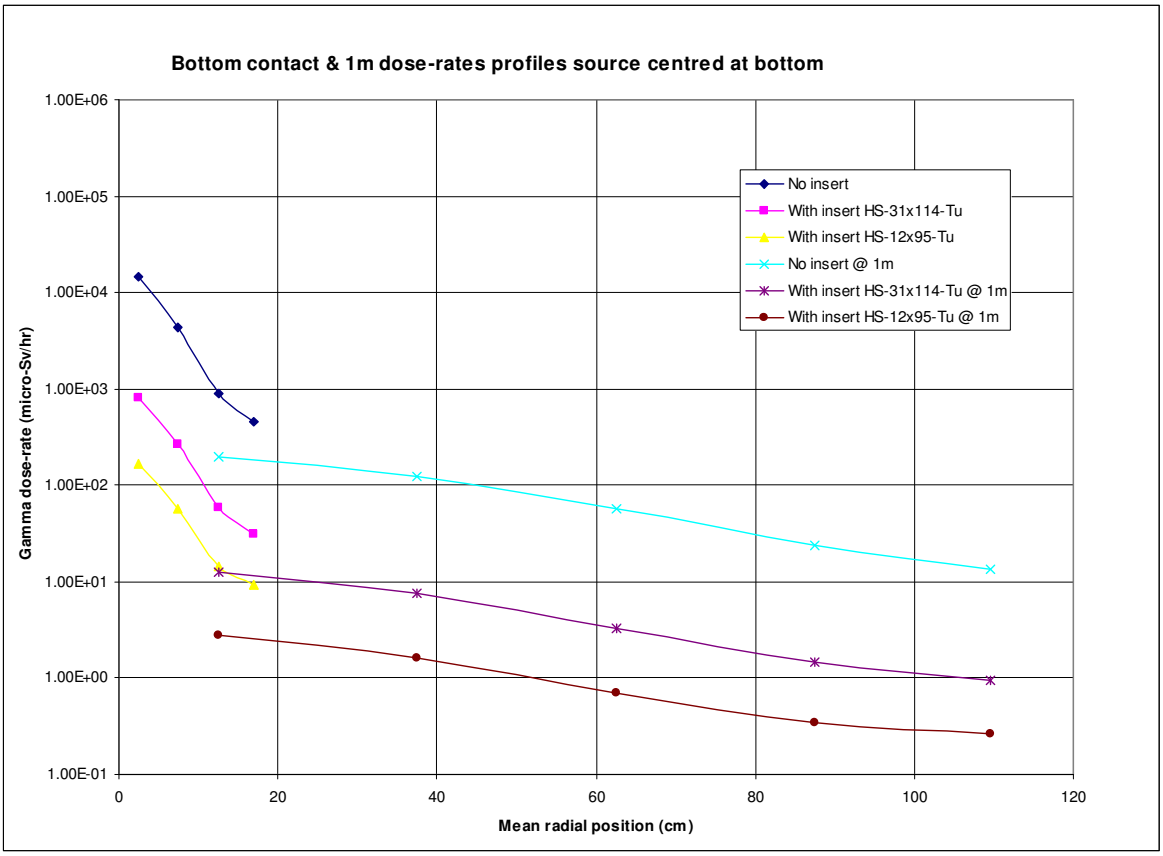

Figure 4: Radial dose-rate profiles at top surface and 1m for centred ^{137}Cs source

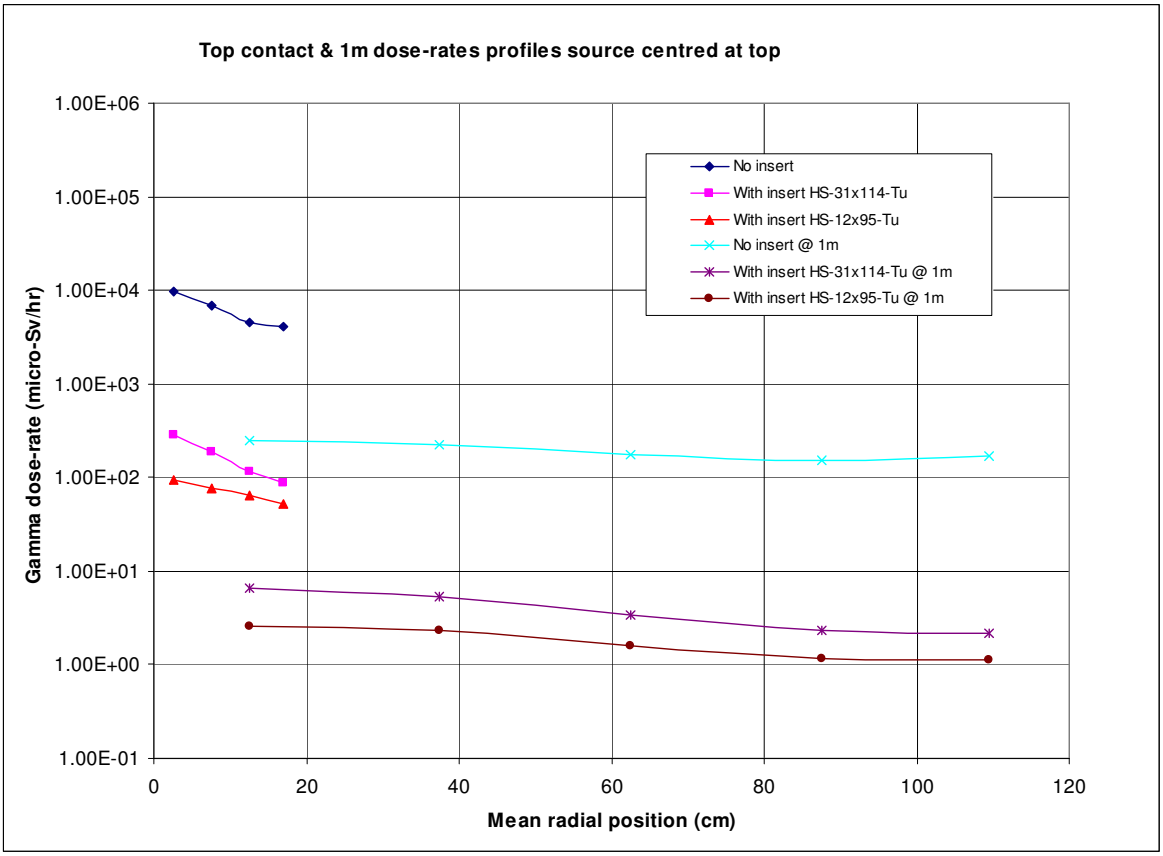

Figure 5: Radial dose-rate profiles at top surface and 1m for eccentred ^{137}Cs source

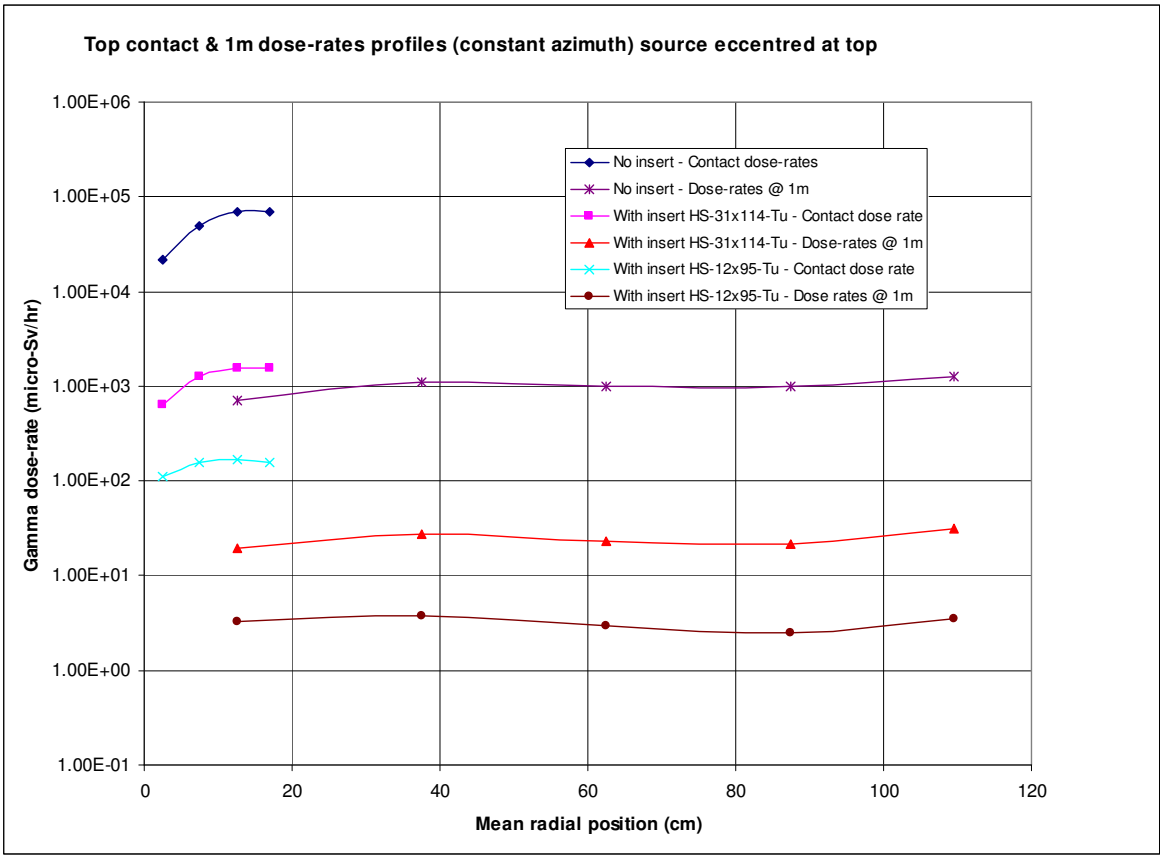

Figure 6: Axial dose-rate profiles at side surface for ^{137}Cs source

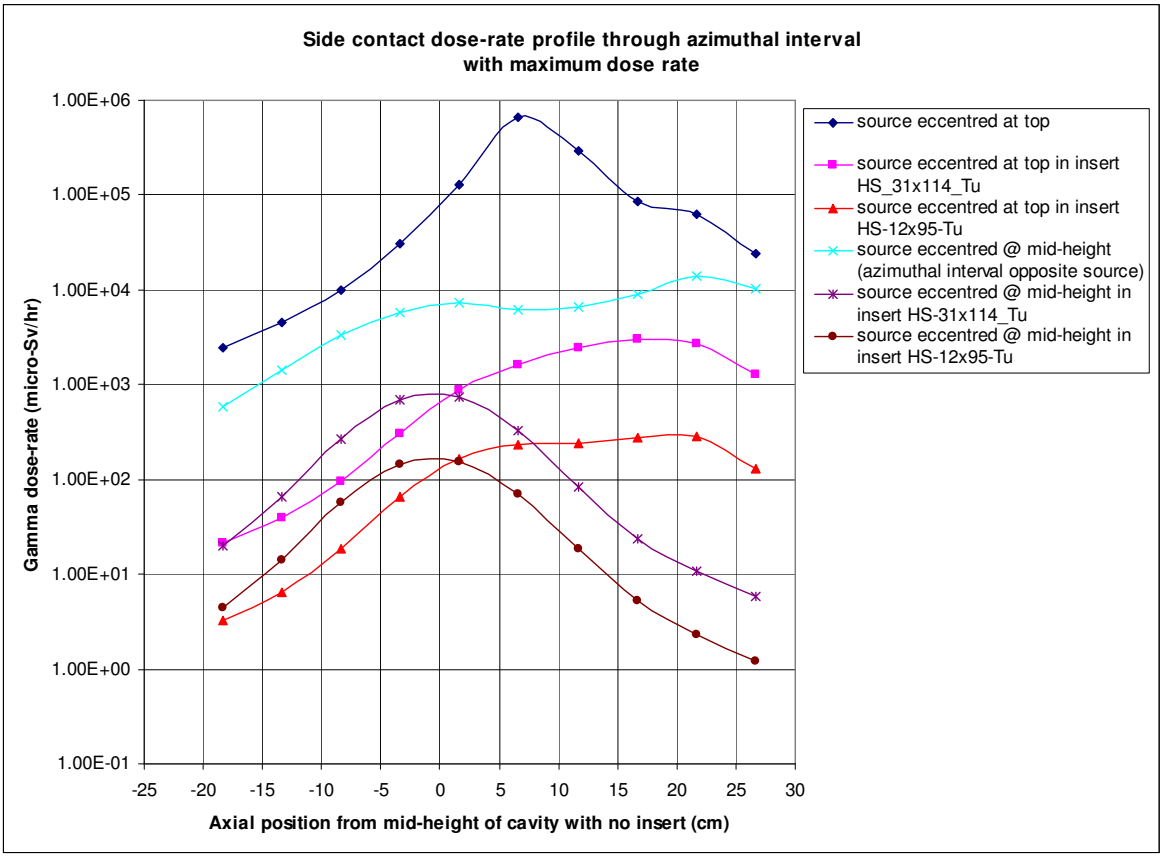

Figure 7: Axial dose-rate profiles at 1m for ^{137}Cs source

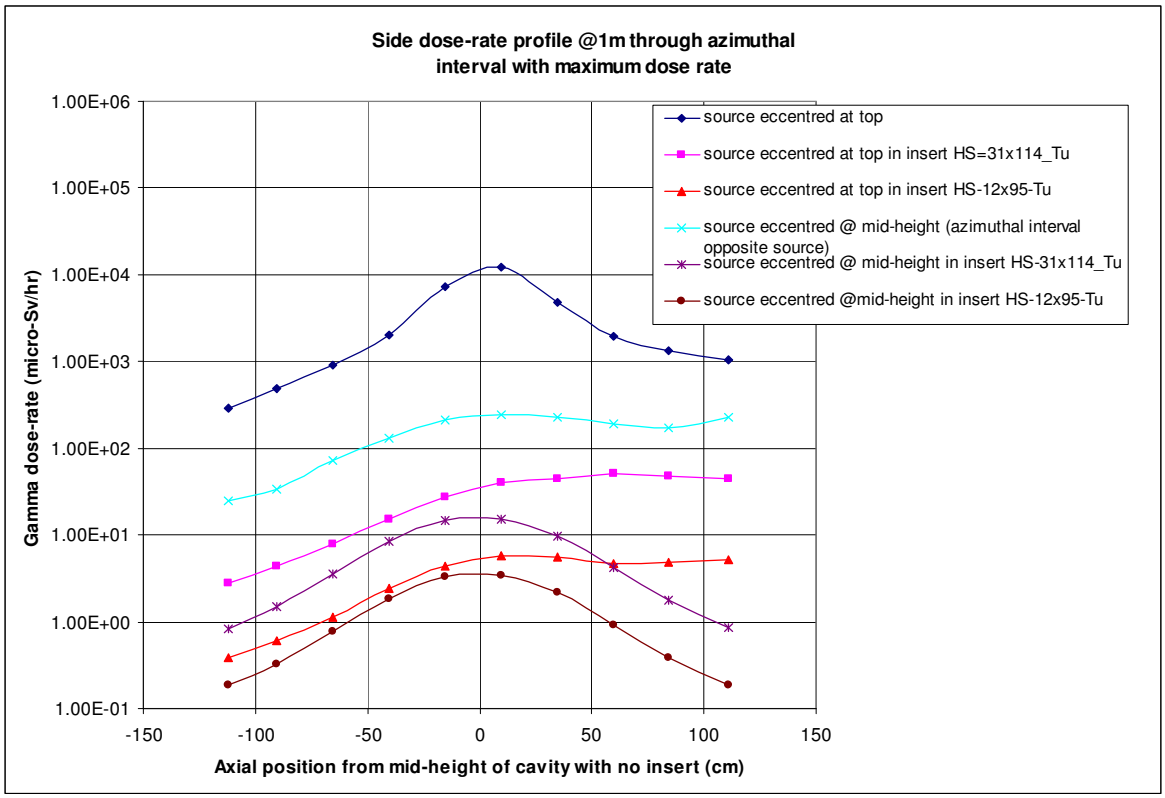

Appendix 1
Croft Safkeg HS drawings

Contents

Croft Safkeg HS drawings

0C-5949, Issue A Safkeg HS Construction

1C-5999, Issue A Containment Vessel HS Body Construction

1C-5997, Issue A Containment Vessel HS Lid Construction

3C-6851, Issue A HS-31 x 114 – Tu Insert Design No. 3985 (Construction)

3C-6850, Issue A HS-12 x 95 – Tu Insert Design No. 3982 (Construction)

Security-Related Information
Figure Withheld Under 10 CFR 2.390

Security-Related Information
Figure Withheld Under 10 CFR 2.390

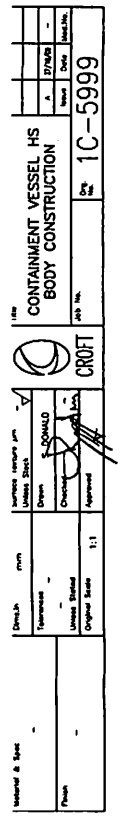

Security-Related Information
Figure Withheld Under 10 CFR 2.390

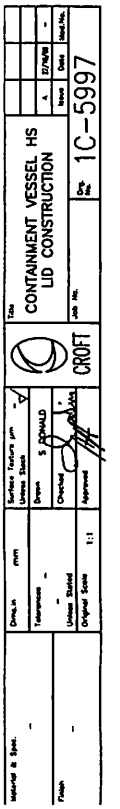

Security-Related Information
Figure Withheld Under 10 CFR 2.390

Material & Spec. –	Dimension mm	Surface Texture Unless Stock	CROFT	Title HS-31x114-Tu INSERT DESIGN No. 3985 (CONSTRUCTION)			
	Tolerances – – Unless Stated	Drawn S DONALD			A	13/3/13	–
Finish –		Checked			Issue	Date	Mod.No.
	Original Scale 1:1	Approved		Job No.	Drg. No. 3C-6851		

Security-Related Information
Figure Withheld Under 10 CFR 2.390

Material & Spec. –	Dimension mm	Surface Texture Unless Stock	CROFT	Title HS-12x95-Tu INSERT DESIGN No. 3982 (CONSTRUCTION)			
	Tolerances – – Unless Stated	Drawn S DONALD			A	13/3/13	–
Finish –		Checked			Issue	Date	Mod.No.
	Original Scale 1:1	Approved		Job No.	Drg. No. 3C-6850		

Distribution

S Marshall	Croft Associates Ltd
P Cowan	AMEC, Winfrith
NSER Database	AMEC, Winfrith