CHAPTER 8: OPERATING PROCEDURES

8.0 INTRODUCTION:

This chapter outlines the loading, unloading, and recovery procedures for the HI-STAR 100 System for storage operations. The procedures provided in this chapter are prescriptive to the extent that they provide the basis and general guidance for plant personnel in preparing detailed written site-specific loading, handling, storage and unloading procedures. The information provided in this chapter meets all requirements of NUREG-1536 [8.0.1].

Section 8.1 provides the procedure for loading the HI-STAR 100 System in the spent fuel pool. Section 8.2 provides guidance for ISFSI operations and general guidance for responding to abnormal events. Responses to abnormal events that may occur during normal loading operations are provided with the procedure steps. Section 8.3 provides the procedure for unloading the HI-STAR 100 System in the spent fuel pool. Section 8.4 provides the procedures for placement of the HI-STAR 100 System into storage directly from transport. Appendices A and B to the Certificate of Compliance (CoC) 1008, including the Technical Specifications provide functional and Operating Limits, Limiting Conditions for Operation (LCOs), Surveillance Requirements (SR's) and design features, as well as administrative information, such as Use and Application. FSAR Appendix 12.A includes Bases for the Functional and Operating Limits, and the LCOs. The Technical Specifications impose restrictions and requirements that must be applied throughout the loading and unloading process. Equipment specific operating details such as Vacuum Drying System valve manipulation and Transporter operation will be provided to users based on the specific equipment selected by the users and the configuration of the site.

Licensees (Users) will utilize the procedures provided in this chapter, the Technical Specifications, the conditions of the Certificate of Compliance, equipment-specific operating instructions, and plant working procedures and apply them to develop the site-specific written loading, handling, unloading and storage procedures. The procedures contained herein describe acceptable methods for performing HI-STAR 100 loading and unloading operations. Users may alter these procedures to allow operations to be performed in parallel or out of sequence as long as the general intent of the procedure is met. Users may add or delete steps in their site-specific implementation procedures provided the intent of these guidelines is met. In the figures following each section, acceptable configurations of rigging, piping, and instrumentation are shown. The equipment specified in this chapter is acceptable for use in performing the associated cask operations. Alternative equipment may be used provided the design and operation of the proposed alternate equipment is reviewed by the Certificate Holder. Any deviations to the rigging should be approved by the user's load handling authority.

The loading and unloading procedures in Section 8.1 and 8.3 can also be appropriately revised into written site-specific procedures to allow dry loading and unloading of the system in a hot cell or other remote handling facility. The Dry Transfer Facility (DTF) loading and unloading procedures are essentially the same with respect to loading, vacuum drying, inerting, and leakage testing of the MPC. The dry transfer facility shall develop the appropriate site-specific procedures as part of the DTF facility license.

Tables 8.1.1 and 8.1.2 provide the handling weights for each of the HI-STAR 100 System major components and the loads to be lifted during the operation of the HI-STAR 100 System. Table 8.1.3 provides the HI-STAR 100 System bolt torque and sequencing requirements. Table 8.1.4 provides an operational description of the HI-STAR 100 System ancillary equipment and its safety designation. Fuel assembly selection and verification shall be performed by the licensee in accordance with written, approved procedures which ensure that only SNF assemblies authorized in Appendix B to the Certificate of Compliance are loaded into the HI-STAR 100 System.

In addition to the requirements set forth in the CoC, users will be required to develop or modify existing programs and procedures to account for the operation of an ISFSI. Written procedures will be required to be developed or modified to account for such things as nondestructive examination (NDE) of the MPC welds, handling and storage of items and components identified as Important to Safety, 10CFR72.48 [8.0.2] programs, specialized instrument calibration, special nuclear material accountability at the ISFSI, security modifications, fuel handling procedures, training and emergency response, equipment and process qualifications. Users shall implement controls to ensure that the lifted weights do not exceed the HI-STAR 100 trunnion design limits. Users shall implement controls to monitor the time limit from the removal of the HI-STAR 100 from the spent fuel pool to the commencement of MPC draining to prevent boiling. Chapter 4 of the FSAR provides examples of the time limits based on representative spent fuel pool temperatures and design basis heat loads. Users shall also implement controls to ensure that the HI-STAR 100 overpack cannot be subjected to a fire in excess of design limits during both transport operations and storage operations.

Table 8.1.5 summarizes the instrumentation used to load and unload the HI-STAR 100 System. Tables 8.1.6 and 8.1.7 provide sample receipt inspection checklists for the HI-STAR 100 overpack and the MPC, respectively. Users shall develop site-specific receipt inspection checklists, as required. Fuel handling, including the handling of fuel assemblies in the Damaged Fuel Container (DFC) shall be performed in accordance with written site-specific procedures. Damaged fuel and fuel debris, as defined in the Technical Specifications appended to CoC 1008 shall be loaded in DFCs.

8.0.1 Technical and Safety Basis for Loading and Unloading Procedures:

The procedures herein (Sections 8.1 through 8.4) are developed for the loading, storage, handling, and unloading of spent fuel in the HI-STAR 100 System. The activities involved in loading of spent fuel in a canister system, if not carefully performed, may present personnel hazards and radiological impact. The design of the HI-STAR 100 System, including these procedures, the ancillary equipment, and the Technical Specifications, serve to minimize risks and mitigate consequences of potential events. To summarize, consideration is given in the loading and unloading systems and procedures to the potential events listed in Table 8.0.1.

The primary objective is to reduce the risk of occurrence and/or to mitigate the consequences of the event. The procedures contain Notes, Warnings, and Cautions to notify the operators of upcoming situations and provide additional information as needed. The Notes, Warnings and Cautions are purposely bolded and boxed, and immediately precede the applicable steps.

In the event of an extreme abnormal condition (e.g., cask drop or tip-over event) the user shall have appropriate procedural guidance to respond to the situation. As a minimum, the procedures shall address establishing emergency action levels, implementation of emergency action program, establishment of personnel exclusion zones, monitoring of radiological conditions, actions to mitigate or prevent the release of radioactive materials, and recovery planning and execution.

Table 8.0.1
OPERATIONAL CONSIDERATIONS

Potential Event:	Breached MPC in HI-STAR 100 overpack as it related to unloading operations
Methods Used to Address:	Procedural guidance is given to sample the HI-STAR 100 overpack annulus gas prior to opening of the HI-STAR 100 overpack penetrations.
References:	See Section 8.3.2 Step 4.
Potential Event:	Cask drop during handling operations
Methods Used to Address:	Lifting and handling equipment used to lift the cask higher than the lifting height limits is designed to ANSI N14.6 [8.0.3] and incorporates redundant drop protection features. Procedural guidance is given for cask handling, inspection of lifting equipment, and proper engagement to the trunnions. Technical Specifications provide lifting requirements.
References:	See Section 8.1.2. See LCO 2.1.3.
Potential Event:	Cask tip-over prior to welding of the MPC lid
Methods Used to Address:	The optional Lid Retention System is available to secure the MPC lid during movement between the spent fuel pool and the cask preparation area.
References:	See Section 8.1.5 Step 1. See Figure 8.1.14 and 8.1.16.
Potential Event:	Contamination of the MPC external shell
Methods Used to Address:	The annulus seal and Annulus Overpressure System minimize the potential for the MPC external shell to become contaminated from contact with the spent fuel pool water. Technical Specifications require surveys of the accessible portions of the MPC shell to monitor for removable contamination.
References:	See Figures 8.1.12 and 8.1.13. See LCO 2.2.2.
Potential Event:	Contamination spread from cask process system exhausts
Methods Used to Address:	All processing systems are equipped with exhausts that can be directed to the plant's processing systems or spent fuel pool.
References:	See Figures 8.1.19, 8.1.21, and 8.1.22.

Table 8.0.1
OPERATIONAL CONSIDERATIONS
(Continued)

Potential Event:	Damage to fuel assembly cladding from oxidation/thermal shock.
Methods Used to Address:	Fuel assemblies are never subjected to air or oxygen during loading and unloading operations. The Cool-Down System brings fuel assembly temperatures to below water boiling temperature using helium prior to reflooding with water during cask unloading operations.
References:	See Section 8.1.5 Step 24b and Section 8.3.2 Step 14.
Potential Event:	Damage to Vacuum Drying System vacuum gauges from positive pressure.
Methods Used to Address:	Vacuum Drying System is separate from pressurized gas and water systems.
References:	See Figure 8.1.22 and 8.1.23.
Potential Event:	Difficulty in installing the MPC lid.
Methods Used to Address:	The optional Lid Retention System has alignment pins to help guide the MPC lid into position during underwater installation.
References:	See Figure 8.1.14 and 8.1.16.
Potential Event:	Excess dose from grossly-damaged fuel assemblies
Methods Used to Address:	MPC gas sampling allows operators to determine the integrity of the fuel cladding prior to opening the MPC. This allows preparation and planning for handling of grossly-damaged fuel. The Removable Valve Operating Assemblies (RVOAs) allow the vent and drain ports to be operated like valves and prevent the need to hot tap into the penetrations during unloading operation.
References:	See Figure 8.1.15 and Section 8.3.2 Step 13.
Potential Event:	Excess dose to operators.
Methods Used to Address:	The procedures provide ALARA Notes and Warnings when radiological conditions may change.
References:	See ALARA Notes and Warnings throughout the procedures.

Table 8.0.1
OPERATIONAL CONSIDERATIONS
(Continued)

Potential Event:	Excess generation of radioactive waste
Methods Used to Address:	The HI-STAR 100 System uses process systems that minimize the amount of radioactive waste generated. Such features include smooth surfaces for ease of decontamination efforts, prevention of avoidable contamination, and procedural guidance to reduce decontamination requirements. Where possible, items are installed by hand and require no tools.
References:	Examples: HI-STAR 100 overpack bottom protective cover, bolt plugs in empty holes, pre-wetting of components.
Potential Event:	Ignition of combustible mixtures of gas (e.g., hydrogen) during MPC lid welding or cutting
Methods Used to Address:	Combustible gas monitoring will be performed and the space below the MPC lid will be exhausted or purged with an inert gas during welding and cutting operations.
References	See Section 8.1.5 Step 25a and Section 8.3.2 Step 14k.

8.1 PROCEDURE FOR LOADING THE HI-STAR 100 SYSTEM IN THE SPENT FUEL POOL

8.1.1 Overview of Loading Operations

The HI-STAR 100 System is used to load, unload, transfer and store spent fuel. Specific steps are performed to prepare the HI-STAR 100 System for fuel loading, to load the fuel, to prepare the system for storage and to place it in storage at an ISFSI. The HI-STAR 100 overpack may be transferred between the ISFSI and the fuel loading facility using a specially designed transporter, heavy haul transfer trailer, or any other load handling equipment designed for such applications as long as the lifting requirements described in LCO 2.1.3 are met. Users shall develop detailed written procedures to control on-site transport operations. Section 8.1.2 provides the general procedures for handling of the HI-STAR 100 overpack and MPC. Figure 8.1.1 shows a flow diagram of the HI-STAR 100 System loading operations. Figure 8.1.2 illustrates some of the major HI-STAR 100 System loading operations.

Note:
The procedures describe plant facilities, functions, and processes in general terms. Each site is different with regard to layout, organization and nomenclature. Users shall interpret the nomenclature used herein to suit their particular site, organization, and methods of operation.

Refer to the boxes of Figure 8.1.2 for the following description. At the start of loading operations, an empty MPC is upended (Box 1). The empty MPC is raised and inserted into the HI-STAR 100 overpack (Box 2). The annulus is filled with plant demineralized water and the MPC is filled with either spent fuel pool water or plant demineralized water (Box 3). An inflatable seal is installed in the annulus between the MPC and the HI-STAR 100 overpack to prevent spent fuel pool water from contaminating the exterior surface of the MPC. The HI-STAR 100 overpack and the MPC are then raised and lowered into the spent fuel pool for fuel loading using the lift yoke (Box 4). Pre-selected assemblies are loaded into the MPC and a visual verification of the assembly identification is performed (Box 5).

While still underwater, a thick, shielded lid (the MPC lid) is installed using either slings attached to the lift yoke or the Lid Retention System (Box 6). The lift yoke remotely engages to the HI-STAR 100 overpack lifting trunnions to lift the HI-STAR 100 overpack and loaded MPC close to the spent fuel pool surface (Box 7). When radiation dose rate measurements confirm that it is safe to remove the HI-STAR 100 overpack from the spent fuel pool, the cask is removed from the spent fuel pool. If the Lid Retention System is being used, the HI-STAR 100 overpack closure plate bolts are installed to secure the MPC lid for the transfer to the cask preparation area. The lift yoke and HI-STAR 100 overpack are sprayed with demineralized water to help remove contamination as they are removed from the spent fuel pool.

The HI-STAR 100 overpack is placed in the designated preparation area and the lift yoke and Lid Retention System retention disk are removed. The next phase of decontamination is then performed. The top surfaces of the MPC lid and the upper flange of the HI-STAR 100 overpack are decontaminated. The Temporary Shield Ring (if utilized) is installed and filled with water. The inflatable annulus seal is removed, and the annulus shield is installed. The Temporary Shield

Ring provides additional personnel shielding around the top of the HI-STAR 100 overpack during MPC closure operations. The annulus shield provides additional personnel shielding at the top of the annulus and also prevents small items from being dropped into the annulus. Dose rates are measured at the MPC lid and around the mid-height circumference of the HI-STAR 100 overpack to ensure that the dose rates are within expected values. The MPC water level is lowered slightly, the MPC is vented, and the MPC lid is seal welded using the Automated Welding System (Box 8). Visual examinations are performed on the tack welds. Liquid penetrant examinations are performed on the root and final passes. An ultrasonic or multi-layer PT examination is performed on the MPC Lid-to-Shell weld to ensure that the weld is satisfactory. As an alternative to volumetric examination of the MPC lid-to-shell weld, a multi-layer PT is performed including one intermediate examination after approximately every three-eighth inch of weld depth. The water level is raised to the top of the MPC and a hydrostatic test is performed on the primary MPC confinement welds to verify structural integrity. A small amount of water is displaced with helium gas for leakage testing. A helium leakage rate test is performed on the MPC lid-to-shell weld to verify weld integrity and to ensure that required leakage rates are within Technical Specification acceptance criteria (LCO 2.1.1).

The water level is raised to the top of the MPC again and then the MPC water is displaced from the MPC by blowdown of the water using pressurized helium or nitrogen gas introduced into the vent port of the MPC thus displacing the water through the drain line. The Vacuum Drying System (VDS) is connected to the MPC and is used to remove all residual liquid water from the MPC in a stepped evacuation process (Box 9). A stepped evacuation process is used to preclude the formation of ice in the MPC and Vacuum Drying System lines. The internal pressure is reduced to below 3 torr and held for 30 minutes to ensure that all liquid water is removed (LCO 2.1.1).

Following the dryness test, the VDS is disconnected, the Helium Backfill System (HBS) is connected, and the MPC is backfilled with a predetermined pressure of helium gas (LCO 2.1.1). The helium backfill ensures adequate heat transfer during storage, provides an inert atmosphere for long-term fuel integrity, and provides the means of future leakage rate testing of the MPC confinement boundary welds. Cover plates are installed and seal welded over the MPC vent and drain ports and liquid penetrant examinations are performed on the root (for multi-pass welds) and final passes (Box 10). The cover plates are helium leakage tested to confirm that they meet the established leakage rate criteria (LCO 2.1.1).

The MPC closure ring is then placed on the MPC and dose rates are measured at the MPC lid to ensure that the dose rates are within expected values. The closure ring is aligned, tacked in place and seal welded providing redundant closure of the MPC confinement boundary closure welds. Tack welds are visually examined, and the root (for multi-pass welds) and final welds are inspected using the liquid penetrant examination technique to ensure weld integrity.

The annulus shield is removed and the remaining water in the annulus is drained. The MPC lid and accessible areas at the top of the MPC shell are smeared for removable contamination and the HI-STAR 100 overpack dose rates are measured (LCO 2.2.1). The HI-STAR 100 overpack closure plate is installed (Box 11) and the bolts are torqued. The HI-STAR 100 overpack annulus

is vacuum dried and backfilled with helium gas (LCO 2.1.2). The HI-STAR 100 overpack mechanical seals are helium leakage tested to assure they will provide long-term retention of the annulus helium (LCO 2.1.2). The HI-STAR 100 overpack cover plates are installed. The Temporary Shield Ring is drained and removed. Dose rates are taken on the overpack to ensure that they are less than the Technical Specification limits (LCO 2.2.1).

The HI-STAR 100 overpack is moved to the ISFSI pad (Box 12). The HI-STAR 100 overpack may be moved using a number of methods as long as the lifting requirements of LCO 2.1.3 are met.

8.1.2 HI-STAR 100 System Receiving and Handling Operations:

Note:
The HI-STAR 100 overpack may be received and handled in several different configurations and may be transported on-site in a horizontal or vertical orientation. This section provides general guidance for the HI-STAR 100 overpack and MPC rigging and handling. Site-specific procedures shall specify the required operational sequences based on the cask handling configuration and limitations at the sites. Refer to LCO 2.1.3 for lifting requirements for a loaded overpack.

Note:
Steps 1 through 4 describe the handling operations using a lift yoke. Specialty rigging may be substituted if the lift complies with NUREG-0612 [8.0.4].

1. Vertical Handling of the HI-STAR 100 overpack:

Note:
Prior to performing any lifting operation, the removable shear ring segments under the two lifting trunnions must be removed.

a. Verify that the lift yoke load test certifications are current.

b. Visually inspect the lift yoke and the lifting trunnions for gouges, cracks, deformation or other indications of damage.

c. Engage the lift yoke to the lifting trunnions. See Figure 8.1.3.

d. Apply lifting tension to the lift yoke and verify proper engagement of the lift yoke.

Note:
Refer to the site's heavy load handling procedures for lift height, load path, floor loading and other applicable load handling requirements. Refer to LCO 2.1.3 for lifting requirements for a loaded HI-STAR 100 System.

e. Raise the HI-STAR 100 overpack and position it accordingly.

2. Upending of the HI-STAR 100 overpack in the transport frame:

Warning:
Personnel shall remain clear of the unshielded bottom of the loaded overpack. Users shall coordinate operations to keep the bottom cover installed to the maximum extent practicable whenever when the loaded overpack is downended.

a. If installed, remove the overpack bottom cover. Rigging points are provided. See Figure 8.1.4.

b. Position the HI-STAR 100 overpack under the lifting device. Refer to Step 1, above.

c. Verify that the lift yoke load test certifications are current.

d. Visually inspect the lift yoke and the lifting trunnions for gouges, cracks, deformation or other indications of damage.

e. Deleted.

f. Engage the lift yoke to the lifting trunnions. (The use of a ratchet strap or similar device to restrain the lift yoke arms is recommended during HI-STAR upending operation). See Figure 8.1.3.

g. Apply lifting tension to the lift yoke and verify proper engagement of the lift yoke.

h. Slowly rotate the HI-STAR 100 overpack to the vertical position keeping all rigging as close to vertical as practicable. See Figure 8.1.4.

i. Lift the pocket trunnions clear of the transport frame rotation trunnions.

j. Position the HI-STAR 100 overpack per site direction.

3. Downending of the HI-STAR 100 overpack in the transport frame:

a. Position the transport frame under the lifting device.

b. Verify that the lift yoke load test certifications are current.

c. Visually inspect the lift yoke and the lifting trunnions for gouges, cracks, deformation or other indications of damage.

d. Deleted.

e. Deleted.

f. Engage the lift yoke to the lifting trunnions. (The use of a ratchet strap or similar device to restrain the lift yoke arms is recommended during HI-STAR downending operation). See Figure 8.1.3.

g. Apply lifting tension to the lift yoke and verify proper lift yoke engagement.

h. Position the pocket trunnions to receive the transport frame rotation trunnions. See Figure 8.1.4.

i. Slowly rotate the HI-STAR 100 overpack to the horizontal position keeping all rigging as close to vertical as practicable.

j. Disengage the lift yoke.

Warning:
Personnel shall remain clear of the unshielded bottom of the loaded overpack. Users shall coordinate operations to keep the bottom cover installed to the maximum extent practicable whenever when the loaded overpack is downended.

k. If necessary for radiation shielding, install the overpack bottom cover. Rigging points are provided. See Figure 8.1.4.

4. Horizontal Handling of the HI-STAR 100 overpack in the transport frame:

a. Secure the transport frame for HI-STAR 100 downending.

b. Downend the HI-STAR 100 overpack on the transport frame per Step 3, if necessary.

c. Inspect the transport frame lift rigging in accordance with site approved rigging procedures.

d. Position the transport frame accordingly.

5. Empty MPC Installation in the HI-STAR 100 overpack:

Note:
To avoid side loading the MPC lift lugs, the MPC must be upended in the MPC Upending Frame (or equivalent). See Figure 8.1.5

a. If necessary, remove any MPC shipping covers and rinse off any road dirt with water. Be sure to remove any foreign objects from the MPC internals.

b. Upend the MPC as follows:

1. Visually inspect the MPC Upending Frame for gouges, cracks, deformation or other indications of damage.

2. Install the MPC on the Upending Frame. Make sure that the banding straps are secure around the MPC shell. See Figure 8.1.5.

Warning:
The Upending Frame rigging bars are equipped with cleats that prevent the slings from sliding along the bar. The slings must be placed to the outside of the cleats to prevent an out-of-balance condition. The Upending Frame rigging points are labeled.

3. Inspect the Upending Frame slings in accordance with the site's lifting equipment inspection procedures. Rig the slings around the bar in a choker configuration to the outside of the cleats. See Figure 8.1.5.

4. Attach the MPC upper end slings of the Upending Frame to the main overhead lifting device. Attach the bottom-end slings to a secondary lifting device (or a chain fall attached to the primary lifting device).

5. Raise the MPC in the Upending Frame.

Warning:
The Upending Frame corner should be kept close to the ground during the upending process.

6. Slowly lift the upper end of the Upending Frame while lowering the bottom end of the Upending Frame.

7. When the MPC approaches the vertical orientation, release the tension on the lower slings.

8. Place the MPC in a vertical orientation on a level surface.

9. Disconnect the MPC straps and disconnect the rigging.

c. Install the MPC in the HI-STAR 100 overpack as follows:

1. Install the four point lift sling to the lift lugs inside the MPC. See Figure 8.1.6.

Caution:
Be careful not to damage the seal seating surface during MPC installation.

2. Raise and place the MPC inside the HI-STAR 100 overpack.

Note:
An alignment punch mark is provided on the HI-STAR 100 overpack and the top edge of the MPC. Similar marks are provided on the MPC lid and closure ring. See Figure 8.1.7.

3. Rotate the MPC so the alignment marks agree and seat the MPC inside the HI-STAR 100 overpack. Disconnect the MPC rigging or the MPC lift rig.

8.1.3 HI-STAR 100 Overpack and MPC Receipt Inspection and Loading Preparation

ALARA Note:
A bottom protective cover may be attached to the HI-STAR 100 overpack bottom or placed in the designated preparation area and spent fuel pool. This will help prevent embedding contaminated particles in the HI-STAR 100 overpack bottom surface and ease the decontamination effort.

1. Place the HI-STAR 100 overpack in the cask receiving area. Perform appropriate contamination and security surveillances, as required.

2. If necessary, remove the HI-STAR 100 overpack closure plate by removing the closure plate bolts. See Figure 8.1.8 for rigging example.

   a. Place the closure plate on cribbing that protects the seal seating surfaces and allows access for seal replacement.

   b. Install the seal surface protector on the HI-STAR 100 overpack seal seating surface. See Figure 8.1.12.

3. Rinse off any road dirt with water. Inspect all cavity locations for foreign objects. Remove any foreign objects.

4. Disconnect the rigging.

5. Store the closure plate and bolts in a site-approved location.

6. At the site's discretion, perform an MPC receipt inspection and cleanliness inspection in accordance with a site-specific inspection checklist.

7. Install the MPC inside the HI-STAR 100 overpack and place the HI-STAR 100 overpack in the designated preparation area. See Section 8.1.2.

Note:
Fuel spacers are fuel-type specific. Not all fuel types require fuel spacers. Upper fuel spacers are threaded into the underside of the MPC lid. Fuel spacers may be loaded any time prior to insertion of the fuel assemblies in the MPC.

8. Install the upper fuel spacers in the MPC lid as follows:

Warning:
Never work under a suspended load.

   a. Position the MPC lid on supports to allow access to the underside of the MPC lid.

   b. Thread the fuel spacers into the holes provided on the underside of the MPC lid. See Figure 8.1.9 and Table 8.1.3 for torque requirements. See Figure 8.1.8.

c. Install threaded inserts in the MPC lid where and when spacers will not be installed, if necessary. See Table 8.1.3 for torque requirements.

9. Perform an MPC lid and closure ring fit test:

Note:
It will be necessary to perform the MPC installation and inspection in a location that has sufficient crane clearance to perform the operation.

a. Visually inspect the MPC lid rigging (See Figure 8.1.8).

b. Raise the MPC lid such that the drain line can be installed. Install the drain line to the underside of the MPC lid. See Figure 8.1.10.

Note:
The MPC Shell is relatively flexible compared to the MPC Lid and may create areas of local contact that impede Lid insertion in the Shell. Grinding of the MPC Lid below the minimum diameter on the drawing is permitted to alleviate interference with the MPC Shell in areas of localized contact. If the amount of material removed from the surface exceeds 1/8", the surface shall be examined by a liquid penetrant method (NB-2546). The weld prep for the Lid-to-Shell weld shall be maintained after grinding.

c. Align the MPC lid and lift yoke so the drain line will be positioned in the MPC drain location. See Figure 8.1.11. Install the MPC lid. Verify that the MPC lid fit and weld prep are in accordance with the approved design drawings.

ALARA Note:
The closure ring is installed by hand. No tools are required.

d. Install the closure ring. See Figure 8.1.7.

e. Verify that closure ring fit and weld prep are in accordance with the approved design drawings.

f. Remove the closure ring and the MPC lid. Disconnect the drain line. Store these components in an approved plant storage location.

Note:
Fuel spacers are fuel-type specific. Not all fuel types require fuel spacers. Lower fuel spacers are set in the MPC cells manually. No restraining devices are used. Fuel spacers may be loaded any time prior to insertion of the fuel assemblies in the MPC.

10. Install lower fuel spacers in the MPC (if required for the fuel type). See Figure 8.1.9.

11. Fill the MPC and annulus as follows:

Caution:
Do not use any sharp tools or instruments to install the inflatable seal. Some air in the inflatable seal helps in the installation.

a. Remove the HI-STAR 100 overpack drain port cover and port plug and install the drain connector. Store the drain port cover plate and port plug in an approved storage location.

b. Fill the annulus with plant demineralized water to just below the inflatable seal seating surface.

c. Manually insert the inflatable annulus seal around the MPC. See Figure 8.1.12.

d. Ensure that the seal is uniformly positioned in the annulus area.

e. Inflate the seal.

f. Visually inspect the seal to ensure that it is properly seated in the annulus. Deflate, adjust and inflate the seal as necessary. Replace the seal as necessary.

ALARA Note:
Waterproof tape placed over empty bolt holes, and bolt plugs may reduce the time required for decontamination.

12. At the user's discretion, install the HI-STAR 100 overpack closure plate bolt plugs and/or apply waterproof tape over any empty bolt holes.

ALARA Note:
Keeping the water level below the top of the MPC prevents splashing during handling.

13. Fill the MPC with either demineralized water or spent fuel pool water to approximately 12 inches below the top of the MPC shell.

14. Place the HI-STAR 100 overpack in the spent fuel pool as follows:

ALARA Note:
The optional Annulus Overpressure System is used to provide further protection against MPC external shell contamination during in-pool operations.

a. If used, fill the Annulus Overpressure System lines and reservoir with demineralized water and close the reservoir valve. Attach the Annulus Overpressure System to the HI-STAR 100 overpack. See Figure 8.1.13.

b. Engage the lift yoke to the HI-STAR 100 overpack lifting trunnions and position the HI-STAR 100 overpack over the cask loading area with the basket aligned to the orientation of the spent fuel racks.

ALARA Note:
Wetting the components that enter the spent fuel pool may reduce the amount of decontamination work to be performed later.

c. Wet the surfaces of the HI-STAR 100 overpack and lift yoke with plant demineralized water while slowly lowering the HI-STAR 100 overpack into the spent fuel pool.

d. When the top of the HI-STAR 100 overpack reaches the elevation of the reservoir, open the Annulus Overpressure System reservoir valve. Maintain the reservoir water level at approximately 3/4 full the entire time the cask is in the spent fuel pool.

e. Place the HI-STAR 100 overpack on the floor of the cask loading area and disengage the lift yoke. Visually verify that the lift yoke is fully disengaged. Remove the lift yoke from the spent fuel pool while spraying the crane cables and yoke with plant demineralized water.

8.1.4 MPC Fuel Loading

Note:
An underwater camera or other suitable viewing device may be used for monitoring underwater operations.

1. Perform a fuel assembly selection verification using plant fuel records to ensure that only fuel assemblies that meet all the conditions for loading as specified in Appendix B to Certificate of Compliance 1008 have been selected for loading into the MPC.

2. Load the pre-selected fuel assemblies into the MPC in accordance with the approved fuel loading pattern.

3. Perform a post-loading visual verification of the assembly identification to confirm that the serial numbers match the approved fuel loading pattern.

8.1.5 MPC Closure

Note:
The user may elect to use the optional Lid Retention System (See Figure 8.1.14) to assist in the installation of the MPC lid and attachment of the lift yoke, and to provide the means to secure the MPC lid in the event of a drop or tip-over accident during loaded cask handling operations outside of the spent fuel pool. The user is responsible for evaluating the additional weight imposed on the cask, lift yoke, crane and floor prior to use to ensure that its use does not exceed the crane capacity, heavy loads handling restrictions, or 250,000 pounds. See Tables 8.1.1 and 8.1.2.

1. Visually inspect the MPC lid rigging or Lid Retention System in accordance with site-approved rigging procedures. Attach the MPC lid to the lift yoke so that MPC lid, drain line and trunnions will be in relative alignment. Raise the MPC lid and adjust the rigging so the MPC lid hangs level as necessary.

2. Install the drain line to the underside of the MPC lid. See Figure 8.1.10.

3. Align the MPC lid and lift yoke so the drain line will be positioned in the MPC drain location and the cask trunnions will also engage. See Figure 8.1.11 and 8.1.16.

ALARA Note:
Wetting the components that enter the spent fuel pool may reduce the amount of decontamination work to be performed later.

4. Slowly lower the MPC lid into the pool and insert the drain line into the drain access location and visually verify that the drain line is correctly oriented. See Figure 8.1.11.

5. Lower the MPC lid while monitoring for any hang-up of the drain line. If the drain line becomes kinked or disfigured for any reason, remove the MPC lid and replace the drain line.

Note:
The upper surface of the MPC lid will seat approximately flush with the top edge of the MPC shell when properly installed. Once the MPC lid is installed, the HI-STAR/MPC removal from the spent fuel pool should proceed in a continuous manner to minimize the rise in MPC water temperature.

6. Seat the MPC lid in the MPC and visually verify that the lid is properly installed.

7. Engage the lift yoke to the HI-STAR 100 overpack lifting trunnions.

8. Apply a slight tension to the lift yoke and visually verify proper engagement of the lift yoke to the lifting trunnions.

ALARA Note:
Activated debris may have settled on the top face of the HI-STAR 100 overpack and MPC during fuel loading. The cask top surface should be kept under water until a preliminary dose rate scan clears the cask for removal.

9. Raise the HI-STAR 100 overpack until the MPC lid is just below the surface of the spent fuel pool. Survey the area above the cask lid to check for hot particles. Raise and flush the upper surface of the HI-STAR 100 overpack and MPC with the plant demineralized water hoses as necessary to remove any activated particles from the HI-STAR 100 overpack or the MPC lid.

10. Visually verify that the MPC lid is properly seated. Lower the HI-STAR 100 overpack, reinstall the MPC lid, and repeat Step 9, as necessary.

11. If the Lid Retention System is used, inspect the closure plate bolts for general condition. Replace worn or damaged bolts with new bolts.

12. Install the Lid Retention System bolts if the Lid Retention System is used.

Warning:
Cask removal from the spent fuel pool is the heaviest lift that occurs during HI-STAR 100 loading operations. The HI-STAR 100 trunnions must not be subjected to lifted loads in excess of 250,000 lbs. Users may elect to pump a measured quantity of water from the MPC prior to removing the HI-STAR 100 from the spent fuel pool. See Table 8.1.1 and 8.1.2 for weight information.

13. If necessary for lifted weight conditions, pump a measured amount of water from the MPC. See Figure 8.1.18 and Tables 8.1.1 and 8.1.2.

14. Continue to raise the HI-STAR 100 overpack under the direction of the plant's radiological control personnel. Continue rinsing the surfaces with demineralized water. When the top of the HI-STAR 100 overpack reaches the approximate elevation as the reservoir, close the Annulus Overpressure System reservoir valve. See Figure 8.1.13.

Caution:
Users are required to take necessary actions to prevent boiling of the water in the MPC. This may be accomplished by performing a site-specific analysis to identify a time limitation to ensure that water boiling will not occur in the MPC prior to the initiation of draining operations. Chapter 4 of the FSAR provides some sample time limits for the time to initiation of draining for various spent fuel pool water temperatures using design basis heat loads. These time limits may be adopted if the user chooses not to perform a site-specific analysis. If time limitations are imposed, users shall have appropriate procedures and equipment to take action if time limits are approached or exceeded. One course of action involves initiating an MPC water flush for a certain duration and flow rate. Any site-specific analysis shall identify the methods to respond should it become likely that the imposed time limit could be exceeded.

ALARA Note:
To reduce decontamination time, the surfaces of the HI-STAR 100 overpack and lift yoke should be kept wet until decontamination begins.

15. Remove the HI-STAR 100 overpack from the spent fuel pool while spraying the surfaces with plant demineralized water. Record the time.

ALARA Note:
Decontamination of the HI-STAR 100 overpack bottom should be performed using pole-mounted cleaning devices.

16. Decontaminate the HI-STAR 100 overpack bottom and perform a contamination survey of the HI-STAR 100 overpack bottom. Remove the bottom protective cover, if used.

17. If used, disconnect the Annulus Overpressure System from the HI-STAR 100 overpack. See Figure 8.1.13.

18. Set the HI-STAR 100 overpack in the designated cask preparation area.

19. Disconnect the lifting slings or Lid Retention System (if used) from the MPC lid and disengage the lift yoke. Decontaminate and store these items in an approved storage location.

Warning:
MPC lid dose rates are measured to ensure that dose rates are within expected values. Dose rates exceeding the 429 mrem/hour could indicate that fuel assemblies not meeting the specifications of Appendix B to CoC 1008 have been loaded.

a. Measure the dose rates at the MPC lid and verify that the combined gamma and neutron dose rate is below 429 mrem/hour.

20. Perform decontamination of the HI-STAR 100 overpack.

21. Prepare the MPC for MPC lid welding as follows:

ALARA Note:
If the Temporary Shield Ring is not used, some form of gamma shielding (e.g. lead bricks or blankets) should be placed in the areas above the HI-STAR neutron shield to eliminate the localized hot spot.

a. Decontaminate the area around the HI-STAR 100 overpack top flange and install the Temporary Shield Ring, (if used). See Figure 8.1.17.

b. Fill the Temporary Shield Ring with water (if used).

c. Carefully decontaminate the MPC lid top surface and the shell area above the inflatable annulus seal.

d. Deflate and remove the annulus seal.

ALARA Note:
The water in the HI-STAR 100 overpack-to-MPC annulus provides personnel shielding. The level should be checked periodically and refilled accordingly.

22. Attach the drain line to the HI-STAR 100 overpack drain port connector and lower the annulus water level approximately 6 inches.

ALARA Note:
The MPC exterior shell survey is performed to evaluate the performance of the inflatable annulus seal. Indications of contamination could require the MPC to be unloaded.

a. Survey the MPC lid top surfaces and the accessible areas of the top two inches of the MPC shell in accordance with the requirements of LCO 2.2.2.

ALARA Note:
The annulus shield is used to prevent objects from being dropped into the annulus and helps reduce dose rates directly above the annulus region. The annulus shield is hand installed and requires no tools.

23. Install the annulus shield. See Figure 8.1.12.

24. Prepare for MPC lid welding as follows:

Note:
The following steps use two identical Removable Valve Operating Assemblies (RVOAs) (See Figure 8.1.15) to engage the MPC vent and drain ports. The MPC vent and drain ports are equipped with metal-to-metal seals to minimize leakage during vacuum drying, and to withstand the long-term effects of temperature and radiation. The RVOAs allow the vent and drain ports to be operated like valves and prevent the need to hot tap into the penetrations during unloading operations. The RVOAs are purposely not installed until the cask is removed from the spent fuel pool to reduce the amount of decontamination.

Note:
The vent and drain ports are opened by pushing the RVOA handle down to engage the square nut on the cap and turning the handle fully in the counter-clockwise direction. The handle will not turn once the port is fully open. Similarly, the vent and drain ports are closed by turning the handle fully in the clockwise direction. The ports are closed when the handle cannot be turned further.

a. Clean the vent and drain ports to remove any dirt. Install the RVOAs (See Figure 8.1.15) to the vent and drain ports leaving caps open.

ALARA Warning:
Personnel should remain clear of the drain lines any time water is being pumped or purged from the MPC. Assembly crud, suspended in the water, may create a radiation hazard to workers. Controlling the amount of water pumped from the MPC prior to welding keeps the fuel assembly cladding covered with water yet still allows room for thermal expansion.

b. Attach the water pump to the drain port (See Figure 8.1.18) and pump between 50 and 120 gallons of MPC water to the spent fuel pool or liquid radwaste system. The water level is lowered to keep moisture away from the weld region.

c. Disconnect the water pump.

25. Weld the MPC lid as follows:

ALARA Warning:
Grinding of MPC welds may create the potential for contamination. All grinding activities shall be performed under the direction of radiation protection personnel.

Caution:

Oxidation of Boral panels contained in the MPC may create hydrogen gas while the MPC is filled with water. Appropriate monitoring for combustible gas concentrations shall be performed prior to, and during MPC lid welding operations. The space below the MPC lid shall be exhausted or purged with inert gas prior to, and during MPC lid welding operations to provide additional assurance that flammable gas concentrations will not develop in this space.

Note:
Exhausting or purging may help improve the weld quality by keeping moist air from condensing on the MPC lid weld area. The vacuum source can be supplied from a wet/dry vacuum cleaner or small vacuum pump.

a. Attach a vacuum source to the vent port or inert the gas space under the MPC lid and begin monitoring for combustible gas concentrations.

ALARA Warning:
It may be necessary to rotate or reposition the MPC lid slightly to achieve uniform weld gap and lid alignment. A punch mark is located on the outer edge of the MPC lid and shell. These marks are aligned with the alignment mark on the top edge of the HI-STAR 100 overpack (See Figure 8.1.7). If necessary, the MPC lid lift should be performed using a hand operated chain fall to closely control the lift to allow rotation and repositioning by hand. If the chain fall is hung from the crane hook, the crane should be tagged out of service to prevent inadvertent use during this operation. Continuous radiation monitoring is recommended.

b. If necessary center the lid in the MPC shell using a hand-operated chain fall.

Note:
The MPC is equipped with lid shims that serve to close the gap in the joint for MPC lid closure weld.

c. As necessary, install the MPC lid shims around the MPC lid to make the weld gap uniform.

ALARA Note:
The optional AWS Baseplate shield is used to further reduce the dose rates to the operators working around the top cask surfaces.

d. Install the Automated Welding System baseplate shield (if used). See Figure 8.1.8 for rigging.

e. Install the Automated Welding System Robot (if used). See Figure 8.1.8 for rigging.

f. Perform the MPC Lid-to-Shell weld and NDE with approved procedures. (See 9.1 and Table 2.2.15)

g. Deleted.

h. Disconnect the vacuum /purge source from the MPC and terminate combustible gas monitoring.

i. Deleted.

j. Deleted.

k. Deleted.

26. Perform hydrostatic and MPC leakage rate testing as follows:

ALARA Note:
The leakage rates are determined before the MPC is drained for ALARA reasons. A weld repair is a lower dose activity if water remains inside the MPC.

a. Attach the drain line to the vent port and route the drain line to the spent fuel pool or the plant liquid radwaste system. See Figure 8.1.19 for the hydrostatic test arrangement.

ALARA Warning:
Water flowing from the MPC may carry activated particles and fuel particles. Apply appropriate ALARA practices around the drain line.

b. Fill the MPC with either spent fuel pool water or plant demineralized water until water is observed flowing out of the vent port drain hose.

Note:
Section 9.1.2.2.2 of the FSAR provides additional details on performance of the hydrostatic test.

c. Perform a hydrostatic test of the MPC as follows:

1. Close the drain valve and pressurize the MPC to 125 +5/-0 psig.

2. Close the inlet valve and monitor the pressure for a minimum of 10 minutes.

3. Following the 10-minute hold period, visually examine the MPC lid-to-shell weld for leakage of water. The acceptance criteria is no observable water leakage.

d. Release the MPC internal pressure, disconnect the water fill line and drain line from the vent and drain port RVOAs leaving the vent and drain port caps open.

1. Perform Required NDE inspections on MPC Lid to Shell Weld.

e. Attach a regulated helium supply to the vent port and attach the drain line to the drain port as shown on Figure 8.1.21.

f. Verify the correct pressure on the helium supply and open the helium supply valve. Drain approximately 5 to 10 gallons.

g. Close the drain port valve and pressurize the MPC.

h. Close the vent port.

Note:
The leakage detector may detect residual helium in the atmosphere. If the leakage tests detects a leak, the area should be flushed with nitrogen or compressed air and the location should be retested.

i. Perform a helium sniffer probe leakage rate test of the MPC lid-to shell weld in accordance with the Mass Spectrometer Leak Detector (MSLD) manufacturer's instructions and ANSI N14.5 [8.1.2]. The MPC helium leakage rate test acceptance criteria are specified in LCO 2.1.1.

j. Repair any weld defects in accordance with the site's approved weld repair procedures. Reperform the Ultrasonic, Hydrostatic and Helium Leakage tests if weld repair is performed.

27. Drain the MPC as follows:

ALARA Warning:
Dose rates will rise as water is drained from the MPC. Continuous dose rate monitoring is recommended.

a. Attach a regulated helium or nitrogen supply to the vent port.

b. Attach a drain line to the drain port shown on Figure 8.1.21.

c. Verify the correct pressure on the gas supply.

d. Open the gas supply valve and record the time at the start of MPC draindown.

Note:
An optional warming device may be placed under the HI-STAR 100 Overpack to replace the heat lost during the evaporation process of vacuum drying. This may be used at the user's discretion for older and colder fuel assemblies to reduce vacuum drying times.

e. Start the warming device, if used.

f. Blow the water out of the MPC until water ceases to flow out of the drain line. Shut the gas supply valve.

g. Disconnect the gas supply line from the MPC.

h. Disconnect the drain line from the MPC.

28. Vacuum Dry the MPC as follows:

Note:
Vacuum drying is performed to remove moisture and oxidizing gasses from the MPC. This ensures a suitable environment for long-term storage of spent fuel assemblies and ensures that the MPC pressure remains within design limits. The vacuum drying process reduces the MPC internal pressure in stages. Dropping the internal pressure too quickly may cause the formation of ice in the fittings. Ice formation could result in incomplete removal of moisture from the MPC.

a. Attach the Vacuum Drying System (VDS) to the vent and drain port RVOAs. See Figure 8.1.22.

Note:
The Vacuum Drying System may be configured with an optional fore-line condenser

b. Deleted.

c. Deleted.

d. Deleted.

e. Deleted.

Note:
To prevent freezing of water, the MPC internal pressure should be lowered in incremental steps. The Vacuum Drying System pressure will remain at about 30 torr until most of the liquid water has been removed from the MPC.

f. Open the VDS suction valve and reduce the MPC pressure to below 3 torr.

g. Shut the VDS valves and verify a stable MPC pressure on the vacuum gage.

Note:
The MPC pressure may rise due to the presence of water in the MPC. The dryness test may need to be repeated several times until all the water has been removed. Leaks in the Vacuum Drying System, damage to the vacuum pump, and improper vacuum gauge calibration may cause repeated failure of the dryness verification test. These conditions should be checked as part of the corrective actions if repeated failure of the dryness verification test is occurring.

h. Perform the MPC dryness verification test in accordance with the acceptance criteria of LCO 2.1.1.

i. Close the vent and drain port valves.

j. Disconnect the VDS from the MPC.

k. Stop the warming device, if used.

l. Close the drain port RVOA cap and remove the drain port RVOA.

Note:
Helium backfill requires 99.995% (minimum) purity.

29. Backfill the MPC as follows:

    a. Set the helium bottle regulator pressure to the appropriate pressure.

    b. Purge the Helium Backfill System to remove oxygen from the lines.

    c. Attach the Helium Backfill System (HBS) to the vent port as shown on Figure 8.1.23 and open the vent port.

    d. Slowly open the helium supply valve while monitoring the pressure rise in the MPC.

    e. Deleted

Note:
If helium bottles need to be replaced, the bottle valve needs to be closed and the entire regulator assembly transferred to the new bottle.

    f. Carefully backfill the MPC to greater than 0 psig and less than the maximum pressure specified in LCO 2.1.1.

    g. Disconnect the HBS from the MPC.

    h. Close the vent port RVOA and disconnect the vent port RVOA.

30. Weld the vent and drain port cover plates as follows:

    a. Wipe the inside area of the vent and drain port recesses to dry and clean the surfaces.

    b. Place the cover plate over the vent port recess.

    c. Insert the nozzle of the helium supply into the vent port recess to displace the oxygen.

Note:
Helium gas is required to be injected into the port recesses to ensure that the leakage test is valid.

    d. Deleted.

    e. Weld the cover plate and perform NDE with approved procedures. (See 9.1 and Table 2.2.15)

    f. Deleted.

g. Deleted.

h. Deleted.

i. Deleted..

j. Deleted..

k. Repeat Steps 30.a through 30.j for the drain port cover plate.

31. Perform a leakage test of the MPC vent and drain port cover plates as follows:

Note:
The leakage detector may detect residual helium in the atmosphere from the helium injection process. If the leakage tests detects a leak, the area should be blown clear with compressed air or nitrogen and the location should be retested.

a. Flush the area around the vent and drain cover plates with compressed air or nitrogen to remove any residual helium gas.

b. Perform a helium leakage rate test of vent and drain cover plate welds in accordance with the Mass Spectrometer Leak Detector (MSLD) manufacturer's instructions and ANSI N14.5 [8.1.2]. The MPC helium leakage rate test acceptance criteria are specified in LCO 2.1.1.

c. Repair any weld defects in accordance with the site's approved code weld repair procedures. Reperform the leakage test as required.

32. Weld the MPC closure ring as follows:

ALARA Note:
The closure ring is installed by hand. No tools are required.

a. Install and align the closure ring. See Figure 8.1.7.

b. Weld the closure ring to the MPC shell and the MPC lid, and perform NDE with approved procedures (See 9.1 and Table 2.2.15).

c. Deleted.

d. Deleted.

e. Deleted.

f. Deleted.

g. Deleted.

h. Deleted.

i. Deleted.

j. Remove the Automated Welding System (if used).

k. If necessary, remove the AWS baseplate shield. See Figure 8.1.8 for rigging.

8.1.6 Preparation for Storage

1. Remove the annulus shield and seal surface protector and store it in an approved plant storage location

ALARA Warning:
Dose rates will rise around the top of the annulus as water is drained from the annulus. Apply appropriate ALARA practices.

2. Attach a drain line to the HI-STAR 100 overpack drain connector and drain the remaining water from the annulus to the spent fuel pool or the plant liquid radwaste system (See Figure 8.1.13).

3. Install the overpack closure plate as follows:

   a. Remove any waterproof tape or bolt plugs used for contamination mitigation.

   b. Clean the closure plate seal seating surface and the HI-STAR 100 overpack seal seating surface and install new overpack closure plate mechanical seals.

   c. Remove the test port plug and store it in a site-approved location. Discard any used metallic seals.

Note:
Care should be taken to protect the seal seating surface from scratches, nicks or dents.

   d. Install the closure plate (see Figure 8.1.8). Disconnect the closure plate lifting eyes and install the bolt hole plugs in the empty bolt holes (See Table 8.1.3 for torque requirements).

   e. Install and torque the closure plate bolts. See Table 8.1.3 for torque requirements.

   f. Remove the vent port cover plate and remove the port plug and seal. Discard any used mechanical seals.

4. Dry the overpack annulus as follows:

   a. Disconnect the drain connector from the overpack.

   b. Install the drain port plug with a new seal and torque the plug. See Table 8.1.3 for torque requirements. Discard any used metallic seals.

Note:
Preliminary annulus vacuum drying may be performed using the test cover to improve flow rates and reduce vacuum drying time. Dryness testing and helium backfill shall use the backfill tool.

c. Load the backfill tool with the HI-STAR 100 overpack vent port plug and the vent port with a new plug seal. Attach the backfill tool to the HI-STAR 100 overpack vent port with the plug removed. See Figure 8.1.24. See Table 8.1.3 for torque requirements.

d. Deleted.

e. Deleted.

f. Deleted.

g. Deleted.

Note:
To prevent freezing of water, the MPC internal pressure should be lowered in incremental steps. The Vacuum Drying System pressure will remain at about 30 torr until most of the liquid water has been removed from the overpack.

h. Deleted.

i. Open the Vacuum Drying System suction valve and reduce the HI-STAR 100 overpack pressure to below 3 torr.

Note:
The annulus pressure may rise due to the presence of water in the HI-STAR 100 overpack. The dryness test may need to be repeated several times until all the water has been removed. Leaks in the Vacuum Drying System, damage to the vacuum pump, and improper vacuum gauge calibration may cause repeated failure of the dryness verification test. These conditions should be checked as part of the corrective actions if repeated failure of the dryness verification test is occurring.

j. Perform a HI-STAR 100 overpack Annulus Dryness Verification in accordance with LCO 2.1.2.

5. Backfill, and leakage test the overpack as follows:

a. Attach the helium supply to the backfill tool.

b. Verify the correct pressure on the helium supply (pressure set to10+4/-0 psig) and open the helium supply valve.

c. Backfill the HI-STAR 100 overpack annulus in accordance with LCO 2.1.2.

d. Install the overpack vent port plug and torque. See Table 8.1.3 for torque requirements.

e. Disconnect the overpack backfill tool from the vent port.

f. Flush the overpack vent port recess with compressed air to remove any standing helium gas.

g. Install the overpack test cover to the overpack vent port as shown on Figure 8.1.25. See Table 8.1.3 for torque requirements.

h. Evacuate the test cavity per the MSLD manufacturer's instructions and isolate the vacuum pump from the overpack test cover.

i. Perform a leakage rate test of overpack vent port plug per the MSLD manufacturer's instructions and ANSI N14.5 [8.1.2]. The helium leakage rate test acceptance criterion is specified in LCO 2.1.2.

j. Remove the overpack test cover and install a new metallic seal on the overpack vent port cover plate. Discard any used metallic seals.

k. Install the vent port cover plate and torque the bolts. See Table 8.1.3 for torque requirements.

l. Repeat Steps 5.f through 5.k for the overpack drain port.

6. Leak test the overpack closure plate inner mechanical seal as follows:

a. Attach the closure plate test tool to the closure plate test port with the MSLD attached. See Figure 8.1.26. See Table 8.1.3 for torque requirements.

b. Evacuate the closure plate test port tool and closure plate inter-seal area per the MSLD manufacturer's instructions.

c. Perform a leakage rate test of overpack closure plate inner mechanical seal in accordance with the MSLD manufacturer's instructions and ANSI N14.5 [8.1.2]. The helium leakage rate test acceptance criterion is specified in LCO 2.1.2.

d. Remove the closure plate test tool from the test port and install the test port plug with a new mechanical seal. See Table 8.1.3 for torque requirements. Discard any used metallic seals.

7. Drain the Temporary Shield Ring (Figure 8.1.17), if used. Remove the ring segments and store them in an approved plant storage location.

ALARA Warning:
For ALARA reasons, decontamination of the overpack bottom shall be performed using pole-mounted cleaning tools or other remote cleaning devices.

ALARA Warning:
If the overpack is to be downended on the transport frame, the bottom shield should be installed quickly. Personnel should remain clear of the bottom of the unshielded overpack.

a. Raise the HI-STAR 100 overpack and decontaminate the overpack bottom and perform a final survey and decontamination of the overpack. The acceptance criteria are the user's site requirements for transporting items out of the radiological controlled area or the LCO 2.2.2 (whichever is more restrictive).

8. Verify that the HI-STAR 100 overpack dose rates are within the requirements of LCO 2.2.1.

8.1.7 Placement of the HI-STAR 100 Overpack into Storage

1. Secure the HI-STAR 100 overpack to the transporter as necessary. See Figure 8.1.27 for several transporter options.

2. Verify lifting requirements of LCO 2.1.3 are met.

3. Remove the transporter wheel chocks (if necessary) and transfer the HI-STAR 100 overpack to the ISFSI along the site-approved transfer route.

Note:
The HI-STAR 100 minimum pitch shall be 12 feet (nominal).

4. Transfer the HI-STAR 100 overpack to its designated storage location at the appropriate pitch. See Figure 8.1.28.

5. Install the HI-STAR 100 overpack pocket trunnion plugs and shear ring segments, if necessary. See Table 8.1.3 for torque requirements. See Figure 8.1.29.

ALARA Note:
The optional overpack bottom ring is used to reduce dose rates around the base of the HI-STAR 100 overpack. The segments are slid into place under the HI-STAR 100 overpack neutron shield.

6. If used, install the Overpack Bottom Ring (Figure 8.1.30).

Table 8.1.1

ESTIMATED HANDLING WEIGHTS OF HI-STAR 100 SYSTEM COMPONENTS††††

Component	Weight (lbs)		Case† Applicability			
	MPC-24	MPC-68	1	2	3	4
Empty HI-STAR 100 overpack (without closure plate)	145,726	145,726	1	1	1	1
HI-STAR 100 overpack lid (closure plate without rigging)	7,984	7,984		1	1	1
Empty MPC (without lid or closure ring)	29,075	28,502	1	1	1	1
MPC lid (without fuel spacers or drain line)	9677	10,194	1	1	1	1
MPC Closure Ring	145	145		1	1	1
MPC Lower Fuel Spacers (variable)††	401	258	1	1	1	1
MPC Upper Fuel Spacers (variable)††	144	315	1	1	1	1
MPC Drain Line	50	50	1	1	1	1
Fuel (design basis without non-fuel bearing components)	36,360	42,092	1	1	1	1
Damaged Fuel Container (Dresden 1)	0	150				
Damaged Fuel Container (Humboldt Bay)	0	120				
MPC water (with fuel in MPC)†††	17,630	16,957	1			
Annulus Water	280	280	1			
HI-STAR 100 overpack Lift Yoke (with slings)	3600	3600	1	1		
Annulus Seal	50	50	1			
Lid Retention System (optional)	2300	2300				
Transport Frame	6700	6700				1
Overpack Bottom Cover (optional)	6400	6400				1
Temporary Shield Ring (optional)	2500	2500				
Automated Welding System Baseplate Shield (optional)	2000	2000				
Automated Welding System Robot	1900	1900				
Pocket Trunnion Plugs (optional)	60	60			1	
Overpack Bottom Ring (optional)	1300	1300			1	

1.† See Table 8.1.2.

†† The fuel spacers referenced in this table are for the heaviest fuel assembly for each MPC. This yields the maximum weight of fuel assemblies and spacers.

††† Varies by fuel type and loading configuration. Users may opt to pump some water from the MPC prior to removal from the spent fuel pool to reduce the overall lifted weight.

†††† Actual component weights are dependant upon as-built dimensions. The values provided herein are estimated. FSAR analyses use bounding values provided elsewhere. Users are responsible for ensuring lifted loads meet site capabilities and requirements.

TABLE 8.1.2
ESTIMATED HANDLING WEIGHTS
HI-STAR 100 OVERPACK†

Caution:
The maximum weight supported by the HI-STAR 100 overpack lifting trunnions (not including the lift yoke) cannot exceed 250,000 lbs. Users should determine their specific handling weights based on the MPC contents and the expected handling modes.

Note:
The weight of the fuel spacers and the damaged fuel container are less than the weight of the design basis fuel assembly for each MPC and are therefore not included in the maximum handling weight calculations.

Case No.	Load Handling Evolution	Weight (lbs)	
		MPC-24	MPC-68
1	Loaded HI-STAR 100 Overpack Removal from Spent Fuel Pool	242,993	248,024
2	Loaded HI-STAR 100 Overpack Movement to transport device	233,162	238,866
3	Loaded HI-STAR 100 Overpack in Storage	230,922	236,626
4	Loaded HI-STAR 100 on Transport Frame During On-Site Handling	242,662	248,366

† See footnote †††† with Table 8.1.1

Table 8.1.3
HI-STAR 100 SYSTEM TORQUE REQUIREMENTS

Fastener	Torque (ft-lbs)	Pattern
Overpack Closure Plate Bolts†, ††	First Pass – Hand Tight Second Pass – Wrench Tight Third Pass – 700 +50/-50 Fourth Pass – 1400 +100/-100 Final Pass – 2000 +250/-0	Figure 8.1.31
Overpack Vent and Drain Port Cover Plate Bolts††	12+2/-0	X-pattern
Overpack Vent and Drain Port Plugs	45+5/-2	None
Closure Plate Test Port Plug	45 +5/-2	None
Backfill Tool Test Cover Bolts††	16+2/-0	X-pattern
Shear Ring Segment Bolts	22+2/-0	None
Overpack Bottom Cover Bolts	200+20/-0	None
Pocket Trunnion Plugs	Hand Tight	None
Upper Fuel Spacers	Hand Tight	None
Threaded Inserts (all)	Hand Tight	None

† Detorquing shall be performed by turning the bolts counter-clockwise in 1/3 turn +/- 30 degrees increments per pass according to Figure 8.1.31 for three passes. The bolts may then be removed.

†† Bolts shall be cleaned and inspected for damage or excessive wear (replaced if necessary) and coated with a light layer of Fel-Pro Chemical Products, N-5000, Nuclear Grade Lubricant (or equivalent).

Table 8.1.4
HI-STAR 100 SYSTEM ANCILLARY EQUIPMENT OPERATIONAL DESCRIPTION

Equipment	Important To Safety Classification	Reference Figure	Description
Annulus Overpressure System (optional)	Not Important To Safety	8.1.13	The Annulus Overpressure System is used for supplemental protection against spent fuel pool water contamination of the external MPC shell and baseplate surfaces by providing a slight annulus overpressure. The Annulus Overpressure System consists of the quick disconnects water reservoir, reservoir valve and annulus connector hoses. User is responsible for supplying demineralized water to the location of the Annulus Overpressure System.
Annulus Shield (optional)	Not Important To Safety	8.1.12	A shield that is placed at the top of the annulus to provide supplemental shielding to the operators performing cask loading and closure operations. Shield segments are installed by hand, no crane or tools required.
Automated Welding System (optional)	Not Important To Safety	8.1.2b	Used for remote welding of the MPC lid, vent and drain port cover plates and the MPC closure ring. The AWS consists of the robot, wire feed system, torch system, weld power supply and gas lines.
AWS Baseplate Shield (optional)	Not Important To Safety	8.1.2b	The AWS baseplate shield provides supplemental shielding to the operators during the cask closure operations.
Backfill Tool	Not Important to Safety	8.1.24	Used to dry, backfill the HI-STAR 100 annulus and install the HI-STAR 100 overpack vent and drain port plugs. The backfill tool uses the same bolts as the HI-STAR 100 overpack vent and drain cover plates.
Blowdown Supply System	Not Important To Safety	8.1.21	Gas hose with pressure gauge, regulator used for blowdown of the MPC.
Cask Transporter	User designated	8.1.27	Used for handling of the HI-STAR 100 overpack cask around the site. The cask transporter may take the form of heavy haul transfer trailer, special transporter or other equipment specifically designed for such function.
Closure Plate Test Tool	Not Important to Safety	8.1.26	Used to helium leakage test the HI-STAR 100 overpack Closure Plate inner mechanical seal.

Table 8.1.4
HI-STAR 100 SYSTEM ANCILLARY EQUIPMENT OPERATIONAL DESCRIPTION
(continued)

Equipment	Important To Safety Classification	Reference Figure	Description
Cool-Down System	Not Important To Safety	8.3.5	The Cool-Down System is a closed-loop forced ventilation cooling system used to gas-cool the MPC fuel assemblies down to a temperature water can be introduced without the risk of thermally shocking the fuel assemblies or flashing the water, causing uncontrolled pressure transients. The Cool-Down System is attached between the MPC drain and vent ports The CDS consists of the piping, blower, heat exchanger, valves, instrumentation, and connectors. The CDS is used only for unloading operations.
Drain Connector	Not Important To Safety	8.1.13	Used for draining the annulus water following cask closure operations. The Drain Connector consists of the connector pipe valve, and quick disconnect for adapting to the Annulus Overpressure System.
Four Legged Sling and Lifting Rings	Not Important To Safety (controlled under the user's rigging equipment program)	8.1.8	Used for rigging the HI-STAR 100 overpack upper shield lid, MPC lid, AWS Baseplate shield, and Automated Welding System Baseplate Shield. Consists of a four legged sling, lifting rings, shackles and a main lift link.
Helium Backfill System	Not Important To Safety	8.1.23	Used for helium backfilling of the MPC. System consists of the gas lines, mass flow monitor, integrator, and valved quick disconnect.
Hydrostatic Test System	Not Important to Safety	8.1.19	Used to hydrostatically test the MPC primary welds. The hydrostatic test system consists of the gauges, piping, pressure protection system piping and connectors.
Inflatable Annulus Seal	Not Important To Safety	8.1.12	Used to prevent spent fuel pool water from contaminating the external MPC shell and baseplate surfaces during in-pool operations.
Lid Retention System (optional)	User designated	8.1.14	The Lid Retention System provides three functions; it guides the MPC lid into place during underwater installation, establishes lift yoke alignment with the HI-STAR 100 overpack trunnions, and locks the MPC lid in place during cask handling operations between the pool and decontamination pad. The device consists of the retention disk, alignment pins, lift yoke connector links and lift yoke attachment bolts.

Table 8.1.4
HI-STAR 100 SYSTEM ANCILLARY EQUIPMENT OPERATIONAL DESCRIPTION
(continued)

Equipment	Important To Safety Classification	Reference Figure	Description
Lift Yoke	User designated	8.1.3	Used for HI-STAR 100 overpack cask handling when used in conjunction with the overhead crane. The lift yoke consists of the lift yoke assembly and crane hook engagement pin(s). The lift yoke is a modular design that allows inspection, disassembly, maintenance and replacement of components.
MPC Upending Frame	Not Important to Safety	8.1.5	A steel frame used to evenly support the MPC during upending operations.
MSLD (Helium Leakage Detector)	Not Important To Safety	Not shown	Used for helium leakage testing of the MPC closure welds.
Overpack Bottom Cover (optional)	Not Important to Safety	Not shown	A cup-shaped shield used to reduce dose rates around the HI-STAR 100 overpack bottom end when operated in the horizontal orientation.
Overpack Bottom Ring (optional)	Not Important to Safety	Figure 8.1.30	Segmented shield ring that fits under the HI-STAR 100 overpack neutron shield. Used to reduce dose rates around the HI-STAR 100 overpack bottom end.
Overpack Test Cover	Not Important to Safety	8.1.25	Used to helium leakage test the HI-STAR 100 overpack vent and drain port plug seals.
Seal Surface Protector (optional)	Not Important to Safety	8.1.12	Used to protect the HI-STAR 100 overpack mechanical seal seating surface during loading and MPC closure operations.
Temporary Shield Ring (optional)	Not Important To Safety	8.1.17	Fits on the cask neutron shield around the upper forging and provides supplemental shielding to personnel performing cask loading and closure operations.

Table 8.1.4
HI-STAR 100 SYSTEM ANCILLARY EQUIPMENT OPERATIONAL DESCRIPTION
(continued)

Equipment	Important To Safety Classification	Reference Figure	Description
Threaded Inserts	Not Important To Safety	Not shown	Used to fill the empty threaded holes in the HI-STAR 100 overpack and MPC.
Transport Frame (optional)	Not Important To Safety	8.1.4	A frame used to support the HI-STAR 100 overpack during on-site movement and upending/downending operations. The frame consists of the rotation trunnions, main frame beams and front saddle and lift points.
Vacuum Drying System	Not Important To Safety	8.1.22	Used for removal of residual moisture from the MPC and HI-STAR 100 Overpack annulus following water draining. Used for evacuation of the MPC to support backfilling operations. Used to support test volume samples for MPC unloading operations. The VDS consists of the vacuum pump, piping, skid, gauges, valves, inlet filter, flexible hoses, connectors, control system.
Vent and Drain RVOAs	Not Important To Safety	8.1.15	Used to drain, dry, inert and fill the MPC through the vent and drain ports. The vent and drain RVOAs allow the vent and drain ports to be operated like valves and prevent the need to hot tap into the penetrations during unloading operation.
Weld Removal System	Not Important To Safety	8.3.2b	Semi-automated weld removal system used for removal of the MPC to shell weld, MPC to closure ring weld and closure ring to MPC shell weld. The WRS mechanically removes the welds using a high-speed cutter.

Table 8.1.5
HI-STAR 100 SYSTEM INSTRUMENTATION SUMMARY FOR LOADING AND UNLOADING OPERATIONS†

Note:
The following list summarizes the instruments identified in the procedures for cask loading and unloading operations. Alternate instruments are acceptable as long as they can perform appropriate measurements.

Instrument	Function
Dose Rate Monitors/Survey Equipment	Monitors dose rate and contamination levels and ensures proper function of shielding. Ensures assembly debris is not inadvertently removed from the spent fuel pool during overpack removal.
Flow Rate Monitor	Monitors the air flow rate during assembly cool-down.
Helium Mass Flow Monitor (optional)	Determines the amount of helium introduced into the MPC during backfilling operations. Includes integrator.
Helium Mass Spectrometer Leak Detector (MSLD)	Ensures leakage rates of welds are within acceptance criteria.
Helium Pressure Gauges	Ensures correct helium backfill pressure during backfilling operation.
Volumetric Testing Rig	Used to assess the integrity of the MPC lid-to-shell weld.
Pressure Gauge	Ensures correct helium pressure during fuel cool-down operations.
Hydrostatic Test Pressure Gauge	Used for hydrostatic testing of MPC lid-to-shell weld.
Temperature Gauge	Monitors the state of fuel cool-down prior to MPC flooding.
Temperature Probe	For fuel cool-down operations
Vacuum Gauges	Used for vacuum drying operations and to prepare an MPC evacuated sample bottle for MPC gas sampling for unloading operations.
Water Pressure Gauge	Used for performance of the MPC Hydrostatic Test.

† All instruments require calibration. See figures at the end of this section for additional instruments, controllers and piping diagrams.

Table 8.1.6
HI-STAR 100 OVERPACK INSPECTION CHECKLIST

Note:
This checklist provides the basis for establishing a site-specific inspection checklist for the HI-STAR 100 overpack. Specific findings shall be brought to the attention of the appropriate site organizations for assessment, evaluation and potential corrective action prior to use.

HI-STAR 100 Overpack Closure Plate:

1. Lifting rings shall be inspected for general condition and date of required load test certification.
2. The test port shall be inspected for dirt and debris, hole blockage, thread condition, presence or availability of the port plug and replacement mechanical seals.
3. The mechanical seal grooves shall be inspected for cleanliness, dents, scratches and gouges and the presence or availability of replacement mechanical seals.
4. The painted surfaces shall be inspected for corrosion and chipped, cracked or blistered paint.
5. All closure plate surfaces shall be relatively free of dents, scratches, gouges or other damage.
6. The vent port plug shall be inspected for thread condition, and sealing surface condition (scratches, gouges).
7. Overpack vent port shall be inspected for presence or availability of port plugs, hole blockage, plug seal seating surface condition.
8. Overpack vent port cover plate shall be inspected for cleanliness, scratches, dents, and gouges, availability of retention bolts, availability of replacement mechanical seals.

HI-STAR 100 Overpack Main Body:

1. The impact limiter attachment bolt holes shall be inspected for dirt and debris and thread condition.
2. The mechanical seal seating surface shall be inspected for cleanliness, scratches, and dents or gouges.
3. The drain port plug shall be inspected for thread condition, and sealing surface condition (scratches, gouges).
4. The closure plate bolt holes shall be inspected for dirt, debris and thread damage.
5. Painted surfaces shall be inspected for corrosion and chipped, cracked or blistered paint.
6. Trunnions shall be inspected for deformation, cracks, thread damage, end plate damage, corrosion, excessive galling, damage to the locking plate, presence or availability of locking plate and end plate retention bolts.

Table 8.1.6
HI-STAR 100 OVERPACK INSPECTION CHECKLIST
(continued)

7. Pocket trunnion recesses shall be inspected for indications of over stressing (i.e., cracks, deformation, excessive wear).
8. Overpack drain port cover plate shall be inspected for cleanliness, scratches, dents, and gouges, availability of retention bolts, availability of replacement mechanical seals.
9. Overpack drain port shall be inspected for presence or availability of port plug, availability of replacement mechanical seals, hole blockage, plug seal seating surface condition.
10. Annulus inflatable seal groove shall be inspected for cleanliness, scratches, dents, gouges, sharp corners, burrs or any other condition that may damage the inflatable seal.
11. The overpack rupture disks shall be inspected for presence or availability and the top surface of the disk shall be visually inspected for holes, cracks, tears or breakage.
12. The nameplate shall be inspected for presence and general condition.
13. The removable shear ring shall be inspected for fit and thread condition.

Table 8.1.7
MPC RECEIPT INSPECTION CHECKLIST

Note:
This checklist provides the basis for establishing a site-specific inspection checklist for MPC. Specific findings shall be brought to the attention of the appropriate site organizations for assessment, evaluation and potential corrective action prior to use.

MPC Lid and Closure Ring:

1. The MPC lid and closure ring surfaces shall be relatively free of dents, gouges or other shipping damage.
2. The drain line shall be inspected for straightness, thread condition, and blockage.
3. Upper fuel spacers (if used) shall be inspected for availability and general condition. Plugs shall be available for non-used spacer locations.
4. Lower fuel spacers (if used) shall be inspected for availability and general condition.
5. Drain and vent port cover plates shall be inspected for availability and general condition.
6. Serial numbers shall be inspected for readability.

MPC Main Body:

1. All visible MPC body surfaces shall be inspected for dents, gouges or other shipping damage.
2. Fuel cell openings shall be inspected for debris, dents and general condition.
3. Lift lugs shall be inspected for general condition.
4. Verify proper MPC basket type for contents.
5. Inspect drain guide tube for debris, dents and general condition.

8.2 ISFSI OPERATIONS

The HI-STAR 100 System is a totally passive system. Maintenance on the HI-STAR 100 system is typically limited to cleaning and touch-up painting of the HI-STAR 100 overpacks. In the event of significant damage to the HI-STAR 100 System, the situation may warrant removal or unloading of the MPC, and repair or replacement of the damaged HI-STAR 100 overpack. If necessary, the procedures in Section 8.1 may be used to reposition a HI-STAR 100 overpack for minor repairs and maintenance. In extreme cases, Section 8.3 may be used as guidance for unloading the MPC from the HI-STAR 100 overpack. The procedures contained in the HI-STORM FSAR [8.2.1] may be used to transfer the MPC into a HI-STORM overpack or HI-STAR 100 overpack.

8.3 PROCEDURE FOR UNLOADING THE HI-STAR 100 SYSTEM IN THE SPENT FUEL POOL

8.3.1 Overview of HI-STAR 100 System Unloading Operations

ALARA Note:
The procedure described below uses the Weld Removal System, a remotely operated system that mechanically removes the welds. Users may opt to remove some or all of the welds using hand operated equipment. The decision should be based on dose rates, accessibility, degree of weld removal, and available tooling and equipment.

The HI-STAR 100 System unloading procedures describe the general actions necessary to prepare the MPC for unloading, cool the stored fuel assemblies in the MPC, flood the MPC cavity, remove the lid welds, unload the spent fuel assemblies, and recover the HI-STAR 100 overpack and empty MPC. Special precautions are outlined to ensure personnel safety during the unloading operations, and to prevent the risk of MPC over-pressurization and thermal shock to the stored spent fuel assemblies. Figure 8.3.1 shows a flow diagram of the HI-STAR 100 overpack unloading operations. Figure 8.3.2 illustrates the major HI-STAR 100 overpack unloading operations.

Refer to the boxes of Figure 8.3.2 for the following description. The HI-STAR 100 overpack is returned to the fuel building using any of the methodologies as described in Section 8.1 (Box 1). The HI-STAR 100 overpack vent port cover plate is removed and a gas sample is drawn from the HI-STAR 100 overpack annulus to determine the condition of the MPC confinement boundary. The annulus is depressurized and the HI-STAR 100 overpack closure plate is removed (Box 2). The Temporary Shield Ring is installed on the HI-STAR 100 overpack upper section. The Temporary Shield Ring and annulus are filled with plant demineralized water. The annulus and HI-TRAC top surfaces are protected from debris which will be produced when removing the MPC Lid. The MPC closure ring weld is removed using the Weld Removal System. The closure ring above the vent and drain ports and the vent and drain port cover plates are core-drilled and removed to access the vent and drain ports. (Box 3). The design of the vent and drain ports use metal-to-metal seals that prevent rapid decompression of the MPC and subsequent spread of contamination during unloading. The vent port RVOA is attached to the vent port and an evacuated sample bottle is connected. The vent port is opened slightly to allow the sample bottle to obtain a gas sample from inside the MPC. A gas sample is performed to assess the condition of the fuel assembly cladding. The MPC is cooled using a closed-loop heat exchanger to reduce the MPC internal temperature to allow water flooding (Box 4). The cool-down process gradually reduces the cladding temperature to a point where the MPC may be flooded with water without thermally shocking the fuel assemblies or causing uncontrolled pressure transients in the MPC from the formation of steam. Following the fuel cool-down, the MPC is filled with water at a specified rate (Box 5). The Weld Removal System then removes both the closure ring-to-MPC shell weld and the MPC lid to MPC shell welds. The Weld Removal System is removed with the MPC lid left in place (Box 6).

The top surfaces of the HI-STAR 100 overpack and MPC are cleared of metal shavings. The annulus shield is removed and the inflatable annulus seal is installed and pressurized. The MPC

lid is rigged to the lift yoke or Lid Retention System and the lift yoke is engaged to the HI-STAR 100 overpack lifting trunnions. The HI-STAR 100 overpack is placed in the spent fuel pool and the MPC lid is removed (Box 7). All fuel assemblies are returned to the spent fuel storage racks (Box 8) and the MPC fuel cells are vacuumed to remove any assembly debris and crud. The HI-STAR 100 overpack and MPC are returned to the designated preparation area (Box 9) where the MPC water is pumped back into the spent fuel pool or liquid radwaste facility. The annulus water is drained and the MPC and overpack are decontaminated (Box 10 and 11).

8.3.2 HI-STAR 100 Overpack Recovery from Storage

1. Transfer the HI-STAR 100 overpack to the fuel building. The same methods may be used as was performed in the original cask placement operations. See Section 8.1.

2. Position the HI-STAR 100 overpack under the lifting device.

3. Place the HI-STAR 100 overpack in the designated preparation area.

ALARA Warning:
Gas sampling is performed to assess the condition of the MPC confinement boundary. If a leak is discovered in the MPC boundary, the user's Radiation Control organization may require special actions to vent the HI-STAR 100.

4. Perform annulus gas sampling as follows:

   a. Remove the overpack vent port cover plate and attach the backfill tool with a sample bottle attached. See Figure 8.3.3. Store the cover plate in a site-approved location.

   b. Using a vacuum pump, evacuate the sample bottle and backfill tool.

   c. Slowly open the vent port plug and gather a gas sample from the annulus. Reinstall the HI-STAR 100 overpack vent port plug.

   d. Evaluate the gas sample and determine the condition of the MPC confinement boundary.

5. If the confinement boundary is intact (i.e., no radioactive gas is measured) then vent the overpack annulus by removing the overpack vent port seal plug (using the backfill tool). Otherwise vent the annulus gas in accordance with instructions from Radiation Protection.

6. Remove the closure plate bolts. Store the closure plate bolts in a site-approved location.

7. Remove the overpack closure plate. See Figure 8.1.8 for rigging. Store the closure plate on cribbing to protect the seal seating surfaces.

8. Install the HI-STAR 100 overpack Seal Surface Protector (See Figure 8.1.12).

Warning:
Annulus fill water may flash to steam due to high MPC shell temperatures. Water addition should be performed in a slow and controlled manner.

9. Remove the HI-STAR 100 overpack drain port cover and port plug and install the drain connector. Store the drain port cover plate and port plug in an approved storage location.

10. Slowly fill the annulus area with plant demineralized water to approximately 4 inches below the top of the MPC shell and install the annulus shield. Cover annulus & HI-TRAC top surfaces to protect them from debris produced when removing the MPC Lid. See Figure 8.1.12.

11. Remove the MPC closure welds as follows:

ALARA Note:
The following procedures describe weld removal using the Weld Removal System. The Weld Removal System removes the welds with a high speed machine tool head. A vacuum head is attached to remove a majority of the metal shavings. Other methods of opening the MPC are acceptable.

ALARA Warning:
Weld removal may create an airborne radiation condition. Weld removal must be performed under the direction of the user's Radiation Protection organization.

a. Install bolt plugs and/or waterproof tape on the closure plate bolt holes.

b. Install the Weld Removal System on the MPC lid and core drill through the closure ring and vent and drain port cover plate welds.

c. Deleted

12. Access the vent and drain ports.

ALARA Note:
The MPC vent and drain ports are equipped with metal-to-metal seals to minimize leakage and withstand the long-term effects of temperature and radiation. The vent and drain port design prevents the need to hot tap into the penetrations during unloading operation and eliminate the risk of a pressurized release of gas from the MPC.

13. Take an MPC gas sample as follows:

a. Attach the RVOA to the vent port (See Figure 8.1.15).

b. Attach a sample bottle to the vent port RVOA as shown on Figure 8.3.4.

c. Using the Vacuum Drying System, evacuate the RVOA and Sample Bottle.

d. Slowly open the vent port cap using the RVOA and gather a gas sample from the MPC internal atmosphere.

e. Close the vent port cap and disconnect the sample bottle.

ALARA Note:

The gas sample analysis is performed to determine the condition of the fuel cladding in the MPC. The gas sample may indicate that fuel with damaged cladding is present in the MPC. The results of the gas sample test may affect personnel protection and how the gas is processed during MPC depressurization.

f. Turn the sample bottle over to the site's Radiation Protection or Chemistry Department for analysis.

g. Install the RVOA in the drain port.

14. Perform Fuel Assembly Cool-Down as follows:

a. Configure the Cool-Down System as shown on Figure 8.3.5.

b. Verify that the helium gas pressure regulator is set to the appropriate pressure.

c. Open the helium gas supply valve to purge the gas lines of air.

d. Deleted.

e. If necessary, slowly open the helium supply valve and increase the Cool-Down System pressure to MPC pressure. Close the helium supply valve.

f. Start the gas coolers.

g. Open the vent and drain port caps using the RVOAs.

h. Start the blower and monitor the gas exit temperature. Continue the fuel cool-down operations until the gas exit temperature meets the requirements of LCO *2.1.4*.

Note:

Water filling should commence immediately after the completion of fuel cool-down operations to minimize fuel assembly heat-up. Prepare the water fill and vent lines in advance of water filling.

i. Prepare the MPC fill and vent lines as shown on Figure 8.1.19. Route the vent port line several feet below the spent fuel pool surface or to the radwaste gas facility. Turn off the blower and disconnect the gas lines to the vent and drain port RVOAs. Attach the vent line to the MPC vent port and slowly open the vent line valve to depressurize the MPC.

j. Attach the water fill line to the MPC drain port and slowly open the water supply valve and establish a pressure less than 90 psi. Fill the MPC until bubbling from the vent line has terminated. Close the water supply valve on completion.

Caution:

Oxidation of Boral panels contained in the MPC may create hydrogen gas while the MPC is filled with water. Appropriate monitoring for combustible gas concentrations shall be performed prior to, and during MPC cutting operations. The space below the MPC lid shall be exhausted or purged with inert gas prior to, and during MPC cutting operations to provide additional assurance that flammable gas concentrations will not develop in this space.

k. Disconnect both lines from the drain and vent ports and, connect a combustible gas monitor to the MPC vent port and check for combustible gas concentrations prior to and periodically during weld removal activities. Purge or evacuate the gas space under the lid as necessary.

l. Remove the closure ring-to-MPC shell weld and the MPC lid-to-shell weld using the Weld Removal System and remove the Weld Removal System. See Figure 8.1.8 for rigging.

m. Vacuum the top surfaces of the MPC and the HI-STAR 100 overpack to remove any metal shavings.

15. Install the inflatable annulus seal as follows:

Caution:
Do not use any sharp tools or instruments to install the inflatable seal.

a. Remove the annulus shield.

b. Manually insert the inflatable seal around the MPC. See Figure 8.1.12.

c. Ensure that the seal is uniformly positioned in the annulus area.

d. Inflate the seal.

e. Visually inspect the seal to ensure that it is properly seated in the annulus. Deflate, adjust and inflate the seal as necessary.

16. Place HI-STAR 100 overpack in the spent fuel pool as follows:

a. Engage the lift yoke to the HI-STAR 100 overpack lifting trunnions, remove the MPC lid lifting threaded inserts and attach the MPC lid slings or Lid Retention System to the MPC lid.

b. If the Lid Retention System is used, inspect the lid bolts for general condition. Replace worn or damaged bolts with new bolts.

c. Install the Lid Retention System bolts if the Lid Retention System is used.

ALARA Note:
The optional Annulus Overpressure System is used to provide additional protection against MPC external shell contamination during in-pool operations.

d. If used, fill the Annulus Overpressure System lines and reservoir with demineralized water and close the reservoir valve. Attach the Annulus Overpressure System to the HI-STAR 100 overpack. See Figure 8.1.13.

Warning:
Cask placement in the spent fuel pool is the heaviest lift that occurs during the HI-STAR 100 unloading operations. The HI-STAR 100 trunnions must not be subjected to lifted loads in excess of 250,000 lbs. Users may elect to pump a measured quantity of water from the MPC prior to placement of the HI-STAR 100 in the spent fuel pool. See Table 8.1.1 and 8.1.2 for weight information.

e. Position the HI-STAR 100 overpack over the cask loading area with the basket aligned to the orientation of the spent fuel racks.

ALARA Note:
Wetting the components that enter the spent fuel pool may reduce the amount of decontamination work to be performed later.

f. Wet the surfaces of the HI-STAR 100 overpack and lift yoke with plant demineralized water while slowly lowering the HI-STAR 100 overpack into the spent fuel pool.

g. When the top of the HI-STAR 100 overpack reaches the approximate elevation of the reservoir, open the Annulus Overpressure System reservoir valve. Maintain the reservoir water level at approximately 3/4 full the entire time the cask is in the spent fuel pool.

h. If the Lid Retention System is used, remove the lid retention bolts when the top of the HI-STAR 100 overpack is accessible from the operating floor.

i. Place the HI-STAR 100 overpack on the floor of the cask loading area and disengage the lift yoke. Visually verify that the lift yoke is fully disengaged.

j. Apply slight tension to the lift yoke and visually verify proper disengagement of the lift yoke from the trunnions.

k. Remove the lift yoke, MPC lid and drain line from the pool in accordance with directions from the site's Radiation Protection personnel. Spray the equipment with demineralized water as they are removed from the pool.

Warning:
The MPC lid and unloaded MPC may contain residual contamination. All work done on the unloaded MPC should be carefully monitored and performed.

l. Disconnect the drain line from the MPC lid.

m. Store the MPC lid components in an approved location. Disengage the lift yoke from MPC lid. Remove any upper fuel spacers using the same process as was used in the installation.

n. Disconnect the Lid Retention System if used.

8.3.3 MPC Unloading

1. Remove the spent fuel assemblies from the MPC using applicable site procedures.

2. Vacuum the cells of the MPC to remove any debris or corrosion products.

3. Inspect the open cells for presence of any remaining items. Remove them as appropriate.

8.3.4 Post-Unloading Operations

1. Remove the HI-STAR 100 overpack and the unloaded MPC from the spent fuel pool as follows:

a. Engage the lift yoke to the top trunnions.

b. Apply slight tension to the lift yoke and visually verify proper engagement of the lift yoke to the trunnions.

c. Raise the HI-STAR 100 overpack until the HI-STAR 100 overpack flange is at the surface of the spent fuel pool.

ALARA Warning:
Activated debris may have settled on the top face of the HI-STAR 100 overpack during fuel unloading.

d. Measure the dose rates at the top of the HI-STAR 100 overpack in accordance with plant radiological procedures and flush or wash the top surfaces to remove any highly-radioactive particles.

e. Raise the top of the HI-STAR 100 overpack and MPC to the level of the spent fuel pool deck.

f. Close the Annulus Overpressure System reservoir valve if the Annulus Overpressure System was used.

g. Using a water pump, lower the water level in the MPC approximately 12 inches to prevent splashing during cask movement.

ALARA Note:
To reduce contamination of the HI-STAR 100 overpack, the surfaces of the HI-STAR 100 overpack and lift yoke should be kept wet until decontamination can begin.

h. Remove the HI-STAR 100 overpack from the spent fuel pool while spraying the surfaces with plant demineralized water.

i. Disconnect the Annulus Overpressure System from the HI-STAR 100 overpack via the quick disconnect. Drain the Annulus Overpressure System lines and reservoir.

j. Place the HI-STAR 100 overpack in the designated preparation area.

k. Disengage the lift yoke.

l. Perform decontamination on the HI-STAR 100 overpack and the lift yoke.

2. Carefully decontaminate the area above the inflatable seal. Deflate, remove, and store the seal in an approved plant storage location.

3. Using a water pump, pump the remaining water in the MPC to the spent fuel pool or liquid radwaste system.

4. Drain the water in the annulus.

5. Remove the MPC from the HI-STAR 100 overpack and decontaminate the MPC as necessary.

6. Decontaminate the HI-STAR 100 overpack.

7. Remove any bolt plugs, seal surface protector and/or waterproof tape from the HI-STAR 100 overpack top bolt holes.

8. Move the HI-STAR 100 overpack and MPC for further inspection, corrective actions, or disposal as necessary.

8.4 PLACEMENT OF THE HI-STAR 100 SYSTEM INTO STORAGE DIRECTLY FROM TRANSPORT

8.4.1 Overview of the HI-STAR 100 System Placement Operations Directly From Transport

The placement operations following transport of the overpack are similar to the later part of the loading operations detailed in Section 8.1. The overpack is received and surveyed for dose rates in accordance with 10CFR20 [8.4.1] and 10CFR49.173 to 177 [8.4.2]. The overpack is surveyed for removable contamination. The overpack may be transferred horizontally or vertically depending on the site specific requirements.

8.4.2 Storage Operations from Transport

1. Survey the overpack for dose rates (LCO 2.2.1).

2. Survey the overpack for removable contamination and decontaminate as necessary (LCO 2.2.2).

3. Transfer the overpack to the ISFSI.

Note:
The HI-STAR 100 minimum pitch shall be 12 feet (nominal).

4. Place the overpack at the approved storage location at the appropriate pitch.

5. Continue operations in accordance with Section 8.2.

8.5 REGULATORY ASSESSMENT

- The HI-STAR 100 System is compatible with wet and dry loading and unloading. General procedure descriptions for these operations are summarized in Sections 8.1 and 8.3 of the Topical Safety Analysis Report. Detailed procedures will need to be developed and evaluated on a site-specific basis.

- The bolted closure plate and welded MPC of the HI-STAR 100 System allow retrieval of the spent fuel for further processing or disposal as required.

- The smooth surfaces of the HI-STAR 100 System and its ancillary equipment are designed to facilitate decontamination. Only routine decontamination will be necessary after the HI-STAR 100 overpack is removed from the spent fuel pool.

- No significant radioactive effluents are produced during storage. Any radioactive effluents generated during the cask loading will be governed by the 10CFR Part 50 license conditions, if applicable.

- The general operating procedures described in the FSAR are adequate to protect health and minimize danger to life and property. Detailed procedures will need to be developed and evaluated on a site-specific basis.

- The operating procedures in the FSAR provide reasonable assurance that the HI-STAR 100 System will enable safe storage of spent fuel.

8.6 REFERENCES

[8.0.1] U.S. Nuclear Regulatory Commission, "Standard Review Plan for Dry Cask Storage Systems", NUREG-1536, Final Report, January 1997.

[8.0.2] *U.S. Code of Federal Regulations,* Title 10, "Energy", Part 72, "Licensing Requirements for Independent Storage of Spent Nuclear Fuel and High-Level Radioactive Waste."

[8.0.3] American National Standard for Special Lifting Devices for Shipping Containers Weighing 10 000 Pounds (4500 KG) or More for Nuclear Materials, ANSI N14.6, 1993.

[8.0.4] U.S. Nuclear Regulatory Commission, "Control of Heavy Loads at Nuclear Power Plants," NUREG-0612.

[8.1.2] American National Standards Institute, Institute for Nuclear Materials Management, "American National Standard for Radioactive Materials – Leakage Tests on Packages for Shipment," ANSI N14.5-1997.

[8.2.1] Holtec International, "Topical Safety Analysis Report for the HI-STORM 100 System", Report HI-951312, latest revision.

[8.4.1] *U.S. Code of Federal Regulations,* Title 10, "Energy", Part 20, "Standards for Protection Against Radiation."

[8.4.2] *U.S. Code of Federal Regulations,* Title 49, "Transportation", Part 173, "Shippers – General Requirements for Shipments and Packages."

CHAPTER 9: ACCEPTANCE CRITERIA AND MAINTENANCE PROGRAM

This chapter identifies the fabrication, inspection, test, and maintenance programs to be conducted on the HI-STAR 100 System to verify that the structures, systems and components (SSCs) classified as important to safety have been fabricated, assembled, inspected, tested, accepted, and maintained in accordance with the requirements set forth in this FSAR, the applicable regulatory requirements, and the Certificate of Compliance.

The controls, inspections, and tests set forth in this chapter, in conjunction with the design requirements described in previous chapters, shall ensure that the HI-STAR 100 System will maintain confinement of radioactive material under normal, off-normal, and credible accident conditions; will maintain subcriticality control; will properly transfer the decay heat of the stored radioactive materials; and that radiation doses will meet regulatory requirements.

Both pre-operational and operational tests and inspections are performed throughout HI-STAR 100 loading operations to assure that the HI-STAR 100 System is functioning within its design parameters. These include receipt inspections, nondestructive weld inspections, hydrostatic tests, radiation shielding tests, thermal performance tests, dryness tests, and others. Chapter 8 identifies the sequence and conduct of the tests and inspections. "Pre-operation", as referred to in this section, defines that period of time from receipt inspection of a HI-STAR 100 System until the empty MPC is loaded into a HI-STAR overpack for fuel assembly loading.

The HI-STAR 100 System is classified as important to safety. Therefore, the individual structures, systems, and components (SSCs) that make up the HI-STAR 100 System shall be designed, fabricated, assembled, inspected, tested, accepted, and maintained in accordance with a quality program commensurate with the particular SSC's graded quality category. Tables 2.2.6 and 8.1.4 provide the quality category for each major item or component of the HI-STAR 100 System and required ancillary equipment and systems.

The acceptance criteria and maintenance program described in this chapter fully comply with the requirements of 10CFR Part 72 [9.0.1] and NUREG-1536 [9.0.2], except as clarified in Table 1.0.3.

9.1 ACCEPTANCE CRITERIA

This section provides the workmanship inspections and acceptance tests to be performed on the HI-STAR 100 System prior to or during first loading of the system. These inspections and tests provide assurance that the HI-STAR 100 System has been fabricated, assembled, inspected, tested, and accepted for use and loading under the conditions specified in this FSAR and the Certificate of Compliance issued by the NRC in accordance with the requirements of 10CFR Part 72 [9.0.1].

These inspections and tests are also intended to demonstrate that the initial operation of the HI-STAR 100 System complies with the applicable regulatory requirements and the Technical Specifications. Noncompliances encountered during the required inspections and tests will be corrected or dispositioned to bring the item into compliance with this FSAR. Identification and resolution of noncompliances will be performed in accordance with the Holtec International Quality Assurance Program as described in Chapter 13 of this FSAR, or the licensee's NRC-approved

Quality Assurance Program. The testing and inspection acceptance criteria applicable to the MPCs and the HI-STAR overpack are listed in Tables 9.1.1 and 9.1.2, respectively, and discussed in more detail in the sections that follow, and in Chapters 8 and 12. These inspections and tests are intended to demonstrate that the HI-STAR 100 System has been fabricated, assembled, and examined in accordance with the design criteria contained in Chapter 2 of this FSAR.

This section summarizes the test program established for the HI-STAR 100 System.

9.1.1 Fabrication and Nondestructive Examination (NDE

The design, fabrication, inspection, and testing of the HI-STAR 100 System is performed in accordance with applicable codes and standards specified in Tables 2.2.6 and 2.2.7. Additional details on specific codes used are provided below.

The following fabrication controls and required inspections shall be performed on the HI-STAR 100 System, including the MPCs, in order to assure compliance to this FSAR and the Certificate of Compliance.

1. Materials of construction specified for the HI-STAR 100 System are identified in the drawing Bills-of-Material in Chapter 1 and will be procured with certification and supporting documentation as required by ASME Code [9.1.1] Section II (when applicable); the applicable subsection of ASME Code Section III (when applicable); Holtec procurement specifications; and 10CFR72, Subpart G. All materials and components will be receipt inspected for visual and dimensional acceptability, material conformance to specification requirements, and traceability markings, as applicable. Controls shall be in place to assure material traceability is maintained throughout fabrication. Materials for the confinement boundary (MPC baseplate, lid, closure ring, port cover plates and shell) and the HI-STAR 100 System helium retention boundary (bottom plate, inner shell, top flange, vent and drain port plugs, closure plate, and closure plate bolts) (equivalent to the HI-STAR 100 System containment boundary in 10CFR71 [9.1.2] transport operations) shall also be inspected per the requirements of ASME Section III, Article NB-2500.

2. The MPC confinement boundary and HI-STAR 100 System helium retention boundary shall be fabricated and inspected in accordance with ASME Code Section III, Subsection NB to the maximum extent practicable (see exceptions in Chapter 2). Other portions of the HI-STAR 100 overpack shall be fabricated and inspected in accordance with ASME Code Section III, Subsection NF (see exceptions in Chapter 2). The MPC basket, basket supports, and fuel spacers shall be fabricated and inspected in accordance with ASME Code Section III, Subsection NG (see exceptions in Chapter 2).

3. Welding shall be performed using welders and weld procedures that have been qualified in accordance with ASME Code Section IX and the applicable ASME Section III Subsections (e.g., NB, NG, or NF, as applicable to the SSC).

4. All welds shall be visually examined in accordance with ASME Code Section V, Article 9 with acceptance criteria per ASME Code Section III, Subsection NF, Article NF-5360, except the MPC fuel basket cell plate-to-cell plate welds, fuel basket support-to-canister welds, and fuel spacer welds which shall have acceptance criteria to ASME Code Section III, Subsection NG, Article NG-5360, except as modified by the design drawings. Table 9.1.3 identifies additional nondestructive examination (NDE) requirements to be performed on specific welds, and the applicable codes and acceptance criteria to be used in order to meet the inspection requirements of the applicable ASME Code Section III. Acceptance criteria for all NDE shall be in accordance with the applicable Code for which the item was fabricated, except as modified by the design drawings. These additional NDE criteria are also specified in the design drawings for the specific welds. Weld inspections shall be detailed in a weld inspection plan which shall identify the weld and the examination requirements, the sequence of examination, and the acceptance criteria. The inspection plan shall be reviewed and approved by Holtec International in accordance with its QA program. NDE inspections shall be performed in accordance with written and approved procedures by personnel qualified in accordance with SNT-TC-1A [9.1.3] or other site-specific, NRC-approved program for personnel qualification.

5. The MPC confinement boundary and the HI-STAR overpack helium retention boundary shall be examined and tested by a combination of methods (including helium leak test, pressure test, UT, MT and/or PT, as applicable) to verify that it is free of cracks, pinholes, uncontrolled voids or other defects that could significantly reduce its confinement effectiveness.

6. Any welds requiring weld repair shall be repaired in accordance with the requirements of the ASME Code Section III, Article NB-4450, NG-4450, or NF-4450, as applicable to the SSC, and examined after repair in the same manner as the original weld.

7. Any base metal repairs shall be performed and examined in accordance with the applicable fabrication Code.

8. Grinding and machining operations of the MPC confinement boundary and HI-STAR 100 helium retention boundary shall be controlled through written and approved procedures and quality assurance oversight to ensure grinding and machining operations do not reduce base metal wall thicknesses of the confinement or helium retention boundaries beyond that allowed per the design drawings. The thicknesses of base metals shall be ultrasonically tested, as necessary, in accordance with written and approved procedures to verify base metal thickness meets Design Drawing requirements. A nonconformance shall be written for areas found to be below

allowable base metal thickness and shall be evaluated and repaired as necessary per the ASME Code Section III, Subsection NB requirements.

9. Dimensional inspections of the HI-STAR 100 System shall be performed in accordance with written and approved procedures in order to verify compliance to design drawings and fit up of individual components. All dimensional inspections and functional fit-up tests shall be documented.

10. All required inspections shall be documented. The inspection documentation shall become part of the final quality documentation package.

11. The HI-STAR 100 System shall be inspected for cleanliness and proper packaging for shipping in accordance with written and approved procedures.

12. Each HI-STAR overpack will be durably marked with the appropriate model number, a unique identification number, and its empty weight per 10CFR72.236(k) at the completion of the acceptance test program.

13. Each HI-STAR overpack will be durably marked with COC identification number assigned by the NRC, radioactive trefoil symbol, gross weight, model number, and unique identification serial number in accordance with 10CFR71.85(c) at the completion of the acceptance test program performed in accordance with Chapter 8 of the HI-STAR 100 SAR (HI-951251) [9.1.4] (Reference NRC Docket No. 71-9261).

14. A completed documentation package shall be prepared and maintained during fabrication of each HI-STAR 100 System to include detailed records and evidence that the required inspections and tests have been performed. The document package will be reviewed to verify that the HI-STAR 100 System or component has been properly fabricated and inspected in accordance with the design and Code construction requirements. The documentation package shall include, but not be limited to:

    - Completed Weld Records
    - Inspection Records
    - Nonconformance Reports
    - Material Test Reports
    - NDE Reports
    - Dimensional Inspection Reports

9.1.1.1 MPC Lid-to-Shell Weld Volumetric Inspection

1. The MPC lid-to-shell (LTS) weld shall be volumetrically or multi-layer liquid penetrant (PT) examined following completion of welding. If volumetric examination is used, the ultrasonic testing (UT) method shall be employed. Ultrasonic techniques (including, as appropriate, Time-of-Flight

Diffraction, Focused Phased Array, and conventional pulse-echo) shall be supplemented, as necessary, to ensure substantially complete coverage of the examination volume.

2. If volumetric examination is used, then PT examinations of the root and final passes of the LTS weld shall be performed and unacceptable indications shall be documented, repaired and re-examined.

3. If volumetric examination is not used, a multi-layer PT examination shall be performed. The multi-layer PT must, at a minimum, include the root and final layers and one intermediate PT after each approximately 3/8 inch of weld depth has been completed. The 3/8 inch weld depth corresponds to the maximum allowable flaw size in the weld [9.1.10].

4. The overall minimum thickness of the LTS weld has been increased by 0.125 inch over the size credited in structural analyses, to provide additional structural capacity. A 0.625-inch J-groove weld was assumed in the structural analyses in Chapter 3.

5. For either UT or PT, the maximum undetectable flaw size must be demonstrated to be less than the critical flaw size. The critical flaw size must be determined in accordance with ASME Section XI methods. The critical flaw size shall not cause the primary stress limits of NB-3000 to be exceeded. The inspection process, including findings (indications) shall be made a permanent part of the cask user's records by video, photographic, or other means which provide an equivalent retrievable record of weld integrity. The video or photographic records should be taken during the final interpretation period described in ASME Section V, Article 6, T-676. The inspection of the weld shall be performed by qualified personnel and shall meet the acceptance requirements of ASME Section III, NB-5350 for PT and NB-5332 for UT.

6. Evaluation of any indications identified by non-destructive examination shall include consideration of any active flaw mechanisms. However, cyclic loading on the LTS weld is not significant, so fatigue will not be a factor. The LTS weld is protected from the external environment by the closure ring and the root of the LTS weld is dry and inert (He atmosphere), so stress corrosion cracking will not be a concern for the LTS weld.

7. The volumetric or multi-layer PT examination of the LTS weld, in conjunction with other examinations performed on this weld (PT of root and final layer, hydrostatic test, and a helium leakage test); the use of ASME Section III acceptance criteria, and the additional weld material added to account for potential defects in the root pass of the weld, in total, provide reasonable assurance that the LTS weld is sound and will perform its design function under all loading conditions. The volumetric (or multi-layer PT) examination and evaluation of indications will provide reasonable assurance

that leakage of the weld or structural failure under the design basis normal, off-normal, or accident storage loading conditions will not occur.

9.1.2 Structural and Pressure Tests

9.1.2.1 Lifting Trunnions

Two trunnions (located near the top of the HI-STAR overpack) are provided for vertical lifting and handling of the HI-STAR 100 System. The trunnions are designed in accordance with ANSI N14.6 [9.1.5] using a high-strength and high-ductility material (see Chapter 1). The trunnion contains no welded components. The maximum design lifting load of 250,000 pounds for the HI-STAR 100 System will occur during the removal of the HI-STAR overpack from the spent fuel pool after the MPC has been loaded, flooded with water, and the MPC lid is installed. The high material ductility, absence of materials vulnerable to brittle fracture, large stress margins, and a carefully engineered design to eliminate local stress raisers in the highly stressed regions (during the lift operation) ensure that the lifting trunnions will work reliably. However, pursuant to the defense-in-depth approach of NUREG-0612 [9.1.6], the acceptance criteria for the lifting trunnions must be established in conjunction with other considerations applicable to heavy load handling.

Section 5 of NUREG-0612 calls for measures to "provide an adequate defense-in-depth for handling of heavy loads...". The NUREG-0612 guidelines cite four major causes of load handling accidents, of which rigging failure (including trunnion failure) is one:

i. operator errors
ii. rigging failure
iii. lack of adequate inspection
iv. inadequate procedures

The cask loading and handling operations program shall ensure maximum emphasis to mitigate the potential of load drop accidents by implementing measures to eliminate shortcomings in all aspects of the operation including the four aforementioned areas.

In order to ensure that the lifting trunnions do not have any hidden material flaws, the trunnions shall be tested at 300% of the maximum design (service) lifting load. The load (750,000 lbs) shall be applied for a minimum of 10 minutes. The accessible parts of the trunnions (areas outside the HI-STAR overpack), and the local HI-STAR 100 cask areas will then be visually examined to verify no deformation, distortion, or cracking has occurred. Any evidence of deformation, distortion or cracking of the trunnion or adjacent HI-STAR 100 cask areas will require replacement of the trunnion and/or repair of the HI-STAR 100 cask. Following any replacements and/or repair, the load testing shall be reperformed and the components re-examined in accordance with the original procedure and acceptance criteria. Testing will be performed in accordance with written and approved procedures. Certified material test reports verifying trunnion material mechanical properties meet ASME Code Section II requirements will provide further verification of the trunnion load capabilities. Test results shall be documented. The documentation shall become part of the final quality documentation package.

The acceptance testing of the trunnions in the manner described above will provide adequate assurance against handling accidents.

9.1.2.2 Pressure Testing

9.1.2.2.1 HI-STAR 100 Helium Retention Boundary

The helium retention boundary of the HI-STAR overpack (e.g., the containment boundary during transportation) will be hydrostatically or pneumatically pressure tested to 150 psig +10,-0 psig, in accordance with the requirements of the ASME Code Section III, Subsection NB, Article NB-6000. The test pressure of 150 psig is 150% of the Maximum Normal Operating Pressure (established per 10CFR71.85(b) requirements). This bounds the ASME Code Section III requirement (NB-6221) for hydrostatic testing to 125% of the design pressure (100 psig). The test shall be performed in accordance with written and approved procedures. The approved test procedure shall clearly define the test equipment arrangement.

The overpack pressure test may be performed at any time during fabrication after the containment boundary is complete. Preferably, the pressure test should be performed after all overpack fabrication is complete, including attachment of the intermediate shells. The HI-STAR overpack shall be assembled for this test with the closure plate mechanical seal (only one required) or temporary test seal installed. Closure bolts shall be installed and torqued to an appropriate value less than or equal to the value specified in Chapter 8.

The calibrated test pressure gage installed on the overpack shall have an upper limit of approximately twice that of the test pressure. The test pressure shall be maintained for ten minutes. During this time period, the pressure gage shall not fall below 150 psig. At the end of ten minutes, and while the pressure is being maintained at a minimum of 150 psig, the overpack shall be observed for leakage. In particular, the closure plate-to-top forging joint (the only credible leakage point) shall be examined. If a leak is discovered, the overpack will be emptied and an evaluation to determine the cause of the leakage will be made. Repairs and retest shall be performed until the pressure test criteria are met.

Note: If failure of the pressure retest occurs after initial repairs are completed, a nonconformance report shall be issued and root cause and corrective action shall be addressed before further repairs and retest are performed.

After completion of the pressure testing, the closure plate will be removed and the internal surfaces shall be visually examined for cracking or deformation. Any evidence of cracking or deformation shall be cause for rejection or repair and retest, as applicable. The overpack shall be required to be

pressure tested until all examinations are found to be acceptable. All test results shall be documented and shall become part of the final quality documentation package.

9.1.2.2.2 MPC Confinement Boundary

Hydrostatic testing of the MPC confinement boundary shall be performed in accordance with the

requirements of the ASME Code Section III, Subsection NB, Article NB-6000, when field welding of the MPC lid-to-shell weld is completed. The hydrostatic pressure for the test is 125 +5,-0 psig, which is 125% of the design pressure of 100 psig. The MPC vent and drain ports will be used for pressurizing the MPC cavity. The loading procedures in Chapter 8 define the test equipment arrangement. The calibrated test pressure gage installed on the MPC confinement boundary shall have an upper limit of approximately twice that of the test pressure. Following completion of the 10-minute hold period at the hydrostatic test pressure, and while maintaining a minimum test pressure of 125 psig, the surface of the MPC lid-to-shell weld will be visually examined for leakage and then re- examined by dye penetrant examination. Any evidence of cracking or deformation shall be cause for rejection, or repair and retest, as applicable. The performance and sequence of the test and the acceptance criteria are described in Section 8.1 (loading procedures).

If a leak is discovered, the test pressure shall be reduced, the MPC cavity water level lowered, the MPC cavity vented, and the weld shall be examined to determine the cause of the leakage and/or cracking. Repairs to the weld shall be performed in accordance with approved written procedures prepared in accordance with the ASME Code Section III, Subsection NB, NB-4450.

The MPC confinement boundary hydrostatic test shall be repeated until all visual and dye penetrant examinations are found to be acceptable in accordance with the acceptance criteria. All test results shall be documented and shall be maintained as part of the loaded MPC quality documentation package.

9.1.2.3 Materials Testing

The majority of material used in the HI-STAR overpack are ferritic steels. ASME Code Section III and Regulatory Guides 7.11 [9.1.7] and 7.12 [9.1.8] require that certain materials be tested in order to assure that these materials are not subject to brittle fracture failures.

Each plate or forging for the helium retention boundary (overpack inner shell, bottom plate, top flange, and closure plate) shall be required to be drop weight tested in accordance with the requirements of Regulatory Guides 7.11 and 7.12, as applicable. Additionally, per the ASME Code Section III, Subsection NB, Article NB-2300, Charpy V-notch testing shall be performed on these materials. Weld material used in welding the helium retention boundary shall be Charpy V-notch tested in accordance with ASME Section III, Subsection NB, Articles NB-2300 and NB-2430.

Non-helium retention boundary portions of the overpack, as required, shall be Charpy V-notch tested in accordance with ASME Section III, Subsection NF, Articles NF-2300, and NF-2430. The non-helium retention boundary materials to be tested include the intermediate shells, overpack port cover plates, and applicable weld materials.

Section 3.1 provides the test temperatures or T_{NDT}, and test requirements to be used when performing the testing specified above.

All test results shall be documented and shall become part of the final quality documentation package.

9.1.2.4 Pneumatic Testing of the Neutron Shield Enclosure Vessel

A pneumatic pressure test of the neutron shield enclosure vessel will be performed following final closure welding of the enclosure shell returns and enclosure panels. The pneumatic test pressure shall be 37.5+2.5,-0 psig, which is 125 percent of the rupture disc relief set pressure. The test shall be performed in accordance with approved written procedures.

During the test, the two rupture discs on the neutron shield enclosure vessel will be removed. One of the rupture disc threaded connections will be used for connection of the air pressure line and the other rupture disc connection will be used for connection of the pressure gauge.

Following introduction of pressurized air into the neutron shield enclosure vessel, a 10 minute pressure hold time will be required. If the neutron shield enclosure vessel fails to hold pressure, an approved soap bubble solution will be applied to determine the location of the leak. The leak shall be repaired using weld repair procedures in accordance with the ASME Code Section III, Subsection NF, Article NF-4450. The pneumatic pressure test shall be re-performed until no pressure loss is observed.

All test results shall be documented and shall become part of the final quality documentation package.

9.1.3 Leakage Testing

Leakage testing shall be performed in accordance with the requirements of ANSI N14.5 [9.1.9]. Testing shall be performed in accordance with written and approved procedures.

9.1.3.1 HI-STAR Overpack

A helium retention boundary weld leakage test shall be performed at any time after the containment boundary fabrication is complete. Preferably, this test should be performed at the completion of overpack fabrication, after all intermediate shells have been attached. The leakage test shall have a minimum test sensitivity of 2.15×10^{-6} std cm^3/s (helium). Helium retention welds shall have indicated leakage rates not exceeding 4.3×10^{-6} atm cm^3/s (helium). If a leakage rate exceeding the acceptance criteria is detected, the area of leakage shall be determined using the sniffer probe method or other means, and the area will be repaired per ASME Code Section III, Subsection NB, NB-4450
requirements. Following repair and appropriate NDE, the leakage testing shall be re-performed until the test criteria are satisfied.

Note: If failure of the leakage rate retest occurs after initial repairs are completed, a nonconformance report shall be issued and root cause and corrective action shall be addressed before further repairs and retest are performed.

At the completion of overpack fabrication, helium leakage through the helium retention penetrations (consisting of the inner mechanical seal between the closure plate and top flange and the vent and drain port plug seals) shall be demonstrated to not exceed the leakage rate of 4.3×10^{-6} atm cm^3/s (helium) at a minimum test sensitivity of 2.15×10^{-6} std cm^3/s (helium). This may be performed simultaneously with the boundary weld leakage test or may be performed separately using the methods described in the paragraph below.

Testing of the helium retention penetrations may be performed by evacuating and backfilling the overpack with helium gas. . A helium MSLD will be used (see Chapter 8 for details of test connections specifically designed for testing the penetration seals) to perform the test. Starting with the vent or drain port plug, the test cover is connected. The cavity on the external side of the vent port plug is evacuated and the vacuum pump is valved out. The MSLD detector measures the leakage rate of helium into the test cavity. The minimum test sensitivity shall be 2.15×10^{-6} std cm^3/s (helium). If the leakage rate exceeds the acceptance criteria of 4.3×10^{-6} atm cm^3/s (helium), the test chamber is vented and removed. The corresponding plug seal is removed, seal seating surfaces are inspected and cleaned, and the plug with a new seal is reinstalled and torqued to the required value. The test process is then repeated until the seal leakage rate is successfully achieved. The same process is repeated for the remaining overpack vent or drain port. The process is also used to test the closure plate seal except that the closure plate test tool (see Chapter 8 for details) is used in lieu of the test cover.

If the total measured leakage rate for all tested penetrations does not exceed 4.6×10^{-6} atm cm^3/sec, the leakage tests are successful. If the total leakage rate exceeds 4.6×10^{-6} atm cm^3/sec, an evaluation should be performed to determine the cause of the leakage, repairs made as necessary, and the overpack must be re-tested until the total leakage rate is within the required acceptance criterion. All leak testing results for the HI-STAR overpack shall become part of the quality record documentation package.

9.1.3.2 <u>MPC</u>

On completion of welding the MPC shell to the baseplate, a confinement boundary weld leakage test shall be performed using a helium mass spectrometer leak detector (MSLD) having a minimum test sensitivity of 2.5×10^{-6} std cm^3/s (helium). A temporary test closure lid is used in order to provide a sealed MPC. The confinement boundary welds shall have indicated leakage rates not exceeding 5×10^{-6} atm cm^3/s (helium). If a leakage rate exceeding the test criteria is detected, then the area of leakage shall be determined and the area repaired per ASME Code Section III, Subsection NB, NB-4450, requirements. Retesting will be performed until the leakage rate acceptance criteria is met.

Note: If failure of the leakage rate retest occurs after initial repairs are completed, a nonconformance report shall be issued and root cause and corrective action shall be addressed before further repairs and retest are performed.

Leakage testing of the MPC lid-to-shell field weld shall be performed following completion of the MPC hydrostatic test performed per Subsection 9.1.2.2.2. Leakage testing of the vent and drain port cover plate welds will be performed after field welding of the cover plates and subsequent NDE. The description and procedures for these field tests are provided in Section 8.1, and the acceptance criteria are defined in the Technical Specifications.

All leak testing results for the MPC shall be documented and shall become part of the quality record documentation package.

9.1.4 Component Tests

9.1.4.1 Valves, Rupture Discs, and Fluid Transport Devices

There are no fluid transport devices associated with the HI-STAR 100 System. The only valve-like components in the HI-STAR 100 System are the specialty designed caps installed in the MPC lid for the drain and vent ports. These caps are recessed inside the MPC lid and covered by the fully welded vent and drain port cover plates. No credit is taken for the caps' ability to confine helium or radioactivity. After completion of drying and backfill operations, the drain and vent port cover plates are welded in place on the MPC lid and are leak tested to verify the MPC confinement boundary.

There are two rupture discs installed in the upper ledge surface of the neutron shield enclosure vessel of the HI-STAR overpack. These rupture discs are provided for venting purposes under hypothetical fire accident conditions in which vapor formation from neutron shielding material degradation may occur. The rupture discs are designed to relieve at 30 psig +/- 5 psig). Each manufactured lot of rupture discs shall be sample tested to verify their point of rupture.

9.1.4.2 Seals and Gaskets

Two metallic mechanical seals are provided on the HI-STAR overpack closure plate to provide redundant sealing. Mechanical seals are also used on the overpack vent and drain port plugs of the HI-STAR overpack. Each primary seal is individually leak tested in accordance with Subsection 9.1.3.1. An independent and redundant seal is provided for each penetration (e.g., closure plate, port cover plates, and closure plate test plug). No confinement credit is taken for these redundant seals and they are not leakage tested. Details on these seals are provided in Chapter 7. Procedures for leakage testing are provided in Chapter 8.

9.1.5 Shielding Integrity

The HI-STAR 100 System has three specifically designed shields for neutron and gamma ray attenuation. For gamma shielding, there are successive carbon steel intermediate shells attached onto the outer surface of the overpack inner shell. The details of the manufacturing process are discussed in Chapter 1. Holtite-A neutron shielding is provided in the outer enclosure of the overpack. Additional neutron attenuation is provided by the encased Boral™ neutron absorber attached to the fuel basket cell surfaces inside the MPCs. Test requirements for each of the three shielding items are described below.

9.1.5.1 Fabrication Testing and Controls

Holtite-A:

Neutron shield properties of Holtite-A are provided in Chapter 1, Section 1.2.1.3.2. Each manufactured lot of neutron shield material shall be tested to verify that the material composition (aluminum and hydrogen), boron concentration, and neutron shield density (or specific gravity) meet the requirements specified in Chapter 1 and the Bill of Material sections. A manufactured lot is defined as the total amount of material used to make any number of mixed batches comprised of constituent ingredients from the same lot/batch identification numbers supplied by the constituent manufacturer. Testing will be performed in accordance with written and approved procedures and/or standards. Material composition, boron concentration, and density (or specific gravity) data for each manufactured lot of neutron shield material will become part of the quality documentation package.

The installation of the neutron shielding material shall be performed in accordance with written and qualified procedures. The procedures shall ensure that mix ratios and mixing methods are controlled in order to achieve proper material composition, boron concentration and distribution, and that pours are controlled in order to prevent gaps from occurring in the material. Samples of each manufactured lot of neutron shield material will be maintained by Holtec International as part of the quality record documentation package.

Steel:

All steel plates utilized in the construction of the HI-STAR 100 System shall be dimensionally inspected to assure compliance for minimum thickness in accordance with the Design Drawings in Section 1.5.

The total measured thickness of the inner shell plus intermediate shells shall be a minimum of 8.5 inches. The top flange, closure plate, and bottom plate of the overpack shall be measured to confirm their thicknesses meet design drawing requirements. Measurements shall be performed in accordance with written and approved procedures. The measurement locations and measurements shall be documented. Measurements shall be made through a combination of receipt inspection thickness measurements on individual plates and actual measurements taken prior to welding the overpack or intermediate shells. Any area found to be under the specified minimum thickness will be repaired in accordance with applicable ASME Code requirements.

No additional gamma shield testing of the HI-STAR 100 System is required. A gamma shielding effectiveness test per Subsection 9.1.5.2 will be performed on each fabricated HI-STAR 100 System after the first fuel loading.

General for All Shield Materials:

1. All test results shall be documented and become part of the quality documentation package.

2. Dimensional inspections of the cavities containing poured neutron shielding materials shall assure that the design required amount of shielding material is incorporated into the fabricated item.

9.1.5.2 Shielding Effectiveness Test

Following the first fuel loading of each HI-STAR 100 System, a shielding effectiveness test will be performed at the loading facility site to verify the effectiveness of the gamma and neutron shields. This test will be performed after the HI-STAR 100 System has been loaded with fuel, drained, sealed, and backfilled with helium.

The neutron and gamma shielding effectiveness tests will be performed using written and approved procedures. Calibrated neutron and gamma dose meters shall be used to measure the actual neutron and gamma dose rates at the surface of the HI-STAR overpack. Measurements will be taken at three cross sectional planes and at four points along each plane's circumference. Additionally, four measurements shall be taken at the top of the overpack closure plate. All dose rate measurements shall be documented and become part of the quality documentation package. The average results from each sectional plane shall be compared to the design basis limits for surface dose rates established in Chapter 5. The test is considered acceptable if the actual dose readings are lower or equal to the acceptance criteria in the Technical Specifications. If dose rates are higher than the Technical Specification limits, the required actions of the Technical Specifications shall be completed.

9.1.5.3 Neutron Absorber Tests

After manufacturing, a statistical sample of each lot of Boral is tested using wet chemistry and/or neutron attenuation techniques to verify a minimum ^{10}B content at the ends of the panel. Any panel in which ^{10}B loading is less than the minimum allowed will be rejected.

Tests are performed using written and approved procedures. Results shall be documented and become part of the HI-STAR 100 System quality records documentation package.

Installation of Boral panels into the fuel basket shall be performed in accordance with written and approved procedures (or shop travelers). Travelers and/or quality control procedures shall be in place to assure each required cell wall of the MPC basket contains a Boral panel in accordance with the design drawings. These quality control processes, in conjunction with Boral manufacturing testing, provide the necessary assurances that the Boral will perform its intended function. No additional testing will be required on the Boral.

9.1.6 Thermal Acceptance Test

The first fabricated HI-STAR overpack shall be tested to confirm its heat transfer capability. The test shall be conducted after the radial channels, enclosure shell panels, and neutron shield material have been installed and all inside and outside surfaces are painted per the design drawings. A test cover plate shall be used to seal the overpack cavity. Testing shall be performed in accordance with written and approved procedures.

The thermal test is performed by heating the overpack cavity with a readily measurable source of thermal energy. Prior standard practice has utilized electrical heating systems for confirming thermal performance of casks. However, as explained below, the HI-STAR 100 overpack thermal acceptance test is performed using steam as the source of thermal energy. Steam heating of the overpack cavity surfaces is the preferred method for this test instead of electric heating. There are several advantages with steam heated testing as listed below:

(i) Uniform cavity surface temperatures are readily achieved as a result of high steam condensation heat transfer coefficient (about 1,000 Btu/ft^2 hr-^{o}F compared to about 1 Btu/ft^2 hr-^{o}F for air) coupled with the steam's uniform distribution throughout the cavity.

(ii) A reliable constant temperature source (steam at atmospheric pressure condenses at 212° F compared to variable heater surface temperatures in excess of 1,000^o F) eliminates concerns of overpack cavity surface overheating.

(iii) Interpretation of isothermal test data is not susceptible to errors associated with electric heating systems due to heat input measurement uncertainties, leakage of heat from electrical cables, thermocouple wires, overpack lid, bottom baseplate, etc.

(iv) The test setup is simple requiring only a steam inlet source and drain compared to numerous power measurement and control instruments, switchgear and safety interlocks required to operate an electric heater assembly.

Twelve (12) calibrated thermocouples shall be installed on the external walls of the overpack as shown in Figure 9.1.2. Three calibrated thermocouples shall be installed on the internal walls of the overpack in locations to be determined by procedure. Additional temperature sensors shall be used to monitor ambient temperature, steam supply temperature, and condensate drain temperature. The thermocouples shall be attached to strip chart recorders or other similar mechanism to allow for continuous monitoring and recording of temperatures during the test. Instrumentation shall be installed to monitor overpack cavity internal pressure.

After the thermocouples have been installed, dry steam will be introduced through an opening in the test cover plate previously installed on the overpack and the test initiated. Temperatures of the thermocouples, plus ambient, steam supply, and condensate drain temperature shall be recorded at hourly intervals until thermal equilibrium is reached. Appropriate criteria defining when thermal equilibrium is achieved shall be determined based on a variety of potential ambient test conditions and incorporated into the test procedure. In general, thermal equilibrium is expected approximately 12 hours after the start of steam heating. Air will be purged from the overpack cavity via venting

during the heatup cycle. During the test, the steam condensate flowing out of the overpack drain shall be collected and the mass of the condensate measured with a precision weighing instrument.

Once thermal equilibrium is established, the final ambient, steam supply, and condensate drain temperatures and temperatures at each of the thermocouples shall be recorded. The strip charts, hand-written logs, or other similar readout shall be marked to show the point when thermal equilibrium was established and final test measurements were recorded. The final test readings along with the hourly data inputs and strip charts (or other similar mechanism) shall become part of the quality records documentation package for the overpack. The heat rejection capability of the overpack at test conditions shall be computed using the following formula:

$$Q_{hm} = (h_1 \text{ B } h_2)\, m_c \qquad (8\text{-}1)$$

Where: Q_{hm} = Heat rejection rate of the overpack (Btu/hr)

h_1 = Enthalpy of steam entering the overpack cavity (Btu/lbm)

h_2 = Enthalpy of condensate leaving the overpack cavity (Btu/lbm)

m_c = Average rate of condensate flow measured during thermal equilibrium conditions (lbm/hr)

Based on the HI-STAR 100 overpack thermal model, a design basis minimum heat rejection capacity (Q_{hd}) shall be computed at the measured test conditions (i.e., steam temperature in the overpack cavity and ambient air temperature). The thermal test shall be considered acceptable if the measured heat rejection capability is greater than the design basis minimum heat rejection capacity ($Q_{hm} > Q_{hd}$).

The summary of reference ambient inputs that define the thermal test environment are provided in Table 9.1.4. In Figure 9.1.3, a steady-state temperature contour plot of a steam heated overpack is provided based on the thermal analysis methodology described in SAR Chapter 3. Transient heating of the overpack is also determined to establish the time required to approach (within 2° F) the equilibrium temperatures. The surface temperature plot shown in Figure 9.1.4 demonstrates that a 12-hour steam heating time is adequate to closely approach the equilibrium condition.

If the acceptance criteria above are not met, then the HI-STAR 100 Package shall not be accepted until the root cause is determined, appropriate corrective actions are completed, and the overpack is re-tested with acceptable results.

Test results shall be documented and shall become part of the quality record documentation package.

9.1.7 Cask Identification

Each HI-STAR 100 System shall be provided with unique identification plates with appropriate markings per 10CFR72.236(k) and 10CFR71.85(c). The identification plates shall not be installed until each HI-STAR 100 System component has completed the fabrication acceptance test program and been accepted by authorized Holtec International personnel. A unique identifying serial number shall also be stamped on the MPC to provide traceability back to the MPC-specific quality records documentation package.

Table 9.1.1
MPC INSPECTION AND TEST ACCEPTANCE CRITERIA

Function	Fabrication	Pre-operation	Maintenance and Operations
Visual Inspection and Nondestructive Examination (NDE)	a) Assembly and examination of MPC components per ASME Code Section III, Subsections NB, NF, and NG, as defined on design drawings, per NB-5300, NF-5300, and NG-5300, as applicable. b) A dimensional inspection of the internal basket assembly and canister will be performed to verify compliance with design requirements. c) A dimensional inspection of the MPC lid and MPC closure ring will be performed prior to inserting into the canister shell to verify compliance with design requirements. d) NDE of weldments will be defined on the design drawings using standard American Welding Society NDE symbols and/or notations. e) Cleanliness of the MPC will be verified upon completion of fabrication. f) The packaging of the MPC at the completion of fabrication will be verified prior to shipment.	a) The MPC will be visually inspected prior to placement in service at the licensee's facility. b) MPC protection at the licensee's facility will be verified. c) MPC cleanliness and exclusion of foreign material will be verified prior to placing in the spent fuel pool.	a) None.

Table 9.1.1 (continued)
MPC INSPECTION AND TEST ACCEPTANCE CRITERIA

Function	Fabrication	Pre-operation	Maintenance and Operations
Structural	a) Assembly and welding of MPC components will be performed per ASME Code, Subsections NB, NF, and NG, as applicable. b) Materials analysis (steel, Boral, etc.), will be performed and records will be kept in a manner commensurate with "important to safety" classifications.	a) None.	a) An ultrasonic (UT) examination or multi-layer liquid penetrant (PT) examination of the MPC lid-to-shell weld shall be performed per ASME Section V, Article 5 (or ASME Section V, Article 6). Acceptance criteria for the examination are defined Table 9.1.3 and in the Design Drawings. b) ASME Code NB-6000 hydrostatic test shall be performed after MPC closure welding. Acceptance criteria are defined in Section 9.1.2.2.2.
Leak Tests	a) Helium leak rate testing will be performed on all MPC pressure boundary shop welds.	a) None.	a) Helium leak rate testing will be performed on MPC lid-to-shell, and vent and drain ports-to-MPC lid field welds after closure welding. Acceptance criteria are defined in the Technical Specifications.

Table 9.1.1 (continued)
MPC INSPECTION AND TEST ACCEPTANCE CRITERIA

Function	Fabrication	Pre-operation	Maintenance and Operations
Criticality Safety	a) The boron content will be verified at the time of neutron absorber material manufacture. b) The installation of Boral panels into MPC basket plates will be verified by inspection.	a) None.	a) None.
Shielding Integrity	a) Material compliance will be verified through CMTRs. b) Dimensional verification of MPC lid thickness will be performed.	a) None.	a) None.
Thermal Acceptance	a) None.	a) None.	a) None.
Fit-up Tests	a) Fit-up of the following components is to be tested during fabrication. - MPC lid - vent/drain port cover plates - MPC closure ring b) A gauge test of all basket fuel compartments.	a) Fit-up of the following components is to be verified during pre-operation. - MPC lid - MPC closure ring - vent/drain cover plates	a) None.
Canister Identification Inspections	a) Verification of identification marking applied at completion of fabrication.	a) Identification marking will be checked for legibility during pre-operation.	a) None.

Table 9.1.2
HI-STAR OVERPACK
INSPECTION AND TEST ACCEPTANCE CRITERIA

Function	Fabrication	Pre-operation	Maintenance and Operations
Visual Inspection and Nondestructive Examination (NDE)	a) Assembly and examination will be performed per ASME Code, Subsection NB, NB-5300 for helium retention boundary and Subsection NF, NF-5300 for non-helium retention boundary components. b) A dimensional inspection of the overpack internal cavity, external dimensions, and closure plate will be performed to verify compliance with design requirements. c) NDE of weldments will be defined on design drawings using standard American Welding Society NDE symbols and/or notations. d) Cleanliness of the HI-STAR overpack will be verified upon completion of fabrication. e) Packaging of the HI-STAR overpack at the completion of fabrication will be verified prior to shipment.	a) The HI-STAR overpack will be visually inspected prior to placement in service at the licensee's facility. b) HI-STAR overpack protection at the licensee's facility will be verified. c) HI-STAR overpack cleanliness and exclusion of foreign material will be verified prior to use.	a) None.

Table 9.1.2 (continued)

HI-STAR OVERPACK INSPECTION AND TEST ACCEPTANCE CRITERIA			
Function	**Fabrication**	**Pre-operation**	**Maintenance and Operations**
Structural	a) Assembly and welding of HI-STAR overpack components will be performed per ASME Code, Subsection NB and NF, as applicable. b) Verification of structural materials will be performed through receipt inspection and review of certified material test reports (CMTRs) obtained in accordance with the item's quality classification category. c) A load test of the lifting trunnions will be performed during fabrication per ANSI N14.6. d) A pressure test of the helium retention boundary in accordance with ASME Code Section III, Subsection NB-6000 will be performed. e) A pneumatic pressure test of the neutron shield enclosure will be performed during fabrication.	a) None.	a) The rupture discs on the neutron shield vessel will be replaced every 5 years.

Table 9.1.2 (continued)
HI-STAR OVERPACK
INSPECTION AND TEST ACCEPTANCE CRITERIA

Function	Fabrication	Pre-operation	Maintenance and Operations
Leak Tests	a) Helium leakage rate testing of the HI-STAR overpack helium retention boundary welds (e.g., containment boundary) will be performed in accordance with ANSI N14.5. b) A fabrication verification helium leakage rate test shall be performed on all HI-STAR overpack mechanical seal boundaries in accordance with ANSI N14.5.	a) None.	a) Containment Fabrication Verification Leakage Tests of the HI-STAR 100 System shall be performed prior to commencement of transport operations.
Criticality Safety	a) None.	a) None.	a) None.
Shielding Integrity	a) Material verifications (Holtite-A, shell plates, etc.), will be performed in accordance with the item's quality category. The required material certifications will be obtained. b) The placement of Holtite-A will be controlled through written special process procedures.	a) None.	a) A shielding effectiveness test will be performed after the first fuel loading and re-performed every five years while in service.

Table 9.1.2 (continued)
HI-STAR OVERPACK
INSPECTION AND TEST ACCEPTANCE CRITERIA

Function	Fabrication	Pre-operation	Maintenance and Operation
Thermal Acceptance	a) A thermal acceptance test is performed on the first system, at completion of fabrication to confirm the heat transfer capabilities of the HI-STAR overpack.	a) None.	a) A thermal performance test of the HI-STAR 100 System shall be performed prior to commencement of transport operations.
Cask Identification Inspection	a) Identification plates will be installed on the HI-STAR overpack at completion of the acceptance test program.	a) The identification plates will be checked prior to loading.	a) The identification plates will be periodically inspected per licensee procedures and will be repaired or replaced if damaged.
Functional Performance Tests	a) Fit-up tests of HI-STAR overpack components (closure plates, port plugs, cover plates) will be performed during fabrication.	a) Fit-up test of the HI-STAR overpack lifting trunnions with the lifting yoke will be performed. b) Fit-up test of the HI-STAR overpack rotation trunnions with the horizontal transfer skid (if used) will be performed. c) Fit-up test of the MPC into the HI-STAR overpack will be performed prior to loading.	a) None.

Table 9.1.3 HI-STAR 100 NDE REQUIREMENTS			
MPC			
Weld Location	**NDE Requirement**	**Applicable Code**	**Acceptance Criteria (Applicable Code)**
Shell longitudinal seam	RT PT (surface)	ASME Section V, Article 2 (RT) ASME Section V, Article 6 (PT)	RT: ASME Section III, Subsection NB, Article NB-5320 PT: ASME Section III, Subsection NB, Article NB-5350
Shell circumferential seam	RT PT (surface)	ASME Section V, Article 2 (RT) ASME Section V, Article 6 (PT)	RT: ASME Section III, Subsection NB, Article NB-5320 PT: ASME Section III, Subsection NB, Article NB-5350
Baseplate-to-shell	RT or UT PT (surface)	ASME Section V, Article 2 (RT) ASME Section V, Article 5 (UT) ASME Section V, Article 6 (PT)	RT: ASME Section III, Subsection NB, Article NB-5320 UT: ASME Section III, Subsection NB, Article NB-5330 PT: ASME Section III, Subsection NB, Article NB-5350

Table 9.1.3 (continued) HI-STAR 100 NDE REQUIREMENTS			
MPC			
Weld Location	**NDE Requirement**	**Applicable Code**	**Acceptance Criteria (Applicable Code)**
Lid-to-shell	PT (root and final pass) PT (surface following hydrostatic test) UT or multi-layer PT	ASME Section V, Article 6 (PT) ASME Section V, Article 5 (UT) ASME Section V, Article 6 (PT)	PT: ASME Section III, Subsection NB, Article NB-5350 UT: ASME Section III, Subsection NB, Article NB-5332 PT: ASME Section III, Subsection NB, Article NB-5350
Closure ring-to-shell	PT (final pass)	ASME Section V, Article 6 (PT)	PT: ASME Section III, Subsection NB, Article NB-5350
Closure ring-to-lid	PT (final pass)	ASME Section V, Article 6 (PT)	PT: ASME Section III, Subsection NB, Article NB-5350
Closure ring radial welds	PT (final pass)	ASME Section V, Article 6 (PT)	PT: ASME Section III, Subsection NB, Article NB-5350
Port cover plates-to-lid	PT (root and final pass)	ASME Section V, Article 6 (PT)	PT: ASME Section III, Subsection NB, Article NB-5350
Lift lug and lift lug baseplate	PT (surface)	ASME Section V, Article 6 (PT)	PT: ASME Section III, Subsection NG, Article NG-5350
Vent and drain port cover plate plug welds	PT (surface)	ASME Section V, Article 6 (PT)	PT: ASME Section III, Subsection NB, Article NB-5350

Table 9.1.3 (continued) HI-STAR 100 NDE REQUIREMENTS			
HI-STAR OVERPACK			
Weld Location	**NDE Requirement**	**Applicable Code**	**Acceptance Criteria (Applicable Code)**
Inner shell-to-top flange	RT	ASME Section V, Article 2 (RT)	RT: ASME Section III, Subsection NB, Article NB-5320
	MT or PT (surface)	ASME Section V, Article 7 (MT)	MT: ASME Section III, Subsection NB, Article NB-5340
		ASME Section V, Article 6 (PT)	PT: ASME Section III, Subsection NB, Article NB-5350
Inner shell-to-bottom plate	RT	ASME Section V, Article 2 (RT)	RT: ASME Section III, Subsection NB, Article NB-5320
	MT or PT (surface)	ASME Section V, Article 7 (MT)	MT: ASME Section III, Subsection NB, Article NB-5340
		ASME Section V, Article 6 (PT)	PT: ASME Section III, Subsection NB, Article NB-5350
Inner shell longitudinal seam	RT	ASME Section V, Article 2 (RT)	RT: ASME Section III, Subsection NB, Article NB-5320
	MT or PT (surface)	ASME Section V, Article 7 (MT)	MT: ASME Section III, Subsection NB, Article NB-5340
		ASME Section V, Article 6 (PT)	PT: ASME Section III, Subsection NB, Article NB-5350

Table 9.1.3 (continued) HI-STAR 100 NDE REQUIREMENTS			
HI-STAR OVERPACK			
Weld Location	**NDE Requirement**	**Applicable Code**	**Acceptance Criteria (Applicable Code)**
Inner shell circumferential seam	RT	ASME Section V, Article 2 (RT)	RT: ASME Section III, Subsection NB, Article NB-5320
	MT or PT (surface)	ASME Section V, Article 7 (MT)	MT: ASME Section III, Subsection NB, Article NB-5340
		ASME Section V, Article 6 (PT)	PT: ASME Section III, Subsection NB, Article NB-5350
Intermediate shell welds (as noted on Design Drawings)	MT or PT (surface)	ASME Section V, Article 7 (MT)	MT: ASME Section III, Subsection NF, Article NF-5340
		ASME Section V, Article 6 (PT)	PT: ASME Section III, Subsection NF, Article NF-5350

Table 9.1.4

SUMMARY OF OVERPACK THERMAL ANALYSIS
AMBIENT INPUTS FOR STEAM HEATED TEST CONDITIONS

PARAMETER	VALUE
Steam Temperature	212°F
Ambient Temperature	70°F
Radiative Blocking	None
Exposed Surfaces Insolation	None

FIGURE 9.1.1

THIS FIGURE INTENTIONALLY DELETED

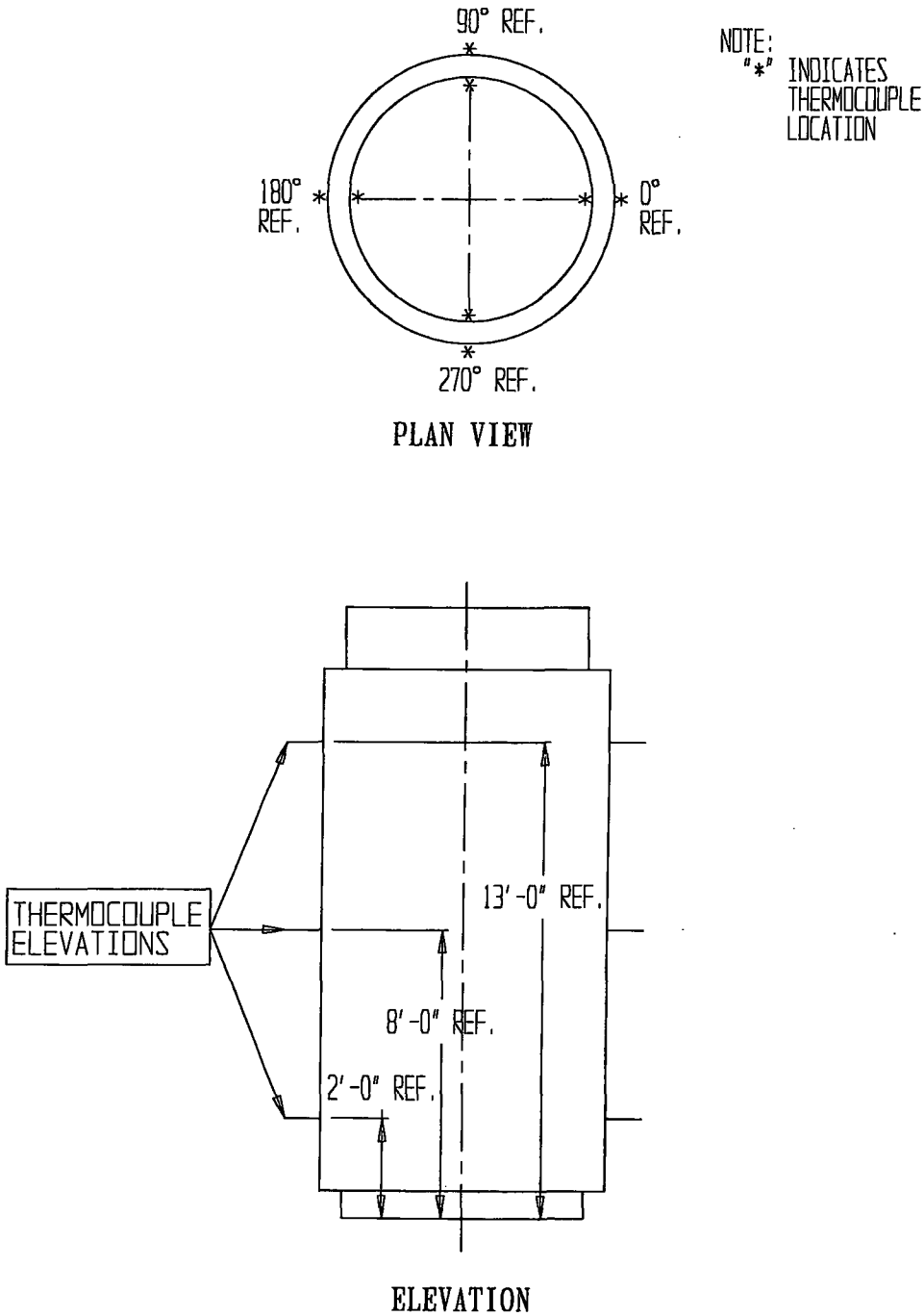

FIGURE 9.1.2; THERMOCOUPLE LOCATIONS

REPORT HI-2012610 | REVISION 0

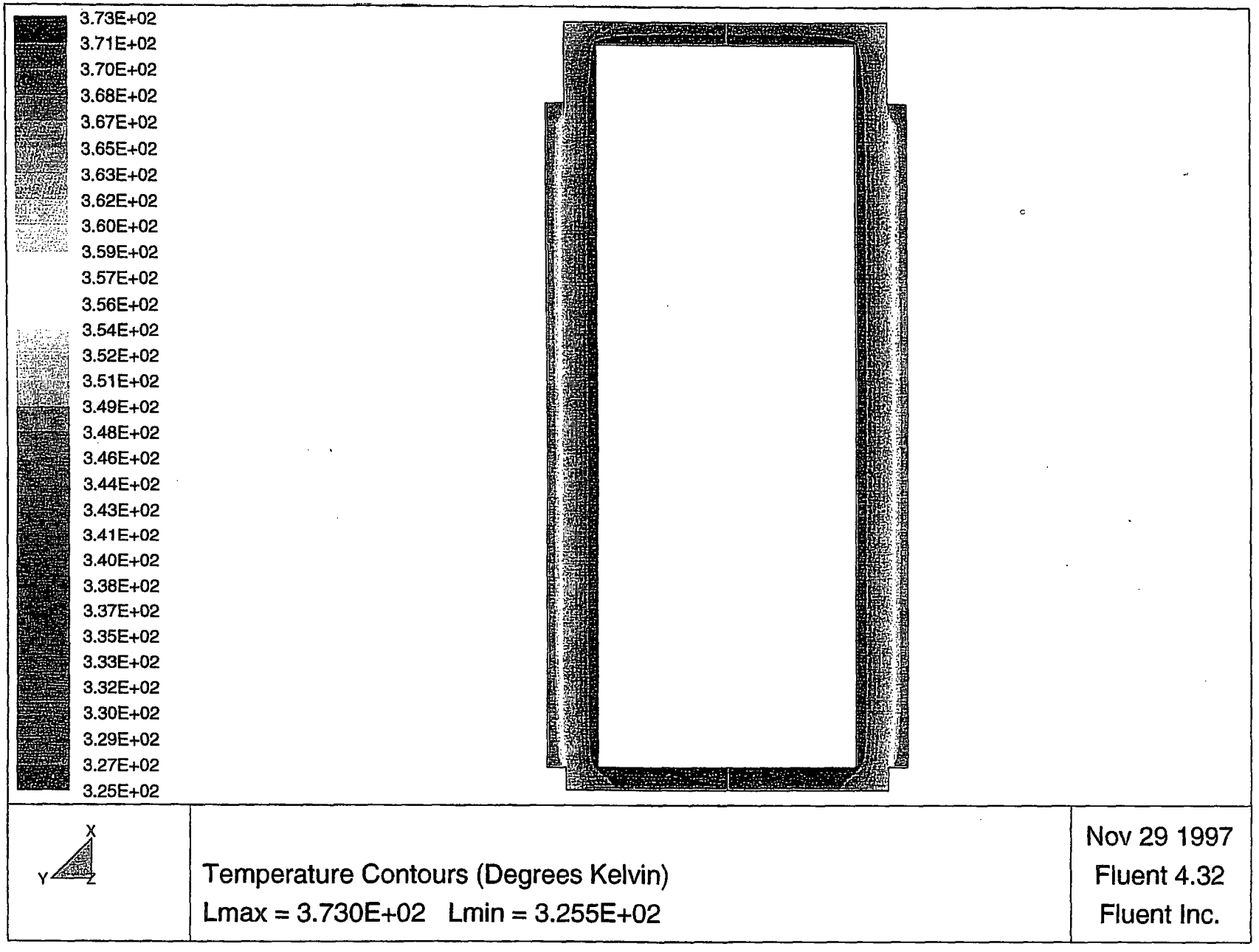

FIGURE 9.1.3: STEAM HEATED OVERPACK TEST CONDITION TEMPERATURE CONTOURS PLOT

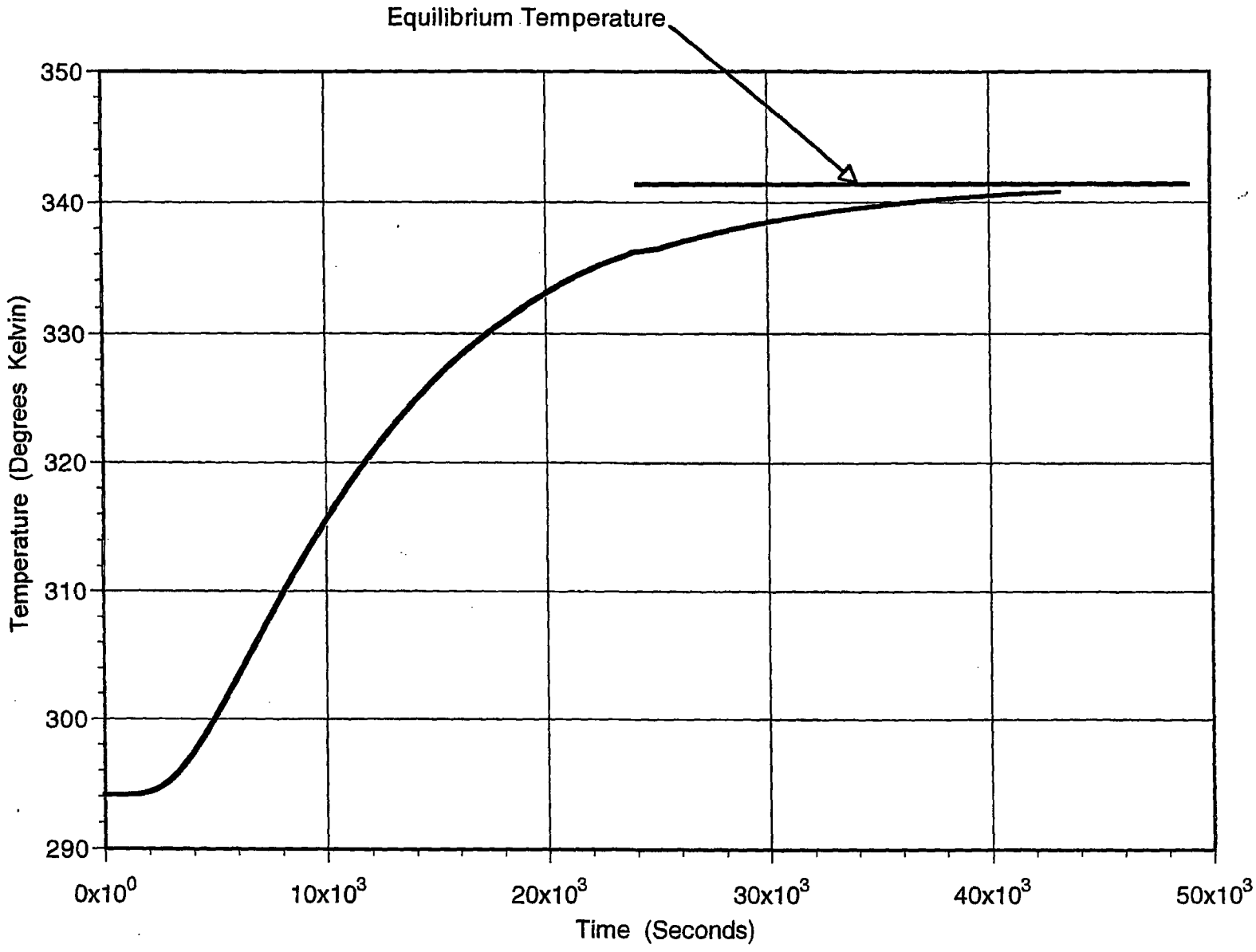

FIGURE 9.1.4: OVERPACK SURFACE TEMPERATURE HISTORY DURING A STEAM HEATED TEST

9.2 MAINTENANCE PROGRAM

An ongoing maintenance program will be defined and incorporated into the HI-STAR 100 System Operations Manual which will be prepared and issued prior to the delivery and first use of the system. This document will delineate the detailed inspections, testing, and parts replacement necessary to ensure continued radiological safety, proper handling, and confinement performance of the system in accordance with 10CFR72 [9.0.1] regulations, the conditions specified in the Certificate of Compliance, and the design requirements and criteria contained in this FSAR.

The HI-STAR 100 System is totally passive by design. There are no active components or monitoring systems required to assure the continued performance of its safety functions. As a result, only minimal maintenance will be required over the HI-STAR 100 System's lifetime, and this maintenance would primarily result from the weathering effects on the exterior coating system while in storage. Typical of such maintenance would be the reapplication of corrosion inhibiting materials on accessible external surfaces. Such maintenance requires methods and procedures no more demanding than those currently in use at licensed facilities.

The maintenance program schedule for the HI-STAR 100 System is provided in Table 9.2.1.

9.2.1 Structural and Pressure Parts

Prior to each fuel loading, a visual examination in accordance with written and approved procedures will be performed on the lifting trunnions (area outside of the overpack) and pocket trunnion recesses. The examination will inspect for indications of overstress such as cracking, deformation, or wear marks. Repairs or replacement in accordance with written and approved procedures will be required if unacceptable conditions are identified.

As described in Chapters 7 and 11, there are no credible normal, off-normal, or accident events which can cause the structural failure of the MPC or HI-STAR overpack. Therefore, periodic structural or pressure tests on the MPCs or HI-STAR overpack following the initial acceptance tests are not required as part of the storage maintenance program.

9.2.2 Leakage Tests

There are no seals or gaskets that comprise the MPC confinement boundary since the MPC lid, port cover plates, and closure ring are welded closures. Metallic seals are used on the overpack helium retention boundary to ensure the retention of the helium in the overpack. These seals are not temperature sensitive within the design temperature range, are resistant to corrosion and radiation environments, and are helium leak tested after fuel loading. There are no credible normal, off-normal, or accident events which can cause the failure of the MPC confinement boundary or overpack helium retention boundary seals or welds. No leakage tests are required as part of the storage maintenance program.

Prior to transport of the HI-STAR 100 System following completion of the storage period, a Containment Periodic Verification leakage test shall be performed in accordance with ANSI N14.5

[9.1.9] and the HI-STAR 100 Safety Analysis Report [9.1.4] to verify the continued integrity of the containment boundary metallic seals.

9.2.3 Subsystem Maintenance

The HI-STAR 100 System does not include any subsystems which provide auxiliary cooling. Normal maintenance and calibration testing will be required on the vacuum drying, helium backfill, and leakage testing systems. Rigging, remote welders, cranes, and lifting beams shall also be inspected to ensure proper maintenance and continued performance is achieved. Auxiliary shielding provided during on-site transfer operations or installed with the HI-STAR 100 at the storage pad requires no maintenance.

9.2.4 Rupture Discs

The rupture discs shall be replaced every five years with approved spares per written and approved procedures.

9.2.5 Shielding

The gamma and neutron shielding materials in the overpack and MPC degrade negligibly over time or as a result of usage. To ensure continuing compliance of the HI-STAR 100 System to the design basis dose rate values, the Shielding Effectiveness Test shall be reperformed every five years after placement into service.

Radiation monitoring of the ISFSI by the licensee provides ongoing evidence and confirmation of the shielding integrity and performance. If increased radiation doses are indicated by the facility monitoring program, additional surveys of overpacks may be performed to determine the cause of the increased dose rates.

The Boral panels installed in the MPC baskets are not expected to degrade under normal long-term dry storage conditions. The use of Boral in similar nuclear applications is discussed in Chapter 1, and the long-term performance in a dry, inert gas atmosphere is evaluated in Chapter 3. Therefore, no periodic verification testing of neutron poison material is required on the HI-STAR 100 System.

9.2.6 Thermal

There are no active cooling systems required for the long-term thermal performance of the HI-STAR 100 System. Therefore, no periodic thermal testing is required for the HI-STAR 100 System.

Table 9.2.1

HI-STAR 100 SYSTEM MAINTENANCE PROGRAM SCHEDULE

Task	Frequency
Overpack cavity visual inspection	Prior to fuel loading
Overpack bolt visual inspection	Prior to installation during each use
Overpack external surface (accessible) visual examination	Annually
HI-STAR 100 System Shield Effectiveness Test	After loading and every 5 years
Lifting trunnion and pocket trunnion recess visual inspection	Prior to next handling operation after loaded HI-STAR 100 System is placed on ISFSI pad.
Closure plate seal replacement	Following removal of closure plate bolting
Port seal replacement	Following opening of applicable port
Port cover plate seal replacement	Following removal of applicable cover plate
Replace neutron shield vessel rupture discs	Every 5 years

9.3 REGULATORY COMPLIANCE

Chapter 9 of this FSAR has been prepared to summarize the commitments of Holtec International to design, construct, and test the HI-STAR 100 System in accordance with the Codes and Standards identified in Chapter 2. Completion of the defined acceptance test program for each HI-STAR 100 System will provide assurance that the SSCs important to safety will perform their design function. The performance of the maintenance program by the licensee for each loaded HI-STAR 100 System will provide assurance for the continued safe long-term storage of the stored SNF.

The described acceptance criteria and maintenance programs can be summarized in the following evaluation statements:

1. Section 9.1 of this FSAR describes Holtec International's proposed program for preoperational testing and initial operations of the HI-STAR 100 System. Section 9.2 describes the proposed HI-STAR 100 maintenance program.

2. Structures, systems, and components (SSCs) of the HI-STAR 100 System designated as important to safety will be designed, fabricated, erected, assembled, inspected, tested, and maintained to quality standards commensurate with the importance to safety of the function they are intended to perform. Tables 2.2.6 and 8.1.4 of this FSAR identify the safety importance and quality classifications of SSCs of the HI-STAR 100 System, and Tables 2.2.6 and 2.2.7 present the applicable standards for their design, fabrication, and inspection.

3. Holtec International will examine and test the HI-STAR 100 System to ensure that it does not exhibit any defects that could significantly reduce its confinement effectiveness. Section 9.1 of this FSAR describes the MPC confinement boundary assembly, inspection, and testing.

4. Holtec International will mark the cask with a data plate indicating its model number, unique identification number, and empty weight. Holtec International Design Drawing No. 1397, Sheet 4 of 7, in Section 1.5 of this FSAR illustrates and details this data plate.

5. It can be concluded that the acceptance tests and maintenance program for the HI-STAR 100 System are in compliance with 10CFR72 [9.0.1], and that the applicable acceptance criteria have been satisfied. The acceptance tests and maintenance program will provide reasonable assurance that the HI-STAR 100 System will allow safe storage of spent fuel throughout its certified term. This can be concluded based on a review that considers the regulation itself, appropriate regulatory guides, applicable codes and standards, and accepted practices.

9.4 REFERENCES

[9.0.1] U.S. Code of Federal Regulations, Title 10, "Energy", Part 72, "Licensing Requirements for the Independent Storage of Spent Nuclear Fuel and High-Level Radioactive Waste."

[9.0.2] NUREG-1536, "Standard Review Plan for Dry Cask Storage Systems", January 1997.

[9.1.1] American Society of Mechanical Engineers, " Boiler and Pressure Vessel Code," Sections II, III, V, IX, and XI, 1995, including Addenda through 1997.

[9.1.2] U.S. Code of Federal Regulations, Title 10, "Energy", Part 71, "Packaging and Transportation of Radioactive Material."

[9.1.3] American Society for Nondestructive Testing, "Personnel Qualification and Certification in Nondestructive Testing," Recommended Practice No. SNT-TC-1A, December 1992.

[9.1.4] HI-STAR 100 Safety Analysis Report, Holtec Report No. HI-951251, current revision.

[9.1.5] American National Standards Institute, Institute for Nuclear Materials Management, "American National Standard for Radioactive Materials - Special Lifting Devices for Shipping Containers Weighing 10,000 Pounds (4500 kilograms) or More", ANSI N14.6, September 1993.

[9.1.6] NUREG-0612, "Control of Heavy Loads at Nuclear Power Plants", U.S. Nuclear Regulatory Commission, Washington, D.C., July 1980.

[9.1.7] U.S. Nuclear Regulatory Commission, "Fracture Toughness Criteria of Base Material for Ferritic Steel Shipping Cask Containment Vessels with a Maximum Wall Thickness of 4 Inches (0.1m)," Regulatory Guide 7.11, June 1991.

[9.1.8] U.S. Nuclear Regulatory Commission, "Fracture Toughness Criteria of Base Material for Ferritic Steel Shipping Cask Containment Vessels with a Wall Thickness Greater than 4 Inches (0.1m) But Not Exceeding 12 Inches (0.3m)," Regulatory Guide 7.12, June 1991.

[9.1.9] American National Standards Institute, Institute for Nuclear Materials Management, "American National Standard for Radioactive Materials Leakage Tests on Packages for Shipment", ANSI N14.5-1997.

[9.1.10] Holtec International Position Paper DS-213, "Acceptable Flaw Size in MPC Lid-to-Shell Welds", Revision 2.

CHAPTER 10: RADIATION PROTECTION

This chapter discusses the design considerations and operational features that are incorporated in the HI-STAR 100 System design to protect plant personnel and the public from exposure to radioactive contamination and ionizing radiation during canister loading, closure, on-site movement, and on-site dry storage. Occupational exposure estimates for typical MPC loading, closure, on-site movement operations, and ISFSI inspections are provided. An off-site dose assessment for a typical ISFSI is also discussed. Since the determination of off-site doses is necessarily site-specific, similar dose assessments are to be prepared by the licensee, as part of implementing the HI-STAR 100 System in accordance with 10CFR72.212 [10.0.1]. The information provided in this chapter is in full compliance with the requirements of NUREG-1536 [10.0.2].

10.1 ENSURING THAT OCCUPATIONAL RADIATION EXPOSURES ARE AS-LOW-AS-REASONABLY-ACHIEVABLE (ALARA)

10.1.1 Policy Considerations

The HI-STAR 100 System has been designed in accordance with 10CFR72 [10.0.1] and maintains radiation exposures ALARA consistent with 10CFR20 [10.1.1] and the guidance provided in Regulatory Guides 8.8 [10.1.2] and 8.10 [10.1.3]. Licensees using the HI-STAR 100 System will utilize and apply their existing site ALARA policies, procedures and practices for ISFSI activities to ensure that personnel exposure requirements of 10CFR20 [10.1.1] are met. Personnel performing ISFSI operations shall be trained on the operation of the HI-STAR 100 System, and be familiarized with the expected dose rates around the MPC and overpack during all phases of loading, storage, and unloading operations. Chapter 12 provides dose rate limits for the MPC lid and the overpack surfaces to ensure that the HI-STAR 100 System is operated within design basis conditions and that ALARA goals will be met. Pre-job ALARA briefings should be held with workers and radiological protection personnel prior to work on or around the system. Worker dose rate monitoring, in conjunction with trained personnel and well-planned activities, will significantly reduce the overall dose received by the workers. When preparing or making changes to site-specific procedures for ISFSI activities, users shall ensure that ALARA practices are implemented and the 10CFR20 [10.1.1] standards for radiation protection are met in accordance with the site's written commitment. Users will further reduce dose rates around the HI-STAR 100 System by preferentially loading longer-cooled and lower-burnup spent fuel assemblies in the periphery fuel storage cells of the MPC, and loading assemblies with shorter cooling times and higher burnups in the inner MPC fuel storage cell locations as specified in the Technical Specifications. Users can also further reduce the dose rates around the HI-STAR 100 System by the use of temporary shielding. Temporary shielding is discussed in Section 10.1.4.

10.1.2 Design Considerations

Consistent with the design criteria defined in Section 2.3.5, the radiological protection criteria that limit exposure to radioactive effluents and direct radiation from an ISFSI using the HI-STAR 100 System are as follows:

1. 10CFR72.104 [10.0.1] requires that for normal operation and anticipated occurrences, the annual dose equivalent to any real individual located beyond the owner-controlled area boundary must not exceed 25 mrem to the whole body, 75 mrem to the thyroid, and 25 mrem to any other organ. This dose would be a result of planned discharges, direct radiation from the ISFSI, and any other radiation from uranium fuel cycle operations in the area. The licensee is responsible for demonstrating site-specific compliance with these requirements.

2. 10CFR72.106 [10.0.1] requires that any individual located on or beyond the nearest owner-controlled area boundary must not receive a dose greater than 5 rem to the whole body or any organ from a design basis accident. The licensee is responsible for demonstrating site-specific compliance with this requirement.

3. 10CFR20 [10.1.1], Subparts C and D, limit occupational exposure and exposure to individual members of the public. The licensee is responsible for demonstrating site-specific compliance with this requirement.

4. Regulatory Position 2 of Regulatory Guide 8.8 [10.1.2] provides guidance regarding facility and equipment design features. This guidance has been followed in the design of the HI-STAR 100 System as described below:

   - Regulatory Position 2a, regarding access control, is met by locating the ISFSI in a Protected Area in accordance with 10CFR72.212(b)(5)(ii) [10.0.1]. Unauthorized access is prevented once a loaded HI-STAR 100 System is placed in an ISFSI. Due to the nature of the system, only limited monitoring for security is required, thus reducing occupational exposure and supporting ALARA considerations. The licensee is responsible for site-specific compliance with these criteria.

   - Regulatory Position 2b, regarding radiation shielding, is met by the overpack biological shielding that minimizes personnel exposure as described in Chapter 8. Fundamental design considerations that most directly influence occupational exposures with dry storage systems in general and which have been incorporated into the HI-STAR 100 System design include:

     – system designs that reduce or minimize the number of handling and transfer operations for each spent fuel assembly;

- system designs that reduce or minimize the number of handling and transfer operations for each MPC loading;
- system designs that maximize fuel capacity, thereby taking advantage of the self-shielding characteristics of the fuel and the reduction in the number of MPCs that must be loaded and handled;
- system designs that minimize decontamination requirements at ISFSI decommissioning;
- system designs that optimize the placement of shielding with respect to anticipated worker locations and fuel placement;
- thick-walled overpacks that provide gamma and neutron shielding;
- thick MPC lid which provides effective shielding for operators during MPC loading and unloading operations;
- multiple welded barriers to confine radionuclides;
- smooth surfaces to reduce decontamination time;
- minimization of potential crud traps on the handling equipment to reduce decontamination requirements;
- capability of maintaining water in the MPC and annulus during MPC welding to reduce dose rates;
- capability of maintaining water in the annulus space to reduce dose rates during closure operations;
- MPC penetrations located and configured to reduce streaming paths;
- overpack penetrations located and oriented to reduce streaming paths;
- MPC vent and drain ports with re-sealable caps to prevent the release of radionuclides during loading and unloading operations and facilitate draining, drying, and backfill operations;
- use of an annulus seal and annulus overpressure system to prevent contamination of the MPC shell outer surfaces during in-pool activities;
- available temporary and auxiliary shielding to reduce dose rates around the overpack; and
- low-maintenance design to reduce doses during storage operation.

• Regulatory Position 2c, regarding process instrumentation and controls, is met since there are no radiation instrumentation and controls needed at the ISFSI.

- Regulatory Position 2d, regarding control of airborne contaminants, is met since the HI-STAR 100 System is designed to withstand all design basis conditions without loss of confinement function, as described in Chapter 7 of this FSAR, and no gaseous releases are anticipated. No significant surface contamination is expected since the exterior of the MPC is kept clean by using clean water in the overpack-MPC annulus and by using an inflatable annulus seal and optional annulus overpressure system.

- Regulatory Position 2e, regarding crud control, is not applicable to a HI-STAR 100 System ISFSI since there are no radioactive systems at an ISFSI that could transport crud.

- Regulatory Position 2f, regarding decontamination, is met since the exterior of the loaded overpack is decontaminated prior to being removed from the plant's fuel building. The exterior surface of the overpack is designed for ease of decontamination. In addition, an inflatable annulus seal and optional annulus overpressure system is used to prevent fuel pool water from contacting and contaminating the exterior surface of the MPC.

- Regulatory Position 2g, regarding radiation monitoring systems, is met since the HI-STAR 100 System has been designed for redundant, multi-pass welded closures on the MPC; consequently, no monitoring of the confinement boundary is necessary and no gaseous or particulate releases occur for normal, off-normal or postulated accident conditions;

- Regulatory Position 2h, regarding resin treatment systems, is not applicable to an ISFSI since there are no treatment systems containing radioactive resins.

- Regulatory Position 2i, regarding other miscellaneous ALARA items, is met since stainless steel is used in the MPC shell, the primary confinement boundary. This material is resistant to the damaging effects of radiation and is well proven in cask use. Use of this material quantitatively reduces or eliminates the need to perform maintenance (or replacement) on the primary confinement system.

10.1.3 Operational Considerations

Operational considerations that most directly influence occupational exposures with dry storage systems in general and that have been incorporated into the design of the HI-STAR 100 System include:

- totally-passive design requiring minimal maintenance and monitoring (other than security monitoring) during storage;
- remotely operated welding system, lift yoke, weld removal system and Vacuum Drying System (VDS) to reduce time operators spend in the vicinity of the loaded MPC;
- maintaining water in the MPC and the annulus region during MPC closure activities to reduce dose rates;
- descriptive operating procedures that provide guidance to reduce equipment contamination, obtain survey information, minimize dose and alert workers to possible changing radiological conditions;
- preparation and inspection of the overpack in low-dose areas;
- MPC lid fit tests and inspections prior to actual loading to ensure smooth operation during loading;
- gas sampling of the MPC and HI-STAR 100 System annulus (receiving from transport) to assess the condition of the cladding and MPC confinement boundary prior to opening;
- fuel cool-down operations developed for fuel unloading operations which minimize thermal shock to the fuel and therefore reduce the potential for fuel cladding rupture;
- wetting of component surfaces prior to placement in the spent fuel pool to reduce the need for decontamination;
- decontamination practices which consider the effects of weeping during overpack heat up and surveying of the overpack prior to removal from the fuel handling building;

- incorporation of ALARA principles in operation, surveillance, and maintenance procedures;
- a sequence of operations based on ALARA considerations; and
- use of mock-ups to prepare personnel for actual work situations.

10.1.4 Auxiliary/Temporary Shielding

To minimize occupational and site boundary doses, the HI-STAR 100 System has optional auxiliary shielding available for use during loading, storage and unloading operations. The HI-STAR 100 System auxiliary shielding consists of the Automated Welding System Baseplate, the overpack temporary shield ring, the annulus shield, the overpack bottom cover, the pocket trunnion neutron shield plugs, and the overpack bottom ring shield. Each auxiliary shield is described in Table 10.1.1, and the procedures for utilization are provided in Chapter 8. Users shall evaluate the need for auxiliary and temporary shielding based on an ALARA review of each loading operation. For fuel assemblies with lower burnups and longer cooling times, the need for auxiliary and temporary shielding is reduced.

Table 10.1.1
HI-STAR 100 System AUXILIARY AND TEMPORARY SHIELDS

Temporary Shield	Description	Utilization
Automated Welding System Baseplate - See Figure 10.1.1	Thick gamma and neutron shield circular plate that sits on the MPC lid. Plate is set directly on the MPC lid. Threaded lift holes are provided to assist in rigging.	Used during MPC closure and unloading operations in the cask preparation area to reduce the dose rates around the MPC lid. The design of the closure ring allows the baseplate shield to remain in place during the entire closure operation.
Overpack Temporary Shield Ring - See Figure 10.1.2	A shield that fits on the cask neutron shield around the upper forging and provides supplemental shielding to personnel performing cask loading and closure operations.	Used during MPC and overpack closure operations to reduce dose rates to the operators around the top flange of the overpack.
Annulus Shield - See Figure 10.1.3	A shield that is seated between the MPC shell and the overpack.	Used during MPC closure operations to reduce streaming from the annulus.
Overpack Bottom Cover - See Figure 10.1.4	A cup-shaped gamma and neutron shield cover that is attached to the overpack bottom and secured using the impact limiter bolt holes.	Used during on-site horizontal transfer of the loaded overpack to reduce dose rates from the bottom of the overpack.
Overpack Bottom Ring - See Figure 10.1.5	A series of segmented, concrete rings that are placed under the neutron shield around the base of the overpack. The ring segments when positioned, form a complete ring around the overpack base. The rings are placed in position on the ISFSI pad and are not secured.	Used during storage of the overpacks on the ISFSI pad to reduce the dose rates around the base of the overpack.
Pocket Trunnion Neutron Shield Plugs – See Figure 10.1.6	A custom-fit stainless steel clad neutron shielding material that is inserted and bolted into the pocket trunnions.	Used during storage of the overpack on the ISFSI pad. Reduces the neutron dose rate around the pocket trunnions.

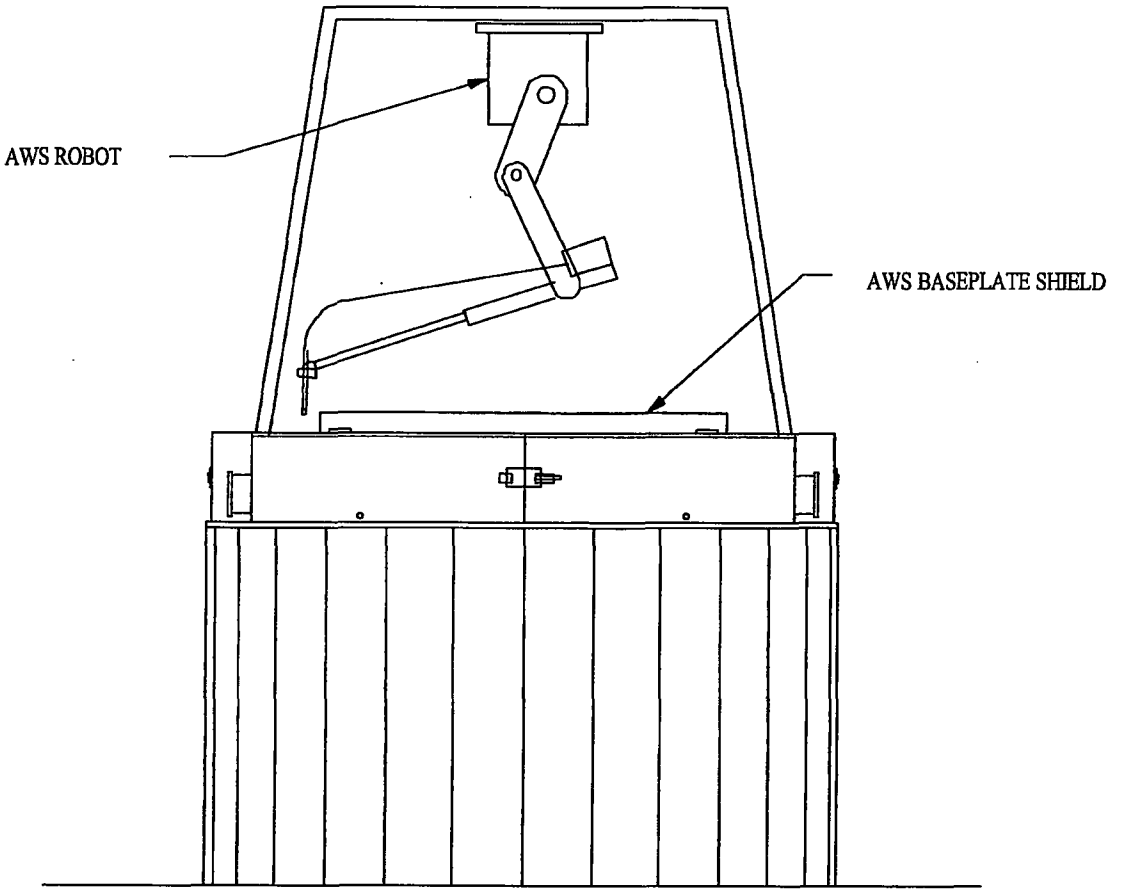

Figure 10.1.1; HI-STAR 100 Temporary Shielding – Automated Welding System Baseplate

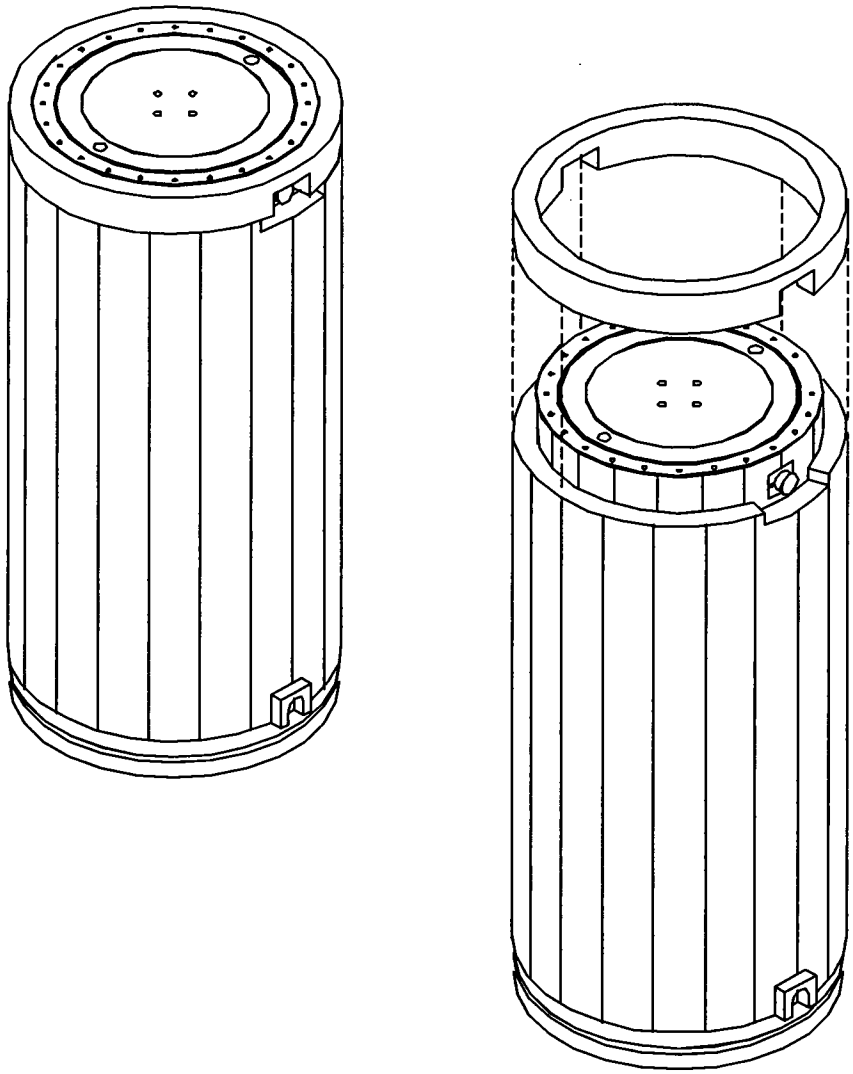

Figure 10.1.2; HI-STAR 100 Temporary Shielding - Temporary Shield Ring

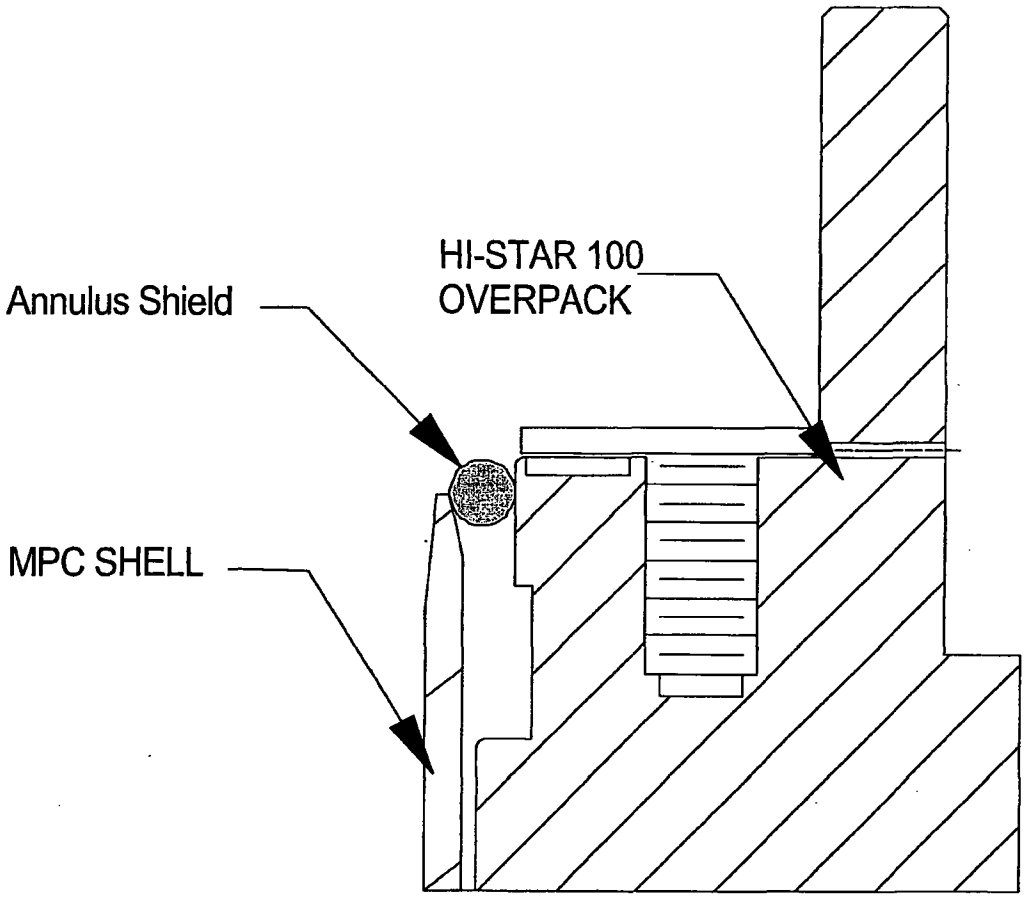

Figure 10.1.3; HI-STAR 100 Temporary Shielding – Annulus Shield

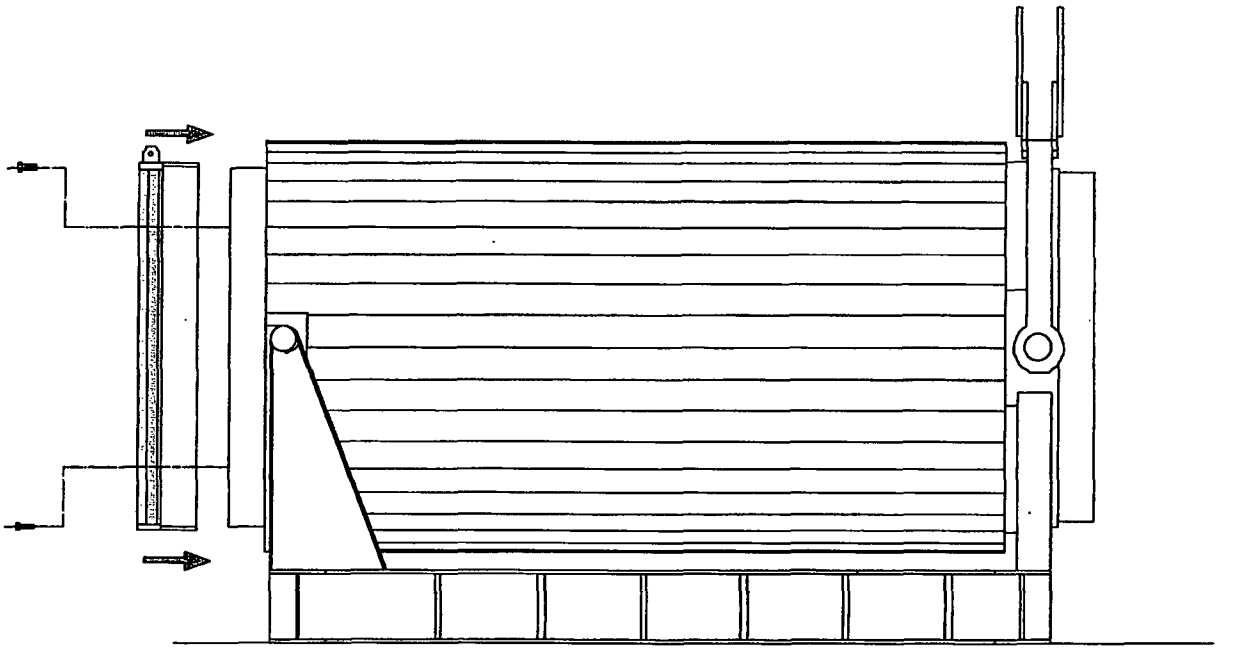

Figure 10.1.4; HI-STAR 100 Temporary Shielding – Overpack Bottom Cover

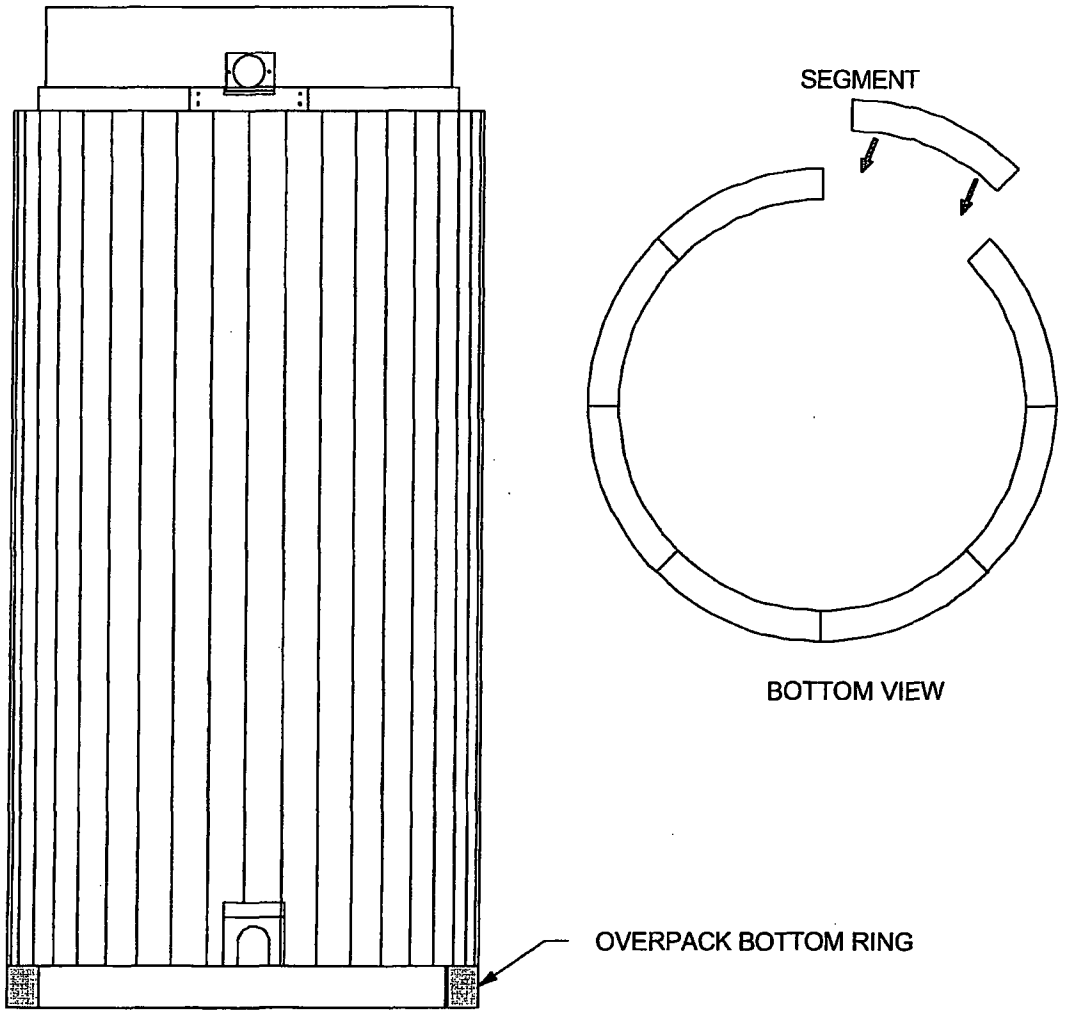

Figure 10.1.5; HI-STAR 100 Temporary Shielding – Overpack Bottom Ring

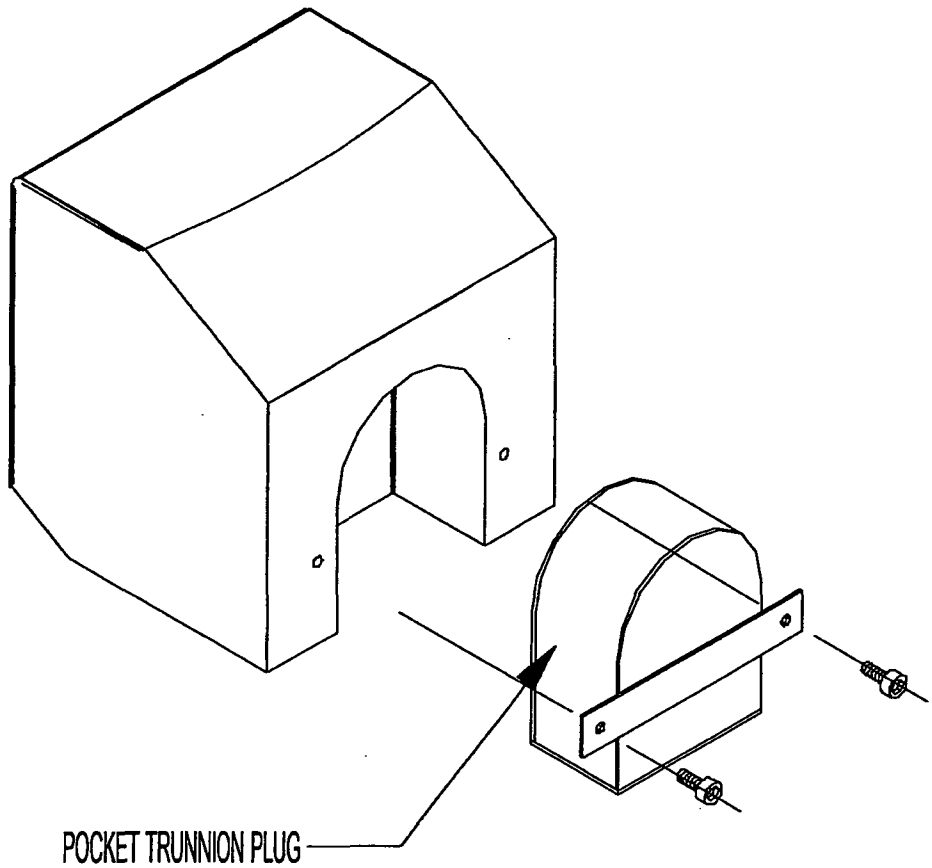

Figure 10.1.6; HI-STAR 100 Temporary Shielding – Pocket Trunnion Plugs

10.2 RADIATION PROTECTION DESIGN FEATURES

The development of the HI-STAR 100 System has focused on design provisions to address the considerations summarized in Sections 10.1.2 and 10.1.3. The following specific design features ensure a high degree of confinement integrity and radiation protection:

- HI-STAR 100 System has been designed to meet storage condition dose rates required by 10CFR72 [10.0.1] containing spent fuel assemblies cooled at least 5 years;
- HI-STAR 100 System has been designed to accommodate a maximum number of PWR or BWR fuel assemblies to minimize the number of cask systems that must be handled and stored at the storage facility and later transported off-site;
- HI-STAR 100 System is low maintenance because of the outer metal shell. The metal shell and its protective coating are extremely resistant to degradation;
- HI-STAR 100 System has been designed for redundant, multi-pass welded closures on the MPC; consequently, no monitoring of the confinement boundary is necessary and no gaseous or particulate releases occur for normal, off-normal or postulated accident conditions; and
- HI-STAR 100 System has auxiliary shielding devices which eliminate streaming paths and simplify operations.

10.3 ESTIMATED ON-SITE COLLECTIVE DOSE ASSESSMENT

This section provides the estimates of the cumulative exposure to personnel performing loading and unloading operations using the HI-STAR 100 System. This section uses the shielding analysis provided in Chapter 5 and the operations procedures provided in Chapter 8 to develop a dose rate assessment for loading and unloading operations. The dose rate assessments are provided in Table 10.3.1 and Table 10.3.2 for loading and unloading operations, respectively.

The dose rates on and around the HI-STAR 100 System overpack and MPC lid are estimated using an 18-inch, on-contact and 1-meter dose rates for the overpack during the loading and unloading operations. The dose rates around the overpack are based on 24 PWR fuel assemblies with a burnup of 40,000 MWD/MTU and cooling of 5 years. The selection of this fuel assembly type bounds all possible loading scenarios for the HI-STAR 100 System from a dose-rate perspective. No assessment is made with respect to radiation levels around the cask during operations where no fuel is in the MPC since radiation levels vary significantly by site and locations within. In addition, exposures are based on work being performed without the temporary shielding described in Section 10.1.4.

The dose rate location points around the overpack were selected to model actual worker locations. Cask operators typically work at an arms-reach distance from the cask. To account for this, either an 18-inch distance or a rough average of on-contact and 1-meter dose rates were used to roughly estimate the dose rate for the worker. This assessment takes credit for the actual number of workers directly working around the cask and the actual time spent in the vicinity of the cask. The duration times and number of workers are based on historical accounts of spent fuel canister loading operations at nuclear utilities, taking into account the proximity of controls and remote control features of the HI-STAR 100 ancillary equipment. For example, the Vacuum Drying System and Automated Welding System are remotely operated to minimize the amount of time the operators need to spend in direct contact with the cask. Typically, once the cask is configured for a specific task, the operators are free to exit the work area and continue operations from an ALARA low-dose area.

Table 10.3.1 provides a summary of the dose assessment for a HI-STAR 100 System loading operation. Table 10.3.2 provides a summary of the dose assessment for a HI-STAR 100 System unloading operation. Because of the various operational requirements for the different sites, a conservative approach on operations was used to assess the personnel exposures. The personnel requirements and anticipated duration of activities are based on previous utility canister loading experience and published data.

10.3.1 Estimated Exposures for Loading and Unloading Operations

The assumptions discussed above are conservative by design. Historically, actual occupational doses to load and place canister-based systems in storage are significantly lower than the projected values for those systems. The main factors attributed to the lower-than-projected personnel exposures are the age of the spent fuel, conservative assumptions in the dose estimates, and good ALARA practices. These same considerations are expected to factor into the actual operation of the HI-STAR 100 System. To estimate the dose received by a single worker, it should be understood that a canister-based system requires a diverse range of disciplines to perform all the necessary functions. Technical Specifications with time limits and control of utility restart conditions have prompted utilities to load canister systems in a round-the-clock mode. This results in the exposure being spread out over a team of operators and technicians with no single discipline receiving a majority of the exposure.

The dose rates provided in Tables 10.3.1 and 10.3.2 are conservatively based on fuel assemblies with 40,000 MWD/MTU and 5-year cooling which bounds the allowable burnup and cooling time combinations for the HI-STAR 100 System. The total person-rem exposure from operation of the HI-STAR 100 System is proportional to the number of systems loaded. A typical utility will load approximately four MPCs per reactor cycle to maintain the current available spent fuel pool capacity. Utilities requiring dry storage of spent fuel assemblies typically have a large inventory of spent fuel assemblies that date back to the reactor's first cycle. The older fuel assemblies will have a significantly lower dose rate than the design basis fuel assemblies. Users shall assess the cask loading for their particular fuel types (age, burnup, cooling time) to satisfy the requirements of 10CFR20 [10.1.1].

10.3.2 Estimated Exposures for Surveillance and Maintenance

Table 10.3.3 provides the maximum anticipated occupational exposure received from security surveillance and maintenance of an ISFSI. Although the HI-STAR 100 System requires minimal maintenance during storage, maintenance will be required around the ISFSI for items such as security equipment maintenance, grass cutting, snow removal, drainage system maintenance, and lighting, telephone, and intercom repair. Security surveillance time is based on a daily security patrol around the perimeter of the ISFSI security fence. Users may opt to utilize remote security viewing methods instead of performing direct visual observation of the ISFSI. Since security surveillances can be performed from outside the ISFSI, a dose rate of 4 mrem/hour is conservatively used. The estimated dose rates described below are based on a sample array of HI-STAR 100 Systems fully loaded with design basis fuel assemblies, placed at their minimum required pitch, in a 2 x 6 HI-STAR 100 System array. The maintenance worker is assumed to be at a distance of 5 meters from the center of the long edge of the array. For maintenance of the casks and the ISFSI, a dose rate of 50 mrem/hour is estimated.

Table 10.3.1
HI-STAR 100 SYSTEM LOADING OPERATIONS
ESTIMATED OPERATIONAL EXPOSURES (40,000MWD/MTU, 5-YEAR COOLED FUEL)

ACTIVITY	NUMBER OF WORKERS†	DURATION (HOURS)††	ESTIMATED DOSE RATE (MREM/HR)	OCCUPATIONAL DOSE TO INDIVIDUAL (PERSON-MREM)	ESTIMATED TOTAL DOSE FOR TASK (PERSON-MREM)
REMOVE HI-STAR CLOSURE PLATE	2	1	0	0	0
INSTALL EMPTY MPC	3	2	0	0	0
INSTALL UPPER FUEL SPACERS	3	4	0	0	0
INSTALL LOWER FUEL SPACERS	3	4	0	0	0
FILL MPC AND ANNULUS	2	4	0	0	0
INSTALL ANNULUS SEAL	1	0.3	0	0	0
PLACE HI-STAR IN SPENT FUEL POOL	3	1.2	5	6	18
LOAD FUEL ASSEMBLIES INTO MPC	3	11.3	5	56.5	170
PERFORM ASSEMBLY IDENTIFICATION VERIFICATION	3	1.5	5	7.5	22.5
INSTALL DRAIN LINE TO MPC LID	3	0.8	5	4	12
ALIGN MPC LID AND LIFT YOKE TO DRAIN LINE	2	0.2	5	1	2
INSTALL MPC LID	2	0.4	5	2	4
REMOVE HI-STAR FROM SPENT FUEL POOL	2	0.4	18.5	7.4	14.8
DECONTAMINATE HI-STAR BOTTOM	2	0.2	44	8.8	17.6
SET HI-STAR IN CASK PREPARATION AREA	2	0.5	20	10	20
MEASURE DOSE RATES AT MPC LID	1	0.2	18.5	3.7	3.7
DECONTAMINATE HI-STAR AND LIFT YOKE	3	0.7	20	14	42
INSTALL TEMPORARY SHIELD RING	2	0.3	22	6.6	13.2
REMOVE INFLATABLE ANNULUS SEAL	1	0.1	18.5	1.85	1.85

† Indicates number of workers in direct or close contact with HI-STAR 100.
†† Indicates actual duration of work in direct or close contact with HI-STAR 100.

Table 10.3.1 (Continued)
HI-STAR 100 SYSTEM LOADING OPERATIONS
ESTIMATED OPERATIONAL EXPOSURES (40,000MWD/MTU, 5-YEAR COOLED FUEL)

ACTIVITY	NUMBER OF WORKERS†	DURATION (HOURS)††	ESTIMATED DOSE RATE (MREM/HR)	OCCUPATIONAL DOSE TO INDIVIDUAL (PERSON-MREM)	ESTIMATED TOTAL DOSE FOR TASK (PERSON-MREM)
LOWER ANNULUS WATER LEVEL SLIGHTLY	1	0.2	18.5	3.7	3.7
SMEAR MPC LID TOP SURFACES	1	0.2	18.5	3.7	3.7
INSTALL ANNULUS SHIELD	1	0.1	18.5	1.85	1.85
LOWER MPC WATER LEVEL	2	0.5	18.5	9.25	18.5
WELD MPC LID & Perform NDE	2	1.2	18.5	22.2	44.4
PERFORM VOL EXAM OF MPC WELD	2	0.3	18.5	5.55	11.1
RAISE MPC WATER LEVEL	2	0.1	18.5	1.85	3.7
PERFORM HYDRO TEST ON MPC	2	0.3	18.5	5.55	11.1
PERFORM LEAKAGE TESTING	2	0.5	18.5	9.25	18.5
DRAIN MPC	1	0.7	77	53.9	53.9
MEASURE VOLUME OF WATER DRAINED	1	0.1	77	7.7	7.7
VACUUM DRY MPC	1	0.3	77	23.1	23.1
PERFORM MPC DRYNESS VERIFICATION TEST	2	0.1	77	7.7	15.4
BACKFILL MPC	2	0.2	77	15.4	30.8
WELD VENT AND DRAIN PORT COVER PLATES	1	0.2	77	15.4	15.4
PERFORM A LIQUID PENETRANT EXAMINATION	2	0.3	77	23.1	46.2
PERFORM LEAKAGE TEST ON COVER PLATES	2	0.2	77	15.4	30.8

† Indicates number of workers in direct or close contact with HI-STAR 100.
†† Indicates actual duration of work in direct or close contact with HI-STAR 100.

Table 10.3.1 (Continued)
HI-STAR 100 SYSTEM LOADING OPERATIONS
ESTIMATED OPERATIONAL EXPOSURES (40,000MWD/MTU, 5-YEAR COOLED FUEL)

ACTIVITY	NUMBER OF WORKERS†	DURATION (HOURS)††	ESTIMATED DOSE RATE (MREM/HR)	OCCUPATIONAL DOSE TO INDIVIDUAL (PERSON-MREM)	ESTIMATED TOTAL DOSE FOR TASK (PERSON-MREM)
WELD MPC CLOSURE RING	1	0.4	77	30.8	30.8
PERFORM NDE ON CLOSURE RING WELDS	2	0.3	77	23.1	46.2
DRAIN ANNULUS	1	0.2	185	37	37
PERFORM SURVEYS ON HI-STAR	1	0.2	85	17	17
REMOVE ANNULUS SHIELD	1	0.1	77	7.7	7.7
INSTALL HI-STAR CLOSURE PLATE	3	1.5	17.6	26.4	79.2
VACUUM DRY HI-STAR ANNULUS	1	0.2	17.6	3.52	3.52
BACKFILL HI-STAR ANNULUS	1	0.2	17.6	3.52	3.52
LEAKTEST HI-STAR ANNULUS	2	0.5	73.4	36.7	73.4
REMOVE TEMPORARY SHIELD RING	2	0.2	93	18.6	37.2
PERFORM FINAL SURVEYS ON HI-STAR	1	0.2	85	17	17
PLACE HI-STAR IN STORAGE	2	1.3	85	110.5	221
INSTALL HI-STAR POCKET TRUNNION PLUGS	1	0.2	185	37	37
INSTALL BOTTOM SHIELD RING	2	0.2	185	37	74
TOTAL					1365.9

† Indicates number of workers in direct or close contact with HI-STAR 100.
†† Indicates actual duration of work in direct or close contact with HI-STAR 100.

Table 10.3.2
HI-STAR 100 SYSTEM UNLOADING OPERATIONS
ESTIMATED OPERATIONAL EXPOSURES (40,000MWD/MTU, 5-YEAR COOLED FUEL)

ACTIVITY	NUMBER OF WORKERS†	DURATION (HOURS)††	ESTIMATED DOSE RATE (MREM/HR)	OCCUPATIONAL DOSE TO INDIVIDUAL (PERSON-MREM)	ESTIMATED TOTAL DOSE FOR TASK (PERSON-MREM)
REMOVE BOTTOM SHIELD RING	2	0.2	185	37	74
REMOVE HI-STAR POCKET TRUNNION PLUGS	1	0.2	185	37	37
RECOVER HI-STAR FROM STORAGE	2	1.3	85	110.5	221
PLACE HI-STAR IN DESIGNATED PREPARATION AREA	2	0.6	85	51	102
SAMPLE ANNULUS GAS	2	0.3	18	5.4	10.8
REMOVE HI-STAR CLOSURE PLATE	2	1	77	77	154
FILL ANNULUS	1	0.2	77	15.4	15.4
INSTALL ANNULUS SHIELD	1	0.1	77	7.7	7.7
REMOVE MPC CLOSURE RING	1	0.4	77	30.8	30.8
REMOVE VENT PORT COVERPLATE WELD AND SAMPLE MPC GAS	1	0.4	77	30.8	30.8
PERFORM MPC COOL-DOWN	1	0.2	77	15.4	15.4
FILL MPC CAVITY WITH WATER	1	0.7	77	53.9	53.9
REMOVE MPC LID TO SHELL WELD	1	0.7	18	12.6	12.6
INSTALL INFLATABLE SEAL	1	0.1	18	1.8	1.8
PLACE HI-STAR IN SPENT FUEL POOL	2	0.4	20	8	16
REMOVE MPC LID	2	0.4	5	2	4
REMOVE SPENT FUEL ASSEMBLIES FROM MPC	3	11.3	5	56.5	113

† Indicates number of workers in direct or close contact with HI-STAR 100.
†† Indicates actual duration of work in direct or close contact with HI-STAR 100.

Table 10.3.2 (Continued)
HI-STAR 100 SYSTEM UNLOADING OPERATIONS
ESTIMATED OPERATIONAL EXPOSURES (40,000MWD/MTU, 5-YEAR COOLED FUEL)

ACTIVITY	NUMBER OF WORKERS†	DURATION (HOURS)††	ESTIMATED DOSE RATE (MREM/HR)	OCCUPATIONAL DOSE TO INDIVIDUAL (PERSON-MREM)	ESTIMATED TOTAL DOSE FOR TASK (PERSON-MREM)
VACUUM CELLS OF MPC	2	1.5	5	7.5	15
REMOVE HI-STAR FROM SPENT FUEL POOL	3	1.2	5	6	18
LOWER WATER LEVEL IN MPC	1	0.2	5	1	1
PUMP REMAINING WATER IN MPC TO SPENT FUEL POOL	1	2	0	0	0
REMOVE MPC FROM HI-STAR	2	1	0	0	0
DECONTAMINATE MPC AND HI-STAR	3	2	0	0	0
TOTAL					934.2

† Indicates number of workers in direct or close contact with HI-STAR 100.
†† Indicates actual duration of work in direct or close contact with HI-STAR 100.

Table 10.3.3
ESTIMATED EXPOSURES FOR HI-STAR 100 SYSTEM SURVEILLANCE AND MAINTENANCE (40,000MWD/MTU, 5-YEAR COOLED FUEL)

ACTIVITY	ESTIMATED PERSONNEL	ESTIMATED HOURS PER YEAR	ESTIMATED DOSE RATE (MREM/HR)	OCCUPATIONAL DOSE TO INDIVIDUAL (PERSON-MREM)	ESTIMATED TOTAL DOSE FOR TASK (PERSON-MREM)
SECURITY SURVEILLANCE	1	30	4	120	120
ANNUAL MAINTENANCE	2	15	50	750	1500

10.4 ESTIMATED COLLECTIVE DOSE ASSESSMENT

10.4.1 Controlled Area Boundary Dose for Normal Operations

10CFR72.104 [10.0.1] limits the annual dose to any real individual at the controlled area boundary to a maximum of 25 mrem to the whole body, 75 mrem to the thyroid, and 25 mrem for any other organ. This includes contributions from all uranium fuel cycle operations in the region.

It is not feasible to predict bounding controlled area boundary dose rates on a generic basis since radiation from plant and other sources; the location and the layout of an ISFSI; and the number and configuration of casks are necessarily site-specific. In order to compare the performance of the HI-STAR 100 System with the regulatory requirements, sample ISFSI arrays were analyzed in Chapter 5. These represent a full array of design basis fuel assemblies. Users are required to perform a site specific dose analysis for their particular situation in accordance with 10CFR72.212 [10.0.1]. The analysis must account for the ISFSI (size, configuration, fuel assembly specifics) and any other radiation from uranium fuel cycle operations within the region. Table 5.1.7 presents dose rates at various distance from sample ISFSI arrays for the design basis burnup and cooling time which results in the highest off-site dose for the combination of maximum burnup and minimum cooling times analyzed in Chapter 5. 10CFR72.106 [10.0.1] specifies that the minimum distance from the ISFSI to the controlled area boundary is 100 meters. Therefore this was the minimum distance analyzed in Chapter 5. As a summary of Chapter 5, Table 10.4.1 presents the annual dose results for a single cask at 100, 251, and 300 meters and a 2x5 array of HI-STAR 100 systems at 400 meters. These annual doses are based on a full array of design basis fuel with a burnup of 40,000 MWD/MTU and 5-year cooling. This burnup and cooling time combination conservatively bounds the allowable burnup and cooling times listed in the Technical Specifications. In addition, 100% occupancy (8760 hours) is conservatively assumed. In the calculation of the annual dose, a cask-to-cask pitch of 12 feet was assumed and the casks were positioned on an infinite slab of concrete to account for earth-shine effects. These results indicate that the calculated annual dose is less than the regulatory limit of 25 mrem/year at a distance of 300 meters for a single cask and at 400 meters for a 2x5 array of HI-STAR 100 Systems containing design basis fuel. The calculated annual dose is 25 mrem at 251 meters. These results are presented only as an illustration to demonstrate that the HI-STAR 100 System is in compliance with 10CFR72.104[10.0.1]. Neither the distances nor the array configurations become part of the Technical Specifications. Rather, users are required to perform a site specific analyses to demonstrate compliance with 10CFR72.104[10.0.1] contributors and 10CFR20[10.1.1]. A minor contributor to the minimum controlled area boundary is the normal storage condition leakage from the seal welded MPC. Although, leakage is not expected, Section 7.2 provides an analysis for the annual dose based on a continuous leak from the MPC equal to the tested leakage rate plus the minimum test sensitivity. The annual dose to an individual at the minimum controlled area boundary was computed to be 0.1 mrem to the whole body and less than 0.02 mrem to the thyroid for the worst case MPC. The site licensee is required to perform a site-specific dose evaluation of all dose contributors as part of the ISFSI design as dictated in Chapter 12. This evaluation will account for the location of the controlled area boundary and the effects of the radiation from uranium fuel cycle operations within the region.

10.4.2 Controlled Area Boundary Dose for Accident Conditions

10CFR72.106 [10.0.1] specifies that the maximum dose to any individual at the controlled area boundary can not exceed 5 rem to the whole body or any organ from any design basis accident. In addition, it is specified that the minimum distance from the ISFSI to the controlled area boundary be at least 100 meters.

Chapter 7 demonstrates that the resultant doses for a non-mechanistic postulated breach of the MPC confinement boundary at the regulatory minimum site boundary distance of 100 meters are less than 2.1 rem for an occupancy factor of 1 year (8760 hours). This clearly demonstrates that the HI-STAR 100 System is in full compliance with the regulatory limit of 5 rem specified in 10CFR72.106 [10.0.1] for the whole body or any organ.

Chapter 11 presents the results of the evaluations performed to demonstrate that the HI-STAR 100 System can withstand the effects of all credible accident conditions and natural phenomena without the corresponding radiation doses exceeding the requirements of 10CFR72.106 [10.0.1]. The accident events addressed in Chapter 11 include: HI-STAR 100 handling accident, tip-over, fire, tornado, flood, earthquake, 100 percent fuel rod rupture, confinement boundary leakage, explosion, lightning, burial under debris, and extreme environmental temperature. The worst-case shielding consequence of the accidents evaluated in Chapter 11 assumes that as a result of a fire, the neutron shield is completely destroyed and replaced by a void. The neutron shield is assumed to be completely lost, whereas some portion of the neutron shield would be expected to remain, as the neutron shield material is fire retardant. The shielding analysis of the HI-STAR 100 System with complete loss of the neutron shield is discussed in Section 5.1.2. The results in that section, show that the resultant dose rate at the 100-meter controlled area boundary would be less than 5 mrem/hr for a single HI-STAR 100 during the accident condition. At this level, it would take more than 1000 hours (41 days) for the dose at the controlled area boundary to reach 5 rem. This length of time greatly exceeds the time necessary to implement and complete the corrective actions outlined in Chapter 11. Therefore, the dose requirement of 10CFR72.106 [10.0.1] is satisfied.

Table 10.4.1
ANNUAL DOSE FOR ARRAYS OF HI-STAR 100
WITH DESIGN BASIS ZIRCALOY CLAD FUEL
40,000 MWD/MTU AND 5-YEAR COOLING

Array Configuration	**1 Cask**	**1 Cask**	**1 Cask**	**2x5 Array**
Annual Dose (mrem/year)[†]	345.00	25.00	13.55	23.06
Distance to Controlled Area Boundary (meters)[††], [†††]	100	251	300	400

† 100% occupancy is assumed.
†† Dose location is at the center of the long side of the array.
††† Actual controlled area boundary dose rates will be lower because the maximum permissible burnup for 5-year cooling as specified in the Technical Specifications is lower than the burnup analyzed for the design basis fuel used in this table.

10.5 REGULATORY COMPLIANCE

The HI-STAR 100 System provides radiation shielding and confinement features that are sufficient to meet the requirements of 10CFR72.104 and 10CFR72.106 [10.0.1].

Occupational radiation exposures satisfy the limits of 10CFR20 [10.1.1] and meet the objective of maintaining exposures ALARA.

The design of the HI-STAR 100 System is in compliance with 10CFR72 [10.0.1] and applicable design and acceptance criteria have been satisfied. The radiation protection system design provides reasonable assurance that the HI-STAR 100 System will allow safe storage of spent fuel.

10.6 REFERENCES

[10.0.1] *U.S. Code of Federal Regulations,* "Licensing Requirements for Independent Storage of Spent Nuclear Fuel and High-Level Radioactive Waste," Part 72, "*Energy.*"

[10.0.2] U.S. Nuclear Regulatory Commission, "Standard Review Plan for Dry Cask Storage Systems", NUREG-1536, Final Report, January 1997.

[10.1.1] *U.S. Code of Federal Regulations,* "Standards for protection Against Radiation," Part 20, "*Energy.*"

[10.1.2] U.S. Nuclear Regulatory Commission "Information Relevant to Ensuring that Occupational Radiation Exposures at Nuclear Power at Nuclear Power Stations will be As Low As Reasonably Achievable", Regulatory Guide 8.8, June 1978.

[10.1.3] U.S. Nuclear Regulatory Commission, "Operating Philosophy for Maintaining Occupational Radiation Exposures As low As is Reasonably Achievable", Regulatory Guide 8.10, Revision 1-R, May 1997.

CHAPTER 11: ACCIDENT ANALYSIS

This chapter presents the evaluation of the HI-STAR 100 System for the effects of off-normal and postulated accident conditions. The design basis off-normal and postulated accident events, including those resulting from mechanistic and non-mechanistic causes as well as those caused by natural phenomena, are identified in Sections 2.2.2 and 2.2.3. For each postulated event, the event cause, means of detection, consequences, and corrective action are discussed and evaluated. As applicable, the evaluation of consequences includes structural, thermal, shielding, criticality, confinement, and radiation protection evaluations for the effects of each design event.

The structural, thermal, shielding, criticality, and confinement features and performance of the HI-STAR 100 System are discussed in Chapters 3, 4, 5, 6, and 7, respectively. The evaluations provided in this chapter are based on the design features and evaluations described therein.

Chapter 11 is in full compliance with NUREG-1536; no exceptions are taken.

11.1 OFF-NORMAL OPERATIONS

During normal storage operations of the HI-STAR 100 System it is possible that an off-normal situation could occur. Off-normal operations, as defined in accordance with ANSI/ANS-57.9, are those conditions which, although not occurring regularly, are expected to occur no more than once a year. In this section, design events pertaining to off-normal operation for expected operational occurrences are considered.

The following off-normal operation events have been considered in the design of the HI-STAR 100, as listed in Subsection 2.2.2:

Off-Normal Pressures
Off-Normal Environmental Temperatures
Leakage of One MPC Seal Weld

For each event, the postulated cause of the event, detection of the event, analysis of the event effects and consequences, corrective actions, and radiological impact from the event are presented.

The results of the evaluations performed herein demonstrate that the HI-STAR 100 System can withstand the effects of off-normal events without affecting the design function, and are in compliance with the applicable acceptance criteria. The section demonstrates that no instruments or controls are required to remain operational under all credible off-normal conditions. The following sections present the evaluation of the HI-STAR 100 System for the design basis off-normal conditions which demonstrate that the requirements of 10CFR72.122 are satisfied, and that the corresponding radiation doses satisfy the requirements of 10CFR72.106(b) and 10CFR20.

The structural load combinations evaluated for off-normal conditions are defined in Table 2.2.14. The load combinations include both normal and off-normal loads. The off-normal load combination evaluations are discussed in Section 11.1.4.

11.1.1 Off-Normal Pressures

There are three pressure regions in the HI-STAR 100 System and they are the MPC internal, the MPC external/overpack internal, and the overpack external pressure regions. Off-normal pressure at these three locations is evaluated at the point at which they act. The MPC internal pressure effects the MPC internal cavity. The MPC external/overpack internal pressure effects the MPC exterior and the overpack internal cavity. The overpack external pressure effects the exterior of the overpack.

11.1.1.1 Postulated Cause of Off-Normal Pressure

The off-normal pressure for the MPC internal cavity is a function of the initial helium fill pressure and the temperature obtained with maximum decay heat load design basis fuel. The maximum off-normal environmental temperature is 100°F with full solar insolation. The MPC internal pressure is further increased by the conservative assumption that 10% of the fuel rods rupture, 100% of the fill gas, and fission gases per NUREG-1536 are released to the cavity.

There is no cause or postulated cause for an off-normal MPC external/overpack internal pressure. There is no cause or postulated cause for off-normal overpack external pressure. Therefore, no off-normal overpack external pressure or off-normal MPC external/overpack internal pressure is evaluated.

11.1.1.2 Detection of Off-Normal Pressure

The HI-STAR 100 System is designed to withstand the MPC off-normal pressure without any effects on its ability to meet its safety requirements. There is no requirement for detection of off-normal pressure in the MPC.

11.1.1.3 Analysis of Effects and Consequences of Off-Normal Pressure

Chapter 4 calculates the MPC internal pressure with an ambient temperature of 80°F, 10% fuel rods ruptured, full insolation, and maximum decay heat and reports the maximum value of 60.2 psig in Table 4.4.15 at an average calculated MPC cavity temperature of 499.2°K. Using this pressure, the off-normal temperature of 100°F (ΔT of 20°F or 11.1°K), and the ideal gas law, the off-normal resultant pressure is calculated to be below the normal condition MPC internal design pressure, as follows:

$$\frac{P_1}{P_2} = \frac{T_1}{T_2}$$

$$P_2 = \frac{P_1 T_2}{T_1}$$

$$P_2 = \frac{(60.2\,psig + 14.7)(499.2°K + 11.1°K)}{499.2°K}$$

$$P_2 = 76.6\,psia\ or\ 61.9\,psig$$

The normal condition MPC internal pressure of 100 psig (Table 2.2.1) has been established to bound the off-normal condition. Therefore, no additional analysis is required. The normal condition design pressure, which is equal to the off-normal design pressure, is analyzed in Chapter 3 for Load Case E1. The results in Chapter 3 show that the stress values are below the normal condition allowables.

Structural

The structural evaluation of the MPC enclosure vessel for off-normal design internal pressure conditions is equivalent to the evaluation at normal design internal pressures, since the normal design pressure was set at a value which would encompass the off-normal condition. Therefore, the resulting stresses from the off-normal design condition are equivalent to that of the normal design condition and are well within the allowable stress limits, as discussed in Section 3.4.

Thermal

The MPC internal pressure for off-normal conditions is calculated as presented above. As can be seen from the value calculated above, the 100 psig design basis internal pressure for off-normal conditions used in the structural evaluation bounds the calculated value.

Shielding

There is no effect on the shielding performance of the system as a result of this off-normal event.

Criticality

There is no effect on the criticality control features of the system as a result of this off-normal event.

Confinement

There is no effect on the confinement function of the MPC as a result of this off-normal event. As discussed in the structural evaluation above, all stresses remain within allowable values, assuring confinement boundary integrity.

Radiation Protection

Since there is no degradation in shielding or confinement capabilities as discussed above, there is no effect on occupational or public exposures as a result of this off-normal event.

Based on this evaluation, it is concluded that the off-normal pressure does not affect the safe operation of the HI-STAR 100 System.

11.1.1.4 Corrective Action for Off-Normal Pressure

The HI-STAR 100 System is designed to withstand the off-normal pressure without any effects on its ability to maintain safe storage conditions. There is no corrective action requirement for off-normal pressure.

11.1.1.5 Radiological Impact of Off-Normal Pressure

The event of off-normal pressure has no radiological impact because the confinement barrier and shielding integrity are not affected.

11.1.2 Off-Normal Environmental Temperatures

The HI-STAR 100 System is designed for use at any site in the contiguous United States. Off-normal environmental temperature extremes of -40 and 100 degrees F have been conservatively selected to bound off-normal temperatures at these sites. The off-normal temperature range affects the entire HI-STAR 100 System and must be evaluated against the allowable component design temperatures. This off-normal event is of a short duration and therefore, the resultant temperatures are evaluated against the accident condition temperature limits as listed in Table 2.2.3.

11.1.2.1 Postulated Cause of Off-Normal Environmental Temperatures

The off-normal environmental temperature is postulated as a constant ambient temperature caused by extreme weather conditions. To determine the effects of the off-normal temperatures, it is conservatively assumed that these temperatures persist for a sufficient duration to allow the HI-STAR 100 System to achieve thermal equilibrium. Because of the large mass of the HI-STAR 100 System with its corresponding large thermal inertia and the limited duration for the off-normal temperatures, this assumption is conservative.

11.1.2.2 Detection of Off-Normal Environmental Temperatures

The HI-STAR 100 System is designed to withstand the off-normal environmental temperatures without any effects on its ability to maintain safe storage conditions. There is no requirement for detection of off-normal environmental temperatures.

11.1.2.3 Analysis of Effects and Consequences of Off-Normal Environmental Temperatures

The off-normal event considering an environmental temperature of 100°F for a duration sufficient to reach thermal equilibrium is evaluated with respect to design temperatures listed in Table 2.2.3. The evaluation is performed with design basis fuel with the maximum decay heat and the most restrictive thermal resistance. The 100°F environmental temperature is applied with full solar insolation.

The HI-STAR 100 System maximum temperatures for components close to the design basis temperatures are listed in Tables 4.4.9 through 4.4.11. These temperatures are conservatively calculated at an environmental temperature of 80°F. The maximum off-normal environmental temperature is 100°F, which is an increase of 20°F. The bounding off-normal temperatures are calculated by adding 20°F to the maximum normal temperatures from the highest component

temperature from the MPC-68 or MPC-24. Table 11.1.1 lists the maximum off-normal temperatures. As illustrated by the table, all the maximum off-normal temperatures are well below the accident condition design basis temperatures. The off-normal environmental temperature is of a short duration (several consecutive days would be highly unlikely) and, therefore, the resultant temperatures are evaluated against short-term accident condition temperature limits. Under these conditions, the HI-STAR 100 System maximum off-normal temperatures meet the design requirements specified in Table 2.2.3.

In addition, the off-normal environmental temperature generates a pressure which is evaluated in Section 11.1.1. The off-normal MPC cavity pressure is less than the design basis normal/off-normal pressures listed in Table 2.2.1.

The off-normal event considering an environmental temperature of -40°F, no decay heat, and no solar insolation for a duration sufficient to reach thermal equilibrium is evaluated with respect to material design temperatures. The HI-STAR 100 System is conservatively assumed to reach -40°F throughout the structure. All structural analysis is performed at the material design basis temperature, which is set higher than the component would experience with the design basis heat load under normal conditions. Assuming the HI-STAR 100 System is -40°F would only serve to increase the safety margins as the material strength increases with decreasing temperatures. Subsection 3.1.2.3 details the structural analysis performed to evaluate brittle fracture at the lowest service temperature. Subsection 3.4.5 provides a structural evaluation of the effects of an environmental temperature of -40°F and demonstrates that there is no reduction in the performance of the HI-STAR 100 System. Based on this evaluation, it is concluded that the off-normal environmental temperatures do not affect the safe operation of the HI-STAR 100 System.

Structural

The effect on the MPC for the maximum off-normal temperature condition is an increase in the internal pressure. As shown in Section 11.1.1.3, the resultant pressure is well below the normal/off-normal design pressure of 100 psig used in the structural analysis. The effect of the minimum off-normal temperature conditions results in an evaluation of the potential for brittle fracture which is discussed in Section 3.1.2.3.

Thermal

The resulting off-normal system and fuel assembly cladding temperatures for the hot conditions are provided in Table 11.1.1. As can be seen from this table, all temperatures for off-normal conditions are within the short-term allowable values described in Table 2.2.3.

Shielding

There is no effect on the shielding performance of the system as a result of this off-normal event.

Criticality

There is no effect on the criticality control features of the system as a result of this off-normal event.

Confinement

There is no effect on the confinement function of the MPC as a result of this off-normal event.

Radiation Protection

Since there is no degradation in shielding or confinement capabilities as discussed above, there is no effect on occupational or public exposures as a result of this off-normal event.

Based on this evaluation, it is concluded that the specified off-normal environmental temperatures do not affect the safe operation of the HI-STAR 100 System.

11.1.2.4 Corrective Action for Off-Normal Environmental Temperatures

The HI-STAR 100 System is designed to withstand the off-normal environmental temperatures without any effects on its ability to maintain safe storage conditions. There are no corrective actions required for off-normal environmental temperatures.

11.1.2.5 Radiological Impact of Off-Normal Environmental Temperatures

Off-normal environmental temperatures have no radiological impact as the confinement barrier and shielding integrity are not affected.

11.1.3 Leakage of One Seal

The HI-STAR 100 System has multiple boundaries to contain radioactive fission products within the confinement boundary and the helium atmosphere within the helium retention boundary (overpack internal cavity). The radioactive material confinement boundary is defined by the MPC shell, baseplate, MPC lid, and vent and drain cover plates. The closure ring provides a redundant welded closure to prevent the release of radioactive material from the MPC cavity. Confinement boundary welds, including the MPC lid-to-shell weld, are inspected by radiography or ultrasonic examination except for field welds on the closure ring and vent/drain port cover plates. The closure ring and vent/drain port cover plates are examined by the liquid penetrant method on the root (for multi-pass welds) and final pass. The welds on the MPC lid, vent and drain port covers are leakage tested. The MPC is also hydrostatically tested.

An additional redundant boundary to the release of radioactive materials is provided by the overpack helium retention boundary which is formed by the overpack bottom plate, inner shell, top flange, closure plate, closure plate bolts, inner metallic seal, and port plugs/seals. The overpack helium retention boundary welds are inspected by radiography. Vent and drain ports penetrate the helium retention boundary and are sealed by a port plug with a metallic seal. The closure plate inner seal, and the vent and drain port plug seals are helium leak tested following each loading.

The MPC lid-to-MPC shell weld is postulated to fail to confirm the safety of the HI-STAR 100 confinement boundary. The failure of the MPC lid weld is equivalent to the MPC drain or vent port cover weld failing. The MPC lid-to-shell weld has been chosen because it is the main closure weld for the MPC. It is extremely unlikely that the volumetric (or multi-layer liquid penetrant) inspection and helium leak test would fail to detect a poor welded seal. The MPC lid weld failure affects the MPC confinement boundary; however, no leakage will occur.

11.1.3.1 Postulated Cause of Leakage of One Seal in the Confinement Boundary

Failure of the MPC confinement boundary is highly unlikely. The MPC confinement boundary is shown to withstand all normal, off-normal, and accident conditions. There are no credible conditions which could damage the integrity of the MPC confinement boundary. The weld between the MPC lid and MPC shell is liquid penetrant inspected on the root and final pass, volumetrically (or multi-layer PT) examined, hydrostatically tested, and helium leak tested. The initial integrity of the closure welds will be maintained throughout the design life because the MPC is stored within an inert atmosphere within the overpack. Failure of the MPC lid weld would require all of the following:

1. Improper weld by a qualified welding machine or welder using approved welding procedures.

2. Failure to detect the unacceptable indication during the liquid penetrant inspections performed by a qualified inspector in accordance with approved procedures.

3. Failure to detect the unacceptable indication during the volumetric inspections performed by a qualified inspector in accordance with approved procedures.

4. Failure to detect the unacceptable leak during the hydrostatic test performed by qualified personnel in accordance with approved procedures.

5. Failure of the qualified leakage test equipment and personnel to detect the leak in accordance with approved procedures.

The evaluation of the failure of the MPC lid weld has been postulated to demonstrate the safety of the HI-STAR 100 confinement system and cannot be derived from a credible loading condition.

11.1.3.2 Detection of Leakage of One Seal in the Confinement Boundary

The HI-STAR 100 System is designed to withstand the leakage of any single field weld in the confinement boundary without any effects on its ability to meet its safety requirements. There is no requirement for detection of leakage of one seal and no means are provided to detect leakage.

11.1.3.3 Analysis of Effects and Consequences of Leakage of One Seal in the Confinement Boundary

If the MPC lid seal weld were to fail, the MPC closure ring would retain the design pressure. The analysis of the MPC closure ring's ability to retain the design pressure is provided in Appendix 3.E. The consequences of the MPC lid seal weld failure are that the MPC closure ring maintains the integrity of the confinement boundary.

Structural

The stress evaluation of the closure ring is discussed in Appendix 3.E. All stresses are within the allowable values.

Thermal

There is no effect on the thermal performance of the system as a result of this off-normal event.

Shielding

There is no effect on the shielding performance of the system as a result of this off-normal event.

Criticality

There is no effect on the criticality control features of the system as a result of this off-normal event.

Confinement

There is no effect on the confinement function of the MPC as a result of this off-normal event.

Radiation Protection

Since there is no degradation in shielding or confinement capabilities as discussed above, there is no effect on occupational or public exposures as a result of this off-normal event.

Based on this evaluation, it is concluded that the specified off-normal leakage of one seal event does not affect the safe operation of the HI-STAR 100 System.

11.1.3.4 Corrective Action for Leakage of One Seal in the Confinement Boundary

There is no corrective action required for the leakage of one seal in the confinement boundary. Leakage of one seal in the confinement boundary does not affect the HI-STAR 100 System's ability to operate safely.

11.1.3.5 Radiological Impact of Leakage of One Seal in the Confinement Boundary

The off-normal event of leakage of one seal in the confinement boundary has no radiological impact because the confinement barrier is not breached and shielding is not affected.

11.1.4 Off-normal Load Combinations

Structural load combinations for off-normal conditions are provided in Table 2.2.14. The load combinations include normal loads with the off-normal loads. The load combination results are shown in Section 3.4 to meet all allowable values.

Table 11.1.1

MAXIMUM TEMPERATURES CAUSED BY OFF-NORMAL ENVIRONMENTAL TEMPERATURES [°F]

Temperature Location	**Normal**	**Calculated Off-Normal**	**Design Basis Limits (short-term)**
Fuel cladding	741† (5-yr cooling)	761 (5-yr cooling)	1058 short-term
MPC basket	725†	745	950 short-term
MPC outer shell surface	332††	352	450 long-term
MPC/overpack helium gap outer surface	292†,††	312	450 long-term
Neutron shield inner surface	274††	294	300 long-term
Overpack shell outside surface	229††	249	350 long-term

† MPC-68 normal storage maximum temperatures from Table 4.4.11.

†† MPC-24 normal storage maximum temperatures from Table 4.4.10.

11.2 ACCIDENTS

Accidents, in accordance with ANSI/ANS-57.9, are either infrequent events that could reasonably be expected to occur during the lifetime of the HI-STAR 100 System or events postulated because their consequences may affect the public health and safety. Section 2.2.3 defines the design basis accidents considered. By analyzing for these design basis events, safety margins inherently provided in the HI-STAR 100 System design can be quantified.

The results of the evaluations performed herein demonstrate that the HI-STAR 100 System can withstand the effects of all credible accident conditions and natural phenomena without affecting safety function, and are in compliance with the acceptable criteria. The section demonstrates that no instruments or controls are required to remain operational under all credible accident conditions. The following sections present the evaluation of the design basis postulated accident conditions and natural phenomena which demonstrate that the requirements of 10CFR72.122 are satisfied, and that the corresponding radiation doses satisfy the requirements of 10CFR72.106(b) and 10CFR20.

The structural load combinations evaluated for postulated accident conditions are defined in Table 2.2.14. The load combinations include normal loads with the accident loads. The accident load combination evaluations are provided in Section 3.4.

11.2.1 Handling Accident

11.2.1.1 Cause of Handling Accident

During the operation of the HI-STAR 100 System, the loaded overpack is transported to the ISFSI in the vertical or horizontal position. The loaded overpack is typically transported by a heavy-haul vehicle which cradles the overpack horizontally or holds the overpack vertically. The height of the loaded overpack above the ground shall be limited to below the handling height limit specified in Table 2.2.17 to limit the inertia loading on the cask in a vertical or horizontal drop to 60g's or less. Although a handling accident is remote, a cask drop from the handling height limit is a credible accident.

11.2.1.2 Handling Accident Analysis

The handling accident analysis evaluates the effects of dropping the loaded overpack in the horizontal and vertical positions. The analysis of the handling accident is provided in Chapter 3. The analysis shows that the HI-STAR 100 System meets all structural requirements and that there is no adverse effect on the confinement, thermal or subcriticality performance of the cask. The vertical drop has no adverse consequences on the shielding analysis. Limited localized damage to the overpack outer enclosure shell and neutron shield in the area of impact may occur as a result of a side drop. Limiting the inertia loading to 60g's or less under the horizontal or vertical drop orientations ensures the fuel cladding remains intact based on dynamic impact effects on spent fuel assemblies literature [11.2.1].

Structural

Appendix 3.A calculates the maximum deceleration of the HI-STAR 100 System as a result of a free drop from the vertical and horizontal handling height limits. For both the vertical and horizontal drops of the HI-STAR 100 System onto the ISFSI pad, the analysis presented in Appendix 3.A demonstrates that the deceleration remains below 60g's. The structural analyses of the MPC and overpack under 60g vertical and radial loads are presented Section 3.4 and it is demonstrated therein that the allowable stresses are within allowable limits.

Thermal

As the structural analysis demonstrates that there is no change in the MPC or overpack except for localized damage to the radial neutron shield of the overpack, there is a negligible effect on the thermal performance of the system as a result of this event.

Shielding

Localized damage of the radial neutron shield may result from the side drop. The damage will be limited to the impacted area.

Criticality

There is no effect on the criticality control features of the system as a result of this event.

Confinement

There is no effect on the confinement function of the MPC as a result of this event. As discussed in the structural evaluation above, all stresses remain within allowable values, assuring confinement boundary integrity.

Radiation Protection

Since there is a very localized reduction in shielding and no effect on the confinement capabilities as discussed above, there is a negligible effect on occupational or public exposures as a result of this event.

Based on this evaluation, it is concluded that the vertical and horizontal drop of the HI-STAR Overpack with the MPC inside from the handling height limits in the Technical Specifications does not affect the safe operation of the HI-STAR 100 System.

11.2.1.3 Handling Accident Dose Calculations

The side drop handling accident could cause localized damage to the neutron shield and outer enclosure shell as the neutron shield will impact upon the impact surface. If the neutron shield is damaged, the overpack surface dose rate in the affected area could increase. However, there should be no noticeable increase in the ISFSI site or controlled area boundary dose rate, because the

affected area will likely be small. Once the overpack is uprighted, some local dose increase could occur. The cask's post-accident shielding analysis analyzed in Chapter 5 assumes complete loss of the neutron shield and bounds the dose rates anticipated for the handling accident.

The maximum effect on the overpack metallic body from a handling accident would be slight denting of a localized area. This will have a negligible effect on the gamma shielding of the HI-STAR 100 System.

The analysis of the handling accident has shown that the MPC confinement barrier will not be compromised and, therefore, there will be no release of radioactivity. Any possible rupture of the fuel cladding will have no affect on the site boundary dose rates because the magnitude of the radiation source has not changed. The radiological effects of 100% fuel cladding failure are analyzed in Chapter 7.

11.2.1.4 Handling Accident Corrective Action

Following a handling accident, the ISFSI operator shall first perform a radiological and visual inspection to determine the extent of the damage to the overpack. As appropriate, place temporary shielding around the HI-STAR overpack to reduce dose rates. Special handling procedures will be developed and approved by the ISFSI operator to lift and upright the overpack. Upon uprighting, the portion of the overpack not previously accessible shall be radiologically and visually inspected. If damage to the neutron shield is limited to local penetration or crushing, local repairs can be performed to repair the outer enclosure shell and to replace the damaged neutron shield material. If damage to the neutron shield is extensive, the damage shall be repaired and retested in accordance with the shielding effectiveness test in Chapter 9.

To determine if the MPC confinement boundary has been damaged, the following procedure shall be utilized to obtain a gas sample from the overpack cavity. Based on the damage sustained by the overpack, the procedure may be performed on the overpack vent or drain port.

1. Establish a radiological boundary around the overpack port to be sampled.

2. Remove the port cover plate. Attach the backfill tool (see Chapter 8) and measure annulus gas pressure.

3. Attach an evacuated sample bottle to the backfill tool and withdraw a gas sample from the overpack annulus.

4. Using the backfill tool, re-install the port plug with a new seal.

5. If the gas sample is determined to be clean, evacuate the overpack cavity and backfill the cavity with helium to the pressure specified for the overpack cavity. Proceed to Step 7.

6. If the sample indicates the presence of radioactive gas, the MPC confinement boundary has been breached. Vent the gas through a HEPA filter. Evacuate the overpack cavity and backfill the cavity with helium to the pressure specified for the MPC cavity. The overpack cavity is now defined as the confinement boundary. Proceed to Step 7.

7. Perform a containment system periodic verification leak test on the overpack seals. After satisfactory leak testing and any required repair of the neutron shield, the HI-STAR 100 System can be returned to service.

If upon inspection of the damaged overpack, extensive structural damage of the overpack is observed, the HI-STAR 100 overpack is to be returned to the facility for fuel unloading in accordance with Chapter 8. After unloading, the structural damage of the HI-STAR 100 System shall be assessed and a determination shall be made if repairs will enable the HI-STAR 100 System to return to service. Subsequent to the repairs, the HI-STAR 100 System shall be inspected and appropriate tests shall be performed to certify the HI-STAR 100 System for service. If the HI-STAR 100 System cannot be repaired and returned to service, the HI-STAR 100 System shall be disposed of in accordance with the appropriate regulations.

11.2.2 Tip-Over

11.2.2.1 Cause of Tip-Over

The analysis of the HI-STAR 100 System has shown that the cask does not tip over as a result of the accidents (i.e., tornado missiles, flood water velocity, and seismic activity) analyzed in this section. It is highly unlikely that the cask will tip-over during on-site movement because of the low handling height limit. The tip-over accident is stipulated as a non-mechanistic accident.

11.2.2.2 Tip-Over Analysis

The tip-over accident analysis evaluates the effects of the loaded overpack tipping-over onto a reinforced concrete pad. The tip-over analysis is provided in Chapter 3. The analysis shows that the HI-STAR 100 System meets all structural requirements and there is no adverse effect on the confinement, thermal, or subcriticality performance of the cask. However, the tip-over could cause some damage to the overpack outer enclosure shell and neutron shield in the area of impact.

Structural

Appendix 3.A calculates the maximum deceleration of the HI-STAR 100 System as a result of a non-mechanistic tip-over. For tip-over analysis of the HI-STAR 100 System onto the ISFSI pad, the analysis presented in Appendix 3.A demonstrates that the deceleration of the MPC remains below 60g's. The structural analyses of the MPC and overpack under a 60g radial load are presented Section 3.4 and it is demonstrated therein that the allowable stresses are within allowable limits.

Thermal

As the structural analysis demonstrates that there is no change in the MPC or overpack except for localized neutron shield damage, there is a negligible effect on the thermal performance of the system as a result of this event.

Shielding

Localized damage of the radial neutron shield is to be expected as a result of the tip-over. The damage will be limited to the impacted area.

Criticality

As the structural analysis demonstrates that there is no change in the MPC or overpack, there is a negligible effect on the criticality control features of the system as a result of this event.

Confinement

There is no effect on the confinement function of the MPC as a result of this event. As discussed in the structural evaluation above, all stresses remain within allowable values, assuring confinement boundary integrity.

Radiation Protection

Since there is a very localized reduction in shielding and no effect on the confinement capabilities as discussed above, there is a negligible effect on occupational or public exposures as a result of this event.

Based on this evaluation, it is concluded that the non-mechanistic tip-over of the HI-STAR 100 System does not affect its safe operation.

11.2.2.3 Tip-Over Dose Calculations

The tip-over accident could cause localized damage to the neutron shield and outer enclosure shell where the neutron shield impacts the ISFSI pad. The gamma shielding will not be affected. The overpack surface dose rate in the affected area could increase due to damage of the neutron shield. However, there should be no noticeable increase in the ISFSI site or controlled area boundary dose rate, because the affected areas will likely be small. Once the overpack is uprighted, some local dose increase could occur. The cask post-accident shielding analysis in Chapter 5 assumes complete loss of the neutron shield and bounds the dose rates anticipated for the tip-over accident. The analysis of the tip-over accident has shown that the MPC confinement barrier will not be compromised and, therefore, there will be no release of radioactivity.

11.2.2.4 Tip-Over Accident Corrective Action

The handling accident corrective action procedure outlined in Subsection 11.2.1.4 is applicable for the recovery of the tip-over accident.

11.2.3 Fire

11.2.3.1 Cause of Fire

Although the probability of a fire accident affecting a HI-STAR 100 System during storage operations is low due to the lack of combustible materials at the ISFSI, a fire resulting from an on-site transporter fuel tank contents is postulated and analyzed. The analysis shows that the HI-STAR 100 System continues to perform its structural, confinement, and subcriticality functions.

11.2.3.2 Fire Analysis

The thermal environment to which the HI-STAR 100 System would be exposed under a hypothetical fire accident is specified to be the same as that required in 10CFR71.73(c)(4). The overpack surfaces are therefore considered to receive an incident thermal radiation and convective heat flux from an ambient 1475°F fire condition environment. The duration of fire resulting from an on-site transporter fuel tank spill is calculated as follows:

Volume of Fuel (V) = 50 gallons (6.68 ft^3) (Specified by Subsection 2.2.3.3)

Overpack Baseplate (D_i) = 83-1/4" (6.9375 ft) (Overpack Drawing, Section 1.5)

Fuel Spill Ring Width (L) = 1 meter (IAEA Specification [11.2.6])

$$\text{Fuel Spill Diameter}(D_o) = 83 - 1/4" + 2m \times \frac{1"}{0.0254m}$$
$$= 161.99" \ (13.4991 \text{ ft})$$

$$\text{Fuel Spill Area}(A) = \frac{\pi}{4}(D_o^2 - D_i^2)$$
$$= 105.3 \text{ ft}^2$$

$$\text{Spill Depth}(d) = \frac{V}{A} = \frac{6.68}{105.3}$$
$$= 0.0634 \text{ ft } (0.761")$$

Fuel Consumption Rate (R) = 0.15 inch/min ([11.2.7])

$$\text{Fire Duration} = \frac{d}{R} = \frac{0.761}{0.15}$$
$$= 5.075 \text{ min } (305 \text{ seconds})$$

Within this time period, the cask outside surface and its contents will undergo a transient temperature rise due to the heat absorbed from the fire. Full effects of insolation before, during, and after the fire are included in the HI-STAR 100 System transient analysis. During the postulated fire event, the neutron shield material is exposed to high temperatures. Therefore, conservatively, an upper bound material thermal conductivity is assumed during the fire to maximize heat input to the cask. During the post-fire cooldown phase, no credit is taken for conduction through the neutron shield. The temperature history of a number of critical points in the HI-STAR 100 System transient fire analysis are tracked during the fire and the subsequent relaxation of temperature profiles during the post-fire cooldown phase. The impact of transient temperature excursions on HI-STAR 100 System materials is assessed in this section. During the fire, a cask surface emissivity specified in 10CFR71.73(b)(4) is applied to maximize radiant heat input. Destruction of the paint covering the external cask surfaces due to exposure to intense heat during fire is a credible possibility. Therefore, a lower emissivity of the exposed carbon steel surface is conservatively applied for post-fire cooldown analysis. This approach provides a conservatively bounding response of the HI-STAR 100 System to the fire accident condition.

Heat input from the fire to the HI-STAR 100 System is from a combination of radiation and convection heat transfer to all overpack exposed surfaces. This can be expressed by the following equation:

$$q_F = h_{fc}\left(T_F - T_S\right) + 0.1714\varepsilon\left[\left(\frac{T_F + 460}{100}\right)^4 - \left(\frac{T_S + 460}{100}\right)^4\right]$$

where:

q_F = surface heat input flux (Btu/ft^2-hr)

T_F = fire condition temperature (1475°F)

T_S = transient surface temperature (°F)

h_{fc} = forced convection heat transfer coefficient [Btu/ft^2-hr-°F]

ε = surface emissivity = 0.9 (per 10CFR71)

The forced convection heat transfer coefficient is calculated to bound the convective heat flux contribution to the exposed cask surfaces due to fire induced air flow. For the case of air flow past a heated cylinder, Jacob [11.2.3] recommends the following correlation for convective heat transfer obtained from experimental data:

$$Nu_{fc} = 0.028\,\mathrm{Re}^{0.8}\left[1 + 0.4\left(\frac{L_{st}}{L_{tot}}\right)^{2.75}\right]$$

where:

L_{tot} = length traversed by flow

L_{st} = length of unheated section

K_f = thermal conductivity of air evaluated at the average film temperature

Re = flow Reynolds Number based on L_{tot}

Nu_{fc} = Nusselt Number (h_{fc} L_{tot}/K_f)

A consideration of the wide range of temperatures to which the exposed surfaces are subjected during fire and the temperature dependent trend of air properties requires a careful selection of parameters to determine a conservatively large bounding value of the convective heat transfer coefficient. Table 11.2.1 provides a summary of parameter selections with justifications which provide the basis for application of this correlation to determine the forced convection heating of the HI-STAR 100 System during this short-term fire event.

After the fire event, the outside environment temperature is restored to initial ambient conditions and the HI-STAR 100 System transient analysis is continued, to evaluate temperature peaking in the interior during the post-fire cooldown phase. Heat loss from the outside exposed surfaces of the overpack is determined by the following equation:

$$q_S = 0.19(T_S - T_A)^{4/3} + 0.1714\varepsilon\left[\left(\frac{T_S + 460}{100}\right)^4 - \left(\frac{T_A + 460}{100}\right)^4\right]$$

where:

q_s= surface heat loss flux (Btu/ft^2-hr)

T_S = transient surface temperature (°F)

T_A = ambient temperature (100°F)

ε = surface emissivity of exposed carbon steel surface

The FLUENT thermal analysis model was used to perform the fire condition transient analysis. Based on this analysis, the maximum temperature attained in different portions of the cask during the fire followed by a post-fire cooldown are summarized in Table 11.2.2. From the results, it is apparent that due to the large bulk mass and long radial path lengths for flow of heat, the MPC basket centerline temperatures are relatively unaffected by this short duration fire event. However, the overpack enclosure shell and neutron shield material in its immediate vicinity experience a significant temperature increase. The short-duration temperature rise experienced by the periphery of the neutron shield may result in partial loss of its ability to shield neutrons. The neutron shields' inner surface peak transient temperature at the hottest spatial location (314°F) is slightly higher than the 300°F long-term temperature limit. This short-term elevated temperature exposure, lasting for a few hours, is not expected to significantly degrade the neutron shield materials shielding function at this location. A pressure relief system is provided on the overpack outer enclosure shell to prevent any overpressurization in the neutron shield region during the fire event. Figures 11.2.1 through 11.2.3 plot the transient temperature-time history of HI-STAR 100 components identified as

significant for fire accident performance evaluation. Figure 11.2.4 provides an axial temperature plot of the hottest rod in the post-fire cooldown.

Increased pressure of the MPC due to the temperature rise is also considered. From the maximum temperature rise of the MPC during the post-fire cooldown phase, maximum average MPC cavity temperatures are calculated by adding this temperature increment to the initial condition (before start of fire) MPC cavity average temperature for each MPC and applying the ideal gas law. The initial condition MPC cavity average temperatures and pressures have been determined by analytical methods described in Chapter 4. Maximum fire accident pressures in the MPC cavity based on a conservatively bounding 216°F (120°C) MPC cavity temperature rise are reported in Table 11.2.3. Maximum pressure calculations include a 100% fuel rod rupture condition (including hypothetical BPRA rods rupture for PWR fuel) and conservatively determined rod fill gas and fission gases release into the MPC cavity. As can be seen by Table 11.2.3, the pressure does not exceed the accident condition design basis pressure listed in Table 2.2.1.

To ensure the fuel assemblies can be retrieved by normal means and the fuel arrangement remains subcritical, the MPC fuel basket is shown to be unconstrained for thermal expansion. Table 11.2.5 provides the HI-STAR 100 component temperatures in the post-fire cooldown phase. Using these temperatures, Appendix 3.AD demonstrates that the thermal expansion of the MPC fuel basket is unconstrained.

Structural

As discussed above, there are no structural consequences as a result of the fire accident condition.

Thermal

As discussed above, the MPC internal pressure, based on a conservatively bounding fire condition temperature rise and a bounding non-mechanistic 100% fuel rod rupture accident described in Section 11.2.9, remains below accident condition design pressure. As shown in Table 11.2.2, the peak fuel cladding and material temperatures are well below short-term accident condition allowable temperatures of Table 2.2.3.

Shielding

The assumed complete loss of all the radial neutron shield in the shielding analysis results in an increase in the radiation dose rates at locations adjacent to the neutron shield. The shielding analysis results presented in Section 5.1.2 demonstrate that the requirements of 10CFR72.106 are not exceeded.

Criticality

There is no effect on the criticality control features of the system as a result of this event.

Confinement

There is no effect on the confinement function of the MPC as a result of this event.

Radiation Protection

There is no degradation in confinement capabilities of the MPC, as discussed above. There are increases in the dose rates adjacent to the neutron shield. The dose rate at 1 meter from the neutron shield after the neutron shield is replaced by a void is calculated to be less than 500 mrem/hr (Table 5.1.9). Immediately after the fire accident a radiological inspection of the HI-STAR overpack will be performed and temporary shielding installed to limit the exposure to the public. Based on a minimum distance to the controlled area boundary of 100 meters, the dose rate at the controlled area boundary will be less than 5 mrem/hr. Therefore, it is evident that the requirements of 10CFR72.106 (5 Rem) will not be exceeded.

11.2.3.3 Fire Dose Calculations

The analysis of the fire accident shows that the confinement boundary is not compromised and therefore there is no release of radioactive material. The complete loss of the overpack's radial neutron shield is assumed in the shielding analysis for the post-accident HI-STAR 100 System in Chapter 5. The HI-STAR 100 System following a fire accident meets the dose rate requirements of 10CFR72.106. The seals on the overpack will be exposed to short-term high temperature excursions which remain below the maximum design accident temperature limits listed in Table 2.2.3. However, as no radioactive materials are present in the annulus, the loss of the helium retention boundary will have no radiological impact.

11.2.3.4 Fire Accident Corrective Actions

Upon detection of a fire, the ISFSI operator shall take the appropriate immediate corrective actions necessary to extinguish the fire. Fire fighting personnel should take appropriate radiological precautions as the neutron shielding may be damaged and an increased radiation dose could result.

Following the termination of the fire, a visual and radiological inspection of the overpack shall be performed. Specific attention shall be taken during the inspection of the neutron shield. As appropriate, place temporary shielding around the HI-STAR overpack to reduce local dose rates.

If damage to the neutron shield is limited to a localized area, local repairs can be performed to replace the damaged neutron shield material. If damage to the neutron shield is widespread and/or radiological conditions require, the overpack shall be unloaded in accordance with Chapter 8, prior to repair of the neutron shield.

To verify the continued presence of the helium atmosphere within the overpack cavity, perform the procedure specified in Subsection 11.2.1.4.

Following replacement of the neutron shield material, performance of the shielding effectiveness test per Chapter 9, verification of the appropriate helium atmosphere, and leakage testing of the helium retention boundary seals, the overpack shall be certified to return the overpack to service.

11.2.4 Partial Blockage of MPC Basket Vent Holes

Each MPC basket fuel cell wall has elongated vent holes at the bottom and top. The partial blockage of the MPC basket vent holes analyzes the effects on the HI-STAR 100 System due to the restriction of the vent holes.

11.2.4.1 Cause of Partial Blockage of MPC Basket Vent Holes

After the MPC is loaded with spent nuclear fuel, the MPC cavity is drained, vacuum dried, and backfilled with helium. There are only two possible sources of material which could block the MPC basket vent holes. These are fuel cladding/fuel pellets and crud. It is not credible that the fuel cladding would rupture, and that fuel cladding and fuel pellets would fall to block the basket vent holes. Fuel assemblies classified as damaged or fuel debris will be placed in damaged fuel containers prior to placement in MPCs. The damaged fuel container will ensure that fuel cladding and fuel pellets would fall to block the basket vent holes. It is credible that a percentage of the crud deposited on the fuel rods may fall off and deposit at the bottom of the MPC.

Helium in the MPC cavity provides an inert atmosphere for storage of the fuel. The HI-STAR 100 System maintains the peak fuel cladding temperature below the specified limits. There are no credible accidents which could cause the fuel assembly to experience an inertia loading greater than 60g's. Therefore, there is no mechanism for the extensive rupture of spent fuel rod cladding and resultant loss of fuel pellets to the cavity.

Crud can be made up of two types of layers, loosely adherent and tightly adherent. The SNF movement from the fuel racks to the MPC may cause a portion of the loosely adherent crud to fall away. The tightly adherent crud will not be removed during ordinary fuel handling operations.

The amount of crud on fuel assemblies varies greatly from plant to plant and assembly type. Typically, BWR plants and fuel have more crud than PWR plants. Based on the maximum expected crud volume per fuel assembly provided in reference [11.2.2], and the area at the base of the MPC basket fuel storage cell, the maximum depth of crud at the bottom of the MPC-68 was determined. For the MPC-24, 90% of the maximum crud volume per fuel assembly was used to determine the crud depth. The maximum crud depths calculated for each of the MPCs are listed in Table 2.2.8. The maximum amount of crud was assumed to be present on all fuel assemblies within the MPC. Both the tightly and loosely adherent crud was conservatively assumed to fall off of the fuel assembly. As can be seen by the values listed in the table, the maximum amount of crud depth blocks less than 50% of the MPC basket vent hole.

11.2.4.2 Partial Blockage of MPC Basket Vent Hole Analysis

The partial blockage of the MPC basket vent holes has no affect on the structural, thermal, and confinement analysis. There is no affect on the shielding analysis other than a slight increase of the gamma radiation dose rate at the base of the MPC. As the MPC basket vent holes are not completely blocked, preferential flooding of the MPC fuel basket is not possible and, therefore, the criticality analyses are not affected.

Structural

There are no structural consequences as a result of this event.

Thermal

There is no effect on the thermal performance of the system as a result of this event.

Shielding

There is no effect on the shielding performance of the system as a result of this event.

Criticality

There is no effect on the criticality control features of the system as a result of this event.

Confinement

There is no effect on the confinement function of the MPC as a result of this event.

Radiation Protection

Since there is no degradation in shielding or confinement capabilities as discussed above, there is no effect on occupational or public exposures as a result of this event.

Based on this evaluation, it is concluded that the partial blockage of MPC vent holes does not affect the safe operation of the HI-STAR 100 System.

11.2.4.3 Partial Blockage of MPC Basket Vent Holes Dose Calculations

Partial blockage of basket vent holes will not cause loss of the confinement boundary. Therefore, there will be no effect on the controlled area boundary dose rates because the magnitude of the radiation source has not changed. There will be no radioactive release.

11.2.4.4 Partial Blockage of MPC Basket Vent Holes Corrective Action

There are no consequences which exceed normal storage conditions for this accident. No corrective action is required for the partial blockage of the MPC basket vent holes.

11.2.5 Tornado

11.2.5.1 Cause of Tornado

The HI-STAR 100 System will be stored on an unsheltered ISFSI concrete pad and subject to environmental conditions. It is possible that the HI-STAR 100 System may experience the extreme environmental conditions of a tornado.

11.2.5.2 Tornado Analysis

The tornado accident has two effects on the HI-STAR 100 System. The tornado winds or tornado missile attempts to tip-over the loaded overpack with high velocity winds exerting a pressure loading or the potential impact of large tornado missiles striking the overpack. The second effect is tornado missiles propelled by high velocity winds which attempt to penetrate the overpack helium retention boundary and damage the shielding.

Chapter 3 provides the analysis of the pressure loading which attempts to tip-over the overpack and the analysis of the effects of the different types of tornado missiles. These analyses show that the loaded overpack does not tip-over as a result of the tornado winds or tornado missiles. The analyses also show that the overpack helium retention boundary is not compromised and only minor shielding damage will be incurred as a result of the tornado missile. The tornado accident had no adverse consequences on the structural, confinement, thermal, or criticality control capabilities of the HI-STAR 100 System.

Structural

Section 3.4 and Appendix 3.C provide the analysis of the pressure loading which attempts to tip-over the storage overpack and the analysis of the effects of the different types of tornado missiles. These analyses show that the loaded storage overpack does not tip-over as a result of the tornado winds and/or tornado missiles.

Analyses provided in Section 3.4 and Appendix 3.G also show that the tornado missiles do not penetrate the overpack helium retention boundary. The result of the tornado missile impact on the overpack is limited to localized damage of the shielding.

Thermal

There is no effect on the thermal performance of the system as a result of this event.

Shielding

The shielding analysis results presented in Section 5.1.2 demonstrate that the requirements of 10CFR72.106 are not exceeded.

Criticality

There is no effect on the criticality control features of the system as a result of this event.

Confinement

There is no effect on the confinement function of the MPC as a result of this event.

Radiation Protection

There is no degradation in confinement capabilities of the MPC, since the tornado missiles do not penetrate the overpack and impact the MPC. There may be increases in the local dose rates adjacent to the impact point of the tornado missile. However, this very localized effect will have no effect on the site boundary dose rate. Therefore, it is evident that the requirements of 10CFR72.106 (5 Rem) will not be exceeded.

11.2.5.3 Tornado Dose Calculations

The tornado winds do not tip-over the loaded overpack, damage the shielding materials or the confinement boundary. There is no affect on the radiation dose as a result of the tornado winds. A tornado missile may cause a very localized reduction in the neutron shielding. However, the damage shall have a negligible effect on the controlled area boundary dose and the effects of the tornado missile damage is bounded by the post-accident dose assessment performed in Chapter 5.

11.2.5.4 Tornado Accident Corrective Action

Following exposure of the HI-STAR 100 System to a tornado, the ISFSI operator shall perform a visual and radiological inspection of the overpack. Damage sustained by the neutron shield shall be repaired in accordance with Subsection 11.2.3.4.

11.2.6 Flood

11.2.6.1 Cause of Flood

The HI-STAR 100 System will be located on an unsheltered ISFSI concrete pad. Therefore, it is possible for the storage area to be flooded. The potential sources for the flood water could be unusually high water from a river or stream, a dam break, a seismic event, or a hurricane.

11.2.6.2 Flood Analysis

The flood accident does not adversely affect the criticality, confinement, shielding, or thermal capabilities of the HI-STAR 100 System. The structural analysis shows that the overpack helium retention boundary, and consequently the MPC confinement boundary maintains full integrity. The criticality analysis for normal fuel loading operations with the cask submerged is more reactive. The flood water acts as a radiation shield and will reduce the radiation doses. The thermal consequences of the flood is an increase in the rejection of the decay heat. Since the flood water temperature will be within the off-normal temperature range specified in Table 2.2.2, the thermal transient associated with the initial contact of the flood water with the overpack exterior surface will be bounded by the off-normal operation conditions.

The flood accident affects the HI-STAR 100 System structural analysis in two ways. First, the flood water velocity acts to apply force and an overturning moment which attempts to cause sliding or tip-over of the loaded overpack. Secondly, the flood water depth applies an external pressure to the overpack. Chapter 3 provides the analysis of both of these conditions. The results of the analysis show that the overpack helium retention boundary is not affected, and that the loaded overpack does not slide or tip over if the flood velocity does not exceed the value stated in Table 2.2.8. The HI-STAR 100 design basis accident external pressure far exceeds any pressure due to an actual flood.

Structural

Section 3.4 provides the analysis of the flood water applying an overturning moment. The results of the analysis show that the loaded overpack does not tip over if the flood velocity does not exceed the value stated in Table 2.2.8.

The structural evaluation of the overpack for the accident condition external pressure (Table 2.2.1) is presented in Section 3.4 and the resulting stresses from this event are shown to be well within the allowable values.

Thermal

There is no adverse effect on the thermal performance of the system as a result of this event. The thermal consequences of the flood is an increase in the rejection of the decay heat. Since the flood water temperature will be within the off-normal temperature range specified in Table 2.2.2, the thermal transient associated with the initial contact of the flood water with the overpack exterior surface will be bounded by the off-normal operation conditions. This is due to the higher heat transfer capabilities of water compared to air.

Shielding

There is no effect on the shielding performance of the system as a result of this event. The flood water acts as a radiation shield and will reduce the radiation doses.

Criticality

There is no effect on the criticality control features of the system as a result of this event. The criticality analysis is unaffected because under the flooding condition water does not enter the MPC cavity and therefore the reactivity would be less than the loading condition in the fuel pool which is presented in Section 6.1.

Confinement

There is no effect on the confinement function of the MPC as a result of this event.

Radiation Protection

Since there is no degradation in shielding or confinement capabilities as discussed above, there is no effect on occupational or public exposures as a result of this event.

Based on this evaluation, it is concluded that the flood accident does not affect the safe operation of the HI-STAR 100 System.

11.2.6.3 Flood Dose Calculations

Since the flood accident produces no leakage of radioactive material and no reduction in shielding effectiveness, there are no adverse radiological consequences.

11.2.6.4 Flood Accident Corrective Action

As shown in the analysis of the flood accident, the HI-STAR 100 System sustains no damage as a result of the flood. At the completion of the flood, the exterior of the overpack should be inspected, cleaned, and recoated, as necessary, to maintain the proper emissivity.

11.2.7 Earthquake

11.2.7.1 Cause of Earthquake

The HI-STAR 100 System may be employed at any reactor facility or ISFSI in the contiguous United States. It is possible that during the use of the HI-STAR 100 System, the ISFSI may experience an earthquake.

11.2.7.2 Earthquake Analysis

The earthquake accident analysis evaluates the effects of a seismic event on the loaded HI-STAR 100 System. The objective is to determine the stability limits of the HI-STAR 100 System. Based on a static stability criteria, it is shown in Chapter 3 that the HI-STAR 100 System is qualified to seismic activity less than or equal to the values specified in Table 2.2.8. The analyses in Chapter 3 show that the HI-STAR 100 System will not tip over under the conditions evaluated. The seismic activity has no adverse thermal, criticality, confinement, or shielding consequences.

Structural

The sole structural effect of the earthquake is an inertial loading of less than 1g. This loading is bounded by the handling accident and tip-over analyses presented in Sections 11.2.1 and 11.2.2, which analyzes a deceleration of 60g's and demonstrates that the MPC and overpack allowable stress criteria are met.

Thermal

There is no effect on the thermal performance of the system as a result of this event.

Shielding

There is no effect on the shielding performance of the system as a result of this event.

Criticality

There is no effect on the criticality control features of the system as a result of this event.

Confinement

There is no effect on the confinement function of the MPC as a result of this event.

Radiation Protection

Since there is no degradation in shielding or confinement capabilities as discussed above, there is no effect on occupational or public exposures as a result of this event.

Based on this evaluation, it is concluded that the earthquake does not affect the safe operation of the HI-STAR 100 System.

11.2.7.3 Earthquake Dose Calculations

Structural analysis of the earthquake accident shows that the loaded overpack will not tip over as a result of seismic activity. If the overpack were to tip over, the resultant damage would be equal to that experienced by the tip-over accident analyzed in Subsection 11.2.2. Since the loaded overpack does not tip-over, there is no increase in radiation dose rates or release of radioactivity.

11.2.7.4 Earthquake Accident Corrective Action

Following the earthquake accident, the ISFSI operator shall perform a visual and radiological inspection of the overpacks in storage to determine if any of the overpacks have tipped-over due to the earthquake exceeding the maximum ZPA specified in Chapter 2. In the unlikely event of a tip-over, corrective actions shall be in accordance with Subsection 11.2.1.4.

11.2.8 100% Fuel Rod Rupture

This accident event postulates that all the fuel rod rupture and that the appropriate quantities of fission product gases and fill gas are released from the fuel rods into the MPC cavity.

11.2.8.1 Cause of 100% Fuel Rod Rupture

Through all credible accident conditions, the HI-STAR 100 System maintains the spent nuclear fuel in an inert environment while maintaining the peak fuel cladding temperature below the required short-term temperature limits. There is no credible cause for 100% fuel rod rupture. This accident is postulated to evaluate the MPC confinement barrier for the maximum possible internal pressure.

11.2.8.2 100% Fuel Rod Rupture Analysis

The 100% fuel rod rupture accident has no structural, criticality or shielding consequences. The event does not change the reactivity of the stored fuel, the magnitude of the radiation source which is being shielded, or the shielding capability of the HI-STAR 100 System. The determination of the maximum accident pressure is provided in Chapter 4. The MPC design basis accident internal pressure bounds the pressure developed assuming 100% fuel rod rupture. The structural analysis provided in Chapter 3 evaluates the MPC confinement boundary under the accident condition internal pressure.

As a result of the non-mechanistic 100% fuel rod rupture, the fuel rod fill gas and fission gases are assumed to be released into the MPC cavity. This release causes a dilution of helium by the low thermal conductivity fission gases (Kr, Xe, and Tritium). This dilution of the helium gas and subsequent reduction in the thermal conductivity is bounded by the thermal analysis performed for the vacuum condition during loading operations performed in Chapter 4. Under the vacuum conditions, there is no gas providing a pathway for the thermal conduction of the spent nuclear fuel decay heat. Under the 100% fuel rod rupture condition, the mixture of gases and their resultant lower effective thermal conductivity would provide a thermal conduction pathway. However, no credit is taken for the thermal conductivity of the gas mixture.

From Figure 4.4.19 for the MPC-24 under vacuum conditions, the maximum peak cladding temperature is 691°K and the maximum MPC shell temperature is 384°K. The ΔT between the maximum peak cladding temperature and the maximum MPC shell temperature under vacuum conditions is 307°K or 553°F. The maximum normal condition MPC shell temperature is 332°F from Table 4.4.10. Therefore, a bounding peak fuel cladding temperature for the 100% fuel rod rupture may be calculated by adding the ΔT to the maximum normal condition MPC shell temperature. This results in 332°F + 553°F = 885°F. This bounding peak fuel cladding temperature is well below the allowable fuel cladding short term temperature limit of 1058°F.

The most significant thermal consequence of a postulated 100% fuel rod rupture accident is the increase in MPC confinement boundary pressure. As demonstrated in the fire accident transient

analysis, the confinement boundary pressure design limit is not exceeded (Table 11.2.3), which includes the 100% fuel and PWR BPRA rods rupture.

Structural

The structural evaluation of the MPC for the accident condition internal pressure presented in Section 3.4 demonstrates that the MPC stresses are well within the allowable values.

Thermal

The MPC internal pressure for the 100% fuel rod rupture condition is presented in Table 4.4.15. Table 11.2.2 provides the MPC internal pressure at fire condition temperatures with 100% fuel rod rupture. As can be seen from the values in both tables, the 125 psig design basis accident condition MPC internal pressure used in the structural evaluation bounds the calculated value.

Shielding

There is no effect on the shielding performance of the system as a result of this event.

Criticality

There is no effect on the criticality control features of the system as a result of this event.

Confinement

There is no effect on the confinement function of the MPC as a result of this event. As discussed in the structural evaluation above, all stresses remain within allowable values, assuring confinement boundary integrity.

Radiation Protection

Since there is no degradation in shielding or confinement capabilities as discussed above, there is no effect on occupational or public exposures as a result of this event.

Based on this evaluation, it is concluded that the non-mechanistic 100% fuel rod rupture accident does not affect the safe operation of the HI-STAR 100 System.

11.2.8.3 100% Fuel Rod Rupture Dose Calculations

The MPC confinement boundary maintains its integrity. There is no effect on the shielding effectiveness, and the magnitude of the radiation source is unchanged. Therefore, there is no release of radioactive material or an increase in radiation dose rates.

11.2.8.4 100% Fuel Rod Rupture Accident Corrective Action

As shown in the analysis of the 100% fuel rod rupture accident, the MPC confinement boundary is not compromised. The HI-STAR 100 System is designed to withstand this accident and continue performing the safe storage of spent nuclear fuel. No corrective actions are required.

11.2.9 Confinement Boundary Leakage

The confinement boundary leakage accident assumes complete failure of the overpack helium retention boundary, the rupture of 100% of the fuel rods and the release of the available radionuclides to the environment at a rate equal to the maximum leak test rate of the MPC confinement boundary plus the test sensitivity corrected for accident conditions.

11.2.9.1 Cause of Confinement Boundary Leakage Analysis

There is no credible cause for the confinement boundary leakage. The accidents analyzed in this chapter show that the MPC confinement boundary withstands all credible accidents. There are no man-made or natural phenomena which could cause simultaneous failure of the multiple boundaries restricting radioactive material release. The release is analyzed to demonstrate the safety of the HI-STAR 100 dry cask storage system.

11.2.9.2 Confinement Boundary Leakage

The following is the basis for the analysis of the confinement boundary leakage accident:

1. The fuel stored in the MPC has been cooled for 5 years and has a conservative burnup of 40,000 MWD/MTU. The PWR fuel type is the B&W 15x15 with 3.4% enrichment. The BWR fuel type is the GE 7x7 with 3.0% enrichment. These fuel characteristics bound the HI-STAR 100 design basis fuel.

2. One hundred percent of all the fuel rods are assumed to be ruptured.

3. The nuclides and fractions available for release are those listed in NUREG-6487 as specified in Chapter 7.

4. The leakage rate of the radionuclides to the environment is equal to the maximum leak test rate for the MPC confinement boundary plus the test sensitivity corrected for accident conditions.

5. Both the MPC confinement boundary and the overpack helium retention boundary fail simultaneously. The overpack helium retention boundary fails completely and no credit is taken for its ability to restrict the release of radionuclides.

Chapter 7 provides the analysis and assessment for the whole body and thyroid dose.

Structural

There are no structural consequences of the loss of confinement accident.

Thermal

Since this event is a non-mechanistic assumption, there is no realistic thermal consequences. As discussed in the technical specification, the leak test rate would result in a negligible loss of helium fill gas over the design life of the MPC and overpack, which would have an inconsequential effect on thermal performance.

Shielding

There is no effect on the shielding performance of the system as a result of this event.

Criticality

There is no effect on the criticality control features of the system as a result of this event.

Confinement

This event is based upon a non-mechanistic assumed breach of the confinement.

Radiation Protection

The postulated release will result in an increase in dose to the public. The analysis of this event is provided in Section 7.3. As shown therein, the postulated breach results in a dose to the public less than the limit established by 10CFR72.106(b) for persons located at the controlled area boundary.

11.2.9.3 Confinement Boundary Leakage Dose Calculations

10CFR72.106 requires that any individual located at or beyond the nearest controlled area boundary must not receive a dose greater than 5 Rem to the whole body or any organ from any design basis accident. The maximum whole body dose contribution as a result of the instantaneous leak accident is calculated in Chapter 7 to be less than 55 mRem. The thyroid dose as a result of the instantaneous leak accident is calculated in Chapter 7 to be less than 0.02 mRem. Both values are well below the regulatory limit of 5 Rem.

11.2.9.4 Confinement Boundary Leakage Accident Corrective Action

In the highly unlikely event that MPC confinement boundary and overpack helium retention boundary simultaneously fail and 100% of the fuel rods rupture, the analysis shows that the controlled area boundary accident dose limits are not exceeded. Following release of the radioactivity from the HI-STAR 100 System, the ISFSI operator may replace the overpack cavity inert atmosphere and seals, or unload the HI-STAR 100 System. If the HI-STAR 100 System is to be unloaded, the HI-STAR 100 System shall be placed in a pool or a dry unloading facility, and

unloaded in accordance with Chapter 8. If the overpack cavity is to be used as the confinement boundary perform the procedure below.

1. Leakage test the overpack inner closure plate seal in accordance with Chapter 8 and verify the leakage rates defined in the Technical Specifications are met. If the leakage rate is not met, remove the closure plate, replace the seal, and reperform the leakage test until the leakage rate is met.

2. Leakage test the vent port plug in accordance with Chapter 8 and verify the leakage rates defined in the Technical Specifications are met. If the leakage rate is not met, remove the vent port plug, replace the seal, and reperform the leakage test until the leakage rate is met.

3. Remove the drain port plug, evacuate the overpack cavity, and backfill the overpack cavity with helium to the pressure required for the MPC cavity.

4. Reinstall the drain port plug, leakage test the drain port plug in accordance with Chapter 8, and verify that the leakage rates defined in the Technical Specifications are met. After satisfactory leakage testing, the HI-STAR 100 System can be returned to service. The overpack is now defined as the confinement boundary.

11.2.10 Explosion

11.2.10.1 Cause of Explosion

An explosion within the bounds of an ISFSI is improbable since there are no explosive materials stored within the site boundary. An explosion as a result of combustion of the fuel contained in cask transport vehicle is possible. The fuel available for the explosion would be limited by site administrative controls and therefore, any explosion would be limited in size. Any explosion stipulated to occur beyond the site boundary would have a minimal effect on the HI-STAR 100 System.

11.2.10.2 Explosion Analysis

Any credible explosion accident is bounded by the design basis accident external pressure of 300 psig. The analysis performed in Chapter 3 shows that the HI-STAR 100 System is not adversely affected by the accident condition external pressure.

Structural

The structural evaluations for the overpack accident condition external pressure is presented in Section 3.4 and demonstrates that all stresses are within allowable values.

Thermal

There is no effect on the thermal performance of the system as a result of this event.

Shielding

There is no effect on the shielding performance of the system as a result of this event.

Criticality

There is no effect on the criticality control features of the system as a result of this event.

Confinement

There is no effect on the confinement function of the MPC as a result of this event.

Radiation Protection

Since there is no degradation in shielding or confinement capabilities as discussed above, there is no effect on occupational or public exposures as a result of this event.

Based on this evaluation, it is concluded that the explosion accident does not affect the safe operation of the HI-STAR 100 System.

11.2.10.3 Explosion Dose Calculations

The bounding external pressure load has no effect on the HI-STAR 100 overpack and therefore, no effect on the shielding, criticality, thermal or confinement capabilities of the HI-STAR 100 System.

11.2.10.4 Explosion Accident Corrective Action

The potential overpressure caused by the explosion is bounded by the design basis external pressure. The external pressure from the overpressure is shown not to damage the HI-STAR 100 System. Following an explosion, the ISFSI operator shall perform a visual and radiological inspection of the overpack. If the neutron shield is damaged as a result of explosion generated missiles, the neutron shield material may be replaced and the outer enclosure shell repaired. If damage to the neutron shield is extensive, the damage shall be repaired and retested in accordance with the shielding effectiveness test in Chapter 9.

11.2.11 Lightning

11.2.11.1 Cause of Lightning

The HI-STAR 100 System will be stored on an unsheltered ISFSI concrete pad. There is the potential for lightning to strike the overpack. This analysis evaluates the effects of lightning striking the overpack.

11.2.11.2 Lightning Analysis

The HI-STAR 100 System is a large metallic cask which can be stored in an unsheltered ISFSI. As such, it may be subject to lightning strikes. A lightning strike on the overpack may be visually detected by visible surface discoloration at the point of entry or exit of the current flow. The analysis of the consequence of a lightning strike assumes that the lightning strikes the upper surface of the top flange and proceeds through the inner shell and bottom plate to the ground. Although the total metal thickness of the HI-STAR overpack is in excess of 7 inches over most of its height, it is conservatively assumed that only the inner shell (2-1/2 inches thick) conducts the lightning energy. The electrical current flow results in current induced Joulean heating along that path. The object of the analysis is to compute the bulk heat-up of the inner shell by treating it as a laterally insulated resistor under the worst case lightning strike.

The integrated maximum current for a bounding lightning strike is a peak current of 250 kiloamps over a period of 260 microseconds, and a continuing current of up to 2 kiloamps for 2 seconds in the case of severe lightning discharges [11.2.4].

The amount of thermal energy, Q, developed by the combined currents from Joule's Law is given by:

$$Q = 9.478 \times 10^{-4} R [I_1^2 (dt_1) + I_2^2 (dt_2)]$$

$$Q = (22.98 \times 10^3) R \text{ Btu}$$

where,

Q = thermal energy (Btu)
I_1 = peak current (amps)
I_2 = continuing current (amps)
dt_1 = duration of peak current (seconds)
dt_2 = duration of continuing current (seconds)
R = resistance (ohms)

The effective resistance, R, of the overpack top flange, inner shell, and bottom plate are calculated from:

$$R = (\rho\, l)/a$$

where,

R = resistance (ohms)
ρ = resistivity = 11.09×10^{-8} (ohm-m) for steel transformers from Table 15.1.3, Mark's Standard Handbook for Mechanical Engineers, Ninth Edition [11.2.5]
l = length of conductor path (m)
a = area of conductor (m^2) = (current penetration)(radius)(2π)

The current penetration is conservatively assumed to be 0.01 inches or 2.54×10^{-4} m.

$$R_{top\ flange} = (11.09 \times 10^{-8})(0.4572)/(2\pi)(2.54 \times 10^{-4})(0.873)$$
$$= 3.64 \times 10^{-5} \text{ ohms}$$

$$R_{inner\ shell} = (11.09 \times 10^{-8})(4.42)/(2\pi)(2.54 \times 10^{-4})(0.873)$$
$$= 3.52 \times 10^{-4} \text{ ohms}$$

$$R_{bottom\ plate} = (11.09 \times 10^{-8})(0.305)/(2\pi)(2.54 \times 10^{-4})(0.873)$$
$$= 2.43 \times 10^{-5} \text{ ohms}$$

From the resistance calculated above, it is apparent that the maximum resistance occurs at the inner shell. Therefore, we conservatively assume that all the lightning energy is transferred to the overpack inner shell.

$$Q = (22.98 \times 10^{3})\ R \text{ Btu}$$

$$Q_{inner\ shell} = (22.98 \times 10^{3})(3.52 \times 10^{-4})$$

$$= 8.09 \text{ Btu}$$

It is conservatively assumed that this thermal energy dissipation occurs in a localized volume of the inner shell. Assuming no heat loss or thermal diffusion beyond the current flow boundary, the maximum temperature increase, ΔT, is calculated as:

$$\Delta T = Q_{inner\ shell}/mc$$

where,

ΔT = temperature change (°F)
$Q_{inner\ shell}$ = thermal energy (Btu)
c = 0.113 Btu/lb°F
m = mass (lbm)

$$\Delta T = (8.09)/(0.113)m$$
$$\Delta T = 71.59/m$$

$$m = l\rho a$$
$$m = (154)(0.283)[(2\pi)(0.01)(34)]$$
$$m = 93.1 \text{ lb}$$

$$\Delta T = 0.77°F$$

From the results above, it can be seen that the temperature rise in the inner shell will be very small (less than 1°F). This increase in inner shell temperature is too minuscule to have any effect on the performance of the HI-STAR 100 System.

Structural

There is no structural consequence as a result of this event.

Thermal

There is no effect on the thermal performance of the system as a result of this event.

Shielding

There is no effect on the shielding performance of the system as a result of this event.

Criticality

There is no effect on the criticality control features of the system as a result of this event.

Confinement

There is no effect on the confinement function of the MPC as a result of this event.

Radiation Protection

Since there is no degradation in shielding or confinement capabilities as discussed above, there is no effect on occupational or public exposures as a result of this event.

Based on this evaluation, it is concluded that the lightning accident does not affect the safe operation of the HI-STAR 100 System.

11.2.11.3 Lightning Dose Calculations

An evaluation of lightning strikes demonstrates that the effect of a lightning strike has no effect on the confinement boundary or shielding materials. Therefore, no further analysis is necessary.

11.2.11.4 Lightning Accident Corrective Action

The HI-STAR 100 System will not sustain any damage from the lightning accident. There is no surveillance or corrective action required.

11.2.12 Burial Under Debris

11.2.12.1 Cause of Burial Under Debris

Burial of the HI-STAR 100 System under debris is not a credible accident. During normal storage operations at the ISFSI, there are no structures over the casks. The minimum regulatory distance of 100 meters from the ISFSI to the nearest site boundary and the controlled area around the ISFSI concrete pad precludes the close proximity of substantial amounts of vegetation.

There is no credible mechanism for the HI-STAR 100 System to become completely buried under debris. However, for conservatism, complete burial under debris is considered.

11.2.12.2 Burial Under Debris Analysis

Burial of the HI-STAR 100 System does not impose a condition that would have more severe consequences for criticality, confinement, shielding, and structural analyses than that performed for the other accidents analyzed. The debris would provide additional shielding to reduce radiation doses. The accident external pressure bounds any credible pressure loading caused by the burial under debris.

Burial under debris can affect thermal performance because the debris acts as an insulator and heat sink. This will cause the HI-STAR 100 System and fuel cladding temperatures to increase. A thermal analysis has been performed to determine the time for the fuel cladding temperatures to reach the short term accident condition temperature limits during a burial under debris accident.

To demonstrate the inherent safety of the HI-STAR 100 System, a bounding analysis which considers the debris to act as a perfect insulator is considered. Under this scenario, the contents of the HI-STAR 100 System will undergo a transient heat up under adiabatic conditions. The minimum time required for the fuel cladding to reach the short term design fuel cladding temperature limit depends on the amount of thermal inertia of the cask, the cask initial conditions, and the spent nuclear fuel decay heat generation. All three of these parameters are conservatively bounded by the values in Table 11.2.4.

Using the values stated in Table 11.2.4, the bounding cask temperature rise of less than 5°F per hour is determined. This provides in excess of 60 hours of time before the cladding temperatures exceed the short term fuel cladding temperature limit.

The MPC-68 has the highest steady-state fuel cladding temperature. If 300°F is postulated as the permissible temperature rise the resultant pressure in the MPC cavity can be calculated as a result of the burial under debris accident.

Chapter 4 calculates the MPC internal pressure with an ambient temperature of 80°F, 100% fuel rods ruptured, full insolation, and maximum decay heat, and reports the maximum value of 84.6 psig in Table 4.4.15 at an average MPC cavity temperature of 499.2°K. Using this pressure, an assumed increase in the average temperature of 300°F (499.2°K to 665.9°K), and the ideal gas law, the resultant MPC internal pressure is calculated below.

$$\frac{P_1}{P_2} = \frac{T_1}{T_2}$$

$$P_2 = \frac{P_1 T_2}{T_1}$$

$$P_2 = \frac{(84.6 psig + 14.7)(665.9°K)}{499.2°K}$$

$$P_2 = 132.5\ psia\ or\ 117.8\ psig$$

The accident MPC internal design pressure of 125 psig (Table 2.2.1) bounds the resultant pressure calculated above. Therefore, no additional analysis is required.

Structural

The structural evaluation of the MPC enclosure vessel for normal internal pressure conditions bounds the pressure calculated above. Therefore, the resulting stresses from the normal condition internal pressure bound the stresses as a result of this event and are well within the allowable values, as discussed in Section 3.4.

Thermal

The MPC internal pressure for the burial under debris accident is calculated above. As can be seen, the 100 psig design basis internal pressure for normal conditions used in the structural evaluation bounds the calculated value for this accident.

Shielding

There is no effect on the shielding performance of the system as a result of this event.

Criticality

There is no effect on the criticality control features of the system as a result of this event.

Confinement

There is no effect on the confinement function of the MPC as a result of this event. As discussed in the structural evaluation above, all stresses remain within allowable values, assuring confinement boundary integrity.

Radiation Protection

Since there is no degradation in shielding or confinement capabilities as discussed above, there is no effect on occupational or public exposures as a result of this event.

Based on this evaluation, it is concluded that the burial under debris accident does not affect the safe operation of the HI-STAR 100 System, if the debris is removed within 60 hours of overpack burial.

11.2.12.3 Burial Under Debris Dose Calculations

As discussed in the burial under debris analysis, the shielding is enhanced while the HI-STAR 100 System is covered. As the overpack reaches elevated temperatures, the neutron shielding material will exceed its design basis temperature. This will cause some degradation of the neutron shield effectiveness. However, the loss of neutron shield effectiveness is bounded by the assumption of complete loss of the neutron shield in the shielding analysis of the post-accident HI-STAR 100 System in Chapter 5.

The elevated temperatures will not cause the breach of the confinement system and the short term fuel cladding temperature is not exceeded. Therefore, the only radiological impact is the decreased effectiveness of the overpack neutron shield, which is bounded by the analysis in Chapter 5.

11.2.12.4 Burial Under Debris Accident Corrective Action

Analysis of the burial under debris accident shows that the fuel cladding peak temperatures will not exceed the short term limit if the debris is removed within 60 hours. Upon detection of the burial under debris accident, the ISFSI operator shall assign personnel to remove the debris with mechanical and manual means as necessary. After uncovering the overpack, the cask shall be visually and radiologically inspected for any damage.

11.2.13 Extreme Environmental Temperature

11.2.13.1 Cause of Extreme Environmental Temperature

The extreme environmental temperature is postulated as a constant ambient temperature caused by extreme weather conditions. To determine the effects of the extreme temperature, it is conservatively assumed that the temperature persists for a sufficient duration to allow the HI-STAR 100 System to achieve thermal equilibrium. Because of the large mass of the HI-STAR 100 System, with its corresponding large thermal inertia and the limited duration for the extreme temperature, this assumption is conservative.

11.2.13.2 Extreme Environmental Temperature Analysis

The accident condition considering an environmental temperature of 125°F for a duration sufficient to reach thermal equilibrium is evaluated with respect to accident condition design temperatures listed in Table 2.2.3. The evaluation is performed with design basis fuel with the maximum decay heat and the most restrictive thermal resistance. The 125°F extreme environmental temperature is applied with full solar insolation.

The HI-STAR 100 System maximum temperatures for components close to the design basis temperatures are listed in Tables 4.4.10 and 4.4.11. These temperatures are conservatively calculated at the normal environmental temperature of 80°F. The extreme environmental temperature is 125°F, which is an increase of 45°F. The extreme environmental condition temperatures are calculated by adding 45°F to the maximum normal temperatures of the highest component temperature from the MPC-68 or MPC-24. Table 11.2.6 lists the component temperatures at the extreme environmental temperatures. As illustrated by the table, all the temperatures except the neutron shield are well below the accident condition design basis temperatures. The extreme environmental temperature is of a short duration (several consecutive days would be highly unlikely) and the resultant temperatures are evaluated against short-term accident condition temperature limits. Therefore, the HI-STAR 100 System will continue to operate safely under the extreme environmental temperatures.

Additionally, the extreme environmental temperature generates internal pressures which are bounded by the pressure calculated for the fire accident condition because the fire accident condition temperatures are much higher than the temperatures as a result of the extreme environmental temperature. As shown in Table 11.2.3 for the fire condition event pressures, the accident condition pressures are below the limit specified in Table 2.2.1.

Structural

The structural evaluation of the MPC enclosure vessel for accident condition internal pressure bounds the pressure resulting from this event. Therefore, the resulting stresses from this event are bounded by that of the accident condition and are well within the allowable values, as discussed in Section 3.4.

Thermal

The resulting temperatures for the system and fuel assembly cladding are provided in Table 11.2.6. As can be seen from this table, all temperatures except the neutron shield are within the short-term accident condition allowable values specified in Table 2.2.3. The neutron shield temperature does exceed the long-term normal condition temperature specified in Table 2.2.3 by 19°F.

Shielding

The peak neutron shield temperature is higher than the stipulated the long-term normal condition temperature specified in Table 2.2.3 by 19°F. This extreme ambient temperature will persist for a short duration (3-day average) and therefore the degradation in the neutron shield will be negligible.

Criticality

There is no effect on the criticality control features of the system as a result of this event.

Confinement

There is no effect on the confinement function of the MPC as a result of this event. As discussed in the structural evaluation above, all stresses remain within allowable values, assuring confinement boundary integrity.

Radiation Protection

Since there is negligible degradation in shielding and no degradation in confinement capabilities as discussed above, there is a negligible effect on occupational or public exposures as a result of this event.

Based on this evaluation, it is concluded that the extreme environmental temperature accident does not affect the safe operation of the HI-STAR 100 System.

11.2.13.3 Extreme Environmental Temperature Dose Calculations

The extreme environmental temperature may cause very localized regions of the neutron shielding material to exceed its normal design temperature for short time durations. The bulk of the neutron shield material away from these local hot spots will remain within the stipulated normal condition temperature limits. Consequently, degradation of the neutron shield effectiveness is negligible. However, the loss of neutron shield effectiveness is bounded by the assumption of complete loss of the neutron shield in the shielding analysis of the post-accident HI-STAR 100 System in Chapter 5.

The elevated temperatures will not cause a breach of the confinement system and the short-term fuel cladding temperature is not exceeded. Therefore, the only radiological impact is the decreased effectiveness of the overpack neutron shield, which is bounded by the analysis in Chapter 5.

11.2.13.4 Extreme Environmental Temperature Corrective Action

Analysis of the extreme environmental temperature accident demonstrates that the only possible consequence is a slight loss in neutron shield effectiveness. Upon detection of an extreme environmental temperature accident, the cask shall be radiologically inspected for any damage.

Table 11.2.1

SUMMARY OF TEMPERATURE-DEPENDENT FORCED CONVECTION HEAT TRANSFER CORRELATION PARAMETERS FOR AIR

Parameter	**Trend with Increasing Temperatures**	**Criteria to Maximize h_{fc}**	**Conservative Parameter Value**	**Evaluated At**
Temperature Range	100°F-1475°F	NA	NA	NA
Density	Decreases	Reynolds Number	High	100°F
Viscosity	Increases	Reynolds Number	Low	100°F
Conductivity (K_f)	Increases	h_{fc} Proportional to K_f	High	1475°F

Table 11.2.2

MAXIMUM HI-STAR 100 SYSTEM TEMPERATURE UNDER A FIRE ACCIDENT CONDITION

Component	Initial Condition [°F]	During Fire [°F]	Post-Fire Cooldown [°F]	Short-Term Temperature Limit [°F]
Fuel Cladding	741	741	771	1058
Basket Periphery	393	393	422	950
MPC Shell	331	331	364	775
Overpack Inner Shell	292	292	328	500
Overpack Closure Plate†	155	484	484	700
Overpack Top Flange	164	524	524	700
Overpack Baseplate Periphery†	197	496	496	700
Neutron Shield Inner Surface	273	273	314	††
Neutron Shield Outer Surface	233	514	551	††
Overpack Enclosure Shell	228	854	854	1000

† Overpack closure plate, overpack port plug, and overpack port cover seals short-term temperature limits are 1200°F. The maximum fire condition seals temperature is bounded by the reported closure plate and baseplate maximum temperatures. Consequently, a large margin of safety exists to permit safe operation of seals in the overpack helium retention boundary.

†† Neutron shield integrity during fire is discussed in the text.

Table 11.2.3

MAXIMUM HI-STAR 100 SYSTEM FIRE ACCIDENT CONDITION MPC CAVITY PRESSURES†

Condition	**Pressure (psig)**	
	MPC-24††	**MPC-68**
Without fuel rod rupture	57.9	75.1
With 100% fuel rod rupture	124.2	108.8
Accident Design Pressure	125	125

† Pressure analysis is based on NUREG-1536 criteria (i.e., 100% rods fill gas and 30% of radioactive gases are available for release from a ruptured rod) and a conservatively bounding 216°F (120°C) MPC cavity temperature rise.

†† PWR fuel includes hypothetical BPRA rods rupture in the pressure calculations.

Table 11.2.4

SUMMARY OF INPUTS FOR ADIABATIC CASK HEAT-UP

Minimum Weight of HI-STAR 100 System (lb.)	200,000
Lower Heat Capacity of Carbon Steel (BTU/lb/°F)	0.1
Initial Uniform Temperature of Cask (°F)	749†
Bounding Maximum Decay Heat (kW)	20

† The cask is initially conservatively assumed to be at a uniform temperature equal to temperature limit of the fuel cladding for long-term storage (see Table 4.3.1).

Table 11.2.5

SUMMARY OF HI-STAR 100 SYSTEM MAXIMUM
POST-FIRE COOLDOWN (33 HOURS AFTER FIRE) TEMPERATURES

Location	Temperature [°F]
Hottest MPC Basket Cross Section:	
Basket center	755
Basket periphery	419
MPC shell	358
Overpack inner shell	317
Overpack enclosure shell	249
MPC Basket Bottom:	
Basket center	285
Basket periphery	238
MPC shell	231
Overpack inner shell	225
Overpack enclosure shell	188
MPC Basket Top:	
Basket center	229
Basket periphery	199
MPC shell	193
Overpack inner shell	187
Overpack outer shell	166

Table 11.2.6

MAXIMUM TEMPERATURES CAUSED BY EXTREME ENVIRONMENTAL TEMPERATURES [°F]

Temperature Location	**Normal**	**Calculated Extreme Environment**	**Accident Condition Design Temperature**
Fuel cladding	741† (5-yr cooling)	786 (5-yr cooling)	1058 short-term
MPC basket	725†	770	950 short-term
MPC outer shell surface	332††	377	775 short-term
MPC/overpack helium gap outer surface	292††	337	400 long-term
Neutron shield inner surface	274††	319	300 long-term
Overpack shell outside surface	229††	274	350 long-term

† MPC-68 normal storage maximum temperatures from Table 4.4.11.

†† MPC-24 normal storage maximum temperatures from Table 4.4.10.

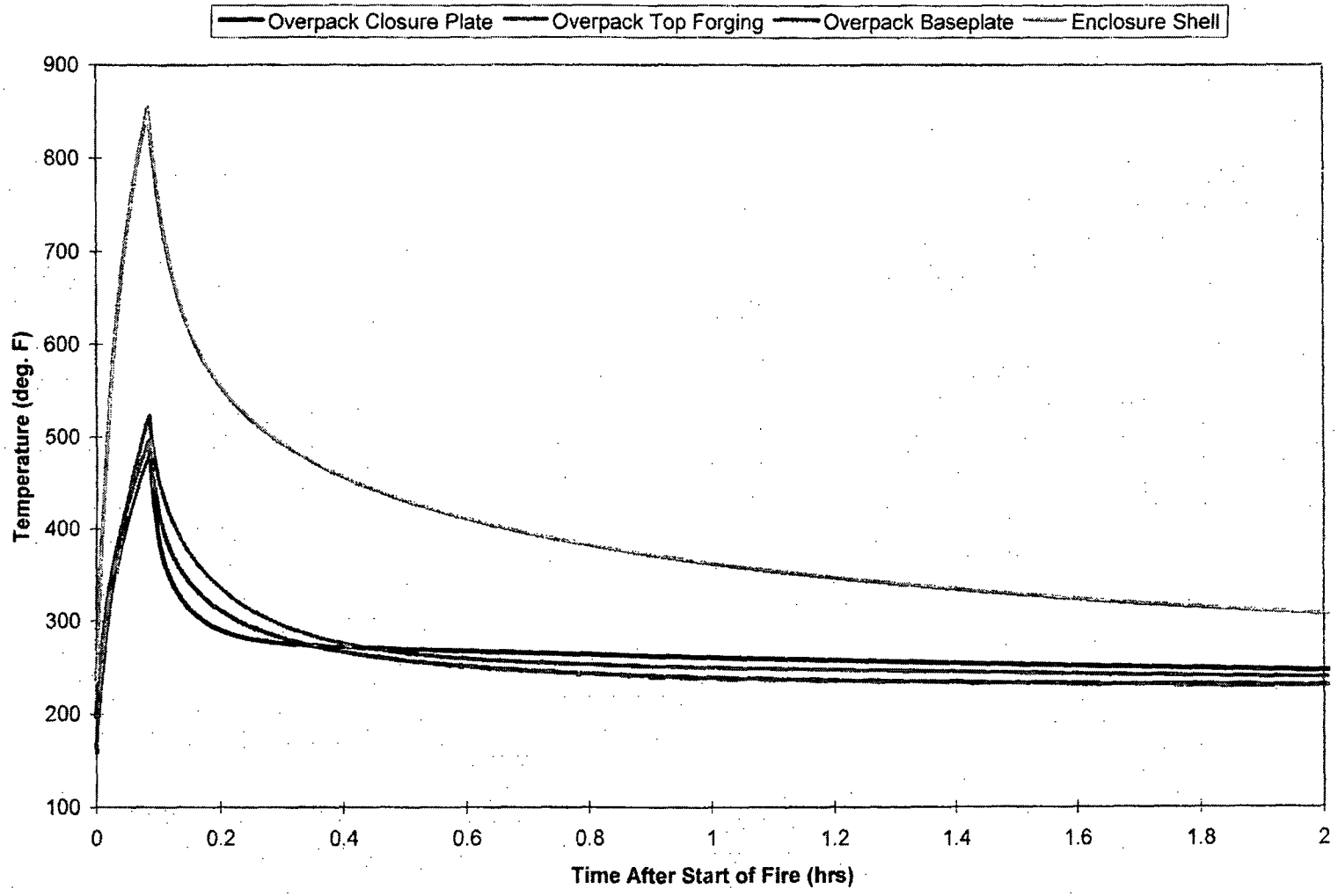

FIGURE 11.2.1; HI-STAR 100 SYSTEM EXPOSED SURFACES HYPOTHETICAL FIRE ACCIDENT TRANSIENT TEMPERATURE RESPONSE

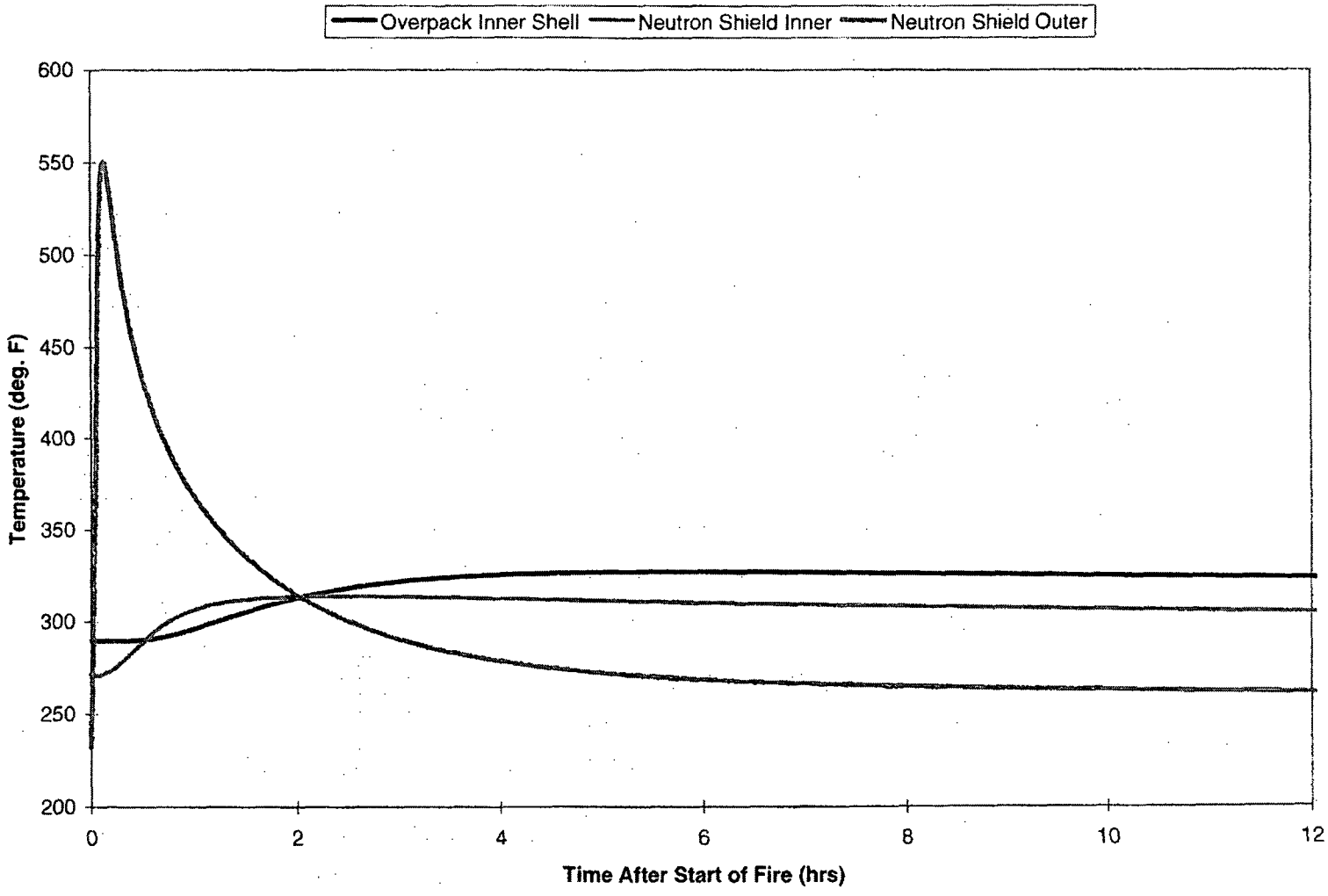

FIGURE 11.2.2; HI-STAR 100 SYSTEM NON-EXPOSED OVERPACK COMPONENTS HYPOTHETICAL FIRE ACCIDENT TRANSIENT TEMPERATURE RESPONSE

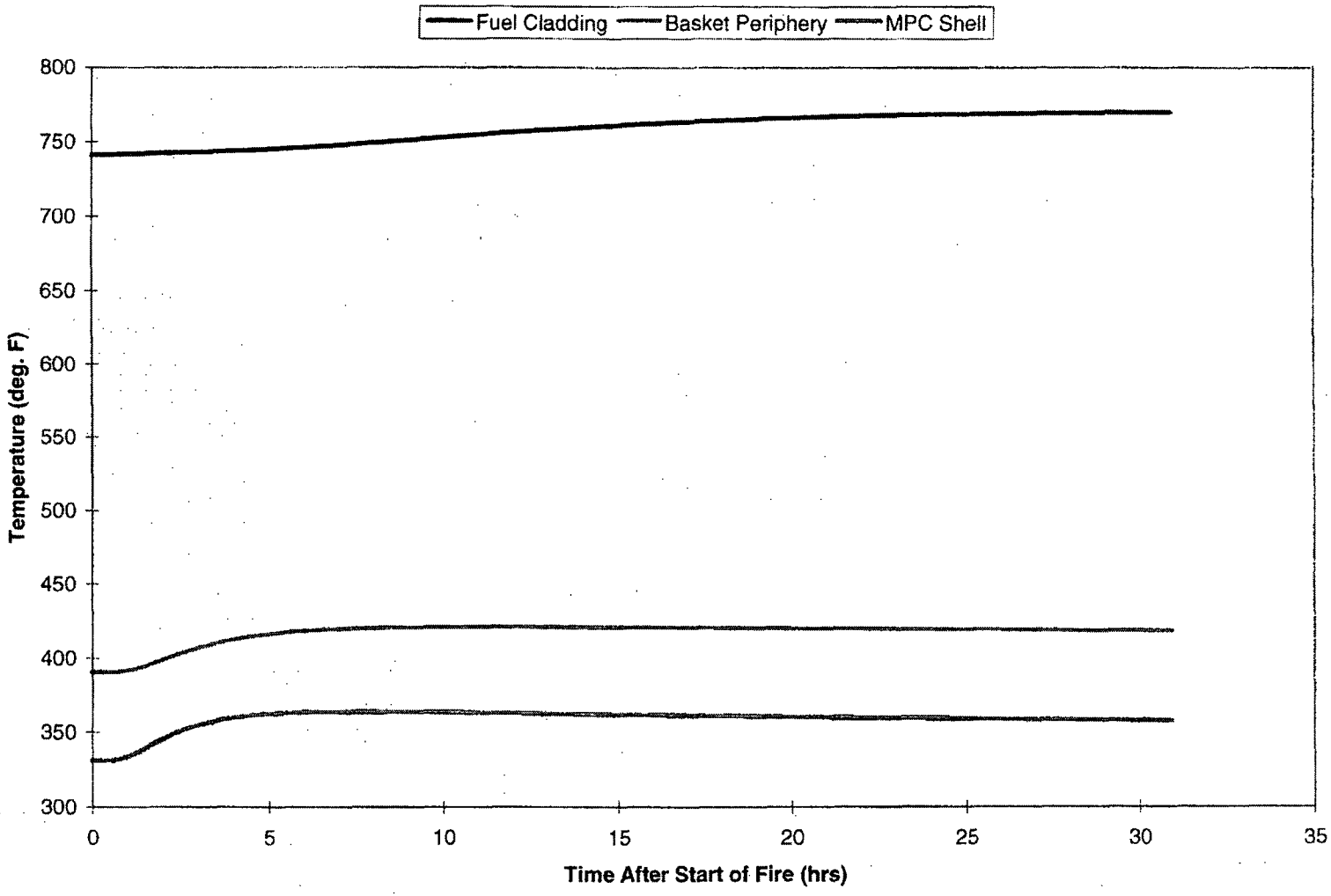

FIGURE 11.2.3; HI-STAR 100 SYSTEM MPC COMPONENTS AND FUEL CLADDING HYPOTHETICAL FIRE ACCIDENT TRANSIENT TEMPERATURE RESPONSE

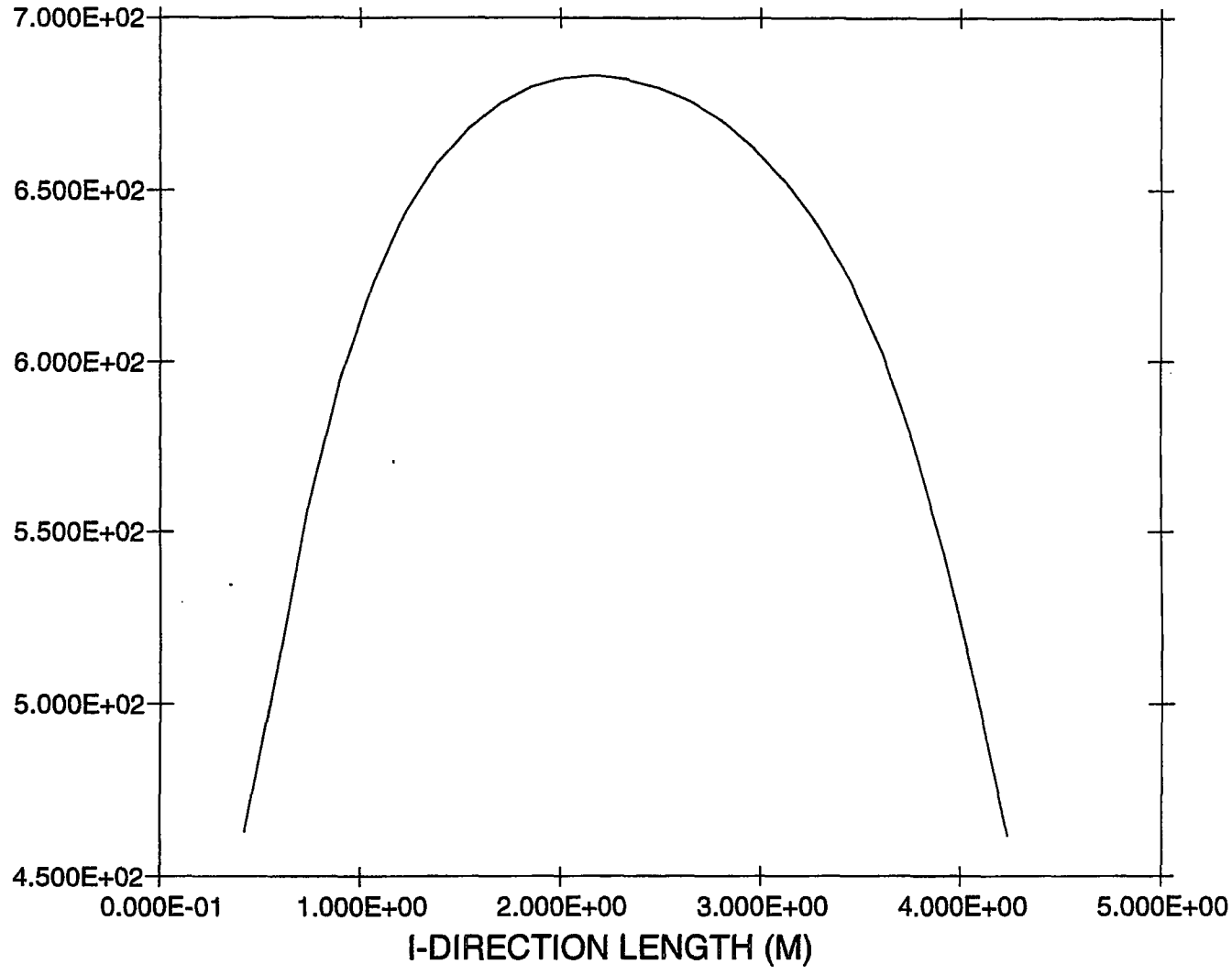

Y Z X	FIGURE 11.2.4: HOTTEST ROD AXIAL TEMPERATURE PROFILE (Post Fire Cooldown at 33 Hours) Temperature (Kelvin) Vs. Axial Distance (Meters)	May 16 1998 Fluent 4.32 Fluent Inc.

11.3 Regulatory Compliance

Chapter 11 has been written to provide an identification and analysis of hazards, as well as a summary of the HI-STAR 100 System's response to both off-normal and accident or design-basis events. When evaluating each event, the cause of the event, detection of the event, summary of event consequences and regulatory compliance, and corrective course of action are provided. The information provided in Chapter 11 can be summarized as follows:

- Structures, systems, and components of the HI-STAR 100 System are adequate to prevent accidents and to mitigate the consequences of accidents and natural phenomena events that do occur.
- The spacing of the HI-STAR 100 overpacks, discussed in Section 1.4 of the FSAR, will ensure accessibility of the equipment and services required for emergency response to the events evaluated in Chapter 11.
- The Technical Specifications for the HI-STAR 100 System are provided as Appendix A to Certificate of Compliance 72-1008.
- The HI-STAR 100 System has been evaluated to demonstrate that it will maintain confinement of radioactive material under credible accident conditions.
- An accident or natural phenomena event will not preclude the ready retrieval of spent fuel for further processing or disposal.
- The spent fuel will be maintained in a subcritical condition under accident conditions.
- Neither off-normal nor accident conditions will result in a dose, to an individual outside the controlled area, that exceeds the limits of 10 CFR 72.104(a) or 72.106(b), respectively.
- No instruments or control systems are required to remain operational under accident conditions.

The accident design criteria for the HI-STAR 100 System is in compliance with 10 CFR Part 72 and the accident design and acceptance criteria have been satisfied. The accident evaluation of the HI-STAR 100 System demonstrates that it will provide for safe storage of spent fuel during credible accident situations. This is based on the analyses summarized in Chapter 11, 10 CFR Part 72, appropriate regulatory guides, applicable codes and standards, and accepted engineering practice.

11.4 REFERENCES

[11.2.1] Chun, et al., "Dynamic Impact Effects on Spent Fuel Assemblies," Lawrence Livermore National Laboratory, UCID-21246, October 1987.

[11.2.2] ESEERCO Project EP91-29 and EPRI Project 3100-02, "Debris Collection System for Boiling Water Reactor Consolidation Equipment," B&W Fuel Company, October 1995.

[11.2.3] Jacob, M., "Heat Transfer," John Wiley & Sons, Inc. page 555, (1967).

[11.2.4] Cianos, N., and Pierce, E.T., "A Ground Lightning Environment for Engineering Usage," Technical Report No. 1, SRI Project No. 1834, Standard Research Institute, Menlo Park, CA, August 1997.

[11.2.5] Avallone, E.A., and Baumeister, T., Mark's Standard Handbook for Mechanical Engineering, Ninth Edition, McGraw Hill Inc., 1987.

[11.2.6] IAEA Safety Standards, "Regulations for the Safe Transport of Radioactive Material," International Atomic Energy Agency, Vienna, 1985.

[11.2.7] "Thermal Measurements in a Series of Large Pool Fires", Sandia Report SAND85-0196.TTC-0659.UC71, August 1987.

CHAPTER 12: OPERATING CONTROLS AND LIMITS

12.1 PROPOSED OPERATING CONTROLS AND LIMITS

The HI-STAR 100 System provides passive dry storage of spent fuel assemblies in interchangeable MPCs with redundant multi-pass welded closure. The loaded MPC is enclosed in a dual-purpose metal overpack. This chapter defines the operating controls and limits (i.e., Technical Specifications) including their supporting bases for deployment and storage of a HI-STAR 100 System at an ISFSI. The information provided in this chapter is in full compliance with NUREG-1536 [12.1.1].

12.1.1 NUREG-1536 (Standard Review Plan) Acceptance Criteria

12.1.1.1 This portion of the FSAR establishes the commitments regarding the HI-STAR 100 System and its use. Other 10CFR72 [12.1.2] and 10CFR20 [12.1.3] requirements in addition to the Technical Specifications may apply. The conditions for a general license holder found in 10CFR72.212 [12.1.2] shall be met by the licensee prior to spent fuel loading into the HI-STAR 100 System. The general license conditions governed by 10CFR72 [12.1.2] are not repeated with these Technical Specifications. Licensees are required to comply with all commitments and requirements.

12.1.1.2 The Technical Specifications provided herein are primarily established to maintain subcriticality, confinement boundary integrity, shielding and radiological protection, heat removal capability, and structural integrity under normal, off-normal and accident conditions. Table 12.1.1 addresses each of these conditions respectively and identifies the appropriate Technical Specification(s) designed to control the condition. Table 12.1.2 provides the list of Technical Specifications for the HI-STAR 100 System.

Table 12.1.1

HI-STAR 100 SYSTEM CONTROLS

Condition to be Controlled	Applicable Technical Specifications
Criticality Control	Refer to Appendix B to Certificate of Compliance 72-1008 for fuel specifications and design features.
Confinement Boundary Integrity	2.1.1 Multi-Purpose Canister (MPC)
Shielding and Radiological Protection	Refer to Appendix B to Certificate of Compliance 72-1008 for fuel specifications and design features. 2.1.1 Multi-Purpose Canister (MPC) 2.1.4 Fuel Cool-Down 2.2.1 OVERPACK Average Surface Dose Rates 2.2.2 SFSC Surface Contamination
Heat Removal Capability	Refer to Appendix B to Certificate of Compliance 72-1008 for fuel specifications and design features. 2.1.1 Multi-Purpose Canister (MPC) 2.1.2 OVERPACK
Structural Integrity	2.1.2 OVERPACK 2.1.3 SFSC Lifting Requirements

Table 12.1.2

HI-STAR 100 TECHNICAL SPECIFICATIONS†

NUMBER	TECHNICAL SPECIFICATION
1.0	USE AND APPLICATION 1.1 Definitions 1.2 Logical Connectors 1.3 Completion Times 1.4 Frequency
2.0	LIMITING CONDITION FOR OPERATION (LCO) APPLICABILITY SURVEILLANCE REQUIREMENT (SR) APPLICABILITY
2.1.1	Multi-Purpose Canister (MPC)
2.1.2	OVERPACK
2.1.3	SFSC Lifting Requirements
2.1.4	Fuel Cool-Down
2.2.1	OVERPACK Average Surface Dose Rates
2.2.2	SFSC Surface Contamination
Table 2-1	MPC Model-Dependent Limits
3.0	ADMINISTRATIVE CONTROLS

† Refer to Certificate of Compliance 72-1008, Appendix A for Technical Specifications and Appendix B for fuel specifications and design features.

12.2 DEVELOPMENT OF OPERATING CONTROLS AND LIMITS

This section provides a discussion of the operating controls and limits for the HI-STAR 100 System to assure long-term performance consistent with the conditions analyzed in this FSAR. In addition to the controls and limits provided in the Technical Specifications contained in Appendix A to Certificate of Compliance (CoC) 72-1008 and the design features specified in Appendix B to CoC 72-1008, the licensee shall ensure that the following training and dry run activities are performed.

12.2.1 Training Modules

Training modules are to be developed under the licensee's training program to require a comprehensive, site-specific training, assessment, and qualification (including periodic re-qualification) program for the operation and maintenance of the HI-STAR 100 Spent Fuel Storage Cask (SFSC) System and the Independent Spent Fuel Storage Installation (ISFSI). The training modules shall include the following elements, at a minimum:

1. HI-STAR 100 System Design (overview);
2. ISFSI Facility Design (overview);
3. Systems, Structures, and Components Important to Safety (overview)
4. HI-STAR 100 System Final Safety Analysis Report (overview);
5. NRC Safety Evaluation Report (overview);
6. Certificate of Compliance conditions;
7. HI-STAR 100 Technical Specifications and other Conditions for Use;
8. HI-STAR 100 Regulatory Requirements (e.g., 10CFR72.48, 10CFR72, Subpart K, 10CFR20, 10CFR73);
9. Required instrumentation and use;
10. Inspection personnel qualifications
11. Operating Experience Reviews
12. HI-STAR 100 System and ISFSI Procedures, including
    - Procedural overview
    - Fuel qualification and loading

- MPC /overpack rigging and handling, including safe load pathways
- MPC welding operations
- Overpack closure
- Auxiliary equipment operation and maintenance (e.g., draining, vacuum drying, helium backfilling, and cooldown)
- MPC/overpack pre-operational and in-service inspections and tests
- Transfer and securing of the loaded overpack onto the transport vehicle
- Transfer and offloading of the overpack at the ISFSI
- Preparation of MPC/overpack for fuel unloading
- Unloading fuel from the MPC/overpack
- Surveillance
- Radiation protection
- Maintenance
- Security
- Off-normal and accident conditions, responses, and corrective actions

12.2.2 Dry Run Training

A dry run training exercise of the loading, closure, handling, and transfer of the HI-STAR 100 System shall be conducted by the licensee prior to the first use the system to load spent fuel assemblies. The dry run shall include, but is not limited to the following:

1. Receipt inspection of HI-STAR 100 System components.

2. Moving the HI-STAR 100 MPC/overpack into the spent fuel pool.

3. Preparation of the HI-STAR 100 System for fuel loading.

4. Selection and verification of specific fuel assemblies to ensure type conformance.

5. Locating specific assemblies and placing assemblies into the MPC (using a dummy fuel assembly), including appropriate independent verification.

6. Remote installation of the MPC lid and removal of HI-STAR 100 overpack/MPC from the spent fuel pool.

7. MPC welding, NDE inspections, hydrostatic testing, draining, vacuum drying, helium backfilling and leakage testing.

8. HI-STAR 100 overpack closure, draining, vacuum drying, helium backfilling and leakage testing.

9. HI-STAR 100 overpack upending/downending on the horizontal transfer trailer or other transfer device, as applicable to the site's cask handling arrangement.

10. Placement of the HI-STAR 100 System at the ISFSI.

12.2.3 Functional and Operating Limits, Monitoring Instruments, and Limiting Control Settings

The controls and limits apply to operating parameters and conditions which are observable, detectable, and/or measurable. The HI-STAR 100 System is completely passive during storage and requires no monitoring instruments.

12.2.4 Limiting Conditions for Operation

Limiting conditions for operation specify the minimum capability or level of performance that is required to assure that the HI-STAR 100 System can fulfill its safety functions.

12.2.4.1 Equipment

The HI-STAR 100 System and its components have been analyzed for specified normal, off-normal, and accident conditions, including extreme environmental conditions. Analysis has shown in this FSAR that no credible condition or event prevents the HI-STAR 100 System from meeting its safety function. As a result, there is no threat to public health and safety from any postulated accident condition or analyzed event. When all equipment is loaded, tested, and placed into storage in accordance with procedures developed for the ISFSI, no failure of the system to perform its safety function is expected to occur.

12.2.5 Surveillance Requirements

The analyses provided in this FSAR show that the HI-STAR 100 System fulfills its safety functions, provided that the Technical Specifications in Appendix 12.A are met. Surveillance requirements during loading, unloading, and on-site transfer operations are provided in the Technical Specifications.

12.2.6 Design Features

This section describes HI-STAR 100 System design features that are Important to Safety. These features require design controls and fabrication controls. The design features, detailed herein, are established in specifications and drawings which are controlled through the quality assurance program presented in Chapter 13. Fabrication controls and inspections to assure that the HI-STAR 100 System is fabricated in accordance with the design drawings and the requirements of this FSAR are described in Chapter 9.

12.2.6.1 MPC

a. Basket material composition, properties, dimensions, and tolerances for criticality control.

b. Canister material mechanical properties for structural integrity of the confinement boundary.

c. Canister and basket material thermal properties and dimensions for heat transfer control.

d. Canister and basket material composition and dimensions for dose rate control.

12.2.6.2 HI-STAR 100 Overpack

a. HI-STAR 100 overpack material mechanical properties and dimensions for structural integrity to provide protection of the MPC and shielding of the spent nuclear fuel assemblies during loading, unloading and handling operations.

b. HI-STAR 100 overpack material thermal properties and dimensions for heat transfer control.

c. HI-STAR 100 overpack material composition and dimensions for dose rate control.

12.3 TECHNICAL SPECIFICATIONS

Technical Specifications for the HI-STAR 100 System are provided in Appendix A to CoC 72-1008. Fuel specifications and design features are provided in Appendix B to CoC 72-1008. Bases for the Technical Specifications in CoC Appendix A are provided in FSAR Appendix 12.A. The format and content of the HI-STAR 100 System Technical Specifications and Bases are that of the Improved Standard Technical Specifications for power reactors, to the extent they apply to a dry spent fuel storage cask system. NUMARC Document 93-03, "Writer's Guide for the Restructured Technical Specifications" [12.3.9] was used as a guide in the development of the Technical Specifications and Bases.

12.4 REGULATORY EVALUATION:

Table 12.1.2 lists the Technical Specifications for HI-STAR 100 System. The Technical Specifications are detailed in Appendix A to CoC 72-1008. Fuel specifications and design features are contained in Appendix B to CoC 72-1008.

The conditions for use of HI-STAR 100 System identify necessary Technical Specifications to satisfy 10 CFR Part 72, and the applicable acceptance criteria have been satisfied. The proposed Technical Specifications, fuel specifications, and design features provide reasonable assurance that the HI-STAR 100 will allow safe storage of spent fuel and is in compliance with 10 CFR Part 72, the regulatory guides applicable codes and standards, and accepted practices.

12.5 REFERENCES

[12.1.1] U.S. Nuclear Regulatory Commission, "Standard Review Plan for Dry Cask Storage Systems", NUREG-1536, Final Report, January 1997.

[12.1.2] *U.S. Code of Federal Regulations,* Title 10, "Energy", Part 72, "Licensing Requirements for Independent Storage of Spent Nuclear Fuel and High-Level Radioactive Waste."

[12.1.3] *U.S. Code of Federal Regulations,* Title 10, "Energy", Part 20, "Standards for Protection Against Radiation."

[12.3.1] R.W., Knoll, *et al.*, Pacific Northwest Laboratory, "Evaluation of Cover Gas Impurities and Their Effects on the Dry Cask Storage of LWR Spent Fuel,"PNL-6365, DE88 003988, November 1987.

[12.3.2] American Society of Mechanical Engineers "Boiler and Pressure Vessel Code"

[12.3.3] American National Standards Institute, Institute for Nuclear Materials Management, "American National Standard for Radioactive Materials – Leakage Tests on Packages for Shipment," ANSI N14.5-1997.

[12.3.4] *U.S. Code of Federal Regulations,* Title 10, "Energy", Part 71, "Packaging and Transport of Radioactive Materials."

[12.3.5] NUREG-0554, Single Failure Proof Cranes for Nuclear power Plants.

[12.3.6] American National Standards Institute, Institute for Nuclear Materials Management, "American National Standard for Special Lifting Devices for Shipping Containers Weighing 10 000 Pounds (4500 KG) or More for Nuclear Materials", ANSI N14.6, 1993.

[12.3.7] Witte, M., et al., "Evaluation of Low-Velocity Impacts Tests of Solid Steel Billet onto Concrete Pads, and Application to Generic ISFSI Storage Cask for Tipover and Side Drop." Lawrence Livermore National Laboratory, UCRL-ID-126295, Livermore, California, March 1997.

[12.3.8] American Society of Nondestructive Testing – American Society for Metals, "Nondestructive Testing Handbook, Volume One, Leakage Testing", SAN 204-7586, pp 448, June 1982.

[12.3.9] Nuclear Management and Resources Council, Inc. – "Writer's Guide for the Restructured Technical Specifications" NUMARC 93-03, February 1993.

APPENDIX 12.A

TECHNICAL SPECIFICATION BASES

FOR THE HOLTEC HI-STAR 100 SPENT FUEL STORAGE CASK SYSTEM

(37 Pages Including this Page)

BASES TABLE OF CONTENTS

B 2.0 LIMITING CONDITION FOR OPERATION (LCO) APPLICABILITY

BASES

LCOs

LCO 2.0.1, 2.0.2, 2.0.4, and 2.0.5 establish the general requirements applicable to all Specifications and apply at all times, unless otherwise stated.

LCO 2.0.1

LCO 2.0.1 establishes the Applicability statement within each individual Specification as the requirement for when the LCO is required to be met (i.e., when the facility is in the specified conditions of the Applicability statement of each Specification).

LCO 2.0.2

LCO 2.0.2 establishes that upon discovery of a failure to meet an LCO, the associated ACTIONS shall be met. The Completion Time of each Required Action for an ACTIONS Condition is applicable from the point in time that an ACTIONS Condition is entered. The Required Actions establish those remedial measures that must be taken within specified Completion Times when the requirements of an LCO are not met. This Specification establishes that:

a. Completion of the Required Actions within the specified Completion Times constitutes compliance with a Specification; and

b. Completion of the Required Actions is not required when an LCO is met within the specified Completion Time, unless otherwise specified.

There are two basic types of Required Actions. The first type of Required Action specifies a time limit in which the LCO must be met. This time limit is the Completion Time to restore a system or component or to restore variables to within specified limits. Whether stated as a Required Action or not, correction of the entered Condition is an action that may always be considered upon entering ACTIONS. The second type of Required Action specifies the

(continued)

BASES

LCO 2.0.2 (continued)

remedial measures that permit continued operation that is not further restricted by the Completion Time. In this case, compliance with the Required Actions provides an acceptable level of safety for continued operation.

Completing the Required Actions is not required when an LCO is met or is no longer applicable, unless otherwise stated in the individual Specifications.

The Completion Times of the Required Actions are also applicable when a system or component is removed from service intentionally. The reasons for intentionally relying on the ACTIONS include, but are not limited to, performance of Surveillances, preventive maintenance, corrective maintenance, or investigation of operational problems. Entering ACTIONS for these reasons must be done in a manner that does not compromise safety. Intentional entry into ACTIONS should not be made for operational convenience.

LCO 2.0.3

This specification is not applicable to a dry storage cask system because it describes conditions under which a power reactor must be shut down when an LCO is not met and an associated ACTION is not met or provided. The placeholder is retained for consistency with the power reactor technical specifications.

LCO 2.0.4

LCO 2.0.4 establishes limitations on changes in specified conditions in the Applicability when an LCO is not met. It precludes placing the HI-STORM 100 System in a specified condition stated in that Applicability (e.g., Applicability desired to be entered) when the following exist:

a. Facility conditions are such that the requirements of the LCO would not be met in the Applicability desired to be entered; and

b. Continued noncompliance with the LCO requirements, if the Applicability were entered, would result in being required to

(continued)

BASES

LCO 2.0.4 (continued)

exit the Applicability desired to be entered to comply with the Required Actions.

Compliance with Required Actions that permit continuing with dry fuel storage activities for an unlimited period of time in a specified condition provides an acceptable level of safety for continued operation. This is without regard to the status of the dry storage system. Therefore, in such cases, entry into a specified condition in the Applicability may be made in accordance with the provisions of the Required Actions. The provisions of this Specification should not be interpreted as endorsing the failure to exercise the good practice of restoring systems or components before entering an associated specified condition in the Applicability.

The provisions of LCO 2.0.4 shall not prevent changes in specified conditions in the Applicability that are required to comply with ACTIONS. In addition, the provisions of LCO 2.0.4 shall not prevent changes in specified conditions in the Applicability that are related to the unloading of an SFSC.

Exceptions to LCO 2.0.4 are stated in the individual Specifications. Exceptions may apply to all the ACTIONS or to a specific Required Action of a Specification.

LCO 2.0.5

LCO 2.0.5 establishes the allowance for restoring equipment to service under administrative controls when it has been removed from service or determined to not meet the LCO to comply with the ACTIONS. The sole purpose of this Specification is to provide an exception to LCO 2.0.2 (e.g., to not comply with the applicable Required Action(s)) to allow the performance of testing to demonstrate:

a. The equipment being returned to service meets the LCO; or

b. Other equipment meets the applicable LCOs.

(continued)

BASES

LCO 2.0.5 (continued)	The administrative controls ensure the time the equipment is returned to service in conflict with the requirements of the ACTIONS is limited to the time absolutely necessary to perform the allowed testing. This Specification does not provide time to perform any other preventive or corrective maintenance.
LCO 2.0.6	This specification is not applicable to a dry storage cask system because it describes conditions under which a power reactor must be shut down when an LCO is not met and an associated ACTION is not met or provided. The placeholder is retained for consistency with the power reactor technical specifications.
LCO 2.0.7	This specification is not applicable to a dry storage cask system because it describes conditions under which a power reactor must be shut down when an LCO is not met and an associated ACTION is not met or provided. The placeholder is retained for consistency with the power reactor technical specifications.

B 2.0 SURVEILLANCE REQUIREMENT (SR) APPLICABILITY

BASES

SRs

SR 2.0.1 through SR 2.0.4 establish the general requirements applicable to all Specifications and apply at all times, unless otherwise stated.

SR 2.0.1

SR 2.0.1 establishes the requirement that SRs must be met during the specified conditions in the Applicability for which the requirements of the LCO apply, unless otherwise specified in the individual SRs. This Specification is to ensure that Surveillances are performed to verify that systems and components meet the LCO and variables are within specified limits. Failure to meet a Surveillance within the specified Frequency, in accordance with SR 2.0.2, constitutes a failure to meet an LCO.

Systems and components are assumed to meet the LCO when the associated SRs have been met. Nothing in this Specification, however, is to be construed as implying that systems or components meet the associated LCO when:

a. The systems or components are known to not meet the LCO, although still meeting the SRs; or

b. The requirements of the Surveillance(s) are known to be not met between required Surveillance performances.

Surveillances do not have to be performed when the HI-STORM 100 System is in a specified condition for which the requirements of the associated LCO are not applicable, unless otherwise specified.

Surveillances, including Surveillances invoked by Required Actions, do not have to be performed on equipment that has been determined to not meet the LCO because the ACTIONS define the remedial measures that apply. Surveillances have to be met and performed in accordance with SR 2.0.2, prior to returning equipment to service. Upon completion of maintenance, appropriate post-maintenance testing is required. This includes ensuring applicable Surveillances

(continued)

BASES

SR 2.0.1 (continued)

are not failed and their most recent performance is in accordance with SR 2.0.2. Post maintenance testing may not be possible in the current specified conditions in the Applicability due to the necessary dry storage cask system parameters not having been established. In these situations, the equipment may be considered to meet the LCO provided testing has been satisfactorily completed to the extent possible and the equipment is not otherwise believed to be incapable of performing its function. This will allow dry fuel storage activities to proceed to a specified condition where other necessary post maintenance tests can be completed.

SR 2.0.2

SR 2.0.2 establishes the requirements for meeting the specified Frequency for Surveillances and any Required Action with a Completion Time that requires the periodic performance of the Required Action on a "once per..." interval.

SR 2.0.2 permits a 25% extension of the interval specified in the Frequency. This extension facilitates Surveillance scheduling and considers facility conditions that may not be suitable for conducting the Surveillance (e.g., transient conditions or other ongoing Surveillance or maintenance activities).

The 25% extension does not significantly degrade the reliability that results from performing the Surveillance at its specified Frequency. This is based on the recognition that the most probable result of any particular Surveillance being performed is the verification of conformance with the SRs. The exceptions to SR 2.0.2 are those Surveillances for which the 25% extension of the interval specified in the Frequency does not apply. These exceptions are stated in the individual Specifications as a Note in the Frequency stating, "SR 2.0.2 is not applicable."

As stated in SR 2.0.2, the 25% extension also does not apply to the initial portion of a periodic Completion Time that requires performance on a "once per..." basis. The 25% extension applies to each performance after the initial performance. The initial performance of the Required Action, whether it is a particular Surveillance or some other remedial action, is considered a single action with a single Completion Time. One reason for not allowing the 25% extension

(continued)

BASES

SR 2.0.2 (continued)

to this Completion Time is that such an action usually verifies that no loss of function has occurred by checking the status of redundant or diverse components or accomplishes the function of the affected equipment in an alternative manner.

The provisions of SR 2.0.2 are not intended to be used repeatedly merely as an operational convenience to extend Surveillance intervals or periodic Completion Time intervals beyond those specified.

SR 2.0.3

SR 2.0.3 establishes the flexibility to defer declaring affected equipment as not meeting the LCO or an affected variable outside the specified limits when a Surveillance has not been completed within the specified Frequency. A delay period of up to 24 hours or up to the limit of the specified Frequency, whichever is less, applies from the point in time that it is discovered that the Surveillance has not been performed in accordance with SR 2.0.2, and not at the time that the specified Frequency was not met.

This delay period provides adequate time to complete Surveillances that have been missed. This delay period permits the completion of a Surveillance before complying with Required Actions or other remedial measures that might preclude completion of the Surveillance.

The basis for this delay period includes consideration of HI-STORM 100 System conditions, adequate planning, availability of personnel, the time required to perform the Surveillance, the safety significance of the delay in completing the required Surveillance, and the recognition that the most probable result of any particular Surveillance being performed is the verification of conformance with the requirements. When a Surveillance with a Frequency based not on time intervals, but upon specified facility conditions, is discovered not to have been performed when specified, SR 2.0.3 allows the full delay period of 24 hours to perform the Surveillance.

SR 2.0.3 also provides a time limit for completion of Surveillances that become applicable as a consequence of changes in the specified conditions in the Applicability imposed by the Required Actions.

(continued)

SR 2.0.3 (continued)

Failure to comply with specified Frequencies for SRs is expected to be an infrequent occurrence. Use of the delay period established by SR 2.0.3 is a flexibility which is not intended to be used as an operational convenience to extend Surveillance intervals.

If a Surveillance is not completed within the allowed delay period, then the equipment is considered to not meet the LCO or the variable is considered outside the specified limits and the Completion Times of the Required Actions for the applicable LCO Conditions begin immediately upon expiration of the delay period. If a Surveillance is failed within the delay period, then the equipment does not meet the LCO, or the variable is outside the specified limits and the Completion Times of the Required Actions for the applicable LCO Conditions begin immediately upon the failure of the Surveillance.

Completion of the Surveillance within the delay period allowed by this Specification, or within the Completion Time of the ACTIONS, restores compliance with SR 2.0.1.

SR 2.0.4

SR 2.0.4 establishes the requirement that all applicable SRs must be met before entry into a specified condition in the Applicability.

This Specification ensures that system and component requirements and variable limits are met before entry into specified conditions in the Applicability for which these systems and components ensure safe conduct of dry fuel storage activities.

The provisions of this Specification should not be interpreted as endorsing the failure to exercise the good practice of restoring systems or components before entering an associated specified condition in the Applicability.

However, in certain circumstances, failing to meet an SR will not result in SR 2.0.4 restricting a change in specified condition. When a system, subsystem, division, component, device, or variable is

(continued)

BASES

SR 2.0.4 (continued)

outside its specified limits, the associated SR(s) are not required to be performed per SR 2.0.1, which states that Surveillances do not have to be performed on equipment that has been determined to not meet the LCO. When equipment does not meet the LCO, SR 2.0.4 does not apply to the associated SR(s) since the requirement for the SR(s) to be performed is removed. Therefore, failing to perform the Surveillance(s) within the specified Frequency does not result in an SR 2.0.4 restriction to changing specified conditions of the Applicability. However, since the LCO is not met in this instance, LCO 2.0.4 will govern any restrictions that may (or may not) apply to specified condition changes.

The provisions of SR 2.0.4 shall not prevent changes in specified conditions in the Applicability that are required to comply with ACTIONS. In addition, the provisions of LCO 2.0.4 shall not prevent changes in specified conditions in the Applicability that are related to the unloading of an SFSC.

The precise requirements for performance of SRs are specified such that exceptions to SR 2.0.4 are not necessary. The specific time frames and conditions necessary for meeting the SRs are specified in the Frequency, in the Surveillance, or both. This allows performance of Surveillances when the prerequisite condition(s) specified in a Surveillance procedure require entry into the specified condition in the Applicability of the associated LCO prior to the performance or completion of a Surveillance. A Surveillance that could not be performed until after entering the LCO Applicability would have its Frequency specified such that it is not "due" until the specific conditions needed are met. Alternately, the Surveillance may be stated in the form of a Note as not required (to be met or performed) until a particular event, condition, or time has been reached. Further discussion of the specific formats of SRs' annotation is found in Section 1.4, Frequency.

B 2.1 SFSC Integrity

B 2.1.1 Multi-Purpose Canister (MPC)

BASES

BACKGROUND

An OVERPACK with an empty MPC is placed in the spent fuel pool and loaded with fuel assemblies meeting the requirements of the Certificate of Compliance. A lid is then placed on the MPC. The OVERPACK and MPC are raised to the top of the spent fuel pool surface. The OVERPACK and MPC are then moved into the cask preparation area where dose rates are measured and the MPC lid is welded to the MPC shell and the welds are inspected and tested. The water is drained from the MPC cavity and vacuum drying is performed. The MPC cavity is backfilled with helium and leakage tested. Additional dose rates are measured and the MPC vent and drain cover plates and closure ring are installed and welded. Inspections are performed on the welds. The OVERPACK lid is installed and secured. The annulus space between the MPC and OVERPACK is drained, vacuum dried and backfilled with helium gas. The OVERPACK seals are tested for leakage. Contamination measurements are completed prior to moving the OVERPACK and MPC to the ISFSI.

MPC cavity vacuum drying is utilized to remove residual moisture from the MPC fuel cavity after the MPC has been drained of water. Any water that has not drained from the fuel cavity evaporates from the fuel cavity due to the vacuum. This is aided by the temperature increase due to the temperature of the fuel and by the heat added to the MPC from the optional warming pad, if used.

After the completion of vacuum drying, the MPC cavity is backfilled with helium to a pressure greater than atmospheric pressure.

(continued)

BASES (continued)

BACKGROUND (continued)

Backfilling of the MPC fuel cavity with helium promotes gaseous heat dissipation and the inert atmosphere protects the fuel cladding. Providing a helium pressure greater than atmospheric pressure at room temperature (70°F), eliminates air in-leakage over the life of the MPC because the cavity pressure rises due to heat up of the confined gas by the fuel decay heat during storage. In-leakage of air could be harmful to the fuel. Prior to moving the SFSC to the storage pad, the MPC helium leak rate is determined to ensure that the fuel is confined.

APPLICABLE SAFETY ANALYSIS

The confinement of radioactivity during the storage of spent fuel in the MPC is ensured by the multiple confinement boundaries and systems. The barriers relied on are the fuel pellet matrix, the metallic fuel cladding tubes in which the fuel pellets are contained, and the MPC in which the fuel assemblies are stored. Long-term integrity of the fuel and cladding depend on storage in an inert atmosphere. This is accomplished by removing water from the MPC and backfilling the cavity with an inert gas at a positive pressure (> 1 atm). The thermal analyses of the MPC assume that the MPC cavity is filled with dry helium.

LCO

A dry, helium filled and sealed MPC establishes an inert heat removal environment necessary to ensure the integrity of the multiple confinement boundaries. Moreover, it also ensures that there will be no air in-leakage into the MPC cavity that could damage the fuel cladding over the storage period.

APPLICABILITY

The dry, sealed and inert atmosphere is required to be in place during TRANSPORT OPERATIONS and STORAGE OPERATIONS to ensure both the confinement barriers and heat removal mechanisms are in place during these operating

(continued)

BASES

APPLICABILITY (continued)

periods. These conditions are not required during LOADING OPERATIONS or UNLOADING OPERATIONS as these conditions are being established or removed, respectively during these periods in support of other activities being performed with the stored fuel.

ACTIONS

A note has been added to the ACTIONS which states that, for this LCO, separate Condition entry is allowed for each SFSC. This is acceptable since the Required Actions for each Condition provide appropriate compensatory measures for each MPC not meeting the LCO. Subsequent SFSCs that do not meet the LCO are governed by subsequent Condition entry and application of associated Required Actions.

A.1

If the cavity vacuum drying pressure limit has been determined not to be met during TRANSPORT OPERATIONS or STORAGE OPERATIONS, an engineering evaluation is necessary to determine the potential quantity of moisture left within the MPC cavity. Since moisture remaining in the cavity during these modes of operation may represent a long-term degradation concern, immediate action is not necessary. The Completion Time is sufficient to complete the engineering evaluation commensurate with the safety significance of the CONDITION.

A.2

Once the quantity of moisture potentially left in the MPC cavity is determined, a corrective action plan shall be developed and implemented to the extent necessary to return the MPC to an analyzed condition. Since the quantity of moisture estimated

(continued)

BASES

ACTIONS

A.2 (continued)

under Required Action A.1 can range over a broad scale, different recovery strategies may be necessary. Since moisture remaining in the cavity during these modes of operation may represent a long-term degradation concern, immediate action is not necessary. The Completion Time is sufficient to develop and complete the corrective actions commensurate with the safety significance of the CONDITION.

B.1

If the helium backfill pressure limit has been determined not to be met during TRANSPORT OPERATIONS or STORAGE OPERATIONS, an engineering evaluation is necessary to determine the helium pressure within the MPC cavity. Since too much helium in the MPC cavity during these modes represents a potential overpressure concern, an engineering evaluation shall be performed in a timely manner. The Completion Time is sufficient to complete the engineering evaluation commensurate with the safety significance of the CONDITION.

B.2

Once the helium pressure in the MPC cavity is determined, a corrective action plan shall be developed and initiated to the extent necessary to return the MPC to an analyzed condition. Since the helium pressure estimated under Required Action B.1 can range over a broad scale, different recovery strategies may be necessary. Since elevated helium pressures existing in the MPC cavity represent potential overpressure concerns, corrective actions should be developed and implemented in a timely manner. The Completion Time is sufficient to develop and complete the corrective actions commensurate with the safety significance of the CONDITION.

(continued)

BASES

ACTIONS
(continued)

C.1

If the helium leak rate limit has been determined not to be met during TRANSPORT OPERATIONS or STORAGE OPERATIONS, an engineering evaluation is necessary to determine the potential leak rate and quantity of helium remaining within the cavity. The significance of the situation is mitigated by the existence of the OVERPACK containment boundary. Since an increased helium leak rate represents a potential challenge to MPC heat removal and the off-site doses calculated in the TSAR confinement analyses, reasonably rapid action is warranted. The Completion Time is sufficient to complete the engineering evaluation commensurate with the safety significance of the CONDITION.

C.2

Once the cause and consequences of the elevated leak rate from the MPC are determined, a corrective action plan shall be developed and initiated to the extent necessary to return the MPC to an analyzed condition. Since the recovery mechanisms can range over a broad scale, based on the evaluation performed under Required Action C.1, different recovery strategies may be necessary. Since an elevated helium leak rate represents a challenge to heat removal rates and off-site doses, reasonably rapid action is required. The Completion Time is sufficient to develop and complete the corrective actions commensurate with the safety significance of the CONDITION.

(continued)

BASES

ACTIONS (continued)

D.1

If the MPC fuel cavity cannot be successfully returned to a safe, analyzed condition, the fuel must be placed in a safe condition in the spent fuel pool. The Completion Time is reasonable based on the time required to move the OVERPACK to the cask preparation area, perform fuel cooldown operations, re-flood the MPC, cut the MPC lid welds, move the TRANSFER CASK into the spent fuel pool, remove the MPC lid, and remove the spent fuel assemblies in an orderly manner and without challenging personnel.

SURVEILLANCE REQUIREMENTS

SR 2.1.1.1, SR 2.1.1.2, and SR 2.1.1.3

The long-term integrity of the stored fuel is dependent on storage in a dry, inert environment. Cavity dryness is demonstrated by evacuating the cavity to a very low absolute pressure and verifying that the pressure is held over a specified period of time. A low vacuum pressure is an indication that the cavity is dry. Having the proper helium backfill pressure ensures adequate heat transfer from the fuel to the fuel basket and surrounding structure of the MPC. Meeting the helium leak rate limit ensures there is adequate helium in the MPC for long term storage and the leak rate assumed in the confinement analyses remains bounding for off-site dose.

All three of these surveillances must be successfully performed during LOADING OPERATIONS to ensure that the conditions are established for TRANSPORT OPERATIONS and STORAGE OPERATIONS which preserve the analysis basis supporting the cask design.

REFERENCES

1. FSAR Sections 4.4, 7.2, 7.3 and 8.1

B 2.1 SFSC Integrity

B 2.1.2 OVERPACK

BASES

BACKGROUND

An OVERPACK with an empty MPC is placed in the spent fuel pool and loaded with fuel assemblies meeting the requirements of the Certificate of Compliance. A lid is then placed on the MPC. The OVERPACK and MPC are raised to the top of the spent fuel pool surface. The OVERPACK and MPC are then moved into the cask preparation area where dose rates are measured and the MPC lid is welded to the MPC shell and the welds are inspected and tested. The water is drained from the MPC cavity and vacuum drying is performed. The MPC cavity is backfilled with helium and leakage tested. Additional dose rates are measured and the MPC vent and drain cover plates and closure ring are installed and welded. Inspections are performed on the welds. The OVERPACK lid is installed and secured. The annulus space between the MPC and OVERPACK is drained, vacuum dried and backfilled with helium gas. The OVERPACK seals are tested for leakage. Contamination measurements are completed prior to moving the OVERPACK and MPC to the ISFSI.

Vacuum drying of the annulus between the MPC and the OVERPACK is performed to remove residual moisture from the annulus after it has been drained of water. Water that has not drained from the annulus evaporates from the annulus due to the vacuum. This is aided by the temperature increase due to the temperature of the fuel and by the heat added to the MPC from the optional warming pad, if used.

(continued)

BASES

BACKGROUND (continued)

Backfilling of the OVERPACK annulus with helium promotes heat transfer from the MPC to the OVERPACK structure. Providing a helium pressure greater than atmospheric pressure ensures that there will be no in-leakage of air over the life of the SFSC. In-leakage of air could degrade the heat transfer features of the SFSC. Prior to moving the SFSC to the storage pad, the OVERPACK annulus helium leak rate is determined to ensure that sufficient helium remains to provide adequate heat transfer.

APPLICABLE SAFETY ANALYSIS

The confinement of radioactivity during the storage of spent fuel in the MPC is ensured by the multiple confinement boundaries and systems. The barriers relied on are the fuel pellet matrix, the metallic fuel cladding tubes in which the fuel pellets are contained, and the MPC in which the fuel assemblies are stored. No confinement credit is taken for the OVERPACK boundary. Long-term integrity of the spent fuel depends on the ability of the SFSC to reject heat to the environment. This is accomplished, in part, by retaining helium in the annulus between the MPC and the OVERPACK. By removing water from the annulus, the boiling of residual water and associated pressurization of the annulus during storage at the ISFSI is avoided. Backfilling the annulus with an inert gas optimizes the ability of the SFSC to transfer heat from the MPC to the OVERPACK. In addition, the thermal analyses assume that the annulus is filled with dry helium.

LCO

A dry, helium filled and sealed OVERPACK annulus establishes an inert cooling space necessary to ensure heat rejection to the environment. Moreover, it also ensures that there will be no air in-leakage into the annulus that could negatively affect heat transfer.

(continued)

BASES (continued)

APPLICABILITY

The dry, sealed and inert atmosphere is required to be in place during TRANSPORT OPERATIONS and STORAGE OPERATIONS to ensure a heat transfer mechanism is in place during these operating periods. These conditions are not required during LOADING OPERATIONS or UNLOADING OPERATIONS as these conditions are being established or removed, respectively during these periods in support of other activities being performed with the stored MPC.

ACTIONS

A note has been added to the ACTIONS which states that, for this LCO, separate Condition entry is allowed for each SFSC. This is acceptable since the Required Actions for each Condition provide appropriate compensatory measures for each MPC not meeting the LCO. Subsequent SFSC's that do not meet the LCO are governed by subsequent Condition entry and application of associated Required Actions.

A.1

If the OVERPACK annulus vacuum drying pressure limit has been determined not to be met during TRANSPORT OPERATIONS or STORAGE OPERATIONS, an engineering evaluation is necessary to determine the potential quantity of moisture left within the annulus. Since moisture remaining in the annulus during these modes of operation may represent a long-term degradation concern, immediate action is not necessary. The Completion Time is sufficient to complete the engineering evaluation commensurate with the safety significance of the CONDITION.

A.2

Once the quantity of moisture potentially left in the OVERPACK annulus is determined, a corrective action plan shall be developed and actions completed to return the SFSC to an analyzed condition. Since the quantity of moisture estimated under Required Action A.1 can range over a broad

(continued)

BASES

ACTIONS
(continued)

A.2 (continued)

scale, different recovery strategies may be necessary. Since moisture remaining in the annulus during these modes of operation represents a long-term degradation concern, immediate action is not necessary. The Completion Time is sufficient to develop and complete the corrective actions commensurate with the safety significance of the CONDITION.

B.1

If the helium backfill pressure limit has been determined not to be met during TRANSPORT OPERATIONS or STORAGE OPERATIONS, an engineering evaluation is necessary to determine the quantity of helium within the OVERPACK annulus. Since abnormal quantities of helium in the annulus during these modes represents a minimal impact, immediate action is not necessary. The Completion Time is sufficient to complete the engineering evaluation commensurate with the safety significance of the CONDITION.

B.2

Once the quantity of helium in the annulus is determined, a corrective action plan shall be developed and initiated to the extent necessary to return the SFSC to an analyzed condition. Since the quantity of helium estimated under Required Action B.1 can range over a broad scale, different recovery strategies may be necessary. Since abnormal quantities of helium in the annulus during these modes represents a minimal impact, immediate action is not necessary. The Completion Time is sufficient to develop and initiate the corrective actions commensurate with the safety significance of the CONDITION.

(continued)

BASES

ACTIONS
(continued)

C.1

If the OVERPACK helium leak rate limit has been determined not to be met during TRANSPORT OPERATIONS or STORAGE OPERATIONS, an engineering evaluation is necessary to determine the potential leak rate and quantity of helium remaining within the annulus. The significance of the situation is mitigated by the existence of the MPC confinement boundary. Since abnormal leak rates from the annulus during these modes represents a minimal impact, immediate action is not necessary. The Completion Time is sufficient to complete the engineering evaluation commensurate with the safety significance of the CONDITION.

C.2

Once the cause and consequences of the elevated leak rate from the OVERPACK are determined, a corrective action plan shall be developed and initiated to the extent necessary to return the MPC to an analyzed condition. Since the recovery mechanisms can range over a broad scale, based on the evaluation performed under Required Action C.1, different recovery strategies may be necessary. Since abnormal leak rates from the annulus during these modes represents a minimal impact, immediate action is not necessary. The Completion Time is sufficient to develop and initiate the corrective actions commensurate with the safety significance of the CONDITION.

(continued)

BASES (continued)

SURVEILLANCE REQUIREMENTS

SR 2.1.2.1, SR 2.1.2.2, and SR 2.1.2.3

The long-term integrity of the stored fuel is dependent, in part, on adequate heat transfer from the stored fuel to the environment. OVERPACK annulus dryness is demonstrated by evacuating the annulus to a very low absolute pressure and verifying that the pressure is held over a specified period of time. A low vacuum pressure is an indication that the annulus is dry. Having the proper helium backfill pressure ensures adequate heat transfer from the MPC to the OVERPACK structure. Meeting the helium leak rate limit ensures there is adequate helium in the annulus for long term storage.

All three of these surveillances must be successfully performed during LOADING OPERATIONS to ensure that the conditions are established for TRANSPORT OPERATIONS and STORAGE OPERATIONS which preserve the analysis basis supporting the cask design.

REFERENCES

1. FSAR Sections 4.4, 7.2, 7.3 and 8.1

B 2.1 SFSC INTEGRITY

B 2.1.3 SFSC Lifting Requirements

BASES

BACKGROUND	A loaded SFSC is transported between the loading facility and the ISFSI using a transporter. The SFSC may be handled in either the horizontal or vertical orientation depending on the site cask handling limitations. The height to which the SFSC is lifted is limited to ensure that the structural integrity of the SFSC is not compromised should the SFSC be dropped. For lifting of the loaded OVERPACK using devices which are integral to a structure governed by 10CFR Part 50 regulations, 10CFR50 requirements apply.
APPLICABLE SAFETY ANALYSIS	The structural analyses of the SFSC demonstrate that the drop of a loaded SFSC from the Technical Specification height limits to a surface having the characteristics described in the Appendix B to Certificate of Compliance 72-1008 will not compromise SFSC integrity or cause physical damage to the contained fuel assemblies.
LCO	Limiting the SFSC lifting height during TRANSPORT OPERATIONS maintains the operating conditions of the SFSC within the design and analysis basis. The maximum lifting height is a function of the SFSC design and the orientation that the SFSC is carried. The lifting height requirements are specified in LCO 2.1.3.a for the vertical and horizontal orientations. Appendix B to Certificate of Compliance 72-1008 provides the characteristics of the drop surface assumed in the analyses. As required by 10 CFR 72.212(b)(3), each licensee must "...determine whether or not the reactor site parameters...are enveloped by the cask design bases..." Therefore, licensees must evaluate the storage pad and, if applicable, the site transport route to assure that they are bounded by the features specified in the CoC. (continued)

BASES

LCO (continued)

Alternatively, LCO 2.1.3.b allows the use of lifting devices designed in accordance with ANSI N14.6 and having redundant drop protection design features. If a suitably designed lifting device is used, dropping the SFSC is not considered credible, and the lift heights of LCO 2.1.3.a do not apply.

Alternatively, LCO 2.1.3.c allows for site-specific transport conditions which are not encompassed by those of LCO 2.1.3.a or 2.1.3.b. Under this alternative, the licensee shall evaluate the site-specific conditions to ensure that drop accident loads do not exceed 60 g's. This alternative analysis shall be commensurate with the analysis which forms the basis for LCO 2.1.3.a.

APPLICABILITY

The APPLICABILITY is modified by a note which states that the LCO is not applicable while the transporter is in the FUEL BUILDING or is being handling by a device providing support from underneath. The first part of the note is acceptable based on the relatively short duration of time TRANSPORT OPERATIONS take place in the FUEL BUILDING. This LCO does not apply if the SFSC is supported from underneath (e.g., air pads, heavy haul trailer or rail car) because the OVERPACK is not being lifted and a drop accident is not credible.

This LCO is applicable outside of the FUEL BUILDING during TRANSPORT OPERATIONS when the SFSC is being lifted or otherwise suspended above the surface below. This includes movement of the SFSC while suspended from a transporter (i.e., a vertical crawler). It is not applicable during STORAGE OPERATIONS since the SFSC is not considered lifted.

(continued)

BASES (continued)

ACTIONS

A note has been added to the ACTIONS which states that, for this LCO, separate Condition entry is allowed for each SFSC. This is acceptable since the Required Actions for each Condition provide appropriate compensatory measures for each SFSC not meeting the LCO. Subsequent SFCSs that don't meet the LCO are governed by subsequent Condition entry and application of associated Required Actions.

A.1

If none of the SFSC lifting requirements are met, immediate action must be initiated and completed expeditiously to comply with one of the three lifting requirements in order to preserve the SFSC design and analysis basis.

SURVEILLANCE REQUIREMENTS

SR 2.1.3.1

The SFSC lifting requirements of LCO 2.1.3 must be verified to be met after the SFSC is suspended from, or secured in the transporter and prior to the transporter beginning to move the SFSC to or from the ISFSI. This ensures potential drop accidents during TRANSPORT OPERATIONS are bounded by the drop analyses.

For compliance with LCO 2.1.3.a, lifting heights are to be measured from the lowest surface on the OVERPACK to the potential impact surface.

REFERENCES

1. FSAR, Sections 3.4.10, 8.1, and 8.3

B 2.1 SFSC INTEGRITY

B 2.1.4 Fuel Cool-Down

BASES

BACKGROUND

In the event that an MPC must be unloaded, the OVERPACK with its enclosed MPC is returned to the cask preparation area to begin the process of fuel unloading. The MPC closure ring, and vent and drain port cover plates are removed. The MPC gas is sampled to determine the integrity of the spent fuel cladding. The MPC is attached to the Cool-Down System. The Cool-Down System is a closed-loop forced ventilation gas cooling system that cools the fuel assemblies by cooling the surrounding helium gas.

Following fuel cool-down, the MPC is then re-flooded with water and the MPC lid weld is removed leaving the MPC lid in place. The OVERPACK and MPC are placed in the spent fuel pool and the MPC lid is removed. The fuel assemblies are removed from the MPC and the MPC and transfer cask are removed from the spent fuel pool and decontaminated.

Reducing the fuel cladding temperatures significantly reduces the temperature gradients across the cladding thus minimizing thermally-induced stresses on the cladding during MPC re-flooding. Reducing the MPC internal temperatures eliminates the risk of high MPC pressure due to sudden generation of steam during re-flooding.

APPLICABLE SAFETY ANALYSIS

The confinement of radioactivity during the storage of spent fuel in the MPC is ensured by the multiple confinement boundaries and systems. The barriers relied on are the fuel pellet matrix, the metallic fuel cladding tubes in which the fuel pellets are contained, and the MPC in which the fuel assemblies are stored. Long-term integrity of the fuel and cladding depend on minimizing thermally-induced stresses to the cladding.

(continued)

BASES

APPLICABLE SAFETY ANALYSIS (continued)	This is accomplished during the unloading operations by lowering the MPC internal temperatures prior to MPC re-flooding. The Integrity of the MPC depends on maintaining the internal cavity pressures within design limits. This is accomplished by reducing the MPC internal temperatures such that there is no sudden formation of steam during MPC re-flooding. (Ref. 1).
LCO	Monitoring the circulating MPC gas exit temperature ensures that there will be no large thermal gradient across the fuel assembly cladding during re-flooding which could be potentially harmful to the cladding. The temperature limit specified in the LCO was selected to ensure that the MPC gas exit temperature will closely match the desired fuel cladding temperature prior to re-flooding the MPC. The temperature was selected to be lower than the boiling temperature of water with an additional margin.
APPLICABILITY	The MPC helium gas exit temperature is measured during UNLOADING OPERATIONS after the OVERPACK and integral MPC are back in the FUEL BUILDING and are no longer suspended from, or secured in, the transporter. Therefore, the Fuel Cool-Down LCO does not apply during TRANSPORT OPERATIONS and STORAGE OPERATIONS. A note has been added to the APPLICABILITY for LCO 2.1.4 which states that the LCO is only applicable during wet UNLOADING OPERATIONS. This is acceptable since the intent of the LCO is to avoid uncontrolled MPC pressurization due to water flashing during re-flooding operations. This is not a concerning for dry UNLOADING OPERATIONS.
ACTIONS	A note has been added to the ACTIONS which states that, for this LCO, separate Condition entry is allowed for each MPC. This is acceptable since the Required Actions for each Condition provide appropriate compensatory measures for

(continued)

BASES

ACTIONS (continued)

each MPC not meeting the LCO. Subsequent MPCs that do not meet the LCO are governed by subsequent Condition entry and application of associated Required Actions.

A.1

If the MPC helium gas exit temperature limit is not met, actions must be taken to restore the parameters to within the limits before re-flooding the MPC. Failure to successfully complete fuel cool-down could have several causes, such as failure of the cool down system, inadequate cool down, or clogging of the piping lines. The Completion Time is sufficient to determine and correct most failure mechanisms and proceeding with activities to flood the MPC cavity with water are prohibited.

A.2

If the LCO is not met, in addition to performing Required Action A.1 to restore the gas temperature to within the limit, the user must ensure that the proper conditions exist for the transfer of heat from the MPC to the surrounding environs to ensure the fuel cladding remains below the short term temperature limit. If the OVERPACK is located in a relatively open area such as a typical refuel floor, no additional actions are necessary. However, if the OVERPACK is located in a structure such as a decontamination pit or fuel vault, additional actions may be necessary depending on the heat load of the stored fuel.

Three acceptable options for ensuring adequate heat transfer for a OVERPACK located in a pit or vault are provided below, based on an MPC loaded with fuel assemblies with design basis heat load in every storage location. Users may develop other alternatives on a site-specific basis, considering actual fuel loading and decay heat generation.

(continued)

BASES

ACTIONS

A.2 (continued)

1. Ensure the annulus between the MPC and the OVERPACK is filled with water. This places the system in a heat removal configuration which is bounded by the FSAR thermal evaluation of the system assuming a vacuum in the MPC. The annulus is open to the ambient environment which limits the temperature of the ultimate heat sink (the water in the annulus) and, therefore, the MPC shell to 212° F.

2. Remove the OVERPACK from the pit or vault and place it in an open area such as the refuel floor with a reasonable amount of clearance around the cask and not near a significant source of heat.

3. Supply nominally 1000 SCFM of ambient (or cooler) air to the space inside the vault at the bottom of the OVERPACK to aid the convection heat transfer process. This quantity of air is sufficient to limit the temperature rise of the air in the cask-to-vault annulus to approximately 60° F at design basis maximum heat load while providing enhanced cooling of the cask by the forced flow.

Twenty-four hours is an acceptable time frame to allow for completion of Required Action A.2 based on a thermal evaluation of a OVERPACK located in a pit or vault. Eliminating all credit for passive cooling mechanisms with the cask emplaced in the vault, the thermal inertia of the cask (in excess of 20,000 Btu/° F) will limit the rate of adiabatic temperature rise with design basis maximum heat load to less than 4° F per hour. Thus, the fuel cladding temperature rise in 24 hours will be less than 100° F. Large short term temperature margins exist to preclude any cladding integrity concerns under this temperature rise.

(continued)

BASES

SURVEILLANCE REQUIREMENTS

SR 2.1.4.1

The long-term integrity of the stored fuel is dependent on the material condition of the fuel assembly cladding. By minimizing thermally-induced stresses across the cladding the integrity of the fuel assembly cladding is maintained. The integrity of the MPC is dependent on controlling the internal MPC pressure. By controlling the MPC internal temperature prior to re-flooding the MPC there is no formation of steam during MPC re-flooding.

The MPC helium exit gas temperature limit ensures that there will be no large thermal gradients across the fuel assembly cladding during MPC re-flooding and no formation of steam which could potentially overpressurize the MPC.

Fuel cool down must be performed successfully on each SFSC before the initiation of MPC re-flooding operations to ensure the design and analysis basis are preserved.

REFERENCES

1. FSAR, Sections 4.4.1, 4.5.1.1.4, and 8.3.2.

B 2.2 SFSC Radiation Protection

B 2.2.1 OVERPACK Average Surface Dose Rates

BASES

BACKGROUND	The regulations governing the operation of an ISFSI set limits on the control of occupational radiation exposure and radiation doses to the general public (Ref. 1). Occupational radiation exposure should be kept as low as reasonably achievable (ALARA) and within the limits of 10CFR Part 20. Radiation doses to the public are limited for both normal and accident conditions.
APPLICABLE SAFETY ANALYSIS	The OVERPACK average surface dose rates are not an assumption in any accident analysis, but are used to ensure compliance with regulatory limits on occupational dose and dose to the public.
LCO	The limits on OVERPACK average surface dose rates are based on the shielding analysis of the HI-STAR 100 System (Ref. 2). The limits were selected to minimize radiation exposure to the general public and maintain occupational dose ALARA to personnel working in the vicinity of the SFSCs.
APPLICABILITY	The average OVERPACK surface dose rates apply during TRANSPORT OPERATIONS and STORAGE OPERATIONS. Radiation doses during STORAGE OPERATIONS are monitored for the OVERPACK by the SFSC user in accordance with the plant-specific radiation protection program required by 10CFR72.212(b)(6).

(continued)

BASES (continued)

ACTIONS

A note has been added to the ACTIONS which states that, for this LCO, separate Condition entry is allowed for each SFSC. This is acceptable since the Required Actions for each Condition provide appropriate compensatory measures for each SFSC not meeting the LCO. Subsequent SFSCs that don't meet the LCO are governed by subsequent Condition entry and application of associated Required Actions.

A.1

If the OVERPACK average surface dose rates are not within limits, it could be an indication that a fuel assembly was inadvertently loaded into the MPC that did not meet the specifications in Appendix B of the Certificate of Compliance. Administrative verification of the MPC fuel loading, by means such as review of video recordings and records of the loaded fuel assembly serial numbers, can establish whether a mis-loaded fuel assembly is the cause of the out of limit condition. The Completion Time is based on the time required to perform such a verification.

A.2

If the OVERPACK average surface dose rates are not within limits, and it is determined that the MPC was loaded with the correct fuel assemblies, an analysis may be performed. This analysis will determine if the OVERPACK dose rates would result in the ISFSI offsite or occupational doses exceeding regulatory limits in 10 CFR Part 20 or 10 CFR Part 72.

B.1

If it is verified that the correct fuel was not loaded or that the ISFSI offsite radiation protection requirements of 10 CFR Part 20 or 10 CFR Part 72 will not be met with the OVERPACK average surface dose rates above the LCO limit, the fuel

(continued)

BASES

ACTIONS (continued)

assemblies must be placed in a safe condition in the spent fuel pool. The Completion Time is reasonable based on the time required to move the SFSC to the cask preparation area, perform fuel cooldown operations, re-flood the MPC, cut the MPC lid welds, move the SFSC into the spent fuel pool, remove the MPC lid, and remove the spent fuel assemblies in an orderly manner and without challenging personnel.

SURVEILLANCE REQUIREMENTS

SR 2.2.1.1

This SR is modified by two notes. The first note requires dose rate measurements to be taken after the MPC has been vacuum dried. This ensures that the dose rates measured are indicative of minimal shielding conditions with no shielding provided by the water in the MPC. The second note requires the OVERPACK average surface dose rates to be measured by performing this SR after receipt, and prior to storage if the OVERPACK was loaded at an off-site facility and transported to another facility for storage. This provides assurance that dose rates remain within the LCO limits after handling and transporting the OVERPACK between sites.

This SR ensures that the OVERPACK average surface dose rates are within the LCO limits prior to moving the SFSC to the ISFSI. Surface dose rates are measured approximately at the locations indicated on Figure 2.2.1-1 following standard industry practices for determining average dose rates for large containers. Measurements at approximate locations to those shown on Figure 2.2.1-1 are acceptable provided the radial steel channel members are avoided.

REFERENCES

1. 10 CFR Parts 20 and 72.
2. FSAR Sections 5.1 and 8.1.6.

B 2.2 SFSC Radiation Protection

B 2.2.2 SFSC Surface Contamination

BASES

BACKGROUND	An SFSC is immersed in the spent fuel pool in order to load the spent fuel assemblies. As a result, the surface of the SFSC may become contaminated with the radioactive material in the spent fuel pool water. This contamination is removed prior to moving the SFSC to the ISFSI in order to minimize the radioactive contamination to personnel or the environment. This allows dry fuel storage activities to proceed without additional radiological controls to prevent the spread of contamination and reduces personnel dose due to the spread of loose contamination or airborne contamination. This is consistent with ALARA practices.
APPLICABLE SAFETY ANALYSIS	The radiation protection measures implemented at the ISFSI are based on the assumption that the exterior surfaces of the SFSC's have been decontaminated. Failure to decontaminate the surfaces of theSFSC's could lead to higher-than-projected occupational doses and potential site contamination.
LCO	Removable surface contamination on the OVERPACK exterior surfaces and accessible surfaces of the MPC is limited to 1000 dpm/100 cm^2 from beta and gamma sources and 20 dpm/100 cm^2 from alpha sources. These limits are taken from the guidance in IE Circular 81-07 (Ref. 2) and are based on the minimum level of activity that can be routinely detected under a surface contamination control program using direct survey methods. Only loose contamination is controlled, as fixed contamination will not result from the SFSC loading process. Experience has shown that these limits are low enough to prevent the spread of contamination to clean areas and are significantly less than the levels which would cause significant personnel skin dose.

(continued)

BASES

LCO (continued)

LCO 2.2.2 requires removable contamination to be within the specified limits for the exterior surfaces of the OVERPACK and accessible portions of the MPC. The location and number of surface swipes used to determine compliance with this LCO are determined based on standard industry practice and the user's plant-specific contamination measurement program for objects of this size. Accessible portions of the MPC means the upper portion of the MPC external shell wall accessible after the inflatable annulus seal is removed and before the annulus shield ring is installed. The user shall determine a reasonable number and location of swipes for the accessible portion of the MPC. The objective is to determine a removable contamination value representative of the entire upper circumference of the MPC, while implementing sound ALARA practices.

APPLICABILITY

The requirements of this LCO must be met during TRANSPORT OPERATIONS and STORAGE OPERATIONS to minimize the potential for spreading contamination. Measurement of the OVERPACK and MPC surface contamination is unnecessary during UNLOADING OPERATIONS as surface contamination would have been measured prior to moving the subject TRANSFER CASK to the ISFSI.

ACTIONS

A note has been added to the ACTIONS which states that, for this LCO, separate Condition entry is allowed for each TRANSFER CASK. This is acceptable since the Required Actions for each Condition provide appropriate compensatory measures for each TRANSFER CASK not meeting the LCO. Subsequent TRANSFER CASKs that do not meet the LCO are governed by subsequent Condition entry and application of associated Required Actions.

(continued)

BASES

ACTIONS (continued)

A.1

If the removable surface contamination of an SFSC that has been loaded with spent fuel is not within the LCO limits, action must be initiated to decontaminate the SFSC and bring the removable surface contamination within limits. The Completion Time of 7 days is appropriate given that surface contamination does not affect the safe storage of the spent fuel assemblies.

SURVEILLANCE REQUIREMENTS

SR 2.2.2.1

This SR is modified by a note which requires the SFSC surface contamination to be measured by performing this SR after receipt, and prior to storage if the OVERPACK was loaded at an off-site facility and transported to another facility for storage. This provides assurance that contamination levels remain within the LCO limits after handling and transporting the OVERPACK between sites.

This SR verifies that the removable surface contamination on the OVERPACK and accessible portions of the MPC is less than the limits in the LCO. The Surveillance is performed using smear surveys to detect removable surface contamination. The Frequency requires performing the verification during LOADING OPERATIONS in order to confirm that the SFSC can be moved to the ISFSI without spreading loose contamination.

REFERENCES

1. FSAR Sections 8.1.5 and 8.1.6.
2. NRC IE Circular 81-07.

APPENDIX 12.B

COMMENT RESOLUTION LETTERS

FOR THE REVIEW OF THE HI-STAR 100 SPENT FUEL STORAGE CASK SYSTEM

(95 Pages Including this Page)

HOLTEC INTERNATIONAL

Holtec Center, 555 Lincoln Drive West, Marlton, NJ 08053

Telephone (609) 797-0900
Fax (609) 797-0909

BY FAX AND MAIL

July 9, 1998

Mr. Mark Delligatti
Senior Project Manager
Spent Fuel Licensing Section, SFPO, NMSS
United States Regulatory Commission
11555 Rockville Pike
Rockville, MD20852

Subject: HI-STAR 100 Topical Safety Analysis Report, Revision 7
Comments Resolution

Reference: USNRC Docket No. 72-1008
Holtec Project 5014; Comment Resolution Letter No. 1

Dear Mr. Delligatti:

In accordance with the July 8, 1998 telephone conference, Holtec International herein submits the resolutions to the NRC's comments which were agreed to during the discussions. The proposed resolutions will be incorporated into the next revision of the HI-STAR 100 Topical Safety Analysis Report (TSAR) following completion of the Safety Evaluation Report (SER). As appropriate, additional materials will be submitted to the NRC to support SER preparation activities.

CRITICALITY

NRC Comment

Specify a minimum ^{10}B loading for the MPC-68 Boral.

Holtec Resolution

The appropriate Design Drawings, Bills-of-Material, criticality analyses, principal design criteria, technical specifications, and general discussions in the TSAR will be revised to specify that the minimum ^{10}B areal density for the MPC-68 fuel basket is 0.0372g/cm^2. Specifically, Figures 2.1.2, 6.2.1, and 12.3.3 will be deleted.

HOLTEC INTERNATIONAL

Holtec Center, 555 Lincoln Drive West, Marlton, NJ 08053

Telephone (609) 797-0900
Fax (609) 797-0909

NRC Comment

Revise the criticality chapter to provide greater clarity that the double contingency requirement of 10CFR72 is met.

Holtec Resolution

Holtec will revise the criticality chapter to specifically state and conclude that double contingency requirements of 10CFR72 are met.

SHIELDING

NRC Comment

The NRC requires the input files for the SAS2H runs.

Holtec Resolution

Holtec will provide the NRC with copies of the SAS2H input files on July 10, 1998.

NRC Comment

Revise shield model diagrams to provide appropriately dimensioned figures.

Holtec Resolution

Holtec will revise the MCNP figures (Figures 5.3.1 through 5.3.6) in the shielding chapter to provide the required dimensional information. Revised draft figures will be submitted to the NRC by July 22, 1998 to facilitate the final shield design review.

NRC Comment

Provide additional justification for the dose rates proposed as acceptance criteria in Technical Specification 12.3.7, and for the 20 percent margin on acceptance criteria in Technical Specification 12.3.22.

HOLTEC INTERNATIONAL

Holtec Center, 555 Lincoln Drive West, Marlton, NJ 08053

Telephone (609) 797-0900
Fax (609) 797-0909

Holtec Resolution

Technical Specifications 12.3.7 and 12.3.22 will be revised to provide justified dose rate acceptance criteria.

STRUCTURAL

NRC Issue

The NRC requested that the two outermost intermediate shells of the HI-STAR 100 overpack be fabricated with full penetration welds on all longitudinal and circumferential welds.

Holtec Resolution

Holtec will revise the HI-STAR 100 overpack Design Drawings to specify that full penetration welds will be used in the fabrication of the two outermost intermediate shells, and their assembly to the top flange and bottom plate. Revised draft Design Drawings will be submitted to the NRC by July 17, 1998, to confirm these changes.

NRC Comment

Revise the acceptance criteria for the MPC closure weld volumetric examination to specify ASME Code, Section III, Subsection NB, Article NB-5332 rather than reference the Technical Specification.

Holtec Resolution

The MPC Design Drawings will be revised to specify the volumetric examination acceptance criteria for the MPC lid-to-shell weld to be in accordance with ASME Code Section III, Subsection NB, Article NB-5332. The confinement chapter, acceptance test and maintenance program chapter, and the Technical Specifications, shall also be revised to reflect the change in the weld acceptance criteria.

The revised draft Design Drawings will be submitted to the NRC by July 17, 1998 to confirm the change.

HOLTEC INTERNATIONAL

Holtec Center, 555 Lincoln Drive West, Marlton, NJ 08053

Telephone (609) 797-0900
Fax (609) 797-0909

NRC Comment

The NRC requested that the note specifying "No ASME Stamp Required" be deleted, as it is not required to be so stated.

Holtec Resolution

The appropriate Design Drawings will be revised to delete the statement "No ASME Stamp Required". The revised Design Drawings will be submitted to the NRC by July 17, 1998 to confirm this change.

NRC Comment

The NRC requested that the MPC lid handling lifting holes be deleted to prevent the possibility of a user attempting to lift a fully loaded MPC by these holes which are not designed for the full loaded MPC.

Holtec Resolution

The lid handling lifting holes were provided for lid handling only. To ensure an inappropriate lift using these holes does not occur, the Design Drawings will be revised to remove the four 5/8" lid lifting holes. All MPC lid and loaded MPC handling will be performed using the four centrally located holes. The operations and structural chapters will also be revised to reflect this change. The revised draft Design Drawings will be submitted to the NRC by July 17, 1998 to confirm this change.

NRC Comment

The optional weld detail for outer enclosure plate welding as shown on Design Drawing No. 1399, Sheet 2, is not an acceptable weld design.

Holtec Resolution

Design Drawing No. 1399, Sheet 2, will be revised to delete the optional enclosure plate weld detail. The revised draft Design Drawings will be submitted to the NRC by July 17, 1998, to confirm the change.

HOLTEC INTERNATIONAL

Holtec Center, 555 Lincoln Drive West, Marlton, NJ 08053

Telephone (609) 797-0900
Fax (609) 797-0909

NRC Comment

The NRC advised that the acceptable weld stress for the basket plate-to-plate welds should be evaluated at $0.42S_u$ rather than $0.72\ S_u$ based on the visual examination (VT) performed to assure weld acceptability.

Holtec Resolution

The basket weld design for each MPC type will be revised to reflect an allowable weld stress based on $0.42\ S_u$. The Design Drawings will be revised to reflect the new weld dimensions. The basket analyses in the structural chapter will also be revised to reflect the modified basket weld design.

The revised draft Design Drawings will be submitted to the NRC by July 17, 1998 to confirm this change.

NRC Comment

The NRC requested clarification on the dimensions of the outer cut-out on the bottom of the HI-STAR 100 overpack closure plate.

Holtec Resolution

The Design Drawings will be revised to clarify the dimensional requirements for the closure plate cut-out. The revised draft Design Drawings will be submitted to the NRC by July 17, 1998 to confirm this change.

HOLTEC INTERNATIONAL

Holtec Center, 555 Lincoln Drive West, Marlton, NJ 08053

Telephone (609) 797-0900
Fax (609) 797-0909

THERMAL

NRC Comment

The NRC requested clarification for the term "Cryogenic Steel" in Table 4.2.2.

Holtec Resolution

The term Cryogenic Steel refers to the type of materials utilized for the HI-STAR 100 overpack inner shell, top flange, bottom plate, and closure plate. The material for the inner shell is SA203-E and for the forged components SA350-LF3. Table 4.2.2 will be revised to add "(SA203-E and SA350-LF3)" after the term "Cryogenic Steel".

NRC Comment

The NRC requested clarification on the fuel cladding temperatures in Table 4.4.11 for the MPC-68. The table currently presents that the maximum temperature exceeds the design temperature.

Holtec Resolution

Holtec confirms that the design temperature value in Table 4.4.11 should be 749°F, not 720° F as reported. The maximum calculated fuel cladding temperature of 741°F is therefore below the correct design temperature value.

Holtec will revise Table 4.4.11 to reflect the correct fuel cladding design temperature, 749°F, for BWR fuels.

NRC Comment

The NRC requested clarification of whether the maximum fuel cladding temperatures reported in Tables 4.4.9 through 4.4.11 corresponded to the applicable peak temperature curve for the hottest rod plotted in Figures 4.4.20 through 4.4.22 for each canister/fuel type.

HOLTEC INTERNATIONAL

Holtec Center, 555 Lincoln Drive West, Marlton, NJ 08053

Telephone (609) 797-0900
Fax (609) 797-0909

Holtec Resolution

Holtec confirms that the peak temperatures reported in Figures 4.4.20 through 4.4.22 are the same as those listed in Tables 4.4.9 through 4.4.11, except that the temperatures on the figures are in °K, and the tables report the temperature in °F.

The other issues and comments raised by the NRC SFPO staff during the July 8, 1998 conference will be discussed and clarified in meetings scheduled for July 10 and July 21, 1998. As further issues are resolved, Holtec International will submit future comment resolution letters.

If you have any questions or comments on the information provided, please contact me.

Sincerely yours,

Bernard Gilligan
Project Manager, HI-STAR/HI-STORM Licensing
Holtec Document I.D.: 5014188

Approvals:

Gary T. Tjersland
Director of Licensing and Product Development

Dr. K.P. Singh, Ph.D., PE
President and CEO

HOLTEC INTERNATIONAL

Holtec Center, 555 Lincoln Drive West, Marlton, NJ 08053

Telephone (609) 797-0900
Fax (609) 797-0909

Concurrences

Criticality:		Dr. J. Wagner
Shielding:		Dr. E. Redmond
Structural		Dr. A. I. Soler
Thermal:	C Rosenbom for I Rampall	Dr. I. Rampall

Distribution

	Utility	Holtec Project
Mr. David Bland	Southern Nuclear Operating Company	71188
Mr. J. Nathan Leech	ComEd	50438
Mr. Bruce Patton	Pacific Gas and Electric Co.	71178
Dr. Max Delong	Private Fuel Storage, LLC	70651
Mr. Rodney Pickard	American Electric Power	70851
Mr. Ken Phy	New York Power Authority	80518
Mr. David Larkin	Washington Public Power Supply System	
Mr. Eric Meils	Wisconsin Electric Power Company	
Mr. Paul Plante	Maine Yankee Atomic Power Company	
Mr. Stan Miller	Vermont Yankee Corporation	

HOLTEC INTERNATIONAL

Holtec Center, 555 Lincoln Drive West, Marlton, NJ 08053

Telephone (609) 797-0900
Fax (609) 797-0909

July 13, 1998

Mr. Mark Delligatti
Senior Project Manager
Spent Fuel Licensing Section, SFPO, NMSS
United States Regulatory Commission
11555 Rockville Pike
Rockville, MD 20852

Subject: HI-STAR 100 Topical Safety Analysis Report, Revision 7
Comments Resolution

Reference: USNRC Docket No. 72-1008
Holtec Project 5014; Comment Resolution Letter No. 2

Dear Mr. Delligatti:

In accordance with the July 10, 1998 meetings at NRC headquarters on shielding and structural issues, Holtec International herein submits the resolutions to the NRC's comments which were agreed to during the discussions. The proposed resolutions will be incorporated into the next revision of the HI-STAR 100 Topical Safety Analysis Report (TSAR) following completion of the draft Safety Evaluation Report (SER). As appropriate, additional materials will be submitted to the NRC to support SER preparation activities as detailed below.

SHIELDING

NRC Comment

The NRC requested a copy of the SAS2H input files and that the files be incorporated in hard copy format in the shielding calculation package, Holtec Report HI-951322, HI-STAR 100 Shielding Design and Analysis for Transport and Storage.

Holtec Resolution

The SAS2H input files were supplied to the NRC on disk and hardcopy during the meeting held on July 10, 1998 and a hard copy of the input files will be added to the shielding calculation package, Holtec Report HI-951322. Upon completion of the comment resolution, the final shielding calculation package shall be submitted to the NRC.

HOLTEC INTERNATIONAL

Holtec Center, 555 Lincoln Drive West, Marlton, NJ 08053

Telephone (609) 797-0900
Fax (609) 797-0909

NRC Comment

The NRC requested that Tables 2.1.1 and 2.1.2 be revised or additional tables be provided to list each fuel assembly type within a fuel assembly class evaluated and authorized for storage in the HI-STAR 100 System. Also, the nomenclature used for the fuel assembly types should be consistent with the Energy Information Administration Service Report SR/CNEAF/96-01, "Spent Nuclear Fuel Discharges from U.S. Reactors".

Holtec Resolution

Tables 2.1.1 and 2.1.2 will be revised to list the fuel assembly class. Two additional tables, 2.1.12 and 2.1.13, will be provided in Section 2.1 of the TSAR to list the fuel types under each class specified. Tables 2.1.1, 2.1.2, 2.1.12, and 2.1.13 will use nomenclature consistent with the Energy Information Administration Service Report SR/CNEAF/96-01, "Spent Nuclear Fuel Discharges from U.S. Reactors". The revised and new tables will list each fuel assembly type evaluated and authorized for storage in the HI-STAR 100 System.

NRC Comment

The NRC requested that along with the total radiation source specified in Chapter 12 as the technical specification limit for gamma and neutron radiation sources, the corresponding spectrums should also be specified.

Holtec Resolution

Chapter 12 will be revised to include the corresponding spectrum for each radiation source specified as a technical specification limit. Chapter 5 will also be revised to conform with the revision to Chapter 12.

NRC Comment

The NRC requested that the discussion of the determination of the design basis fuel assembly type in Section 5.2 be expanded to provide additional information. The section should include an evaluation of each of the fuel assembly types, and the criteria used to evaluate each fuel type.

HOLTEC INTERNATIONAL

Holtec Center, 555 Lincoln Drive West, Marlton, NJ 08053

Telephone (609) 797-0900
Fax (609) 797-0909

Holtec Resolution

Section 5.2 will be revised to include a more in depth discussion of the criteria used to evaluate the different fuel assembly types and to incorporate the results of the evaluation for each fuel assembly type considered. The fuel assembly types evaluated will be consistent with the fuel assembly types listed in Tables 2.1.1, 2.1.2, 2.1.12, and 2.1.13.

NRC Comment

The NRC requested that Subsection 12.3.22 for shielding effectiveness testing be revised to add the requirement that the dose rate be equal to or less than 125 mrem/hr at the mid-point of the cask and less than or equal to 350 mrem/hr above and below the neutron shield.

Holtec Resolution

The Technical Specification in Subsection 12.3.22 will be revised to add the requirement that the dose rate be equal to or less than 125 mrem/hr at the mid-point of the cask, and less than or equal to 350 mrem/hr above and below the neutron shield.

NRC Comment

The NRC requested that the statistical error for the dose rate calculations reported in Chapter 5 be stated in Chapter 5.

Holtec Resolution

Chapter 5 will be revised to state the statistical error for the dose rate calculations.

NRC Comment

The NRC requested that the MPC lid dose rates specified in Subsection 12.3.7 be revised to correspond with the calculated dose rates provided in Chapter 5, and the shielding calculation package, Holtec Report HI-951322, HI-STAR 100 Shielding Design and Analysis for Transport and Storage.

Holtec Resolution

The MPC lid dose rates specified in Subsection 12.3.7 will be revised to correspond with the calculated dose rates provided in Chapter 5, and the shielding calculation package, HI-951322, HI-STAR 100 Shielding Design and Analysis for Transport and Storage.

HOLTEC INTERNATIONAL

Holtec Center, 555 Lincoln Drive West, Marlton, NJ 08053

Telephone (609) 797-0900
Fax (609) 797-0909

NRC Comment

The NRC requested that the neutron source calculation and its distribution should reflect the axial variation in burnup of the fuel assembly in lieu of being calculated based on the bundle average burnup and distributed based on the axial burnup profile.

Holtec Resolution

Chapter 5 will be revised to account for the effect of the axial variation in burnup on the total neutron source and its distribution.

NRC Comment

The NRC requested that the reference, [2.1.3], be revised to explicitly cite the location of the burnup profile in the referenced proceedings and that the reference, [2.1.4], be provided to the NRC.

Holtec Resolution

Reference [2.1.3] will be revised to explicitly cite the location of the burnup profile in the referenced proceedings, and reference [2.1.4] as provided in Enclosure A to this letter.

NRC Comment

The NRC requested that Subsection 5.2.4 be revised to include an example of a typical control component and the corresponding fuel assembly radiation source which is required to allow the storage of the fuel assembly with the control component.

Holtec Resolution

Subsection 5.2.4 will be revised to include an example of a typical control component and the corresponding fuel assembly radiation source which is required to allow the storage of the fuel assembly with the control component.

NRC Comment

The NRC requested that Subsection 5.4.4 be revised to provide additional discussion to support the reasoning for comparing the MOX and stainless steel clad fuel sources with the design basis fuel assembly sources based on a per inch basis (i.e., source per inch).

HOLTEC INTERNATIONAL

Holtec Center, 555 Lincoln Drive West, Marlton, NJ 08053

Telephone (609) 797-0900
Fax (609) 797-0909

Holtec Resolution

Additional information will be provided in Subsections 5.4.4 and 5.4.5 to document the reasoning for comparing the MOX and stainless steel clad fuel radiation sources with the design basis fuel assembly source based on a per inch basis (i.e., source per inch). As the MOX and stainless steel clad fuel assemblies are shorter than the design basis fuel assembly (zircaloy clad UO_2 fuel), the total radiation source for the fuel assembly may be less than the design basis fuel assembly, but the radiation source per inch may be higher - potentially causing the mid-point dose of the cask to be higher than calculated. By evaluating the fuel assembly on a source-per-inch basis the evaluation ensures that the mid-point dose rate of the cask while storing MOX or stainless steel fuel clad assemblies will not be higher than that calculated with the design basis fuel (zircaloy clad UO_2 fuel).

STRUCTURAL

NRC Comment

The NRC requested that the welds for the two outermost intermediate shells be inspected by dye penetrant (PT) or magnetic particle (MT) examination methods in addition to the currently specified visual examination (VT).

Holtec Resolution

In accordance with Holtec's Comment Resolution Letter No. 1, the two outermost intermediate shells will be fabricated and assembled to the HI-STAR 100 overpack utilizing full penetration welds. Currently, the Design Drawings specify VT for all welds, and additionally, PT or MT on the intermediate shell welds to the top flange and bottom plate forgings. The Design Drawings will be revised to specify performance of PT examinations on the remaining circumferential and longitudinal welds of the two outermost intermediate shells (Item Nos. 15 and 16 on Design Drawing No 1397, Sheet 1). The draft revised Design Drawings will be submitted to the NRC by July 17, 1998, to confirm these changes.

NRC Comment

The NRC requested clarification on the methods utilized in the TSAR to determine fabrication stresses in the HI-STAR 100 overpack weldment. Requested method be based on 1/4 symmetry rather than 1/2 symmetry as utilized in Appendix 3.L of the TSAR.

HOLTEC INTERNATIONAL

Holtec Center, 555 Lincoln Drive West, Marlton, NJ 08053

Telephone (609) 797-0900
Fax (609) 797-0909

Holtec Resolution

Following discussion by Dr. A. Soler of Holtec on the assumptions and finite element analysis methodology utilized in Appendix 3.L to calculate the residual fabrication stresses in each of the shells, the NRC advised that the method currently utilized in the TSAR by Holtec is acceptable to the NRC staff. No further action is required.

NRC Comment

The NRC advised of concerns regarding the weld design and analyses of the Damaged Fuel Container (DFC) reported in Appendix 3.B of the TSAR.

Holtec Resolution

Holtec advised the NRC staff that the weld design and analyses for the DFC in Appendix 3.B will be revised to utilize appropriate weld efficiency factors. The revised analyses will also incorporate a change in the acceptance criteria from the currently specified NUREG-0612 criteria to an acceptance criteria in accordance with Regulatory Guide 3.61 of lifting of 3X on yield and 5X on ultimate of the DFC, as the load to be lifted is not a critical lift as defined in NUREG-0612.

The revised Appendix 3.B analyses will be incorporated into the TSAR at the completion of the draft SER.

NRC Comment

The NRC requested that Holtec perform local buckling analyses for the MPC fuel baskets at 60g's in accordance with NUREG-6322 and show that the required safety factor is met.

Holtec Resolution

The current MPC fuel basket analyses in Appendices 3.N, 3.P, and 3.R of the TSAR for the three fuel basket designs includes a buckling analyses performed in accordance with the ASME Code, Section III, Subsection NG. To assist in the NRC's review, these appendices will be revised to provide an improved discussion on the description of the current global buckling analysis models, assumptions, and results. Additionally, a local buckling analysis per NUREG/CR-6322 will be performed and incorporated into the TSAR to show that the required safety factors to local basket buckling are met for the maximum design deceleration (60g's).

HOLTEC INTERNATIONAL

Holtec Center, 555 Lincoln Drive West, Marlton, NJ 08053

Telephone (609) 797-0900
Fax (609) 797-0909

The revised buckling analyses will be submitted to the NRC's staff for review by July 22, 1998 as draft TSAR Revision 8 pages to assist the NRC in final HI-STAR 100 SER preparation activities.

NRC Comment

The NRC advised of concerns regarding the safety factors for the engagement of the Lifting Trunnions to the HI-STAR 100 top flange forging. A minimum safety factor of six on yield is required to assure the requirements of NUREG-0612 are met.

Holtec Resolution

Holtec advised the NRC staff that the lifting trunnion-to-top flange forging engagement was designed to meet Reg. Guide 3.61 criteria of 3X the lifted load compared to yield, including an appropriate dynamic load factor. Based on this criteria, the current lifting trunnions have safety factors of >5X on bearing stress and >3.3X on thread shear. However, to resolve NRC concerns, Holtec will revise the design of the lifting trunnions to increase the length of trunnion thread engagement to the top flange forging, and will increase the threaded diameter of the trunnion (e.g., the change will not affect the external handling diameter of the lifting trunnion). The revised trunnion design will then be analyzed to assure that a minimum safety factor of 6 is achieved for both bearing stress and thread shear. In the analyses, the appropriate code will be utilized (e.g., ASME Code, Section III, Subsection NF). A justifiable lifting point will be utilized in the analysis.

The revised lifting trunnion design will be incorporated into the Design Drawings, and the draft revised Design Drawings will be submitted to the NRC by July 17, 1998. Additionally, the revised lifting trunnion load analyses will be submitted to the NRC as draft TSAR Revision 8 pages by July 22, 1998 to close-out this item and facilitate draft SER preparation.

NRC Comment

The NRC staff advised Holtec that Holtec Report No. HI-971779, "Benchmarking of the Holtec LS-DYNA3D Model for Cask Drop Events," September 1997, has been generally accepted by the staff for the evaluation of drop and tip-over events. The NRC staff will accept the tip-over for the HI-STAR 100 cask if a rigid body bounding case is evaluated and a filtering frequency of 350 Hz is utilized, as in the Lawrence Livermore National Laboratory (LLNL) reports. If the deceleration value exceeds the current design criteria for the HI-STAR 100 of 60g's, the higher deceleration value will be required to be evaluated in the fuel basket analyses.

HOLTEC INTERNATIONAL

Holtec Center, 555 Lincoln Drive West, Marlton, NJ 08053

Telephone (609) 797-0900
Fax (609) 797-0909

Holtec Response

Holtec advised the staff that the appropriate analyses of the HI-STAR 100 tip-over event will be performed and the decelerations will be determined using a cut-off filtering frequency of 350 Hz as used by LLNL.

Following conclusion of the meeting, Holtec identified that the requested analysis is already included in the TSAR in Appendix 3.A, Section 3.A.7, and the results are reported in Table 3.A.3 as the bounding case. These results were determined based on a filtering frequency of 350 Hz. The maximum deceleration reported for the top of the cask is 61.84 g's and for the top of the fuel basket is 56.0 g's. Therefore, the current TSAR includes the requested analyses, and the resulting maximum deceleration for the top of the basket is below the current design criteria of 60 g's utilized in the basket and cask structural analyses. Appendix 3.A shall be revised to delete the tip-over analysis performed with a filter frequency below 350 Hz.

It is requested that the NRC staff review the above proposed resolutions and advise Holtec International of any comments or questions. As new issues are identified by the NRC staff, Holtec International personnel will be available to meet or discuss the remaining issues to assure the current SER schedule is maintained.

Sincerely yours,

Bernard Gilligan
Project Manager, HI-STAR/HI-STORM Licensing
Document I.D.: 5014190
Enclosure A: Commonwealth Edison Company, Letter No. NFS-BND-95-083, Chicago, Illinois

HOLTEC INTERNATIONAL

Holtec Center, 555 Lincoln Drive West, Marlton, NJ 08053

Telephone (609) 797-0900
Fax (609) 797-0909

Approvals:

Gary T. Tjersland
Director of Licensing and Product Development

K.P. Singh, Ph.D., PE
President and CEO

Concurrences:

Shielding: John C. Wagner for E. Redmond — Dr. Everett Redmond

Structural: Gary T. Tjersland for — Dr. A.I. Soler

Distribution:

	Utility	Holtec Project
Mr. David Bland	Southern Nuclear Operating Company	71188
Mr. J. Nathan Leech	ComEd	50438
Mr. Bruce Patton	Pacific Gas & Electric Co.	71178
Dr. Max DeLong	Private Fuel Storage, LLC	70651
Mr. Rodney Pickard	American Electric Power	70851
Mr. Ken Phy	New York Power Authority	80518
Mr. David Larkin	Washington Public Power Supply System	
Mr. Eric Meils	Wisconsin Electric Power Company	
Mr. Paul Plante	Maine Yankee Atomic Power Company	
Mr. Stan Miller	Vermont Yankee Corporation	

HOLTEC INTERNATIONAL

Holtec Center, 555 Lincoln Drive West, Marlton, NJ 08053

Telephone (609) 797-0900
Fax (609) 797-0909

SENT BY FedEx

July 16, 1998

Mr. Mark Delligatti
Senior Project Manager
Spent Fuel Licensing Section, SFPO, NMSS
United States Nuclear Regulatory Commission
11555 Rockville Pike
Rockville, MD 20852

Subject: 1. USNRC Docket No. 72-1008
HI-STAR 100 Topical Safety Analysis Report, Revision 7
Comment Resolution Letter No. 3

References: 1. Holtec International Letter, B. Gilligan to M. Delligatti, USNRC, dated July 9, 1998

2. Holtec International Letter, B. Gilligan to M. Delligatti, USNRC, dated July 13, 1998

Dear Mr. Delligatti:

In accordance with the previous commitments to revise the HI-STAR 100 Design Drawings to incorporate NRC's structural comments, enclosed for your review are three (3) sets of the revised Design Drawings. The Design Drawings were revised to incorporate the specific changes as identified in the Reference 1 and 2 comment resolution letters. In addition, the drawings have also been revised to incorporate minor changes to facilitate HI-STAR 100 fabrication resulting from the continuing HI-STAR 100 Prototype Fabrication Project.

The structural analyses for the revised trunnion engagement design and the revised basket plate weld dimensions will be submitted for NRC review by July 22, 1998.

The enclosed revised Design Drawings will be incorporated into the subject HI-STAR 100 TSAR following issuance of the draft SER.

HOLTEC INTERNATIONAL

Holtec Center, 555 Lincoln Drive West, Marlton, NJ 08053

Telephone (609) 797-0900
Fax (609) 797-0909

The enclosed Design Drawings contain information which is commercially sensitive to Holtec International and is treated by us with strict confidentiality. This information is of the type described in 10CFR2.790(b)(4). The enclosed affidavit sets forth the basis for which the information is required to be withheld by the NRC from further disclosure, consistent with the considerations and pursuant to the provisions of 10CFR2.790(b)(1). It is therefore requested that the proprietary enclosures be withheld from disclosure in accordance with regulatory review requirements.

If you have any comments or questions, please do not hesitate to contact me.

Sincerely yours,

Gary T. Tjersland
Director of Licensing and Product Development

Document I.D.: 5014193

Approval:

K.P. Singh, Ph.D., PE
President and CEO

Enclosures:

Revised HI-STAR 100 Design Drawings, Three Sets, consisting of the following:

- 5014-1395 Sht. 1/4 HI-STAR 100 MPC-24 Construction, Rev. 9
- 5014-1395 Sht. 2/4 HI-STAR 100 MPC-24 Construction, Rev. 9
- 5014-1395 Sht. 3/4 HI-STAR 100 MPC-24 Construction, Rev. 9
- 5014-1396 Sht. 1/6 HI-STAR 100 MPC-24 Construction, Rev. 9
- 5014-1396 Sht. 2/6 HI-STAR 100 MPC-24 Construction, Rev. 9
- 5014-1396 Sht. 3/6 HI-STAR 100 MPC-24 Construction, Rev. 9

HOLTEC INTERNATIONAL

Holtec Center, 555 Lincoln Drive West, Marlton, NJ 08053

Telephone (609) 797-0900
Fax (609) 797-0909

• 5014-1397 Sht. 1/7	Cross Sectional View of HI-STAR 100 Overpack, Rev. 12
• 5014-1397 Sht. 2/7	Detail of Top Flange & Bottom Plate of HI-STAR 100 Overpack, Rev. 10
• 5014-1397 Sht. 3/7	Detail of Bolt Hole & Bolt of HI-STAR 100 Overpack, Rev. 10
• 5014-1397 Sht. 4/7	Detail of Closure Plate Test Port and Name Plate Detail of HI-STAR 100 Overpack, Rev. 11
• 5014-1397 Sht. 5/7	Detail of Lifting Trunnion & Locking Pad of HI-STAR 100 Overpack, Rev. 8
• 5014-1398 Sht 1/3	HI-STAR 100 Overpack Orientation, Rev. 12
• 5014-1399 Sht. 1/3	Section "G" - "G" of HI-STAR 100 Overpack, Rev. 8
• 5014-1399 Sht. 2/3	Section "X"-"X" & View "Y" of HI-STAR 100 Overpack, Rev. 8
• 5014-1399 Sht. 3/3	Detail of Trunnion Pocket Forging of HI-STAR 100 Overpack, Rev. 9
• 5014-1401 Sht. 1/4	HI-STAR 100 MPC-68 Construction, Rev. 10
• 5014-1401 Sht. 2/4	HI-STAR 100 MPC-68 Construction, Rev. 8
• 5014-1401 Sht. 3/4	HI-STAR 100 MPC-68 Construction, Rev. 9
• 5014-1402 Sht. 1/6	HI-STAR 100 MPC-68 Construction, Rev. 10
• 5014-1402 Sht. 2/6	HI-STAR 100 MPC-68 Construction, Rev. 10
• 5014-1402 Sht. 3/6	HI-STAR 100 MPC-68 Construction, Rev. 9
• 5014-1763 Sht 1/1	HI-STAR 100 Assembly, Rev. 3
• BM-1476 Sht 1/2	Bills-of-Material for HI-STAR 100 Overpack, Rev. 11
• BM-1476 Sht 2/2	Bills-of-Material for HI-STAR 10 Overpack, Rev. 11
• BM-1478 Sht 2/2	Bills-of-Material for 24-Assembly HI-STAR 100 PWR MPC, Rev. 10
• BM-1479 Sht. 2/2	Bills-of-Material for 68-Assembly HI-STAR 100 BWR MPC, Rev. 10

HOLTEC INTERNATIONAL

Holtec Center, 555 Lincoln Drive West, Marlton, NJ 08053

Telephone (609) 797-0900
Fax (609) 797-0909

Distribution (Letter Only):

	Utility	Holtec Project
Mr. David Bland	Southern Nuclear Operating Company	71188
Mr. J. Nathan Leech	ComEd	50438
Mr. Bruce Patton	Pacific Gas & Electric Co.	71178
Dr. Max DeLong	Private Fuel Storage, LLC	70651
Mr. Rodney Pickard	American Electric Power	70851
Mr. Ken Phy	New York Power Authority	80518
Mr. David Larkin	Washington Public Power Supply System	
Mr. Eric Meils	Wisconsin Electric Power Company	
Mr. Paul Plante	Maine Yankee Atomic Power Company	
Mr. Stan Miller	Vermont Yankee Corporation	
Mr. Jim Clark	SONGS	

HOLTEC INTERNATIONAL

Holtec Center, 555 Lincoln Drive West, Marlton, NJ 08053

Telephone (609) 797-0900
Fax (609) 797-0909

BY FAX AND FEDEX

July 22, 1998

Mr. Mark Delligatti
Senior Project Manager
Spent Fuel Licensing Section, SFPO, NMSS
United States Nuclear Regulatory Commission
11555 Rockville Pike
Rockville, MD 20852

Subject: USNRC Docket No. 72-1008
HI-STAR 100 Topical Safety Analysis Report, Revision 7
Comment Resolution Letter No. 4

Reference: Holtec Project 5014

Dear Mr. Delligatti:

In accordance with the discussions at the July 21, 1998 meeting at the NRC headquarters on shielding, criticality, structural, and confinement issues, Holtec International herein submits this resolution to the NRC's comments which were agreed to during the discussions. The proposed resolutions will be incorporated into the next revision of the HI-STAR 100 TSAR following completion of the draft SER. As appropriate, additional material will be forwarded to the NRC staff to support SER preparation activities as detailed below.

SHIELDING

NRC Comment

The NRC staff requested that the Technical Specifications for fuel selection be based on burnup and minimum cooling time curves or limits, rather than by reference to source terms. The use of source terms and enrichment should be used only in the bases of the Technical Specifications to justify the burnup and cooling times.

The NRC also requested that in developing the burnup and cooling time limits, that Holtec address conservative (low) enrichment levels for each of the fuel types (PWR and BWR) for the burnup ranges considered. The final curve also needs to include the effect of control components in the stored fuel assemblies.

HOLTEC INTERNATIONAL

Holtec Center, 555 Lincoln Drive West, Marlton, NJ 08053

Telephone (609) 797-0900
Fax (609) 797-0909

Holtec Response

Holtec will prepare final burnup and cooling times curves (and source terms in Chapter 5) using conservatively selected enrichment levels to show that the shield analyses in Chapter 5 are conservative. The final enrichment levels will be identified and justified in the revised analyses. The revised analyses will also confirm the bounding fuel assembly by comparing the source terms of the various classes of PWR assemblies (e.g., 15x15, 16x16, 17x17) and BWR assemblies (e.g., 7x7, 8x8, 9x9, etc.). The results of the revised shielding/source term analyses will be evaluated for impacts on the occupational and off-site dose assessments in Chapter 10 of the TSAR.

The revised source term and dose analyses will be submitted to the NRC (including revised SAS2H and ORIGEN-S input and output files) by end of business day on July 27, 1998.

CRITICALITY

NRC Comment

The NRC requested that Holtec revise the Technical Specifications to be explicitly consistent with the fuel parameters listed in Table 6.2.1.

Holtec Response

Due to the large number of minor variations in fuel assembly dimensions, the use of explicit dimensions in the Technical Specifications could severely limit the applicability of the HI-STAR 100 System. To resolve this limitation, Holtec committed to preparing bounding criticality analyses for each class of fuel assembly for both fuel types (PWR and BWR). The bounding criticality analyses will justify more general Technical Specifications for fuel parameters.

For each array size (e.g., 17x17, 16x16, etc.) the fuel assemblies will be subdivided into a number of classes, where a class will be defined in terms of pitch and number and locations of guide tubes (PWR) or water rods (BWR). For each assembly class, calculations will be performed for all of the dimensional variations for which we have data. These calculations will demonstrate that the maximum reactivity corresponds to:

- maximum active fuel length
- maximum fuel pellet O.D.

HOLTEC INTERNATIONAL

Holtec Center, 555 Lincoln Drive West, Marlton, NJ 08053

Telephone (609) 797-0900
Fax (609) 797-0909

- minimum cladding O.D.
- maximum cladding I.D.
- minimum guide tube/water rod thickness
- maximum channel thickness (for BWR assemblies only)

Therefore, an artificial bounding assembly will be defined based on the above characteristics and a calculation for the bounding assembly will be performed to demonstrate compliance with the regulatory requirement of keff < 0.95.

As a result of this analysis, the Technical Specifications will define acceptability in terms of these bounding parameters. The following table provides an example of the proposed Technical Specifications for one PWR assembly class (all dimensions are in inches).

Array size	17x17
Number of fuel rods	264
Number of guide tubes	25
Fuel rod pitch	0.496
Maximum pellet O.D.	0.3088
Minimum cladding O.D.	0.360
Maximum cladding I.D.	0.3150
Minimum guide tube/water rod thickness	0.0160
Cladding material	Zr
Maximum active fuel length	150
Maximum enrichment (wt% U-235)	4.0

Holtec will submit all revised criticality analyses results, and the list of fuel assemblies (and parameters) analyzed by end of business day on July 27, 1998.

HOLTEC INTERNATIONAL

Holtec Center, 555 Lincoln Drive West, Marlton, NJ 08053

Telephone (609) 797-0900
Fax (609) 797-0909

NRC Comment

The NRC requested that the Technical Specification enrichment limit for the 6x6 Dresden 1 BWR assembly be limited to the enrichment level analyzed in the TSAR.

Holtec Response

Holtec will revise the Technical Specifications to limit the 6x6 Dresden Unit 1 enrichment level to the value analyzed. In a clarification to a previous comment resolution regarding B-10 loadings, the B-10 loading for the MPC-68F will be listed as 0.0089 g/cm^2 (limited to Dresden Unit 1 and Humboldt Bay damaged fuel and fuel debris). For all other MPC-68 canisters, the B-10 loading will be set at 0.0372 g/cm^2 as currently shown on the Design Drawings and Bill-of-Material. As previously committed, the curve of minimum B-10 loading for BWR fuel assembly contents will be deleted from the TSAR.

STRUCTURAL

NRC Comment

The NRC requested the location in the TSAR of the internal MPC lifting lug (used for handling an empty MPC) load analyses.

Holtec Response

The calculation for the MPC internal lifting lug analyses is attached for your information. The analyses will be incorporated in Chapter 3 of the TSAR upon completion of the SER.

CONFINEMENT

Holtec Resolution

To clarify storage confinement requirements for damaged fuel assemblies (e.g., fuel assemblies with defects no greater than pinhole leaks or hairline cracks), and fuel debris (e.g., loose fuel pellets, and ruptured and severed rods), Holtec will revise the definitions in the TSAR. There will be no changes in the confinement analyses (Chapter 7) as a result of this change.

HOLTEC INTERNATIONAL

Holtec Center, 555 Lincoln Drive West, Marlton, NJ 08053

Telephone (609) 797-0900
Fax (609) 797-0909

To close out previous structural comments, the following revised analyses and appendices are submitted for NRC review and information:

- Section 3.4: Modification to pages 3.4-5, 3.4-8, and 3.4-24. Complete section reprinted due to page number change.
- Appendix 3A: Tipover Analyses (proprietary): revised to clarify bounding analysis with filtering at 350 Hz.
- Appendix 3.M: Revised basket weld analyses to reflect the revised weld stress allowable and to list the minimum weld size for the Design Drawings.
- Appendix 3.D: Revised lifting trunnion load analyses to meet NUREG-0612 safety factors of 6 on yield.
- Appendix 3.K: Revised MPC lid lifting analysis to reflect deletion of MPC lid lifting holes
- Appendix 3.B: Damaged Fuel Container analyses revised to analyze shear stress per NRC comment and to reflect revised lifting safety factors of 3 and 5. .
- Calculations supporting Revision 8: Revised basket buckling analyses and basket plate weld size calculations.

The enclosed Appendix 3.A contains information which is commercially sensitive to Holtec International and is treated by us with strict confidentiality. This information is of the type described in 10CFR2.790(b)(4). The enclosed affidavit sets forth the basis for which the information is required to be withheld by the NRC from further disclosure, consistent with the considerations and pursuant to the provisions of 10CFR2.790 (b)(1). It is therefore requested that the proprietary enclosure be withheld from disclosure in accordance with regulatory review requirements.

HOLTEC INTERNATIONAL

Holtec Center, 555 Lincoln Drive West, Marlton, NJ 08053

Telephone (609) 797-0900
Fax (609) 797-0909

If you have any comments or questions, please contact me.

Sincerely yours,

Bernard Gilligan
Project Manager, HI-STAR/HI-STORM Licensing

Document I.D.: 5014196

Approvals:

Gary T. Tjersland
Director of Licensing and Product Development

K.P. Singh, Ph.D., PE
President and CEO

Concurrences

Dr. Everett Redmond (Shielding Analysis):

Dr. John Wagner (Criticality Analyses):

Dr. Alan Soler (Structural Analysis):

Ms. Joy Russell (Confinement Analysis):

Distribution (Letter Only):

	Utility	Holtec Project
Mr. David Bland	Southern Nuclear Operating Company	71188
Mr. J. Nathan Leech	ComEd	50438
Mr. Bruce Patton	Pacific Gas & Electric Co.	71178
Dr. Max DeLong	Private Fuel Storage, LLC	70651
Mr. Rodney Pickard	American Electric Power	70851
Mr. Ken Phy	New York Power Authority	80518
Mr. David Larkin	Washington Public Power Supply System	
Mr. Eric Meils	Wisconsin Electric Power Company	
Mr. Paul Plante	Maine Yankee Atomic Power Company	
Mr. Stan Miller	Vermont Yankee Corporation	
Mr. Jim Clark	SONGS	

HOLTEC INTERNATIONAL

Holtec Center, 555 Lincoln Drive West, Marlton, NJ 08053

Telephone (609) 797-0900
Fax (609) 797-0909

BY FAX AND HAND DELIVERY

July 27, 1998

Mr. Mark Delligatti
Senior Project Manager
Spent Fuel Licensing Section, SFPO, NMSS
United States Nuclear Regulatory Commission
11555 Rockville Pike
Rockville, MD 20852

Subject: USNRC Docket No. 72-1008
HI-STAR 100 Topical Safety Analysis Report, Revision 7
Comment Resolution Letter No. 5

Reference: Holtec Project 5014

Dear Mr. Delligatti:

In accordance with the Holtec/NRC telephone conference call of July 22, 1998, and Holtec's Comment Resolution Letter No. 4 of July 22, 1998, enclosed are the following revised analyses:

- Proposed revisions to TSAR Chapter 6 providing revised criticality results for all listed PWR and BWR fuel assemblies defined by assembly classes.

- Proposed revisions to the TSAR Chapter 5 providing revised shielding source terms and dose rates based on utilizing conservatively low fuel enrichment levels. Also included are revised SAS2H and ORIGEN-S input files for the source term analysis.

- Draft Appendix 12.A containing the revised Limiting Conditions of Operation and Technical Specifications for the HI-STAR 100 System. The draft Appendix 12.A replaces Section 12.3 of the current TSAR. These Technical Specifications have been prepared in the format of the Integrated Technical Specifications.

HOLTEC INTERNATIONAL

Holtec Center, 555 Lincoln Drive West, Marlton, NJ 08053

Telephone (609) 797-0900
Fax (609) 797-0909

Draft Revision 8 of Chapters 5, 6, and 12 will be submitted incorporating the enclosed materials by August 3, 1998, and will be incorporated into the TSAR by August 21, 1998.

In response to the NRC's request for Additional Information (RAI) on Holtec Report No. HI-971779, "Benchmarking of the Holtec LS-DYNA3D Model for Cask Drop Events", transmitted on July 24, 1998, Attachment 1 provides Holtec's detailed responses. As a result of RAIs, a minor revision to the benchmark report was completed and is provided as Attachment 2.

The attached revised pages to Holtec Report HI-971779 contain information which is commercially sensitive to Holtec International and is treated by us with strict confidentiality. This information is of the type described in 10CFR2.790(b)(4). The enclosed affidavit sets forth the basis for which the information is required to be withheld by the NRC from further disclosure, consistent with the considerations and pursuant to the provisions of 10CFR2.790(b)(1). It is, therefore, requested that the proprietary attachment be withheld from disclosure in accordance with regulatory review requirements.

If you have any comments or questions, please do not hesitate to contact me.

Sincerely yours,

Bernard Gilligan
Project Manager, HI-STAR/HI-STORM Licensing

Document I.D.: 5014198

Approvals:

Gary T. Tjersland
Director of Licensing and Product Development

HOLTEC INTERNATIONAL

Holtec Center, 555 Lincoln Drive West, Marlton, NJ 08053

Telephone (609) 797-0900
Fax (609) 797-0909

Concurrences

Dr. Everett Redmond (Shielding Analysis): _____

Dr. John Wagner (Criticality Analyses): _____

Dr. Alan Soler (Structural Analysis): _____

Mr. B. Gutherman(Technical Specifications) _____

Enclosures:

1. Revised TSAR Chapter 6 pages and tables (four copies)
2. Revised TSAR Chapter 5 pages and tables. (four copies)
3. Draft Appendix 12.A - Technical Specifications (four copies)
4. Original Affidavit per 10CFR2.790

Attachments:

1. Holtec Responses to NRC RAI, dated July 24, 1998 (four copies)
2. Revised pages to Holtec Report No. HI-971779 (three copies)

Distribution (Letter Only):

	Utility	Holtec Project
Mr. David Bland	Southern Nuclear Operating Company	71188
Mr. J. Nathan Leech	ComEd	50438
Mr. Bruce Patton	Pacific Gas & Electric Co.	71178
Dr. Max DeLong	Private Fuel Storage, LLC	70651
Mr. Rodney Pickard	American Electric Power	70851
Mr. Ken Phy	New York Power Authority	80518
Mr. David Larkin	Washington Public Power Supply System	
Mr. Eric Meils	Wisconsin Electric Power Company	
Mr. Paul Plante	Maine Yankee Atomic Power Company	
Mr. Stan Miller	Vermont Yankee Corporation	
Mr. Jim Clark	SONGS	
Mr. Ray Kellar	ANO	

HOLTEC INTERNATIONAL

Holtec Center, 555 Lincoln Drive West, Marlton, NJ 08053

Telephone (609) 797-0900
Fax (609) 797-0909

BY FAX AND FEDEX

July 29, 1998

Mr. Mark Delligatti
Senior Project Manager
Spent Fuel Licensing Section, SFPO, NMSS
United States Nuclear Regulatory Commission
11555 Rockville Pike
Rockville, MD 20852

Subject: USNRC Docket No. 72-1008
HI-STAR 100 Topical Safety Analysis Report, Revision 7
Comment Resolution Letter No. 6

Reference: Holtec Project 5014

Dear Mr. Delligatti:

As a result of revisions made in Chapter 5 to the source terms and the subsequent change in dose rates, Chapters 7, Confinement, and 10, Radiation Protection, were revised. These two chapters are provided herein as Enclosure 1 and 2, respectively, to assist the NRC in the completion of the draft SER. The change in the bounding fuel assembly source term required the calculations summarized in Chapter 7 to be revised. The revision resulted in an increase in the dose at the controlled area boundary under accident conditions, but as shown in the chapter the dose is well below the regulatory limit. The collective dose reported in Chapter 10 changes slightly due to the revised distribution of the neutron radiation and the revised source terms. Chapters 7 and 10 are provided as proposed Revision 8 chapters. These chapters will be provided with Revision 8 to the HI-STAR TSAR to be submitted to the NRC by August 21, 1998.

Enclosure 3 provides the final page changes to the Technical Specifications submitted by the Holtec Comment Resolution Letter No. 5, dated July 27, 1998. Enclosure 3 also includes a draft Certificate of Compliance for your review. To facilitate the NRC's review a disk which contains the Technical Specifications with the page changes incorporated and the draft Certificate of Compliance is provided as requested.

HOLTEC INTERNATIONAL

Holtec Center, 555 Lincoln Drive West, Marlton, NJ 08053

Telephone (609) 797-0900
Fax (609) 797-0909

If you have any comments or questions, please contact me.

Sincerely yours,

Bernard Gilligan
Project Manager, HI-STAR/HI-STORM Licensing

Document I.D.: 5014200

Approvals:

Gary T. Tjersland
Director of Licensing and Product Development

Concurrences

Dr. Everett Redmond (Shielding Analysis):

Ms. Joy Russell (Confinement Analyses):

Mr. B. Gutherman (Technical Specifications):

Distribution (Letter Only):

	Utility	Holtec Project
Mr. David Bland	Southern Nuclear Operating Company	71188
Mr. J. Nathan Leech	ComEd	50438
Mr. Bruce Patton	Pacific Gas & Electric Co.	71178
Dr. Max DeLong	Private Fuel Storage, LLC	70651
Mr. Rodney Pickard	American Electric Power	70851
Mr. Ken Phy	New York Power Authority	80518
Mr. David Larkin	Washington Public Power Supply System	
Mr. Eric Meils	Wisconsin Electric Power Company	
Mr. Paul Plante	Maine Yankee Atomic Power Company	
Mr. Stan Miller	Vermont Yankee Corporation	
Mr. Jim Clark	SONGS	

HOLTEC INTERNATIONAL

Holtec Center, 555 Lincoln Drive West, Marlton, NJ 08053

Telephone (609) 797-0900
Fax (609) 797-0909

BY FAX AND FEDEX

July 30, 1998

Mr. Mark S. Delligatti
Senior Project Manager
Spent Fuel Licensing Section, SFPO, NMSS
United States Nuclear Regulatory Commission
11555 Rockville Pike
Rockville, MD 20852

Subject: USNRC Docket No. 72-1008
HI-STAR 100 Topical Safety Analysis Report, Revision 7
Comment Resolution Letter No. 7

Reference: Holtec Project 5014

Dear Mr. Delligatti:

In accordance with the discussions on July 28, 1998 with the SFPO staff on structural issues, Holtec International herein submits this information in response to the NRC's comments. The resolution of these issues will be incorporated into the next revision of the HI-STAR 100 TSAR on August 21, 1998. As required, additional material is enclosed to support SER preparation activities by the NRC staff.

STRUCTURAL

NRC Comment

The NRC staff requested that Holtec provide analysis of the overpack structure at an ambient temperature of –40°F with a loaded MPC. The analysis should consider the most critical thermal gradients in the overpack. Show that the stresses in the overpack are within allowable values and that the closure will not be breached.

Holtec Response

Subsection 3.4.5 discusses the effects on the HI-STAR 100 System as a result of the cold condition (i.e., an ambient temperature of –40°F). The subsection explains that the thermal gradient for the hot ambient (80°F) with maximum fuel decay heat load is the same as the gradient for the cold ambient (-40°F) with maximum decay heat load. Additionally, as the ambient temperature decreases from 80°F to -40°F, the absolute temperature of the helium contained in the cask decreases. In accordance with the Ideal Gas Law, a decrease in the absolute temperature of the helium will produce a proportional reduction in the internal pressure. Since

the stresses under normal storage conditions arise principally from pressure and thermal gradients, it follows that the stress field for the overpack under -40°F ambient would be bounded by the stress field for the overpack under 80°F ambient.

Under the 80°F ambient temperature and the maximum fuel decay heat load, the thermal analysis in Chapter 4 reports the resultant component temperatures. These temperatures were used in Appendices 3.U and 3.W to demonstrate that there was no restraint of free thermal expansion for the MPC-24 and MPC-68 in the HI-STAR overpack. Under the postulated cold ambient temperature of -40°F, the component temperatures will decrease by 80°F minus -40°F or a ΔT of 120°F. Thermal expansion is calculated from the product of the coefficient of thermal expansion, α, and the change in temperature, ΔT. Since the changes in temperature in each component would decrease by 120°F, the resultant thermal expansion would also decrease. This is coupled with the fact that the coefficient of thermal expansion for carbon steel and stainless steel decreases as the temperatures are decreased. Therefore, if the analyses performed in Appendicies 3.U and 3.W demonstrate that there is no restraint of free thermal expansion, analysis performed at component temperatures 120°F less (to account for the cold ambient temperature, -40°F) would also show that there is no constraint of free thermal expansion. The operational clearances predicted in Appendices 3.U and 3.W are a conservative lower bound on the clearances with the ambient temperature corresponding to extreme cold conditions. This discussion has been added to Subsection 3.4.5 which is provided as Attachment 1 to this letter for your information.

To demonstrate that the cold ambient temperature, -40°F, does not affect the closure bolt sealing a new appendix (Appendix 3.AE) will be added to Revision 8 of the HI-STAR TSAR. Appendix 3.AE follows the guidance of NUREG-6007 and is provided as Attachment 2 to this letter. The appendix shows that the closure bolt load decreases by 3.5%. This small decrease in the bolt load will have no effect on the seal and the retention of the helium within the overpack cavity.

NRC Comment

The NRC requested that Holtec provide analysis of the overpack during the fire accident condition. Show that the overpack will not leak helium gas during and after the fire accident.

Holtec Response

Load Case 02 in Table 3.1.5 investigates the effect of fire accident temperatures (T*) and accident internal pressure (P_I*) from a structural point of view.

The status of the joint seal between the overpack closure plate and top flange is acertained by "compression springs" which simulate the O-ring gaskets. The seal is verified by checking the status of these spring elements. If contact between the closure plate and top flange is maintained (indicated by a compressive load in the "compression spring"), then the integrity of the seal is determined to have been maintained. The overpack closure bolts are modeled with beam elements (BEAM4). The top of the beam elements represents the bolt head and are connected to the closure plate. The bottom of the beam elements represents the threaded region of the bolt and are connected to nodes of elements representing the top flange. The bolt pre-load is applied to the overpack model by applying an initial strain to the beam elements representing the bolts.

The results presented in Appendix 3.AB, Table 3.AB.2, report that the "LANDSTAT" value that tracks the status of the compression spring remains "0" for all bolt elements. This establishes that the seal remains intact under the fire accident conditions.

Additionally, Appendix 3.AF (a new appendix also enclosed with this letter as Attachment 3) performs a stress analysis of the closure bolts under the fire accident temperatures and demonstrates that sufficient bolt load is maintained to ensure the integrity of the seal. For this condition, the bolt load decreases by 11.5% from the pre-load condition; however, a large margin exists against unloading of the bolt. The temperature of the main flange is 524°F as reported in Table 11.2.2 in Chapter 11. Appendix 3.AF will be included in Revision 8 to the HI-STAR TSAR.

It should be noted that after extinguishing a postulated fire, the licensee is directed by the fire accident corrective actions, Subsection 11.2.3.4, to verify the continued presence of the helium atmosphere within the overpack cavity. The analysis summarized above demonstrates that the seals will maintain their integrity during and after the postulated fire accident. However, to provide defense in depth and to ensure the safe operation of the HI-STAR 100 System, the overpack cavity helium atmosphere will be required to be verified as a corrective action following the fire accident condition.

If you have any comments or questions, please contact me.

Sincerely yours,

Bernard Gilligan
Project Manager, HI-STAR/HI-STORM Licensing

Document I.D.: 5014201

Attachments:
1. HI-STAR 100 TSAR, Subsection 3.4.5 (4 copies)
2. HI-STAR 100 TSAR, Appendix 3.AE (4 copies)
3. HI-STAR 100 TSAR, Appendix 3.AF (4 copies)

Approvals:

Gary T. Tjersland
Director of Licensing and Product Development

Concurrences

Dr. Alan Soler (Structural Analysis):

Dr. Indresh Rampall (Thermal Analysis):

Distribution (Letter Only):

	Utility	Holtec Project
Mr. David Bland	Southern Nuclear Operating Company	71188
Mr. J. Nathan Leech	ComEd	50438
Mr. Bruce Patton	Pacific Gas & Electric Co.	71178
Dr. Max DeLong	Private Fuel Storage, LLC	70651
Mr. Rodney Pickard	American Electric Power	70851
Mr. Ken Phy	New York Power Authority	80518
Mr. David Larkin	Washington Public Power Supply System	
Mr. Eric Meils	Wisconsin Electric Power Company	
Mr. Paul Plante	Maine Yankee Atomic Power Company	
Mr. Stan Miller	Vermont Yankee Corporation	
Mr. Jim Clark	SONGS	
Mr. Ray Kellar	ANO	

HOLTEC INTERNATIONAL

Holtec Center, 555 Lincoln Drive West, Marlton, NJ 08053

Telephone (609) 797-0900
Fax (609) 797-0909

BY FAX AND HAND DELIVERY

July 30, 1998

Mr. Mark S. Delligatti
Senior Project Manager
Spent Fuel Licensing Section, SFPO, NMSS
United States Nuclear Regulatory Commission
11555 Rockville Pike
Rockville, MD 20852

Subject: USNRC Docket No. 72-1008
HI-STAR 100 Topical Safety Analysis Report, Revision 7
Comment Resolution Letter No. 8

Reference: Holtec Project 5014

Dear Mr. Delligatti:

In accordance with discussions held with the SFPO staff, Holtec International herein submits this information in response to the NRC's comments. The resolution of these issues will be incorporated into the next revision of the HI-STAR 100 TSAR on August 21, 1998. As required, additional material is enclosed to support SER preparation activities by the NRC staff. Specifically provided as attachments to this letter are Chapters 2, 5, and 6. In each revised chapter, the changes are annotated with a revision bar in the margin.

SHIELDING

NRC Comment

The NRC requested that the textual discussions describing the shielding information submitted by Holtec Comment Resolution Letter No. 5 dated July 27, 1998 be provided to the SFPO to facilitate the SER preparation. Additionally, it was requested that a discussion be provided regarding the determination of the design basis fuel assembly type and the allowable burnup and cooling time values.

Holtec Response

The revised Chapter 5 (without appendices), Shielding Evaluation, is provided in its entirety as Attachment 1 to this letter. The chapter includes all the revised tables previously submitted by Holtec Comment Resolution Letter No. 5 dated July 27, 1998.

In the HI-STAR 100 TSAR Revision 7, the design basis BWR fuel assembly was specified as the GE 8x8R. This determination was based on the knowledge that according to the EIA Service Report "Spent Nuclear Fuel Discharges from U.S. Reactors, 1994", the last discharge of a 7x7

fuel assembly was in 1985 and the maximum average burnup for a 7x7 during their operation was 29,000 MTW/MTU. This clearly indicates that the 7x7 fuel assemblies in storage are well within burnup and cooling times specified in the Technical Specifications of Chapter 12.

Under the approach taken in the HI-STAR TSAR Revision 7, each licensee would be required to verify that the source term for the fuel assemblies to be stored are equal to or less than the values specified in the TSAR. This approach is in accordance with NUREG-1536 and the most recent North Anna Technical Specifications, which specify a neutron and radiation source term. Therefore, this approach ensures that the design basis radiation source term would not be exceeded.

Subsequent to the submittal of the HI-STAR TSAR Revision 7, the SFPO requested that explicit source term calculations be performed for the bounding fuel assembly type in each array size. The source term for each array type was performed at the same burnup, cooling time, and enrichment. Holtec chose to include the GE 7x7 in this evaluation in the interest of conservatism. Also included in this analysis was the GE-12, a 10x10 array. Revision 7 of the HI-STAR TSAR only authorized the SVEA-96 10x10 array. The GE-12 was included at the request of a number of utilities. The source term evaluation for BWR determined that the GE 7x7 was bounding and that the new GE-12 was second. Rather than specifying a separate technical specification limit on the GE 7x7 burnup and cooling time, the GE 7x7 was maintained as the bounding assembly.

The SFPO requested that the source terms be recalculated with lower enrichments to provide additional conservatism. The HI-STAR TSAR Revision 7 was based on a radiation source term technical specification. Therefore, the minimum enrichment is not a factor because each licensee would be required to verify that the fuel to be stored would meet the design basis radiation source term specified in Chapter 12. However, to comply with the SFPO's request Holtec recalculated the source terms based on lower enrichments. This resulted in an increase in the decay heat and radiation source at any given burnup and cooling time. To maintain an equivalent decay heat and radiation source to that used in Revision 7 of the HI-STAR TSAR it was necessary to decrease the allowable burnup at each cooling time.

In the HI-STAR TSAR Revision 7, control components were included by requiring the licensee to ensure that the design basis source term was not exceeded when the source term from the control component is added to the source term of the fuel assembly. The SFPO requested that Holtec determine the bounding control component, a corresponding bounding source term, and the required fuel assembly burnup and cooling to ensure that the fuel assembly source coupled with the control component source is within the design basis. This data was not readily available

and could not be developed in the allotted time. Therefore, control components were removed from the scope of this license. Control components will be added in a future amendment.

CRITICALITY

NRC Comment

The NRC requested that the textual discussions describing the criticality information submitted by Holtec Comment Resolution Letter No. 5 dated July 27, 1998 be provided to the SFPO to facilitate the SER preparation.

Holtec Response

An overview of the revision of Chapter 6, Criticality Evaluation, has been composed and provided as Attachment 2. This document details the changes made to the chapter, as well as, the process used to determine the bounding fuel dimensions for use in the Technical Specifications.

The revised Chapter 6 (without appendices) is provided in its entirety as Attachment 3.

GENERAL

NRC Comment

The NRC requested that any revisions that were required to Chapter 2, Principal Design Criteria, be provided to the SFPO staff to facilitate SER preparation.

Holtec Response

The revised Chapter 2 is provided in Attachment 1. Sections 2.0 and 2.1 are provided in their entirety. The pages that required revision in Sections 2.2 through 2.6 are also provided.

If you have any comments or questions, please contact me.

Sincerely yours,

Bernard Gilligan
Project Manager, HI-STAR/HI-STORM Licensing

Document I.D.: 5014202

Attachments:
1. HI-STAR 100 TSAR, Chapter 5 (4 copies)
2. Overview of the Revision to HI-STAR 100 TSAR, Chapter 6 (4 copies)
3. HI-STAR 100 TSAR, Chapter 6 (4 copies)
4. HI-STAR 100 TSAR, Chapter 2 (4 copies)
5. Revised Pages for the Technical Specifications (4 copies)

Approvals:

Gary T. Tjersland
Director of Licensing and Product Development

Concurrences

Dr. Everett Redmond (Shielding Analysis):

Dr. John Wagner (Criticality Analysis):

Distribution (Letter Only):

	Utility	Holtec Project
Mr. David Bland	Southern Nuclear Operating Company	71188
Mr. J. Nathan Leech	ComEd	50438
Mr. Bruce Patton	Pacific Gas & Electric Co.	71178
Dr. Max DeLong	Private Fuel Storage, LLC	70651
Mr. Rodney Pickard	American Electric Power	70851
Mr. Ken Phy	New York Power Authority	80518
Mr. David Larkin	Washington Public Power Supply System	
Mr. Eric Meils	Wisconsin Electric Power Company	
Mr. Paul Plante	Maine Yankee Atomic Power Company	
Mr. Stan Miller	Vermont Yankee Corporation	
Mr. Jim Clark	SONGS	
Mr. Ray Kellar	ANO	

HOLTEC INTERNATIONAL

Holtec Center, 555 Lincoln Drive West, Marlton, NJ 08053

Telephone (609) 797-0900
Fax (609) 797-0909

SENT BY Fax and FedEx

August 4, 1998

Mr. Mark S. Delligatti
Senior Project Manager
Spent Fuel Licensing Section, SFPO, NMSS
U.S. Nuclear Regulatory Commission
11555 Rockville Pike
Rockville, MD 20852

Subject: USNRC Docket No. 72-1018
HI-STAR 100 Topical Safety Analysis Report
Comment Resolution Letter No. 9

Reference: Holtec Project 5014

Dear Mr. Delligatti:

As we discussed yesterday, this comment resolution letter is being submitted to provide several corrected pages to the HI-STAR 100 TSAR resulting from changes to the criticality, shielding, and thermal analyses which were completed to resolve NRC comments. Enclosed please find four (4) copies each of the following:

- Table 2.1.5 – This table was revised to list the GE12/14 10x10 (Class 10x10A) and B&W 15x15 (Class 15x15F) as the design basis fuel assemblies for reactivity control for BWR and PWR fuel types, respectively. This table now corresponds to the revised criticality results in Chapter 6 of the TSAR.

- Tables 2.1-1 (pages 2.0-6 and 2.0-7 of the Technical Specifications in Chapter 12) – These tables of the Functional and Operating Limits were revised to place specific minimum cooling time, decay heat load, and average burnup limits on BWR array classes 6x6A, 6x6C, and 8x8A. These limits correspond to the actual fuel conditions evaluated in the revised Chapters 4 and 5 for thermal and shielding limitations, respectively.

- Revision 8 to Appendix 5.C – This appendix containing the sample MCNP input file was revised to incorporate changes in the modeling resulting from the NRC's comments. Specific changes are indicated on pages 5.C-2, -16,-17, and –22.

- Section 4.4.1.1.2 – This thermal analyses section was revised to incorporate thermal conductivity results for the three 10x10 BWR array types evaluated, and shows that the results are bounded by the thermal conductivity design basis fuel assembly.

HOLTEC INTERNATIONAL

Holtec Center, 555 Lincoln Drive West, Marlton, NJ 08053

Telephone (609) 797-0900
Fax (609) 797-0909

These changed pages will be incorporated into the final Revision 8 scheduled to be submitted on August 21, 1998.

If you have any comments or questions, please contact me.

Sincerely,

Gary T. Tjersland
Director of Licensing and Product Development
GTT:nlm

Enclosures: As stated.

Document ID: 5014205

Distribution (Letter Only):

Project	Utility	Holtec
Mr. David Bland	Southern Nuclear Operating Company	71188
Mr. J. Nathan Leech	ComEd	50438
Mr. Bruce Patton	Pacific Gas & Electric Co.	71178
Dr. Max DeLong	Private Fuel Storage, LLC	70651
Mr. Rodney Pickard	American Electric Power	70851
Mr. Ken Phy	New York Power Authority	80518
Mr. David Larkin	Washington Public Power Supply System	
Mr. Eric Meils	Wisconsin Electric Power Company	
Mr. Paul Plante	Maine Yankee Atomic Power Company	
Mr. Stan Miller	Vermont Yankee Corporation	
Mr. Jim Clark	SONGS	
Mr. Ray Kellar	ANO	

HOLTEC INTERNATIONAL

Holtec Center, 555 Lincoln Drive West, Marlton, NJ 08053

Telephone (609) 797-0900
Fax (609) 797-0909

BY FAX AND FedEx

August 3, 1998

Mr. Mark S. Delligatti
Senior Project Manager
Spent Fuel Licensing Section, SFPO, NMSS
United States Nuclear Regulatory Commission
11555 Rockville Pike
Rockville, MD 20852

Subject: USNRC Docket No. 72-1008
HI-STAR 100 Topical Safety Analysis Report, Revision 7
Comment Resolution Letter No. 10

Reference: Holtec Project 5014

Dear Mr. Delligatti:

The purpose of this letter is to provide a summary of the Spent Fuel Project Office's (SFPO) comments resulting from the final review of the HI-STAR 100 TSAR in preparation for issuance of a draft Safety Evaluation Report (SER), and Holtec International's responses and completed actions to resolve all comments. Enclosure 1 to this letter provides a summary of the NRC comments made to date and Holtec responses documenting Holtec's actions. Each NRC comment received to date has been addressed by Holtec. The final action outstanding is submittal of Revision 8 to the HI-STAR 100 TSAR, which will be provided to the NRC by August 21, 1998. Revision 8 will delete the discussion and analysis of the MPC-32 canister, and will incorporate all final changes resulting from the NRC comment resolution process. The Technical Specifications of Chapter 12 , and Chapters 2, 5, 6, 7, and 10 have already been provided to the NRC with the MPC-32 removed and the changes incorporated.

Holtec is available at any time to expeditiously respond to any new NRC comments which may arise. If you have any comments or questions, please contact me.

Sincerely yours,

Bernard Gilligan
Project Manager, HI-STAR/HI-STORM Licensing

Document I.D.:5014203

Enclosure: 1. Summary of NRC Comments and Holtec Responses (Four copies)

HOLTEC INTERNATIONAL

Holtec Center, 555 Lincoln Drive West, Marlton, NJ 08053

Telephone (609) 797-0900
Fax (609) 797-0909

Approvals:

Gary T. Tjersland
Director of Licensing and Product Development

Concurrences

Dr. Everett Redmond (Shielding Analysis):

Dr. John Wagner (Criticality Analysis): for John Wagner

Dr. Alan Soler (Structural Analysis):

Dr. Indresh Rampall (Thermal Analysis): Indresh Rampall

Mr. Brian Gutherman (Technical Spec.): FOR BRIAN GUTHERMAN

Distribution (Letter Only):

	Utility	Holtec Project
Mr. David Bland	Southern Nuclear Operating Company	71188
Mr. J. Nathan Leech	ComEd	50438
Mr. Bruce Patton	Pacific Gas & Electric Co.	71178
Dr. Max DeLong	Private Fuel Storage, LLC	70651
Mr. Rodney Pickard	American Electric Power	70851
Mr. Ken Phy	New York Power Authority	80518
Mr. David Larkin	Washington Public Power Supply System	
Mr. Eric Meils	Wisconsin Electric Power Company	
Mr. Paul Plante	Maine Yankee Atomic Power Company	
Mr. Stan Miller	Vermont Yankee Corporation	
Mr. Jim Clark	SONGS	
Mr. Ray Kellar	ANO	

HOLTEC INTERNATIONAL

Holtec Center, 555 Lincoln Drive West, Marlton, NJ 08053

Telephone (609) 797-0900
Fax (609) 797-0909

BY FAX AND FEDEX

August 6, 1998

Mr. Mark S. Delligatti
Senior Project Manager
Spent Fuel Licensing Section, SFPO, NMSS
United States Nuclear Regulatory Commission
11555 Rockville Pike
Rockville, MD 20852

Subject: USNRC Docket No. 72-1008
HI-STAR 100 Topical Safety Analysis Report
Comment Resolution Letter No. 11

Reference: Holtec Project 5014

Dear Mr. Delligatti:

In accordance with your request, provided below is the listing of the effective Holtec International Calculation Packages which support the HI-STAR 100 Topical Safety Analysis Report (TSAR) Revision 6. These were previously transmitted to you via letter dated November 28, 1997 or as noted on the listing. As a result of preparation of Revision 7 to the TSAR, and responding to NRC's questions, the Calculation Packages are currently being revised to support Revision 8 to the TSAR (scheduled to be submitted to you no later than August 21, 1998). The below listed Calculation Packages are currently effective and previous revisions of the listed calculations, or Calculation Packages not listed below are to be considered as void or superceded and should be appropriately dispositioned or returned to Holtec International.

- HI-STAR 100 Structural Calculation Package, HI-971656, Revision 3
- HI-STAR/HI-STORM Confinement Analysis, HI-971721, Revision 3 (Revision 3 transmittal on July 16, 1998)
- HI-STAR 100 Shielding Design and Analysis for Transport and Storage, HI-951322, Revision 5
- Criticality Evaluation HI-STAR 100 Cask Designs, HI-951321, Revision 6
- Effective Thermal Conductivity Evaluations of LWR Fuel Assemblies in Dry Storage Casks, HI-971789, Revision 0
- HI-STAR 100 System Storage and Transport Condition Thermal Evaluation, HI-971826, Revision 0
- HI-STAR 100 System Overpack Effective Thermal Property Calculations, HI-971784, Revision 0
- Effective Property Evaluations of HI-STAR 100 and HI-STORM Dry Cask System Multi-Purpose Canisters, HI-971788, Revision 0.

- Benchmarking of the Holtec LS-DYNA3D Model for Cask Drop Events, HI-971779, Revision 2. (Revision 2 change page transmitted on July 27, 1998 via Comment Resolution Letter No. 5)

As previously discussed, the revision to the "HI-STAR 100 Shielding Design and Analysis for Transport and Storage" will be submitted to the NRC on August 10, 1998. The final revisions to all the Calculations Packages will be maintained at Holtec's offices as archival records.

If you have any questions or comments, please contact me.

Sincerely yours,

Bernard Gilligan
Project Manager, HI-STAR/HI-STORM Licensing

Document ID: 5014206

Approvals:

K.P. Singh, Ph.D.
President

Gary T. Tjersland
Director of Licensing and
Product Development

Distribution (Letter Only):

Project	Utility	Holtec
Mr. David Bland	Southern Nuclear Operating Company	71188
Mr. J. Nathan Leech	ComEd	50438
Mr. Bruce Patton	Pacific Gas & Electric Co.	71178
Dr. Max DeLong	Private Fuel Storage, LLC	70651
Mr. Rodney Pickard	American Electric Power	70851
Mr. Ken Phy	New York Power Authority	80518
Mr. David Larkin	Washington Public Power Supply System	
Mr. Eric Meils	Wisconsin Electric Power Company	
Mr. Paul Plante	Maine Yankee Atomic Power Company	
Mr. Stan Miller	Vermont Yankee Corporation	
Mr. Jim Clark	SONGS	
Mr. Ray Kellar	ANO	

HOLTEC INTERNATIONAL

Holtec Center, 555 Lincoln Drive West, Marlton, NJ 08053

Telephone (609) 797-0900
Fax (609) 797-0909

August 6, 1998

Mr. Mark Delligatti
Senior Project Manager
Spent Fuel Licensing Section, SFPO, NMSS
U.S. Nuclear Regulatory Commission
11555 Rockville Pike
Rockville, MD 20852

Subject: USNRC Docket No, 72-1008
HI-STAR 100 Topical Safety Analysis Report
Comment Resolution Letter No. 12

Reference: Holtec Project No. 5014

Dear Mr. Delligatti,

Holtec International appreciates yesterday's management and technical meetings regarding the ongoing HI-STAR 100 System certification effort. We have proceeded to immediately implement the commitments made to the Spent Fuel Project Office (SFPO) management team and technical staff. In particular, Holtec personnel and representatives of the HI-STAR 100 System Owner's group are currently performing a chapter-by-chapter review of the HI-STAR 100 Topical Safety Analysis Report (TSAR) to ensure that assumptions (both explicit and implicit), and design inputs are adequately supported. This review will also ensure that configuration control has been maintained by confirming that information is consistent among the chapters and consistent with the design source documents, such as calculations and drawings. References to the MPC-32 will also be removed.

This effort will be completed by Tuesday, August 11 and a letter documenting the method of the review and the results will be sent to the NRC on Wednesday, August 12. Documentation packages which will provide a record of these reviews will be maintained at Holtec's offices and made available for review upon request by either in-house or external auditors. The NRC Senior Project Manager (PM) will be informed by phone call immediately if Holtec finds any significant changes which could potentially affect the NRC staff's review. If the Senior PM is unavailable, we will continue to attempt to contact members of SFPO management until we speak directly with someone, rather than leave voice mail messages. Since our TSAR review will proceed through the upcoming weekend, we will inform you early on Monday, August 10 of any significant findings discovered during the weekend.

The TSAR will be revised to reflect the changes made in the chapters to resolve NRC questions and comments since Revision 7 was issued. Revision 8 of the TSAR will be submitted to the NRC on or before August 21, 1998 consistent with our prior agreement. We will inform the Senior PM on the day we intend to mail the TSAR to ensure you are aware that it is coming.

Changes made to the HI-STAR 100 storage application which also apply to the HI-STAR 100 transportation and/or the HI-STORM storage application will be incorporated into the appropriate documents which support those applications. In addition, in order to prevent problems with our HI-STAR 100 transportation and our HI-STORM storage applications, Holtec will perform similar assumption and design input reviews of the HI-STAR transportation Safety Analysis Report (SAR) and HI-STORM storage TSAR., respectively, for those designs. Revision 7 of the HI-STAR 100 System transportation SAR will be submitted to the NRC by November 25, 1998. As discussed yesterday, if significant issues are discovered which could affect the NRC's review, we will inform the Senior PM in a timely manner.

With regard to the technical meeting held concurrent with yesterday's management meeting, the following commitments were made and agreed upon between Holtec personnel and the SFPO staff:

SHIELDING ANALYSIS

1. The current mass of uranium in the Technical Specifications (TS), (which represents the maximum mass of uranium authorized for loading in the HI-STAR 100 System), is equal to the value used in TSAR Chapter 5 for the shielding analysis. The mass of uranium in the Technical Specifications will be reduced to reflect actual fuel assembly configurations and to provide margin between the analysis and the actual mass of uranium authorized for loading. The Technical Specification changes will be formally incorporated with other changes required as a result of the ongoing review process and our meeting to discuss the Technical Specifications scheduled for August 18, 1998. Marked-up TS pages will be forwarded via facsimile by 3:00 PM Friday, August 7, 1998.

2. Additional clarification will be provided in Chapter 5 to demonstrate that the calculation of decay heat values is conservative when compared to published data in the 1992 edition of the DOE Characteristics Database. This clarification will show that the decay heat value from the design basis fuel assembly in Chapter 5 bounds the decay heat values from the other assembly types, including the decay heat from non-fuel hardware. The revised affected TSAR pages will be submitted to the NRC by facsimile by noon Friday, August 7, 1998 and overnight mailed the same day.

THERMAL ANALYSIS

1. Additional justification will be provided for the composite MPC cell wall-Boral-air gap-sheathing thickness used in the ANSYS thermal analysis for both basket types.

2. Additional justification will be provided for the aspect ratios used in analyzing the Rayleigh effect for the fuel basket periphery-to MPC shell gap, considering literature correlations for storage conditions.

3. Additional clarification will be provided regarding the parameter R_o found on page F-6 of Holtec Report HI-971788, "Effective Property Evaluations of HI-STAR 100 and HI-STORM Dry Cask System MPCs", and the basket radius shown on page 44 of Holtec Report HI-971826, "HI-STAR 100 System Storage and Transport Condition Thermal Evaluation."

4. Additional justification will be developed for allowing the storage of one longer-cooled fuel assembly in the center cell location with other less-cooled fuel assemblies in the balance of the MPC cells. This justification is intended to support the premise that the longer-cooled fuel assembly will not exceed the PNL fuel cladding temperature acceptance criteria. If adequate justification cannot be developed, appropriate Technical Specification changes will be developed and justified to administratively control fuel loading for both the MPC-68 and MPC-24 canister configurations.

The requested information on the four thermal analysis items will be transmitted via facsimile by 3:00 PM Friday, August 7, and overnight mailed to the NRC the same day.

If you have any questions or comments, please contact us.

Sincerely,

Bernard Gilligan
Project Manager, HI-STAR/HI-STORM Licensing

BG/bgu

DOCID: 5014209

Approvals:

Gary T. Tjersland, Director
Licensing and Product Development

K. P. Singh, Ph.D.
President and CEO

Technical Concurrence:

Dr. Indresh Rampall (Fluid Mechanics/Heat Transfer) — E Rasmussen for I. Rampall

Dr. Everett Redmond (Shielding)

Mr. Brian Gutherman (Technical Specifications)

HOLTEC INTERNATIONAL

Holtec Center, 555 Lincoln Drive West, Marlton, NJ 08053

Telephone (609) 797-0900
Fax (609) 797-0909

BY FAX AND FedEx

August 7, 1998

Mr. Mark Delligatti
Senior Project Manager
Spent Fuel Licensing Section, SFPO, NMSS
U.S. Nuclear Regulatory Commission
11555 Rockville Pike
Rockville, MD 20852

Subject: USNRC Docket No, 72-1008
HI-STAR 100 Topical Safety Analysis Report
Comment Resolution Letter No. 13

References: 1. Holtec Project No. 5014
2. Holtec letter to NRC dated August 6,1998, DOCID 5014209

Dear Mr. Delligatti,

This correspondence transmits the deliverable for Shielding Analysis item two from Reference 2 above. Attached is the following proposed HI-STAR 100 Topical Safety Analysis Report (TSAR) information which provides the clarification discussed in this commitment:

1. Page 5.2-7 with new Section 5.2.5.3,

2. Page 5.2-36, with new Table 5.2-28, and

3. Page 5.6-2 with new reference 5.2.7.

In addition, discussion of the PWR MOX fuel assembly has been removed from Section 5.2.5.1 as a result of yesterday's discussion with NRC technical staff regarding the criticality review. The affected page is attached to show the information which is being deleted. Note that the page numbering on the attached sheets is not consistent with the draft version of TSAR Revision 8, Chapter 5, submitted last week due to the insertion of new information and the deletion of the PWR MOX fuel discussion. All pagination will be corrected as necessary when the final TSAR Revision 8 is submitted on or before August 21, 1998.

HOLTEC INTERNATIONAL

Holtec Center, 555 Lincoln Drive West, Marlton, NJ 08053

Telephone (609) 797-0900
Fax (609) 797-0909

Also in accordance with yesterday's conference call on criticality issues, Figure 6.3.7 (attached) has been revised to refer to Tables 6.2.1 and 6.2.2 for the active fuel lengths used in the criticality analyses. The following additional commitments were made to reflect discussions in the conference call:

1. Discussion of PWR MOX fuel assemblies will be deleted from Chapter 6 and the Technical Specifications.

2. Fuel Assembly Type 7x7B will be deleted from the list of assemblies authorized for loading in Damaged Fuel Containers (DFCs).

3. Chapter 6 will be revised to correct the fuel assembly reference of 8x8C05 to the correct identification of 8x8C04.

If you have any questions or comments, please contact us.

Sincerely,

Bernard Gilligan
Project Manager, HI-STAR/HI-STORM Licensing

BG/bgu
DOCID: 5014210

Approvals:

Gary T. Tjersland, Director
Licensing and Product Development

K. P. Singh, Ph.D.
President and CEO

HOLTEC INTERNATIONAL

Holtec Center, 555 Lincoln Drive West, Marlton, NJ 08053

Telephone (609) 797-0900
Fax (609) 797-0909

Technical Concurrence:

Dr. Everett Redmond (Shielding)

Dr. John Wagner (Criticality)

Mr. Brian Gutherman (Technical Specifications)

Distribution :

Project	Utility	Holtec
Mr. David Bland	Southern Nuclear Operating Company	71188
Mr. J. Nathan Leech	ComEd	50438
Mr. Bruce Patton	Pacific Gas & Electric Co.	71178
Dr. Max DeLong	Private Fuel Storage, LLC	70651
Mr. Rodney Pickard	American Electric Power	70851
Mr. Ken Phy	New York Power Authority	80518
Mr. David Larkin	Washington Public Power Supply System	
Mr. Eric Meils	Wisconsin Electric Power Company	
Mr. Paul Plante	Maine Yankee Atomic Power Company	
Mr. Stan Miller	Vermont Yankee Corporation	
Mr. Jim Clark	SONGS	
Mr. Ray Kellar	ANO	

BG

HOLTEC INTERNATIONAL

Holtec Center, 555 Lincoln Drive West, Marlton, NJ 08053

Telephone (609) 797-0900
Fax (609) 797-0909

August 7, 1998

Mr. Mark S. Delligatti
Senior Project Manager
Spent Fuel Licensing Section, SFPO, NMSS
U.S. Nuclear Regulatory Commission
11555 Rockville Pike
Rockville, MD 20852

Subject: USNRC Docket No. 72-1008
HI-STAR 100 Topical Safety Analysis Report, TAC No. L22019
Comment Resolution Letter No. 14

Reference: Holtec Project 5014

Dear Mr. Delligatti:

We are pleased to provide resolutions to the four thermal analysis related issues raised by the staff in our August 5, 1998 meeting, and documented in our August 6, 1998 letter to you.

Consistent with our schedule commitment, the responses are being forwarded by the 3:00 p.m. deadline set down by the SFPO management.

We trust that the staff will find these responses to be technically acceptable. We will stand ready to answer any additional residual questions which may remain on the thermal analysis chapter. Upon conclusion of your review, we would look to the SFPO for direction as to whether any of the responses provided herein need to be incorporated in the final revision (Revision 8) of the HI-STAR TSAR.

HOLTEC INTERNATIONAL

Holtec Center, 555 Lincoln Drive West, Marlton, NJ 08053

Telephone (609) 797-0900
Fax (609) 797-0909

We appreciate the thorough and comprehensive scrutiny (of the HI-STAR 100 thermal analysis) which is evident from the latest questions raised by the staff.

Sincerely yours,

Bernard Gilligan
Project Manager, HI-STAR/HI-STORM 100 Licensing

Document ID: 5014211

Attachments: 1. Attachment A to Holtec Letter 5014211
2. Holtec Position Paper DS-208

Technical Concurrence:

Dr. Indresh Rampall (Fluid Mechanics/ Heat Transfer) — Indresh Rampall

Mr. Evan Rosenbaum (Thermal-Hydraulics) — Evan Rosenbaum

Distribution (Letter Only):

Project	Utility	Holtec
Mr. David Bland	Southern Nuclear Operating Company	71188
Mr. J. Nathan Leech	ComEd	50438
Mr. Bruce Patton	Pacific Gas & Electric Co.	71178
Dr. Max DeLong	Private Fuel Storage, LLC	70651
Mr. Rodney Pickard	American Electric Power	70851
Mr. Ken Phy	New York Power Authority	80518
Mr. David Larkin	Washington Public Power Supply System	
Mr. Eric Meils	Wisconsin Electric Power Company	
Mr. Paul Plante	Maine Yankee Atomic Power Company	
Mr. Stan Miller	Vermont Yankee Corporation	
Mr. Jim Clark	SONGS	
Mr. Ray Kellar	ANO	

HOLTEC INTERNATIONAL

Holtec Center, 555 Lincoln Drive West, Marlton, NJ 08053

Telephone (609) 797-0900
Fax (609) 797-0909

BY FAX AND FEDEX

August 7, 1998

Mr. Mark Delligatti
Senior Project Manager
Spent Fuel Licensing Section, SFPO, NMSS
U.S. Nuclear Regulatory Commission
11555 Rockville Pike
Rockville, MD 20852

Subject: USNRC Docket No, 72-1008
HI-STAR 100 Topical Safety Analysis Report, TAC No.L22019
Comment Resolution Letter No. 15

References:
1. Holtec Project No. 5014
2. Holtec letter B. Gilligan to M. Delligatti, NRC dated August 6,1998, Document I.D. 5014209

Dear Mr. Delligatti,

This correspondence transmits the deliverable for Shielding Analysis item one from Reference 2 above. Attached are Technical Specification pages 2.0-17 through 2.0-23 showing the reduced uranium masses allowed for fuel assemblies authorized for loading in the HI-STAR 100 System.

If you have any questions or comments, please contact us.

Sincerely,

Bernard Gilligan
Project Manager, HI-STAR/HI-STORM Licensing

Attachments: As stated

Document I.D.: 5014212

Approvals:

Gary T. Tjersland, Director
Licensing and Product Development

K. P. Singh, Ph.D.
President and CEO

HOLTEC INTERNATIONAL

Holtec Center, 555 Lincoln Drive West, Marlton, NJ 08053

Telephone (609) 797-0900
Fax (609) 797-0909

Technical Concurrence:

Dr. Everett Redmond (Shielding)

Mr. Brian Gutherman (Technical Specifications)

Distribution (Letter and Technical Specification Pages Only):

Project	Utility	Holtec
Mr. David Bland	Southern Nuclear Operating Company	71188
Mr. J. Nathan Leech	ComEd	50438
Mr. Bruce Patton	Pacific Gas & Electric Co.	71178
Dr. Max DeLong	Private Fuel Storage, LLC	70651
Mr. Rodney Pickard	American Electric Power	70851
Mr. Ken Phy	New York Power Authority	80518
Mr. David Larkin	Washington Public Power Supply System	
Mr. Eric Meils	Wisconsin Electric Power Company	
Mr. Paul Plante	Maine Yankee Atomic Power Company	
Mr. Stan Miller	Vermont Yankee Corporation	
Mr. Jim Clark	SONGS	
Mr. Ray Kellar	ANO	

HOLTEC INTERNATIONAL

Holtec Center, 555 Lincoln Drive West, Marlton, NJ 08053

Telephone (609) 797-0900
Fax (609) 797-0909

SENT BY FAX and FedEx

August 7, 1998

Mr. Mark S. Delligatti
Senior Project Manager
Spent Fuel Licensing Section, SFPO, NMSS
U.S. Nuclear Regulatory Commission
11555 Rockville Pike
Rockville, MD 20852

Subject: USNRC Docket No. 72-1008
HI-STAR 100 Topical Safety Analysis Report, TAC No. L22019
Comment Resolution Letter No. 16

Reference: Holtec Project 5014

Dear Mr. Delligatti:

In accordance with today's telephone conference discussions regarding the HI-STAR 100 confinement analyses, Holtec International will provide responses to the seven RAIs of your August 7, 1998 facsimile transmission. An updated Revision 8 to the HI-STAR 100 Confinement chapter incorporating the revised analyses resulting from the responses to the RAIs will also be submitted. All responses and revised documents will be submitted to the NRC by close of business on August 12, 1998.

If you have any additional questions, please contact me.

Sincerely yours,

Bernard Gilligan
Project Manager, HI-STAR/HI-STORM 100 Licensing

Document ID: 5014213

HOLTEC INTERNATIONAL

Holtec Center, 555 Lincoln Drive West, Marlton, NJ 08053

Telephone (609) 797-0900
Fax (609) 797-0909

Approvals:

Gary T. Tjersland
Director of Licensing and
Product Development

K.P. Singh, Ph.D., PE
President and CEO

Technical Concurrence:

Ms. Joy Russell (Confinement)

Distribution (Letter Only):

Project	Utility	Holtec
Mr. David Bland	Southern Nuclear Operating Company	71188
Mr. J. Nathan Leech	ComEd	50438
Mr. Bruce Patton	Pacific Gas & Electric Co.	71178
Dr. Max DeLong	Private Fuel Storage, LLC	70651
Mr. Rodney Pickard	American Electric Power	70851
Mr. Ken Phy	New York Power Authority	80518
Mr. David Larkin	Washington Public Power Supply System	
Mr. Eric Meils	Wisconsin Electric Power Company	
Mr. Paul Plante	Maine Yankee Atomic Power Company	
Mr. Stan Miller	Vermont Yankee Corporation	
Mr. Jim Clark	SONGS	
Mr. Ray Kellar	ANO	

HOLTEC INTERNATIONAL

Holtec Center, 555 Lincoln Drive West, Marlton, NJ 08053

Telephone (609) 797-0900
Fax (609) 797-0909

BY FEDEX

August 8, 1998

Mr. Mark Delligatti
Senior Project Manager
Spent Fuel Licensing Section, SFPO, NMSS
U.S. Nuclear Regulatory Commission
11555 Rockville Pike
Rockville, MD 20852

Subject: USNRC Docket No, 72-1008
HI-STAR 100 Topical Safety Analysis Report, TAC No.L22019
Comment Resolution Letter No. 17

Reference: Holtec Project No. 5014

Dear Mr. Delligatti,

This correspondence transmits Revision 6 to Holtec International Report Number HI-951322, "HI-STAR Shielding Design and Analysis for Transport and Storage." Revision 6 of this report supports Revision 8 of TSAR Chapter 5. This enclosed report is currently effective and the previous revision of the report is to be considered void or superceded and should be appropriately dispositioned or returned to Holtec International.

In addition, clarification was added to Table 5.2.26 to distinguish the source term differences between the WE14x14 and WE15x15 with zircaloy and stainless steel guide tubes. Typographical errors were corrected on Tables 5.2.1, 5.1.3, 5.4.5, 5.4.7, and 5.4.9. These corrections are noted with double revision bars in the right margin.

If you have any questions or comments, please contact us.

Sincerely,

Bernard Gilligan
Project Manager, HI-STAR/HI-STORM Licensing

Enclosures:

1. Report Number HI-951322, "HI-STAR Shielding Design and Analysis for Transport and Storage", Revision 6 (3copies).

2. HI-STAR 100 TSAR pages 5.2-8, -10, -14, -16, -18, and –34.

HOLTEC INTERNATIONAL

Holtec Center, 555 Lincoln Drive West, Marlton, NJ 08053

Telephone (609) 797-0900
Fax (609) 797-0909

Document I.D.: 5014214

Approvals:

Gary T. Tjersland, Director
Licensing and Product Development

K. P. Singh, Ph.D.
President and CEO

Technical Concurrence:

Dr. Everett Redmond (Shielding)

Distribution:

Project	Utility	Holtec
Mr. David Bland	Southern Nuclear Operating Company	71188
Mr. J. Nathan Leech	ComEd	50438
Mr. Bruce Patton	Pacific Gas & Electric Co.	71178
Dr. Max DeLong	Private Fuel Storage, LLC	70651
Mr. Rodney Pickard	American Electric Power	70851
Mr. Ken Phy	New York Power Authority	80518
Mr. David Larkin	Washington Public Power Supply System	
Mr. Eric Meils	Wisconsin Electric Power Company	
Mr. Paul Plante	Maine Yankee Atomic Power Company	
Mr. Stan Miller	Vermont Yankee Corporation	
Mr. Jim Clark	SONGS	
Mr. Ray Kellar	ANO	

HOLTEC INTERNATIONAL

Holtec Center, 555 Lincoln Drive West, Marlton, NJ 08053

Telephone (609) 797-0900
Fax (609) 797-0909

BY FAX AND FEDEX

August 11, 1998

Mr. Mark Delligatti
Senior Project Manager
Spent Fuel Licensing Section, SFPO, NMSS
U.S. Nuclear Regulatory Commission
11555 Rockville Pike
Rockville, MD 20852

Subject: USNRC Docket No, 72-1008
HI-STAR 100 Topical Safety Analysis Report, TAC No.L22019
Comment Resolution Letter No. 18

References: Holtec Project No. 5014

Dear Mr. Delligatti,

This correspondence confirms the discussions and commitments made during telephone conversations held between you, Holtec and NRC technical staff members on Monday, August 10, 1998. We re-confirm that the ongoing enhancements in the HI-STAR 100 Topical Safety Analysis Report, (TSAR) which also pertain to other Holtec applications for spent fuel storage or transportation will be similarly addressed in the Safety Analysis Reports for those applications.

Structural Analysis

The technical staff requested analysis and TSAR discussion justifying the 30 psig set pressure on the overpack neutron shield enclosure rupture disk. Specifically, it should be confirmed by analysis that the 30 psig set pressure will not be reached during normal storage operations due to any potential off-gassing of the neutron shielding material in the overpack. In addition, the neutron shield enclosure shall be demonstrated to withstand the 30 psig internal pressure under normal conditions. Analysis of the 30 psig internal pressure on the overpack neutron shield enclosure under normal conditions will be provided in a separate appendix in TSAR Chapter 3. The appendix will also demonstrate that the resultant pressure from any potential off-gassing will not actuate the rupture disk under normal conditions. This appendix will be submitted to the NRC by 3:00 PM Monday, August 17, 1998.

On a later telephone call, clarification was requested regarding differences between acceleration time-history curves in Holtec's generic cask report (Figures A12 and A16) and Figure D-10 from NUREG/CR-6608. The differences in the curves were explained as arising from an expected result of Holtec appropriately modeling the gap between the MPC and the overpack. No further action is considered necessary to address this issue.

HOLTEC INTERNATIONAL

Holtec Center, 555 Lincoln Drive West, Marlton, NJ 08053

Telephone (609) 797-0900
Fax (609) 797-0909

Containment/Confinement

Holtec described its method of calculating an effective dose conversion factor (DCF) for the dose contribution from fines using a weighted average of the DCFs for those radionuclides in quantities greater than one Curie per fuel assembly. This weighted average DCF was then applied to the entire fine radionuclide inventory. The NRC staff questioned why the DCFs for all of the individual radionuclides were not used and how the value of one Curie was chosen. After some discussion, Holtec agreed to use the individual isotopic DCFs for all isotopes with a quantity greater than or equal to $1x10^{-5}$ Curies per assembly. This value is considered reasonable based on engineering judgement to ensure accurate, conservative dose calculations without unnecessarily including isotopes in negligible quantities. For each isotope, the DCF will be multiplied by the quantity in Curies. These products will then be summed and divided by the total quantity of Curies in a fuel assembly. The result will be an effective DCF for use in the calculation of the dose from fines. This methodology is equivalent to calculating a dose contribution from each nuclide and summing over all nuclides to determine a total dose. The revised TSAR confinement chapter (Chapter 7) and responses to the associated NRC Requests for Additional Information (RAI) will be submitted to the Spent Fuel Project Office on August 12, 1998.

On a second item, Holtec requested clarification of question 7-1 of the Chapter 7 RAI received Friday, August 7, 1998. It was agreed the intent of the question was to provide assurance that the helium would remain in the MPC cavity for the 20-year duration of the Certificate of Compliance.

If you have any questions or comments, please contact us.

Sincerely,

Bernard Gilligan
Project Manager, HI-STAR/HI-STORM Licensing

Document I.D.: 5014216

Approvals:

Gary T. Tjersland, Director
Licensing and Product Development

K. P. Singh, Ph.D.
President and CEO

HOLTEC INTERNATIONAL

Holtec Center, 555 Lincoln Drive West, Marlton, NJ 08053

Telephone (609) 797-0900
Fax (609) 797-0909

Technical Concurrence:

Ms. Joy Russell (Containment/Confinement) For J. Russell

Dr. Alan Soler (Structural Mechanics) For A. Soler

Distribution :

Project	Utility	Holtec
Mr. David Bland	Southern Nuclear Operating Company	71188
Mr. J. Nathan Leech	ComEd	50438
Mr. Bruce Patton	Pacific Gas & Electric Co.	71178
Dr. Max DeLong	Private Fuel Storage, LLC	70651
Mr. Rodney Pickard	American Electric Power	70851
Mr. Ken Phy	New York Power Authority	80518
Mr. David Larkin	Washington Public Power Supply System	
Mr. Eric Meils	Wisconsin Electric Power Company	
Mr. Paul Plante	Maine Yankee Atomic Power Company	
Mr. Stan Miller	Vermont Yankee Corporation	
Mr. Jim Clark	SONGS	
Mr. Ray Kellar	ANO	

HOLTEC INTERNATIONAL

Holtec Center, 555 Lincoln Drive West, Marlton, NJ 08053

Telephone (609) 797-0900
Fax (609) 797-0909

BY FAX AND MAIL

August 11, 1998

Mr. Mark Delligatti
Senior Project Manager
Spent Fuel Licensing Section, SFPO, NMSS
U.S. Nuclear Regulatory Commission
11555 Rockville Pike
Rockville, MD 20852

Subject: USNRC Docket No, 72-1008
HI-STAR 100 Topical Safety Analysis Report, TAC No.L22019
Comment Resolution Letter No. 19

Reference: Holtec Project No. 5014

Dear Mr. Delligatti,

In accordance with today's telecon regarding evaluation of the effects on the decay heat of the spent fuel assemblies due to neutron flux peaking effects (Enclosure 1), enclosed please find the ORIGEN-S results showing the effect to be less than one percent for PWR fuel and less than two percent for BWR fuel. We therefore conclude that the change in decay heat is negligible considering the conservative methodology used in preparation of the source terms and decay heat values. Also enclosed are the results of an evaluation of utilizing a more realistic value for the average specific power. Using published sources, the ORIGEN-S results show a greater than three percent decrease in fuel assembly decay heat, thereby showing that the values reported in the HI-STAR 100 TSAR are conservative. These evaluations were conservatively performed using a single cycle with no downtime.

If you have any questions or comments, please contact us.

Sincerely,

Bernard Gilligan
Project Manager, HI-STAR/HI-STORM Licensing

Enclosure: Decay Heat Study (three pages)

Document I.D.: 5014217

HOLTEC INTERNATIONAL

Holtec Center, 555 Lincoln Drive West, Marlton, NJ 08053

Telephone (609) 797-0900
Fax (609) 797-0909

Approvals:

Gary T. Tjersland, Director
Licensing and Product Development

K. P. Singh, Ph.D.
President and CEO

Technical Concurrence:

Dr. Everett Redmond (Shielding)

Distribution (Letter only):

Project	Utility	Holtec
Mr. David Bland	Southern Nuclear Operating Company	71188
Mr. J. Nathan Leech	ComEd	50438
Mr. Bruce Patton	Pacific Gas & Electric Co.	71178
Dr. Max DeLong	Private Fuel Storage, LLC	70651
Mr. Rodney Pickard	American Electric Power	70851
Mr. Ken Phy	New York Power Authority	80518
Mr. David Larkin	Washington Public Power Supply System	
Mr. Eric Meils	Wisconsin Electric Power Company	
Mr. Paul Plante	Maine Yankee Atomic Power Company	
Mr. Stan Miller	Vermont Yankee Corporation	
Mr. Jim Clark	SONGS	
Mr. Ray Kellar	ANO	

Notes on the Calculation of Decay Heat

The attached two pages compare the calculation of assembly decay heat rates using different methods. The methods are:

1. Calculating the total decay heat rate with ORIGEN-S using the assembly average burnup.
2. Calculating the total decay heat rate with ORIGEN-S by calculating the decay heat rate in each individual axial node using the node specific burnup.
3. Estimating the total decay heat rate by calculating the decay heat rate with ORIGEN-S using the assembly average burnup and increasing the decay heat value from the actinides by a multiplicative factor. This multiplicative factor is equal to the total increase in neutron source term because of the non-linear change in neutron production as a function of burnup.
4. Calculating the total decay heat rate with ORIGEN-S using the assembly average burnup with a lower power density. The power density was derived from data in "World Nuclear Industry Handbook", 1991, a publication of the Nuclear Engineering International magazine.

The results of these comparisons demonstrate that there is negligible difference between calculating the total decay heat rate using the average burnup and calculating the decay heat rate explicitly for each axial node. Therefore using the average burnup is correct. In addition the results demonstrate that using a conservative specific power provides additional margin in the calculation of the decay heat rates.

PWR fuel axial burnup distribution

Calculation of Assembly Burnup Using Average Burnup **Power = 40 MW/MTU**

Node	Burnup	watts/assem.
average	*30000*	*827.53*

Calculation of Assembly Burnup Explicitly **Power = 40 MW/MTU**

Average Burnup=30000 MWD/MTU

Node	Relative Burnup	Actual Burnup	watts/assem.		node height	watts per node
1	0.5485	16455	429.2		6	17.88
2	0.8477	25431	686.5		6	28.60
3	1.077	32310	900.6		12	75.05
4	1.105	33150	928.6		24	154.77
5	1.098	32940	921.6		24	153.60
6	1.079	32370	903.6		24	150.60
7	1.0501	31503	874.6		24	145.77
8	0.9604	28812	789.6		12	65.80
9	0.7338	22014	585.6		6	24.40
10	0.467	14010	363.2		6	15.13
				Total	144	831.60

Calculation of Assembly Burnup Using Actinide Scaling Factor **Power = 40 MW/MTU**

Average 30000 MWD/MTU 1.15568 adjustment

	watts per assembly	watts per assembly with 1.15568 adjustment to actinides
Light Elem	0.53	0.53
Actinides	99.00	114.41
Fiss. Prod.	728.00	728.00
	827.53	842.94

Calculation of Assembly Burnup Using Average Burnup **Power = 31 MW/MTU**

Node	Burnup	watts/assem.
average	*30000*	*797.5*

Comparison of Methods

	watts per assembly	% difference
Reference: decay power from average burnup - 40 MW/MTU	827.53	
decay power explicitly	831.60	**0.49**
decay power from scaling actinides	842.94	1.86
decay power from average burnup - 31 MW/MTU	797.50	-3.63

BWR fuel axial burnup distribution

Calculation of Assembly Burnup Using Average Burnup **Power = 30 MW/MTU**

Node	Burnup	watts/assem.
average	*30000*	*315.65*

Calculation of Assembly Burnup Explicitly **Power = 30 MW/MTU**

Average Burnup = 30,000 MWD/MTU

Node	Relative Burnup	Actual Burnup	watts/assem.		node height	watts per node
1	0.22	6600	65.77		6	2.74
2	0.76	22800	233.6		6	9.73
3	1.035	31050	328.2		12	27.35
4	1.1675	35025	378.4		24	63.07
5	1.195	35850	389.1		24	64.85
6	1.1625	34875	376.8		24	62.80
7	1.0725	32175	342.1		24	57.02
8	0.865	25950	268.4		12	22.37
9	0.62	18600	187.6		6	7.82
10	0.22	6600	65.77		6	2.74
				Total	144	320.48

Calculation of Assembly Burnup Using Actinide Scaling Factor **Power = 30 MW/MTU**

Average 30000 MWD/MTU 1.36942 adjustment

	watts per assembly	watts per assembly with 1.36942 adjustment to actinides
Light Elem	0.35	0.35
Actinides	38.30	52.45
Fiss. Prod.	277.00	277.00
	315.65	329.80

Calculation of Assembly Burnup Using Average Burnup **Power = 21 MW/MTU**

Node	Burnup	watts/assem.
average	*30000*	*297.6*

Comparison of Methods

	watts per assembly	% difference
Reference: decay power from average burnup - 30 MW/MTU	315.65	
decay power explicitly	320.48	1.53
decay power from scaling actinides	329.80	4.48
decay power from average burnup - 21 MW/MTU	297.60	-5.72

HOLTEC INTERNATIONAL

Holtec Center, 555 Lincoln Drive West, Marlton, NJ 08053

Telephone (609) 797-0900
Fax (609) 797-0909

BY FAX AND FEDEX

August 12, 1998

Mr. Mark Delligatti
Senior Project Manager
Spent Fuel Licensing Section, SFPO, NMSS
U.S. Nuclear Regulatory Commission
11555 Rockville Pike
Rockville, MD 20852

Subject: USNRC Docket No, 72-1008
HI-STAR 100 Topical Safety Analysis Report, TAC No.L22019
Comment Resolution Letter No. 20

References: Holtec Project No. 5014

Dear Mr. Delligatti,

This correspondence provides the responses to the NRC's Request for Additional Information (RAI) received on August 7, 1998 regarding confinement issues in Chapter 7 of the HI-STAR 100 Topical Safety Analysis Report, (TSAR).

Section 7.2.2 Pressurization of the Confinement Vessel

Question 7-1

Clarify the "predetermined mass of helium" that the MPC will be inerted with. Confirm that this mass of Helium will maintain the cask at the minimum pressure used in the release analysis over the lifetime of the cask.

NOTE: The intent of this question was clarified by the NRC during a telephone call on August 10, 1998 to mean that assurance should be provided that helium would remain in the MPC cavity for the 20-year duration of the Certificate of Compliance.

Response to Question 7-1

The pre-determined mass of helium with which the MPC must be inerted corresponds to the density of helium, in gram-moles per liter, required to achieve the desired internal MPC pressure based on supporting calculations. This density is specified in the HI-STAR 100 Technical Specifications to be verified during fuel loading operations. The desired pressures vary with MPC type and were originally chosen to support the MPC thermal analyses based on internal thermosiphon flow. While reliance on helium density is no longer necessary since credit for MPC basket thermosiphon action has been eliminated from the thermal analyses, the pressures

HOLTEC INTERNATIONAL
Holtec Center, 555 Lincoln Drive West, Marlton, NJ 08053
Telephone (609) 797-0900
Fax (609) 797-0909

and associated helium backfill densities are appropriate and conservative to ensure sufficient helium is maintained inside the MPC for 20-year duration of the Certificate of Compliance.

During storage conditions, the MPC cavity pressure will rise from ambient to design basis normal conditions due to heat up from decay heat emission by the stored assemblies. The design basis normal condition MPC cavity pressures and temperatures are summarized in Chapter 4 of the HI-STAR TSAR (Holtec Report HI-941184, Rev. 7). During the storage lifetime of the cask, the decay heat attenuates, resulting in a monotonic reduction in the cavity temperatures and pressures. The following bounding calculation demonstrates that the loss of helium over the lifetime of the cask resulting from leakage at the Technical Specification limit at design basis normal condition MPC temperature and pressure is negligibly small. The leak rate calculation is performed at the computed hole diameter based on test conditions and leak rate criteria discussed in Chapter 7 of the HI-STAR TSAR. The input parameters for the leakage rate calculation are presented below:

P_u (upstream pressure) = 58.3 psig (maximum MPC cavity normal condition pressure, Table 4.4.15 of HI-STAR TSAR)

= 4.97 atm

P_d (downstream pressure) = 1 atm (ambient)

$P_a = (P_u + P_d)/2 = 2.98$ atm

a (leakage path length) = 1.9 cm (from TSAR Chapter 7)

d (leak hole diameter) = 11.658×10^{-4} cm (from TSAR Chapter 7)

T (highest MPC cavity average temperature) = 499.2°K (Holtec Calculation Package HI-971826 referenced in HI-STAR TSAR, reference number [4.4.10]).

μ (helium viscosity at T) = 0.028 cp ("Handbook of Heat Transfer", Rohsenow and Hartnett, McGraw Hill, 1973)

M (helium molecular weight) = 4.0 gm/mole (ANSI N14.5, Table B1 referenced in HI-STAR TSAR, reference number [7.3.9]).

HOLTEC INTERNATIONAL
Holtec Center, 555 Lincoln Drive West, Marlton, NJ 08053
Telephone (609) 797-0900
Fax (609) 797-0909

Therefore, the leakage rate based on average pressure P_a is calculated as follows:

$$L_a = (2.49x10^6 \frac{D^4}{a\mu} + 3.81x10^3 \frac{D^3}{aP_a}\sqrt{\frac{T}{M}})(P_u - P_d)$$

Substituting the input parameters, the leakage rate (L_a) is computed to be 3.901 x 10^{-4} cm^3/s. The leakage rate corresponding to upstream conditions (L_a multiplied by the P_a/P_u correction factor) is 2.343 x 10^{-4} cm^3/s. Over a 20-year time frame, the helium loss can therefore be readily calculated based on this constant leak rate. Note that this is conservative relative to a decreasing pressure and temperature time-history of the MPC, both of which would cause the computed leak rate to also drop. The total loss of helium, based on this conservative assumption and bounding leak rate, is equal to $1.478x10^5$ cm^3. Comparing this to the smallest MPC-68 cavity free volume reported in Table 4.4.14 of the Holtec HI-STAR TSAR (i.e., 5,989 liters), the loss of helium is limited to 2.5% of the backfilled amount. This ensures an adequate amount of helium remains in the MPC to support the heat transfer analyses.

Section 7.3.1 Fuel Fission Gases, Volatiles, and Particulates

Question 7-2

Revise Table 7.3.1 and, accordingly, the confinement hypothetical accident evaluation to consider release fraction values from Table 6.2 of NUREG/CR-6487, "Containment Analysis for Type B Packages Used to Transport Various Contents," rather than Table 7.1 of NUREG-1536, "Standard Review Plan for Dry Cask Storage Systems." In addition revise the analysis based on a source term including all isotopes that would be expected to exist in the fuel. The use of an NRC approved code such as SAS2H to generate this source term or the shielding source term is acceptable to the staff for this analysis.

The release fractions in NUREG-1536 are outdated. In addition the analysis does not account for the release of volatiles and fines. The fractions in NUREG/CR-6487 are bounding, and based on more recent experimental data. Further, using this methodology to determine the confinement source terms is consistent with a similar analysis provided under 10 CFR Part 71.

NOTE: In order to perform this calculation correctly, it is important to use the correct release fraction for each element taken into consideration, depending upon whether it is a gas, volatile, or fine (aerosol).

HOLTEC INTERNATIONAL
Holtec Center, 555 Lincoln Drive West, Marlton, NJ 08053
Telephone (609) 797-0900
Fax (609) 797-0909

Response to Question 7-2

In accordance with the NRC's latest guidance on release fractions, Table 7.3.1 has been revised and the confinement hypothetical accident evaluation was performed to consider the release fraction values in Table 6.2 of NUREG/CR-6487 rather than Table 7.1 of NUREG-1536. ORIGEN-S was used to generate the source terms of all isotopes in a quantity greater than or equal to $1x10^{-5}$ Curies per fuel assembly. For the calculated source terms, the release fraction for each isotope was taken into consideration, depending upon whether it is a gas, volatile, or fine (aerosol). TSAR Chapter 7 text has been revised to reflect these changes. Draft Revision 8 of TSAR Chapter 7 is enclosed with this correspondence.

Section 7.3.3.1 Seal Leakage Rate

Question 7-3

Clarify why an upper limit of 70°F was chosen for the test condition temperature.

Based on Equation 7-2, a test done at a higher temperature would yield a larger calculated leakage rate at test conditions, L (1.5 ATM, 294.1K). The choice of this temperature as an upper bound during the calculation would appear to limit the leakage testing allowable conditions to no higher than 70°F. Thus if the temperature was above this value, it would not be possible to show compliance with 10 CFR Part 72.106 based on this calculation for a loaded MPC.

Response to Question 7-3

The previous version of Chapter 7 used an upper limit of 70° F for the test condition temperature. The leakage rate evaluation was re-performed using the helium gas temperature at test conditions of both 70°F and 212°F. These temperatures of the helium gas in the confinement vessel during the helium leak test are based on an assumed ambient temperature of 70°F and an upper bound of 212°F. Since there is water in the MPC during the helium leak test of the MPC lid and the thermal analysis specifies a "time to boil" time limit, the upper bound for the test condition was chosen as 212°F. From the two calculations, it was determined that the higher temperature (212°F) results in a greater leakage rate. Therefore, the confinement hypothetical accident evaluation was revised using the leakage rate determined at the higher temperature. Chapter 7 text has been revised to clarify this information.

HOLTEC INTERNATIONAL
Holtec Center, 555 Lincoln Drive West, Marlton, NJ 08053
Telephone (609) 797-0900
Fax (609) 797-0909

Question 7-4

Revise the seal leakage rate calculation using the methods in ANSI N14.5-1997.

The initial D value determination at test conditions using equation 7-3 appears to be missing the P_a/P_d correction factor that is included in Equation B-5 of ANSI N14.5-1997.

Since the leakage rate correlation used is an average conditions determination, the correlation must be corrected to the location that the leakage rate is measured at.

Response to Question 7-4

Draft Revision 8 TSAR Equation 7-3 did not contain the P_a/P_d correction factor that is included in Equation B-5 of ANSI 114.5-1997. However, this correction factor was accounted for by using Draft Revision 8 TSAR Equation 7-4. For clarity, TSAR Chapter 7 has been revised to combine Equation 7-3 and Equation 7-4 to reflect Equation B-5 of ANSI N14.5-1997. The leakage rate is not affected as a result of this change.

Question 7-5

In Equation 7-3, define the variable $L_{@PT}$

It is unclear whether this variable is the leakage rate at average pressure as specified by $L_{@Pa}$ on page 7.3.4.

Response to Question 7-5

Draft Revision 8 TSAR Equation 7-3 did contain a typographical error. The term should be $L_{@Pa}$ This error has been corrected.

Question 7-6

Update all applicable sections of the SAR to conform to the requested analyses in questions 7-2 through 7-5.

HOLTEC INTERNATIONAL

Holtec Center, 555 Lincoln Drive West, Marlton, NJ 08053

Telephone (609) 797-0900
Fax (609) 797-0909

Response to Question 7-6

Applicable sections of the TSAR have been revised to reflect these changes and clarifications. Final Revision 8 of the HI-STAR 100 TSAR will be provided to the NRC by August 21, 1998 with all applicable sections updated to conform to the responses provided here.

Section 7.3.4 Postulated Accident Doses

Question 7-7

Show how the HOLTEC HI-STAR 100 system complies with the dose limit of 10 CFR Part 72.106(b) and Part 20 for the accident conditions using the revised release fractions, source term, and measured leak rate.

Response to Question 7-7

Chapter 7, Table 7.3.2 presents the revised calculated doses to a real individual at the controlled area boundary (100 meters) determined using the release fractions specified in NUREG/CR-6487. A discussion of the dose limit compliance with regulatory limits is also included in the chapter.

Enclosed is an updated draft Revision 8 to Chapter 7 which incorporates the revised analyses in response to the RAI

If you have any questions or comments, please contact us.

Sincerely,

Bernard Gilligan
Project Manager, HI-STAR/HI-STORM Licensing

Enclosure: Revised Draft Revision 8 of HI-STAR 100 TSAR Chapter 7 (4 copies)

Document I.D.: 5014215

HOLTEC INTERNATIONAL
Holtec Center, 555 Lincoln Drive West, Marlton, NJ 08053
Telephone (609) 797-0900
Fax (609) 797-0909

Approvals:

Gary T. Tjersland, Director
Licensing and Product Development

K. P. Singh, Ph.D.
President and CEO

Technical Concurrence:

Dr. Indresh Rampall (Fluid Mechanics/Heat Transfer) — Indresh Rampall

Ms. Joy Russell (Containment/Confinement) — FOR JOY RUSSELL

Distribution :

Project	Utility	Holtec
Mr. David Bland	Southern Nuclear Operating Company	71188
Mr. J. Nathan Leech	ComEd	50438
Mr. Bruce Patton	Pacific Gas & Electric Co.	71178
Dr. Max DeLong	Private Fuel Storage, LLC	70651
Mr. Rodney Pickard	American Electric Power	70851
Mr. Ken Phy	New York Power Authority	80518
Mr. David Larkin	Washington Public Power Supply System	
Mr. Eric Meils	Wisconsin Electric Power Company	
Mr. Paul Plante	Maine Yankee Atomic Power Company	
Mr. Stan Miller	Vermont Yankee Corporation	
Mr. Jim Clark	SONGS	
Mr. Ray Kellar	ANO	

HOLTEC INTERNATIONAL

Holtec Center, 555 Lincoln Drive West, Marlton, NJ 08053

Telephone (609) 797-0900
Fax (609) 797-0909

BY FAX AND FEDEX

August 12, 1998

Mr. Mark Delligatti
Senior Project Manager
Spent Fuel Licensing Section, SFPO, NMSS
U.S. Nuclear Regulatory Commission
11555 Rockville Pike
Rockville, MD 20852

Subject: USNRC Docket No, 72-1008
HI-STAR 100 Topical Safety Analysis Report, TAC No.L22019
Comment Resolution Letter No. 21

References: Holtec Project No. 5014

Dear Mr. Delligatti,

Pursuant to our meeting on August 5, 1998 and Comment Resolution Letter Number 12 dated August 6, 1998, Holtec International herein provides a summary of our review of the HI-STAR 100 Topical Safety Analysis Report (TSAR). The purpose of the review was to identify inadequately supported assumptions or design inputs and inconsistencies within the TSAR. The review took place at Holtec's offices between Thursday, August 6 and Wednesday, August 12 and was a joint effort between Holtec and its cask owners from Southern Nuclear Operating Company, New York Power Authority, and Commonwealth Edison Company.

In addition to the independent reviews by Owners' representatives, Holtec personnel engaged in the preparation of Revision 8 of the TSAR were also asked to comb through the entire document to identify any internal inconsistencies, lack of clarity, absence of adequate justification for assumptions, or unarticulated assumptions. We are pleased to advise you that while this week-long focussed effort identified some typographical errors and editorial improvement opportunities, no internal inconsistencies were found. One unsubstantiated assumption was, however, discovered which is explained below.

The unsubstantiated assumption pertains to the Damaged Fuel Container (DFC) for BWR fuel. In Section 2.1.3 of the present revision of the TSAR (Revision 7), we state, without supporting analysis, that the long cooling time (and, therefore, reduced decay heat loads) of the spent nuclear fuel permitted to be loaded into the DFC ensures that the cladding temperature of the fuel in the DFC will not be governing. We have now performed explicit analyses which justify the veracity of this assumption. We will clarify this matter in Revision 8 of the TSAR.

HOLTEC INTERNATIONAL

Holtec Center, 555 Lincoln Drive West, Marlton, NJ 08053

Telephone (609) 797-0900
Fax (609) 797-0909

As previously committed, Revision 8 of the TSAR will be delivered to the NRC by August 21, 1998. Our clients' representatives continue to strive along with our project team personnel to deliver an error-free (MPC-32 deleted) Revision 8 document to you by the scheduled deadline.

If you have any questions or comments, please contact us.

Sincerely,

Bernard Gilligan
Project Manager, HI-STAR/HI-STORM Licensing

Document I.D.: 5014219

Approvals:

Gary T. Tjersland, Director
Licensing and Product Development

K. P. Singh, Ph.D.
President and CEO

Distribution :

Project	Utility	Holtec
Mr. David Bland	Southern Nuclear Operating Company	71188
Mr. J. Nathan Leech	ComEd	50438
Mr. Bruce Patton	Pacific Gas & Electric Co.	71178
Dr. Max DeLong	Private Fuel Storage, LLC	70651
Mr. Rodney Pickard	American Electric Power	70851
Mr. Ken Phy	New York Power Authority	80518
Mr. David Larkin	Washington Public Power Supply System	
Mr. Eric Meils	Wisconsin Electric Power Company	
Mr. Paul Plante	Maine Yankee Atomic Power Company	
Mr. Stan Miller	Vermont Yankee Corporation	
Mr. Jim Clark	SONGS	
Mr. Ray Kellar	ANO	

HOLTEC INTERNATIONAL

Holtec Center, 555 Lincoln Drive West, Marlton, NJ 08053

Telephone (609) 797-0900
Fax (609) 797-0909

BY FAX AND FEDEX

August 13, 1998

Mr. Mark Delligatti
Senior Project Manager
Spent Fuel Licensing Section, SFPO, NMSS
U.S. Nuclear Regulatory Commission
11555 Rockville Pike
Rockville, MD 20852

Subject: USNRC Docket No, 72-1008
HI-STAR 100 Topical Safety Analysis Report, TAC No.L22019
Comment Resolution Letter No. 22

Reference: Holtec Project No. 5014

Dear Mr. Delligatti,

Two telephone calls were held Wednesday, August 12, 1998 and Thursday, August 13, 1998 between the NRC Spent Fuel Project Office (SFPO) and Holtec International to discuss issues related to the NRC staff review of the HI-STAR 100 System Topical Safety Analysis Report (TSAR). This correspondence confirms the commitments and resolutions made during those telephone calls regarding radiation protection, quality assurance, criticality, and Technical Specifications.

Radiation Protection (TSAR Chapter 10)

NRC Comment

Section 10.3 needs additional rationale for the number of workers and task durations assumed for the dose estimates.

Response

The TSAR text will be revised to include the additional rationale. The revised draft Revision 8 Chapter 10 TSAR pages will be provided to the NRC on August 17,1998.

NRC Comment

Table 10.3.1 has zeroes in the dose column with non-zero numbers in the dose rate, duration, and number of workers columns.

HOLTEC INTERNATIONAL

Holtec Center, 555 Lincoln Drive West, Marlton, NJ 08053

Telephone (609) 797-0900
Fax (609) 797-0909

Response

The final TSAR Revision 8 of Technical Specification Table 2.1-3 will be submitted to the SFPO incorporating the requested changes by August 21, 1998.

If you have any questions or comments, please contact us.

Sincerely,

Bernard Gilligan
Project Manager, HI-STAR/HI-STORM Licensing

Document I.D.: 5014220

Approvals:

Gary T. Tjersland, Director
Licensing and Product Development

K. P. Singh, Ph.D.
President and CEO

Technical Cocurrence:

Dr. Everett Redmond (Shielding)

Dr. John Wagner (Criticality)

Mr. Stephen Agace (Radiation Protection)

Mr. Vik Gupta (Quality Assurance)

Mr. Brian Gutherman (Technical Specifications)

HOLTEC INTERNATIONAL
Holtec Center, 555 Lincoln Drive West, Marlton, NJ 08053
Telephone (609) 797-0900
Fax (609) 797-0909

Distribution :

Project	Utility	Holtec
Mr. David Bland -	Southern Nuclear Operating Company	71188
Mr. J. Nathan Leech	ComEd	50438
Mr. Bruce Patton	Pacific Gas & Electric Co.	71178
Dr. Max DeLong	Private Fuel Storage, LLC	70651
Mr. Rodney Pickard	American Electric Power	70851
Mr. Ken Phy	New York Power Authority	80518
Mr. David Larkin	Washington Public Power Supply System	
Mr. Eric Meils	Wisconsin Electric Power Company	
Mr. Paul Plante	Maine Yankee Atomic Power Company	
Mr. Stan Miller	Vermont Yankee Corporation	
Mr. Jim Clark	SONGS	
Mr. Ray Kellar	ANO	

HOLTEC INTERNATIONAL

Holtec Center, 555 Lincoln Drive West, Marlton, NJ 08053

Telephone (609) 797-0900
Fax (609) 797-0909

BY FEDEX

August 15, 1998

Mr. Mark S. Delligatti
Senior Project Manager
Spent Fuel Licensing Section, SFPO, NMSS
U.S. Nuclear Regulatory Commission
11555 Rockville Pike
Rockville, MD 20852

Subject: USNRC Docket No, 72-1008
HI-STAR 100 Topical Safety Analysis Report, TAC No.L22019
Comment Resolution Letter No. 23

References:
1. Holtec Project No. 5014
2. Holtec Comment Resolution Letter No. 18 (Gilligan) to NRC (Delligatti) dated August 11, 1998
3. Holtec Comment Resolution Letter No. 22 (Gilligan) to NRC (Delligatti) dated August 13, 1998

Dear Mr. Delligatti,

In References 2 and 3 above, Holtec International committed to providing revised information regarding the structural and radiation protection evaluations, respectively, for the HI-STAR 100 System Topical Safety Analysis Report (TSAR). Four copies each of the following documents are enclosed for your review:

1. Draft new Appendix 3AG to Chapter 3, Structural Evaluation. The rupture disk on the overpack neutron shield enclosure has a set pressure of 30 psig. This new appendix provides the structural analysis which demonstrates that the neutron shield enclosure is designed to withstand the 30 psig internal pressure under normal operating conditions. It also confirms that the resultant pressure from any potential offgassing of the neutron shielding material during normal operation will not actuate the rupture disk.

2. Revised draft Revision 8 TSAR Section 10.3. This section has been revised to include additional rationale for the number of workers and task durations assumed for the dose estimates.

3. Revised draft Revision 8 TSAR Table 10.3.1. This table has been revised to provide the corrected dose values for the various cask loading, unloading, and transfer activities.

4. Revised draft Revision 8 TSAR Section 10.4.1. This section has been expanded to include clarifying information from the shielding chapter (Chapter 5). Specifically, the section has

HOLTEC INTERNATIONAL

Holtec Center, 555 Lincoln Drive West, Marlton, NJ 08053

Telephone (609) 797-0900
Fax (609) 797-0909

been revised to include the annual dose from a single cask at 100 meters, and the dose and distances at which the annual 25 mRem dose limit will be satisfied for both a single cask and a 2x5 cask array. The section has also been revised to include discussion of the major assumptions (i.e., the concrete surface and the array pitch) used in the shielding analyses.

5. Revised draft Revision 8 TSAR Section 10.4.2. This section has been expanded to include information from the shielding chapter (Chapter 5) for the loss of neutron shield accident condition and from the confinement chapter (Chapter 7) for the postulated loss of confinement accident condition.

All of the above information will be included in Revision 8 TSAR to be submitted to the Spent Fuel Project Office on August 21, 1998.

If you have any questions or comments, please contact us.

Sincerely,

Bernard Gilligan
Project Manager, HI-STAR/HI-STORM Licensing

Document I.D.: 5014222

Enclosures: As stated

Approvals:

Gary T. Tjersland, Director
Licensing and Product Development

K. P. Singh, Ph.D.
President and CEO

HOLTEC INTERNATIONAL

Holtec Center, 555 Lincoln Drive West, Marlton, NJ 08053

Telephone (609) 797-0900
Fax (609) 797-0909

Technical Concurrence:

Dr. Everett Redmond (Shielding)

Dr. Alan I. Soler (Structural Analysis)

Mr. Stephen Agace (Radiation Protection)

Distribution :

Project	Utility	Holtec
Mr. David Bland	Southern Nuclear Operating Company	71188
Mr. J. Nathan Leech	ComEd	50438
Mr. Bruce Patton	Pacific Gas & Electric Co.	71178
Dr. Max DeLong	Private Fuel Storage, LLC	70651
Mr. Rodney Pickard	American Electric Power	70851
Mr. Ken Phy	New York Power Authority	80518
Mr. David Larkin	Washington Public Power Supply System	
Mr. Eric Meils	Wisconsin Electric Power Company	
Mr. Paul Plante	Maine Yankee Atomic Power Company	
Mr. Stan Miller	Vermont Yankee Corporation	
Mr. Jim Clark	SONGS	
Mr. Ray Kellar	ANO	

HOLTEC INTERNATIONAL

Holtec Center, 555 Lincoln Drive West, Marlton, NJ 08053

Telephone (609) 797-0900
Fax (609) 797-0909

BY FAX AND HAND-DELIVERY

August 17, 1998

Mr. Mark S. Delligatti
Senior Project Manager
Spent Fuel Licensing Section, SFPO, NMSS
U.S. Nuclear Regulatory Commission
11555 Rockville Pike
Rockville, MD 20852

Subject: USNRC Docket No, 72-1008
HI-STAR 100 Topical Safety Analysis Report, TAC No.L22019
Comment Resolution Letter No. 24

Reference: Holtec Project No. 5014

Dear Mr. Delligatti,

Enclosed please find four copies of revised draft Revision 8 Table 10.3.3 for the HI-STAR 100 System Topical Safety Analysis Report (TSAR). This table has been revised to reflect new dose rates and doses arising from our review of the tasks involved in cask security surveillance and maintenance activities. Specifically, the estimated dose rates have been reduced for security surveillance from 27.5 mrem/hr to 4 mrem/hr and for annual maintenance from 53.1 mrem/hr to 50 mrem/hr. Both dose rates have been reduced to reflect the revised shielding analyses. The dose rate for security surveillance has been additionally reduced to reflect the fact that the surveillance activity will be performed outside the ISFSI perimeter, providing more distance between the casks and security personnel than previously assumed. The value of 4 mrem/hr was chosen based on the regulatory limit of 2 mrem/hr from 10CFR20.1301(a)(2) for an unrestricted area, plus margin.

Revised Table 10.3.3 will be included in Revision 8 of the TSAR to be submitted to the Spent Fuel Project Office (SFPO) on August 21, 1998.

In a telephone call this morning, two items regarding the shielding and criticality evaluations were clarified:

1. TSAR Figure 5.3.10 and the text in Section 5.3.1 will be revised to reflect the different Multi-Purpose Canister (MPC) lid thicknesses between the MPC-24 (9 ½ inches) and the MPC-68 (10 inches). The shielding analyses used the appropriate MPC lid thickness for the respective MPC designs. The enhanced figure and text will be included in TSAR Revision 8 to be submitted to the SFPO on August 21, 1998.

HOLTEC INTERNATIONAL

Holtec Center, 555 Lincoln Drive West, Marlton, NJ 08053

Telephone (609) 797-0900
Fax (609) 797-0909

2. The water rod thickness for the 10x10A class assembly will be corrected in TSAR Tables 2.1.4 and 6.2.30, and Technical Specification Table 2.1-3. The correct water rod thickness for this assembly is 0.0300 inch. The revised tables will be included in Revision 8 of the TSAR to be submitted to the SFPO on August 21, 1998.

If you have any questions or comments, please contact us.

Sincerely,

Bernard Gilligan
Project Manager, HI-STAR/HI-STORM Licensing

Document I.D.: 5014223

Enclosure: Revised Draft Revision 8 of TSAR Table 10.3.3 (4 copies)

Approvals:

for Gary T. Tjersland, Director
Licensing and Product Development

K. P. Singh, Ph.D.
President and CEO

Technical Concurrence:

Mr. Stephen Agace (Radiation Protection)

Dr. Everett Redmond (Shielding)

Dr. John Wagner (Criticality)

HOLTEC INTERNATIONAL

Holtec Center, 555 Lincoln Drive West, Marlton, NJ 08053

Telephone (609) 797-0900
Fax (609) 797-0909

Distribution :

Project	Utility	Holtec
Mr. David Bland	Southern Nuclear Operating Company	71188
Mr. J. Nathan Leech	ComEd	50438
Mr. Bruce Patton	Pacific Gas & Electric Co.	71178
Dr. Max DeLong	Private Fuel Storage, LLC	70651
Mr. Rodney Pickard	American Electric Power	70851
Mr. Ken Phy	New York Power Authority	80518
Mr. David Larkin	Washington Public Power Supply System	
Mr. Eric Meils	Wisconsin Electric Power Company	
Mr. Paul Plante	Maine Yankee Atomic Power Company	
Mr. Stan Miller	Vermont Yankee Corporation	
Mr. Jim Clark	SONGS	
Mr. Ray Kellar	ANO	

HOLTEC INTERNATIONAL

Holtec Center, 555 Lincoln Drive West, Marlton, NJ 08053

Telephone (609) 797-0900
Fax (609) 797-0909

SENT BY FAX AND MAIL

August 18, 1998

Mr. Mark S. Delligatti
Senior Project Manager
Spent Fuel Licensing Section, SFPO, NMSS
United States Nuclear Regulatory Commission
11555 Rockville Pike
Rockville, MD 20852

Subject: USNRC Docket No. 72-1008
HI-STAR 100 Topical Safety Analysis Report, TAC No. L22019
Comment Resolution Letter No. 25

Reference: Holtec Project 5014

Dear Mr. Delligatti:

In accordance with your request, enclosed are four (4) copies of the Revision 8 draft of Chapter 11 (Accident Analyses) of the HI-STAR 100 TSAR. The final TSAR Revision 8 will be submitted on August 21, 1998.

If you have any final questions, please contact us.

Sincerely yours,

Bernard Gilligan
Project Manager, HI-STAR/HI-STORM Licensing

Document I.D.:5014226

Enclosures: As stated.

Approvals:

Gary T. Tjersland
Director of Licensing and Product Development

K.P. Singh, Ph.D., PE
President and CEO

HOLTEC INTERNATIONAL

Holtec Center, 555 Lincoln Drive West, Marlton, NJ 08053

Telephone (609) 797-0900
Fax (609) 797-0909

Distribution (Letter Only):

	Utility	Holtec Project
Mr. David Bland	Southern Nuclear Operating Company	71188
Mr. J. Nathan Leech	ComEd	50438
Mr. Bruce Patton	Pacific Gas & Electric Co.	71178
Dr. Max DeLong	Private Fuel Storage, LLC	70651
Mr. Rodney Pickard	American Electric Power	70851
Mr. Ken Phy	New York Power Authority	80518
Mr. David Larkin	Washington Public Power Supply System	
Mr. Eric Meils	Wisconsin Electric Power Company	
Mr. Paul Plante	Maine Yankee Atomic Power Company	
Mr. Stan Miller	Vermont Yankee Corporation	
Mr. Jim Clark	SONGS	
Mr. Ray Kellar	ANO	

HOLTEC INTERNATIONAL

Holtec Center, 555 Lincoln Drive West, Marlton, NJ 08053

Telephone (609) 797-0900
Fax (609) 797-0909

SENT BY FAX

August 20, 1998

Mr. Mark S. Delligatti
Senior Project Manager
Spent Fuel Licensing Section, SFPO, NMSS
United States Nuclear Regulatory Commission
11555 Rockville Pike
Rockville, MD 20852

Subject: USNRC Docket No. 72-1008
HI-STAR 100 Topical Safety Analysis Report, TAC No. L22019
Comment Resolution Letter No. 26

Reference: Holtec Project 5014

Dear Mr. Delligatti:

This comment resolution letter documents the information provided by Holtec International to the SFPO staff on the thermal issues in the August 18, 1998 meeting. The issues raised by the staff were the following:

1. Explain the discrepancy between the effective SNF conductivity listed in the TSAR and ANSYS data provided to the staff.

2. Evaluate the consequence of the aspect ratio in certain peripheral regions exceeding 40.

3. Confirm that the in-plane equivalent conductivity of the composite box wall is correct.

The responses to these questions are provided in Attachments 1, 2 and 3, respectively.

This comment resolution letter will be included in Chapter 12 of the TSAR (Revision 8) due to be sent by FedEx to the SFPO this evening.

Sincerely,

Bernard Gilligan
Project Manager, HI-STAR/HI-STORM Licensing
BG:nlm
Document I.D. 5014227

Attachments: Attachment 1 (ten pages)
Attachment 2 (one page)
Attachment 3 (three pages, including a color figure)

HOLTEC INTERNATIONAL

Holtec Center, 555 Lincoln Drive West, Marlton, NJ 08053

Telephone (609) 797-0900
Fax (609) 797-0909

Approvals:

Gary T. Tjersland, Director
Licensing and Product Development

(Exec V.P.) for KP Singh
K. P. Singh, Ph.D.
President and CEO

Technical Concurrences:

Dr. Indresh Rampall (Thermal-Hydraulic): Indresh Rampall

Mr. Evan Rosenbaum (Thermal-Hydraulic): Evan Rosenbaum

Distribution (letter only):

Project	Utility	Holtec
Mr. David Bland	Southern Nuclear Operating Company	71188
Mr. J. Nathan Leech	ComEd	50438
Mr. Bruce Patton	Pacific Gas & Electric Co.	71178
Dr. Max DeLong	Private Fuel Storage, LLC	70651
Mr. Rodney Pickard	American Electric Power	70851
Mr. Ken Phy	New York Power Authority	80518
Mr. David Larkin	Washington Public Power Supply System	
Mr. Eric Meils	Wisconsin Electric Power Company	
Mr. Paul Plante	Maine Yankee Atomic Power Company	
Mr. Stan Miller	Vermont Yankee Corporation	
Mr. Jim Clark	SONGS	
Mr. Ray Kellar	ANO	

HOLTEC INTERNATIONAL

Holtec Center, 555 Lincoln Drive West, Marlton, NJ 08053

Telephone (609) 797-0900
Fax (609) 797-0909

SENT BY FAX

August 20, 1998

Mr. Mark S. Delligatti
Senior Project Manager
Spent Fuel Licensing Section, SFPO, NMSS
United States Nuclear Regulatory Commission
11555 Rockville Pike
Rockville, MD 20852

Subject: USNRC Docket No. 72-1008
HI-STAR 100 Topical Safety Analysis Report, TAC No. L22019
Comment Resolution Letter No. 27

Reference: Holtec Project 5014

Dear Mr. Delligatti:

In today's telephone conference calls between the NRC and Holtec, the SFPO staff requested the following clarifications and changes in assumptions:

STRUCTURAL

NRC Comment

Regarding Holtec Design Drawing No. 1399, Sheet 3 of 3, the NRC requested clarification on whether the rear pocket trunnion penetrated the inner shell of the HI-STAR 100 overpack.

Holtec Response

Holtec advised that only the intermediate shells were represented on the drawing and that the base of the pocket trunnion does not penetrate the cask's inner shell. As shown in Section "N-N" of the drawing, the inner shell weld prep of the baseplate is shown, but the inner shell was left out for clarity.

No further action is required for this comment.

HOLTEC INTERNATIONAL

Holtec Center, 555 Lincoln Drive West, Marlton, NJ 08053

Telephone (609) 797-0900
Fax (609) 797-0909

CONFINEMENT

NRC Comment

The NRC staff requested that Holtec not use an effective dose conversion factor (DCF) for fires. The NRC recommended that isotopes contributing 0.1% or greater to the total inventory be considered as fires and that the specific DCF for these isotopes be applied. The staff also advised that an accident duration of 30 days may be more appropriate than the previously assumed 365 days, as any accident which could cause 100% fuel rod rupture would be observed by the required visual surveillance, and appropriate corrective actions would then be taken to mitigate the accident.

Holtec Response

Holtec will perform the re-analysis of the accident condition release in Chapter 7 of the TSAR based on the 30-day duration and utilizing the actual DCFs for each major contributing radionuclide available for release (>0.1% of inventory in Curies).

NRC Comment

Due to changes in regulatory guidance regarding storage confinement analyses to bring it into conformance with standard transport cask leakage analyses, the NRC requested that Holtec perform an analysis of normal condition leakage from the MPC, and determine the annual dose at 100 meters.

Holtec Response

Holtec will perform an annual dose assessment at 100 meters for normal storage condition leakage. The tested leakage rate plus the test sensitivity will be used as the total leak rate from the MPC. The radionuclides available for release from the MPC will be based on 1% fuel rod failure. The analysis results will be reported in Chapters 7 and 10.

HOLTEC INTERNATIONAL

Holtec Center, 555 Lincoln Drive West, Marlton, NJ 08053

Telephone (609) 797-0900
Fax (609) 797-0909

TECHNICAL SPECIFICATION

The NRC staff requested that the Technical Specifications include a definition of Planar Average Enrichment for BWR fuel assemblies.

Holtec Response

The Technical Specifications will include a definition of Planar Average Enrichment for BWR fuel assemblies. Also, the maximum planar average enrichment will be specified in Technical Specification Table 2.1-1.

The revised confinement analyses and the correction to the Technical Specifications will be incorporated into the final Revision 8 of the TSAR to be submitted to the NRC on August 21, 1998.

If you have further comments, please contact me.

Sincerely,

Bernard Gilligan
Project Manager, HI-STAR/HI-STORM Licensing
Document I.D. 5014228

Approvals:

Gary T. Tjersland, Director
Licensing and Product Development

HOLTEC INTERNATIONAL

Holtec Center, 555 Lincoln Drive West, Marlton, NJ 08053

Telephone (609) 797-0900
Fax (609) 797-0909

Technical Concurrences:

Dr. Alan Soler (Structural): Alan Soler

Ms. Joy Russell (Confinement): Joy Russell

Mr. Brian Gutherman (Technical Specifications): Brian Gutherman

Distribution:

Project	Utility	Holtec
Mr. David Bland	Southern Nuclear Operating Company	71188
Mr. J. Nathan Leech	ComEd	50438
Mr. Bruce Patton	Pacific Gas & Electric Co.	71178
Dr. Max DeLong	Private Fuel Storage, LLC	70651
Mr. Rodney Pickard	American Electric Power	70851
Mr. Ken Phy	New York Power Authority	80518
Mr. David Larkin	Washington Public Power Supply System	
Mr. Eric Meils	Wisconsin Electric Power Company	
Mr. Paul Plante	Maine Yankee Atomic Power Company	
Mr. Stan Miller	Vermont Yankee Corporation	
Mr. Jim Clark	SONGS	
Mr. Ray Kellar	ANO	

CHAPTER 13†: QUALITY ASSURANCE

13.0 QUALITY ASSURANCE PROGRAM

13.0.1 Overview

This chapter provides a summary of the quality assurance program implemented for activities related to the design, qualification analyses, material procurement, fabrication, assembly, testing and use of structures, systems, and components of the HI-STAR 100 System designated as important to safety.

Important-to-safety activities related to construction and deployment of the HI-STAR 100 System are controlled under the NRC-approved Holtec Quality Assurance Program. The NRC approved the Holtec QA program manual (Reference [13.0.2]) under Docket 71-0784 (Reference [13.0.4]). The Holtec QA program satisfies the requirements of 10 CFR 72, Subpart G and 10 CFR 71, Subpart H. In accordance with 10 CFR 72.140(d), this approved 10 CFR 71 QA program will be applied to spent fuel storage cask activities under 10 CFR 72. The additional recordkeeping requirements of 10 CFR 72.174 are addressed in the Holtec QA program manual and must also be complied with.

The Holtec QA program is implemented through a hierarchy of procedures and documentation, listed below.

1. Holtec Quality Assurance Program Manual

2. Holtec Quality Assurance Procedures

3. a. Holtec Standard Procedures

   b. Holtec Project Procedures

Quality activities performed by others on behalf of Holtec are governed by the supplier's quality assurance program or Holtec's QA program extended to the supplier. The type and extent of Holtec QA control and oversight is specified in the procurement documents for the specific item or service being procured. The fundamental goal of the supplier oversight portion of Holtec's QA program is to provide assurance that activities performed in support of the supply of safety-significant items and services are performed correctly and in compliance with the procurement documents.

† This chapter has been prepared in the format and section organization set forth in Regulatory Guide 3.61. However, the material content of this chapter also fulfills the intent of NUREG-1536. Pagination and numbering of sections, figures, and tables are consistent with the convention set down in Chapter 1, Section 1.0, herein. Finally, all terms-of-art used in this chapter are consistent with the terminology of the glossary (Table 1.0.1) and component nomenclature of the Bill-of-Materials (Section 1.5).

13.0.2 Graded Approach to Quality Assurance

For the HI-STAR 100 System, Holtec uses a graded approach to quality assurance. This graded approach is controlled by Holtec Quality Assurance (QA) program documents as described in Section 13.0.1.

NUREG/CR-6407 [13.0.1] provides descriptions of quality categories A, B and C. Using the guidance in NUREG/CR-6407, Holtec International assigns a quality category to each individual, important-to-safety component of the HI-STAR 100 System. The categories assigned to the cask components are identified in Table 2.2.6. Quality categories for ancillary equipment are provided in Table 8.1.4 on a generic basis. Quality categories for other equipment needed to deploy the HI-STAR 100 System at a licensee's ISFSI are defined on a case-specific basis considering the component's design function.

Activities affecting quality are defined by the purchaser's procurement contract for use of the HI-STAR 100 System at an independent spent fuel storage installation (ISFSI) under the general license provisions of 10CFR72, Subpart K. They may include any or all of the following: design, procurement, fabrication, handling, shipping, storing, cleaning, assembly, inspection, testing, operation, maintenance, repair and monitoring of HI-STAR 100 structures, systems, and components that are important to safety.

The quality assurance program described in the QA Program Manual fully complies with the requirements of 10CFR72 Subpart G and the intent of NUREG-1536 [13.0.3]. However, NUREG-1536 does not explicitly address incorporation of a QA program manual by reference. Therefore, invoking the NRC-approved QA program in this FSAR constitutes a literal deviation from NUREG-1536 and has accordingly been added to the list of deviations in Table 1.0.3. This deviation is acceptable since important-to-safety activities are implemented in accordance with the latest revision of the Holtec QA program manual and implementing procedures. Further, incorporating the QA Program Manual by reference in this FSAR avoids duplication of information between the implementing documents and the FSAR and any discrepancies that may arise from simultaneous maintenance to the two program descriptions governing the same activities.

13.1 through 13.5 INTENTIONALLY DELETED

† This chapter has been prepared in the format and section organization set forth in Regulatory Guide 3.61. However, the material content of this chapter also fulfills the intent of NUREG-1536. Pagination and numbering of sections, figures, and tables are consistent with the convention set down in Chapter 1, Section 1.0, herein. Finally, all terms-of-art used in this chapter are consistent with the terminology of the glossary (Table 1.0.1) and component nomenclature of the Bill-of-Materials (Section 1.5).

13.6 REFERENCES

[13.0.1] NUREG/CR-6407, "Classification of Transportation Packaging and Dry Spent Fuel Storage System Components According to Importance to Safety," February 1996.

[13.0.2] Holtec International Quality Assurance Program, Latest Approved Revision.

[13.0.3] NUREG-1536, "Standard Review Plan for Dry Cask Storage Systems," January 1997.

[13.0.4] NRC QA Program Approval for Radioactive Material Packages No. 0784, Docket 71-0784.