APR1400
DESIGN CONTROL DOCUMENT TIER 2

CHAPTER 5
REACTOR COOLANT SYSTEM AND CONNECTING SYSTEMS

APR1400-K-X-FS-13002
REVISION 0
SEPTEMBER 2013

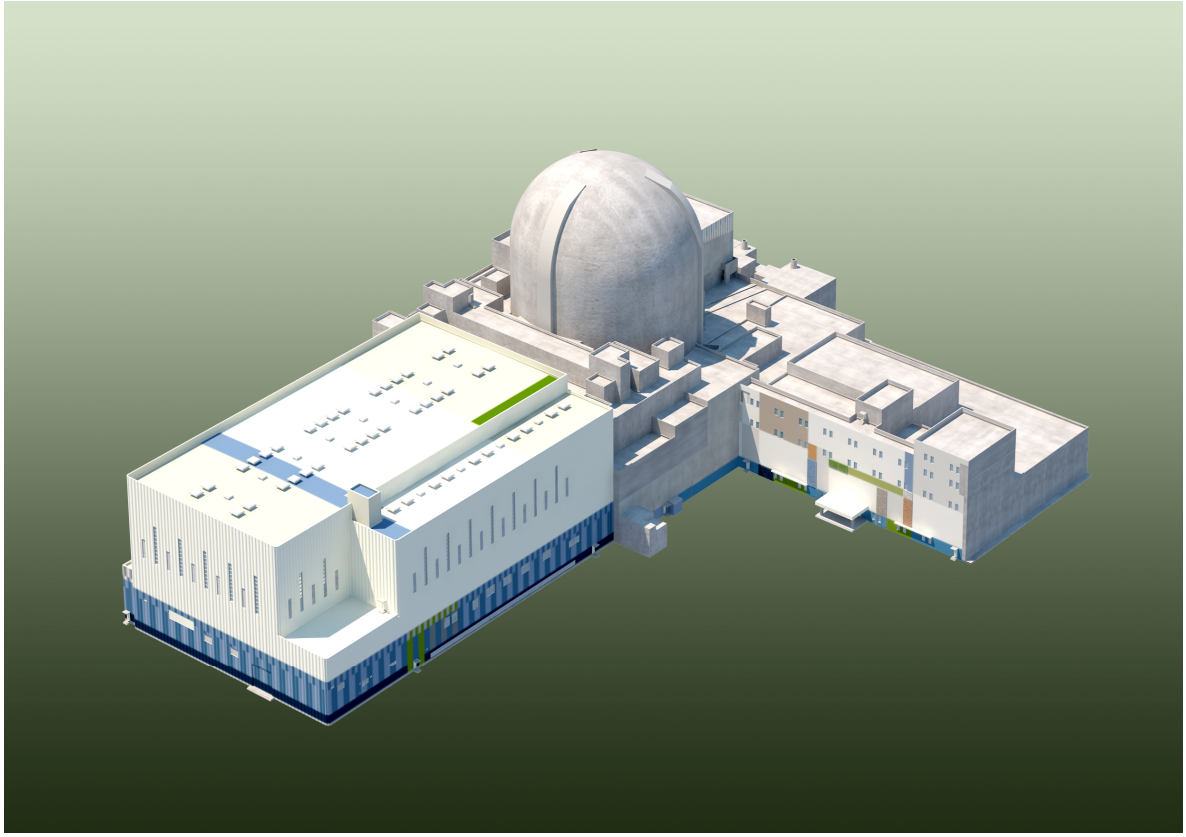

KOREA ELECTRIC POWER CORPORATION
KOREA HYDRO & NUCLEAR POWER CO., LTD

CHAPTER 5 – REACTOR COOLANT SYSTEM AND CONNECTING SYSTEMS

TABLE OF CONTENTS

LIST OF TABLES

LIST OF FIGURES

ACRONYM AND ABBREVIATION LIST

ADV	Atmospheric Dump Valve
ALMS	Acoustic Leak Monitoring System
ANS	American Nuclear Society
ANSI	American National Standards Institute
ART	Adjusted Reference Temperature
ASME	American Society of Mechanical Engineers
ASTM	American Society for Testing And Materials
BAC	Boric Acid Corrosion
BLPB	Branch Line Pipe Break
BTP	Branch Technical Position
CCW	Component Cooling Water
CCWS	Component Cooling Water System
CEDM	Control Element Drive Mechanism
CFR	Code of Federal Regulations
CM	Condition Monitoring
CMTR	Certified Material Test Report
COL	Combined License
CSAS	Containment Spray Actuation Signal
CSP	Containment Spray Pump
CSS	Containment Spray System
CVCS	Chemical and Volume Control System
CVN	Charpy V-Notch
DBE	Design Basis Event
DCD	Design Control Document
DO	Dissolved Oxygen
DVI	Direct Vessel Injection
EDT	Equipment Drain Tank
EOL	End of Life
EPRI	Electric Power Research Institute

ERVC	External Reactor Vessel Cooling
FCAW	Flux Cored Arc Welding
FEI	Fluid Elastic Instability
GDC	General Design Criteria (of 10 CFR 50, Appendix A)
GTAW	Gas Tungsten Arc Weld
HAZ	Heat-affected Zone
HJTC	Heated Junction Thermocouple
HX	Heat Exchanger
ICI	In-Core Instrumentation
IEEE	Institute of Electrical and Electronics Engineers
IHA	Integrated Head Assembly
IPS	Information Processing System
IRWST	In-Containment Refueling Water Storage Tank
ISI	Inservice Inspection
ISLOCA	Intersystem Loss of Coolant Accident
IST	Inservice Testing
ITAAC	Inspections, Tests, Analyses, and Acceptance Criteria
LBB	Leak Before Break
LOCA	Loss of Coolant Accident
LOCV	Loss of Condenser Vacuum
LST	Lowest Service Temperature
LTOP	Low Temperature Overpressure Protection
MCR	Main Control Room
MOV	Motor-Operated Valve
MRP	Material Reliability Program
MSSV	Main Steam Safety Valve
NCC	Natural Circulation Cooldown
NDE	Nondestructive Examination
NEI	Nuclear Energy Institute
NEMA	National Electrical Manufacturers Association

NPSH	Net Positive Suction Head
OA	Operational Assessment
OM	Operator's Module
P&ID	Piping and Instrumentation Diagram
POSRV	Pilot Operated Safety Relief Valve
PSI	Preservice Inspection
P-T Limit	Pressure-Temperature Limitation
PTLR	Pressure and Temperature Limits Report
PTS	Pressurized Thermal Shock
PVRC	Pressure Vessel Research Committee
PWR	Pressurized Water Reactor
PWSCC	Primary Water Stress Corrosion Cracking
PZR	Pressurizer
QIAS	Qualified Indication and Alarm System
RCGVS	Reactor Coolant Gas Vent System
RCP	Reactor Coolant Pump
RCPB	Reactor Coolant Pressure Boundary
RCS	Reactor Coolant System
RDT	Reactor Drain Tank
RG	Regulatory Guide
RPS	Reactor Protection System
RTD	Resistance Temperature Detector
RTE	Random Turbulent Excitation
RT_{NDT}	Reference Temperature
RV	Reactor Vessel
RVI	Reactor Vessel Internal
RVUH	Reactor Vessel Upper Head
SAFDL	Specified Acceptable Fuel Design Limit
SAW	Submerged Arc Welding
SCC	Stress Corrosion Cracking

SCP	Shutdown Cooling Pump
SCS	Shutdown Cooling System
SDCHX	Shutdown Cooling Heat Exchanger
SG	Steam Generator
SIAS	Safety Injection Actuation Signal
SIS	Safety Injection System
SIT	Safety Injection Tank
SMAW	Shielded Metal Arc Weld
SRP	Standard Review Plan
SSC	Structures, Systems, and Components
SSE	Safe Shutdown Earthquake
TMI	Three Mile Island
T_{NDT}	Nil-Ductility Transition Temperature
TT	Thermally Treated
USE	Upper-Shelf Energy
USNRC	U.S. Nuclear Regulatory Commission
VCT	Volume Control Tank
WPS	Welding Procedure Specification
WRC	Welding Research Council

CHAPTER 5 – REACTOR COOLANT SYSTEM AND CONNECTING SYSTEMS

5.1 Summary Description

The reactor is a pressurized water reactor (PWR) with two coolant loops. The reactor coolant system (RCS) circulates water in a closed cycle, removing heat from the reactor core and internals and transferring it to a secondary system. The reactor vessel, steam generators, reactor coolant pumps, pressurizer, and associated piping are the major components of the RCS. Two parallel heat transfer loops, each containing one steam generator and two reactor coolant pumps, are connected to the reactor vessel, and one pressurizer is connected to one of the reactor vessel hot legs. All RCS components are located inside the containment building. Table 5.1.1-1 shows the principal parameters of the RCS. The reactor coolant pressure boundary (RCPB) components are consistent with 10 CFR 50.2 (Reference 1) and 10 CFR 50.55a (Reference 2). Applicable codes and standards of RCS components are listed in Table 3.2-1. The reactor vessel (RV) is equipped with suitable provision for connecting the head vent that meets the requirements of 10 CFR 50.34 (f)(2)(vi) (Reference 3) (Three Mile Island(TMI) Action Item II.B.1).

The functions of the RCS are as follows:

a. Energy transfer from the reactor core to the steam generator (SG) where steam is produced for use in the turbine generator

b. Secondary barrier to the release of fission products from the reactor core to the environment

c. Sufficient cooling during all normal plant operations and expected transients to preclude significant fuel damage

d. Reactor coolant circulation with the required chemistry and boron concentration

e. System pressure control to a moderate extent through sprays

f. Rapid depressurization of the RCS by manual operation of the pressurizer pilot operated safety relief valves (POSRVs)

g. Venting of steam and noncondensable gases from RV closure head and pressurizer steam space

The major components of the RCS are as follows:

a. Reactor vessel: The reactor vessel contains fuel bundles, control rods, and other internals necessary for core support and flow direction. The six reactor coolant nozzles, two outlet and four inlet, are located with their centerlines on a common horizontal plane. The reactor vessel is a vertical right cylinder with two hemispherical heads. The lower head is welded to the reactor vessel shell and contains 61 in-core instrumentation penetrations. The upper closure head can be removed to provide access to the reactor vessel internals. The head is penetrated by 103 control element drive mechanism (CEDM) nozzles: eight of the nozzles are capped-off CEDM spares, and two are used for heated junction thermocouples (HJTCs). The reactor vessel is described in Section 5.3.

b. Steam generators: The steam generators provide the interface between the reactor coolant system and the main steam system. The steam generators are vertical U-tube heat exchangers with an integral economizer in which heat is transferred from the reactor coolant to the main steam system. Reactor coolant is prevented from mixing with the secondary steam by the steam generator tubes and the steam generator tube sheet, making the RCS a closed system that serves as a barrier to the release of radioactive materials from the core of the reactor to the secondary system and the containment building. The steam generators are described in Subsection 5.4.2.

c. Reactor coolant pumps: The four identical reactor coolant pumps (RCPs) are vertical single-stage, bottom suction, horizontal discharge, motor-driven centrifugal pumps designed to overcome the system flow resistances and circulate the reactor coolant at the flow rate required for design power operation. A flywheel on the shaft above the motor provides rotating inertia to increase the RCP coastdown time and reduce the rate of decay of reactor coolant flow if electrical power to the RCP motors is lost. The RCPs are described in Subsection 5.4.1.

d. Reactor coolant piping: Each of the heat transfer loops contains five pipe assemblies: one 106.7 cm (42 in) internal diameter pipe assembly between the reactor vessel outlet nozzle and SG inlet nozzle, two 76.2 cm (30 in) internal diameter pipe assemblies from the SG's two outlet nozzles to the RCP suction nozzles, and two 76.2 cm (30 in) internal diameter pipe assemblies from the RCP discharge nozzles to the reactor vessel inlet nozzles. The pipe assemblies are referred to as the hot leg, suction legs, and pump discharge legs. The pressurizer surge line is a 30 cm (12 in) schedule 160 pipe assembly that is located between the pressurizer and the hot leg in Loop 2. The reactor coolant piping is described in Subsection 5.4.3, and a typical arrangement of the piping is shown in Figures 5.1.3-1 and 5.1.3-2.

e. Pressurizer: The pressurizer is a vertical cylindrical vessel with a hemispherical top and bottom head. Electric heaters are installed vertically through the bottom head, and the spray nozzle and POSRV nozzles are mounted on the top head. The pressurizer is connected to the hot leg in RCS Loop 2 by the surge line. RCS pressure is controlled by the pressurizer where steam and water are maintained in thermal equilibrium. Steam is formed by energizing immersion heaters in the pressurizer or is condensed by the pressurizer spray to limit pressure variations caused by the contraction or expansion of the reactor coolant. The average temperature of the reactor coolant varies with power level changing the pressurizer water level as the fluid expands or contracts. The charging control valves and letdown orifice isolation valves in the chemical and volume control system (CVCS) are used to maintain a programmed pressurizer water level. The pressurizer is described in Subsection 5.4.10.

f. Pressurizer POSRVs: Overpressure protection for the reactor coolant pressure boundary is provided by four POSRVs connected to the top of the pressurizer. These valves discharge to the in-containment refueling water storage tank where the steam is released under water to be condensed and cooled. Pressurizer POSRVs are described in Subsection 5.4.14.

5.1.1 Schematic Flow Diagram

The schematic flow diagram of the RCS is shown in Figure 5.1.1-1. The principal pressures, temperatures, and design minimum flow rates of the RCS under normal steady-

state, full-power operating conditions are provided in Table 5.1.1-2. The RCS volumes at cold conditions are shown in Table 5.1.1-3.

5.1.2 Piping and Instrumentation Diagram

The piping and instrument diagram (P&ID) of the RCS is shown in Figure 5.1.2-1. The entire RCS is located within the containment. Fluid systems that are connected to the RCS and within the limits of the reactor coolant pressure boundary, as defined in ANSI/ANS 51.1 (Reference 4), are identified and the relevant piping and instrument diagrams are referenced in other sections. The piping and instrument diagrams for the reactor coolant pumps and the pressurizer are provided in Figures 5.1.2-2 and 5.1.2-3, respectively.

The major components of the system are an RV, two parallel heat transfer loops, each containing one SG and two RCPs, and a pressurizer connected to the hot leg in RCS Loop 2. All of these major system components are located inside the containment building.

During normal operation, the reactor coolant is circulated through the RV and SGs by the RCPs. The reactor coolant is heated by fission energy produced in the core as it passes through the RV and is cooled in the SGs as it gives up heat to the secondary system.

The reactor coolant also serves as a neutron absorber (boron) for reactivity control. Except for some local boiling in the hottest channels in the core, the reactor coolant remains in a subcooled condition by maintaining a high system pressure. The RCS provides a barrier against the uncontrolled release of reactor coolant and radioactive materials to the containment.

RCS pressure is controlled by the pressurizer, where steam and water are maintained in thermal equilibrium. Steam is formed by energizing immersion heaters in the pressurizer, or is condensed by the pressurizer spray to limit pressure variations caused by contraction or expansion of the reactor coolant.

Overpressure protection for the RCS is provided by four POSRVs connected to the top of the pressurizer. These valves discharge to the in-containment refueling water storage tank, where the steam is released under water to be condensed and cooled. If the steam

discharge exceeds the capacity of the in-containment refueling water storage tank, it is vented to the containment atmosphere.

The RCS is interfaced with a number of auxiliary systems, including the main steam supply system, CVCS, SCS, SIS, CCWS, and sampling system.

The isolation valves are connected in series to the RCS and are a part of the RCPB. The isolation valves are designed to meet the exclusion requirements of 10 CFR 50.55a(c).

5.1.3 Elevation Drawings

The reactor coolant system arrangement plan and elevation drawings are provided as Figures 5.1.3-1 and 5.1.3-2, respectively.

Major components of the RCS are surrounded by concrete structures that provide support plus shielding and missile protection as needed. General arrangement drawings illustrating principal dimensions of the RCS in relationship to the surrounding building structures are presented in Figures 1.2-2 through 1.2-8 in Section 1.2.

5.1.4 Combined License Information

No COL information is required with regard to Section 5.1.

5.1.5 References

1. 10 CFR 50.2, “Definitions,” NRC Regulations Title 10.

2. 10 CFR 50.55a, “Codes and Standards,” NRC Regulations Title 10.

3. 10 CFR 50.34, “Contents of Applications; Technical Information,” NRC Regulations Title 10.

4. ANSI/ANS 51.1-1983, “American National Standard Nuclear Safety Criteria for the Design of Stationary Pressurized Water Reactor Plant,” April 1983.

Table 5.1.1-1

Reactor Coolant System Design Parameters

Parameter	Value
Design thermal power, MWt (including net heat addition from pumps)	4,000
Design pressure, kg/cm^{2}A (psia)	175.8 (2,500)
Design temperature (except pressurizer), °C (°F)	343.3 (650)
Pressurizer design temperature, °C (°F)	371.1 (700)
Coolant flow rate, kg/hr (lbm/hr)	75.6×10^6 (166.6×10^6)
Cold leg temperature, operating, °C (°F)	290.6 (555)
Average temperature, operating, °C (°F)	307.2 (585)
Hot leg temperature, operating, °C (°F)	323.9 (615)
Normal operating pressure, kg/cm^{2}A (psia)	158.2 (2,250)
System water volume, m^3 (ft^3) (with pressurizer)	455.3 (16,079)
Pressurizer water volume, m^3 (ft^3) (full power)	33.2 (1,171)
Pressurizer steam volume, m^3 (ft^3) (full power)	35.7 (1,260)

Table 5.1.1-2

Process Data Point Tabulation (1)

Parameter	Pressurizer ①(2)	Steam Generator 1 Midpoint ②(2)	Pump Suction ③(2)	Pump Outlet ④(2)	Reactor Vessel Midpoint ⑤(2)	Hot Leg ⑥(2)	Steam Generator 2 Midpoint ⑦(2)
Pressure, kg/cm^2A (psia)	158.2 (2,250)	157.5 (2,240)	156.1 (2,220)	163.8 (2,330)	161.7 (2,300)	158.9 (2,260)	157.5 (2,240)
Temperature, °C (°F)	344.8 (652.7)	307.2 (585.0)	290.6 (555.0)	290.6 (555.0)	308.8 (587.8)	323.9 (615.0)	307.2 (585.0)
Mass flow rate, kg/hr (lbm/hr)	N/A	37.8×10^6 (83.3×10^6)	18.9×10^6 (41.65×10^6)	18.9×10^6 (41.65×10^6)	75.6×10^6 (166.6×10^6)	37.8×10^6 (83.3×10^6)	37.8×10^6 (83.3×10^6)
Volumetric flow rate, L/min (gpm)	N/A	885,707 (233,979)	421,854 (111,442)	421,854 (111,442)	1,778,538 (469,840)	940,076 (284,342)	885,707 (233,979)

(1) For steady state, 100 % power conditions

(2) See Figure 5.1.1-1 for data points

Table 5.1.1-3

Reactor Coolant System Volumes

Component	Volume(1)
RV, m^3 (ft^3)	166.3 (5,872.2)
Steam generators, m^3 (ft^3)	86.8 (3,067.0) (each), without tube plugging
RCPs, m^3 (ft^3)	3.26 (115) (each)
Pressurizer, m^3 (ft^3)	68.0 (2,400)
Piping: Hot leg, m^3 (ft^3) Cold leg, m^3 (ft^3)	 3.8 (135.6) (each) 6.2 (219.9) (each)
Surge line, m^3 (ft^3) (nominal)	1.3 (44.9)
Spray line, m^3 (ft^3)	0.5 (17.1)

(1) Volumes determined at cold 21 °C (70 °F) conditions

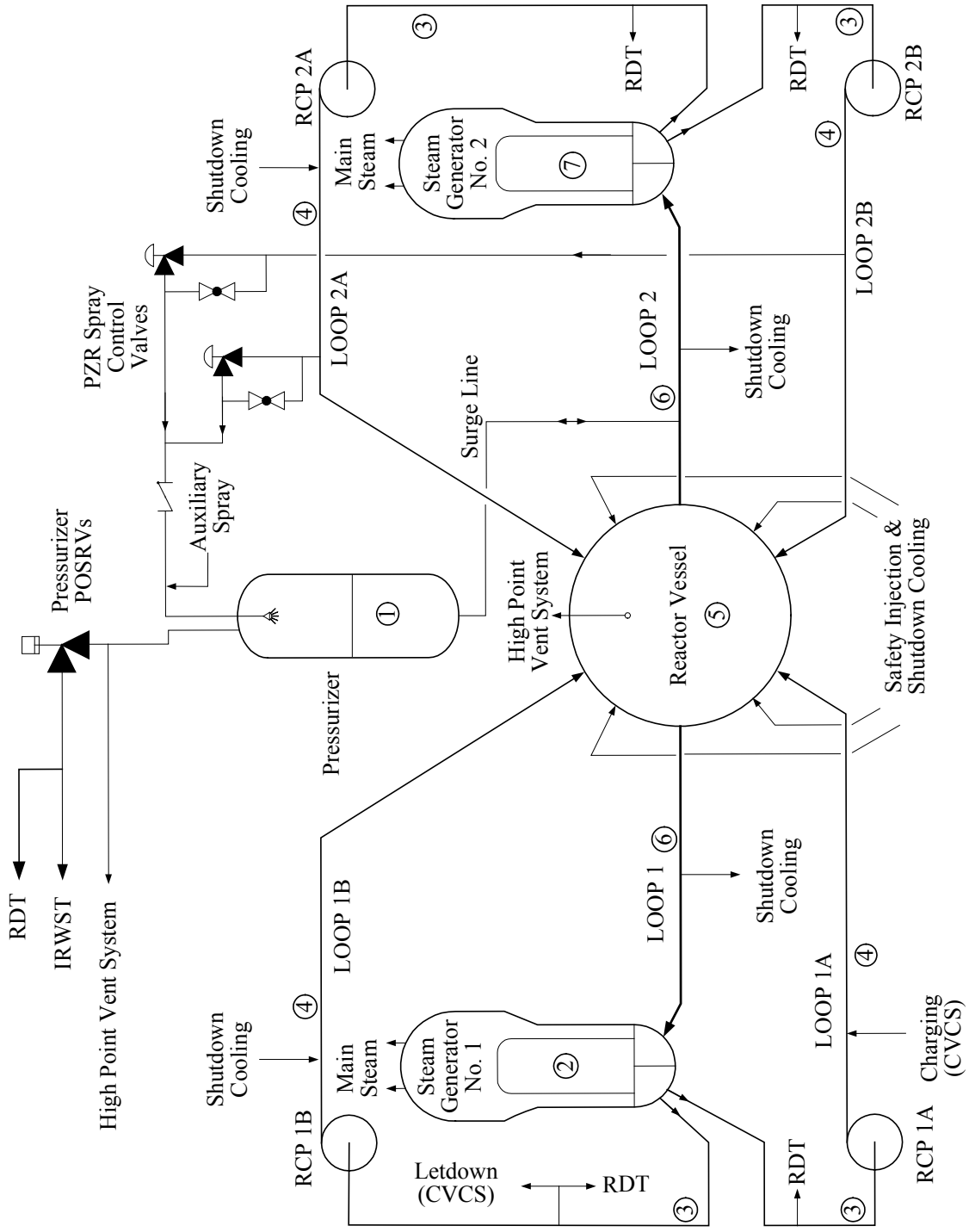

Figure 5.1.1-1 Reactor Coolant System Schematic Flow Diagram

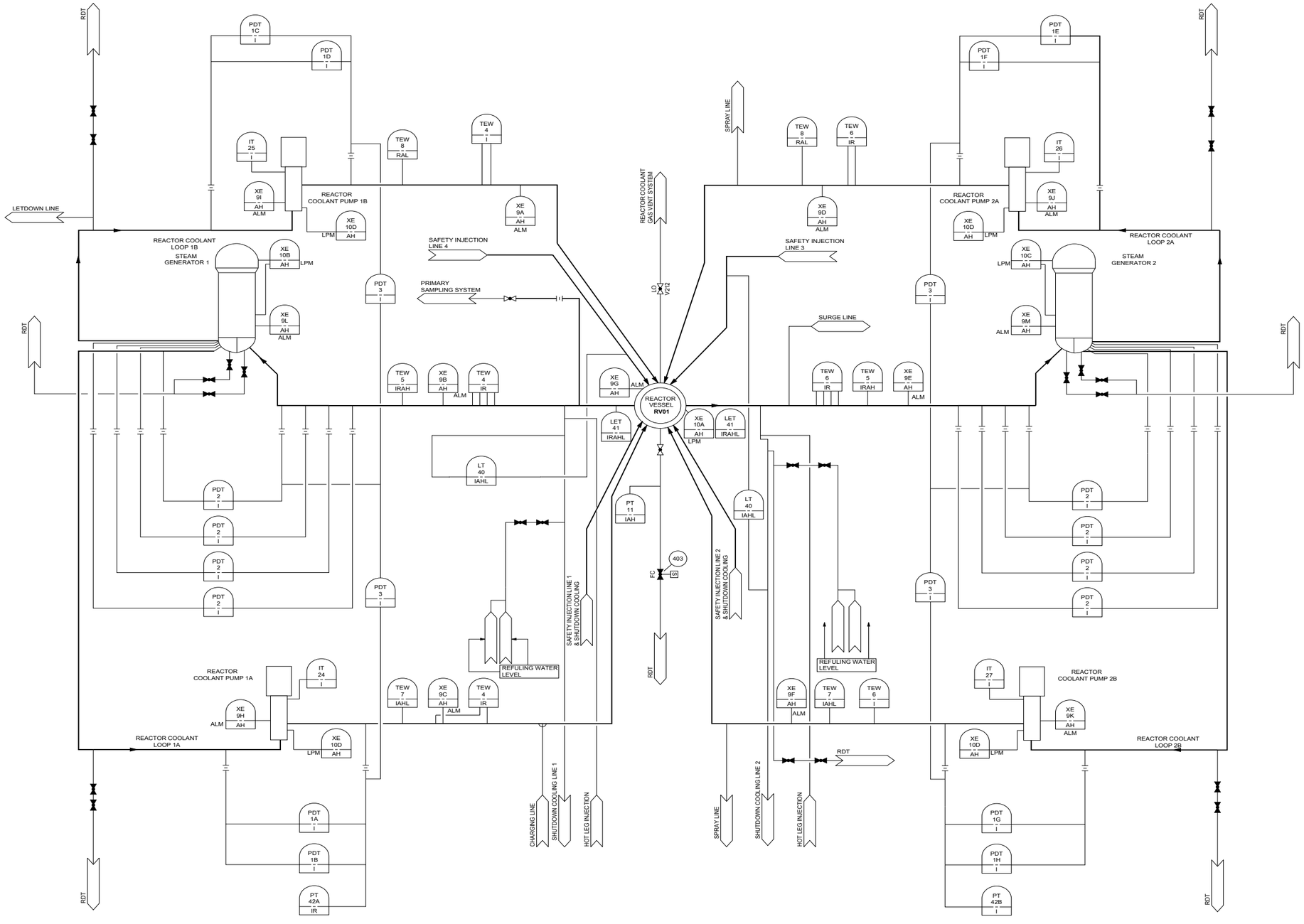

Figure 5.1.2-1 Reactor Coolant System P&ID

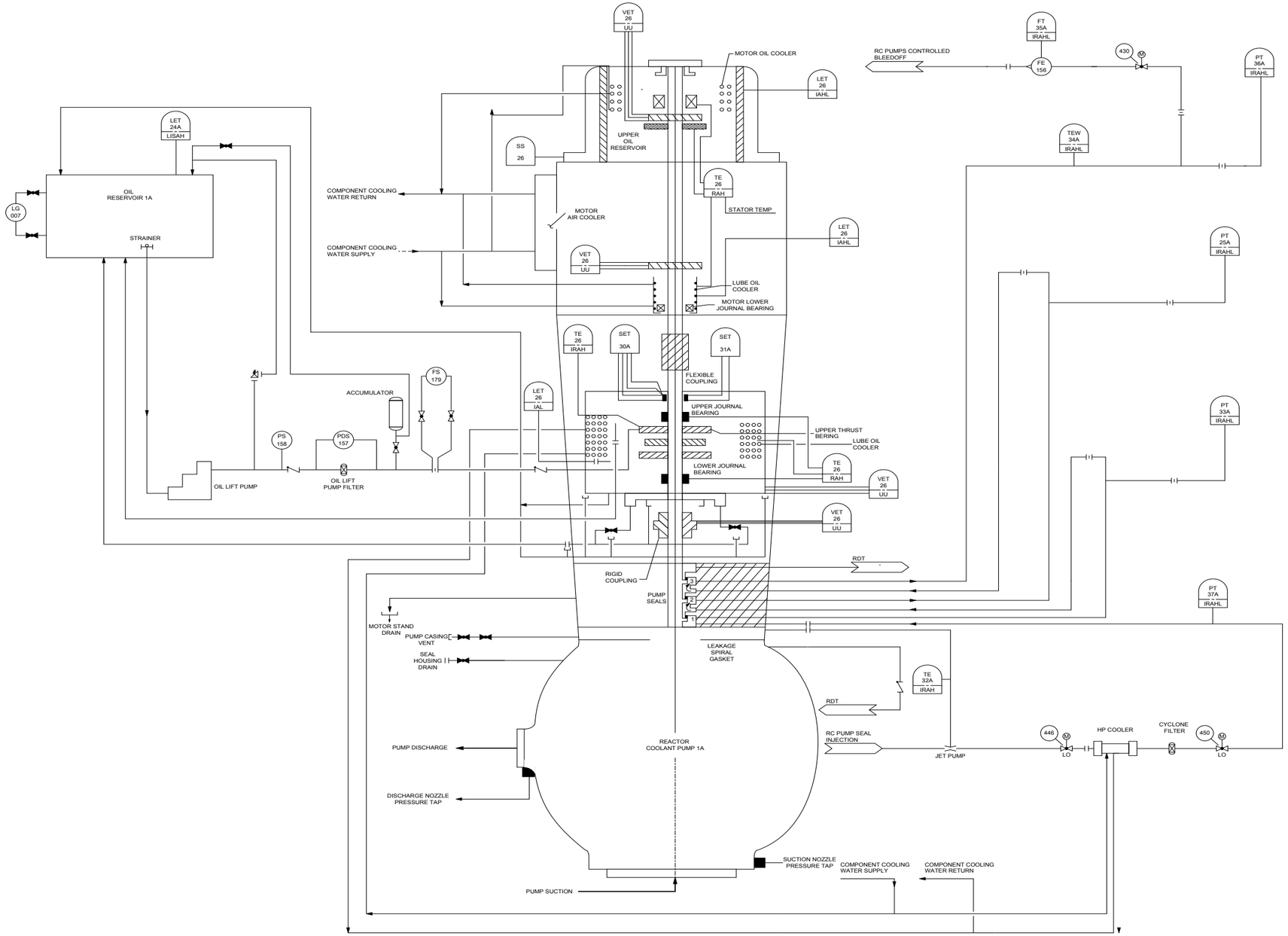

Figure 5.1.2-2 Reactor Coolant Pump P&ID

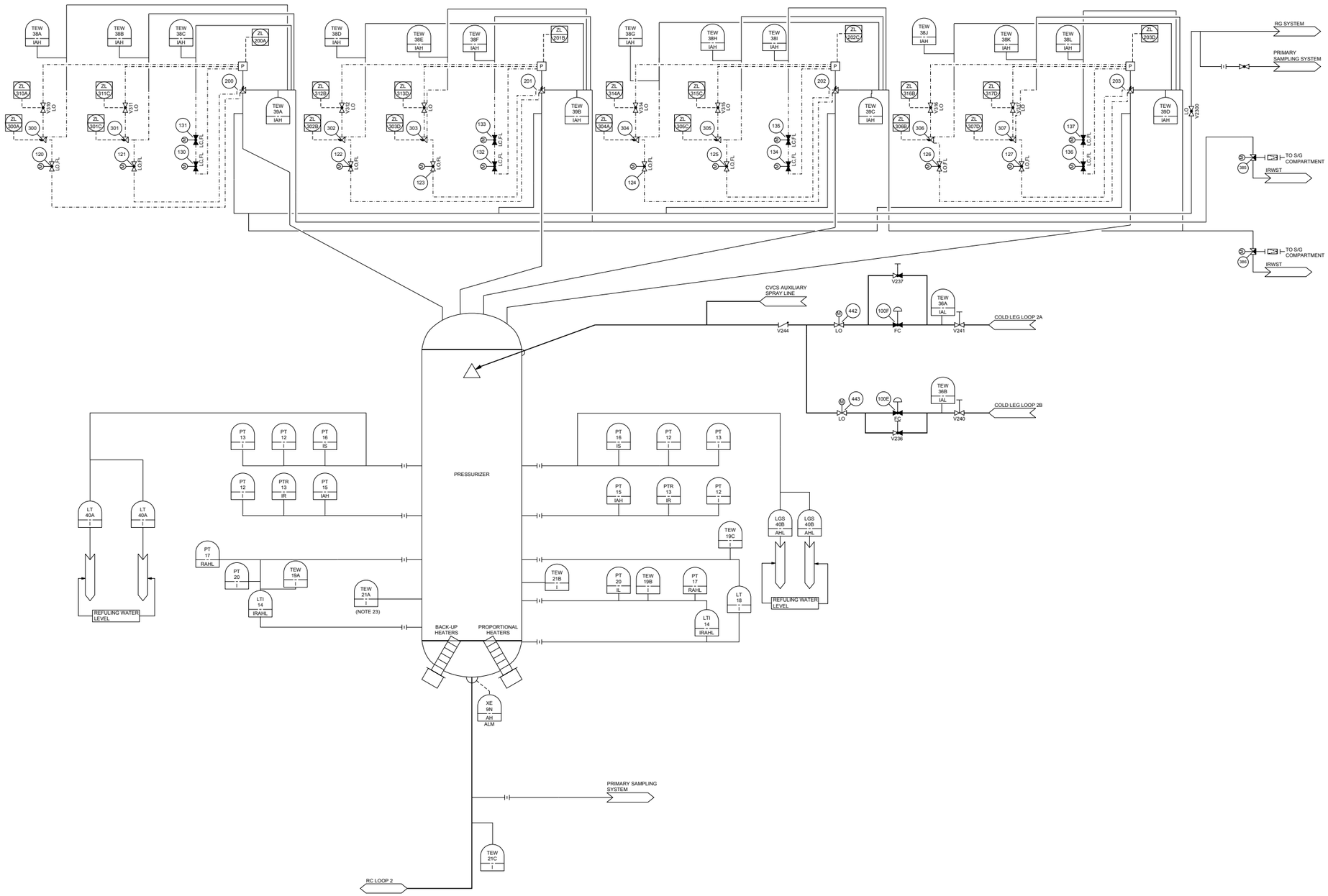

Figure 5.1.2-3 Pressurizer and POSRV P&ID

Security-Related Information – Withheld Under 10 CFR 2.390

Figure 5.1.3-1 Reactor Coolant System Arrangement Plan

Security-Related Information – Withheld Under 10 CFR 2.390

Figure 5.1.3-2 Reactor Coolant System Arrangement Elevation

5.2 Integrity of Reactor Coolant Pressure Boundary

This section describes the measures that provide and maintain the integrity of the reactor coolant pressure boundary (RCPB) throughout the facility's design life. The RCPB is defined in accordance with ANSI/ANS 51.1 (Reference 1). The RCPB includes all pressure-containing components such as pressure vessels, piping, pumps, and valves that are:

a. Part of the reactor coolant system

b. Connected to the reactor coolant system, up to and including the following:

   1) The outermost containment isolation valve in piping that penetrates the containment

   2) The second of two valves normally closed during reactor operation in piping that does not penetrate the containment

5.2.1 Compliance with Codes and Code Cases

5.2.1.1 Compliance with 10 CFR 50.55a

RCPB components are designed and fabricated as Class 1 components in accordance with ASME Section III (Reference 2), except for the components that meet the exclusion requirements of 10 CFR 50.55a(c) (Reference 3). RCPB components that meet the exclusion requirements are classified as Quality Group B in accordance with U.S. Nuclear Regulatory Commission (NRC) Regulatory Guide (RG) 1.26 (Reference 4) and are fabricated as Class 2 components in accordance with ASME Section III. The classification of RCPB components complies with the requirements of 10 CFR 50, Appendix A, General Design Criteria (GDC) 1 (Reference 5).

The components and code classes that are listed in Table 5.2-1 are in accordance with the provisions of 10 CFR 50.55a with this exception: the applicable ASME Code edition for the APR1400 is the 2007 Edition with 2008 Addenda. Table 3.2-1 provides the component classifications of pressure vessels, piping, pumps, valves, and storage tanks,

along with the applicable component codes. The proposed inspections, tests, analyses, and acceptance criteria (ITAAC), as required by 10 CFR 52.47(b)(1) (Reference 6), are addressed in Tier 1 of the APR1400 DCD based on the selection criteria in Section 14.3.

5.2.1.2 Compliance with Applicable Code Cases

Reactor coolant pressure boundary components are designed and fabricated in accordance with ASME Section III.

The applicable ASME Code cases that are in compliance with the requirements of GDC 1 and 10 CFR 50.55a and that are used in the plant design and manufacturing are listed in Table 5.2-4. NRC RGs 1.84 (Reference 7), 1.147 (Reference 8), and 1.192 (Reference 9) are used in determining the applicable ASME Code Cases. The COL applicant is to address the addition of ASME Code cases that are approved in NRC RG 1.84 (COL 5.2(1)). The COL applicant is to address the ASME Code Cases invoked for the ISI program of a specific plant (COL 5.2(2)). The COL applicant is to address the ASME Code Cases invoked for operation and maintenance activities (COL 5.2 (3)).

5.2.2 Overpressure Protection

Overpressure protection systems include all pressure-relieving devices for the following systems:

a. Reactor coolant system (RCS)

b. Primary side of auxiliary or emergency systems connected to the RCS

c. Secondary side of steam generators (SGs)

5.2.2.1 Design Bases

5.2.2.1.1 Design Bases for Overpressure Protection of the Reactor Coolant System

The functional design of the overpressure protection is in conformance with the requirements of GDC 15 and GDC 31.

Overpressurization of the RCS and steam generators is precluded by operation of the pressurizer POSRVs and main steam safety valves (MSSVs) and by the reactor protection system (RPS). Pressure relief capacity for the RCS and steam generators is conservatively sized to satisfy the overpressure requirements of ASME Section III, Division 1, NB 7000. The pressurizer POSRVs, MSSVs, and RPS are designed to maintain the RCS pressure below 110 percent of design pressure during the worst-case loss-of-load event with a delayed reactor trip. The MSSVs are sized conservatively to release steam flow equal to the full power level. Steam generator pressure is limited to less than 110 percent of steam generator design pressure during the worst-case transient.

In order to determine the appropriate pressurizer POSRV capacity, a sensitivity study was performed with the worst-case initial condition and nuclear parameters to conservatively evaluate the effect of valve capacity on the maximum RCS pressure during the design basis event. As shown in Figure 5.2.2-1, the design POSRV capacity is determined at the point where an additional increase in the capacity has a negligible effect on reducing the maximum RCS pressure during the loss-of-load transient.

At the onset of a loss-of-load transient, the reactor coolant and main steam systems are at maximum rated output plus a 2 percent uncertainty margin. No credit is taken for plant control systems such as letdown, charging, pressurizer spray, turbine bypass, reactor power cutback, and feedwater addition (main and auxiliary) after turbine trip in the loss-of-load analysis. A reactor scram is assumed to be initiated by the second safety grade signal from the RPS.

Peak reactor coolant and steam generator pressures are limited to less than 110 percent of design pressures during the worst-case transient (Figures 5.2.2-2, 5.2.2-3, and 5.2.2-4). Reasonable assurance of reliable overpressure protection is provided by the pressurizer POSRVs, the MSSVs, and the RPS.

Pressurizer sizing is described in Subsection 5.4.10.

5.2.2.1.2 Design Bases for Low Temperature Overpressure Protection

Each shutdown cooling system (SCS) suction line relief valve (SI-179 or SI-189) is designed to protect the RCS in a failure that initiates the pressure transient. The use of

either SCS suction line relief valve provides sufficient pressure relief capacity to mitigate the most limiting low temperature overpressure protection (LTOP) events during low-temperature conditions (GDC 15).

The maximum pressure for low temperature overpressure protection is limited to 43.9 kg/cm^{2}A (625 psia), 20 percent of RCS hydraulic test pressure (219.7 kg/cm^{2}A [3,125 psia]), which is the maximum RCS pressure allowed under the minimum operating temperature required in Appendix G of ASME Section III. The SCS suction line relief valves are designed in accordance with LTOP requirements (GDC 31).

The LTOP is designed in accordance with Branch Technical Position (BTP) 5-2 (Reference 10). Overpressure protection of the RCS during low-temperature conditions is provided by the relief valves, SI-179 and SI-189, located in the SCS suction lines. Subsection 5.4.7 provides a description of the SCS. The SCS is schematically shown on the SCS flow diagram (Figure 5.4.7-3), RCS P&ID (Figure 5.1.2-1) and safety injection system (SIS) flow diagram (Figure 6.3.2-1). The SCS suction line relief valves are shown in Figure 6.3.2-1 and described in Subsection 5.4.7.2.2.

Alignment of the SCS suction line relief valve to the RCS is specified by plant procedures to provide reasonable assurance of RCS overpressure protection for all temperatures below the temperature for which LTOP is required, called the LTOP temperature and designated as T_{LTOP}. Pressure-temperature (P-T) Limit curves are provided in the Pressure and Temperature Limits Report (PTLR) (Reference 11). For temperatures above the LTOP temperature, overpressure protection is provided by the pressurizer POSRVs, which is described in Subsection 5.2.2.4.1.

5.2.2.1.2.1 Design Criteria

The criteria considered in the design of the overpressure mitigating system to provide LTOP for the RCS are provided in Subsections 5.2.2.1.2.2 through 5.2.2.1.2.5.

5.2.2.1.2.2 Credit for Operator Action

No credit is taken for operator action in the limiting transient analyses described in Subsection 5.2.2.2.2.1. In the analysis, overpressure protection is provided by the SCS suction line relief valves.

5.2.2.1.2.3 Single Failure

In the LTOP mode, each SCS suction line relief valve is designed to protect the reactor vessel given a single failure in addition to the event that initiates the pressure transient. The event initiating the pressure transient is considered to result from either an operator error or equipment malfunction. The SCS suction line relief valve is independent of a loss of offsite power. Each SCS suction line relief valve is a self-actuating, spring-loaded liquid relief valve, which does not require control circuitry. The relief valve opens when the RCS pressure exceeds its setpoint.

The redundant SCS suction lines between the RCS and the SCS suction line relief valves meet the single failure criteria as described in Table 5.4.7-2. No single failure of an isolation valve or its associated interlock will prevent one relief valve from performing its intended function.

5.2.2.1.2.4 Testability

Periodic testing of the SCS LTOP relief valves and suction line isolation valves is defined in Subsections 3.4.11 and 3.4.13 in Technical Specifications (Chapter 16).

5.2.2.1.2.5 Seismic Design and IEEE Standards 308 and 603 Criteria

The SCS suction line relief valves, isolation valves, associated interlocks, and instrumentation are designed to seismic Category I requirements and are addressed in Subsections 3.2.1 and 5.4.7.2.4 and Table 3.2-1. The interlocks and instrumentation associated with the SCS suction line isolation valves are described in Subsections 5.4.7, 7.6.1, and 7.6.1.1 and Table 7.6-1. The interlocks satisfy the applicable portions of IEEE Standards 279, 308, and 603 criteria.

5.2.2.2 Design Evaluation

5.2.2.2.1 Design Evaluation for Overpressure Protection of the Reactor Coolant System

Section 15.2 provides the functional design evaluation of the overpressurization protection system. The analysis demonstrates the adequacy of the overpressure protection system to maintain secondary and primary operating pressures within their respective pressure limits. The analytical model used in the analysis is addressed in Chapter 15.

The assumptions that are used in the analysis are provided in Chapter 15. The assumptions were chosen to maximize the required pressure-relieving capacity of the primary and secondary sides. The analysis for the most severe anticipated transient demonstrates that sufficient relieving capacity is provided to prevent the pressure from exceeding 110 percent of the design pressure when acting in conjunction with the reactor protective system.

5.2.2.2.2 Design Evaluation for Low Temperature Overpressure Protection

The information in the following subsections is provided to demonstrate that the SCS suction line relief valves meet the criteria provided in Subsection 5.2.2.1.2.

5.2.2.2.2.1 Limiting Transients

Transients during the low-temperature operating mode are more severe when the RCS is operated in the water-solid condition. Addition of mass or energy to an isolated water-solid system produces increased system pressure. The severity of the pressure transients depends upon the rate and total quantity of mass or energy addition. The choice of the limiting LTOP transients is based on evaluations of the potential transients. The most limiting transients initiated by a single operator error or equipment failure are:

a. An inadvertent safety injection actuation and one charging pump operation (mass addition)

b. A start of one reactor coolant pump (RCP) when a positive temperature difference (ΔT) between the steam generator secondary-side water and the reactor coolant exists (energy addition)

The most limiting transients are determined by the conservative analyses, which maximize mass and energy additions to the RCS. In addition, the RCS is assumed to be in a water-solid condition at the time of the transient; such a condition has been noticed to exist infrequently during plant operation because the operator is instructed to avoid water-solid conditions whenever possible.

The maximum ΔT for energy addition transient is assumed to be 139 °C (250 °F), which is greater than the value allowed by Subsections 3.4.6 and 3.4.7 in Technical Specifications (Chapter 16) during the LTOP mode. However, the operational procedures direct the operator to maintain the ΔT below approximately 11.1 °C (20 °F).

The analyses demonstrate that the SCS suction line relief valve (SI-179 or SI-189) provides sufficient pressure relief capacity to mitigate the most limiting LTOP events identified above.

5.2.2.2.2.2 Provision for Overpressure Protection

The LTOP pressure is defined to be the SCS suction line relief valve setpoint pressure adjusted to provide a margin to avoid lifting and to compensate for pressure measuring inaccuracies during plant normal operation. During heatup, the RCS pressure is maintained below the LTOP pressure until the RCS cold leg temperature exceeds the LTOP disable temperature. During cooldown, the RCS pressure is maintained below the LTOP pressure once the RCS cold leg temperature reaches the LTOP enable temperature.

An LTOP enable temperature is defined in BTP 5-2, "Overpressurization Protection of Pressurized Water Reactors While Operating at Low Temperatures." The definition is based on measuring the degree of protection provided by the LTOP system against violations of the pressure-temperature limitations (P-T Limits) in terms of the RT_{NDT} of the reactor vessel beltline material at either the 1/4t or 3/4t location, depending upon which P-T Limit curve is most limiting.

Given the implicit assumptions in the P-T Limit analysis described in Subsection 5.3.2.1.2, the 3/4t location is the controlling beltline P-T Limit for heatup, and the 1/4t location is controlling for cooldown. LTOP disable temperature for heatup and LTOP enable temperature for the controlling cooldown (isothermal) is specified in the PTLR.

The RCS is protected at elevated temperatures by the pressurizer POSRVs, which have a set pressure of 173.7 kg/cm^{2}A (2,470 psia) as indicated in Table 5.4.14-1.

Whenever the SCS suction line relief valves are aligned to the RCS to provide LTOP, an increase in RCS pressure above the maximum SCS alignment pressure of 31.6 kg/cm^{2}A (450 psia) will cause an LTOP transient alarm in the main control room to alert the operator that a pressure transient is occurring. Operator actions taken in response to an LTOP transient alarm are described in Subsection 5.4.7.2.6. Either SCS suction line relief valve will terminate inadvertent pressure transients occurring while RCS temperature is below the LTOP disable temperature. For temperatures above the LTOP disable temperature specified in the PTLR for heatup, overpressure protection is provided by the pressurizer POSRVs.

During cooldown, whenever the RCS cold leg temperature is below the LTOP enable temperature specified in the PTLR, the SCS suction line relief valves provide the necessary overpressure protection. If the SCS is not aligned to the RCS before the cold leg temperature is decreased below the LTOP enable temperature, an alarm will notify the operator to open the SCS suction line isolation valves. However, the SCS cannot be aligned to the RCS until the RCS pressure is below the SCS entry pressure.

The LTOP conditions described above are within the SCS operating range. Subsection 3.4.11 in Technical Specifications (Chapter 16) requires the SCS suction line isolation valves to be open when operating in the LTOP mode. This Technical Specification also provides reasonable assurance that appropriate action is taken if one or more SCS suction line relief valves are out of service during the LTOP mode of operation.

Either SCS suction line relief valve provides sufficient relief capacity to prevent any pressure transient from exceeding the controlling P-T Limit.

5.2.2.2.2.3 Administrative Controls

Administrative controls necessary to implement the LTOP provisions are limited to controls that are necessary to open the SCS suction line isolation valves.

During cooldown, when the temperature of the RCS is above that corresponding to the intersection of the controlling P-T Limit and the pressurizer POSRV setpoint, overpressure protection is provided by the pressurizer POSRVs, and no administrative procedural controls are necessary. RCS pressure is decreased to below the LTOP pressure before entering the low temperature region for which LTOP is necessary. The LTOP pressure is equal to the maximum allowable pressure for SCS operation. Once the SCS is aligned, no further specific administrative procedural controls are needed to provide reasonable assurance of proper overpressure protection. The SCS remains aligned whenever the RCS is at low temperatures and the reactor vessel head is secured or until an adequate vent has been established. The SCS suction line isolation valve position is indicated.

During heatup, the SCS suction line isolation valves remain open at least until the LTOP disable temperature is reached. Once the RCS temperature reaches the temperature corresponding to the intersection of the controlling P-T Limit and the pressurizer POSRV setpoint, overpressure protection is provided by the pressurizer POSRVs. The SCS can be isolated, and no further actions are necessary.

5.2.2.3 Piping and Instrumentation Diagrams

The piping and instrumentation diagram, showing the pressurizer POSRVs and their discharge lines, is given in Figure 5.1.2-3. The piping and instrumentation diagram showing the in-containment refueling water storage tank (IRWST) is given in Figure 6.8-3. The main steam safety valves are discussed in Section 10.3.

The SCS suction line relief valves (SI-179 and SI-189), used to provide LTOP are addressed in Subsection 5.4.7 and shown in the SIS/SCS piping and instrumentation diagrams in Figure 6.3.2-1.

5.2.2.4 Equipment and Component Description

5.2.2.4.1 Pressurizer Pilot-Operated Safety Relief Valves

The pressurizer POSRVs are pilot-operated, forged-steel valves. These valves are mounted on the top of the pressurizer. Further description of these valves is provided in Subsection 5.4.14. A schematic drawing of the pressurizer POSRVs is given in Figure 5.4.14-1. Valve parameters are given in Table 5.4.14-1.

Open and closed indications of each POSRV are provided in accordance with the recommendations of TMI Action Plan Item II.D.3 in 10 CFR 50.34(f) (2)(xi).

5.2.2.4.1.1 Pressurizer Pilot-Operated Safety Relief Valves Operation

Four pressurizer POSRVs are connected to the top of the pressurizer by separate inlet lines. There are two main discharge lines to the IRWST. The steam from two POSRVs is discharged through one common discharge line. Each pressurizer POSRV provides the overpressure protection function with a main valve and two spring-loaded pilot valve assemblies.

Each spring-loaded pilot valve in the assembly consists of a motor-operated isolation valve, a spring-loaded pilot valve, a check valve, and a manual isolation valve. The spring-loaded pilot valve of each POSRV acts as a safety valve in the closed position during normal operation and opens automatically if the system pressure increases to the POSRV set pressure, thus opening the check valve and the main valve.

Motor-operated isolation valves are normally open but are manually closed by an operator to isolate the discharge from the POSRVs when the spring-loaded pilot valves fail to close. Manual isolation valves are normally open but are closed manually by an operator during maintenance or a setpoint test.

Each pressurizer POSRV inlet nozzle is designed to pass a maximum steam flow in consideration of the maximum pressure drop from the pressurizer to the POSRV.

5.2.2.4.1.2 Transients

The pressurizer POSRVs are designed to withstand the consequences of the design transients of Table 3.9-1 without failure or malfunction.

5.2.2.4.1.3 Environment

The pressurizer POSRVs are designed to operate in normal and accident conditions. Normal and accident environmental conditions refer to environmental categories B and A, respectively, and are addressed in Appendix 3.11A.

5.2.2.4.2 Main Steam Safety Valves

The main steam safety valves are direct acting, spring loaded, carbon steel valves. The valves are mounted on each of the main steam lines upstream of the main steam isolation valves outside the containment. The valve parameters are given in Table 5.4.14-2. Additional description of overpressure protection equipment and components for the main steam system is provided in Subsection 10.3.2.

5.2.2.4.2.1 Main Steam Safety Valve Operation

Main steam safety valve operation is characterized by a sharp opening at the set pressure. The sharp opening is produced by two stages of reactions working together to produce a continuous action. The initial lift is produced when the steam pressure under the disc exceeds the spring force. The escaping steam reacts against the upper guide ring and pushes the disc up to a high lift. The reaction of the deflected steam against the underside of the disc lifts it higher on an accumulation of pressure. The valve reaches a lift in excess of full bore lift within an accumulation of 3 percent above the set pressure. As the system pressure drops, the valve disc settles to a moderate lift and closes quickly after blowing down to a pressure within 5 percent of set pressure.

5.2.2.4.2.2 Transients

The main steam safety valves are designed to withstand the consequences of the design transients of Table 3.9-1 without failure or malfunction.

5.2.2.4.2.3 Environment

The main steam safety valves are designed to operate in the normal and accident conditions. Normal and main steam line break conditions refer to environmental categories L and M in Appendix 3.11A, respectively.

5.2.2.4.3 Shutdown Cooling System Suction Line Relief Valves (SI-179 and SI-189)

The SCS suction line relief valves that are used to provide LTOP are self-actuating, spring-loaded liquid relief valves with sufficient capacity to mitigate the most limiting overpressurization event. Control circuitry is not required because the valves open when RCS pressure exceeds the setpoint.

5.2.2.4.3.1 Shutdown Cooling System Suction Line Relief Valves (SI-179 and SI-189) Operation

The relief valves installed in the two SCS suction lines (one per train) provide LTOP for RCS when the SCS is aligned to the RCS during plant cooldown and heatup operations. The valves open linearly up to 100 percent at 110 percent pressure of the setpoint.

5.2.2.4.3.2 Transients

Transients are described in Subsection 5.2.2.2.2.1.

5.2.2.4.3.3 Environment

The SCS suction line relief valves are designed to operate in normal and accident conditions. Normal and accident environmental conditions refer to environmental categories B and A, respectively, and are addressed in Appendix 3.11A.

5.2.2.5 Mounting of Pressure-Relief Devices

5.2.2.5.1 Configuration of Pressure Relief Devices

The POSRVs and MSSVs are mounted to provide overpressure protection for the primary side and secondary side, respectively.

The design basis for the assumed loads for the primary and secondary side pressure relief devices are described in Subsection 3.9.3.

The POSRVs are shown in Figure 5.4.14-1. They discharge to the IRWST.

5.2.2.5.2 Design Bases for Mounting of Reactor Coolant Pressure Boundary Pressure Relief Devices

The RCPB pressure relief devices are mounted and installed as follows:

a. Each discharge pipe is supported to transfer transient discharge load to the pressurizer or adjacent structure in order to stay within the allowable pressurizer nozzle loads.

b. There is no rigid restraint in the vertical directions. The piping system moves up or down with the pressurizer during heat up or cool down. The weight of the piping system is carried by spring supports.

c. Each POSRV discharge piping is supported so that forces and moments during operating plant conditions (normal, upset, emergency, and faulted) will not jeopardize the integrity of the valves, the inlet lines to the valves or the nozzles on the pressurizer.

d. Pipe breaks are postulated in the high-energy piping between the pressurizer nozzle and the valve flange joint. Pipe breaks are not postulated in the POSRV discharge piping (i.e., piping from the valve discharge flange to the IRWST). This piping is not considered high-energy piping because it operates for less than 2 percent of the normal plant operating time. Discharge piping is classified as

moderate-energy piping. Through-wall cracks are not postulated because this piping is adequately separated from other safety-related active systems subject to impairment by such failures.

Dynamic analysis for seismic and valve discharge loadings are performed to verify the design of the support configuration.

5.2.2.5.3 Pressurizer Pilot-Operated Safety Relief Valve Analysis – Loading Criteria and Methods of Analysis

5.2.2.5.3.1 Loading Conditions

Loading combinations for upstream Class 1 piping is shown in Table 3.9-10.

5.2.2.5.3.2 Pressure

Pressure loading is in accordance with the applicable ASME Code. The design pressure is 175 kg/cm^{2}G (2,485 psig) for Class 1 piping and 49.21 kg/cm^{2}G (700 psig) for non-ASME Section III piping.

5.2.2.5.3.3 Weight

A weight analysis is performed on the complete piping system. Hydrotest conditions are also considered in the analysis.

5.2.2.5.3.4 Seismic

The structural response due to the loadings is analyzed as discussed in Subsection 3.7.2.

5.2.2.5.3.5 Thrust

5.2.2.5.3.5.1 Hydraulic Thrust Forces

The POSRV and connecting piping are subjected to hydraulic thrust forces that are the result of changes in direction of the fluid and change in flow rate and from different fluid

states such as vapor, liquid, and mixed vapor and liquid. The piping and valve supporting system is designed to withstand these thrust loads.

5.2.2.5.3.5.2 Structural Analysis of Thrust

The dynamic structural solution for the thrust loading is obtained using a modified predict-corrector integration technique and normal mode theory. PIPESTRESS (Reference 12) is used in the piping design (refer to Subsection 3.9.1.2.1).

RELAP5/MOD3.3 (Reference 13) is used to predict the transient flows resulting from the actuation of a POSRV. It also predicts the resulting piping loads used as dynamic forcing functions for structural design of discharge piping and its supporting components.

The computation is based on finite difference solutions by the method of characteristics. The computed transient pressure, velocity, and density are then used to calculate loads on bends and pipe runs.

5.2.2.5.4 Main Steam Safety Valve Analysis

5.2.2.5.4.1 Valve Forces and Reaction Load Paths

Two conditions are considered in the stress analysis of the safety valve installations: the dynamic effects of the safety valve opening and the steady-state flow condition reached after the valve has opened and is exhausting into the stack. During the valve opening period, dynamic forces due to the hydraulic transients in the valve are compensated by the reaction forces of the header supports through the header. When the valve has opened and the steam is exhausting into the stack, the discharge thrust is compensated by the reaction forces of the stack support structure.

5.2.2.5.4.2 Loading Conditions

Refer to Table 3.9-10 for loading combinations for piping upstream of the main steam safety valves.

5.2.2.6 Applicable Codes and Classification

The applicable codes and classifications for the overpressurization protection equipment are contained in Table 3.2-1. The applicable codes and classifications for the main steam safety valves are identified in Subsection 10.3.2.

5.2.2.7 Material Specifications

RCPB material specifications are described in Subsection 5.2.3.

5.2.2.8 Process Instrumentation

Process instrumentation for the overpressure protection equipment associated with the reactor coolant system is shown on Figure 5.1.2-3 and described in Chapter 7. Instrumentation associated with the pressurizer relief discharge is described in Subsection 6.8.3.

Open and closed indications of each POSRV are provided in accordance with the recommendations of TMI Action Plan Item II.D.3 in 10 CFR 50.34(f) (2)(xi).

The SCS suction line relief valves, isolation valves, associated interlocks, and instrumentation are addressed in Subsections 3.2.1 and 5.4.7.2.4 and Table 3.2-1. The interlocks and instrumentation associated with the SCS suction line isolation valves are addressed in Subsections 5.4.7, 7.6.1, and 7.6.1.1 and Table 7.6-1.

5.2.2.9 System Reliability

The pressurizer POSRVs are pilot-operated mechanisms and cannot fail closed if the setpoint pressure is exceeded. Reasonable assurance of the operational reliability of the pressurizer POSRVs is provided by:

a. Stringent compliance with ASME OM Code for safety valves

b. Conservative design criteria (actual pressurizer POSRV steam flow exceeds the analysis flow rate)

c. Testing and surveillance prescribed by the Technical Specifications

The main steam safety valves have active and spring-actuated mechanisms that cannot maintain a closed position when the setpoint pressure is exceeded. Reasonable assurance of the operational reliability of the main steam safety valves is provided by the same methods as the pressurizer POSRVs.

The SCS suction line relief valves (SI-179 and SI-189) are independent of a loss of offsite power. No single failure of an isolation valve or its associated interlock prevents one relief valve from performing its intended function. If the SCS suction line relief valves are not aligned to the RCS before the cold leg temperature is reduced to below the maximum RCS cold leg temperature requiring LTOP, an alarm notifies the operator to open the SCS suction line isolation valves (SI-651, -652, -653, and -654). Each SCS suction line relief valve is a self-actuating, spring-loaded liquid relief valve that does not require control circuitry. Reasonable assurance of the SCS suction line relief valves is provided by design according to ASME Section III-NC, conservative design criteria, and periodic testing of the Technical Specifications.

5.2.2.10 Testing and Inspection

Preservice testing of the pressurizer POSRVs and main steam safety valves includes testing as specified in Chapter 14. The testing and inspection requirements are in conformance with ASME OM Code and ASME Section XI including the recommendations of TMI Action Plan Item II.D.1 in 10 CFR 50.34(f)(2)(x). The tests listed below are performed for preservice and inservice testing of the pressurizer POSRVs. No separate inservice testing requirements are to be applied to the operability of the POSRV check valve because it is actuated automatically by a spring-loaded pilot valve, and the POSRV check valve operability can be verified tby testing the main valve as follows:

a. Opening setpoint verification test for the spring loaded pilot valves

b. Operability (including opening time) test for the main valves by use of the spring loaded pilot valves

c. Operability test for the motor operated isolation valves

d. Seat leak tight test for each valve

e. Operability test for the position indication of each valve

f. Closing setpoint verification test for the spring loaded pilot valves

g. Operability (including closing time) test for the main valves by utilization of the spring loaded pilot valves

Inservice inspection and testing of the main steam safety valves are governed by ASME OM Code and ASME Section XI.

Preservice and inservice testing of the SCS suction line relief valves (SI-179 and SI-189) setpoint are performed according to the ASME OM Code.

5.2.3 Reactor Coolant Pressure Boundary Materials

5.2.3.1 Material Specification

This subsection describes material issues common to the reactor coolant pressure boundary (RCPB) components. RCPB materials are fabricated in accordance with the requirements of GDC 1 and GDC 30 of 10 CFR 50, Appendix A; NRC RG 1.84; and 10 CFR 50.55a.

A list of specifications for the principal ferritic materials, austenitic stainless steels, bolting and weld materials, which are part of the RCPB, is given in Table 5.2-2. The COL applicant is to address the list of material specifications, which are not shown in Table 5.2-2, as necessary (COL 5.2(4)). The materials used in the RCPB meet the applicable material requirements of ASME Section III and conform to the applicable ASME Section II (Reference 14) material specifications or ASME Code cases permitted or approved by the NRC. The COL applicant is to address the addition of ASME Code Cases that are approved in NRC RG 1.84 (COL 5.2(1)).

Austenitic stainless steel base materials for RCPB applications are solution-heat-treated to prevent sensitization and primary water stress corrosion cracking (SCC). Alloy 600 base metal and Alloy 82/182 weld metal are not used in RCPB applications. Only alloy 690

base metal and Alloy 52/52M/152 weld metals are used for RCPB applications. Alloy 690 base metals are thermally treated to enhance their resistance to primary water stress corrosion cracking (PWSCC).

All carbon and low alloy steel materials including weld materials used within the RCPB are limited to maximum sulfur (S) content of equal to or less than 0.010 weight percent.

Studies referenced in NRC RG 1.99, Revision 02 (Reference 15), have shown that irradiation-induced mechanical property changes of SA-508 materials can depend significantly on the amount of residual elements present in the compositions (i.e., copper, nickel, phosphorous, and vanadium). Residual sulfur has also been found to affect the initial toughness of SA-508 materials. Controls are placed on the residual chemistry of RV materials and the as-deposited welds used to join these materials to limit the maximum predicted increase in the RT_{NDT}, which is described in Subsections 5.3.1.6 and 5.3.2.1.1, and to limit the extent of the RV beltline. The beltline is defined in Appendix G of 10 CFR 50 (Reference 16).

SA-508 Grade 3, Class 1 material, which is used in the RV beltline and the as-deposited welds, contains no greater than the following weight percent of residual elements:

Copper (in welds)	0.05	Phosphorous	0.012
Copper (in forgings)	0.03	Sulfur	0.010
Nickel (in forgings)	1.00	Vanadium	0.030
Nickel (in welds)	0.10		

5.2.3.2 Compatibility with Reactor Coolant

5.2.3.2.1 Reactor Coolant Chemistry

Controlled water chemistry is maintained within the RCS. RCS water chemistry is specified to minimize corrosion. RCS water chemistry specification is shown in Table 5.2-5. Water chemistry limits are determined at a level comparable to the guidelines in the Electric Power Research Institute's (EPRI's) "PWR Water Chemistry Guidelines." The COL applicant is to specify the version of EPRI's "Primary Water Chemistry Guidelines" (References 17, 18) that are to be implemented (COL 5.2(5)). Control of the

reactor coolant chemistry is a function of the chemical and volume control system (CVCS), which is addressed in Subsection 9.3.4.

The CVCS is designed to perform the following functions:

a. Maintain the chemistry including pH and purity of the reactor coolant during prestartup testing, startups, normal operation, and during shutdowns

b. Scavenge oxygen from the coolant before heat-up

c. Control radiolysis reactions involving hydrogen, oxygen, and nitrogen during normal operation

Two chemicals (hydrazine and hydrogen) are added to the reactor coolant to control dissolved oxygen (DO). Hydrazine is maintained in the reactor coolant at 1.5 times of DO concentration whenever the reactor coolant temperature is below 65.6 °C (150 °F). At power operation, DO concentration is limited by maintaining the excess dissolved hydrogen in the coolant. To minimize the effect of crud deposition on the reactor core heat transfer surfaces, lithium-7 hydroxide is added. Lithium-7 hydroxide produces pH conditions within the reactor coolant at operating temperatures that reduce the corrosion product solubility and hence the dissolved crud inventory in the circulating reactor coolant. The lithium concentration is maintained as shown in Tables 9.3.4-1B and 9.3.4-1C. Subsection 9.3.4 provides additional information on the water chemistry limits applicable to the RCS. For example, information on the control of suspended solid and demineralizer performance is described in Subsections 9.3.4.2.8.5 and 9.3.4.2.7, respectively.

A soluble zinc compound (Zn-64 < 1.0 weight percent) may be added to the reactor coolant for the purpose of radiation field reduction and mitigation of PWSCC initiation.

5.2.3.2.2 Materials of Construction Compatibility with Reactor Coolant

The construction materials used in the RCPB that are in contact with the reactor coolant are designated in Table 5.2-2. These materials are selected to minimize corrosion and have demonstrated satisfactory performance in existing operating reactor plants. The materials used for the RCPB comply with the requirements of GDC 4 of 10 CFR 50, Appendix A.

Conformance of the fabrication and processing of austenitic stainless steels with NRC RG 1.44 (Reference 19) is shown in Subsection 5.2.3.4.1. Stainless steel or nickel-chromium-iron cladding is applied for corrosion resistance to all ferritic low-alloy and carbon steel surfaces that come into contact with the reactor coolant.

The joints between the austenitic safe ends and low alloy or carbon steel nozzles are made by welding with Alloy 690 equivalent weld materials. Austenitic stainless steel and A690 base materials that are used for primary pressure-retaining applications are supplied in the solution-annealed and thermally treated condition, respectively.

Cobalt content is restricted to as low a level as practicable in metallic materials that are in contact with reactor coolant and that are in stainless steel or nickel-based alloy components with a large wetted surface area. Cobalt-based alloys are avoided except when no proven alternative exists.

Spiral wound gaskets, which contain nonmetallic material, are used for primary manways of steam generators and pressurizer. Generally, the spiral wound gasket is made of flexible graphite and Inconel X-750. Field experience shows that the gaskets have compatibility with reactor coolant.

5.2.3.2.3 Compatibility with External Insulation and Environmental Atmosphere

All metallic insulation used in the plant is stainless steel reflective, which minimizes insulation contamination in the event of chemical solution spillage. All non-metallic insulation used in the plant is designed to meet the requirements of NRC RG 1.36 (Reference 20), "Non-metallic Thermal Insulation for Austenitic Stainless Steel." Complying with the NRC RG provides reasonable assurance that non-metallic insulation is designed in a manner that minimizes the potential for stress corrosion of stainless steel due to leaching of chloride or fluoride ions onto the stainless steel surfaces.

5.2.3.3 Fabrication and Processing of Ferritic Materials

Fracture toughness requirements for reactor coolant pressure boundary components are established in accordance with ASME Section III and NRC SRP BTP 5-3 (Reference 21). Fracture toughness testing of base- weld and heat-affected zone materials are conducted in

accordance with the ASME Code. Data from these tests are available after the required testing has been performed and are examined upon request at the appropriate manufacturing facility. The reactor coolant pressure boundary also complies with the requirements of GDC 14 and 31 of 10 CFR 50, Appendix A, and 10 CFR 50, Appendix G, "Fracture Toughness Requirements."

Consideration is given to the effects of irradiation on material toughness properties in the core beltline region of the reactor vessel to provide reasonable assurance of adequate fracture toughness for the service life of the vessel. Subsection 5.3.1.6 addresses the prediction of irradiation effects and the material surveillance program.

Testing and measuring equipment for fracture toughness tests for the reactor vessel, steam generators, pressurizer, piping, and reactor coolant pumps are calibrated in accordance with ASME Section III, NB-2360.

The COL applicant is to address the actual, as-procured, fracture toughness data of the RCPB materials to the staff at a predetermined time by an appropriate method (e.g., ITAAC) (COL 5.2(6)).

Welding of ferritic materials complies with the recommendations of NRC RG 1.50 (Reference 22), "Control of Preheat Temperature for Welding of Low Alloy Steel," as described below.

Paragraph C.1. of NRC RG 1.50 implies that the qualification materials are an infinite heat sink that would instantaneously dissipate the heat input from the welding process. The qualification procedure consists of starting the welding at the minimum preheat temperature. Welding is continued until the maximum interpass temperature is reached. The test material is then permitted to cool to the minimum preheat temperature and the welding is restarted. Preheat temperatures utilized for low alloy steel are in accordance with ASME Section III Appendix D (Reference 23). Generally, the maximum interpass temperature utilized is 260 °C (500 °F). The minimum preheat temperature and maximum interpass temperature to be specified in the welding procedure specification are equal to the temperatures used during procedure qualification.

Hydrogen is removed either by maintaining preheat until post-weld heat treatment is performed or by post heating at a temperature and time sufficient to preclude the effects of hydrogen assisted cracking if post-weld heat treatment is required by ASME Code.

In the event that Paragraphs C.1., C.2., and C.3. of NRC RG 1.50 are not met, the soundness of the weld is demonstrated by an examination that meets the acceptance criteria specified in ASME Section III.

With regard to NRC RG 1.43 (Reference 24), major components are fabricated with corrosion resistant cladding on internal surfaces exposed to reactor coolant. The major portion of the material protected by cladding from exposure to reactor coolant is SA-508 Grade 3, Class 1, which is resistant to underclad cracking.

NRC RG 1.34 (Reference 25) recommends that control be applied during welding using the electroslag process. The electroslag process is not used in the fabrication of any RCPB components. Therefore, the recommendations in NRC RG 1.34 are not applicable.

The APR1400 complies with the recommendations of NRC RG 1.71 (Reference 26) for the performance qualifications of personnel welding under conditions of limited accessibility.

The nondestructive examination requirements for tubular products are specified by ASME Section III. For major components, additional testing and inspection are explained in Subsections 5.3.1.3, 5.4.1.4, 5.4.2.3, 5.4.3.4, and 5.4.10.4.

5.2.3.4 Fabrication and Processing of Austenitic Stainless Steel

5.2.3.4.1 Avoidance of Stress Corrosion Cracking of Nuclear Steam Supply System Components

Fabrication of RCPB components is consistent with the recommendations of NRC RG 1.44, as described below, except for the criterion used to demonstrate freedom from sensitization. ASTM A262 (Reference 27) Practice A or E is used to demonstrate freedom from sensitization in fabricated, unstabilized stainless steel.

a. Solution heat treatment requirements

All raw austenitic stainless steel material, both wrought and cast, used in the fabrication of the major NSSS components in the RCPB is supplied in the annealed condition as specified by the pertinent ASME Code.

Solution heat treatment is not performed on completed or partially fabricated components. Rather, the extent of chromium carbide precipitation is controlled during all stages of fabrication as described in Items b, c, and d below.

b. Material inspection program

Extensive testing on stainless steel mockups, fabricated using production techniques, has been conducted to determine the effect of various welding procedures on the susceptibility of unstabilized Type 300 series stainless steels to sensitization induced intergranular corrosion. Only the procedures and/or practices demonstrated not to produce a sensitized structure are used in the fabrication of RCPB components. ASTM A262 Practices A or E is the criterion used to determine susceptibility to intergranular corrosion. The test has shown excellent correlation with a form of localized corrosion peculiar to sensitized stainless steels. As such, ASTM A262 Practice A or E is used as a go/no-go standard for acceptability.

As a result of the above test, a relationship was established between the carbon content of Type 304 stainless steel and weld heat input. This relationship is used to avoid weld-heat-affected-zone sensitization as described in Item d below.

c. Unstabilized austenitic stainless steel

The unstabilized grades of austenitic stainless steels with carbon content of more than 0.03 percent used for components of the RCPB are Type 304 and Type 316. These materials are furnished in the solution-annealed condition. Completed or partially fabricated components are not exposed to temperatures from 427 °C (800 °F) to 816 °C (1,500 °F).

Duplex, austenitic stainless steels containing a certain quantity of delta ferrite (weld metal, cast metal, weld deposit overlay) are not considered unstabilized

because these alloys do not sensitize, meaning they do not form a continuous network of chromium-iron carbides. Alloys in this category are:

CF8M, CF8	Cast stainless steel: delta ferrite 8 percent to 30 percent, 8 percent to 20 percent for normal operating temperature above 260 °C (500 °F), 14 percent maximum for static cast stainless steel of CF8M)
Type 308, 309, 312, 316	Singly and combined stainless steel weld filler metals: delta ferrite controlled to 8FN-15FN (8FN-16FN for Type 309) with no reading below 5FN as deposited

In duplex, austenitic/ferritic alloys, chromium-iron carbides are precipitated preferentially at the ferrite/austenitic interfaces during exposure to temperatures ranging from 427 to 816 °C (800 to 1,500 °F). This precipitate morphology precludes intergranular penetrations associated with sensitized Type 300 series stainless steels exposed to oxygenated or fluoride environments.

d. Avoidance of sensitization

Exposure of unstabilized austenitic Type 300 series stainless steels to temperatures ranging from 427 to 816 °C (800 to 1,500 °F) result in carbide precipitation. The degree of carbide precipitation, or sensitization, depends on the temperature, the amount of time at that temperature, and the carbon content. Severe sensitization is defined as a continuous grain boundary chromium-iron carbide network. This condition induces susceptibility to intergranular corrosion in oxygenated aqueous environments, as well as those containing fluorides. Such a metallurgical structure rapidly fails the ASTM A262 Practice A or E Test. Discontinuous precipitates (i.e., an intermittent grain boundary carbide network) are not susceptible to intergranular corrosion in a PWR environment.

Weld-heat-affected-zone sensitized austenitic stainless steels are avoided by carefully controlling:

1) Weld heat input to less than 23.6 kJ/cm (60 kJ/in)

2) Interpass temperature to 176.7 °C (350 °F) maximum

3) Carbon content to 0.065 percent maximum

Homogeneous or localized heat treatment in the temperature range from 427 to 816 °C (800 to 1,500 °F) is prohibited for unstabilized austenitic stainless steel with a carbon content greater than 0.03 percent used in components of the RCPB. When stainless steel safe ends are required on component nozzles, fabrication techniques and sequencing require that the stainless steel piece be welded to the component after final stress relief. This is accomplished by welding an NiCrFe overlay on the end of the nozzle. Following final stress relief of the component, the stainless steel safe end is welded to the NiCrFe overlay, using NiCrFe weld filler metal.

5.2.3.4.2 Cleaning and Contamination Protection

Specific requirements for cleanliness and contamination protection are included in the equipment specifications for components fabricated with austenitic stainless steel. The provisions described below indicate the type of procedures used for NSSS components to provide contamination control during fabrication, shipment, and storage as required by NRC RG 1.37 (Reference 28).

Contamination of austenitic stainless steels of Type 300 series by compounds that can alter the physical or metallurgical structure and/or properties of the material is avoided during all stages of fabrication. Type 300 series stainless steels are not painted. Grinding is accomplished with resin or rubber-bounded aluminum oxide or silicon carbide wheels that were not previously used on materials other than austenitic alloys that could contribute to intergranular corrosion or SCC.

Outside storage of partially fabricated components is avoided and in most cases prohibited. Exceptions are made for certain components provided they are dry, completely covered with a waterproof material, and kept above ground.

Internal surfaces of completed components are cleaned to produce an item that is clean to the extent that grit, scale, corrosion products, grease oil, wax, gum, adhered or embedded

dust, or extraneous materials are not visible to the unaided eye. Substances used for cleaning include solvents (acetone or isopropyl alcohol) and inhibited water (hydrazine or tri-sodium phosphate). Water conforms to the following requirements:

Chloride (ppm)	< 0.60
Fluoride (ppm)	< 0.40
Conductivity (µS/cm)	< 5.0
pH	6.0–8.0
Visual clarity	No turbidity, oil, or sediment

To prevent halide-induced intergranular corrosion, which can occur in an aqueous environment with significant quantities of dissolved oxygen, flushing water is inhibited by adding hydrazine or trisodium phosphate. Tests have shown these inhibitors to be effective. Operational chemistry specifications restrict concentrations of halide and oxygen, both precursors of intergranular attacks (refer to Subsection 9.3.4).

5.2.3.4.3 Characteristics and Mechanical Properties of Cold-Worked Austenitic Stainless Steels for RCPB Components

Cold-worked austenitic stainless steel is not used for components of the RCPB. The COL applicant is to submit the actual, as-procured yield strength of the austenitic stainless steel materials used in RCPB to the staff at a predetermined time agreed-upon by the regulatory body (COL 5.2(7)).

5.2.3.4.4 Control of Welding

NSSS components are designed as follows:

a. NRC RG 1.31 (Reference 29)

In order to preclude microfissuring in austenitic stainless steel welds, RCPB components are consistent with the recommendations of NRC RG 1.31 as follows:

The delta ferrite content of each lot and/or heat of weld filler metal used for welding of austenitic stainless steel code components is determined for each

process to be used in production. Delta ferrite of consumable inserts, electrodes, rod, or wire filler metal used with the gas tungsten arc welding process, and deposits made with the plasma arc welding process may be determined by either of the alternative methods of magnetic measurement or chemical analysis described in ASME Section III.

Delta ferrite content is verified for all other processes by tests using the magnetic measurement method on undiluted weld deposits described by ASME Section III. The average ferrite content shall meet the acceptance limits of 8FN to 15FN (8FN to 16FN for Type 309) with no reading below 5FN.

b. NRC RG 1.34

NRC RG 1.34 is addressed in Subsection 5.2.3.3.

c. NRC RG 1.71

NRC RG 1.71 is addressed in Subsection 5.2.3.3.

5.2.3.4.5 Toughness of Cast Austenitic Stainless Steels or Welds

Reasonable assurance of the fracture toughness of cast stainless steels is provided by limiting the delta ferrite in the materials as follows:

a. For normal operating temperatures less than or equal to 260 °C (500 °F): 8 percent to 30 percent

b. For normal operating temperatures above 260 °C (500 °F): 8 percent to 20 percent

c. Static cast stainless steel of CF8: 14 percent maximum

Reasonable assurance of the fracture toughness of stainless steel welds is provided by limiting the delta ferrite in the weld materials as follows:

a. Singly and combined stainless steel weld filler metals: 8FN-15FN (8FN-16FN for Type 309) with no reading below 5FN as deposited.

5.2.3.4.6 Nondestructive Examination

Nondestructive examinations of austenitic stainless steel tubular products for components of RCPB are carried out in accordance with ASME Section III, Subsection NB-2500, under their construction, and Section XI (Reference 30) during inservice inspections. Additional testing and inspection for major components are explained in Subsections 5.3.1.3, 5.4.1.4, 5.4.2.3, 5.4.3.4, and 5.4.10.4.

5.2.3.5 Prevention of Primary Water Stress-Corrosion Cracking for Nickel-Base Alloys

Thermally treated Alloy 690 (690TT) and Alloys 52/52M and 152 weld metals are used for the APR1400 design, which have performed well against PWSCC in field operations and laboratory experiments. Alloy 600 and Alloys 82/182 are not used. The resistance of Alloy 690, 52/52M, and 152 to PWSCC in pressurized water reactors is described in EPRI Report MRP-111, "Resistance to Primary Water Stress Corrosion Cracking of Alloys 690, 52, and 152 in Pressurized Water Reactors" (Reference 31). As of April 2012, there were no reports of the cracking of Alloy 690 base and weld metals. A boric acid corrosion (BAC) prevention program or an ISI program is applied to provide reasonable assurance of the integrity of 690TT base and weld metals.

5.2.3.6 Threaded Fasteners

Pressure-retaining threaded fasteners used for RCPB components are fabricated in accordance with ASME Section III, Subsection NB. A description of the design of threaded fasteners except for the reactor vessel stud bolts and nuts is provided in Section 3.13.

The stud bolting material of the APR1400 reactor vessel satisfies NRC RG 1.65 (Reference 32). Nondestructive examination of the stud bolting material is performed according to NB-2580 of ASME Section III. Other mechanical tests such as tensile and

Charpy V-notch (CVN) impact tests are performed for the threaded fastener materials. More information is described in Subsection 5.3.1.7.

Threaded fasteners for the other pressure retaining parts of Class 1 components are made of SA-540 Grade B24, SA-193 Grade B7, or SA-194 Grade 4 or 7 low-alloy steel bolting materials. SB-637 N07718 precipitation hardening nickel-based alloy bolting is also used for pressure retaining parts of Class 1 components. CVN tests are performed to confirm that the materials comply with ASME Section III NB-2330 fracture toughness requirements, if required by the Code. Actual fracture toughness test results are provided to the NRC staff at a predetermined time.

5.2.4 Inservice Inspection and Testing of Reactor Coolant Pressure Boundary

5.2.4.1 Inservice Inspection and Testing Program

The inservice inspection (ISI) and testing program for quality Group A components of the RCPB (ASME Section III, Class 1 components) complies with the guidelines of 10 CFR 50.55a and GDC 32 of 10 CFR 50, Appendix A. The program reflects the principles and intent of ASME Section XI and OM Code (Reference 33). The purpose of the inservice inspection program is to periodically monitor the systems or components requiring inservice inspection in order to identify the systems or components that do not meet acceptance standards and to make the necessary repairs.

The COL applicant is to prepare the inservice inspection and testing program. The COL applicant is to provide and develop the implementation milestone of the inservice inspection and testing program for the RCPB, in accordance with ASME Section XI and 10 CFR 50.55a (COL 5.2(8)).

The ISI and inservice testing (IST) programs consist of the following three subprograms:

a. The component inspection program, which includes nondestructive inspection of major components, piping system and support system

b. The pump and valve inservice testing program, which requires operability testing of selected pumps and valves

c. The hydrostatic testing program

The NSSS design provides reasonable assurance that the reactor coolant pressure boundary has an accessibility to perform the preservice and inservice inspections. The pump and valve inservice testing is described in Subsections 3.9.6.2 and 3.9.6.3.

5.2.4.1.1 System Boundary Subject to Inspection

The reactor pressure vessel, pressurizer, primary side of the steam generator and associated piping, pumps, valves, bolting, and component supports are subjected to inspection.

The high-energy system piping between containment isolation valves receives an augmented ISI as described in Subsection 6.6.8.

5.2.4.1.2 Arrangement of Systems and Components to Provide Accessibility

Accessibility to equipment for maintenance, testing, and inspection is a basic element of the APR1400 design process. The layout and arrangement of the plant provide adequate working space and access for inspection and for repair and maintenance of specific areas of Class 1 components of the RCPB in accordance with ASME Section XI IWA 1500. All Class 1 components shall be designed for and provided with access to enable the performance of ASME Section XI inspections in the installed conditions. Systems and components are designed so that design, materials, and geometry do not restrict inspections required by ASME Section XI.

The COL applicant is to address the accessibility of Class 1 components for ISI if the design of the APR1400 Class 1 component is changed from the DCD design (COL 5.2 (9)).

The provisions for access for examination of the RCPB are as follows:

a. Reactor vessel and closure head

1) From inside the vessel:

All internals of the reactor vessel, which is an open structure offering insignificant impediment to access, are removable making the entire inner surface of the vessel, including the beltline welds and the weld zones of the internal load-carrying structure attachments, available for the required surface and volumetric inspections. Provisions are made in the plant design to allow for the removal and storage of all vessel internals (except the flow skirt) during inservice inspection. The surveillance capsules assemblies are located to allow a 100 percent ultrasonic testing for reactor vessel circumferential welds. For interim inspections of the vessel, nozzle-to-shell welds and inner radii of the outlet nozzles are accessible from inside the reactor vessel by using remote automated equipment without removal of the vessel internals.

2) From outside the vessel:

The bottom head of the reactor vessel is manually examined from the outside surface and an access tunnel is provided to allow personnel into the area below the bottom head. Insulation is provided by removable panels over the bottom head weld seams.

3) Closure head

The closure head is available for inspection when it is removed and its removal makes available the vessel closure flange, upper shell-to-intermediate shell weld, closure stud holes and ligaments, and closure studs and nuts. Each control element drive mechanism is removable as a unit through a closure at the top of its housing. Because many of the reactor vessel closure head examinations are conducted from the underside of the head, the head laydown area provides access for personnel to work under this component.

b. Reactor coolant piping

Biological shielding around the reactor coolant piping in the area of the reactor vessel is designed to afford access to the circumferential and longitudinal welds, as well as the transition piece-to-nozzle welds. The volumetric examinations are performed using ultrasonic techniques.

All reactor coolant piping, as well as major components, excluding the reactor vessel, is provided with removable insulation in the areas of all welds and adjacent base metal requiring examination.

The primary coolant piping has access at each side of the welds to facilitate manual examination of the welds.

c. Steam generators

Sufficient space is provided within the stay cylinder to permit inspection of the welds. A 305 × 406 mm (12 × 16 in) access opening in the steam generator support skirt is provided. The insulation in this area is removable through the support skirt opening.

The steam generators have removable insulation and access at welds requiring examination. Manways are provided for internal steam generator inspections. Accessibility is considered to enable the ultrasonic examination for the vessel transition welds of the steam generator.

d. Pressurizer

The pressurizer has sufficient clearance around the shell weld seams for manual ultrasonic examination of these welds. The insulation is removable at each weld and access is provided for ultrasonic and visual examinations in the area of the bottom head and its nozzle penetrations of the pressurizer. A manway is provided for internal inspections of the pressurizer.

e. Reactor coolant pumps

The reactor coolant pumps require inside visual examination. To allow this, provisions are made in the design for the removal and storage of the RCP motors and the disassembly of the reactor coolant pumps. Access is provided to the motor flywheels for ultrasonic examination.

f. Other components

All other components, including portions of the steam generators, reactor coolant pumps, pressurizer, and primary piping, are accessible for manual examination from the outside surface.

General provisions are made for removable insulation, removable shielding, installation of handling machinery, adequate personnel, and equipment access space, and laydown space for all temporarily removed or serviced components. Storage space for the removable insulation panels is also provided. Working room for personnel is provided adjacent to each weld in order to examine all piping system welds manually.

5.2.4.1.3 Examination Categories and Methods

Examinations include liquid penetrant, magnetic particle, or eddy current techniques when surface examination is specified; ultrasonic or radiographic techniques when volumetric examination is specified; and visual inspection techniques that are used to determine surface condition of components and for evidence of leakage. Specific techniques, procedures and equipment, including any special techniques or equipment are in accordance with the requirements of ASME Section XI and are defined in the inservice inspection program. Preservice inspection (PSI) and subsequent inservice inspection are conducted with equivalent equipment and techniques.

The visual, surface, and volumetric examination techniques and procedures agree with the requirements of Subarticle IWA-2200, IWB-2000, and Table IWB-2500-1 of ASME Section XI. The methods, procedures, and requirements for qualification of personnel performing ultrasonic examination are in accordance with the requirements of ASME

Section XI, Appendix VII. The performance demonstration for ultrasonic examination procedure, equipment, and personnel used to detect and size flaws is in accordance with the requirements of ASME Section XI, Appendix VIII.

The data from the various baseline examinations, collected in accordance with the related procedures, are entered into a report with tabulated results. The report describes the scope of the inspection, the procedures utilized, the equipment utilized, names and qualifications of personnel, and all the examination results including all instrument calibration criteria in sufficient detail to provide reasonable assurance of repeatability for each examination. The categories and requirements appropriate for each examination area follow the categories and requirements specified in Table IWB 2500-1 of ASME Section XI. An inservice inspection program that includes the examination categories is provided in accordance with ASME Section XI, IWB 2000.

The methods, procedures, and requirements for ultrasonic examination of RV welds are qualified by performance demonstration in accordance with the requirements of ASME Section XI, Appendix VIII.

5.2.4.1.4 Inspection Intervals

The examination program for the 10-year inspection interval is defined in the ISI plan. The inspection period may be reduced or extended by as much as 1 year to enable an inspection to coincide with a plant outage. The ISI plan for all Class 1 systems and components is in accordance with ASME Section XI, IWA 2400 and IWB 2400.

5.2.4.1.5 Evaluation of Examination Results

Evaluation of examination results for Class 1 components is conducted in accordance with IWA 3000 and IWB 3000 of ASME Section XI. Unacceptable indications are repaired in accordance with the requirements of IWA 4000 of ASME Section XI. Criteria for establishing need for repair or replacement are in accordance with IWB 3000 of ASME Section XI.

5.2.4.1.6 System Pressure Tests

The leakage and hydrostatic pressure tests of the RCPB Code Class 1 components are conducted in accordance with the requirements of IWA 5000 and IWB 5000 of ASME Section XI and the Technical Specification. The requirements in the Technical Specifications (Chapter 16) on operating limits during heatup, cooldown, and system hydrostatic pressure testing are used for these tests.

5.2.4.1.7 Code Exemptions

The COL applicant is to provide a list of ASME Section XI Code exemptions in the ISI program of the specific plants, if it exists (COL 5.2(10)).

5.2.4.1.8 Relief from ASME Code Requirements

The COL applicant is to prepare and provide any requests for relief from the ASME Code requirements that are impracticable as a result of limitations of component design, geometry, or materials of construction for specific plants, if necessary. The request is to contain the information on applicable ASME Code requirements, alternative ISI methods, and justification (COL 5.2(11)).

5.2.4.1.9 Code Cases

The COL applicant may invoke ASME Code Cases listed in NRC RG 1.147 for the ISI program (COL 5.2(12)).

5.2.4.1.10 Other Inspection Program

The COL applicant is to prepare and implement a boric acid corrosion (BAC) prevention program compliant with Generic Letter 88-05 (Reference 34)(COL 5.2(13)). The BAC program includes the selection of locations of degradation caused by small leakage, identification of small leakage locations, implementation methods of inspection and evaluation, and corrective action procedures for preventing recurrences of leakage.

5.2.4.2 Preservice Inspection and Testing Program

The preservice examination program is in accordance with the requirements of Article NB-5280 of ASME Section III, Division I. The preservice inspection (PSI) program complies with the edition and addenda of ASME Section XI, as required by 10 CFR 50.55a(b). ASME Code cases listed in NRC RG 1.147 that are incorporated by reference in 10 CFR 50.55a(b) are incorporated into the program as necessary.

The PSI program provides detailed information on areas subject to examination as well as methods, acceptance criteria, and extent of preservice examinations.

The COL applicant is to prepare the preservice inspection and testing program (COL 5.2(14)).

5.2.5 Reactor Coolant Pressure Boundary Leakage Detection

The reactor coolant pressure boundary (RCPB) leakage detection systems provide a means for detecting and, to the extent practical, identifying the source of reactor coolant leakage and monitoring leaks from the reactor coolant and associated systems.

The RCPB leakage detection systems are designed in accordance with NRC RG 1.29 (Reference 35), "Seismic Design Classification," to identify the seismic classifications for the leakage detection systems (GDC 2).

The RCPB leakage detection systems conform to the guidance of NRC RG 1.45 (Reference 36), "Guidance on Monitoring and Responding to Reactor Coolant System Leakage," regarding the detection, monitoring, quantifying, and identification of reactor coolant leakage (GDC 30).

5.2.5.1 Leakage Detection Methods

5.2.5.1.1 Unidentified Leakage

Indications of unidentified coolant leakage into the containment are provided by a containment sump level and flow monitor, an airborne particulate radioactivity monitor and an atmosphere humidity monitoring system.

In normal operation, these monitors show a background level that is indicative of the normal level of unidentified leakage inside the containment. Variations in airborne radioactivity or specific humidity above the normal level signify an increase in unidentified leakage rates and signal to the plant operators that corrective action may be required. Similarly, increases in containment sump level signify an increase in unidentified leakage.

The sensitivity and response time of leakage detection equipment for unidentified leakage is such that a change in leakage rate, or its equivalent, of 1.89 L/min (0.5 gpm) can be detected in less than 1 hour.

The methods used to detect leakage to the containment from unidentified sources are:

a. Containment sump level

b. Containment airborne particulate radioactivity

c. Containment atmosphere humidity

Additionally, temperature and pressure monitoring of the containment atmosphere are used for alarms and indirect indication of leakage to the containment. They do not quantify the reactor coolant leakage.

5.2.5.1.1.1 Inventory Methods

Total leakage from the reactor coolant system can be determined by net level changes in the pressurizer and volume control tank over a measured period since the RCS and the chemical and volume control system represent a closed-loop system. Since the letdown

flow and the reactor coolant pump seal controlled bleed off flow are collected and recycled back into the RCS by the CVCS, the net inventory in the RCS and CVCS under normal operating conditions is constant. Transient changes in letdown flow rate or RCS inventory are accommodated by changes in the volume control tank level. By monitoring reactor drain tank and equipment drain tank level changes within a given test period, the identified RCS leakage value can be determined. Subtracting the identified leakage value from the total leakage value (corrected for any RCS contraction) results in the RCS unidentified leak rate.

Makeup flow rate also provides a means of detecting leakage from the RCS through measurement of the net amount of makeup flow to the system. The net makeup to the system under no-leakage steady-state conditions is zero. The net makeup flow rate and the total makeup flow rate from the CVCS are continuously monitored and recorded. Analysis of the total makeup flow rate over a period of steady-state operation can determine the abnormal leakage. An increasing trend in the amount of required makeup indicates that the abnormal leakage exists and is increasing in rate. Sudden leakage induces a step increase in the amount of makeup, which does not decrease again. Sudden leakage would be the case in a purely transient condition.

5.2.5.1.1.2 Sump Level and Flow Method

Unidentified liquid leakages are routed to the containment drain sump, or incore instrumentation (ICI) cavity sump. The containment drain sump collects unidentified leakage from the containment floor drain piping. The ICI cavity sump collects unidentified leakage in the reactor cavity. Sump levels are monitored in the MCR and alarmed on high level. Additionally, the amount of leakage is calculated using the frequency and length of time the sump pumps operate. This system is addressed in NRC RG 1.45.

A change in leak rate greater than or equal to 1.89 L/min (0.5 gpm) is detectable within 1 hour, with an alarm actuating in the MCR to alert the operators, consistent with Regulatory Positions 2.2 and 3.3 of NRC RG 1.45.

The sump level monitoring system is qualified for a safe shutdown earthquake.

5.2.5.1.1.3 Containment Air Particulate Radioactivity Monitoring

Two containment air radiation monitors are installed in parallel to measure the unidentified RCPB leakage, as described in Subsection 11.5.2.2 and listed in Table 11.5-1. One of the two containment air radiation monitors takes continuous containment air samples and measures the particulate. High radiation alarms are displayed in the MCR as shown in Figure 11.5-1. Leakage of reactor coolant has the effect of increasing radioactive particles in the containment, thus an increase of radiation level is an indication of leakage. Radiological monitoring is addressed in more detail in Section 11.5.

The airborne particulate radiation monitors can detect a 1.89 L/min (0.5 gpm) leakage rate within 1 hour at full power operation. The sensitivity of the containment atmosphere radiation monitors is sufficient for detection of the limiting leakage.

The containment air radiation monitor is capable of functioning when subjected to a safe shutdown earthquake (SSE).

5.2.5.1.1.4 Other Methods

Consistent with NRC RG 1.45 Position 2.3, containment pressure, temperature, humidity monitoring, and an acoustic leak monitoring system (ALMS) are used as indirect indications of RCS leakage to the containment. Containment air pressure is continuously monitored and is indicated and alarmed in the main control room. The pressure is measured by independent pressure transmitters located at widely separated points within the containment. Refer to Section 7.5 for information on the display instrumentation associated with containment pressure. Temperature sensors are positioned at appropriate locations throughout the containment. Containment temperature is displayed in the MCR, along with high-temperature alarms. Finally, containment humidity sensors are also provided in the MCR with displays and high alarms.

The ALMS is described in Subsection 7.7.1.5. The ALMS monitors changes in acoustic levels above a normal background with no leakage. There are 19 locations selected based on the criticality of the component or region and in some cases where leakage has occurred. The indication is qualitative; it alerts operators to investigate and compare with other leakage monitoring methods.

5.2.5.1.2 Identified Leakage

Identified leakage is defined in accordance with the guidance of NRC RG 1.45 as follows: (1) leakage (such as pump seal or valve packing leakage) that is captured, flow-metered, and conducted to a sump, collecting tank, or collection system and (2) leakage into the containment atmosphere from a known source, which does not interfere with the operation of unidentified leakage monitoring systems and is not attributable to leakage in the RCPB.

The amount of identified leakage from the RCS can be determined by adding up the amounts from all identified paths described below. Indication and alarms associated with all of the identified leakage paths are provided in the MCR.

5.2.5.1.2.1 Pressurizer Pilot-Operated Safety Relief Valves

The pressurizer POSRVs, located at the top of the pressurizer, are routed to the IRWST. Valve leakage is monitored by resistance temperature detectors (RTDs) located on the discharge lines of each pressurizer POSRV and pilot valves. An abnormally high temperature in the discharge lines of the pressurizer POSRV and the pilot valves is an indication of valve leakage. A high temperature due to leakage is alarmed in the MCR. Position indication for each pressurizer POSRV is also provided in the MCR.

5.2.5.1.2.2 Reactor Coolant Pump Seals

Instrumentation is provided to detect abnormal seal leakage. The reactor coolant pumps are equipped with two-stage seals plus a vapor or backup seal as described in Subsection 5.4.1.2. During normal operation, the RCS pressure is decreased through the two seals to controlled bleed-off pressure.

The vapor or backup seal prevents leakage to the containment atmosphere and operates at sufficient pressure to direct the controlled bleed off to the volume control tank (VCT). The vapor or backup seal is designed to withstand the full RCS pressure in the event the two primary seals fail. The vapor seal pressure indicator would show a decrease in pressure upon a significant leak into the containment across the vapor seal and an increased level in the reactor drain tank (RDT) would be indicated. Seal leakage through the tubes of the reactor coolant pump seal coolers to the component cooling water system (CCWS)

would be indicated by an increase in temperature of the component cooling water return line from the reactor coolant pumps, by an increased water level in component cooling water surge tanks, and by increased radiation monitor readings in the CCWS.

5.2.5.1.2.3 Valves

Valves inside the containment that isolate the RCS from connecting systems during normal operation are equipped with stem leakoffs at the stem packing. These leakoffs are connected by piping to the RDT. Valves in the charging and letdown system inside the containment are equipped with stem leakoffs.

5.2.5.1.2.4 Reactor Vessel Head Flange Leakage

Leakage between the two metal O-rings that seal the reactor vessel head flange is routed through a leakoff line to the RDT. A normally closed, remotely activated isolation valve and a pressure indicator are installed in the leakoff line. Leakage from the reactor vessel head flange will cause pressure in this leakoff line to rise. The pressure in the leakoff line is continuously monitored to detect the presence of a leak. Any leakage is bled off to the RDT by opening the isolation valve.

5.2.5.1.2.5 Leakage through Steam Generator Tubes or Tubesheet

N-16 radiation monitors are installed on each main steam line to reveal reactor coolant leakage through the steam generator tubes to the secondary side. An increase in radioactivity, as indicated by the condenser vacuum vent effluent monitor, and steam generator blowdown monitors will reveal reactor coolant leakage through steam generator tubes to the secondary side. Routine analysis of steam generator secondary water samples will also indicate leakage of reactor coolant into the secondary system. Appendix 11B describes in detail the methods used for primary-to-secondary leakage detection.

5.2.5.1.2.6 Leakage to Auxiliary Systems

Chapter 11 describes the design basis for process monitors used in all potentially contaminated auxiliary systems and their sensitivity.

5.2.5.2 Leakage Instrumentation in the Main Control Room

5.2.5.2.1 Pilot-Operated Safety Relief Valve

Indication of POSRV leakage is provided by the temperature instruments mounted on the POSRV discharge pipes and drain lines. The signal from the temperature sensor is continuously monitored and provides an alarm in the main control room via the information processing system (IPS) and qualified indication and alarm system (QIAS) displays.

5.2.5.2.2 Primary Indicators of Reactor Coolant Unidentified Leakage

The MCR indication of leakage from the RCS to the containment building is provided by indications and alarms. The primary indications of reactor coolant leakage are:

a. Containment air radiation indications as well as alarms that are initiated by abnormally high air particulate and radioactive gas levels in the containment atmosphere

b. Pumped flow from containment drain sump tank and reactor cavity sump

c. Levels of containment drain sump and reactor cavity sump

d. Acoustic leakage monitoring

5.2.5.2.3 Other Indicators of Reactor Coolant Leakage

Other main control room instrumentation that may indicate significant reactor coolant leakage includes:

a. Pressurizer level

b. Containment pressure, temperature, and humidity

c. Condenser vacuum vent radiation

d. Steam generator blowdown radiation

e. CVCS makeup system flow

f. Component cooling water radiation

g. RDT level, temperature, and pressure

h. Equipment drain tank pressure, temperature and level

i. VCT level

j. Reactor vessel O-ring leak-off pressure

k. Safety injection tank pressure and level

l. Safety injection line pressure

m. Pressurizer POSRV discharge temperature

n. Pressurizer POSRV position

o. Reactor coolant gas vent system pressure and temperature

p. Main steam line N-16

5.2.5.2.4 Leakage Conversion to Equivalent

Procedures for converting the instrument output to a leakage rate, in accordance with NRC RG 1.45, are available to the operators as described in the following subsections.

5.2.5.2.4.1 Containment Radioactive Air Particulate Monitoring

Upon actuation of a high activity alarm, the operator or computer performs the appropriate action. It may not be appropriate to estimate the RCS activity level based on particulate

activity because the radioactivity value could vary as a result of operating conditions. Therefore, when the high-radiation alarms are occurred or the indication values have increased, a RCS inventory balance is performed and the quantitative measurement of the coolant unidentified leakage is performed. The measurement methods are described in Subsections 5.2.5.1.1.3.

5.2.5.2.4.2 Leakage to Containment Sumps

A computer is programmed to calculate leakage rates from the rate of change of sump level. Digital readouts are available to the operator.

A computer is also programmed to calculate leakage rates utilizing the frequency and interval of time the sump pumps operate in combination with the known pumping rate of the pumps. Digital readouts are available to the operator.

5.2.5.3 Maximum Allowable Total Leakage

The maximum allowable identified and unidentified leakage and the required instrument availability to detect leakage are stated in the Technical Specifications (Chapter 16).

5.2.5.4 Intersystem Leakage

5.2.5.4.1 Safety Injection System

The SIS is isolated from the RCS during normal operation. Leakage from the RCS to the SIS under normal operation is detected by SIS pressure increases and alarmed. For example, leakage into the safety injection tanks (SITs) by the two check valves isolating the tanks from the RCS is detected by an increase in pressure between the check valves. This pressure is indicated and alarmed in the MCR. Secondarily, the SIT level increases. The leakage rate is computed from the rate of change of the level.

5.2.5.4.2 Steam Generator Leakage

The detection of leakage across the steam generator boundary between the primary to secondary side is addressed in Subsection 5.2.5.1.2.5. Leakage across this boundary

would be quantified, after the indication of radioactivity in the N-16 radiation monitors and the condenser vacuum vent effluent radiation monitor, by performing an RCS inventory balance. If the amount of leakage is small, chemical and radioisotope analyses of both the primary and secondary sides may be necessary to determine the leakage rate. Appendix 11B describes the methods that are used to detect primary-to-secondary leakage.

5.2.5.4.3 Shutdown Cooling System

The SCS is a closed system. Leakage from the RCS to SCS under normal operation, when the system is isolated from the RCS, would be detected by relief valve discharges.

5.2.5.4.4 Component Cooling Water System

The CCWS cools the reactor coolant pumps (RCPs), the SCS heat exchanger, the letdown heat exchanger, and the containment spray pump and SCS pump miniflow heat exchangers. Leakage from the RCS to the CCWS is detected by the CCW radiation monitors and/or the CCW surge tank level. The change in surge tank level is utilized to quantify any leakage.

5.2.5.5 Sensitivity and Response Time

For unidentified leakage, the leakage detecting system is designed to detect a minimum of 1.89 L/min (0.5 gpm) in 1 hour. The sensitivity and response times meet Regulatory Positions 2.1 and 2.2 of NRC RG 1.45.

5.2.5.6 Operability Testing and Calibration

Leakage monitoring systems have provisions to permit calibration and testing during plant operation, as appropriate. Periodic testing of leakage detection systems is conducted to verify the operability and sensitivity of detection equipment. These tests include installation calibrations and alignments, periodic channel calibrations, functional tests, and channel checks.

Periodic inspection of the floor drainage system to the containment sump is conducted to check for blockage and provide reasonable assurance of unobstructed pathways.

The containment humidity monitoring is also tested periodically to provide reasonable assurance of proper operation and verify sensitivity.

An inservice inspection (ISI) program for the examination of RCPB components and supports to periodically monitor the systems or components is described in Subsection 5.2.4.

5.2.5.7 Limits for Reactor Coolant Leakage Rates within the RCPB

The limiting conditions for identified, unidentified, RCPB, and intersystem reactor coolant leakages are identified in the Technical Specifications (Chapter 16). Subsections 3.4.12 and 3.4.13 of the Technical Specifications address RCS operational leakage and RCS pressure isolation valve, respectively. Subsection 3.4.14 addresses RCS leakage detection instrument requirements.

5.2.6 Combined License Information

COL 5.2(1) The COL applicant is to address the addition of ASME Code cases that are approved in NRC RG 1.84.

COL 5.2(2) The COL applicant is to address the ASME Code cases invoked for the ISI program of a specific plant.

COL 5.2(3) The COL applicant is to address the Code Cases invoked for operation and maintenance activities.

COL 5.2(4) The COL applicant is to address the material specifications, which are not shown in Table 5.2-2, as necessary.

COL 5.2(5) The COL applicant is to specify the version of EPRI's, "Primary Water Chemistry Guidelines," that will be implemented.

COL 5.2(6) The COL applicant is to address the actual, as-procured, fracture toughness data of the RCPB materials to the staff at a predetermined time by an appropriate method.

COL 5.2(7) The COL applicant is to submit the actual, as-procured yield strength of the austenitic stainless steel materials used in RCPB to the staff at a predetermined time agreed-upon by the regulatory body.

COL 5.2(8) The COL applicant is to provide and develop the implementation milestone of the inservice inspection and testing program for the RCPB, in accordance with ASME Section XI and 10 CFR 50.55a.

COL 5.2(9) The COL applicant is to address the provisions to accessibility of Class 1 components for ISI if the design of the APR1400 Class 1 component is changed from the DCD design.

COL 5.2(10) The COL applicant is to provide the list of Code exemptions in the ISI program of the specific plants, if it exists.

COL 5.2(11) The COL applicant is to prepare and provide any requests for relief from the ASME Code requirements that are impracticable as a result of limitations of component design, geometry, or materials of construction for the specific plants, if necessary. The request will contain the information on applicable Code requirements, alternative ISI method, and justification.

COL 5.2(12) The COL applicant may invoke ASME Code cases listed in NRC RG 1.147 for the ISI program.

COL 5.2(13) The COL applicant is to prepare and implement a boric acid corrosion (BAC) prevention program compliant with Generic Letter 88-05.

COL 5.2(14) The COL applicant is to prepare the preservice inspection and testing program.

5.2.7 References

1. ANSI/ANS 51.1-1983, "American Nation Standard Nuclear Safety Criteria for the Design of Stationary Pressurized Water Reactor Plants," April 1983.

2. ASME Boiler and Pressure Vessel Code, Section III, "Rules for Construction of Nuclear Power Plant Components,"2007 Edition with 2008 Addenda.

3. 10 CFR 50.55a, "Codes and Standards," NRC Regulations Title 10.

4. NRC RG 1.26, "Quality Group Classification and Standards for Water-, Steam-, and Radioactive-Waste-Containing Components of Nuclear Power Plants," Revision 4, March 2007.

5. 10 CFR 50, Appendix A, “General Design Criteria for Nuclear Power Plants,” NRC Regulations Title 10.

6. 10 CFR 52.47, “Contents of Applications; technical information,” NRC Regulations Title 10.

7. NRC RG 1.84, “Design, Fabrication and Materials Code Case Acceptability, ASME Section III,” Revision 35, October 2010.

8. NRC RG 1.147, “Inservice Inspection Code Case Acceptability,” ASME Section XI, Division 1, Revision 16, October 2010.

9. NRC RG 1.192, “Operation and Maintenance Code Case Acceptability,” ASME OM Code, Revision 0, June 2003.

10. NRC SRP Branch Technical Position 5-2, “Overpressurization Protection of Pressurized - Water while Operating at Low Temperatures,” Revision 3, March 2007.

11. APR1400-Z-M-NR-13010-P, “Pressure-Temperature Limits Methodology for RCS Heatup and Cooldown,” Revision 0, September 2013.

12. DST Computer Service SA, “A nuclear and non-nuclear piping analysis program,” PIPESTRESS Version 3.7.0, Geneva, Switzerland, 2012.

13. NUREG/CR-5535, Rev. 3, “RELAP5/MOD3.3 Code Manual,” U.S. Nuclear Regulatory Commission, March 2006.

14. ASME Boiler and Pressure Vessel Code, Section II, “Materials,” 2007 Edition with 2008 Addenda.

15. NRC RG 1.99, “Radiation Embrittlement of Reactor Vessel Materials,” Revision 2, May 1988.

16. 10 CFR 50, Appendix G, “Fracture Toughness Requirements,” NRC Regulations Title 10.

17. EPRI TR - 105714 -R5, “PWR Primary Water Chemistry Guidelines,” Revision 5, March 2003.

18. EPRI 1014986, "PWR Primary Water Chemistry Guidelines," Revision 6, December 2007.

19. NRC RG 1.44, "Control of the Processing and Use of Stainless Steel," Revision 1, March 2011.

20. NRC RG 1.36, "Nonmetallic Thermal Insulation for Austenitic Stainless Steel," Revision 0, February 1973.

21. NRC SRP Branch Technical Position 5-3, "Fracture Toughness Requirements," Revision 2, March 2007.

22. NRC RG 1.50, "Control of Preheat Temperature for Welding of Low-Alloy Steel," Revision 1, March 2011.

23. ASME Boiler and Pressure Vessel Code Section III, Appendix D, "Nonmandatory Preheat Procedures," 2007 Edition with 2008 Addenda.

24. NRC RG 1.43, "Control of Stainless Steel Weld Cladding of Low-Alloy Steel Components," Revision 1, March 2011.

25. NRC RG 1.34, "Control of Electroslag Weld Properties," Revision 1, March 2011.

26. NRC RG 1.71, "Welder Qualification for Area of Limited Accessibility," Revision 1, March 2007.

27. ASTM A 262, "Standard Practices for Detecting Susceptibility to Intergranular Attack in Austenitic Stainless Steels," 2001.

28. NRC RG 1.37, "Quality Assurance Requirements for Cleaning of Fluid Systems and Associated Components of Water-Cooled Nuclear Power Plants," Revision 1, March 2007.

29. NRC RG 1.31, "Control of Ferrite Content in Stainless Steel Weld Metal," Revision 3, April 1978.

30. ASME Boiler and Pressure Vessel Code, Section XI, "Rules for Inservice Inspection of Nuclear Power Plant Components," 2007 Edition with 2008 Addenda.

31. EPRI report MRP-111, "Resistance to Primary Water Stress Corrosion Cracking of Alloys 690, 52, and 152 in Pressurized Water Reactors."

32. NRC RG 1.65, "Materials and Inspections for Reactor Vessel Closure Studs," Revision 1, April 2010.

33. ASME Boiler and Pressure Vessel Code, OM Code, "Code for Operation and Maintenance of Nuclear Power Plants," 2004 Edition with 2005, 2006 Addenda.

34. Generic Letter 88-05, "Boric Acid Corrosion of Carbon Steel Reactor Pressure Boundary Components in PWR Plants," March 1988.

35. NRC RG 1.29, "Seismic Design Classification," Revision 4, March 2007.

36. NRC RG 1.45, "Guidance on Monitoring and Responding to Reactor Coolant System Leakage," Revision 1, May 2008.

Table 5.2-1

Reactor Coolant System Pressure Boundary Code Requirements (1)

Components	Codes and Classes
RV, steam generators (primary side), pressurizer	ASME Section III, Nuclear Power Plant Components, Class 1
RCP (structural portions necessary to provide reasonable assurance of the integrity of the RCPB)	ASME Section III, Nuclear Power Plant Components, Class 1
RCP auxiliaries	ASME Section III, Nuclear Power Plant Components, Class 3
Pipe and valves	ASME Section III, Nuclear Power Plant Components, Class 1
Pressurizer spray and pilot-operated safety relief valves	ASME Section III, Nuclear Power Plant Components, Class 1
Steam generators (secondary side)	ASME Section III, Nuclear Power Plant Components, Class 2
Control element drive mechanisms (CEDMs)	ASME Section III, Nuclear Power Plant Components, Class 1
Primary component supports	ASME Section III, Nuclear Plant Component Supports, Class 1

(1) The codes listed in this table are construction codes.
The ASME Code of 2007 Edition with 2008 Addenda is applicable to the APR1400 for construction. In addition, the components listed in this table are designed and constructed to meet the test and inspection requirements of the ASME OM and ASME Section XI, Rules for Inservice Inspection, 2007 Edition with 2008 Addenda.

Table 5.2-2 (1 of 5)

Reactor Coolant System Materials and Weld Materials

Component	Material Specification
Reactor Vessel	
Forgings	SA-508 Grade 3 Class 1
Plates	SA-533 Type B Class 1
Cladding(1)	Weld deposited austenitic stainless steel with 5FN-18FN delta ferrite or NiCrFe alloy
Direct vessel injection (DVI) nozzle safe ends(1)	SA-182 Grade F316 or F316LN
RV head(1), (3) CEDM nozzles	NiCrFe Alloy 690 (SB-166)
Vessel internals(1)	Austenitic stainless steel and NiCrFe alloy
Flow skirt(1), (3)	NiCrFe Alloy 690 (SB-168)
Fuel cladding(1)	ZIRLO
Instrument nozzles(1), (3)	NiCrFe Alloy 690 (SB-166)
Closure head studs	SA-540 Grade B24 Class 3
Control Element Drive Mechanism Housings	
Lower(1)	Type 403 stainless steel according to Code Case N-4-12 with end fittings to be SB-166 (N06690)(3) and SA-182 Grade F347/F348 stainless steel
Upper(1)	SA-479 and SA-213 Type 316 stainless steel with end fitting of SA-479 Type 316 and vent valve ball seal of Type 440C stainless steel
Pressurizer	
Shell	SA-533 Type B Class 1 or SA-508 Grade 3 Class 1
Cladding(1)	Weld-deposited austenitic stainless steel with 5 FN-18FN delta ferrite or NiCrFe alloy
Forged nozzles	SA-508 Grade 3 Class 1
Instrument nozzles and heater sleeves(1), (3)	NiCrFe Alloy 690 (SB-166, SB-167 or SB-168)
Nozzle safe ends(1)	SA-182 Grade F316, F316LN, F316N or F347
Studs and nuts	SB-637 N07718

Table 5.2-2 (2 of 5)

Component	Material Specification
Steam Generator	
Primary head	SA-533 Type B Class 1 or SA-508 Grade 3 Class 1
Primary nozzles	SA-508 Grade 3 Class 1
Primary head cladding(1)	Weld deposited austenitic stainless steel with 5FN-18FN delta ferrite or NiCrFe alloy
Tubesheet	SA-508 Grade 3 Class 1 or Class 2
Divider Plate (1)	SA-240 Type 410S
Tubesheet stay	SA-508 Grade 3 Class 1 or Class 2
Tubesheet cladding (1)	Weld-deposited NiCrFe alloy
Tube (1),(3)	NiCrFe Alloy 690 (SB-163)
Tube supports	ASTM A240, Type 409
Secondary shell(4)	SA-533 Type B Class 1 or SA-508 Grade 3 Class 1
Secondary head(4)	SA-508 Grade 1, Grade 1a or Grade 3 Class 1, or SA-533 Type B Class 1
Secondary nozzles(4)	SA-508 Grade 1, Grade 1a, Grade 3 Class 1 or Grade 3 Class 2
Secondary nozzle safe ends(4)	SA-508 Grade 1 or 1a
Secondary instrument nozzles(4)	SA-106 Grade B, SA-333 Grade 6
Secondary studs and nuts	SA-540 Grade B24, or SA-193 Grade B7
Primary studs and nuts	SB-637 N07718

Table 5.2-2 (3 of 5)

Component	Material Specification
Reactor Coolant Pumps	
Casing	SA-508 Grade 3 Class 1 and clad with austenitic stainless steel
Cladding(1)	Weld-deposited austenitic stainless steel with 5FN-18FN delta ferrite
Internals(1)	SA-487 CA6NM, SA-336 Type 304, 304LN, 347 or austenitic stainless steel
Shaft(1)	SA-182 Grade F6NM
Reactor Coolant Piping	
Pipe (30 in and 42 in ID)	SA-516 Grade 70 or SA-508 Grade 1 or Grade 1a
Cladding(1)	Weld-deposited austenitic stainless steel with 5FN-18FN delta ferrite
Piping Nozzles and Safe Ends	
Nozzle forgings	SA-508 Grade 1, Grade 1a, or Grade 3 Class 1
Instrument nozzles(1),(3)	NiCrFe Alloy 690 (SB-166)
Nozzle safe ends(1)	SA-182 Grade F316, F316N, F316LN, F347, or NiCrFe Alloy 690 (SB-166)
Valves(1)	SA-351 CF8M or SA-182 Grade F316 or NiCrFe Alloy 690 (SB-166) F316LN
Surge line(1)	SA-312 TP347 or TP316N (piping) SA-403 WP347 or WP316LN (elbows)
DVI and shutdown lines inside containment	SA-312 TP316 or TP304

Table 5.2-2 (4 of 5)

Base Material Type(5)	Base Material Type(5)	Type of Weld Material	Example of Use
Weld Materials for Reactor Coolant Pressure Boundary Components			
P-1	P-1	a. SFA 5.1 E-7018, E-7016 b. SFA 5.18 ER70S-6 c. SFA 5.23, EA-3(N)	Primary piping straight to primary piping elbows
P-1	P-3	a. SFA 5.1 E-7018, E-7016 b. SFA 5.5 E-8018-C3, E-8018-G, E-8016-G c. MIL-E-18193 B-4 d. SFA 5.23 EA3 e. SFA 5.18 ER70S-6	Primary piping straight to the RV primary nozzle
P-1	P-8	a. NiCrFe filler metal b. SFA 5.4 E309L-16 c. SFA 5.9 ER309L	Primary piping surge nozzle to surge nozzle safe end
P-1	P-43	NiCrFe filler metal	Buttering (NiCrFe filler metal) of J-grooves in hot leg pipe
P-3	P-3	a. SFA 5.5(2) E-8016-C3, E-8018-G, E-8016-G b. MIL-E-18193 B-4(2) c. SFA 5.23 EA3(2)	RV upper shell to RV flange
P-3	P-8	a. NiCrFe filler metal b. SFA 5.4 E309L-16 c. SFA 5.9 ER309L	POSRV nozzle to POSRV safe end
P-3	P-43	a. NiCrFe filler metal	Buttering (NiCrFe filler metal) of J-grooves in RV closure head
P-8	P-8	a. SFA 5.4 E308, E308L, E308L-16, E309, E309L-16, E316, E347 b. SFA 5.9 ER308, ER308L, ER309, ER309L, ER316, ER347	Surge line piping to surge line elbows

Table 5.2-2 (5 of 5)

Base Material Type(5)	Base Material Type(5)	Type of Weld Material	Example of Use
Weld Materials for Reactor Coolant Pressure Boundary Components (cont.)			
P-8	P-43	a. NiCrFe filler metal	Pressurizer instrument nozzles to pressurizer instrument nozzle safe ends
P-43	P-43	a. NiCrFe filler metal	RV CEDM nozzles to J-groove buttering (NiCrFe filler metal)
Stainless steel cladding(1)		a. SFA 5.4 E308, E308L, E308L-16, E309, E309L, E309L-16 b. SFA 5.9 ER308, ER308L, ER 309, ER309L c. SFA 5.22 E308LT1-1, E309LT1-1	—
Nickel alloy cladding(1)		a. NiCrFe filler metal	—

(1) Materials exposed to reactor coolant

(2) Special weld wire with low residual elements of copper, nickel and phosphorous as specified when used in the RV core beltline region

(3) Material to be provided in the thermally treated condition

(4) SG secondary side pressure boundary materials including weld materials contain no greater than 0.010 weight percent of sulfur (S)

(5) P-number designations are per the ASME Section IX, Table QW-422

Table 5.2-3

SCS Suction Line Relief Valve Valves (SI-179 and SI-189) Design Parameters

Parameter	Value
Design pressure, kg/cm^{2}G (psig)	63.2 (900)
Design temperature, °C (°F)	204.4 (400)
Fluid	Reactor coolant
Nominal setpoint, kg/cm^{2}G (psig)	37.3 (530)(1)
Accumulation	10 %
Capacity, L/min (gpm)	29,337 (7,750) (@ 10 % accumulation)
Inlet line size, cm (in)	20.3 (8)
Outlet line size, cm (in)	25.4 (10)

(1) Pressure measured at the valve inlet

Table 5.2-4

ASME Section III Code Cases

Code Case	Title
N-4-12	Special Type 403 Modified Forgings or Bars, Section III, Division 1, Class 1 and CS
N-60-5	Materials for Core Support Structures, Section III, Division 1
N-71-18	Additional Materials for Subsection NF, Classes, 1, 2, 3 & MC Component Supports Fabricated by Welding, Section III, Division 1
2142-2	F-number Grouping for NiCrFe Filler Metals, Section IX (Applicable to all Sections, including Section III, Division 1, and Section XI)
N-759-0	Alternative Rules for Determining allowable External Pressure and Comprehensive Stress for Cylinders, Cones, Spheres, and formed Heads, Section III, Division 1

Table 5.2-5

Reactor Coolant Design Specification

Parameter	Limit	Remarks
pH	4.2 ~ 10.7 ppm	3.8~10.7 during cooldown(1)
Hydrazine	0 ~ 50 ppm	This specification applies when reactor coolant temperature is less than 65.6 °C during heatup. It also applies below 204.4 °C below during cooldown.
Ammonia	0 ~ 50 ppm	—
Lithium	0 ~ 3.5 ppm	—
Dissolved hydrogen	0 ~ 100 cc (STP) H_2/kg H_2O	—
Dissolved oxygen	0 ~ 0.1 ppm	This specification applies when the reactor coolant temperature is greater than 121.1 °C. The reactor coolant is air saturated during heatup with the coolant temperature below 121.1 and during cooldown with the coolant temperature below 65.6 °C.
Dissolved nitrogen	0 ~ 100 cc (STP) N_2/kg H_2O	—
Suspended solids	0 ~ 2.0 ppm	—
Chloride	0 ~ 0.15 ppm	—
Fluoride	0 ~ 0.15 ppm	—
Boron	0 ~ 2,500 ppm	4,400 ppm during cooldown (1)
Sulfate	0 ~ 0.15 ppm	—
Zinc	0 ~ 0.02 ppm	—

(1) The frequency and duration for cooldowns are as follows:

a) 40 cycles of 1 month duration

b) 260 cycles of 1 week duration

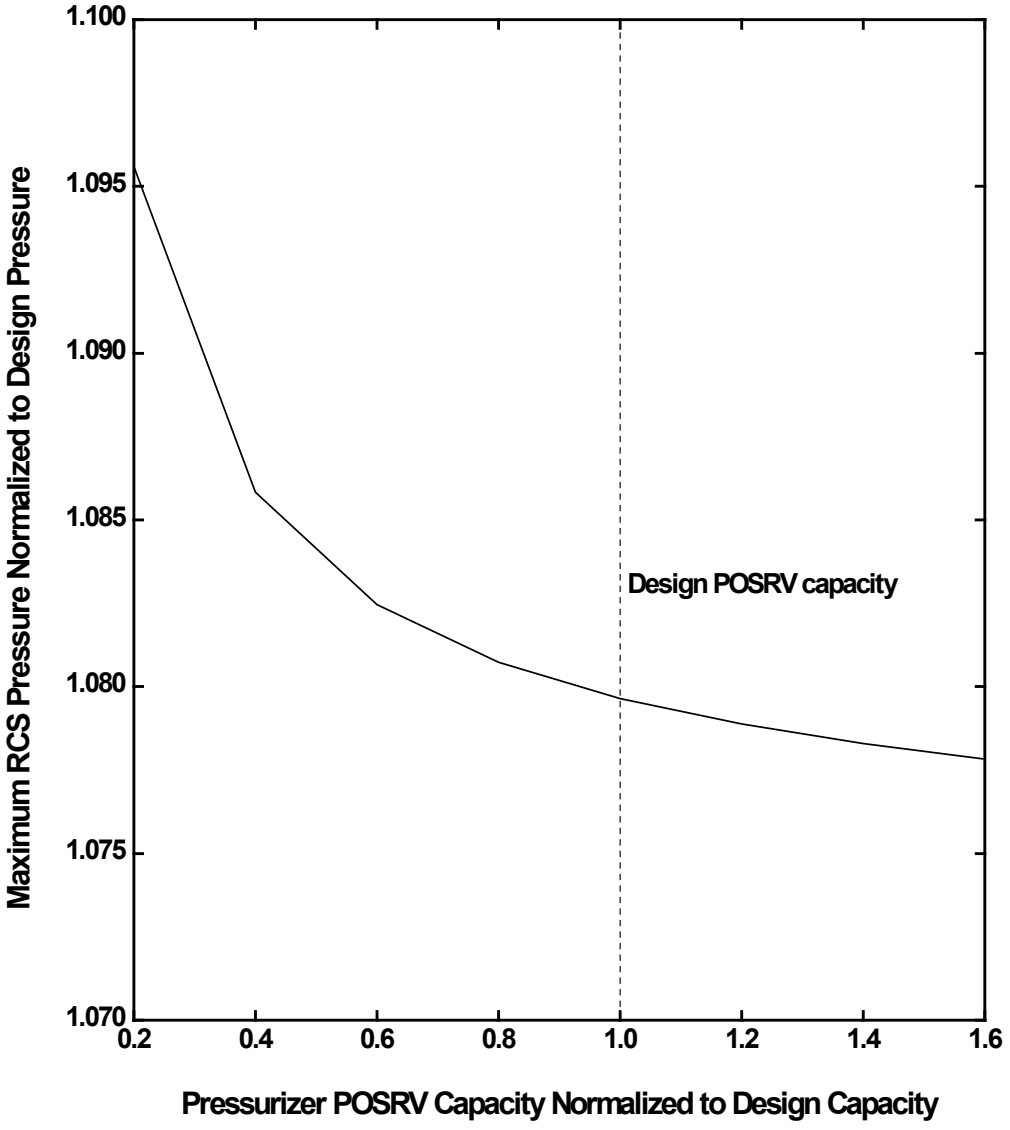

Figure 5.2.2-1 Optimized Pressurizer POSRV Capacity

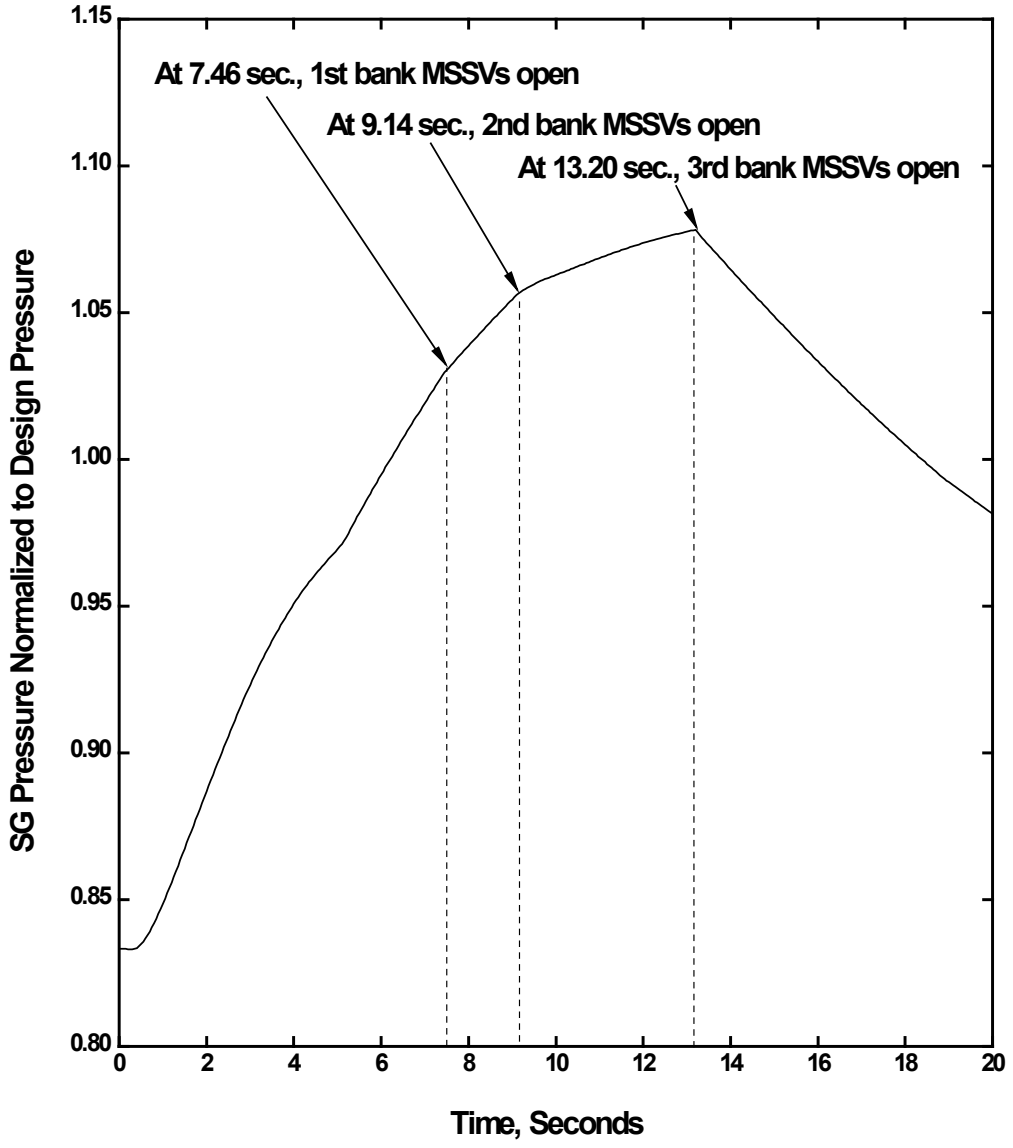

Figure 5.2.2-2 Steam Generator Pressure Normalized to Design Pressure vs. Time for the Worst-Case Loss-of-Load Event

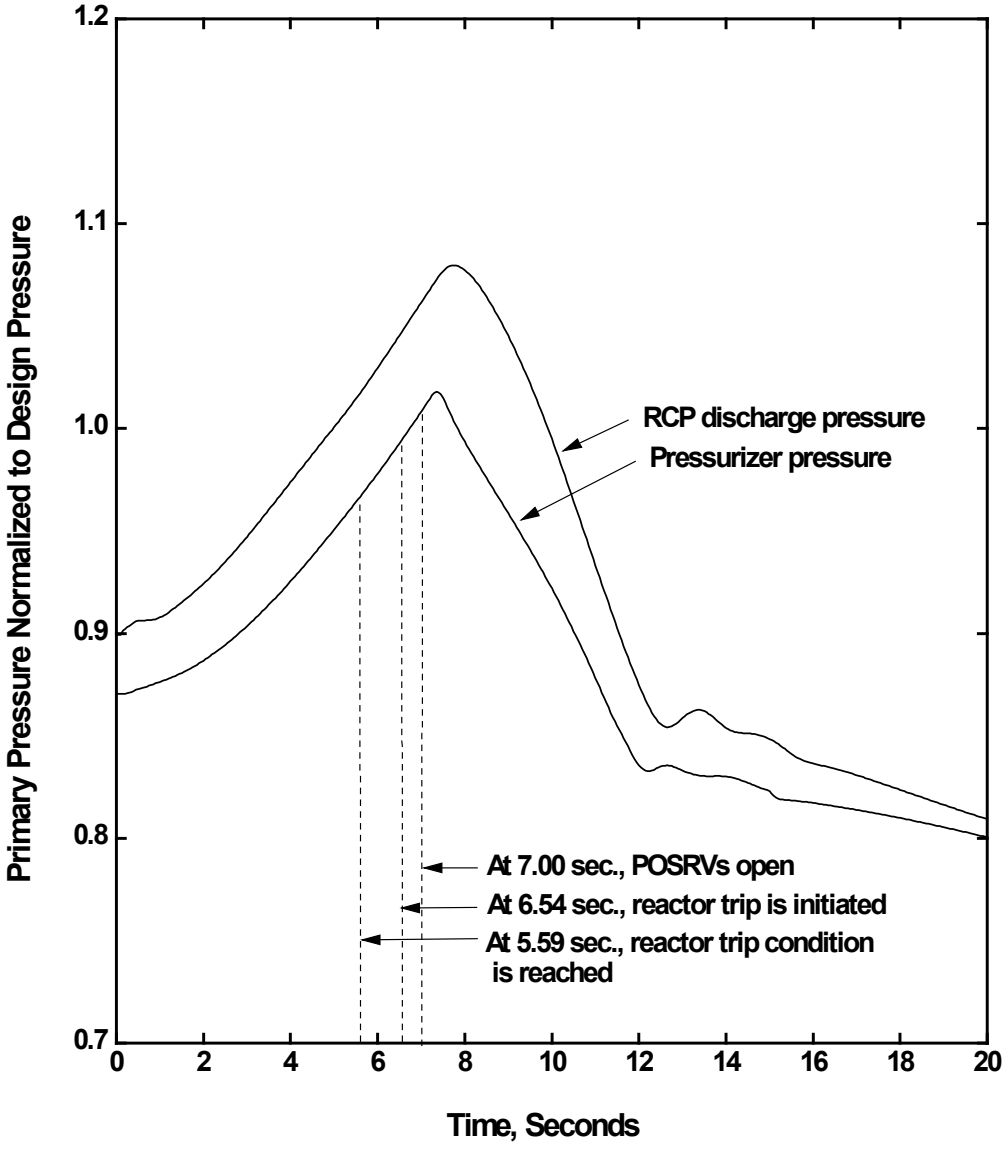

Figure 5.2.2-3 Primary Pressure Normalized to Design Pressure vs. Time for the Worst-Case Loss-of-Load Event

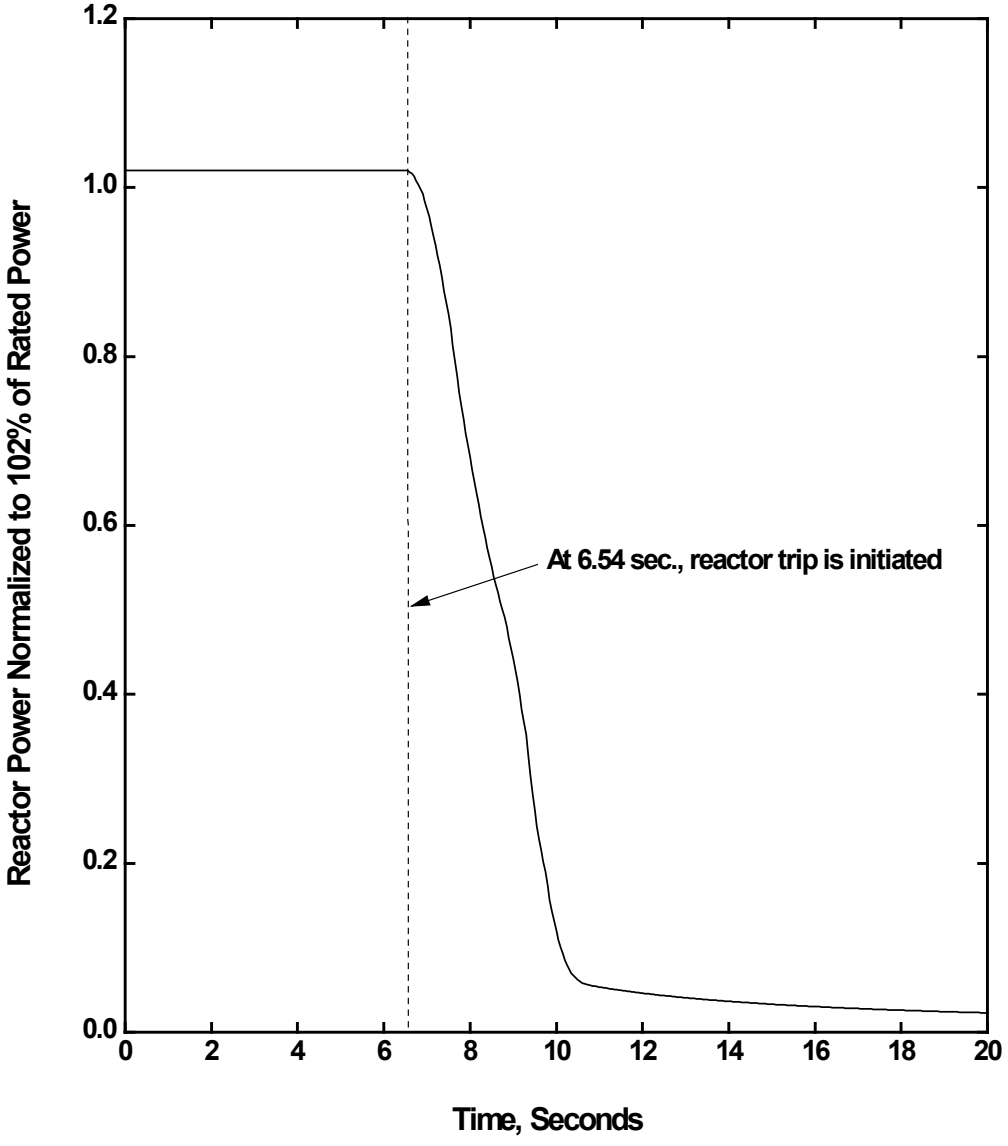

Figure 5.2.2-4 Reactor Power Normalized to 102% of Rated Power vs. Time for the Worst-Case Loss-of-Load Event

5.3 Reactor Vessel

5.3.1 Reactor Vessel Materials

The APR1400 reactor vessel materials meet the following requirements:

a. General Design Criteria (GDC) 1 and 30 in Appendix A of 10 CFR 50 (Reference 1) as related to quality standards for design, fabrication, erection, and testing of structures, systems, and components

b. GDC 4 as related to the compatibility of components with environmental conditions

c. GDC 14 as related to the prevention of rapidly propagating fractures of the reactor coolant pressure boundary (RCPB)

d. GDC 31 as related to material fracture toughness

e. GDC 32 as related to the requirements for a materials surveillance program

f. 10 CFR 50.55a (Reference 2) as related to quality standards for design and determination and monitoring of fracture toughness

g. 10 CFR 50.60 (Reference 3) as related to RCPB fracture toughness

h. 10 CFR 50, Appendix B, Criterion XIII (Reference 4) as related to onsite material cleaning control

i. 10 CFR 50, Appendix G (Reference 5) as related to materials testing and acceptance criteria for fracture toughness

j. 10 CFR 50, Appendix H (Reference 6) as related to the determination and monitoring of fracture toughness

5.3.1.1 Material Specifications

The principal ferritic materials used in the reactor vessel are listed in Table 5.2-2. These materials are in accordance with ASME Section III. Ferritic reactor vessel pressure boundary materials satisfy the fracture toughness requirements of 10 CFR 50, Appendix G and NRC SRP BTP 5-3 (Reference 7).

The physical and mechanical properties of the reactor vessel material and the effects of radiation on the materials are described in Subsection 5.3.2.1.1.

5.3.1.2 Special Process Used for Manufacturing and Fabrication

The reactor vessel is fabricated in accordance with ASME Section III (Reference 8), NB-4000, and its materials satisfy the requirements of ASME Section III, NB-2000. Application of the appropriate Code Symbol and completion of a data report are in accordance with ASME Section III, NCA-8000. No special manufacturing methods that could compromise the integrity of the vessel are used. The reactor vessel is a vertically mounted cylindrical vessel with a hemispherical lower head welded to the vessel and a removable hemispherical upper closure head. The construction consists of forged rings, forged hemispherical heads, forged flanges on the closure head, and forged nozzles. Pressure boundary reactor vessel forgings are made of ASME SA-508 Grade 3, Class 1, low-alloy steel. The forgings are supplied in a quenched and tempered condition. Vacuum degassing, to lower the hydrogen level and to improve the quality of the steel, is applied to the forgings. The forgings in the reactor vessel beltline and the as-deposited welds contain no greater than the weight percent of residual elements described in Subsection 5.2.3.1. The internal surfaces that are in contact with the reactor coolant and vessel flange surface are clad with austenitic stainless steel or NiCrFe alloy.

The reactor vessel except for the closure head consists of three shell sections (upper, intermediate, and lower) and a lower head. The upper shell section is forged to have a flange with a machined ledge on the inside surface to support the core support barrel, which in turn supports the reactor internals and the core. The length of each shell is adjusted not to include the welds within the effective core region. The vessel flange is drilled and tapped to receive the closure studs and is machined to provide a mating surface for the reactor vessel closure seals. Each shell consists of one 360-degree forged ring. The lower head is constructed of a single hemispherical forging. The three shell sections and

the lower head forging are joined by welding, along with 4 inlet nozzle forgings, 2 outlet nozzle forgings, 4 direct vessel injection (DVI) nozzle forgings, and 61 in-core instrument nozzles to form a complete vessel assembly.

The closure head is fabricated separately since it is joined to the reactor vessel by bolting. The closure head consists of a head flange and a dome. The head flange is a forged ring. The flange is drilled to match the vessel flange stud hole locations, and the lower surface of the flange is machined to provide a mating surface for the vessel closure seals. The dome is constructed of a single hemispherical forging. The dome and flange are welded together to form the closure head, and the control element drive mechanism (CEDM) nozzles are welded into the head to complete the assembly.

Welding materials for the reactor vessel conform to ASME Sections II and III, or satisfy requirements for other welding materials as permitted in ASME Section IX. Table 5.2-2 shows the welding material specifications for the APR1400 RCS application.

Welding of the pressure boundary parts of the reactor vessel is performed in accordance with the welding procedure specifications (WPSs), which satisfy the requirements of ASME Sections III and IX.

Welding processes such as submerged arc welding (SAW), flux cored arc welding (FCAW), and gas tungsten arc welding (GTAW) are applied for stainless steel or nickel-based alloy cladding of reactor vessel internal surfaces. Welding processes such as GTAW and shielded metal arc welding (SMAW) are applied to dissimilar welds by buttering. Welding processes such as SMAW and SAW are applied to the reactor vessel dome and flange weld, flange-shell-head welds, and other girth seam welds. The build-up application uses primarily the SMAW process. Electroslag welding is not used in the reactor vessel.

Welding of low-alloy steel pressure boundary welds complies with the recommendations of NRC RG 1.50 (Reference 9). Preheat temperatures utilized for low alloy steel are in accordance with ASME Section III, Appendix D. The maximum interpass temperature utilized is generally 260 °C (500 °F). In the event that the requirements in Paragraphs C.1., C.2., and C.3. of NRC RG 1.50 are not met, the soundness of the weld is demonstrated by an examination that meets the acceptance criteria specified in ASME

Section III. Hydrogen is removed either by maintaining preheat until post-weld heat treatment is performed or by post-heating at a temperature and for the length of time that are sufficient to preclude the effects of hydrogen-assisted cracking.

Post-weld heat treatment temperature and time for welds of low alloy steels are in accordance with ASME Section III, NB-4620.

5.3.1.3 Special Methods for Nondestructive Examinations

Prior to, during, and after fabrication of the reactor vessel, nondestructive tests based on ASME Section III are performed on all welds and forgings as required. The nondestructive examination requirements including calibration methods, instrumentation, sensitivity, reproducibility of data, and acceptance standards are in accordance with the requirements of ASME Section III (see Table 5.2-1). These methods, procedures, and requirements are compatible with ASME Section XI (Reference 10) so that the results of the preservice inspections can be correlated with inservice inspections. Strict quality control is maintained in critical areas such as calibration of test instruments.

All full-penetration, pressure-containing welds are 100 percent radiographed to the standards of ASME Section III. Weld preparation areas, back-chip areas, and final weld surfaces are magnetic-particle or liquid-penetrant examined. Other pressure-containing welds, such as those used for the attachments of nonferrous nickel-chromium-iron CEDM nozzles and vent and instrument nozzles to the reactor vessel and head, are inspected by liquid-penetrant tests of the root pass (the lesser of half of the thickness or each 12.7 mm (1/2 in) of weld deposit and the final surface). Additionally, the base metal weld preparation area is magnetic-particle and is examined prior to overlay with nickel-chromium-iron weld metal.

All forgings are inspected by ultrasonic testing using longitudinal beam techniques. In addition, ring forgings are tested using shear wave techniques.

All carbon-steel and low alloy forgings and ferritic welds are also subjected to magnetic-particle examination after stress relief.

All vessel bolting material is examined using ultrasonic and magnetic-particle examination during the manufacturing process. The bolting material receives a straight-beam, longitudinal and radial-scan, ultrasonic examination with a search unit area not exceeding 645 mm^2 (1 in^2).

All hollow material excluding stud, nut, and washer material receives second ultrasonic examination using angle-beam in circumferential direction with a search unit area not exceeding 645 mm^2 (1 in^2). A reference specimen of the same composition and thickness containing a notch (located on the inside surface) of 25.4 mm (1 in) in length and a depth of 3 percent of nominal section thickness, or 6 mm (1/4 in), whichever is less, is used for calibration. Use of these techniques provides reasonable assurance that no materials that have unacceptable flaws, observable cracks, or sharply defined linear defects are used. The magnetic-particle inspection is performed both before and after threading of the studs.

Upon completion of all post-weld heat treatments, the reactor vessel is hydrostatically tested, and all accessible ferritic weld surfaces, including those used to repair material, are magnetic-particle inspected in accordance with ASME Section III.

Clad surfaces that are subject to high load conditions and carrying load of attachments are ultrasonically tested as necessary to provide reasonable assurance of the bond required for the intended service. In all other areas, the cladding is also ultrasonically inspected for lack of bond, transverse to the direction of welding.

Tables 5.3-8 and 5.3-9 summarize the nondestructive examination methods that are used for the reactor vessel base materials and welds, respectively.

5.3.1.4 Special Controls for Ferritic and Austenitic Stainless Steels

Subsection 5.2.3 describes details concerning controls for welding of ferritic and austenitic stainless steels. Applicable NRC Regulatory Guides (RGs) for the reactor vessel for this purpose and subsections describing conformance to the RGs are identified as follows:

a. NRC RG 1.31, "Control of Ferrite Content in Stainless Steel Weld Metal" (Reference 11), is addressed in Subsection 5.2.3.4.4.

b. NRC RG 1.34, "Control of Electroslag Weld Properties" (Reference 12), is addressed in Subsection 5.2.3.3.

c. NRC RG 1.37, "Quality Assurance Requirements for Cleaning of Fluid Systems and Associated Components of Water-Cooled Nuclear Power Plants" (Reference 13), is addressed in Subsection 5.2.3.4.2.

d. NRC RG 1.43, "Control of Stainless Steel Weld Cladding of Low-Alloy Steel Components" (Reference 14), is addressed in Subsection 5.2.3.3.

e. NRC RG 1.44, "Control of the Processing and Use of Stainless Steel" (Reference 15), is addressed in Subsection 5.2.3.4.1.

f. NRC RG 1.50, "Control of Preheat Temperature for Welding of Low-Alloy Steel," is addressed in Subsection 5.2.3.3.

g. NRC RG 1.71, "Welder Qualification for Areas of Limited Accessibility" (Reference 16), is addressed in Subsection 5.2.3.3.

h. NRC RG 1.99, "Radiation Embrittlement of Reactor Vessel Materials" (Reference 17), is addressed in Subsection 5.3.1.6.7.

i. NRC RG 1.190, "Calculational and Dosimetry Methods for Determining Pressure Vessel Neutron Fluence" (Reference 18), is addressed in Subsection 4.3.3.3.

Tools used in abrasive work operations on austenitic stainless steel, such as grinding or wire brushing, do not contain and are not contaminated with ferritic carbon steel or other materials that could contribute to intergranular cracking or stress corrosion cracking (SCC).

5.3.1.5 Fracture Toughness

In accordance with 10 CFR 50, Appendix G, Paragraph IV A, the reactor vessel beltline materials have minimum upper-shelf energy of 102 Joules (75 ft-lbs) as determined from Charpy V-notch tests on unirradiated specimens in accordance with ASME Section III, NB-2320. In addition, the reactor vessel beltline materials satisfy the requirements of NRC

SRP BTP 5-3. The detailed information on the upper shelf energy of the reactor vessel beltline materials is described in Subsection 5.3.2.4. Charpy impact tests are performed on transversely (weak direction) oriented specimens from the beltline forgings to establish RT_{NDT} as required by 10 CFR 50, Appendix G.

The RT_{NDT} of reactor vessel materials is determined based on a nil-ductility transition temperature (T_{NDT}) obtained through a drop weight test and the results of Charpy V-notch tests which are carried out at temperatures not greater than T_{NDT} + 33 °C (T_{NDT} + 60 °F). The T_{NDT} is the RT_{NDT} when the Charpy V-notch test results exhibit at least 0.89 mm (35 mils) lateral expansion and not less than 68 J (50 ft-lb) absorbed energy. Test coupons, test specimens, testing procedures, testing requirements, and acceptance criteria for RT_{NDT} determination are fabricated, established, or applied in accordance with ASME Section III, NB-2300.

An initial RT_{NDT} for the reactor vessel active core region base material, the girth seam between the intermediate and lower shell courses, and the girth seam between the lower shell courses and bottom head is –23.3 °C (–10 °F). An initial RT_{NDT} for the remaining material of the reactor vessel pressure boundary is –12.2 °C (10 °F).

As a result of fast neutron irradiation in the region of the core, RT_{NDT} of irradiated material increases with operation. The effect of neutron irradiation is taken into account in accordance with NRC RG 1.99.

5.3.1.6 Material Surveillance

The irradiation surveillance program for the APR1400 is conducted to assess the neutron-induced changes in the RT_{NDT} (reference temperature) and mechanical properties of the reactor vessel materials. Changes in the impact and mechanical properties of the material are evaluated by the comparison of pre-irradiation and post-irradiation test results. The capsules containing the surveillance test specimens used for monitoring the neutron-induced property changes of the reactor vessel materials are irradiated under conditions that represent, as closely as practical, the irradiation conditions of the reactor vessel.

The APR1400 reactor vessel surveillance program satisfies the ASTM E185 (Reference 19) requirements for surveillance tests in light water cooled nuclear power reactor vessels, and

the requirements of Appendix H of 10 CFR 50 and NRC SRP BTP 5-3. The COL applicant is to provide a reactor vessel material surveillance program for a specific plant (COL 5.3(1)).

5.3.1.6.1 Test Material Selection

Materials selected for the surveillance program are those judged most likely to be controlling with regard to radiation embrittlement according to the recommendations of NRC RG 1.99.

Surveillance test materials are prepared from the actual materials used in fabricating the beltline region of the reactor vessel. The test materials are processed so they are representative of the materials in the completed reactor vessel. Specimens are prepared from three metallurgically different materials, including base metal, weld metal, and heat-affected zone (HAZ) material.

Base metal test material is from a section of the shell course forging that is selected from the beltline of the reactor vessel. Selection is based on an evaluation of initial toughness (characterized by an index temperature such as RT_{NDT}) and the estimated effect of chemical composition and neutron fluence on the toughness during reactor operation. Normally, the forging with the highest adjusted reference temperature at end-of-life is selected as the surveillance base metal test material.

Weld metal test material, representative of the controlling reactor pressure vessel weld, is produced by welding together sections of forgings from the beltline of the reactor vessel. The HAZ test material is manufactured from a section of the same forgings used for base metal surveillance test material. The weld metal test material is produced from the same heat of weld wire or rod and lot of flux used in the beltline of the reactor vessel. Welding parameters duplicate those used for the beltline welds.

Two additional sets of test specimens for each material are provided as representative stock (archival material) with documentation and identification.

5.3.1.6.2 Test Specimens

5.3.1.6.2.1 Type and Quantity

Drop weight, standard and precracked Charpy impact, tensile test, and compact tension fracture toughness specimens are provided for unirradiated baseline tests. Drop weight tests are conducted in accordance with ASTM E208 (Reference 20). Charpy impact tests are conducted in accordance with ASTM E23 and A370 (References 21 and 22, respectively). Tensile tests are conducted in accordance with ASTM E8 and E21 (References 23 and 24, respectively). Fracture toughness tests are performed in accordance with ASTM E1820 and E1921 (References 25 and 26, respectively). Correlation of drop weight and Charpy impact tests to establish RT_{NDT} is made in accordance with ASME Section III, NB-2300. Standard and precracked Charpy impact, tensile test, and compact tension fracture toughness specimens are provided for post-irradiation tests.

The total quantity of specimens furnished for carrying out the overall requirements of this program is presented in Table 5.3-1.

Type and quantity of specimens for baseline testing are shown in Table 5.3-2, and irradiation encapsulation is shown in Table 5.3-3.

5.3.1.6.2.2 Baseline Specimens

The type and quantity of test specimens provided for establishing the properties of the unirradiated reactor vessel materials are presented in Table 5.3-2. The data from tests of these specimens provide the basis for determining the neutron-induced property changes of the reactor vessel materials.

Twelve drop weight test specimens are provided for each base metal (transverse), weld metal, and HAZ material for establishing the nil-ductility transition temperature (T_{NDT}) of the unirradiated surveillance materials. These data form the basis for RT_{NDT} determination. RT_{NDT} is the reference temperature from which subsequent neutron-induced changes are determined.

Twenty-four standard Charpy test specimens are provided for each base metal (longitudinal and transverse), weld metal, and HAZ material. This quantity exceeds the minimum number of test specimens recommended by ASTM E185 for developing a Charpy impact energy transition curve and is intended to provide a sufficient number of data points for establishing accurate Charpy impact energy transition temperatures for these materials. These data, together with the drop weight T_{NDT}, are used to establish an RT_{NDT} for each material.

Twelve precracked Charpy impact test specimens are provided for each base metal (longitudinal and transverse) and weld metal in addition to the standard Charpy impact specimens. This quantity is sufficient to determine fracture toughness properties (critical stress intensity factors under dynamic loading) over the range extending from linear elastic to elastic-plastic fracture.

Twelve tensile test specimens are provided for each base metal (longitudinal and transverse) and weld metal. This quantity also exceeds the minimum number of test specimens recommended by ASTM E185 and is intended to permit a sufficient number of tests for accurately establishing the tensile properties for these materials at a minimum of three test temperatures.

Eight 1T compact tension test specimens and four 1/2T compact tension test specimens are provided for each base metal (transverse) and weld metal. For base metal (longitudinal), four 1T and four 1/2T compact tension test specimens are provided. These specimens are for augmenting the fracture toughness data determined from the precracked Charpy tests. This quantity of specimens is sufficient to determine fracture toughness properties over the range extending from linear elastic to elastic-plastic fracture behavior.

5.3.1.6.2.3 Irradiated Specimens

Specimens for the tensile test, standard and precracked Charpy impact test, and 1/2T compact tension test are used for determining changes in the strength and static and dynamic toughness properties of the materials due to neutron irradiation. A total of 360 standard Charpy impact, 162 precracked Charpy impact, 72 1/2T compact tension, and 54 tensile test specimens are provided. The type and quantity of test specimens provided for establishing the properties of irradiated materials over the 60 years life of the vessel are presented in Table 5.3-3. Compact tension specimens provided for capsule irradiation are

precracked prior to insertion to reduce the time required for post-irradiation testing. The types and quantity of specimens provided exceed the minimum requirements of ASTM E185.

5.3.1.6.3 Surveillance Capsules

The surveillance test specimens are placed in corrosion resistant capsule assemblies for protection from the primary coolant during irradiation. The capsules also serve to physically locate the test specimens in selected positions within the reactor vessel and to facilitate the removal of a desired quantity of test specimens when a specified radiation exposure has been attained. Six identical surveillance capsule assemblies are provided for the reactor vessel. Four of the assemblies are for retrieval, and two are for standby. The type and quantity of specimens contained in each type of capsule assembly are presented in Table 5.3-4.

A typical capsule assembly, illustrated in Figure 5.3-1, consists of a series of three specimen compartments that are connected by wedge couplings and a lock assembly. Each compartment enclosure of the capsule assembly is internally supported by the surveillance specimens and is externally pressure tested to 219.7 kg/cm^2 (3,125 psi) during final fabrication. The wedge couplings also serve as end caps for the specimen compartments and position the compartments within the capsule holders, which are attached to the reactor vessel cladding. The lock assemblies fix the locations of the capsules within the holders by exerting axial forces on the wedge coupling assemblies; this causes the wedges to exert horizontal forces against the sides of the holders preventing relative motion. The lock assemblies also serve as a point of attachment for the tooling used to remove the capsules from the reactor.

Each capsule assembly is made up of upper compartment assembly, center compartment assembly, and lower compartment assembly. Each capsule assembly is assigned a unique identification so that a complete record of test specimen location within each compartment can be maintained.

5.3.1.6.3.1 Upper Compartment Assembly

The upper compartment assembly contains 12 Charpy impact test specimens, nine base metal (longitudinal) Charpy impact test specimens, and a set of five flux spectrum monitors in the top section as shown in Figure 5.3-2. The bottom section contains three base metal (longitudinal) Charpy impact test specimens, six base metal (transverse) Charpy impact test specimens, three base metal (longitudinal) tension specimens, and four base metal (longitudinal) 1/2T compact tension specimens.

The Charpy test specimens are arranged vertically in 1 × 3 arrays and are oriented with the notch toward the reactor core. The 1/2T compact tension specimens are oriented so that the opening of the crack starter notch is facing the top of the compartment. This orientation results in a neutron flux gradient parallel to the crack front. The temperature differential between the specimens and the reactor coolant is minimized by using spacers between the specimens and the compartment and by sealing both sections of the assembly in an atmosphere of helium. This quantity of specimens provides an adequate number of data points for establishing a Charpy impact energy transition curve for a given irradiated material. Comparison of the unirradiated and irradiated Charpy impact energy transition curves permits determination of the RT_{NDT} changes due to irradiation for the various materials.

5.3.1.6.3.2 Center Compartment Assembly

The center compartment assembly contains six base metal (transverse) Charpy impact test specimens, 12 weld metal Charpy impact test specimens, and six base metal (longitudinal) precracked Charpy impact test specimens in the top section as shown in Figure 5.3-3. The bottom section contains three base metal (longitudinal) precracked Charpy impact test specimens, a set of 11 flux spectrum monitors, a set of four temperature monitors, three base metal (transverse) tension specimens, and four base metal (transverse) 1/2T compact tension specimens. Both compartment sections are sealed within an atmosphere of helium. The tension specimens are placed in a housing machined to fit the compartment. Split spacers are placed around the specimen gage length to minimize the temperature differential between the specimen gage length and the reactor coolant. The impact specimens are arranged vertically in 1 × 3 arrays and are oriented with the notch toward the reactor core. Spacers are utilized between the test specimens and the compartment.

5.3.1.6.3.3 Lower Compartment Assembly

The lower compartment assembly contains four weld metal 1/2T compact tension specimens, three weld metal tension test specimens, and nine base metal (transverse) pre-cracked Charpy impact test specimens in the top section as shown in Figure 5.3-4. The tension specimens are placed in a housing machined to fit the compartment. Split spacers are placed around the specimen gage length to minimize the temperature differential between the specimen gage length and the reactor coolant. The impact specimens are arranged vertically in 1 × 3 arrays and are oriented with the notch toward the reactor core. Spacers are utilized between the test specimens and the compartment. The bottom section contains a set of five flux spectrum monitors, nine weld metal precracked Charpy impact test specimens, and 12 Charpy impact test specimens. Both compartment sections are sealed within an atmosphere of helium.

5.3.1.6.4 Neutron Irradiation and Temperature Exposure

The changes in the RT_{NDT} of the reactor vessel materials are derived from specimens irradiated to various fluence levels in different neutron energy spectra. To accurately predict the RT_{NDT} of the vessel materials, complete information on the neutron flux energy spectra and the irradiation temperature of the encapsulated specimens are available.

5.3.1.6.4.1 Flux Measurements

Fast neutron flux measurements are obtained by insertion of threshold detectors into each of the six irradiation capsules. Such detectors are particularly suited for the proposed application because their effective threshold energies are in the range of interest (0.5 to 15 MeV).

These neutron threshold detectors and the thermal neutron detectors, presented in Table 5.3-5, can be used to monitor the thermal and fast neutron spectra incident on the test specimens. These detectors possess reasonably long half-lives and activation cross sections covering the desired neutron energy range.

Three sets of flux spectrum monitors are included in each capsule assembly. Each detector is placed inside a sheath that identifies the material and facilitates handling.

Cadmium covers are used for the materials with competing neutron capture activities. The flux monitors are placed in holes drilled in stainless steel housings, as shown in Figure 5.3-3, at three axial locations in each capsule assembly to provide an axial profile of the level of fluence that the specimens attain.

To determine the neutron fluence at the inner surface of the reactor vessel both of the measured value from detectors and the calculated value by transport theory are considered in accordance with NRC RG 1.190. Calculation methods for the neutron flux and fluence are described in Subsection 4.3.3.3.

5.3.1.6.4.2 Temperature Estimates

Because the changes in mechanical and impact properties of irradiated specimens are highly dependent on the irradiation temperature, it is necessary to have information on the specimens as well as the pressure vessel. During irradiation, instrumented capsules are not practicable for a surveillance program extending over the design lifetime of a power reactor. The maximum temperature of the irradiated specimens can be estimated with reasonable accuracy by including small pieces of low melting point alloys or pure metals in the capsule assemblies. The compositions of candidate materials with melting points in the operating range of power reactors are listed in Table 5.3-6. The monitors are selected to bracket the operating temperature of the reactor vessel. The temperature monitors consist of a helix of low melting alloy wire inside a sealed quartz tube. A stainless steel weight is provided to destroy the integrity of the wire when the melting point of the alloy is reached. The compositions and the melting temperatures of the temperature monitors are differentiated by the physical lengths of the quartz tubes that contain the alloy wires.

A set of temperature monitors is included in each capsule assembly. The temperature monitors are placed in holes drilled in stainless steel housings, as shown in Figure 5.3-3, and provide the maximum temperature to which the specimens are exposed.

5.3.1.6.5 Irradiation Locations

The test specimens are enclosed within six capsule assemblies. The axial positions of capsule assemblies are bisected by the midplane of the core as shown in Figure 5.3-6. A summary of the specimens contained in each of these capsule assemblies is presented in

Table 5.3-4. The test specimens contained in the capsule assemblies are used for monitoring the neutron-induced property changes of the reactor vessel materials. These capsules, therefore, are positioned near the inside wall of the reactor vessel so that the irradiation conditions (fluence, flux spectrum, temperature) of the test specimens resemble as closely as possible the irradiation conditions of the reactor vessel. The neutron fluence of the test specimens is expected to be approximately 1.5 times higher than that seen by the adjacent vessel wall, and the measured changes in properties of the surveillance materials are therefore able to predict the radiation induced changes in the reactor vessel beltline materials. The capsule assemblies are placed in capsule holders positioned circumferentially about the core at locations that include the regions of maximum flux. Figure 5.3-5 presents the typical exposure locations for the capsule assemblies in the plan view.

All capsule assemblies are inserted into their respective capsule holders during the final reactor assembly operation. The design also permits the remote installation of replacement capsule assemblies. The capsule holders are welded to the vessel cladding on the inside surface, and the welds are subject to inspection according to the requirements for permanent structural attachments as given in ASME Sections III and XI.

5.3.1.6.6 Withdrawal Schedule

The capsule assemblies remain within their holders until the specimens in the assemblies have been exposed to predetermined removal schedule based on effective full power years (EFPYs). At that time, the capsule assembly is removed, and the surveillance materials are evaluated. The target fluence levels for the surveillance capsules are determined at the azimuthal locations for the recommended withdrawal schedule of ASTM E185, extended to a design life of 60 years. The fluence values in Table 5.3-7 are accurate within +20 percent, –20 percent. The uncertainty is composed of errors in the calculational method and errors in the combined radial and axial power distribution.

Withdrawal schedules may be modified to coincide with the refueling outages or plant shutdowns most closely approaching the withdrawal schedule. The two standby capsules are provided in the event they are needed to monitor the effect of a major core change or annealing of the vessel or to provide supplemental toughness data for evaluating a flaw in the beltline.

5.3.1.6.7 Irradiation Effects Prediction Basis

Irradiation induced RT_{NDT} shift and reduction of upper shelf energy are predicted based on NRC RG 1.99, "Radiation Embrittlement of Reactor Vessel Materials." Predicted changes in RT_{NDT} and upper shelf energy are used to select the surveillance materials (see Subsection 5.3.1.6.1) and to formulate the initial heatup and cooldown limit curves for plant operation. When actual post-irradiation surveillance data become available for each reactor vessel, the data are used to adjust plant operating limit curves.

5.3.1.7 Reactor Vessel Fasteners

The bolting material for the reactor vessel closure head is fabricated from SA-540 B24, Class 3 material (Reference 27). This material conforms to the requirements of 10 CFR 50, Appendix G, and the intent of NRC RG 1.65, "Materials and Inspections for Reactor Vessel Closure Studs." Nondestructive examination is performed according to ASME Section III, NB-2580, during the manufacturing process. More information on NDE is described in Subsection 5.3.1.3.

Material for reactor vessel studs is tested in accordance with the requirements of SA-540 Grade B24 Class 3, ASME Section III, NB-2220 and NB-2300. The maximum measured yield strength of the reactor vessel closure stud bolting material SA-540, Grade B-24 will not exceed 1035 MPa (150 ksi). Charpy V-Notch testing is required to be performed at a temperature of 4.4 °C (40 °F) or lower. Each specimen of one test (consisting of three specimens) is required to exhibit a minimum of 0.635 mm (25 mils) lateral expansion and 68 Joules (45 ft-lbs) absorbed energy. These requirements also satisfy NRC RG 1.65 and 10 CFR 50, Appendix G, Paragraph IV A, at a temperature of 4.4 °C (40 °F) or lower, depending on the actual test temperature for the reactor vessel stud preload temperature or lowest service temperature, whichever is lower.

Actual material property values are reported on the certified material test reports (CMTRs) for the reactor vessel stud material.

The use of a manganese phosphate coating on threads of studs, nuts, and washers is specified to improve anti-galling properties and resistance to corrosion. In addition, a nickel-based high purity anti-seize lubricant is specified to be added to threads and bearing

surfaces at installation to further enhance anti-galling properties. Field experience to date has shown no evidence of deleterious breakdown of either phosphate coating or lubricant.

The stud holes in the vessel flange are protected from the refueling water using the seal plugs prior to refueling activity.

5.3.2 Pressure-Temperature Limits, Pressurized Thermal Shock, and Charpy Upper Shelf Energy Data and Analyses

All components in the RCS are designed to withstand the effects of cyclic loads due to RCS temperature and pressure changes. These cyclic loads are introduced by normal load transients, reactor trips, and startup and shutdown operation. The design number of cycles for heatup and cooldown is based on a rate of 55.6 °C/hr (100 °F/hr). During unit startup and shutdown, the rate of temperature change is limited to less than 55.6 °C/hr (100 °F/hr) by administrative procedure. The maximum allowable RCS pressure at the corresponding minimum allowable temperature is based upon the stress limitations for brittle fracture. These limitations are derived using linear elastic fracture mechanics principles, the procedures prescribed by ASME Section XI, Appendix G, "Fracture Toughness Criteria for Protection Against Failure," Appendix G to 10 CFR 50, "Fracture Toughness Requirements," NRC RG 1.99, "Radiation Embrittlement of Reactor Vessel Materials," 10 CFR 50.61, "Fracture Toughness Requirements for Protection Against Pressurized Thermal Shock Events," NRC SRP BTP 5-3, "Fracture Toughness Requirements," and the procedures recommended by Welding Research Council (WRC) Bulletin 175, "Pressure Vessel Research Committee (PVRC) Recommendations on Toughness Requirements for Ferritic Materials" (Reference 28). The reactor vessel is also designed, fabricated, erected, and tested to comply with the requirements of 10 CFR 50.55a, 10 CFR 50.60, and 10 CFR 50, Appendix A (GDC 1, 14, 31, and 32).

5.3.2.1 Pressure-Temperature Limitation Curves

5.3.2.1.1 Material Properties

Pressure-temperature limitations (P-T limits) are determined using material property test data for reactor coolant pressure boundary materials, as required by ASME Section XI, Appendix G. Based on considerations of existing material property test data, an initial

RT_{NDT} for the reactor vessel beltline material is –23.3 °C (–10 °F), and an initial RT_{NDT} for the remaining material of the reactor coolant system is –12.2 °C (10 °F). RT_{NDT} is determined in accordance with Article NB-2300 of ASME Section III.

As a result of fast neutron irradiation in the region of the core, the RT_{NDT} of irradiated material increases with operation. The maximum integrated neutron fluence on the reactor vessel wall beltline region is estimated to be 9.5×10^{19} n/cm^2. Because there are no longitudinal seal welds and circumferential seal welds are designed to be away from the center of the core belt, the forging material at the beltline is critical and is the only material that is evaluated. The techniques used to analytically and experimentally predict the integrated fast neutron ($E \geq 1$ MeV) fluxes of the reactor vessel are described in Subsection 5.3.1.6.

The shift in RT_{NDT} of reactor vessel beltline materials can be analytically predicted based on the procedures described in NRC RG 1.99 because the RCS operating temperature (cold leg) is 290.6 °C (555 °F), which is above 274 °C (525 °F) as shown in Table 5.1.1-1. The surveillance program is prepared to obtain the reliable irradiation data for the adjustment or qualification of operating parameters. Reactor vessel shell materials are designed to limit RT_{NDT} values at 1/4T location within 93.3 °C (200 °F) at the end-of-life. The RT_{NDT} values at the end-of-life are expected to be 21.1 °C (70 °F) per NRC RG 1.99 based on the weight percent of residual elements in Subsection 5.2.3.1.

The measured shift in RT_{NDT} for a specimen is applied to the adjacent section of the reactor vessel for later stages in plant life because the measured neutron spectra and flux at the specimen and reactor vessel inside the radius are close. The measured shift in RT_{NDT} is adjusted for the difference in calculated flux magnitudes between the surveillance specimens and the point of interest in the reactor vessel wall.

The maximum exposure to the reactor vessel is obtained from the measured exposure by application of the calculated azimuthal neutron flux variation. The neutron fluence and the actual shift in RT_{NDT} are established periodically during plant operation by testing the reactor vessel surveillance material specimens that are irradiated in capsules secured to the inside wall of the reactor vessel, as described in Subsection 5.3.1.6 and shown in Figures 5.3-5 and 5.3-6. Because surveillance materials are irradiated close to the inside surface of the vessel, the specimens demonstrate the accuracy of the RT_{NDT} shift prediction as well

as the effect of any additional long-term aging phenomenon. The P-T limits are then adjusted periodically, if necessary, to stay within allowable stress limits during normal operation.

5.3.2.1.2 Determination of Pressure-Temperature Limitation Curves

Figure 5.3-7 shows the pressure-temperature limitations determined in accordance with Appendix G of 10 CFR 50 for normal operation of the reactor coolant system. Details of P-T limit are described in the pressure and temperature limits report (PTLR) (Reference 29).

The P-T Limit curves are determined based on the following:

a. Minimum boltup temperature

The minimum boltup temperature is governed principally by ASME Section XI, Appendix G. The ASME Code requires that when the flange and adjacent shell regions are stressed by the full bolt preload and by pressure not exceeding 20 percent of the preoperational system hydrostatic test pressure, the minimum metal temperature in the stressed region must be at least the initial RT_{NDT} plus any effects of irradiation. From the assumptions that the initial RT_{NDT} for all regions of the RCS other than the beltline is –12.2 °C (10 °F) and that the flange and adjacent shell regions are not subjected to significant irradiation, the minimum boltup temperature per this requirement is –12.2 °C (10 °F). The minimum boltup temperature is taken conservatively to be 15.6 °C (60 °F).

b. Maximum pressure below the lowest service temperature (LST)

The maximum allowable pressure below the lowest service temperature is defined by ASME Section III, NB-2322(b), to be 20 percent of the preoperational hydrostatic test pressure. This test pressure is 125 percent of the design pressure (175.8 kg/cm^{2}A (2,500 psia)), or 219.7 kg/cm^{2}A (3,125 psia), and 20 percent of this value is 43.9 kg/cm^{2}A (625 psia). Therefore, the maximum pressure below the lowest service temperature is 43.9 kg/cm^{2}A (625 psia).

c. Minimum required temperature

The lowest service temperature (LST) is defined by ASME Section III, Article NB-2322(b), to be the minimum allowable temperature at pressures above 20 percent of the preoperational hydrostatic test pressure. This value is defined to be no lower than RT_{NDT} + 55.6 °C (100 °F), where the RT_{NDT} is considered to be for the most limiting component in the RCS other than the beltline. From the assumption that the initial RT_{NDT} for all regions of the RCS is –12.2 °C (10 °F), the LST per this requirement is –12.2 °C (10 °F) + 55.6 °C (100 °F) = 43.4 °C (110 °F) (actual fluid temperature at the beltline). However, minimum allowable temperature in accordance with the minimum temperature requirements in Table 1 of 10 CFR 50, Appendix G, is calculated as 54.4 °C (130 °F), which is higher than the LST and, therefore, is used as the minimum required temperature.

d. Operation, heatup, and cooldown curves

1) Reactor vessel beltline

P-T limits for the reactor vessel beltline are examined for heatup and cooldown conditions. For the heatup analysis, both the 1/4 thickness (1/4T) and 3/4T locations are examined. For heatup, the thermal stresses, σ_t are compressive at the inside surface and tensile at the outside surface. The membrane stresses due to pressure, σ_m are always tensile, but more so at the inside than outside surface. As a result, the total stress is always greater at the outside than the inside surface. However, the maximum allowable stresses, taking into account irradiation effects, decrease more at the inside than outside surface because the effects of irradiation are more pronounced there. It is not clear which surface stresses approach this maximum first. Therefore, both locations are examined for the heatup transient.

For the cooldown analysis, only the 1/4T location needs to be examined. During cooldown, the thermal stresses are tensile at the inside surface and compressive at the outside. Again, membrane stresses due to pressure are always positive. As a result, the total stress is always greater at the inside than the outside surface. Since the maximum allowable stresses, taking into account irradiation effects, decrease more at the inside than outside surface, it is clear that the total stress at the inside surface approaches the maximum

allowable before those at the outside surface. Therefore, only the 1/4T location needs to be examined for the cooldown transient.

Heatup and cooldown rates from 0 °C/hr (0 °F/hr) (i.e., isothermal pressurization) to the design limit of 55.6 °C/hr (100 °F/hr) are examined in determining the allowable heatup and cooldown rates as a function of temperature to meet LTOP requirements for the reactor coolant system. LTOP considerations are discussed in Subsection 5.2.2.10.

For the beltline analysis, during normal operations, the following condition is maintained:

$$K_{IC} = 2K_{Im} + K_{It}$$

Where:

K_{IC} = reference stress intensity factor specified by Figure G-2210-1 in ASME Section XI, Appendix G

K_{Im} = stress intensity factor for membrane stress due to pressure

K_{It} = stress intensity factor for thermal stress

K_{Im} = $\sigma_m M_m$

M_m = membrane correction factor defined in Figure G-221 4-1 in ASME Section XI, Appendix G

σ_m = (Pr)/t

For inside defect:

$K_{It} = 0.579 \times 10^{-6} \times CR \times t^{2.5}$ MPa·m$^{1/2}$ or

$K_{It} = 0.953 \times 10^{-3} \times CR \times t^{2.5}$ ksi·in$^{1/2}$

For outside defect:

$K_{It} = 0.458 \times 10^{-6} \times HU \times t^{2.5}$ MPa·m$^{1/2}$ or

$$K_{It} = 0.753 \times 10^{-3} \times HU \times t^{2.5} \quad ksi \cdot in^{1/2}$$

Where:

P = internal RV pressure

r = inside RV radius

t = RV wall thickness, mm (in)

CR = cooldown rate, °C/hr (°F/hr)

HU = heatup rate, °C/hr (°F/hr)

The right side of the above equation ($2K_{Im} + K_{It}$) is calculated for various pressures and then set equal to the left side (K_{IC}). The 2 represents a safety factor required by ASME Section XI, Appendix G. The minimum allowable temperature corresponding to a given pressure can then be calculated from this equation. The resulting combination represents a (maximum) pressure-(minimum) temperature limit that is not exceeded in order to provide reasonable assurance of non-brittle material behavior.

A set of such pressure-temperature coordinates defines a P-T limit curve for a specific heatup or cooldown rate at a particular point in plant life. Figure 5.3-7 illustrates typical P-T limits for the end-of-life of 60 years or 55.8 EFPYs (based on 93 percent capacity factor).

The pressure used in computing K_{Im}, and K_{It} and the corresponding computed temperature are for the crack tip. Correction factors for pressure and temperature are taken into account when expressing P-T limits graphically to show the limits in terms of indicated pressurizer pressure and indicated RCS temperature. This is done for P-T Limit curve presentation in the Technical Specifications (Chapter 16). The correction factors take into account the effects of instrument error, pressure differentials due to flow in the reactor coolant system, static pressure differentials due to elevation differences, and temperature differentials due to thermal gradients in the reactor vessel wall. The P-T limits shown in Figure 5.3-7 are in terms of indicated fluid conditions. K_{IC} is a function of the temperature, T, and the adjusted

reference temperature (ART) of the material at the cracktip. The analytical expression for K_{IC} is as follows:

$$K_{IC} = 36.5 + 22.783 \exp\{0.036(T - ART)\} \quad MPa \cdot m^{1/2} \quad \text{or}$$

$$K_{IC} = 33.2 + 20.734 \exp\{0.02(T - ART)\} \quad ksi \cdot in^{1/2}$$

The calculation of the ART is in accordance with the procedure described in NRC RG 1.99. The ART is a function of the initial RT_{NDT} of the material, the shift in RT_{NDT} due to irradiation over a period of time, ΔRT_{NDT}, and a safety margin. The equation for the ART is:

$$ART = (Initial)RT_{NDT} + \Delta RT_{NDT} + Margin$$

The shift, ΔRT_{NDT}, is calculated from:

$$\Delta RT_{NDT} = (CF)\ f^{(0.28\ -\ 0.10 \log f)}$$

where CF is a chemistry factor and f is the neutron fluence at the point of interest in the reactor vessel wall. The fluence, f, is calculated from the surface fluence, $f_{surface}$ (10^{19} n/cm^2, E >1 MeV), as

$$f = f_{surface}\ (e^{-0.24\ x}),\ n/cm^2$$

where x (in inches) is the depth into the RV wall.

The margin is calculated based on:

$$Margin = 2(\sigma_I^2 + \sigma_\Delta^2)^{1/2}$$

where σ_I is the standard deviation characteristic of the (Initial)RT_{NDT} data and σ_Δ is the standard deviation for ΔRT_{NDT} data as described in Regulatory Position C.1.1 of NRC RG 1.99. A value of zero is assigned to σ_I because a measured property is used to establish RT_{NDT}, not estimated values. The margin required to be added for uncertainties by NRC RG 1.99 is 16.8 °C (30.2 °F) for the vessel beltline base materials. However, to cover unanticipated long-term aging phenomena a margin of 27.8 °C (50 °F) for the

vessel beltline base materials is used for additional conservatism. Once confirmatory data are available from the reactor vessel surveillance program, the margin can be reduced in subsequent shift calculations consistent with the NRC RG 1.99.

2) Reactor vessel flange

P-T limits for the reactor vessel flange are examined for heatup and cooldown in accordance with the procedures in Article G-2220 in ASME Section XI, Appendix G. For the flange analysis, the following condition is maintained during normal operations:

$$K_{IC} = 2K_{I,\ primary} + K_{I,\ secondary}$$

Where:

$K_{I,\ primary}$ = $K_{m,\ pressure} + K_{m,\ boltup} + K_{b,\ boltup}$

$K_{I,\ secondary}$ = $K_{b,\ pressure} + K_t$

$K_{m,\ pressure}$ = stress intensity factor for membrane stress due to pressure

= $\sigma_{m,\ pressure} M_m$

$K_{m,\ boltup}$ = stress intensity factor for membrane stress due to boltup

= $\sigma_{m,\ boltup} M_m$

$K_{b,\ boltup}$ = stress intensity factor for bending stress due to boltup

= $\sigma_{b,\ boltup} M_b$

$\sigma_{m,\ pressure}$ = membrane (hoop) stress due to pressure

$\sigma_{m,\ boltup}$ = membrane stress due to boltup

$\sigma_{b,\ boltup}$ = bending stress due to boltup

M_m = membrane correction factor

M_b = bending correction factor

Where:

$K_{b,\ pressure}$	=	stress intensity factor for bending stress due to pressure
	=	$\sigma_{b,\ pressure} M_b$
$\sigma_{b,\ pressure}$	=	secondary bending stress due to pressure
K_t	=	stress intensity factor for thermal stress
	=	$M_b \sigma_t$
σ_t	=	thermal stress at the crack

The left side of the above equation (K_{IC}) is calculated for various temperatures; the right side is calculated as a function of pressure. The maximum allowable pressure corresponding to a given temperature can then be calculated from this equation. The resulting (maximum) pressure-(minimum) temperature coordinates define the flange P-T Limit for a specific heatup or cooldown, at a particular point in plant life. In no case is the flange minimum temperature limit allowed to be less than the flange RT_{NDT} + 66.7 °C (120 °F) during normal operation (when the pressure exceeds 20 percent of the preoperational system hydrostatic pressure), and RT_{NDT} + 50 °C (90 °F) during hydrostatic pressure tests and leak tests, in accordance with Appendix G of 10 CFR 50.

e. Preservice hydrostatic test limit

To comply with the recommendation of Article G-2400(1) in ASME Section XI, Appendix G, the preservice hydrostatic test is to be performed at an isothermal temperature no lower than RT_{NDT} + 33.3 °C (60 °F). Assuming an initial RT_{NDT} of –12.2 °C (10 °F) for all regions of the RCS, the preservice hydrostatic test limit is 21.1 °C (70 °F) (actual fluid temperature measured at the beltline).

f. Inservice leak and hydrostatic test curves

P-T limits for inservice leak and hydrostatic tests are developed in the same manner as for the RV beltline described in the preservice hydrostatic test limit.

The exception is that a safety factor of 1.5 is applied to the stress intensity factor for membrane stress due to pressure, K_{Im}, rather than 2, as allowed by Article G-2400(2) in ASME Section XI, Appendix G.

g. Core critical curves

The core critical curve is intended to provide additional margins of safety during core operation. The limit is defined as 22.2 °C (40 °F) above the minimum allowable temperature for heatup or cooldown and no less than the minimum temperature allowable for inservice hydrostatic pressure test, in accordance with Appendix G of 10 CFR 50.

The COL applicant is to develop P-T Limit curves based on plant-specific data (COL 5.3(2)).

5.3.2.2 Operating Procedures

Details of the limiting condition for operations related to the RCS P-T limits and its bases are specified and described in Subsections 3.4.3 and B3.4.3 of Chapter 16 (Technical Specifications and Bases). The P-T Limit curves that are provided were prepared in accordance with Appendix G of ASME Section XI.

The reactor coolant system pressure and temperature are maintained within the prescribed P-T limits, which provides reasonable assurance that the integrity of reactor coolant pressure boundary can be maintained.

5.3.2.3 Pressurized Thermal Shock

The reactor vessel meets the requirements of 10 CFR 50.61 (Reference 30), and NRC SRP BTP 5-3 (i.e., the PTS screening criteria are not projected to be exceeded by expiration of the operations).

RT_{PTS} is evaluated using the procedure described in 10 CFR 50.61, which is provided below.

RT_{PTS} = (Initial) RT_{NDT} + ΔRT_{PTS} + Margin

The calculated RT_{PTS} is 21.2 °C (70.2 °F) for the vessel beltline base materials, which satisfies the screening criteria in 10 CFR 50.61(b)(2).

This number has been calculated with the following assumptions:

a. The maximum initial RT_{NDT} for the vessel beltline materials is –23.3 °C (–10 °F).

b. The maximum integrated fast neutron flux exposure of the reactor vessel wall opposite the midplane of the core is less than 9.5×10^{19} n/cm^2. The adjustment in the reference temperature caused by irradiation (ΔRT_{PTS}) is 16.8 °C (30.2 °F) for the vessel beltline base materials. This calculated value assumes a maximum copper content of 0.03 percent by weight, and a maximum nickel content of 1.00 percent by weight in the forgings.

c. The margin required to be added for uncertainties per 10 CFR 50.61 is 16.8 °C (30.2 °F) for the vessel beltline base materials. However, a margin of 27.8 °C (50 °F) for the vessel beltline base materials is used for additional conservatism.

The COL applicant is to verify the RT_{PTS} value based on plant-specific material property and neutron fluences (COL 5.3(3)).

5.3.2.4 Upper-Shelf Energy

In accordance with 10 CFR 50, Appendix G, Paragraph IV A, and NRC SRP BTP 5-3, the reactor vessel beltline materials must have the minimum upper-shelf energy (USE) of 102 Joules (75 ft-lbs) initially and must maintain USE values of 68 joules (50 ft-lbs) through the life of the reactor vessel. The initial USE is determined from Charpy V-notch tests on unirradiated specimens in accordance with ASME Section III, NB-2320. Charpy impact tests are performed on transversely (weak direction) oriented specimens from the beltline forgings.

The change in the USE due to radiation embrittlement can be predicted in accordance with NRC RG 1.99 because the operating temperature (cold leg) is 290.6 °C (555 °F), which is higher than 274 °C (525 °F) as shown in Table 5.1.1-1.

Even with the limiting value of 102 Joules (75 ft-lbs) assumed for the initial USE, the end-of life (EOL) USE is estimated to be 69.4 Joules (51 ft-lbs), which is higher than the limiting EOL value of 68 Joules (50 ft-lbs) based on the maximum neutron fluence of 9.5×10^{19} n/cm^2, and maximum copper content of 0.03 percent by weight for forging materials, as assumed in subsection 5.3.2.3. Previous data on the OPR1000 reactor vessel materials show that initial USE values are well above 200 joules (147 ft-lbs), and actual EOL values of USE are therefore expected to be much higher than 68 Joules (50 ft-lbs).

The COL applicant is to verify the USE at EOL based on plant-specific material property and neutron fluences (COL 5.3(3)).

5.3.3 Reactor Vessel Integrity

Reasonable assurance of vessel integrity is provided because proven fabrication techniques are used and because well-characterized steels, which exhibit uniform properties and consistent behavior, are used. The characterization of these materials was established through industrial and governmental studies that examined the prefabrication material properties through irradiated service operation. Inservice inspection and material surveillance programs are also conducted during the service life of the vessel, which provide further reasonable assurance that vessel integrity is maintained. The reactor vessel material satisfies the screening criteria in 10 CFR 50.61 as described in Subsection 5.3.2.3, so reasonable assurance of the reactor vessel integrity against pressurized thermal shock events is provided. The reactor vessel is also designed, fabricated, erected, and tested to comply with the requirements of 10 CFR 50, Appendix A (GDC 1, 4, 14, 30, 31, and 32), 10 CFR 50.60, 10 CFR 50.55a, and 10 CFR 50, Appendices G and H.

5.3.3.1 Design

Table 5.2-1 contains the applicable design codes. A schematic of the reactor vessel is shown in Figure 5.3-8. Additional information on the design is provided in Subsection 5.3.1.2. The design permits all required inspections to be performed and does not

preclude access to areas requiring inservice inspection in conformance with ASME Section XI, as detailed in Subsection 5.2.4.

Reactor Vessel

The reactor vessel is designed to operate for 60 years. The design temperature and pressure are 343.3 °C (650 °F) and 175.8 kg/cm^{2}A (2,500 psia), respectively.

The vessel consists of a vessel flange, three cylindrical shell sections (upper, intermediate, and lower), and a bottom head. The upper shell section with the vessel flange, intermediate and lower shell sections, and bottom head forging are welded together to form a complete vessel assembly. There is no weld in the core beltline region, which enhances the performance of brittle fracture prevention.

The vessel flange is a forged ring with a machined ledge on the inside surface for supporting the reactor vessel internal (RVI) and the core. In addition, four keyways are machined on the ledge to accommodate the RVI alignment keys. The flange is machined to provide a mating surface for the reactor vessel closure seals and is drilled and tapped to engage the closure studs.

The bottom head is a single hemispherical forging. The bottom head contains 61 ICI penetration nozzles and four external shear key supports that mate with the keyway in the RV support column base plate. A flow skirt is also attached inside the bottom head. The flow skirt is a right circular cylinder and is located in the reactor vessel lower head below the RVI. Flow holes in the skirt are distributed to direct and make a uniform coolant flow to the core.

The closure head is fabricated separately and is joined to the reactor vessel by bolting. The closure head consists of a head flange, a dome, and 101 CEDM nozzles including (8 spare nozzles, 2 heated junction thermocouple (HJTC) nozzles, a reactor coolant gas vent system (RCGVS) line and pads for the integrated head assembly (IHA). The head flange is a forged ring and is drilled to match the vessel flange stud holes, and the lower surface of the flange is machined to provide a mating surface for the vessel closure seals. The dome is a single hemispherical forging.

The 54 closure stud bolts screw into the tapped holes in the vessel flange, and the nuts installed on the closure head are screwed onto the studs to provide a compressive load on the head for sealing. To provide uniform loading, the studs are hydraulically tensioned with the pre-load in the prescribed sequence.

Reasonable assurance is provided by the RV sealing by the use of two silver- plated NiCrFe alloy O-rings between the vessel and closure head flanges. The O-rings are hollow with openings to accommodate reactor coolant pressure. This configuration results in a self-energized seal that gets tighter as system pressure increases. The outer ring acts as a backup for the inner ring. A connection to the space between the seals is provided to monitor the integrity of the seals.

The core stop lugs are installed on the internal surface of the reactor vessel bottom head to catch the core and RVI in the event of normal support failures.

The core stop lugs and flow skirt are arranged to minimize resistance to the flow and not to interfere with the core stabilizing lug shim installation.

The core stabilizing lugs, which function to limit the horizontal movement of the core and RVI, are also installed on the internal surface of the reactor vessel lower shell.

The external seal ledge of the RV flange provides the mating surface for the reactor cavity pool seal, which provides the bottom surface of the cavity to fill water for refueling operation.

Reactor Vessel Supports

The RV is supported by four vertical columns located under the vessel inlet nozzles. A nozzle foot with a flange under each inlet nozzle provides a surface to which the column is bolted. The flange also acts as a horizontal key to positively locate the vertical centerline of the RV. The key is designed to mate with the building structure and allows free radial growth of the RV during thermal expansion while supporting the vessel horizontally during an earthquake, a postulated pipe break, and IRWST discharge.

The bottom of each column ends in a base plate drilled to accept anchor bolts. Preloaded anchor bolts are the mechanism by which column loads are transmitted to the building structure. The base plate also acts as a keyway for the shear key welded on the RV bottom head. The key and keyway provide horizontal support and limit motion of the bottom head due to an earthquake, postulated pipe break, and IRWST discharge.

Reactor Vessel Nozzles

There are two 106.7 cm (42 in) ID primary outlet nozzles and four 76.2 cm (30 in) ID primary inlet nozzles spaced equally around the vessel and welded to the intermediate shell of the RV. Each of four inlet nozzles has one foot below the nozzle attached with a bolting pad that serves as the support interfaces.

Four 21.6 cm (8.5 in) ID direct vessel injection (DVI) nozzles are welded to the intermediate shell above the centerline of the inlet and outlet nozzles to which the safety injection system (SIS) pipes are connected.

Sixty-one ICI nozzles are fitted in the bottom head penetration holes. They are welded by J-groove welds with NiCrFe alloy on the bottom head.

One hundred and one CEDM nozzles and two HJTC nozzles are fitted in the closure head penetration holes. They are welded by J-groove weld with NiCrFe alloy on the closure head.

5.3.3.2 Materials of Construction

The materials used in the construction of the reactor vessel, as listed in Table 5.2-2, are in accordance with ASME Section III. Detailed information about the reactor vessel materials including weld materials are described in Subsections 5.2.3 and 5.3.1.

Material requirements of ASME Section III NB and the applicable ASME Section II material specifications are applied to reactor vessel pressure boundary materials. The materials satisfy the fracture toughness requirements of 10 CFR 50, Appendix G. In addition, weld materials satisfy applicable ASME Section IX requirements.

The reactor vessel closure head and upper, intermediate, and lower shells including flanges, bottom head dome, and major nozzles are low-alloy steel that conforms to ASME Section II SA-508 Grade 3, Class 1. Austenitic stainless steel or nickel base alloy are used for the cladding materials of the reactor vessel.

The reactor vessel stud bolts are described in Subsections 5.3.1.7 and 5.3.3.8.

Material selection for reactor vessel is based on a consideration of strength, fracture toughness, fabrication, radiation embrittlement characteristics, operating experiences, and compatibility in the PWR environmental condition.

Appropriateness of the material that has been selected has been proven by successful long-term operating experience of reactor vessels at Korean nuclear power plants as well as experience throughout the world.

5.3.3.3 Fabrication Methods

Fabrication of the reactor vessel is described in Subsection 5.3.1.2. Fabrication processes used in the construction of the reactor vessel comply with ASME Section III and ASME NQA-1. No special manufacturing methods that could compromise the integrity of the reactor vessel are used.

More than 10 reactor vessels in operation for many years or those being constructed in Korea were and are fabricated using similar processes.

The reactor vessel is a vertically mounted cylindrical vessel with a hemispherical lower head welded to the vessel and a removable hemispherical upper closure head. Fabrication of the reactor vessel is based on drawings, fabrication procedures, and examination procedures in accordance with ASME Section III requirements. The reactor vessel shell consists of three shell sections (upper, intermediate, and lower) and a lower head. The length of each shell is adjusted so that the shell does not include the welds in the active core region.

The reactor vessel shells are joined by circumferential welds. Welding procedures applied to the welds of the reactor vessel pressure boundary are qualified in accordance with ASME Section III and Section IX requirements.

Welding processes such as GTAW, SMAW, FCAW, and SAW are used for the reactor vessel. Electroslag welding is not used for the reactor vessel. Detailed information on the welding of reactor vessel is described in Subsection 5.3.1.2.

Other fabrication processes including cutting, bending, drilling, and forming are performed in accordance with manufacture's procedures and/or instructions.

5.3.3.4 Inspection Requirements

Nondestructive examinations (NDE) performed on the reactor vessel in accordance with ASME Section III are described in Subsection 5.3.1.3.

Ultrasonic examination, and magnetic particle or liquid penetrant methods are performed for reactor vessel pressure boundary forgings and stud bolts in accordance with the requirements of ASME Section III and Section V(Reference 31), as applicable.

Pressure boundary welds of the reactor vessel are examined according to ASME Section III, and satisfy applicable acceptance requirements of ASME Section III. Examinations are performed in accordance with the methods in ASME Section V, if required by ASME Section III.

5.3.3.5 Shipment and Installation

The requirements of ASME NQA-1 (Reference 32) are followed for the packaging and shipment of the reactor vessel. Reactor vessels are prepared to be shipped by barge or rail to the site while mounted on the shipping skid used for installation. The vessels are protected by closing all openings (including the top of the vessel) with shipping covers. The closure heads are shipped with separate skids and covers. Vessel surfaces and covers are sprayed with a strippable coating or wrapped with shrink-wrap for protection against corrosion during shipping and installation.

Following the application of the removable coating or equivalent protection material on the interior surface and prior to wrapping or coating the exterior, all openings are sealed to provide protection against dust, moisture, and/or detrimental materials during shipment and storage at the site.

After the removable coating or equivalent protection material is applied, a desiccant is applied to the interior of the closure head in the area surrounding the nozzles, and the openings in the cover are resealed.

The reactor vessel is cleaned and protected from contamination prior to shipment as described in Subsection 5.3.1.4. Additional information on cleanliness and protection against contamination for austenitic stainless steel materials is provided in Subsection 5.2.3.4.

After arrival at the site and prior to installation, all covers, plugs, and similar items are left in place until they are installed unless otherwise specified. Prior to the welding of interconnecting piping and installation of insulation, the temporary protection material is removed. Only enough strippable protection material for installation requirements is removed. The balance remains in place until just prior to installation of the insulation of the reactor vessel.

The insulation for the reactor vessel is designed to have an annular flow path suitable for the external reactor vessel cooling (ERVC) operation during a severe accident.

5.3.3.6 Operating Conditions

Refer to Sections 3.9 and 4.4 for information on design transients and operating conditions, respectively. Pressure-temperature limitations (P-T limits) and protection against pressurized thermal shock issues for the reactor vessel are described in Subsection 5.3.2. P-T limits, which are described in Subsection 5.3.2.1, meet the requirements of 10 CFR 50 Appendix G, “Fracture Toughness Requirements,” during operating conditions such as hydrostatic pressure tests or normal operation including anticipated operational occurrences.

Reactor vessel integrity is verified for events or transients causing severe overcooling concurrent with or followed by significant pressure called pressurized thermal shock (PTS).

For such an event of the reactor vessel beltline base metals, the reactor vessel integrity satisfies the PTS screening criteria in 10 CFR 50.61, which is described in Subsection 5.3.2.3.

5.3.3.7 Inservice Surveillance

Inservice Inspection

ASME Section XI requirements are followed for inservice inspection of the reactor vessel. Preservice inspections are also conducted after installation in accordance with applicable ASME Section III and Section XI requirements.

Inservice inspection for the APR1400 is described in Subsection 5.2.4. A detailed list of inservice and preservice inspections for the reactor vessel is described in Table 5.3-8 and Table 5.3-9. The COL applicant is to provide and develop the inservice inspection and testing program for the RCPB, in accordance with ASME Section XI and 10 CFR 50.55a (COL 5.3(4)). The inservice inspection plan is implemented every 10 years. Accessibility to equipment for maintenance, testing, and inspection is a basic element of the APR1400 design process.

The outer surface of closure head and closure head nozzles beyond the peripheral nozzles can be accessed by removing the head removable insulation panels. Visual inspections around each nozzle on the head surface can also be applied using remote inspection devices. The head insulation is to maintain the gap from the surface of top head by approximately 2.5 inches to allow access for the inspection devices. The closure head is available for inspection whenever it is removed, and its removal makes available the vessel closure flange, the flange-to-shell weld, closure stud holes and ligaments, and the closure studs and nuts. Each control element drive mechanism is removable as a unit through a closure at the top of its housing. Because many of the reactor vessel closure head examinations are done from the underside of the head, the head laydown area provides access for examinations.

The closure head stud bolts, nuts, and washers are inspected periodically using visual magnetic particle and/or ultrasonic examinations.

All internals of the reactor vessel (which is an open structure offering insignificant impediment to access) are removable, making the entire inner surface of the vessel including the beltline welds, and the weld zones of the internal load-carrying structure attachments, available for the required surface and volumetric inspections. For interim inspections of the vessel, nozzle-to-shell welds and inner radii of the outlet nozzles are accessible from inside the reactor vessel by using remote automated equipment without removing the vessel internals.

The outside surface of the bottom head of the reactor pressure vessel is manually examined from outside of the vessel, and an access tunnel is therefore provided to allow personnel into the area below the bottom head. Insulation is provided by removable panels over the bottom head weld seams.

Material Surveillance Program

The reactor vessel surveillance program conforms to the requirements of Appendix H of 10 CFR 50 and ASME Section XI as described in Subsection 5.3.1.6. The design of the program is based on ASTM E185.

Tensile test specimens and Charpy impact test specimens are included to corroborate the post-irradiation surveillance data and fracture toughness specimens to enable determination of fracture toughness properties before and after irradiation. The number of standard Charpy specimens that are required by ASTM E185 are included in reactor surveillance program to increase the accuracy in defining post-irradiation index temperatures.

When combined with the use of highly radiation-resistant materials in the beltline of the reactor vessel, the surveillance program provides reasonable assurance of the integrity of the reactor vessel in terms of strength and fracture resistance.

5.3.3.8 Threaded Fasteners

The bolting material for the reactor vessel closure head is fabricated from SA 540 B24 Class 3 material. This material conforms to the requirements of 10 CFR 50, Appendix G and the intent of NRC RG 1.65 (Reference 33). Nondestructive examination is performed according to ASME Section III, NB-2580, during the manufacturing process.

Detailed information concerning the reactor vessel stud bolts and examinations applied to provide reasonable assurance of the integrity of the bolts is provided in Subsections 5.3.1.7 and 3.13.

The reactor vessel bolting materials that are used to provide reasonable assurance of the integrity of bolts are described in Subsection 5.3.1.7 and Section 3.13.

5.3.4 Combined License Information

COL 5.3(1) The COL applicant is to provide a reactor vessel material surveillance program for a specific plant.

COL 5.3(2) The COL applicant is to develop P-T Limit curves based on plant-specific data.

COL 5.3(3) The COL applicant is to verify the RT_{PTS} value and the USE at EOL based on plant-specific material property and neutron fluences.

COL 5.3(4) The COL applicant is to provide and develop the inservice inspection and testing program for the RCPB, in accordance with ASME Section XI and 10 CFR 50.55a.

5.3.5 References

1. 10 CFR 50, Appendix A, "General Design Criteria for Nuclear Power Plant," NRC Regulations Title 10.

2. 10 CFR 50.55a, "Codes and Standards," NRC Regulations Title 10.

3. 10 CFR 50.60, "Acceptance Criteria for Fracture Prevention Measures for Light Water Nuclear Power Reactors for Normal Operation" NRC Regulations Title 10.

4. 10 CFR 50, Appendix B, "Quality Assurance Criteria for Nuclear Power Plants and Fuel Reprocessing Plants," NRC Regulations Title 10.

5. 10 CFR 50, Appendix G, "Fracture Toughness Requirements," NRC Regulations Title 10.

6. 10 CFR 50, Appendix H, "Reactor Vessel Material Surveillance Program Requirements," NRC Regulations Title 10.

7. NRC SRP, Branch Technical Position 5-3, "Fracture Toughness Requirements," Revision 2, March 2007.

8. ASME Boiler and Pressure Vessel Code, Section III, "Rules for Construction of Nuclear Power Plant Components," 2007 Edition with 2008 Addenda.

9. NRC RG 1.50, "Control of Preheat Temperature for Welding of Low-Alloy Steel," Revision 1, March 2011.

10. ASME Boiler and Pressure Vessel Code, Section XI, "Rules for Inservice Inspection of Nuclear Power Plant Components," 2007 Edition with 2008 Addenda.

11. NRC RG 1.31, "Control of Ferrite Content in Stainless Steel Weld Metal," Revision 3, April 1978.

12. NRC RG 1.34, "Control of Electroslag Weld Properties," Revision 1, March 2011.

13. NRC RG 1.37, "Quality Assurance Requirements for Cleaning of Fluid Systems and Associated Components of Water-Cooled Nuclear Power Plants," Revision 1, March 2007.

14. NRC RG 1.43, "Control of Stainless Steel Weld Cladding of Low-Alloy Steel Components," Revision 1, March 2011.

15. NRC RG 1.44, "Control of the Processing and Use of Stainless Steel," Revision 1, March 2011.

16. NRC RG 1.71, "Welder Qualification for Area of Limited Accessibility," Revision 1, March 2007.

17. NRC RG 1.99, "Radiation Embrittlement of Reactor Vessel Materials," Revision 2, May 1988.

18. NRC RG 1.190, "Calculational and Dosimetry Methods for Determining Pressure Vessel Neutron Fluence," Revision 0, March 2001.

19. ASTM E185, “Design of Surveillance Programs for Light-Water Moderated Nuclear Power Reactor Vessels,” 1982.

20. ASTM E208, “Standard Test Method for Conducting Drop-Weight Test to Determine Nil-Ductility Transition Temperature of Ferritic Steels,” Revision A, 1995.

21. ASTM E23, “Standard Test Methods for Notched Bar Impact Testing of Metallic Materials,” Revision A, 1995.

22. ASTM A370, “Standard Test Methods and Definitions for Mechanical Testing of Steel Products,” 2005.

23. ASTM E8/8M, “Standard Test Methods for Tension Testing of Metallic Materials,” 2009.

24. ASTM E21, “Standard Test Methods for Elevated Temperature Tension Tests of Metallic Materials,” 2009.

25. ASTM E1820, “Standard Test Method for Measurement of Fracture Toughness,” Revision A, 2005.

26. ASTM E1921, “Standard Test Method for Determination of Reference Temperature, To, for Ferritic Steels in the Transition Range,” 2010.

27. ASME Boiler and Pressure Vessel Code, Section II, “Materials,” SA-540 "Specification for Alloy-Steel Bolting Materials for Special Applications,” 2007 Edition with 2008 Addenda.

28. Welding Research Council Bulletin 175, “Pressure Vessel Research Committee (PVRC) Recommendations on Toughness Requirements for Ferritic Materials,” Welding Research Council, PVRC Ad Hoc Group on Toughness Requirements, August 1972.

29. APR1400-Z-M-NR-13010-P, “Pressure-Temperature Limits Methodology for RCS Heatup and Cooldown,” Revision 0, September 2013.

30. 10 CFR 50.61, “Fracture Toughness Requirements for Protection Against Pressurized Thermal Shock Events,” NRC Regulations Title 10.

31. ASME Boiler and Pressure Vessel Code, Section V, “Nondestructive Examination,” 2007 Edition with 2008 Addenda.

32. ASME Boiler and Pressure Vessel Code, NQA-1, “Quality Assurance Requirements for Nuclear Facility Applications,” 2008 Edition with 2009 Addenda.

33. NRC RG 1.65 “Materials and Inspections for Reactor Vessel Closure Studs,” Revision 1, April 2010.

Table 5.3-1

Total Quantity of Specimens

Type of Specimen	Orientation	Number of Specimens			
		Base Metal	Weld Metal	HAZ(1)	Total
Drop weight	Transverse	12	12	12	36
Standard Charpy	Longitudinal	114	—	—	114
	Transverse	114	114	114	342
Precracked Charpy	Longitudinal	66	—	—	66
	Transverse	66	66	—	132
Compact tension	1T longitudinal	4	—	—	4
	1/2T longitudinal	28	—	—	28
	1T transverse	8	8	—	16
	1/2T transverse	28	28	—	56
Tensile test	Longitudinal	30	—	—	30
	Transverse	30	30	—	60
	Total	500	258	126	884

(1) Heat affected zone

Table 5.3-2

Type and Quantity of Specimens for Baseline Tests

Type of Specimen	Orientation	Number of Specimens			
		Base Metal	Weld Metal	HAZ(1)	Total
Drop weight	Transverse	12	12	12	36
Standard Charpy	Longitudinal	24	—	—	24
	Transverse	24	24	24	72
Precracked Charpy	Longitudinal	12	—	—	12
	Transverse	12	12	—	24
Compact tension	1T longitudinal	4	—	—	4
	1/2T longitudinal	4	—	—	4
	1T transverse	8	8	—	16
	1/2T transverse	4	4	—	8
Tensile test	Longitudinal	12	—	—	12
	Transverse	12	12	—	24
	Total	128	72	36	236

(1) Heat affected zone

Table 5.3-3

Type and Quantity of Specimens for Irradiated Tests

Type of Specimen	Orientation	Number of Specimens			
		Base Metal	Weld Metal	HAZ(1)	Total
Standard Charpy	Longitudinal	90	—	—	90
	Transverse	90	90	90	270
Precracked Charpy	Longitudinal	54	—	—	54
	Transverse	54	54	—	108
Tensile test	Longitudinal	18	—	—	18
	Transverse	18	18	—	36
1/2T Compact Tension	Longitudinal	24	—	—	24
	Transverse	24	24	—	48
	Totals	372	186	90	648

(1) Heat affected zone

Table 5.3-4

Type and Quantity of Specimens Contained in Each Irradiation Capsule Assembly

Type of Specimen	Number of Specimens				
	Standard Charpy	1/2T CT	Precracked Charpy	Tension	Total
Base metal (longitudinal)	15	4	9	3	31
Base metal (transverse)	15	4	9	3	31
Weld metal	15	4	9	3	31
Heat affected zone	15	—	—	—	15
Total	60	12	27	9	108

Table 5.3-5

Material for Neutron Threshold Detectors

Material	Reaction	Threshold Energy (MeV)	Half-Life
Niobium	^{93}Nb (n,n`) ^{93m}Nb	0.5	16.4 years
Neptunium	^{237}Np (n,f) ^{137}Cs	0.5	30.2 years
Uranium	^{238}U (n,f) ^{137}Cs	1.5	30.2 years
Iron	^{54}Fe (n,p) ^{54}Mn	2.2	312.5 days
Nickel	^{58}Ni (n,p) ^{58}Co	2.1	70.78 days
Copper	^{63}Cu (n,α) ^{60}Co	5.0	5.27 years
Titanium	^{46}Ti (n,p) ^{46}Sc	4.4	83.83 days
Cobalt	^{59}Co (n,γ) ^{60}Co	Thermal	5.27 years

Table 5.3-6

Composition and Melting Points
of Candidate Materials for Temperature Monitors

Composition, wt %	Melting Temperature, °C (°F)
Cd – 17.4 Zn	266 (511)
Au – 20.0 Sn	280 (536)
Pb – 2.5 Ag	304 (580)
Pb – 1.75 Ag – 0.75 Sn	310 (590)

Table 5.3-7

Capsule Assembly Removal Schedule

Capsule	Azimuthal Location	Removal Time(1)	Target Fluence (n/cm^2)
A	217 °	6 EFPY	—
B	37 °	15 EFPY	—
C	224 °	32 EFPY	—
D	323 °	EOL	9.5×10^{19}(2)
E	44 °	Standby	—
F	143 °	Standby	—

(1) Schedule may be modified to coincide with the refueling outages or scheduled shutdowns most closely approximating the withdrawal schedule.

(2) Expected fluence level at the end of the plant design life (interface between reactor wall and cladding)

Table 5.3-8

Inspection Plan for Reactor Vessel Materials

	Requirements			
	Procurement	Manufacturing	Preservice	Inservice
Forgings : Shell and Flange	MT UT	MT(1)	–	–
Forgings : Closure Head	MT UT	MT(1)	VT(2)	VT(2)
Stud Bolts, Nuts and Washers	MT UT	MT(1)	UT(3) VT(3)	UT(3) VT(3)
Forgings : Vessel Nozzle	MT UT	MT(1)	–	–
Closure Head Nozzle	PT UT	PT(1)	ECT(4)	–
Closure Head Vent Pipe	PT UT	PT(1)	ECT(4)	–
Attachments : Ferritic Material	UT and MT	MT(1)	–	–
Attachments : Stainless Steel and A690 Alloy	UT and PT	PT(1)	–	–

(1) Only for machined surfaces

(2) Only for closure head dome portion

(3) UT applicable for stud bolts, VT applicable for nuts and washers
for stud bolts: UT
for nuts and washers: VT

(4) Only for inner surfaces of Alloy 690 materials

Table 5.3-9

Inspection Plan for Reactor Vessel Welds

—	Requirements		
	Manufacturing	Preservice	Inservice
Full penetration welds : Pressure boundary ferritic forgings	RT UT MT	UT PT(1)	UT PT(1)
J-groove welds and vent pipe head nozzles	PT(2)	ECT	ECT
DVI nozzle to safe end welds	RT UT PT	UT PT	UT PT
Attachment welds to pressure boundary	MT or PT	—	—
Cladding	UT PT	VT	VT

(1) Only for closure head to flange welds

(2) Every 1.3 cm (0.5 in) thickness of weld and final weld surface

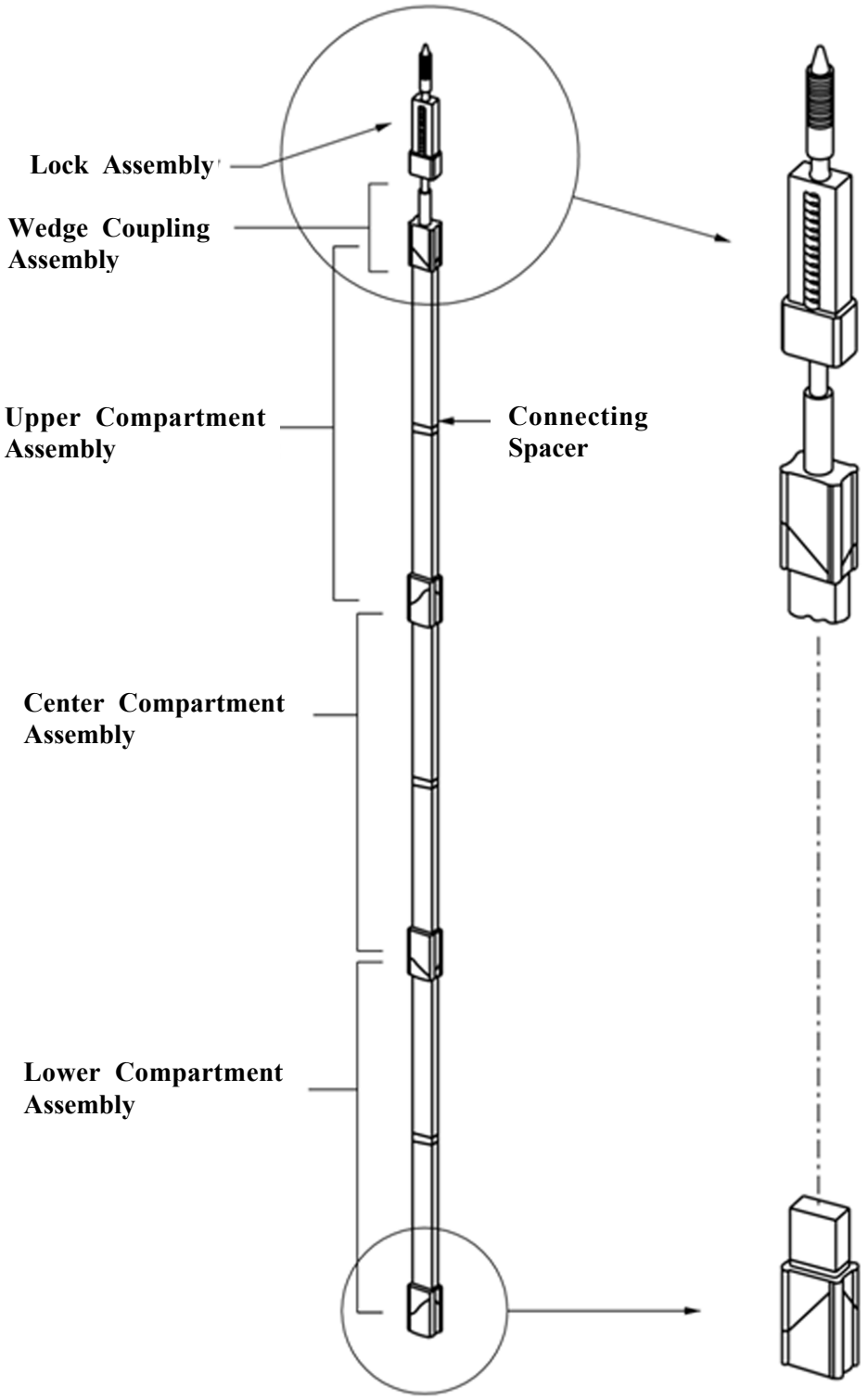

Figure 5.3-1 Typical Surveillance Capsule Assembly

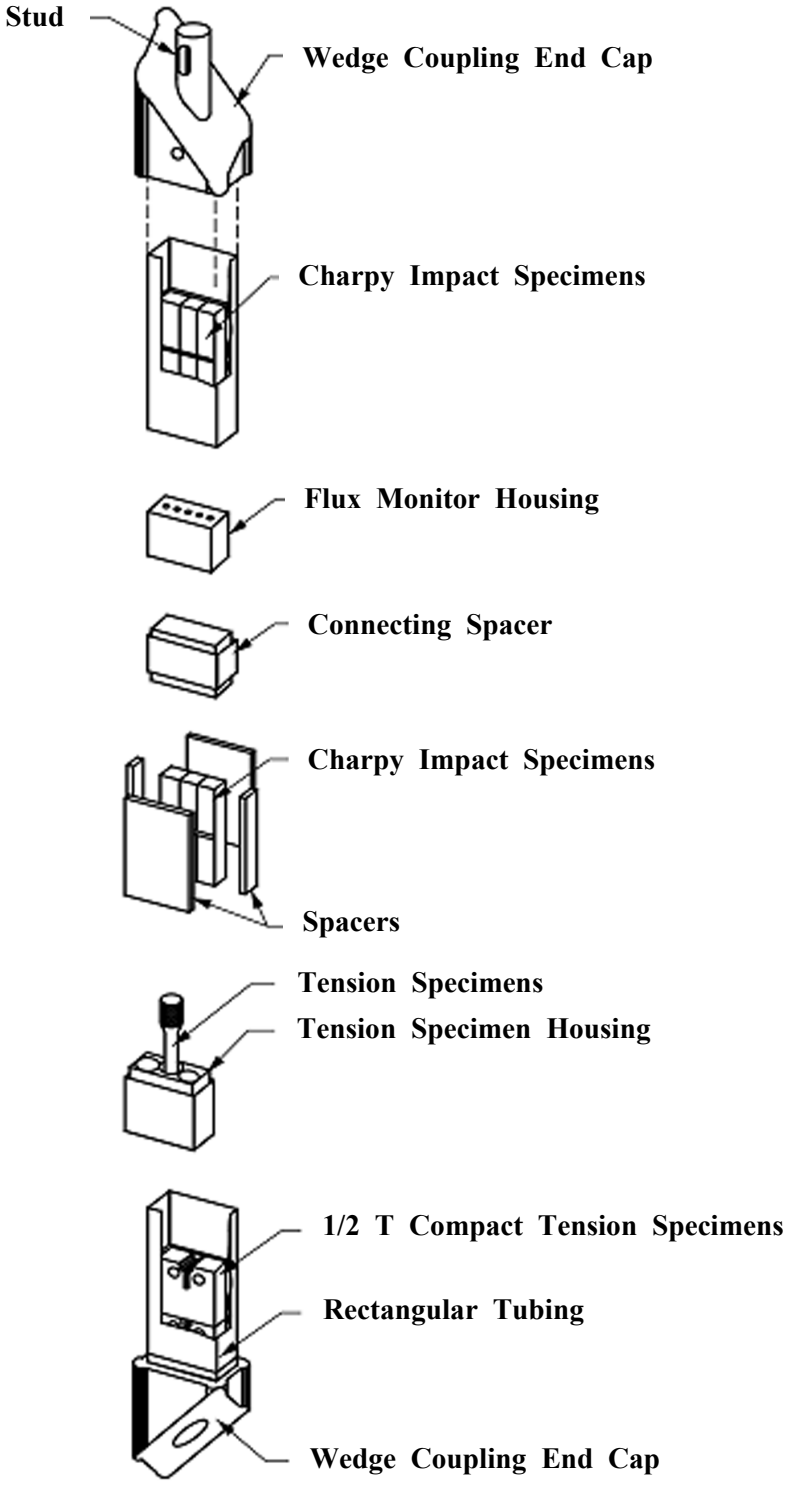

Figure 5.3-2 Upper Compartment Assembly

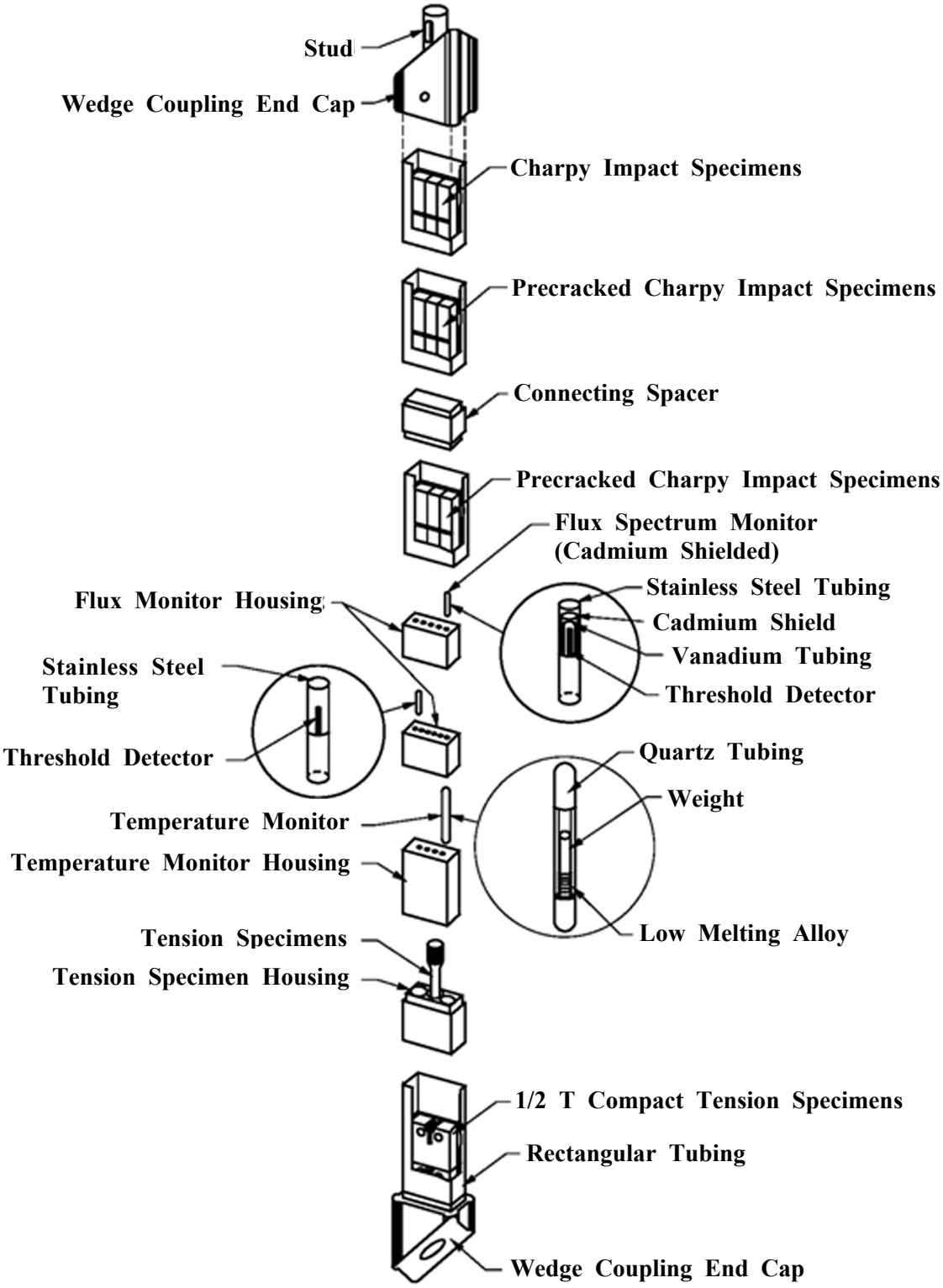

Figure 5.3-3 Center Compartment Assembly

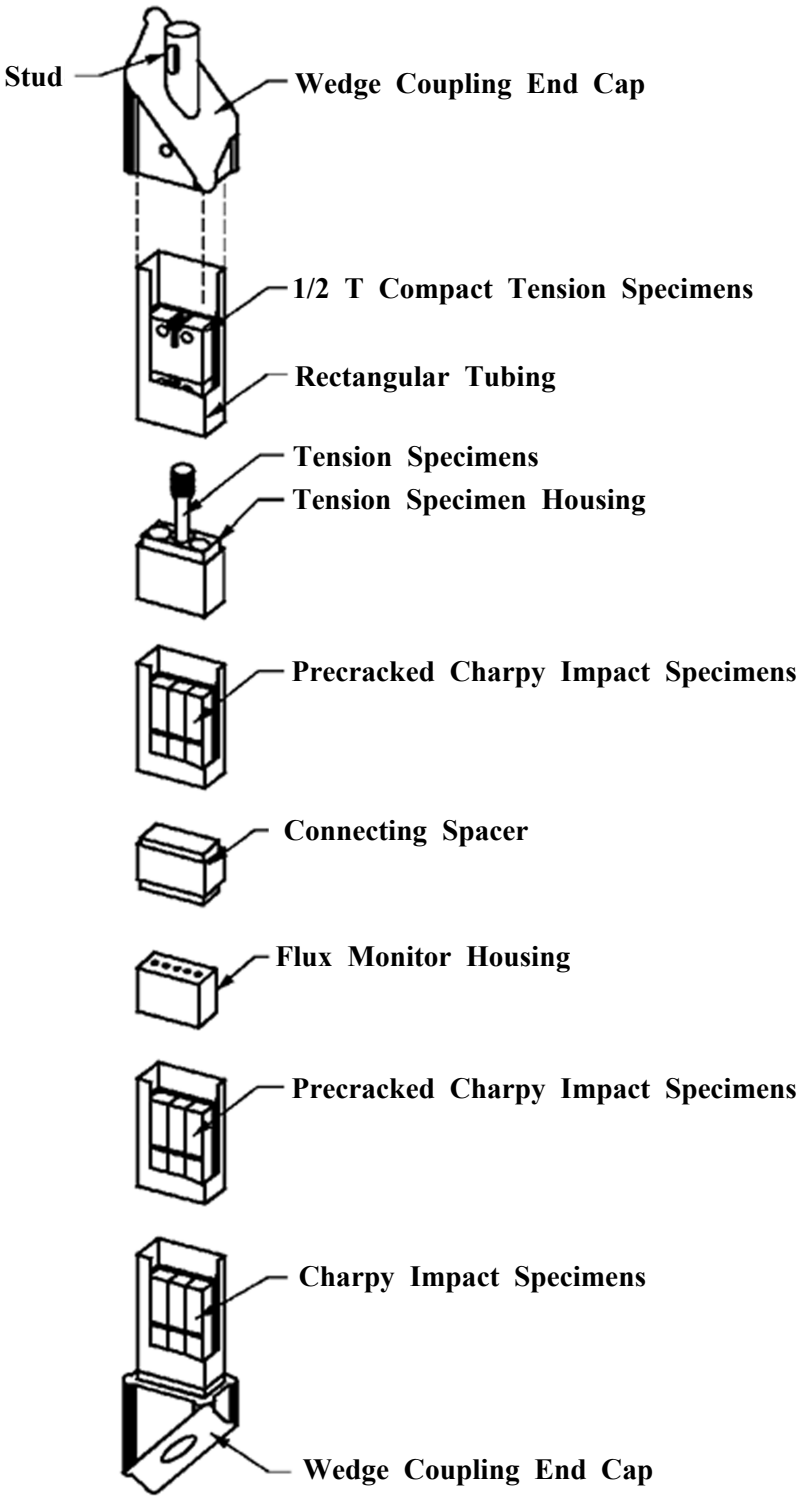

Figure 5.3-4 Lower Compartment Assembly

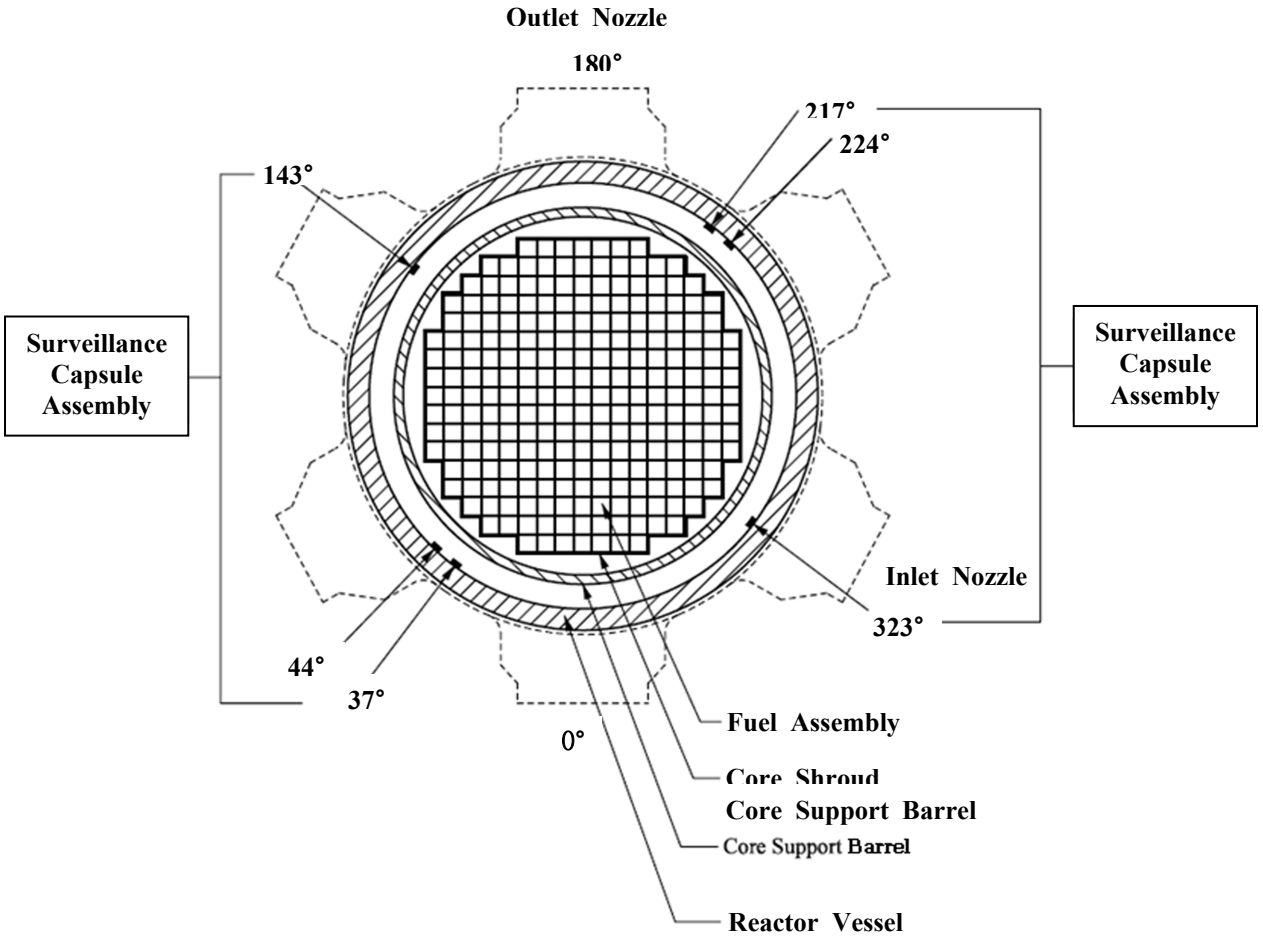

Figure 5.3-5 Location of Surveillance Capsule Assemblies (Plan View)

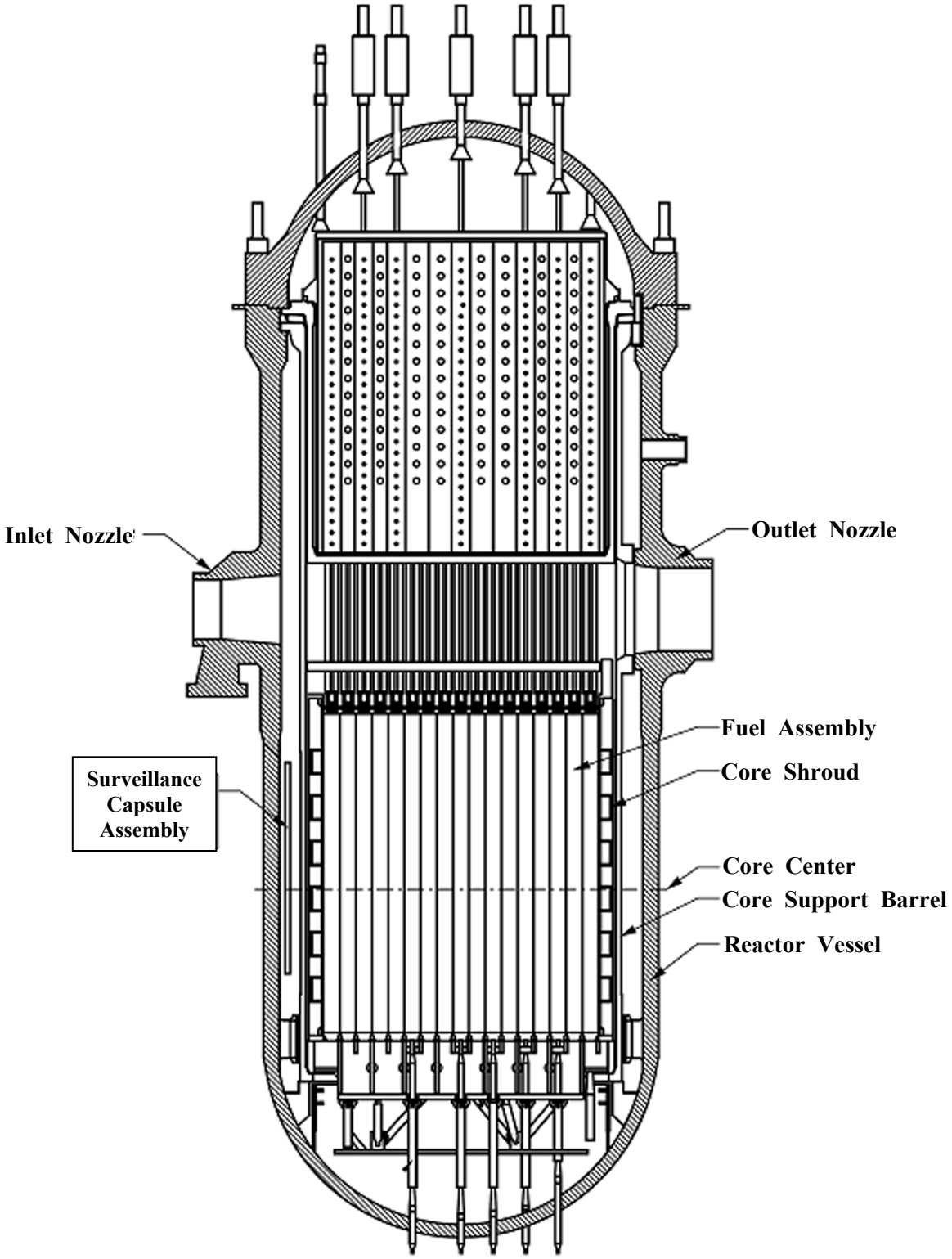

Figure 5.3-6 Location of Surveillance Capsule Assemblies (Elevation View)

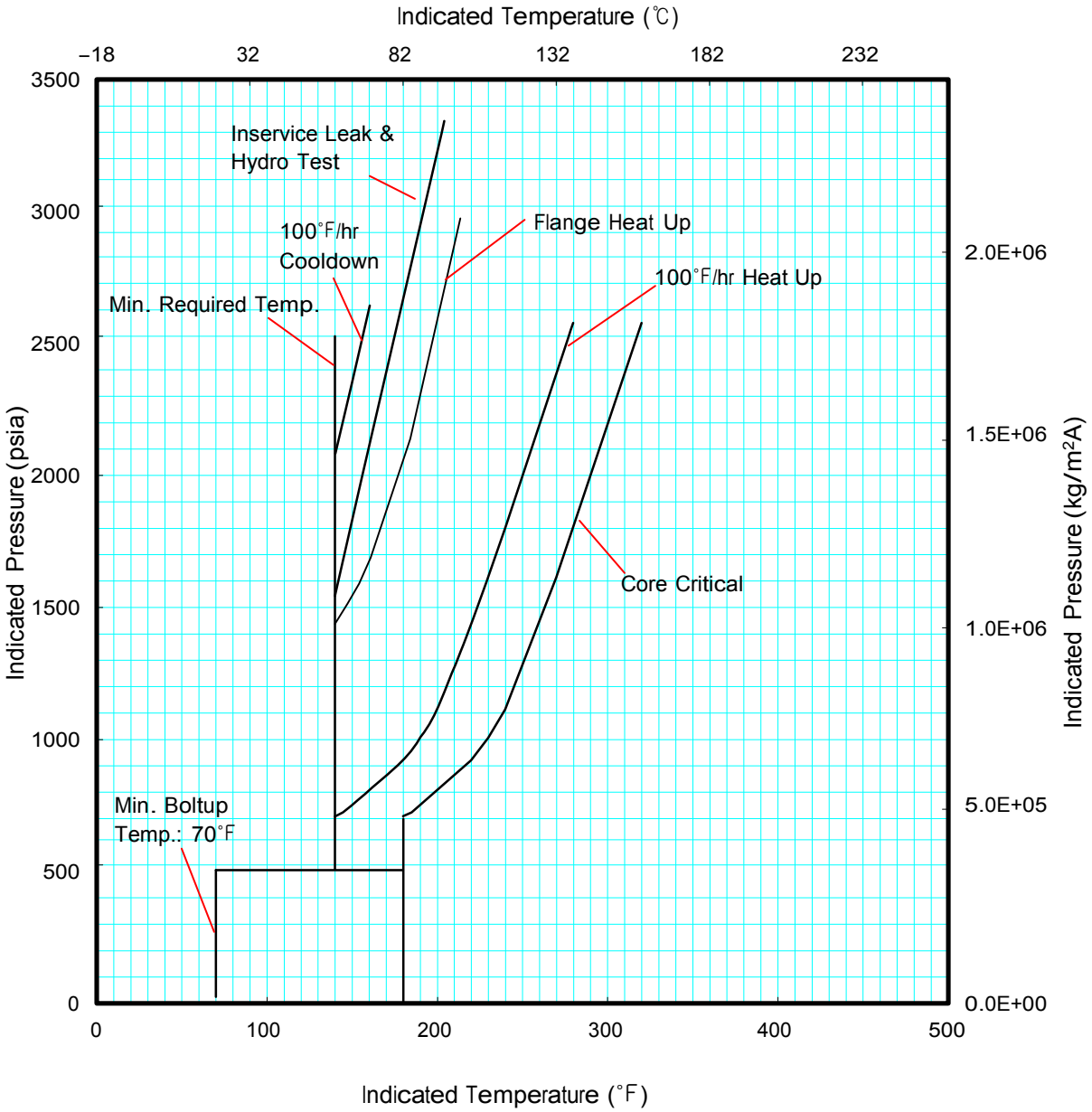

Figure 5.3-7 Pressure Temperature Limit Curve (60 years)

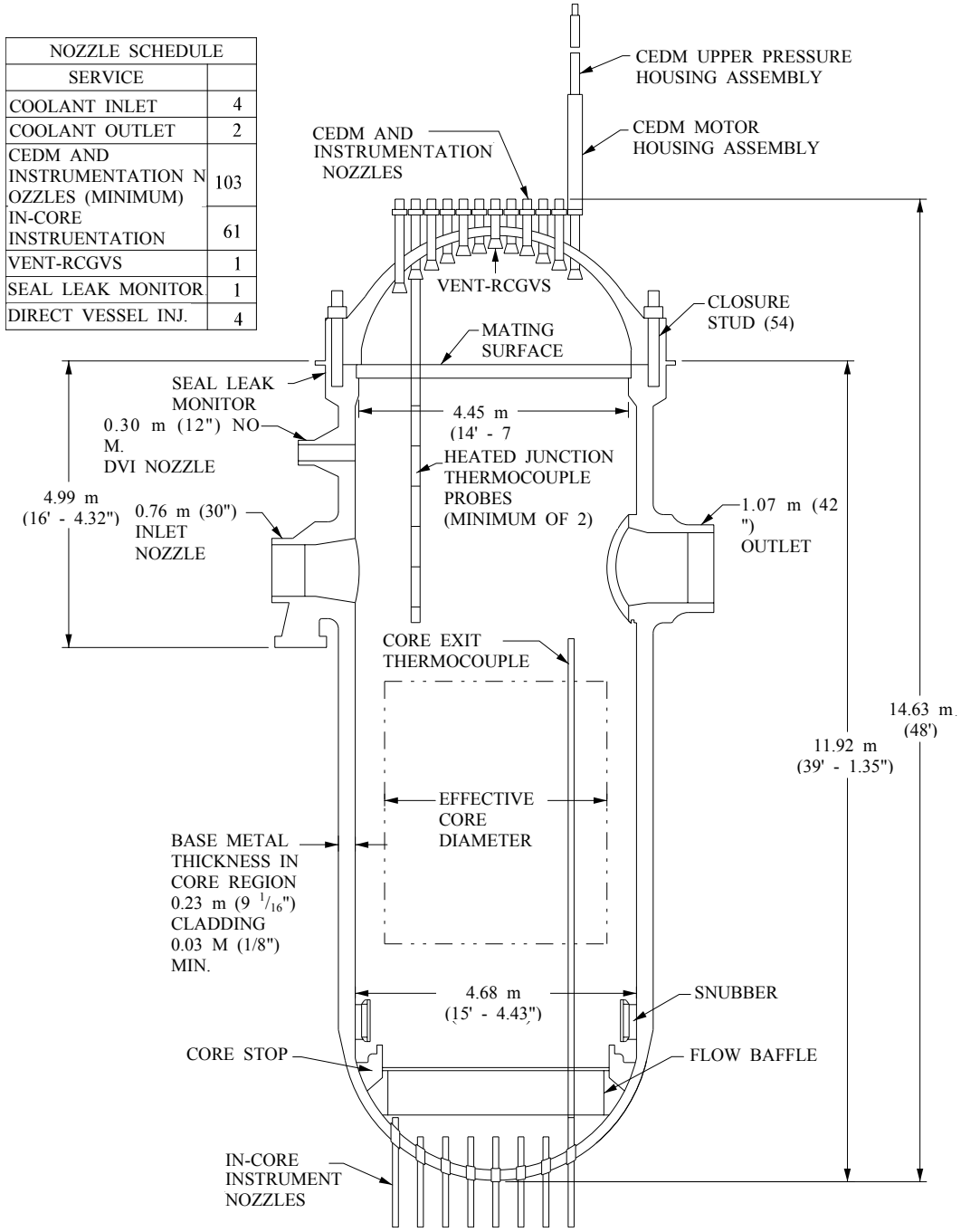

Figure 5.3-8 Reactor Vessel Assembly

5.4 Reactor Coolant System Component and Subsystem Design

5.4.1 Reactor Coolant Pumps

The reactor coolant pumps provide sufficient forced circulation flow through the reactor coolant system to provide reasonable assurance of adequate heat removal from the reactor core during power operation. A low limit on reactor coolant pump flow rate (i.e., design flow) is established to provide reasonable assurance that specified acceptable fuel design limits (SAFDLs) are not exceeded. Design flow is derived on the basis of the thermal-hydraulic considerations presented in Subsection 4.4.4.5.1.

The reactor coolant pump and motor assembly in conjunction with the flywheel provide sufficient coastdown flow following loss of power to the pumps to provide reasonable assurance of adequate core cooling.

The reactor coolant pump pressure boundary is designed for the transients given in Table 3.9-1 so the ASME Section III (Reference 1) allowable stress limits are not exceeded for the specified number of cycles. Stress criteria concerning earthquake and pipe rupture conditions are presented in Subsection 3.9.3.

The design overspeed of the reactor coolant pump is 125 percent of normal speed.

5.4.1.1 Pump Flywheel Integrity

The pump flywheel meets the requirements of GDC 1 (Reference 2) and U.S. Nuclear Regulatory Commission (NRC) Regulatory Guide (RG) 1.14 (Reference 3) as stated below:

a. The material used to manufacture the flywheel of the reactor coolant pump motor is produced by a commercially acceptable process that minimizes flaws, such as the vacuum melting and degassing process. The flywheel material is a quenched and tempered forging with the German material designation 26NiCrMoV14-5. This material meets the requirements listed below, and its mechanical properties are equal to or exceed SA-508 Class 2, which is a typical U.S. forged flywheel material. This provides adequate fracture toughness properties under reactor operating conditions. The acceptance criteria for flywheel design are compatible

with the safety philosophy of the Pressure Vessel Research Committee (PVRC) of the Welding Research Council (WRC) for primary coolant pressure boundary criteria as appropriate considering the inherent design and functional requirement differences between the pressure boundary and the flywheel.

1) The reference nil-ductility transition temperature (RT_{NDT}) of the material, as determined as per ASME NB-2331(a), is no greater than –12.2 °C (10 °F).

2) The Charpy V-notch (Cv) upper shelf energy level, in the "weak" (Wr) direction, as obtained as per ASTM A370 is no less than 6.9 m-kg (50 ft-lb). A minimum of three Cv specimens is tested from each plate or forging.

3) The minimum static fracture toughness of the material at the normal operating temperature of the flywheel is equivalent to a critical stress intensity factor (K_{IC}) of at least 165 MPa√m (150 ksi √in). Compliance is demonstrated by either of the following:

   a) Testing the actual material of the flywheel to establish the K_{IC} value at the normal operating temperature

   b) Determining that the normal operating temperature is at least 55.6 °C (100 °F) above the RT_{NDT}

4) Each finished flywheel is subjected to a 100 percent volumetric ultrasonic inspection from the flat surface as per ASME Section III. This inspection is performed on the flywheel after final machining and the overspeed test.

5) If the flywheel is flame-cut, at least 1.3 cm (0.5 in) of stock is left on the outer and bore radii, for machining to final dimensions.

6) The flywheel is subjected to a magnetic particle or liquid-penetrant examination per ASME Section III before final assembly. The inspection is performed on finished machined bores, keyways, splines, and drilled holes.

b. The flywheels are designed to withstand normal operating conditions, anticipated transients, and the largest mechanistic pipe break remaining after application of leak before break as described in Subsection 3.6.3, combined with the safe shutdown earthquake (GDC 4).

The following criteria are satisfied:

1) The combined stress, both centrifugal and interference, at normal operating speed does not exceed one-third of the minimum specified yield strength or one-third of the measured yield strength in the weak direction of the material if appropriate tensile tests have been performed on the actual material of the flywheel.

2) The design overspeed of the flywheel is 125 percent of the normal operating speed.

   The design overspeed is at least 10 percent above the highest anticipated overspeed of the pump. The highest anticipated overspeed is predicted for the largest break size remaining after application of leak before break as described in Subsection 3.6.3. The largest break size remaining after application of leak before break that may affect the maximum overspeed of the RCP is a 10.16 cm (4 inches) pressurizer spray line.

3) The combined centrifugal and interference stresses at the design overspeed are limited to two-thirds of the minimum specified yield strength or two-thirds of the measured yield strength in the weak direction if appropriate tensile tests have been performed on the actual material of the flywheel. The design overspeed is defined above.

4) The motor and pump shaft or bearings and coupling are able to withstand any combination of normal operating loads or anticipated transients and the largest pipe break remaining after application of leak before break described in Subsection 3.6.3, combined with the safe shutdown earthquake.

5) The fracture mechanics analysis is conducted to predict the critical speed of the flywheel, which proves that there is no possibility of having a ductile or non-ductile fracture failure that the maximum allowable crack might cause.

Each flywheel is tested at the design overspeed as defined above.

The flywheel is accessible for 100 percent in-place volumetric ultrasonic inspections. The flywheel-motor assembly is designed to allow such inspection with a minimum of motor disassembly. The inservice inspection program includes ultrasonic examinations of the areas of high stress concentration at the bore and keyway at about three and one-third year intervals, during the refueling or maintenance shutdown coinciding with the in-service inspection schedule as required by ASME Section XI (Reference 4). Removal of the flywheel is not required.

A surface examination of all exposed surfaces and a 100 percent volumetric examination by ultrasonic methods are conducted at approximately 10-year intervals during the plant shutdown coinciding with the in-service inspection schedule as required by ASME Section XI.

Each flywheel receives a preservice baseline inspection that incorporates the methods defined above for an inservice inspection. Examination procedures and acceptance criteria are determined in accordance with ASME Section III.

5.4.1.2 Description

Table 5.4.1-1 lists the principal parameters of the reactor coolant pumps, and Figure 5.4.1-1 depicts the arrangement of the pump and motor. Reactor coolant pump supports are described in Subsection 5.4.15. The piping and instrument diagram for the reactor coolant pump is given in Figure 5.1.2-2.

The four reactor coolant pumps are vertical, single stage, bottom suction, horizontal discharge, motor-driven centrifugal pumps. The pump impeller is splined and locked to its shaft. Pump shaft alignment is maintained by a water lubricated radial bearing within the pump and by radial and thrust bearings located in the motor stand. The pump and motor shafts are directly connected by a coupling.

The shaft seal assembly consists of two face-types, mechanical seals in series, with controlled leakage bypass to provide the same pressure differential across each seal. The seal assembly is designed for the pressure differential of 175.8 kg/cm^2 (2,500 psi) and to reduce the leakage pressure from the reactor coolant system pressure to the volume control tank pressure. A third, face-type, low-pressure vapor seal at the top is designed to withstand system operating pressure when the pumps are not operating. The leakage past the second pressure seal and the controlled leakage are piped to the volume control tank in the chemical and volume control system. Leakage past the low-pressure vapor seal is collected and piped to the reactor drain tank.

The temperature of the water in the seal assembly is maintained within acceptable limits by a water-cooled heat exchanger (HX). Water is also injected into the seal area from an external seal injection system. The performance of the shaft seal system is monitored by pressure and temperature sensing devices in the seal system. The seal assembly can be replaced without draining the pump casing or removing the shaft.

The RCP shaft seals are cooled by (1) seal injection water from the CVCS and (2) the component cooling water system (CCWS) through a high-pressure seal cooler. Pump seal operation may continue indefinitely provided either seal injection flow or the CCWS is available. The APR1400 design includes an additional support system (i.e., auxiliary charging pump). This system features a positive displacement pump to provide a diverse means of seal injection to the RCPs if the normal means of seal cooling are lost.

In the event of loss of either seal injection to the seal assembly or loss of CCWS flow to the high-pressure seal cooler, the seal cooling water temperature increases. Performance tests and analyses have shown that a minimum margin of 12.2 °C (22 °F) exists between the seal cooling water outlet temperature and the seal cooling water temperature limit specified by the pump manufacturer.

If there is a simultaneous loss of CCW to all RCP and motor bearing assemblies and seal injection water is available to the seals, the RCP can operate for at least 30 minutes without bearing seizure, which could affect normal RCP coastdown. This is discussed further in Subsection 5.4.1.3.

The seal assemblies are designed to limit seal leakage plus control bypass flow per pump to approximately the following values:

All seals functioning (normal)	12.1 L/min (3.2 gpm)
One seal functioning (abnormal)	16.7 L/min (4.4 gpm)

The motor is sized for continuous operation at the flows resulting from four-pump or one-pump operation with a 1.0 to 0.74 specific gravity of water. The motors are designed to start and accelerate to speed under full load with a drop to 80 percent of normal rated voltage at the motor terminals.

Each motor is provided with an anti-reverse rotation device. The device is designed to prevent impeller rotation in the reverse direction, assuming each of the following two conditions: (1) motor starting torque if the motor was incorrectly wired for reverse rotation and (2) reactor coolant flow through the pump in the reverse direction due to the largest pipe break remaining after the application of leak before break as described in Subsection 3.6.3.

5.4.1.3 Evaluation

The reactor coolant pumps are sized to deliver flow that equals or exceeds the design flow rate utilized in the thermal hydraulic analysis of the reactor coolant system. Analysis of steady-state and anticipated transients is performed assuming the minimum design flow rate. Tests are performed to evaluate reactor coolant pump performance during the post-core load hot functional testing to verify adequate flow.

If the offsite and onsite electrical powers are lost, the RCPs are tripped and begin to coast down, and the forced coolant flow through the reactor core gradually declines. Each RCP is designed to coast down at a rate that is slow enough to prevent core damage during the first few seconds of the core flow transient. Reasonable assurance that core damage will be prevented is provided by the flywheel in each RCP motor, which provides an additional rotating inertia to extend the pump coastdown. The total rotating inertia of the pump, motor, and flywheel is no less than 6,717 kg-m^2 (159,400 lbs-ft^2). The coastdown capability of the pump is reasonably assured to be maintained following a loss of offsite or onsite electrical power combined with the safe shutdown earthquake, as addressed in Subsection 3.2.1. Core flow transients are addressed in Subsection 15.3.1.

Leakage from the pump via the pump shaft is controlled by the shaft seal assembly. Reactor coolant entering the seal chambers is cooled and collected in closed systems to prevent reactor coolant leakage to containment. Instrumentation is provided to monitor seal operation.

The design overspeed of the flywheel is 125 percent of normal speed. A test of each flywheel at the design overspeed is performed prior to assembly to confirm that no missile is generated. Pump flywheel integrity is described in Subsection 5.4.1.1.

In the event of a break that is not eliminated by leak before break and that could result in increased flow through the pump tending to accelerate the pump impeller, the highest predicted pipe break induced overspeed is less than the lowest critical speed of the flywheel.

The pump and motor oil-lubricated bearings are lubricated by internal oil systems. Each bearing assembly has an internal oil system consisting of an oil bath or a force-feed type system. During normal operation, no external pumps are required because pumping action is accomplished by internal pumping devices. Lubricating oil is cooled by cooling coils submerged in the oil sumps. Both sumps and cooling coils are internal to the pump and motor structural frame, and are designed for seismic Category I operation. They adhere to ASME Section III, Class 3, as a guide for design and construction. Although the pump-motor assembly operation is not considered necessary for plant safety, this design minimizes the direct effects of seismic events on the reactor coolant pump and motor assembly oil lubricating systems so that adequate coastdown characteristics are not detrimentally affected.

Bearing metal temperatures, oil flow or pressure, oil levels, cooling water flow, and temperature are monitored and alarmed in the control room.

In the unlikely event that component cooling water to the reactor coolant pump and motor oil lubricating systems is not available or that an oil leak occurs during operation, the operator is alerted as soon as cooling water to the oil system is lost, and has at least 30 minutes in which to reduce power, if necessary, isolate the cooling water, and shut the reactor coolant pump motor assembly down to prevent bearing seizure. In the remote possibility of a simultaneous loss of component cooling water to all reactor coolant pump motor assemblies, 30 minutes is adequate to secure the plant and maintain the normal coastdown capabilities of the reactor coolant pump motor assemblies.

A shaft seizure due to bearing failure is unlikely during a loss of component cooling water event for the following reasons:

a. The design is such that the heat generated in the bearing, normally carried away by the cooling water, is removed through alternate paths. The lube oil sump baths surrounding the bearings, the stagnant cooling water remaining in the heat exchanger coils, and the bearing and sump assembly metal masses, all act as heat sinks. In addition, conduction down the pump shaft and radiation from the outer sump shell help reduce the temperature increase.

b. The rotation of the bearing assemblies provides reasonable assurance of adequate oil flow and mixture of heated oil so the heat transfers as described above.

c. In the event that the oil temperature increases such that the viscosity degrades significantly, the design of the thrust bearing provides reasonable assurance that the bearing will continue to produce a hydrodynamic film to preclude metal-to-metal contact.

If the event of an oil leak, redundant instrumentation alerts the operator to shut down the reactor coolant pump motor assembly, thereby avoiding bearing damage.

In the event of an oil leak, the separation of lubrication systems limits the problem to a single reactor coolant pump.

The loss of the oil in the bearing oil reservoir would not result in bearing seizure for the following reasons:

a. Temperature and oil level monitors provide appropriate indication of an abnormal condition.

b. The vibration monitoring device furnished on the pump responds to bearing degradation and allows the operator to shut down the pump.

c. If the above protective measures fail, the high torque produced by the motor causes a slow breakdown of the bearings but not a rapid shaft seizure. Industry

experience indicates that the babbitt bearing surfaces wear away and the bearing pads and sleeves are badly worn but the shaft continues to rotate.

If the extremely remote possibility of bearing seizure occurs while the reactor coolant pump motor assembly is in operation, adequate flow to the core is available from the other reactor coolant pump motor assemblies as demonstrated by the only study on pump loss of flow.

Figure 5.1.2-2 shows a separate oil lift system that is required for startup of the pump assembly. The oil lift system furnishes high pressure oil to the pump assembly thrust bearings, thereby lifting the rotor and reducing bearing friction during pump startup. Interlocking devices are furnished, which prevent pump startup until oil lift flow is established. The oil lift system shuts down automatically when the pump reaches full speed. Because an oil lift is not necessary during normal operation, an oil leak in this system does not cause a bearing failure.

5.4.1.4 Tests and Inspections

The reactor coolant pump pressure boundary is nondestructively inspected as required by ASME Section III for Class 1 components. The pump undergoes a hydrostatic pressure test in the vendor's shop and with the reactor coolant system. Inservice inspection of the pump pressure boundary is performed during the plant life in accordance with ASME Section XI.

The pump assembly is performance tested in the vendor's shop over at least the normal operating range in accordance with the standards of the Hydraulic Institute. The tests also demonstrate the ability of the pumps to function under the various operating conditions specified. Tests commonly performed are hot and cold performance and stop-start cycling. Vibrations are monitored at several places on the pump during shop testing. In addition to meeting an absolute criterion for vibration amplitude, the test results are examined for evidence of critical speed problems.

The pump motors undergo a "routine" test in accordance with NEMA MG-1 (Reference 5). This test also confirms that the motors are within their vibration limits. One motor is used as the driver for the pump assemblies during the pump manufacturer's shop testing.

To the greatest extent practicable, all conditions of operation within the reactor coolant pump are duplicated.

Reactor coolant pump flywheel inspections and testing are described in Subsection 5.4.1.1.

5.4.1.4.1 Reactant Coolant System Flow Rate Verification

Initial verification of the RCS flow rate is made during the plant startup tests. RCS flow rates are measured during the pre- and post-core hot functional tests, and during the power ascension tests. The objective of these tests is to verify that the RCS flow rate meets the flow rate range in Subsection 3.4.1 of the Technical Specifications (Chapter 16).

5.4.2 Steam Generators

The two steam generators are designed to transfer 4,000 MWt from the RCS to the secondary system, producing approximately 8.141×10^6 kg/hr (17.95×10^6 lb/hr) of 70.30 kg/cm^{2}A (1,000 psia) saturated steam, when provided with 232.2 °C (450 °F) feedwater. Moisture separators and steam driers in the shell side of the steam generator limit the moisture content of the steam to maximum 0.25 weight percent during normal operation at full power. The steam generator design parameters are listed in Table 5.4.2-1. The steam generators, including the tubes, are designed to withstand the consequences of the design transients of Table 3.9-1 so that the ASME Code allowable stress limits are not exceeded for the specified number of cycles. All transients have been established based on conservative assumptions of operating conditions in consideration of supporting system design capabilities.

The steam generator is designed to provide reasonable assurance that critical vibration frequencies are well out of the range that are expected during normal operation and during abnormal conditions. The tubing and tubing supports are designed and fabricated with considerations given to both secondary side flow induced vibration and reactor coolant pump induced vibrations. In addition, the steam generator assemblies are designed to withstand the blowdown forces resulting from a steam line break and feedwater line break. The two accidents are not considered simultaneously.

Vapor bubbles are generated if the static pressure in a flowing liquid is dropped below the saturated pressure corresponding to the liquid temperature. The region of the flow where bubbles exist is the cavitating region, whereas the observed damage is at the location of the bubble collapse. In the APR1400 steam generator, a pressure drop inside the tubes is not as significant as a cavitation, which can occur because the operating pressure of 158.19 kg/cm^2G (2,250 psig) inside the tubes is much higher than the saturation pressure of 121.13 kg/cm^2G (1,723 psig) of the maximum coolant temperature of 323.8 °C (615 °F) in the steam generator, and the flow paths of tubes from the tube inlet to the tube outlet are smooth enough not to cause a sudden drop of velocity of flow. The secondary side flow path outside-tubes is also smooth on the secondary side so that cavitation does not occur. No cavitation has been reported to date in steam generators that are identical to the APR1400 steam generators.

The steam generator tube material is thermally treated NiCrFe Alloy 690 (ASME SB-163). The outside diameter is 19.05 mm (0.75 in) with 1.0668 mm (0.042 in) nominal wall thickness. An analysis is performed to establish the maximum allowable tube wall degradation for the steam generator tubes in accordance with the requirements of NRC RG 1.121 (Reference 6). Load conditions considered are maximum tube differential pressures during normal operation and faulted load conditions. The margin of safety against tube rupture under normal operating condition is not less than 3.0, and the margin of safety against tube failure under postulated accidents, such as a loss of coolant accident, main steam line break, or feedwater line break concurrent with an SSE, are consistent with the margin of safety determined by the stress limits specified in the ASME Code.

A steam generator tube rupture incident is a penetration of the barrier between the reactor coolant system and the main steam system. The integrity of this barrier is significant from the standpoint of radiological safety in that a leaking steam generator tube allows the transfer of reactor coolant into the main steam system. Radioactivity contained in the reactor coolant would mix with water in the shell side of the affected steam generator. This radioactivity would be transported by steam to the turbine and then to the condenser, or directly to the condenser via the turbine bypass system. Noncondensable radioactive gases in the condenser are removed by the main condenser's evacuation system, and they are discharged through the plant ventilation system.

The containment bypass of primary coolant, following multiple steam generator tube ruptures, was investigated for the APR 1400 design to demonstrate an adequate available

operator action time. Detailed analyses of rupture cases for one tube and five tubes each are presented in Reference 7. The results show that the MSSV opening time varies from over 4 hours for rupture of one tube to about 30 minutes for rupture of five tubes with only automatic response of plant systems and without operator actions. Reference 7 includes a description of the design features that minimize containment bypass during a steam generator tube rupture.

Experience with steam generators indicates that the probability of the complete severance of a tube is remote. A double-ended rupture has never occurred in a steam generator of this design. The more probable modes of failure, which result in smaller break areas, are the results from involving the occurrence of pinholes or small cracks in the tubes and of cracks in the seal welds between the tubes and tubesheet. Detection and control of steam generator tube leakage are described in Subsection 5.2.5.

The concentration of radioactivity in the secondary side of the steam generators is dependent on the concentration of radionuclides in the reactor coolant, the primary-to-secondary leak rate, and the rate of steam generator blowdown. The specific activities that are expected in the secondary side of the steam generators during normal operation are given in Section 11.1.

The recirculation water within the steam generators contains volatile additives necessary for proper chemistry control. These and other chemistry considerations for the steam generators are discussed in Subsection 10.3.5.

5.4.2.1 Steam Generator Materials

5.4.2.1.1 Selection, Processing, Testing, and Inspection of Materials

The pressure boundary materials used in the construction of the steam generators are listed in Table 5.2-2. These materials are in accordance with ASME Section III. The Code cases used in the fabrication of the steam generators are described in Subsection 5.2.1.

The corrosion-resistant cladding (NiCrFe alloy or austenitic stainless steel) on the tubesheet and on other primary side components is weld-deposited, fabricated, and inspected

according to the requirements in Section III NB and Part QW of Section IX of the ASME Code.

5.4.2.1.2 Steam Generator Design

5.4.2.1.2.1 Design Description

The steam generator is illustrated in Figure 5.4.2-1. Moisture-separating equipment in the shell side of the steam generators limits moisture content of the exit steam. Manways and handholes are provided for access to the steam generator internals. Reactor coolant enters at the bottom of each steam generator through a single inlet nozzle, flows through the U-tubes, and leaves through two outlet nozzles. A vertical divider plate separates the inlet and outlet plenums in the lower head.

The steam generator with integral economizer (Figures 5.4.2-2 and 5.4.2-3) is in most respects similar to earlier U-tube recirculating steam generators. The basic difference is that instead of introducing feedwater only through a sparger ring to mix with the recirculating water flow in the downcomer channel, feedwater is also introduced into a separate, but integral section of the steam generator. A semi-cylindrical section of the tube bundle, at the cold leg or exit end of the U-tubes, is separated from the remainder of the tube bundle by vertical divider plates. Feedwater is introduced directly into this section and pre-heated before discharge into the evaporator section.

The economizer section is designed in consideration of operating transients, startup and standby operation, and accident conditions such as loss of feedwater flow and feedwater line break. The structural design of the various parts is adequate to withstand the thermal and pressure loadings from these various conditions, consistent with the appropriate load classifications and design rules in ASME Section III, Appendix G.

The components of the steam generator economizer section are designed for the primary stresses that occur due to the blowdown associated with a feedline break. The divider plates, which separate the economizer region from the evaporator region of the secondary side, are supported from the vessel shell and the central cylindrical support welded to the tubesheet. This divider cylinder becomes an extension of the primary tubesheet stay cylinder, though less massive, and extends the full height of the economizer. The tube

support/flow baffle plates are supported from the vessel shell, the divider cylinder, and the tubesheet via an array of support rods. The support rods, which also serve as support plate spacers, are solid and designed for either tensile or buckling loads. Thin plates are not used because of the potential for collapse when subjected to differential pressure.

The lower portion of the evaporator section and the downcomer channel occupy only half of the steam generator cross section. The effect of this non-symmetry is considered in the calculation of the recirculation ratio, internal flow considerations, and the design of the tube support structures.

The steam-water mixture leaving the vertical U-tube heat transfer surface enters the separators, which produces a centrifugal motion in the mixture and separates the water particles from the steam. The water exits from the perforated separator housing and recirculates through the downcomer channel to repeat the cycle. Final drying of the steam is accomplished by passage of the steam through corrugated plate dryers.

The steam generators are designed to provide a margin of 10 percent of the total heat transfer surface area for the plugging.

A recirculation system allows the circulation of water through the steam generator during wet lay-up and the addition of chemical cleaning agents. The recirculation system consists of a distribution ring located above the tube bundle below the normal water level with connecting piping to the blowdown system. This piping needs a nozzle penetration through the pressure boundary (shell). Suction is taken at the blowdown nozzle and recirculated through the distribution ring. The recirculating header can effect a rapid changeover of the steam generator inventory if a chemical intrusion requiring the rapid removal of impurities occurs.

The primary head draining capability is provided by the channel head drains. Tubesheet drains allow secondary side draining. The drain capability enhances access for inspection and maintenance.

In order to enhance the steam generator integrity, the feedwater box is designed to prevent the inflow of foreign objects greater than the 6.35 mm (0.25 in) tube gap through the

economizer feedwater region, which is a major path of foreign object inflow, and to remove the foreign objects during the overhaul period.

The steam generator blowdown system (Subsection 10.4.8) is designed for high-flow blowdown. The system is effective in removing particulate accumulations at the tubesheet.

The pressure drop from the steam generator feedwater nozzles to the steam outlet nozzle including the economizer is approximately 2.981 kg/cm^2D (42.4 psid).

The steam generator supports are described in Subsection 5.4.15.

5.4.2.1.2.1.1 Flow-Induced Vibration of the Tube Bundle

The tube support system uses the eggcrate grid and upper tube supports, both of which have proven effective in suppressing excessive tube vibration while providing superior thermal hydraulic characteristics for maximum protection against the shell side chemical "hideout" and tube corrosion. The test data provided the basis for determining acceptable shell side fluid velocities in the most critical regions of the tube bundle, the flow entrance, and the flow exit regions. Based on the test data and results from the shell side flow distribution analysis, the design of tube support spacing is shown to have conservative design margins against the onset of the fluid elastic instability (FEI). The steam generator design configuration possesses the tube vibration stability ratio below the design goal of one. Tube displacements due to the random turbulent excitation (RTE) are based on the turbulent buffeting methodology of ASME Section III, nonmandatory Appendix N (Reference 8).

Fluid elastic instability (FEI): FEI is the dominant mechanism for inducing the vibrational instability in tube bundles representative of the APR1400 design. This phenomenon occurs when sufficient flow velocity exists to put the tube into motion, which leads to the activation of a feedback mechanism. This causes an ever-increasing amplitude of vibration until (1) a balance is reached between the fluid energy that is absorbed and the energy that is dissipated through damping by the tube or (2) impacting ensues. The pertinent relationships are the critical velocity, effective velocity, and stability ration.

Random turbulent excitation (RTE): In a turbulent fluid flow environment, a tube can extract some of the energy from the fluid that has a frequency at or near the tube span natural frequency. Once the tube is put in motion, it may tend to coordinate the flow in such a way as to make it possible to absorb even higher quantities of fluid energy. ASME Section III non-mandatory Appendix N recommends an analytical methodology for determining tube response (displacements) due to RTE.

Vortex shedding: This mechanism manifests itself in a classic resonance situation when the Von-Karman vortex shedding frequency coincides with a tube span natural frequency. Theoretically when resonance exists, the magnification factor becomes infinite and even the smallest forcing function can produce vibrational failure. In reality, the forcing function introduces more energy into the system than can be dissipated through damping or a stable level of vibration will be established. However, the design of the tube and tube support for the APR1400 steam generator is not susceptible to the vortex shedding resonance based on the results of the tube vibration program implemented on the tube bundle with tightly packed tube arrays.

To evaluate the flow-induced vibration, the thermal-hydraulic conditions including interstitial fluid velocity, fluid density, void fraction, and steam quality of APR1400 steam generator secondary side are analyzed using EPRI's ATHOS3 computer program specified in Subsection 3.9.1.2.1.11. The design concept of tube support structures for the APR1400 steam generator is identical to that of the OPR1000 steam generator. This design has been used in other nuclear power plants and has proven to effectively suppress flow-induced vibrations of large-sized tube bundles. Refer to Subsection 5.4.2.1.2.2 for detailed descriptions of the tube support structures.

5.4.2.1.2.1.2 Water Hammer at Feedwater Ring

Provisions related to the design and operating procedure of economizer-type steam generators are made to prevent the water hammer. A goose-neck design and top-discharge spray nozzle of the downcomer feedwater piping inside the steam generator is included in the design to prevent the generation of steam bubbles regardless of water level. An auxiliary feedwater line is also connected to the downcomer feedwater line, and a plant startup test to confirm that there is no water hammer in the feedwater line is performed. With respect to the operating procedure, all feedwater flow to the steam generator is directed through the downcomer feedwater nozzle below 20 percent of full power, which

eliminates the possibility of a condensation-induced water hammer in the economizer feedwater line.

5.4.2.1.2.1.3 Thermal Stratification at Feedwater nozzle

NRC Bulletin 79-13 (Reference 9) addresses the effect of thermal stratification that leads to cracking of the feedwater line.

The APR1400 feedwater lines are designed to minimize thermal stratification. The feedwater lines are angled downward from the horizontal to minimize the potential for thermal stratification.

Thermal stratification could occur in the horizontal sections of piping when the incoming feedwater flow rate is low and there is a large temperature difference between the incoming feedwater and the steam generator coolant, which results in a density difference. Fluctuations in the elevation of the interface between the hot and cold coolants cause thermal fatigue damage.

As shown in Figure 5.4.2-1, the upward bend using a goose-neck design is incorporated to avoid the stratified flows in the piping connecting the thermal sleeve in the downcomer feedwater nozzle to the downcomer feedwater piping inside the steam generator.

5.4.2.1.2.2 Material Design

The design of the APR1400 steam generators limits the potential for degradation so the integrity of the steam generator, including the tubes, is maintained during the operating period between inspections. Degradation of the steam generator tubes and other secondary side components that could affect tube integrity is manageable through the steam generator program (see Subsection 5.4.2.2). In addition, degradation of steam generator RCPB materials is manageable through the inservice inspection program (See Subsection 5.2.4).

Tube Supports

The three types of structures in the APR1400 steam generators that support the tubes are horizontal grid or eggcrate, vertical, and diagonal. All three types are fabricated from Stainless Steel Type 409. A design consideration for the supports is the prevention of dryout at support locations. With one exception, all tube supports in the APR1400 steam generator are constructed of flat strips that present a flat surface to the tube. The exception is the flow distribution plate just above the entrance to the economizer section of the tube bundle. At this location, secondary water is subcooled, and dryout will therefore not occur.

The eggcrates have three configurations depending on their location in the evaporator: a full circular structure, a half circular structure, and a structure bounded by the circumference and a chord. An eggcrate is composed of strips intersecting at an angle of 60 degrees and joined at the outer and inner perimeters with a pair of square bars on top and bottom. The strips alternate between a 50.8 mm (2 in) slotted type and a 25.4 mm (1 in) unslotted type; both are 2.286 mm (0.090 in) thick (refer to Figure 5.4.2-4). The eggcrates themselves are supported and spaced by tie rods located throughout the tube bundle and by the weldment to the tube bundle shroud.

The eggcrates form an open lattice and thus minimize the potential for local dryout conditions. The number of eggcrates is selected to maintain the natural frequency of the tubes that is significantly higher than the exciting frequencies induced by cross flow at the fluid entrances to the bundle. Both analysis and test results have been applied to define spacing that precludes vibration-induced damage (fretting and wear). In addition, careful attention is paid to localized flow path details where velocities may be higher than nominal. The vertical supports, shown in Figure 5.4.2-5, are assembled concurrently with tube installation and are composed of vertical, slotted 50.8 mm (2 in) strips intersecting with horizontal 12.7 mm (0.5 in) strips; both 2.286 mm (0.090 in) thick. The assembly is bounded about the periphery by either square bars or custom-shaped plates depending on the location. The vertical supports in the bend region are made of perforated strips to enhance their free-flowing nature. As shown on Figure 5.4.2-5, the vertical supports are also integrated with perforated diagonal strips, which provide thorough vibration support of the bend region without compromising the free-flowing character of the supports.

One set of flow distribution plate is installed at the full eggcrate of steam generator to prevent the secondary-side flow from concentrating into central cavity. This design has been proven to effectively reduce localized wear since having been applied to previous nuclear power plants. The flow distribution plate is fixed onto the square-section ring in the full eggcrate with retainer ring segment and hexagon head cap screws. The cover plate is provided in the center of the flow distribution plate for manufacturing process. Lock washers and initial preloads for the cap screws are applied.

Steam Generator Tubes and Other Secondary Non-pressure Boundary Material

To limit the potential for the tubes to be dented, the tube support structures are fabricated from stainless steel Type 409 material (see Table 5.2-2). Tube denting is associated with the corrosion of tube support structures and creates a hard corrosion product that fills the crevice between the tube and the tube support. Dents can result in the restriction of primary coolant flow and stress-corrosion cracking of the tubes.

To limit the susceptibility of steam generator tubes to corrosion and to optimize the corrosion resistance of the microstructure, the APR1400 steam generator tubes are made of NiCrFe Alloy 690 that is thermally treated (TT). To reduce residual stresses in the U-bent region of short-radius (less than or equal to 279.4 mm [11 in)) U-bent tubes, the U-bent region of short-radius tubes is stress-relieved after bending. The materials that support the tubes and other materials on the secondary side, such as flow distribution plates and eggcrate flow distribution plates, are stainless steels that are sufficiently resistant to degradation to provide reasonable assurance that the tubes will remain adequately supported and to reduce the potential for the generation of loose parts, which can result in loss of tube integrity.

In addition, to prevent PWSCC, thermally treated alloy 690 (690TT) and 52/52M/152 weld metals are used for the steam generators. An additional discussion of the avoidance of stress corrosion cracking for Ni-base alloys is included in Subsection 5.2.3.5.

Tube Fastening to Tubesheet

The method of fastening tubes to the tubesheet conforms to the requirements of ASME Sections III and IX. Tube expansion into the tubesheet is such that no voids or crevices

occur along the length of the tube in the tubesheet. The tube is expanded into the tubesheet by the use of hydraulic expansion. For hydraulic expansion, the expansion mandrel length is set to provide full-depth expansion, and hydraulic pressure is accurately applied, measured, reapplied, and controlled inside the tube so that the crevice between the tube and tubesheet is as small as possible. Expansion of tubes creates residual stresses in the transition zone between the expanded and the unexpanded regions of the tube. Residual stress measurements have been taken on the transition zone. The residual stress measurements verify the absence of any high residual tensile stress in the transition zone. Material specifications such as the use of TT tubing, welding procedures and fabrication procedures preclude the need for complete-bundle stress relief after assembly.

Corrosion Allowance

Carbon or low alloy steel materials, which compose the pressure boundary of secondary side, have the corrosion allowance of 1.5875 mm (1/16 in). Other secondary side materials and primary side materials are Ni-based alloys or austenitic stainless steels or clad with these materials, which have sufficiently high corrosion resistance.

Bolting Materials

Primary studs and nuts of the APR1400 steam generators are SB-637 N07718, and secondary studs and nuts are SA-540 Grade B24, or SA-193 Grade B7. These studs and nuts have performed adequately under service conditions and have not shown stress-corrosion cracking. The yield strength of ferritic fastener materials is limited to a maximum of 10,546 kg/cm^2 (150 ksi).

5.4.2.1.3 Fabrication and Processing of Ferritic Materials

Fracture Toughness

The Class 1 components of the steam generator meet the fracture toughness requirements of the ASME Code. Fracture toughness testing is described further in Subsection 5.2.3.3.

Welding

Subsection 5.2.3.3 describes the controls for welding ferritic steels. Conformance to the applicable NRC RGs for steam generators is summarized as follows:

a. NRC RG 1.50, "Control of Preheat Temperature for Welding of Low-Alloy Steel," is addressed in Subsection 5.2.3.3

b. NRC RG 1.71, "Welder Qualification for Areas of Limited Accessibility," is addressed in Subsection 5.2.3.3

c. NRC RG 1.43, "Control of Stainless Steel Weld Cladding of Low-Alloy Steel Components," is addressed in Subsection 5.2.3.3

5.4.2.1.4 Fabrication and Processing of Austenitic Stainless Steel

Limiting Susceptibility to Cracking

Cold-worked austenitic stainless steel is not used for steam generator RCPB materials.

Fabrication of the steam generator is consistent with the recommendations of NRC RG 1.44, except for the criterion used to demonstrate freedom from sensitization. ASTM A 262 Practice A or E is used to demonstrate freedom from sensitization in fabricated and unstabilized stainless steel. Stabilized stainless steels are not subject to sensitization. Stress corrosion cracking of unstabilized austenitic stainless steels in the pressure boundary of the APR1400 steam generators is prevented through the following:

a. Solution heat treatment

b. Implementation of the procedures and/or practices demonstrated not to produce a sensitized structure for the fabrication of RCPB components

c. Delta ferrite control of weld filler metal, which is controlled to 8FN-15FN (8FN-16FN for Type 309) with no reading below 5FN as deposited

d. Prohibition of exposure of unstabilized austenitic Type 300 series stainless steels to temperatures ranging from 426.7 to 815.6 °C (800 to 1,500 °F)

e. Limit of carbon content of unstabilized austenitic Type 300 series stainless steels to a maximum of 0.065 percent

f. Control of welding parameters:

   1) Weld heat input to less than 23.6 kJ/cm (60 kJ/in)

   2) Interpass temperature to a maximum of 176.7 °C (350 °F)

Avoidance of stress corrosion cracking is described further Subsection 5.2.3.4.

Requirements for cleanliness and contamination protection are included in the equipment specification for the steam generator fabricated with austenitic stainless steel. Procedures for contamination control during fabrication, shipment, and storage of the steam generator meet the requirements of NRC RG 1.37. Avoidance of contamination causing stress corrosion cracking is described further in Subsection 5.2.3.4.

Tools used in abrasive work operations on austenitic stainless steel such as grinding or wire brushing do not contain and are not contaminated with ferritic carbon steel or other materials that could contribute to intergranular cracking or stress corrosion cracking.

The thermal insulation that is used for the steam generator is either reflective metal insulation or nonmetallic insulation that meets the criteria of NRC RG 1.36.

Welding

Subsection 5.2.3 describes the controls for welding austenitic stainless steels. Conformance to the applicable NRC RGs for the steam generator is summarized as follows:

a. NRC RG 1.31, “Control of Ferrite Content in Stainless Steel Weld Metal,” is addressed in Subsection 5.2.3.4

b. NRC RG 1.34, "Control of Electroslag Weld Properties," is addressed in Subsection 5.2.3.3

c. NRC RG 1.71, "Welder Qualification for Areas of Limited Accessibility," is addressed in Subsection 5.2.3.3

5.4.2.1.5 Compatibility of Materials with the Primary and Secondary Coolant and Cleanliness Control

Localized corrosion of tubing material has led to steam generator tube leakage in some operating reactor plants. Examinations of tube defects that have resulted in leakage have shown that two mechanisms are primarily responsible. Localized corrosion mechanisms are referred to as (stress assisted caustic cracking and wastage or tube wall thinning. Both types of corrosion have been related to steam generators that have operated on phosphate chemistry. The caustic stress-corrosion type of failure is precluded by controlling bulk water chemistry to the specification limits shown in Subsection 10.3.5. Removal of solids from the secondary side of the steam generator is described in Subsection 10.4.8.

Operating steam generators have experienced the following corrosion degradation mechanisms: phosphate wastage, sulfate wastage, intergranular attack, secondary side stress corrosion cracking, and pitting and denting resulting from tube support corrosion. With respect to these phenomena, the most important design feature of the APR1400 steam generators is the selection of tubing and tubing support materials. NiCrFe Alloy 690 TT is specified for the APR1400 steam generator tubes. Stainless Steel Type 409 material is specified for the tube supports (see Table 5.2-2).

Volatile chemistry has been successfully used to minimize corrosion in many of the steam generators that have gone into operation since 1972. Secondary water chemistry and operating chemistry limits for secondary water and feedwater are addressed in Subsection 10.3.5. Removal of solids from the secondary side of the steam generator is addressed in Subsection 10.4.8.

The onsite cleaning and cleanliness of the steam generator are controlled according to NRC RG 1.37.

5.4.2.1.6 Provisions for Accessing the Primary and Secondary Sides of the Steam Generator

The steam generators have 533.4 mm (21 in) manways (Figure 5.4.2-1). On the primary side, there is one manway for the cold leg side and another for the hot leg side. Manway locations are optimized for use of remote manipulators for inspection and maintenance. Access for eddy current testing is through the primary-side manways.

On the secondary side, two manways are provided to allow access to the separator and dryer area. In addition, an internal hatch provides access to the top of the tube bundle. These openings allow inspection, which provides information on the condition of separation equipment, feedwater ring, and top of the tube bundle. Two 203.2 mm (8 in) handholes, at the tubesheet elevation, are included to provide access for tubesheet sludge lancing as well as for inspection of the downcomer annulus. These handholes can be used to remotely inspect for and retrieve loose parts. In order to enhance the steam generator integrity, the feedwater box is designed to limit the introduction of foreign objects greater than the 6.35 mm (0.25 in) tube gap through economizer feedwater region, which is a major path of foreign object inflow. Two 127.0 mm (5 in) inspection holes are provided to remove the foreign objects trapped in the feedwater box.

5.4.2.2 Steam Generator Program

The purpose of a steam generator program is to maintain the structural and leakage integrity of the steam generator tubes. A steam generator program provides the effective monitoring and management of tube degradation and degradation precursors for the prompt preventive and corrective actions. The steam generator program contains a balance of prevention, inspection, evaluation and repair, and leakage monitoring measures. The steam generator program is established and maintained based on the requirements of NEI 97-06 (Reference 10) and its referenced EPRI guidelines.

The steam generator program complies with the relevant requirements of the following NRC regulations:

a. GDC 32 of Appendix A to 10 CFR 50. GDC 32 requires, in part, that the designs of all components that are part of the RCPB permit periodic inspection and testing of critical areas and features to assess their structural and leak-tight integrity.

b. 10 CFR 50.55a(g) requires that ISI programs meet the applicable inspection requirements in ASME Section XI. The steam generator program is a portion of the ISI program. In addition, 10 CFR 50.55a(b)(2)(iii) addresses steam generator tubes and states that if the plant Technical Specifications include inspection requirements that differ from those in Article IWB-2000 of Section XI of the ASME Code, the Technical Specifications govern.

c. 10 CFR 50.36 applies to the steam generator program in the Technical Specifications.

d. Appendix B to 10 CFR 50 applies to the implementation of the steam generator program. Of particular note are Criteria IX, XI, and XVI. Criterion IX requires, in part, that measures are established to ensure that special processes, including nondestructive testing, are controlled and accomplished by qualified personnel using qualified procedures. Criterion XI requires, in part, the establishment of a test program to ensure that all testing required to demonstrate that SSCs will perform satisfactorily in service is identified and performed in accordance with written test procedures that incorporate the requirements and acceptance limits in applicable design documents. Criterion XVI requires, in part, that measures are established to ensure the prompt identification and correction of conditions that are adverse to quality.

e. 10 CFR 50.65 requires that licensees monitor the performance or condition of SSCs against goals to provide reasonable assurance that such SSCs are capable of fulfilling their intended functions.

5.4.2.2.1 Design Description

The steam generators are designed to permit access required for tube inspections, testing, plugging, and repairs. The design is described further in Subsection 5.4.2.1.6.

5.4.2.2.2 Elements of Steam Generator Program

The steam generator program includes degradation assessment, inspection, integrity assessment, tube plugging and repairs, primary-to-secondary leak monitoring, maintenance of secondary side integrity, secondary side water chemistry, primary side water chemistry, foreign material exclusion, contractor oversight, self-assessment, and reporting.

5.4.2.2.2.1 Degradation Assessment

Prior to the pre-service and subsequent planned steam generator inspections, a degradation assessment is performed. The assessment addresses the RCPB within the steam generator, (e.g., plugs, sleeves, tubes, components that support the pressure boundary such as secondary-side components). The assessment considers operating experience.

The overall purpose of the degradation assessment is to provide reasonable assurance that appropriate inspections are performed during the upcoming outage and that the requisite information for integrity assessment is provided. Some of the important features of the degradation assessment are:

a. Identifying existing and potential degradation mechanisms

b. Choosing techniques to test for degradation based on the probability of detection and sizing capability

c. Establishing the number of tubes to be inspected

d. Establishing the tube integrity limits for condition monitoring and operational assessment

5.4.2.2.2.2 Inspection

Inspections based on degradation assessments are conducted and follow the inspection guidance in the EPRI PWR Steam Generator Examination Guidelines (Reference 11).

Some of the important features of steam generator tube inspections are:

a. Sampling as supported by the degradation assessment

b. Obtaining the information necessary to develop degradation, condition monitoring and operational assessments

c. Qualifying the inspection program by determining the accuracy and defining the elements for enhancing NDE system performance, including technique, analysis, field analysis feedback, human performance and process controls

5.4.2.2.2.3 Integrity Assessment

Steam generator tube integrity is assessed after each steam generator tube inspection. The assessment includes:

a. Condition Monitoring (CM): A backward-looking assessment that confirms that adequate steam generator tube integrity has been maintained during the previous inspection interval.

b. Operational Assessment (OA): A forward-looking assessment that demonstrates that tube integrity performance criteria will be met throughout the next inspection interval.

5.4.2.2.2.4 Tube Plugging and Repairs

Plugging and repair methods are qualified and implemented in accordance with industry standards. The qualification of the plugging and repair techniques considers the steam generator conditions and mockup testing. Repair methods are the means that are used to reestablish the RCS pressure boundary integrity of steam generator tubes without removing the tube from service. Engineering prerequisites and plant conditions are clearly identified prior to performing the plugging or repair. The process is controlled for proper performance of the plugging and repair, including the consideration of post maintenance testing. Additionally, a pre-service inspection of the plugging or repair is performed in compliance with the EPRI "Pressurized Water Reactor Steam Generator Examination Guidelines" (Reference 11).

The EPRI "PWR Steam Generator Tube Plug Assessment" and the EPRI "PWR Steam Generator Sleeving Assessment" provide further guidance on tubing maintenance and repair.

5.4.2.2.2.5 Primary-to-Secondary Leak Monitoring

Primary-to-secondary leak monitoring procedures are established in accordance with the EPRI "PWR Primary-to-Secondary Leak Guidelines" (Reference 12) and in accordance with the Technical Specifications. Monitoring gives operators information that is needed to safely respond to situations in which tube integrity becomes impaired and significant leakage or tube failure occurs.

5.4.2.2.2.6 Maintenance of Steam Generator Secondary-Side Integrity

Secondary-side steam generator components that are susceptible to degradation are monitored if their failure could prevent the steam generator from fulfilling its intended safety-related function. The monitoring includes design reviews, assessment of potential degradation mechanisms, industry experience for applicability, and inspections, as necessary, to provide reasonable assurance that degradation of these components does not threaten tube structural and leakage integrity or the ability of the plant to achieve and maintain safe shutdown.

The program defines when secondary-side visual inspections are to be performed, the scope of inspection, and the inspection procedures and methodology to be used. Additional guidance is provided in the EPRI "Steam Generator Integrity Assessment Guidelines" (Reference 13).

5.4.2.2.2.7 Secondary-Side Water Chemistry

Procedures are prepared for monitoring and controlling secondary-side water chemistry to inhibit secondary-side corrosion-induced degradation in accordance with the EPRI "PWR Secondary Water Chemistry Guidelines" (Reference 14).

5.4.2.2.2.8 Primary-Side Water Chemistry

Procedures are prepared for monitoring and controlling primary-side water chemistry to inhibit primary-side corrosion-induced degradation in accordance with the EPRI "PWR Primary Water Chemistry Guidelines" (Reference 15).

5.4.2.2.2.9 Foreign Material Exclusion

Procedures are prepared for control and monitoring of foreign objects and loose parts to prevent fretting and wear degradation of the tubing. The SG program includes secondary side visual inspections and procedures to preclude the introduction of foreign objects into either the primary or secondary side of the steam generator whenever it is opened for inspections, maintenance, repairs, modifications, or other reasons.

Such procedures include but are not limited to the following:

a. Detailed accountability for all tools and equipment used during any activity when the primary or secondary side is open

b. Appropriate controls and accountability for foreign objects such as eyeglasses and personal dosimetry

c. Cleanliness requirements

d. Accountability for components and parts removed from the internals of major components (e.g., reassembly of cut and removed components)

The potential for introduction of loose parts or foreign objects from secondary-side systems is also considered.

5.4.2.2.2.10 Contractor Oversight

The oversight of contracted work will be performed. Critical aspects of the oversight include, but are not limited to, the following:

a. Review and approval of the scope of work to be performed by a contractor

b. Review and approval of the degradation assessment

c. Review and approval of the contractor's examination procedures

d. Monitoring of the contractor's examination work progress

e. Review and approval of the contractor's deliverables

f. Review and approval of the tube integrity assessment (CM/OA) and associated support documents

5.4.2.2.2.11 Self-Assessment

Self-assessment of the steam generator program is performed by knowledgeable utility personnel or a contractor with independent experts selected by the licensee on a periodic basis. The self-assessment identifies areas for program improvement, along with program strengths.

5.4.2.2.2.12 Reporting

The following reports are included:

a. Reports to be submitted to NRC as specified in the Technical Specifications (Chapter 16), Subsection 5.6.7

b. Non-regulatory reports that include internal reports documenting information within the plant's steam generator program and external reports intended to be shared with other utilities.

The requirements of the steam generator program comply with the requirements in the APR1400 Technical Specifications (Chapter 16).

The steam generator tube surveillance program, including performance criteria for tube integrity, tube repair criteria, and tube inspections, is described in the Technical Specifications (Chapter 16), Subsection 5.5.9. The repair criteria are determined based on NRC RG 1.121 and the EPRI guidelines. Limiting condition for operation and reactor coolant system operational leakage limits, including primary-to-secondary leakage limits, are described in the Technical Specifications (Chapter 16), Subsections 3.4.12 and 3.4.17.

Preservice inspection of all tubes in accordance with ASME Section XI and the EPRI PWR Steam Generator Examination Guidelines described in NEI 97-06 are performed using techniques that will also be used during subsequent inspections.

If Technical Specifications include inspection requirements that differ from those in Article IWB-2000 of Section XI of the ASME Code, the Technical Specifications govern.

5.4.2.3 Tests and Inspections

Prior to, during, and after fabrication of the steam generator, nondestructive tests based on Section III of the ASME Code are performed.

Initial hydrostatic tests of the primary and secondary sides of the steam generator are conducted in accordance with ASME Section III. Leak tests are also performed. Following satisfactory performance of the hydrostatic tests, magnetic-particle inspections are made on all accessible welds.

Inservice inspections of the steam generator are performed in accordance with ASME Section XI, including automatic ultrasonic for SG transition region.

5.4.3 Reactor Coolant Piping

5.4.3.1 Design Basis

Applicable design codes are provided in Table 5.2-1. The reactor coolant loop piping is designed and analyzed for the transients specified in Table 3.9-1. In addition, those nozzles subjected to local thermal transients, caused by fluid entering the reactor coolant

system from an auxiliary system, are analyzed to provide reasonable assurance that the nozzles can accommodate the additional transients.

In addition to being specified as seismic Category I, the piping is designed to provide reasonable assurance that critical vibration frequencies are out of the range expected during normal operation and abnormal conditions. Additional presentations relating to seismic and dynamic analyses and criteria for the reactor coolant piping are contained in Subsections 3.7.2 and 3.9.2, respectively.

Leak-before-break (LBB) is applied to reactor coolant piping, including the surge line. The LBB evaluation procedure is described in Subsection 3.6.3.

5.4.3.2 Description

Each of the two heat transfer loops contains five sections of pipe: one 1,066.8 mm (42 in) internal diameter pipe between the reactor vessel outlet nozzle and steam generator inlet nozzle, two 762 mm (30 in) internal diameter pipes from the steam generator's two outlet nozzles to the reactor coolant pumps suction nozzle, and two 762 mm (30 in) internal diameter pipes from the pumps discharge nozzle to the reactor vessel inlet nozzles. These pipes are referred to as the hot leg, suction legs, and cold legs, respectively. The other major pieces of reactor coolant piping are the surge line, a 300 mm (12 in) pipe between the pressurizer and the hot leg, and the spray line, a 100 mm (4 in) pipe at the pressurizer end reduced to an 80 mm (3 in) pipe and connected to two cold legs.

The 1,066.8 mm (42 in) and 762 mm (30 in) pipe internal diameter are selected to obtain coolant velocities that provide a reasonable balance between erosion-corrosion, pressure drop, and system volume. The surge line is sized to limit the frictional pressure loss through it during the maximum in-surge so that the pressure differential between the pressurizer and the heat transfer loops is no more than 5 percent of the system design pressure. The spray line sizing is discussed in Subsection 5.4.10.

To reduce the amount of field welding during plant fabrication, the 1,066.8 mm (42 in) and 762 mm (30 in) pipes are supplied in major pieces, complete with shop-installed instrumentation nozzles and connecting nozzles to the auxiliary systems. Where required, the nozzles are supplied with safe ends to facilitate field welding of the connecting piping.

Flow restricting orifices (5.6 mm dia. × 25.4 mm long) (7/32 in dia. × 1 in long) are provided in the nozzles for the RCS instrumentation and sampling lines to limit flow in the event of a break downstream of a nozzle.

The analysis, loadings, and limits for the structural evaluation of the reactor coolant piping for each condition are discussed in Subsection 3.9.3.

5.4.3.3 Materials

The materials used in the fabrication of the piping are listed in Table 5.2-2. These materials are in accordance with ASME Section III. The provisions taken to control those factors that contribute to stress corrosion cracking are discussed in Subsection 5.2.3.

Fracture toughness of the reactor coolant piping is discussed in Subsection 5.2.3.

The fracture toughness properties of all ferritic reactor coolant pressure boundary (RCPB) materials are required to be in accordance with the requirements of ASME Section III, NB-2300 and Appendix G of 10 CFR 50. The SA 516 Grade 70 or SA-508 Grade 1 or 1a material used for reactor coolant piping is in accordance with these requirements.

Piping materials are required to meet the impact test requirements of ASME Section III, NB-2300, at a temperature of RT_{NDT} + 33.33 °C (60 °F) or less.

5.4.3.4 Tests and Inspections

Prior to, during, and after fabrication of the reactor coolant piping, nondestructive tests based upon ASME Section III are performed. In addition, the fully assembled reactor coolant system is hydrostatically tested in accordance with the ASME Code. Inservice inspection of the reactor coolant system piping is discussed in Subsection 5.2.4.

5.4.3.5 Reactor Coolant System Design Features for Minimization of Contamination

The APR1400 is designed with features that meet the requirements of 10 CFR 20.1406 (Reference 16) and NRC Regulatory Guide (RG) 4.21 (Reference 17). The basic

principles of NRC RG 4.21 and the methods of control suggested in the regulations are grouped into four design objectives and two operational objectives. as described in Subsection 12.3.1.10. The following evaluation summarizes the primary features that address the design and operational objectives for the RCS.

The RCS has been evaluated for leakage identification from the SSCs that contain radioactive or potentially radioactive materials, the areas and pathways where probable leakage may occur, and the methods of leakage control incorporated in the design of the system. The leak identification evaluation indicated that the RCS is designed to facilitate early leak detection and prompt assessment and response to manage collected fluids. Thus, unintended contamination to the facility and the environment is minimized or prevented by the SSC design, supplemented by operational procedures and programs as well as inspection and maintenance activities.

Prevention/Minimization of Unintended Contamination

a. The RCS components are located inside the reactor containment building. The bottom floor inside the containment building is lined with steel; and the floors of the cubicles inside containment are sloped, coated with epoxy, and provided with drains that are routed to sumps. This design approach prevents unintended contamination of the facility and the environment.

b. The reactor coolant pumps (RCPs) are provided with machined flow passages in seal housing assemblies designed to limit seal leakage.

c. The wetted portions of the system components are fabricated from stainless steel material and are of welded construction for life-cycle planning, thus minimizing leakage and unintended contamination of the facility and the environment.

Adequate and Early Leak Detection

a. Subsection 5.2.5 describes the method of detecting any RCS leakage in detail. Specific items are listed below.

1) Indications of RCS leakage are provided by the containment sump level and flow monitor, an airborne radioactivity monitor, and an atmosphere humidity monitoring system (see Subsection 5.2.5.1).

2) The RCS is equipped with an Acoustic Leak Monitoring System (ALMS), which is described in Subsection 7.7.1.5. This system alarms in the MCR for operator actions to investigate the source of leakage.

3) As stated in Subsection 5.4.2.2.2.5, the primary-to-secondary leakage monitoring is implemented in accordance with EPRI guidelines.

4) A steam generator program is in place (Subsection 5.4.2.2) to monitor integrity of the steam generator tubes for both preventive and corrective actions, as necessary.

5) All of these methods provide the ability to quickly detect any RCS leakage and take operator action as necessary. In addition, the CVCS also monitors coolant inventory for leak identification.

Reduction of Cross-Contamination, Decontamination, and Waste Generation

a. The SSCs are designed with life-cycle planning using nuclear industry-proven materials compatible with the chemical, physical, and radiological environment to minimize waste generation.

b. The primary components are made of steel with a low cobalt content as much as is practicable. This approach minimizes contamination and waste generation.

c. The steam generators are designed in accordance with ASME Code and operating experience to minimize steam generator tube degradation and rupture, thus reducing cross-contamination and associated waste generation.

d. Process sampling connections are provided to determine levels of contamination and other water chemistry requirements. In addition, process radiation

monitoring is provided within the containment building to detect high levels of airborne radioactivity and initiate an alarm in the MCR.

Decommissioning Planning

a. The SSCs are designed for the full service life of the plant and are fabricated as individual assemblies for easy removal during decommissioning.

b. The SSCs are designed with decontamination capabilities. Design features, such as welding techniques and surface finishes, are included to minimize the need for decontamination and the resultant waste generation.

c. The RCS is designed without any embedded or buried piping for contaminated or potentially contaminated fluid, which minimizes the potential for unintended contamination of the environment.

Operations and Documentation

a. The COL applicant is to prepare operational procedures and maintenance programs as related to leak detection and contamination control of RCS (COL 5.4(1)). Procedures and maintenance programs are to be completed before fuel is loaded for commissioning.

b. The COL applicant is to maintain complete documentation of the system design, construction, design modifications, field changes, and operations of RCS (COL 5.4(2)).

Site Radiological Environmental Monitoring

a. The RCS is located in the reactor containment building. Because of its location and associated safety design features, the potential for environmental contamination of soil and groundwater from liquid leakage is minimal. Therefore, RCS inclusion in the site radiological environmental monitoring program is not required. However, a site radiological environmental monitoring

program is included for the whole plant for detection of radiological contamination.

5.4.4 [Reserved]

5.4.5 [Reserved]

5.4.6 Reactor Core Isolation Cooling System (Boiling Water Reactors Only)

This section is not applicable to the APR1400.

5.4.7 Shutdown Cooling System

5.4.7.1 Design Bases

5.4.7.1.1 Summary Description

The shutdown cooling system (SCS) is a safety-related system that is used to reduce the temperature of the reactor coolant system (RCS) in post shutdown periods from the hot shutdown operating temperature to the refueling temperature. The initial phase of a cooldown is accomplished by heat rejection from the steam generators (SGs) to the condenser or atmosphere. After the reactor coolant temperature and pressure have been reduced to approximately 176.7 °C (350 °F) and 31.6 kg/cm^{2}A (450 psia), the SCS is put into operation for normal shutdown cooling to reduce the RCS temperature to the refueling temperature, and to maintain this temperature during refueling.

Additionally, the SCS is used in conjunction with the atmospheric dump valves (ADVs) and the auxiliary feedwater system to cooldown the RCS following a small break loss of coolant accident (LOCA) (refer to Section 6.3). The SCS is also used subsequent to steam and feedwater line breaks, steam generator tube ruptures, and is used during plant startup prior to RCP restart to maintain flow through the core. After an accident, the SCS can be put into operation when the RCS temperature and pressure are below approximately 193.3 °C (380 °F) and 28.1 kg/cm^{2}A (400 psia), respectively.

5.4.7.1.2 Functional Design Bases

The following functional design bases apply to the SCS:

a. The SCS, SCS piping and its support, and components including instrumentation and controls are designed to meet GDC 2, 4, 5, 19, and 34 and BTP 5-4.

b. The SCS is designed to remove decay heat, RCS sensible heat, and heat generated by the shutdown cooling pumps (SCPs) during normal plant cooldown after partial cooldown has been accomplished, and during safe cold shutdown condition.

c. Two independent trains of the SCS are provided, each with its own suction and discharge connections to the RCS.

d. No single active failure prevents at least one complete train of the SCS from being brought on line from the main control room (MCR), whether this is during normal plant cooldown or following a design basis event (DBE).

e. The design bases defined in Subsection 5.4.7.1.1 are met assuming the failure of a single active component during shutdown cooling or a single active or limited leakage passive failure of a component during long-term operations following a DBE. Redundant components and instrumentations are used to provide reasonable assurance of the availability of the SCS. Limited leakage passive failure is defined based on maximum flow through a failed valve packing or pump (e.g., SCP mechanical seal).

f. The SCS is designed so that the SCPs and containment spray pumps (CSPs) are identical and functionally interchangeable. Provisions are made to control the status of those valves used in the SCS/containment spray system (CSS) interconnection. When used in a containment spray configuration, the SCPs are capable of being automatically started by a safety injection actuation signal (SIAS) or containment spray actuation signal (CSAS).

g. The SCS is designed for a pressure of 63.3 kg/cm^{2}G (900 psig) and a temperature of 204.4 °C (400 °F) to address NRC intersystem loss of coolant accident (ISLOCA) issues.

h. No single failure allows the SCS to be overpressurized by the RCS. The SCS components whose design pressure is less than the RCS design pressure are provided with overpressure protection (refer to Subsection 5.4.7.2.3).

i. The SCS reduces the RCS temperature as follows:

1) Two train cooldown (normal operation): With no component failures assuming two trains are in service, the SCS is designed to be capable of reducing reactor coolant temperature as follows:

a) To 60 °C (140 °F) within 24 hours after reactor shutdown

b) To 54.4 °C (130 °F) by the time reactor vessel head stud detensioning operations are started (within approximately 40 hours after reactor shutdown)

c) To 48.9 °C (120 °F) within 96 hours after reactor shutdown

Achievement of the specified temperatures within the prescribed time is accomplished assuming that shutdown cooling is initiated at 3.5 hours after reactor shutdown.

2) One train cooldown (safety shutdown operation): Assuming one train is out of service, the SCS is designed to be capable of reducing reactor coolant temperature as follows:

a) To 93.3 °C (200 °F) within 24 hours after reactor shutdown in conjunction with other heat removal systems (e.g., steam generator ADVs, auxiliary feedwater system)

This meets BTP 5-4 (Reference 18) criteria to be in cold shutdown within a reasonable time, typically defined as 36 hours. Achievement of the specified temperature within the prescribed time is accomplished assuming shutdown cooling initiated at 14 hours after reactor shutdown.

Typical cooldown curves are shown in Figures 5.4.7-1 and 5.4.7-2.

j. The SCS components are designed in accordance with the applicable codes and classifications discussed in Subsection 5.4.7.2.4.

k. Materials are selected to preclude system performance degradation due to the effects of short and long-term corrosion.

l. The SDCHXs are sized to remove decay heat 96 hours after shutdown based upon an average refueling water temperature of 48.9 °C (120 °F) and a component cooling water temperature of 35 °C (95 °F) with an average reactor core burnup of two fuel cycles.

m. The SCS is designed so that the SCPs can be tested at design flow conditions with the reactor operating at power.

n. The SCS is designed to transfer RCS fluid to the CVCS for purification during SCS operation.

o. The SCS is designed to transfer refueling pool water back to the IRWST following refueling operations.

p. The SCS is designed to provide cooling of the IRWST during post-accident feed and bleed operations utilizing the SIS and the safety depressurization and vent system.

q. The SCS is protected by relief valves with sufficient capacity to prevent overpressure in isolated sections and is designed to provide for RCS overpressure protection by the event initiating the pressure from either an operator or equipment malfunction during a low-temperature condition. Discharges from relief valves are collected in the EDT, RDT, or IRWST.

r. The SCS is designed to be operated with reduced RCS inventory including mid-loop condition.

s. The SCS piping and its support are designed to withstand loads arising from the various operating and design conditions. All SCS piping is provided with protection against pipe whip and missiles. Components of the SCS, including associated instrumentation and controls, are designed to perform their designed safety function under the environmental conditions of Section 3.11. The SCS is designed to accommodate seismic loads so that in the event of an SSE, the SCS components will remain functional and are protected natural phenomena such as floods and hurricanes. Fire protection is provided for components and instruments of the SCS. Piping of the SCS connected to the RCS that could be subjected to temperature distributions that would result in unacceptable thermal stress is described in Subsection 3.12.5.9.

t. The control room is provided for shutdown cooling operation under both normal and accident conditions. Adequate SCS instrumentation and controls are provided at appropriate locations outside the MCR to permit prompt shutdown to hot shutdown with a potential capability for subsequent cold shutdown of the reactor using suitable procedures.

u. The SCS is provided with appropriate isolation from the RCS when the RCS is at high pressure. The interlocks associated with six valves on the two SCS suction lines are provided to prevent the valves from opening in the event RCS pressure exceeds the SCS operating pressure.

v. The pumps are provided with minimum flow protection (recirculation lines) to prevent damage when starting against an isolated discharge pathway.

w. All SCS and subsystems connected to the RCS that extend outside the containment boundary are designed to the extent practicable to an ultimate rupture strength at least equal to normal RCS operating pressure. For those interfacing systems or subsystems that do not meet the full RCS ultimate rupture strength requirement, the degree and quality of isolation or reduced severity of the potential pressure challenges is sufficient to preclude an intersystem LOCA.

x. The SCS is designed for a single power unit only that is used only for the SCS. Each train of the SCS is isolated physically and electrically from the other to provide reasonable assurance that a failure in one train, or the effects thereof, will not result in the failure of the other train. The SCS is capable of being powered from both the plant's normal and emergency electrical power sources. In addition, the SCS components and valves are arranged and installed to prevent flooding.

y. The SCS is provided with provisions for a leakage detection and control program to minimize the leakage from those portions of the system outside of the containment that contain or may contain radioactive material following an accident (refer to Section 1.9).

z. For external reactor vessel cooling (ERVC) under hypothetical core melting severe accident conditions, one SCP is used for initial ERVC injection.

5.4.7.2 System Design

5.4.7.2.1 System Schematic

The flow diagram and P&IDs for SCS are shown in Figures 5.4.7-3 and 6.3.2-1, respectively. The SCS contains two heat exchangers, two pumps, and two pump miniflow heat exchangers. One SCP is capable of meeting the safety shutdown cooldown criteria specified above; two SCPs are needed to meet the normal cooldown design criteria. SCS detailed design parameters are given in Table 5.4.7-1. In addition, the mode diagram is shown in Figure 5.4.7-5.

During initial shutdown cooling, a portion of the reactor coolant flows out of the SCS nozzles located on the reactor vessel outlet pipes (hot legs), and is circulated through the SDCHXs by the SCPs. The return to the RCS is through SIS direct vessel injection (DVI) nozzles. The pressure and temperature of the RCS varies from 31.6 kg/cm^{2}A (450 psia) and 176.7 °C (350 °F) at the initiation of shutdown cooling to atmospheric pressure and 48.9 °C (120 °F) at refueling conditions. The SCS suction side pressure and temperature follow RCS conditions. The discharge side pressure is higher by an amount equal to the pump head. The operation temperature at the SDCHX outlet is lower than the RCS temperature.

Shutdown cooling flow is measured by orifice flow meters installed in each train of the SCP discharge piping. The information provided is used by the operator for flow control during the SCS operation. The cooldown rate is controlled by adjusting flow through the heat exchangers with throttle valves that are located in the outlet piping of each heat exchanger. The operator maintains a constant total SCS flow to the core by adjusting the heat exchanger bypass flow to compensate for changes in flow through the heat exchangers.

5.4.7.2.2 Component Description

a. Shutdown cooling heat exchangers

The design temperature is based upon the temperature of the reactor coolant at the initiation of shutdown cooling plus a design tolerance. The SDCHXs are used to remove core decay, RCS sensible heat, and SCP heat during normal plant cooldown after a partial cooldown has been accomplished and during safe cold shutdown conditions. The SDCHXs are designed to maintain an average refueling water temperature of 48.9 °C (120 °F), with a component cooling water temperature of 35 °C (95 °F) at 96 hours after shutdown following an assumed reactor core average burnup of two fuel cycles. A fouling resistance is assumed for additional margin for heat exchanger performance.

b. Instrumentation

The instrumentation and controls for the SCS are designed in accordance with the applicable portions of the IEEE Standards, as described in Subsection 7.1.2.

The operation of the SCS is controlled and monitored using dedicated redundant instrumentation that provides the capability to monitor the cooldown rate and shutdown cooling flow to detect degradation of flow or SCS heat removal capabilities. The instrumentation provided for monitoring SCS components during normal SCS operation is discussed below, and is also summarized in Section 7.5.

1) Shutdown cooling heat exchanger inlet and return line temperature

The temperature of each shutdown cooling heat exchanger inlet and return line (combined HX and HX bypass flow) is indicated in the MCR and at a remote location. Recording capabilities for the heat exchanger inlet temperature and return line temperature are also provided in the MCR for each SCS train. These indications are used to provide a measurement of system performance, and provide information allowing the operator to adjust the cooldown rate.

2) Shutdown cooling heat exchanger outlet temperature

The temperature at the outlet of each heat exchanger is indicated in the MCR. This instrument functions to monitor heat exchanger performance by directly measuring the outlet temperature.

3) Shutdown cooling pump suction and discharge pressure

The pump suction and discharge pressures are indicated in the MCR and function to monitor pump performance. Low pressure alarms are provided for SCP discharge in the MCR.

4) Shutdown cooling flow

A shutdown cooling flow indicator in each train of the SCS measures shutdown cooling flow, and indicates the flow rate in the MCR. A low flow alarm is provided in the MCR. The alarm alerts the operator to a low flow condition that may lead to a loss of shutdown cooling due to either a loss of adequate pump suction or the closure of a system valve.

5) SCS valve position indication

a) Open/closed position indication is provided in the MCR for SCP local manual isolation valves SI-106, -107, -578, and -579. An alarm is provided to alert the operator when a valve is not fully open.

b) Open/closed position indication is provided in the MCR for IRWST recirculation line isolation valves SI-300, -301, -688, and -693.

c) Open/closed and full range 0 to 100 percent position indication is provided in the MCR and at a remote location for SDCHX and heat exchanger bypass flow control valves SI-310, -311, -312, and -313.

d) Open/closed and full range 0 to 100 percent position indication is provided in the MCR for IRWST recirculation line flow control valves SI-314 and SI-315.

e) Open/closed position indication is provided in the MCR for SCS/CSS cross connect valves SI-340, -341, -342, and -343.

f) Open/closed and full range 0 to 100 percent position indication is provided in the MCR and at a remote location for SCS DVI line isolation/flow control valves SI-600 and SI-601.

g) Open/closed position indication is provided in the MCR and at a remote location for SCS suction line isolation valves SI-651, -652, -653, -654, -655, and -656. Valve position alarms are described in Subsection 5.4.7.2.3.

h) Open/closed and full range 0 to 100 percent position indication is provided in the MCR and at a remote location for SCS warm-up line isolation/flow control valves SI-690 and SI-691.

c. Piping

All SCS piping is austenitic stainless steel. All piping joints and connections are welded, except for a minimum number of flanged connections that are used to facilitate equipment maintenance or accommodate component design.

The SCS piping is designed to accommodate venting the SCPs to the RCS, if necessary, after the pumps have been stopped. High points in the SCS piping are minimized.

d. Valves

The location of valves, along with their type, type of actuator, position during the normal operating mode of the plant, type of position indication, and failure position is shown in Figure 6.3.2-1.

1) Relief valves

Protection against the overpressurization of components within the SCS is provided by conservatively designing the system piping, appropriate valving between high pressure sources and lower pressure piping, and by relief valves. The pressure of the SCS suction lines, up to and including SI-653 and SI-654, is designed to be equal to the RCS design pressure. In addition, the pressure of the SCS discharge lines, up to and including SI-168 and SI-178 from DVI nozzles, is designed to be equal to the RCS design pressure. Relief valves are provided as required by applicable codes. All relief valves are of the totally enclosed, pressure tight type, with suitable provisions for gagging.

Thermal relief valves (SI-169, -187, -188, -287, -289, -422, -423, -450, -461, -462, -466, and -467) are provided in the system to prevent overpressurization due to thermal transients in isolated sections of piping. A relief valve on each of the SCS suction lines (SI-179, -189) is sized to have sufficient capacity to provide LTOP for the RCS due to accidental operation of the SIPs, pressurizer heaters, the charging pump, and the reactor coolant pump (RCP) while in shutdown cooling (see Table 5.2-3). These relief valves also can prevent overpressurization of the SCS.

2) Actuator-operated throttling and stop valves

The failure position of each valve on loss of actuating signal or power supply is selected to provide reasonable assurance of safe operation. System

redundancy is considered when defining the failure position of any given valve. Valve position indication is provided at the main control panel. Valve control with appropriate status control on the main control panel is provided where necessary for efficient and safe plant operation. All motor operated valves consist of a manual override handwheel. All actuator operated valves have stem leakage controlled by a double packing with a lantern ring leak-off connection.

Isolation valves are provided to isolate equipment for maintenance and to align the SCS for operation (SI-310, -311, -312, -313 for SDCHX, SI-340, -341, -342, -343 for SCS/CSS cross-connection and SI-391, -393, -395 for ERVC injection). Throttle valves (SI-310, -312, -311, -313 for heat exchanger tube side flow control, and SI-690, -691 for SCS warmup line flow control, SI-600, -601 for SCS flow control) are provided for remote control. The SCS suction isolation valves (SI-651, -653, -655, -652, -654, -656) are interlocked to prevent overpressurizing the SCS. The ERVC injection line isolation valves (SI-391, -393) are normally power removed to prevent inadvertent ERVC injection.

3) Vent and drain valves

Vent and drain valves are provided for reasonable assurance that maintenance can be performed on each SCS component.

e. Shutdown cooling pumps

The function of the SCPs is to provide flow through the SDCHXs and reactor core for normal plant shutdown operation or for long term post-accident core cooling. During normal power operation, the SCPs are isolated from the RCS by redundant motor-operated valves in series on the suction side of the pumps and a combination of redundant check valves and motor-operated valves on the discharge side of the pumps.

The shutdown cooling and containment spray functions are evaluated to select a single pump to serve both functions. The flow available with a single SCP is

sufficient to either maintain an acceptable cooldown rate (41.7 °C/hr (75 °F/hr) maximum) during shutdown cooling operation or supply the CSS. Net positive suction head (NPSH) available exceeds NPSH required for both pumps for all conditions under which the pumps will be operated.

The SCP data are provided in Table 5.4.7-1. The design temperature for the SCPs is based upon the temperature of the reactor coolant at the initiation of shutdown cooling (176.7 °C (350 °F) nominal) plus a design tolerance, resulting in a design temperature of 204.4 °C (400 °F). The characteristic curve of an SCP is provided in Figure 5.4.7-4.

The SCPs are vertical, single-stage centrifugal units equipped with mechanical seals backed up by a bushing, with a leak-off to collect the leakage past the seals. The seals are designed for operation with a pumped fluid temperature of 204.4 °C (400 °F). The pump motors are specified to have the capability of starting and accelerating the driven equipment, under load, to design point running speed within 5 seconds, based upon an initial voltage of 75 percent of the rated voltage at the motor terminals, and increasing linearly with time to 90 percent voltage within 3 seconds, and increasing to 100 percent voltage in another 2 seconds. The rated power of the SCP motor is be determined at a sufficient level to operate at any point from shut-off to runout flow conditions.

The pumps are provided with drain and flushing connections to facilitate reduction of radiation levels before maintenance. The pressure containing parts are fabricated from stainless steel; the internals are selected for compatibility with boric acid solutions. The pumps are provided with minimum flow protection (recirculation lines) to prevent damage when starting against an isolated discharge pathway.

The SCPs are designed for operation at any point on the characteristic curve from minimum bypass recirculation flow (miniflow) to runout flow. A miniflow path is provided for each pump to provide protection in the event that a pump is inadvertently operated against a closed discharge line and miniflow capacity is sufficient to protect the pump against hydraulic instability. Each miniflow path is routed from pump discharge back to pump suction and contains a heat

exchanger for cooling and an orifice sized to meet pump vendor miniflow requirements. A locally operated manual valve is also provided to facilitate pump maintenance; the valve is locked open during all plant operating modes.

Runout flow for each SCP is limited when the SCS is set up during preoperational testing. A flow-limiting device, located in each SCS train downstream of the SCS/CSS discharge side cross-connection, prevents pump runout flow from exceeding the maximum operation flow to protect each SCP from possible damage.

In the SCS configuration, each SCP takes suction from an RCS hot leg and returns flow to the RCS through a DVI nozzle. In this closed recirculation loop, the RCS pressure does not affect the pump flow rate. The SCPs are not required to operate at a reduced flow, such as what may occur in a safety injection application following a small break LOCA. For post-accident long-term cooling, shutdown cooling is initiated after the RCS fluid level has stabilized and the RCS pressure and temperature have been reduced to shutdown cooling entry conditions. The SCP flow is manually controlled by the operator from the MCR. The SCP flow through each SDCHX is adjusted to control the RCS cooldown rate, and flow that bypasses each heat exchanger is adjusted to maintain total SCP flow in the range from the design point to the runout limit. The ability to maintain a constant total pump flow during shutdown cooling precludes low flow operations, described in the NRC Bulletin 88-04 (Reference 19), which may cause pump damage resulting from flow instability phenomena.

f. Shutdown cooling pump miniflow HXs

The shutdown cooling pump miniflow heat exchangers remove heat generated by running SCP during operating at miniflow (i.e., against a closed discharge path). Required shutdown cooling pump miniflow heat exchanger performance is based on removing heat to limit the temperature increase.

5.4.7.2.3 Overpressure Prevention

Overpressurization of the SCS by the RCS is prevented in the following ways:

a. The SCS suction line isolation valves (SI-651, -652, -653, and -654) are powered by four independent power supplies so that a fault in one power supply or valve will neither line up the RCS to either of the two SCS trains inadvertently nor prevent the initiation of shutdown cooling with at least one SCS train.

b. Relief valves SI-179 and SI-189, located on the SCS suction lines, are sized to provide LTOP of the RCS (see Subsection 5.2.2). Since the LTOP relief valve setpoint pressure is much lower than the design pressure of the SCS, these valves also provide overpressure protection of the SCS. An interlock associated with the shutdown cooling suction isolation valves prevents the isolation valves from being opened at RCS for normal shutdown cooling pressures above 31.6 kg/cm^2A (450 psia). The interlock setpoint is calculated considering tolerances necessary to provide reasonable assurance that the pressure at the valves will not exceed the LTOP valve setpoint when the SCS is aligned to the RCS for normal shutdown cooling. The instrumentation and controls that implement the interlock are described in Section 7.6.

c. The redundant SCS suction line isolation valves inside the containment are designed for full RCS pressure with the second valve SI-653 (Train A) and SI-654 (Train B) forming the pressure boundary and safety class change. The motor operators for SI-651 and -652 are sized to open or close against a differential pressure of 158.1 kg/cm^2D (2,250 psid). This is consistent with Generic Letter 89-10 (f 20), which requires that safety-related motor-operated valves (MOVs) function when subjected to design basis conditions (both normal and abnormal events).

d. Alarms on SI-651, -652, -653, and -654 annunciate when the SCS suction line isolation valves are not fully open (with concurrent low RCS temperature). Also, if SI-651 and -653 or SI-652 and -654 valves are open, and RCS pressure increases to the maximum pressure for SCS operation, an alarm will notify the operator that a pressurization transient is occurring during low temperature conditions.

e. Relief valves are provided as discussed in Subsection 5.4.7.2.2.

f. System piping is conservatively designed and maximum utilization of welded connections is made.

g. The response of the SCS to intersystem LOCA challenges is presented in Subsection 19.2.2.5.

5.4.7.2.4 Applicable Codes and Classifications

a. The piping and valves from the RCS, up to and including SI-653 and -654, are designed to ASME Section III, NB.

b. The remainder of the piping, valves, and components of the SCS, with the exception of the above piping and valves from the RCS, are designed to ASME Section III, NC.

c. The component cooling water side of the SDCHX is designed to ASME Section III, ND.

d. The power operated valves are designed to applicable IEEE Standards.

e. The SCS is a seismic Category I system.

5.4.7.2.5 System Reliability Considerations

The SCS is designed to perform its design function assuming a single failure, as described in Subsection 5.4.7.1.2. To provide reasonable assurance of availability of the SCS when required, redundant components and power supplies are used. The RCS can be brought to refueling temperature utilizing one of the two redundant SCS trains. However, with the design heat load, the cooldown would be considerably longer than the specified 96-hour time period. Since the SCS is essential for a safe (cold) shutdown of the reactor, it is a seismic Category I system and designed to remain functional in the event of a safe shutdown earthquake.

The SCS does not utilize any pneumatically operated valves. The instrumentation controls and electric equipment pertaining to the SCS is designed to applicable portions of

IEEE Standards 308 and 603. In addition to normal offsite power sources, physically and electrically independent and redundant emergency power supply systems are provided to power safety-related components (refer to Chapter 8 for further information).

For long-term performance of the SCS without degradation due to corrosion, only materials compatible with the pumped fluid are used. Environmental envelopes are specified for system components to provide reasonable assurance of acceptable performance in normal and applicable accident environments (refer to Section 3.11).

A limited leakage passive failure is defined as the failure of a pump seal or valve packing, whichever is greater. The maximum leakage is expected to be from a failed SCP seal. Leakage to the pump compartment drains to the room sump. From there, it is pumped to the waste management system. The sump pumps in each room will handle expected amounts of leakage. If leakages are greater than the sump pump capacity, the affected SCS train will be isolated. In the event of a limited leakage passive failure in one train of the SCS, continued core cooling is provided by the unaffected independent SCS train. The limited leakage passive failure is identified via appropriate leak detection provisions. Makeup of the leakage is provided by manually aligning the SIS to the IRWST, or by opening the safety injection tank isolation valves. The affected SCS train can then be isolated and core cooling continued with the other train.

5.4.7.2.6 Manual Actions

a. Plant cooldown

Plant cooldown is a series of manual operations that bring the reactor from hot shutdown to cold shutdown.

Cooldown to approximately 176.7 °C (350 °F) is accomplished by releasing steam from the secondary side of the steam generators. An inadvertent SIAS or safety injection tank (SIT) discharge is precluded during a controlled cooldown by manually decreasing the SIAS setpoint, and depressurizing and isolating the SITs.

When the RCS temperature and pressure decrease to 176.7 °C (350 °F) and the maximum pressure for SCS operation (31.6 kg/cm^{2}A (450 psia)), the SCS is used.

The RCS needs to be depressureized to below the maximum pressure for SCS operation in order to clear the permissive SCS interlock (see Subsection 5.4.7.2.3).

If the SCS suction line relief valves (SI-179 and SI-189) are not aligned to the RCS before cold leg temperature is reduced to below the maximum RCS cold leg temperature requiring LTOP, an alarm will notify the operator to open the SCS suction line isolation valves (SI-651, -652, -653, and -654). The maximum temperature requiring LTOP is based upon the evaluation of applicable RCS pressure/temperature curves (see Subsection 5.2.2.2.2.2).

Shutdown cooling is initiated using the SCPs. The SCS is warmed up and then placed in operation.

A maximum rate of cooldown (not to exceed 41.7 °C/hr (75 °F/hr)) is maintained by adjusting the flow rate of reactor coolant through the SDCHXs, utilizing the SDCHX outlet flow control valves in conjunction with the SDCHX bypass flow control valves. With the shutdown cooling flow indicators, the operator maintains a total shutdown cooling flow rate by adjusting the amount of coolant, which bypasses the SDCHXs.

When the system is at first put into operation, the temperature difference for heat transfer across the SDCHX is large, and only a portion of the total flow from the SCPs is diverted through the heat exchangers. As the cooldown proceeds, the temperature differential across the heat exchanger decreases, and the flow rate through the heat exchangers is increased to maintain the maximum permissible cooldown rate.

The flow to the SDCHXs is increased periodically until full SCP flow through the heat exchangers is attained. A graph of RCS temperature versus time after shutdown for a typical normal design basis cooldown is presented in Figure 5.4.7-1.

Shutdown cooling is continued throughout the entire period of plant shutdown to maintain an average refueling water temperature of 48.9 °C (120 °F) or less. Whenever shutdown cooling is in operation, shutdown purification flow may be initiated through the CVCS.

b. Plant heatup

Plant heatup is a manual operation process that brings the RCS from cold shutdown to hot standby. The SDCHXs are bypassed to maintain flow through the core without the heat removal effect of the heat exchangers. Flow can be initiated to the heat exchangers if necessary to control the heatup rate. When the RCPs can be run and the pressure-temperature limitations for LTOP are no longer necessary, the SCPs are stopped and the system is isolated for the standby mode.

c. Abnormal operation

1) Initiation of shutdown cooling with the most limiting single failure (loss of one shutdown cooling train) can be accomplished via plant procedures using equipment in the operable train.

2) The SCPs can be used alternatively as CSPs. In addition, the CSPs can be used alternatively as SCPs.

3) The SCPs, in conjunction with the SDCHXs, can be used for IRWST cooling.

d. Design basis event operations

Following certain DBEs (feedwater line break, small break LOCA, steam line break, or loss of offsite power), shutdown cooling can be initiated with RCS hot leg conditions that exceed the normal shutdown cooling initiation temperature of 176.7 °C (350 °F). However, shutdown cooling is never initiated at conditions that exceed the design temperature of 204.4 °C (400 °F) for the SCS components.

e. Operator response to an LTOP transient alarm

During SCS operation, if suction line isolation valves SI-651 and -653 or SI-652 and -654 are open, and RCS pressure exceeds the maximum pressure for SCS operation, a LTOP transient alarm will occur in the MCR. The LTOP relief valves SI-179 and SI-189, located downstream of SI-653 and SI-654, respectively, will open if pressure at the valve increases to the relief valve set pressure of 37.3

kg/cm^2 (530 psig). The limiting events that cause a pressurization transient during low temperature conditions are evaluated in Subsection 5.2.2. During plant startup, the LTOP transient alarm will also occur if the SCS suction valves fail to isolate the SCS from the RCS as pressure is increased.

The principal operator actions taken any time the LTOP transient alarm occurs are to identify and terminate the cause of the pressurization. LTOP relief valve availability is maintained throughout the transient, as long as overpressure protection is required.

During RCS heatup, LTOP relief valve availability is required up to an RCS temperature equal to the LTOP disable temperature, as described in Subsection 5.2.2.2.2.2. The operator will isolate the SCS and LTOP relief valves from the RCS prior to exceeding an RCS temperature of 176.7 °C (350 °F). During RCS heatup between the LTOP disable temperature and 176.7 °C (350 °F) if an LTOP transient alarm occurs, the operator will close the SCS isolation valves to prevent a depletion of RCS inventory. At temperatures above the LTOP disable temperature, overpressure protection of the RCS is provided by the pressurizer POSRVs. The operator assesses SCS status and overall plant status prior to proceeding with RCS heatup.

If the operator determines that the LTOP transient alarm is due to an event at RCS temperature conditions requiring the protection via LTOP relief valve, the operator closes downstream SCS suction line isolation valves SI-655 and SI-656 to minimize the impact of the transient on the rest of the SCS. After RCS pressure is reduced below the pressure that corresponds to the relief valve blowdown pressure, the operator confirms that the LTOP relief valves have been reseated by monitoring RCS pressure and level and holdup volume tank level. If an LTOP relief valve is stuck open, the operator takes actions to provide adequate RCS makeup inventory and core cooling.

f. Operation with reduced RCS inventory

Reduced inventory including mid-loop operation is necessary for increasing the plant availability. During this operation, the RCS water level is lowered by approximately 0.9 m (3 ft) below the reactor vessel flange.

The APR1400 design includes the following features to facilitate continued SCS operations during reduced RCS inventory in compliance with the GL 88-17 (Reference 20):

1) Two independent instrumentation systems are provided for RCS level measurement. These instruments function to monitor the RCS level in order to preclude SCS suction line vortexing and subsequent air entrainment. Level instrument types and corresponding instrumentation ranges are optimized to encompass all reduced RCS inventory conditions.

2) Two independent thermocouples are provided to measure core exit temperature.

3) Instruments that monitor the state of the SCS performance (such as pump suction pressure, pump discharge pressure, flow rate, pump motor current, and RCS heat removal degradation) are provided. These instruments function to provide sufficient information to indicate an approaching SCS malfunction due to the formation of vortexing and subsequent air entrainment.

4) SCS suction line isolation valves are not automatically closed in the event of RCS pressurization during the shutdown cooling operation. This precludes a loss of shutdown cooling by automatic closure of the isolation valves.

Although the features described above do not describe SCS instrumentation completely, the descriptions are provided in this section because they focus on precluding SCS failures due to loss of the SCP operations.

5.4.7.3 Performance Evaluation

The capability of the SCS to reduce RC temperature is evaluated using heat balance calculations between the RCS and SCS at stepped intervals following the initiation of SCS

operation. The stepped decrease versus time of component cooling water (CCW) temperature though the shell side of SDCHX is conservatively assumed, based on the maximum CCW temperature of the CCWS design. The basic purpose of shutdown cooling process using the SCS is to transfer the decay of the primary loop (RCS) to the secondary loop (CCW). Once the key process parameters such as SCS initiation conditions, RCS volume, effective heat transfer area, heat transfer rate, resistance coefficient of SDCHX, and SCP miniflow HX are identified as the input parameters, the time-dependent decay heat removal performance is analyzed. At each time step a series of equations is used in an interactive process to determine the maximum amount of heat removal through the SDCHX and SCP miniflow HX.

The design condition of the SCS is taken at 96 hours after plant shutdown. At this point, the design basis is to maintain a 48.39 °C (120 °F) average refueling temperature with a CCW temperature of 35 °C (95 °F). Two SDCHXs and two SCPs are assumed to be in operation at the design flow. The SDCHX size is determined at this point because it requires the greatest heat transfer area due to the relatively small ΔT between primary fluid and component cooling water. The design input heat load at 96 hours is based on decay heat at 96 hours after reactor shutdown, assuming an average reactor core burnup of two fuel cycles. Additional energy input to the RCS from two SCPs running at design flow rate is also included with no credit taken for component energy losses to the external environment. The cooldown rate is limited to a maximum of 41.7 °C/hr (75 °F/hr) throughout the cooldown. A typical two-train cooldown curve is shown in Figure 5.4.7-1.

With the most limiting single active failure in the SCS, the RCS temperature can be brought to 93.3 °C (200 °F) within 24 hours following shutdown using one SCP and one SDCHX, assuming that the RCS pressure and temperature are reduced to SCS initiation conditions by other heat rejection means within 14 hours. A typical single-train cooldown curve is shown in Figure 5.4.7-2.

The SCS is designed using a philosophy of total physical separation of redundant trains so that the system can carry out its safety function assuming a single active failure during both normal and short-term (period of operation of up to 24 hours following an initiating event) post-accident modes and a single active or passive failure during long-term post-accident modes after event initiation. Total train separation provides reasonable assurance that a

single failure in one train cannot preclude the other train from accomplishing its safety functions. A failure modes and effects analysis for the SCS is presented in Table 5.4.7-2.

Reasonable assurance of adequate sampling capability of the SCS is provided for all modes of SCS operation to verify boron concentration and fission product activity.

5.4.7.3.1 Performance Evaluation Assuming the Most Limiting Single Failure and Only Onsite Power Available

The results of a computer simulation of a natural circulation cooldown (NCC) of NSSS from normal operation to SCS entry condition are presented in this section. The simulation is in conformance with BTP 5-4 requirements. These requirements include the use of only safety-grade equipment, the concurrent loss of offsite power, and a single failure.

5.4.7.3.1.1 Natural Circulation Cooldown Sequence

The following sequence was followed to achieve a successful NCC analysis:

a. Following the reactor trip, the operator manually controls the ADVs to restore and maintain the secondary pressure to no-load hot standby conditions (77.3 kg/cm^{2}A (1,100 psia)).

b. The steam generator water level is restored, and then maintained at the normal water level by manually controlling the auxiliary feedwater flow rate within the available capacity of the auxiliary feedwater system.

c. After the 4-hour hot standby period, the RCS is depressurized by using the pressurizer vent until the RCS subcooling margin reaches the minimum limit value of 15 °C (27 °F).

d. RCS cooldown with a 27.8 °C/hr (50 °F/hr) cooldown rate is initiated. This rate is slower than the administrative maximum cooldown rate of 41.7 °C/hr (75 °F/hr) and hence conservatively increases the auxiliary feedwater usage.

e. One of the three SIS pumps is throttled (three trains of the SIS are available due to the assumed single failure of one diesel generator) for the RCS boration and inventory control.

f. The pressurizer level is maintained between 30 percent and 70 percent.

g. The RCS subcooling margin is controlled between 15 °C (27 °F) and 83.3 °C (150 °F).

h. The operator utilizes the pressurizer vent of the RCGVS to manually depressurize the RCS. This is the principal means of achieving the necessary SCS pressure entry conditions. The pressurizer vent is actuated during conditions of high RCS subcooling and terminated when the subcooling margin decreases to the minimum value or when steam void in the reactor vessel upper head (RVUH) reaches a maximum value.

i. The operator uses the RVUH gas vent of the RCGVS to reduce the volume of an existing steam void and draw colder RCS fluid into the RVUH, thus cooling the RVUH region and depressurizing the RCS.

j. The operator performs the cooldown process until the RCS subcooling margin reaches the maximum value after the steam void is collapsed by the RVUH gas vent.

5.4.7.3.1.2 Natural Circulation Cooldown Analysis Results

Immediately following the loss of offsite power with the assumed loss of power to the RCPs, flow through the core decreases as the RCPs coast down. This immediately results in a core protection calculator reactor trip on low reactor coolant pump shaft speed. Full natural circulation flow is then established in the RCS in less than 10 minutes.

Shortly after the reactor trip, the operator utilizes the ADVs to stabilize the NSSS at hot standby conditions. Pressurizer level stabilizes at approximately 40 percent. The auxiliary feedwater flow to the steam generators is manually controlled to slowly refill the

steam generators without overcooling the RCS. The plant is maintained at hot standby for 4 hours consistent with the BTP 5-4 requirements.

At 4.0 hours after the initiating event (the loss of offsite power), the operator opens pressurizer gas vent valve of the RCGVS to depressurize the RCS to the point where the RCS subcooling margin decreases to 15 °C (27 °F). The use of the pressurizer gas vent valve serves to decreases the RCS pressure to slightly below the minimum shutoff head of the safety injection pumps. The operator then manually starts the safety injection pumps to provide inventory control with borated water during the subsequent RCS cooldown.

After the pressure reaches 113.6 kg/cm^{2}A (1,616 psia), which corresponds to the RCS subcooling margin of 15 °C (27 °F), the operator begins RCS cooldown with a 27.8 °C/hr (50 °F/hr) cooldown rate by increasing steam flow through ADVs.

At 6.8 hours, the RCS subcooling margin exceeds the maximum limit of 83.3 °C (150 °F), at which the operator stops cooldown to prevent RCS overcooling and opens the pressurizer gas vent valve.

As the RCS pressure decreases, the coolant in the RVUH reaches saturation condition and a steam void forms. The steam void in the RVUH continues to increase in size as long as the pressurizer gas vent valves remain open because the RVUH fluid temperature exceeds the saturation temperature and the fluid vaporizes. When the steam void in the RVUH increases to 21.2 m^3 (750 ft^3), the operator closes the pressurizer gas vent valves and then opens the RVUH gas vent valves to collapse the steam void.

At 7.5 hours, the steam void in the RVUH is reduced to the smallest measurable value, and the operator closes the RVUH gas vent valve and resumes the RCS cooldown with a cooldown rate of 27.8 °C/hr (50 °F/hr).

At 9.1 hours, the RCS subcooling is again reached at the maximum limit of 83.3 °C (150 °F), and the operator stops cooldown to relieve the RCS overcooling and opens the pressurizer gas vent valve. This avoids exceeding the hot leg subcooling limit and reduces the RCS pressure. The steam void in the RVUH rapidly grows again to 21.2 m^3 (750 ft^3) where the operator closes the pressurizer gas vent valve and re-opens the RVUH gas vent

valve in order to collapse the void. After the RVUH void decreases, the operator resumes the RCS cooldown.

At 10.5 hours, the RCS pressure and temperature reach the shutdown cooling entry conditions of 31.6 kg/cm^{2}A (450 psia) and 176.7 °C (350 °F), respectively. The final collapsing of the steam void that still exists in the RVUH is accomplished using a combination of the RVUH gas vent and the SIS.

The amount of safety-grade auxiliary feedwater used is 1,140 m^3 (300,000 gal). This demonstrates that the NCC to the shutdown cooling system entry conditions, according to the BTP 5-4 requirements, can be performed well within the limit of auxiliary feedwater storage tanks capacity (i.e., minimum capacity of 1,514 m^3 (400,000 gal)). The NCC analysis results are provided in Figures 5.4.7-6 through 5.4.7-12.

5.4.7.3.1.3 Conclusions

The NSSS NCC analysis results demonstrate that a cooldown and depressurization to the SCS entry conditions are achievable within the BTP 5-4 requirements. The total auxiliary feedwater usage is well within the minimum available capacity. It is concluded that the NSSS can be cooled and depressurized to the SCS entry conditions in conformance with the restrictive assumptions of the BTP 5-4.

5.4.7.4 Tests and Inspections

5.4.7.4.1 Preoperational Testing

Preoperational tests are conducted to verify the proper operation of the SCS. The preoperational tests include calibration of instrumentation, verification of adequate cooling flow, and verification of the operability of all associated valves. In addition, a preoperational hot functional performance test is made on the installed SDCHXs as a part of the pre-core hot functional test programs. Refer to Chapter 14 for further details on these tests.

For the preoperational test for the SCP miniflow rate, ultrasonic flow meters are temporarily installed in the SCP miniflow heat exchanger inlet and outlet lines. The SCS

also undergoes a series of preoperational hydrostatic tests conducted in accordance with ASME Section III.

Preoperational test results are used to perform analyses to confirm that the as-built SCS fulfills operability and provides a level of performance that satisfies design analyses for a safe cold shutdown.

The LTOP relief valves, SI-179 and SI-189, located on the SCS suction line are shop-tested. Relieving capacity of the valves is certified in accordance with ASME Section III, NC-7000. Valve set pressure is verified by actual shop testing with water.

An inspection of the as-built piping is conducted to verify that the SCP has no loop seals and is oriented downward or horizontal except for an upward section connecting to the pump suction flange.

5.4.7.4.1.1 Flow Testing

Each installed SCS train is tested to measure SCP developed differential pressure at a flow rate equal to or greater than the pump design flow rate. An analysis is performed to convert the measured differential pressure at the test temperature to a pump head. Tests and analyses are performed with SCS suction and return aligned to the RCS, and aligned to the IRWST.

Functional tests are performed with flow aligned to the RCS to confirm that the maximum flow rate does not exceed the limit described in Subsection 5.4.7.2.2. These tests are performed below an RCS temperature of 49 °C (120 °F).

Testing is performed to confirm that the SCP return line to the IRWST allows each SCP to be operated at a flow equal to or greater than design flow during inservice testing. Analyses are performed to convert the measured pump differential pressure to a pump head.

The available NPSH to the SCPs is determined based on as-built elevations, piping arrangements and system performance parameters measured during testing. Measured pump suction pressures and flow rates are used in an analysis to demonstrate that adequate NPSH is provided to each SCP assuming the following conditions:

a. Minimum RCS water level and maximum RCS water temperature for reduced inventory operation

b. Maximum design basis RCS water temperature for SCS operation (not at reduced inventory)

c. Maximum design basis IRWST water temperature and minimum IRWST water level for the SCS operating in the IRWST cooling mode

d. As-built pressure losses for pump inlet piping and components

The calculated minimum available NPSH meets or exceeds the NPSH required by the pump vendor.

Testing is performed to demonstrate that a containment spray pump (CSP) performs the pumping function of the designated SCP. The CSP is tested by aligning its suction to the SCP suction piping and its discharge to the SCP discharge piping. The CSP provides a flow rate through the SDCHX that is greater than or equal to the SCP design flow rate.

5.4.7.4.1.2 Heat Removal Capability

Tests are performed to measure shutdown cooling flow rates at the combined discharge of the SDCHX and heat exchanger bypass line using permanently installed instrumentation.

A test is performed on SDCHXs during pre-core hot functional testing. Shutdown cooling and component cooling water flow rates to each heat exchanger, reactor coolant temperatures at SDCHX inlet and outlet, and component cooling water temperature at SDCHX inlet are measured. Test results are used to verify that the heat removal capability of each SDCHX meets the heat removal capability required to achieve a safe cold shutdown. The performance demonstrates a heat removal capacity to remove heat from the reactor coolant and transfer heat to the component cooling water system.

5.4.7.4.2 Inservice Testing and Inspection

Inservice testing of SCPs and safety-related valves is addressed in Subsection 3.9.6.

Inservice inspection of SCS piping and components is addressed in Section 6.6 and Subsection 5.2.4.

5.4.7.4.3 Design Features for Minimization of Contamination

The APR1400 is designed with specific features to meet the requirements of 10 CFR 20.1406 and Regulatory Guide 4.21. The basic principles of NRC RG 4.21 and the methods of control suggested in the regulations are grouped into four design objectives and two operational objectives , as described in Subsection 12.3.1.10. The following evaluation summarizes the primary features to address the design and operational objectives for the shutdown cooling system.

The SCS has been evaluated for leakage identification from the SSCs that contain radioactive or potentially radioactive materials, the areas and pathways where probable leakage may occur, and the methods of leakage control incorporated in the design of the system. The leak identification evaluation indicated that the SCS is designed to facilitate early leak detection and the prompt assessment and response to manage collected fluids. Thus, unintended contamination to the facility and the environment is minimized and/or prevented by the SSC design, operational procedures and programs, and inspection and maintenance activities.

Prevention/Minimization of Unintended Contamination

a. The SCS components are located in individual cubicles inside the auxiliary building. The floors are sloped, coated with epoxy, and provided with drains that are routed to the local drain hubs and sumps. This design approach prevents unintended contamination of the facility and the environment.

b. The SCS components (pumps, heat exchangers, piping) are fabricated from stainless steel and are of welded construction, thus minimizing leakage and unintended contamination of the facility and the environment.

Adequate and Early Leak Detection

a. The SCS is used only in post shutdown periods. Any leakage is drained to the floor and is collected in the local sump, which is equipped with a liquid level switch. If leakage exceeds a predetermined liquid level within the sump, the level switch initiates an alarm in the MCR for operator action to investigate the source of leakage.

Reduction of Cross-Contamination, Decontamination, and Waste Generation

a. The SSCs are designed with life-cycle planning through the use of nuclear industry-proven materials compatible with the chemical, physical, and radiological environment, thus minimizing waste generation.

b. The pumps are equipped with drains directly routed to the radioactive drain system. This design approach minimizes contamination to the facility and the environment.

c. The SCS is isolated from the RCS when the RCS is at high pressure (during normal power operation). The interlocks associated with six valves on the two SCS suction lines are provided to prevent the valves from opening in the event that RCS pressure exceeds SCS operating pressure, thus minimizing cross-contamination between the systems.

Decommissioning Planning

a. The SSCs are designed for extended service life and are fabricated as individual assemblies for easy removal.

b. The SSCs are designed with decontamination capabilities. Design features, such as welding techniques and surface finishes, are included to minimize the need for decontamination and the resultant waste generation.

c. The SCS is designed with minimal embedded piping for contaminated or potentially contaminated fluid, which minimizes the potential for unintended contamination of the environment.

Operations and Documentation

a. The COL applicant is to prepare operational procedures and maintenance programs related to leak detection and contamination control of SCS(COL 5.4(3)). Procedures and maintenance programs are to be completed before fuel is loaded for commissioning.

b. The COL applicant is to maintain complete documentation of the system design, construction, design modifications, field changes, and operations of SCS (COL 5.4(4)). Documentation requirements are included a a COL Information Item.

Site Radiological Environmental Monitoring

a. The SCS is on standby mode during normal power operation and is designed to have low levels of contamination. Through monitoring, in-service inspection, and lessons learned from industry experiences, the integrity of the SCS is maintained, resulting in a very low level of contamination of the facility. Hence, the SCS is not required to be part of the Site Radiological Environmental Monitoring Program.

5.4.8 Reactor Water Cleanup System (Boiling Water Reactors Only)

This section is not applicable to the APR1400.

5.4.9 [Reserved]

5.4.10 Pressurizer

5.4.10.1 Design Bases

The pressurizer is designed to:

a. Maintain RCS operating pressure so that the minimum pressure during operating transients is above the setpoint for the safety injection actuation signal (SIAS) and

low pressure reactor trip and so that the maximum pressure is below the high pressure reactor trip setpoint.

b. Withstand the consequences of the design transients of Table 3.9-1 without failure or malfunction.

c. Provide sufficient water volume in the pressurizer to prevent uncovering the heaters as a result of a reactor trip.

d. Provide sufficient water volume to prevent pressurizer heaters from being uncovered by the outsurge following step load decreases of 10 percent starting within the range of 100 percent to 15 percent of full-rated power or a 5 percent per minute ramp decrease from 100 percent to 15 percent of full-rated power.

e. Provide sufficient steam volume to avoid lifting the pressurizer pilot-operated safety relief valves as a result of a loss of condenser vacuum (LOCV) event (normal control systems are operational).

f. Provide sufficient steam volume to allow acceptance of the insurge resulting from any loss of load transient without liquid or two-phase flow reaching the pressurizer pilot-operated safety relief valve nozzles.

g. Minimize the total reactor coolant mass change and associated charging and letdown flow rates in order to reduce the quantity of wastes generated by load follow operations.

h. Provide sufficient pressurizer heater capacity to heat up the pressurizer, filled with water at the zero power level, at a rate that provides reasonable assurance of a pressurizer temperature (and thus pressure) that will maintain an adequate degree of subcooling of the water in the reactor coolant loop as it is heated by core decay heat and/or pump work from the reactor coolant pumps.

i. Contain a total water volume that does not adversely affect the total mass and energy released to the containment during the maximum hypothetical accident.

j. Provide reasonable assurance that, in addition to being specified as seismic Category I, the pressurizer vessel, including heaters, baffles, and supports is designed so that no damage to the equipment is caused by the frequency ranges of 19–24 cps and 118–143 cps. The lower frequency is produced by vibratory excitations associated with RCP rotating speed. The design basis for the higher frequency consists of a pressure pulse of 0.56 kg/cm^2 (8 psi), which diminishes internally within the vessel.

k. Maintain the pressurizer at normal operating pressure during hot standby conditions by taking into account the energy balance of maximum heat loss from the pressurzier and the pressurizer heater capacity. This capability is provided by redundant trains of heaters powered from off-site power and Class 1E emergency power. The Class 1E emergency power is used if off-site power is not available.

l. Maintain sufficient spray flows to keep the pressure below the reactor trip setpoint during maneuvering and load follow operations and loss of load transients.

m. Provide the adequate pressurizer size and spray capacity so the pressurizer pilot-operated safety relief valves are not actuated by overpressure events initiated by normal operation transients.

5.4.10.2 System Description

5.4.10.2.1 Pressurizer

The pressurizer, as shown in Figure 5.4.10-1, is a vertically mounted, bottom supported, cylindrical pressure vessel. Replaceable direct immersion electric heaters are vertically mounted in the bottom head. The pressurizer is furnished with nozzles for the spray, surge, and pilot-operated safety relief valves, and with pressure, temperature, and level instrumentation. A manway is provided in the top head for access for inspection of the pressurizer internals. The pressurizer surge line is connected to one of the reactor coolant hot legs and the spray lines are connected to two of the cold legs at the reactor coolant pump discharge. Heaters are supported inside the pressurizer to preclude damage from vibration and seismic loadings. Principal design parameters are listed in Table 5.4.10-1.

The pressurizer heaters are single-unit, direct immersion heaters that protrude vertically into the pressurizer through sleeves welded in the lower head. Each heater is internally restrained from high amplitude vibrations and can be individually removed for maintenance during plant shutdown.

The pressurizer and surge line are located entirely above the reactor coolant loops. The surge line is continuously rising from the hot leg nozzle to the pressurizer, thus providing reasonable assurance that the line contains no water traps. The pressurizer surge line is sized and arranged to minimize the flow resistance.

Each pressurizer spray line includes an isolation valve (RC-442, RC-443), which can be remotely shut from the MCR to prevent RCS depressurization in the event the pressurizer spray valve in the line fails to close.

The maximum allowable pressure drop through the pressurizer spray line piping only is 1.62 kg/cm^{2}D (23 psid) at a total flow rate of 28.4 L/s (450 gpm) and at a water temperature of 290.6 °C (555 °F).

The pressurizer is designed and fabricated in accordance with the ASME Code listed in Table 5.2-1. The interior surface is clad with weld deposited stainless steel or NiCrFe alloy.

5.4.10.2.2 Instrumentation

The pressurizer is equipped with nine nozzles for the pressurizer level and pressure measurements. Seven of the nine nozzles are installed on the top head of the pressurizer, and the other two are installed in the bottom head. In addition, two temperature nozzles are installed in the lower shell portion of the pressurizer to monitor water temperature.

The bottom head level nozzles are provided with the internal nozzle extensions to minimize crud buildup in the nozzles. The temperature nozzles are compatible with the thermowells.

The instrument nozzles that require socket-welded end preparations meet the requirements of ASME B16.11.

See Section 7.7 for the instrumentation and control systems that are associated with the pressurizer pressure and water level.

5.4.10.2.3 Operation

The total volume of the pressurizer is established by consideration of the factors given in Subsection 5.4.10.1. To account for these factors and to provide adequate margin at all power levels, the water level in the pressurizer is programmed as a function of average coolant temperature as shown in Figure 5.4.10-2, in conjunction with Figure 5.4.10-3. High or low water level error signals result in the control actions shown in Figure 5.4.10-4. The pressurizer surge line is sized to accommodate the flow rates associated with the RCS expansion and contraction due to the transients specified in Subsection 3.9.1.

The pressurizer maintains reactor coolant system operating pressure and, in conjunction with the chemical and volume control system (CVCS), Subsection 9.3.4, compensates for changes in reactor coolant volume during load changes, heatup, and cooldown. During full-power operation, the pressurizer is about half full of saturated steam.

RCS pressure may be controlled automatically or manually by maintaining the temperature of the pressurizer fluid at the saturation temperature corresponding to the desired system pressure. A small continuous spray flow is maintained to the pressurizer to avoid stratification of pressurizer boron concentration and to maintain the temperature in the surge and spray lines, thereby reducing thermal shock as the spray control valves open. An auxiliary spray line is provided from the charging pumps to permit pressurizer spray during plant heatup, or to allow cooling if the reactor coolant pumps are shut down.

During load changes, the pressurizer limits pressure variations caused by expansion or contraction of the reactor coolant. The average reactor coolant temperature is programmed to vary as a function of load as shown in Figure 5.4.10-3. A reduction in load is followed by a decrease in the average reactor coolant temperature to the programmed value for the lower power level. The resulting contraction of the coolant lowers the pressurizer water level, causing the reactor system pressure to decrease. This pressure reduction is partially compensated by flashing of pressurizer water into steam. In the event of a pressure level decrease, the two CVCS letdown orifice isolation valves close, and the throttling openings of the CVCS charging control valve are automatically controlled to add coolant to the RCS and restore pressurizer level.

When the main steam demand is increased, the average reactor coolant temperature is raised in accordance with the coolant temperature program. The expanding coolant from the reactor coolant piping hot leg enters the bottom of the pressurizer through the surge line, compressing the steam and raising RCS pressure. The increase in pressure is moderated by the condensation of steam during compression and by the decrease in bulk temperature in the liquid phase. If the pressure increase is large enough, the pressurizer spray valves open and spray coolant from the reactor coolant pump discharges (cold leg) into the pressurizer steam space. The relatively cold spray water condenses some of the steam in the steam space, limiting the system pressure increase. The programmed pressurizer water level is a RCS average temperature dependent function. A high level error signal, produced by an in-surge, causes the charging control valve modulated to a closing direction, thus restoring the pressurizer to the programmed level. Small pressure and primary coolant volume variations are accommodated by the steam volume that absorbs flow into the pressurizer, and by the water volume that allows flow out of the pressurizer.

A number of the heaters are connected to proportional integral controllers, which adjust the heat input to account for steady-state losses and the continuous spray flow, and to maintain the desired steam pressure in the pressurizer. The remaining heaters are connected to on-off controllers. These heaters are normally de-energized but are automatically turned on by a low pressurizer pressure signal or a high level error signal. This latter feature is provided because load increases result in an in-surge of relatively cold coolant into the pressurizer, thereby decreasing the bulk water temperature. The CVCS acts to restore level, resulting in a transient pressure below normal operating pressure. To minimize the extent of this transient, the on-off controlled backup heaters are energized, contributing more heat to the water. A low-low pressurizer water level signal de-energizes all heaters to prevent heater damage before they are uncovered. The pressure control program is shown in Figure 5.4.10-5.

5.4.10.3 Design Evaluation

It is demonstrated by analysis in accordance with requirements for ASME Section III, Class 1 vessels that the pressurizer is adequate for all normal operating and transient conditions expected during the life of the facility. Following completion of fabrication, the pressurizer is subjected to the required ASME Section III hydrostatic test and post-hydrostatic test nondestructive testing.

During hot functional testing, the transient performance of the pressurizer is checked by determining its normal heat losses and maximum depressurization rate. This information is used in setting the pressure controllers. Reasonable assurance of the structural integrity of the pressurizer is further obtained from the inservice inspections performed in accordance with ASME Section XI and described in Section 5.2.

Overpressure protection of the RCS is provided by four pilot-operated safety-relief valves. See Subsection 5.4.14.

5.4.10.4 Test and Inspection

Prior to and during fabrication of the pressurizer, nondestructive testing is performed in accordance with the requirements of ASME Section III. Table 5.4.10-2 summarizes the pressurizer inspection program, which also includes tests not required by the Code. See Subsection 5.2.4 for inservice inspections of the pressurizer.

5.4.11 Pressurizer Relief Tank

The in-containment refueling water storage tank is used as the pressurizer relief tank. The design and description of this tank are given in Subsection 5.4.12 and Section 6.8.

5.4.12 Reactor Coolant System High Point Vents

The reactor coolant gas vent system (RCGVS) is used to discharge noncondensable gases and steam from the high point of the reactor coolant system (RCS) for venting or pressure control during post-accident conditions.

5.4.12.1 Design Bases

The RCGVS is designed to provide a safety-grade means of remotely venting noncondensable gases from the reactor vessel closure head and the pressurizer steam space during post-accident conditions. The RCGVS is also designed to provide a safety-grade means of remotely and selectively removing steam from the pressurizer steam space and/or the reactor vessel for RCS pressure control purposes in the event that pressurizer main spray and auxiliary spray are unavailable during non-LOCA design basis events. In

addition, the RCGVS is used for the noncondensable gases vent path during plant startup to fill the RCS.

The reactor vessel closure head vent portion of the RCGVS is designed to provide sufficient venting capacity to vent a steam bubble formed in the reactor vessel closure head during a natural circulation cooldown analysis, assuming a single failure. Reactor vessel closure head vent flow isolation is possible, assuming a single failure.

The pressurizer vent portion of the RCGVS is designed to provide sufficient venting capacity to reduce pressurizer pressure consistent with plant cooldown requirements, assuming a single failure. Pressurizer vent flow isolation is possible, assuming a single failure.

The RCGVS equipment and piping from the reactor vessel closure head vent up to and including the second vent valve, and from the pressurizer up to and including second vent valve are designed as seismic Category I, Class 1E and designed, fabricated, erected, tested and maintained to high quality standards in accordance with ASME Section III, Class 1 requirements.

Each active RCGV valve is designed to be powered from the normal or the emergency power source. Power connections are through two independent power divisions so that in the event of an accident, in conjunction with a loss of normal power and a single failure of one emergency DC power division, a vent path from the pressurizer and the reactor vessel head can be established. The RCGV valves are remotely operated from the main control room and remote shutdown room.

Vent areas provide for mixing of the containment air. Swing panels at the top of the IRWST allow circulation of air for adequate mixing of any combustible gases with the containment atmosphere.

Venting does not adversely affect the performance of safety-related SSCs and does not aggravate the challenge to containment or the course of an accident.

The RCGVS is designed in accordance with the quality assurance acceptance criteria provided in Chapter 17.

The RCGVS satisfies applicable requirements and industry standards, including ASME Code classifications; 10 CFR 50.34(f)(2)(vi); 10 CFR 50.44; 10 CFR 50.46; 10 CFR 50.46a; 10 CFR 50.49; 10 CFR 50.55a; GDC 1, 14, 17, 19, 30, 34, and 36; and safety classifications and environmental qualifications.

5.4.12.2 System Design

RCGVS provides a means of venting noncondensable gases and steam from the pressurizer and the reactor vessel closure head to the in-containment refueling water storage tank (IRWST). The functions are as follows:

a. RCGVS provides a safety-grade means of venting noncondensable gases and steam from the pressurizer during post-accident conditions for non-LOCA design basis events.

b. Safety-grade means to depressurize the RCS in the event that pressurizer main spray and auxiliary spray systems are unavailable.

RCGV connections to the RCS are located at the reactor vessel closure head vent pipe and at the steam sample/vent line off the pressurizer upper head. The RCGVS flow diagram is shown in Figure 5.4.12-1.

5.4.12.2.1 Reactor Vessel Closure Head Vent

Piping from the reactor vessel is routed directly to the RCGV piping. This piping allows the operator to direct the RCGV discharge, through parallel valve divisions, to the IRWST, which is designed as seismic Category I.

The solenoid-operated valves of the parallel valve divisions are controlled from the MCR or RSR. Open and closed indications of the valves are provided and monitored from the MCR or RSR. Each valve is powered by the independent Class 1E power supply, and the valves are supplied with power by alternate alternating current power during a station blackout. The valves are qualified using the ANSI/IEEE Std 344 (Reference 21) as endorsed by NRC RG.1.100 (Reference 22).

The following information is available to the operator for initiating and terminating the reactor vessel closure head venting operation during post-accident conditions:

a. For initiating system operation: reactor vessel water level

b. For terminating system operation: reactor vessel water level

If voids form in the reactor vessel closure head, the operator may open the RCGV valves on the top of the reactor vessel (RG-415, RG-414, RG-417, and RG-416) to vent steam from the reactor vessel closure head, allowing the reactor vessel to be refilled. The reactor vessel closure head vent has a capacity of 4,797 kg/hr (10,576 lb/hr) at 175.8 kg/cm^{2}A (2,500 psia).

The noncondensable gases accumulating in the U-tubes of the steam generators are transferred to the reactor vessel closure head by using a procedure in which one or more RCPs per loop operate for short periods to force noncondensable gases out of the U-tubes.

5.4.12.2.2 Pressurizer Vent

The RCGV piping allows the operator to direct the RCGV discharge, through parallel valve divisions, to the IRWST, which is designed as seismic Category I.

The solenoid-operated valves of the parallel valve divisions are controlled from the MCR or RSR. Open and closed indications of the valves are provided and monitored from the MCR or RSR. Each valve is powered by the independent Class 1E power supply, and the valves are supplied power by alternate alternating current power during a station blackout. The valves are qualified using the ANSI/IEEE Std 344 as endorsed by NRC RG.1.100.

The following information is available to the operator for initiating and terminating the pressurizer venting operation during post-accident conditions:

a. For initiating system operation: pressurizer pressure and cold leg temperatures

b. For terminating system operation: pressurizer pressure and cold leg temperatures

The operator may use the RCGV function to cool down and depressurize the plant in the event the pressurizer main spray and auxiliary spray systems are not operable. The operator manually opens the RCGV valves (RG-410, RG-411, RG-412, and RG-413) on the top of the pressurizer, releasing steam to the IRWST through valve RG-0419/RG-0420. This pressurizer vent has the capacity of 14,023 kg/hr (30,915 lb/hr) at the pressurizer condition of 175.8 kg/cm^{2}A (2,500 psia). The RCGV flow and the depressurization rate are controlled by valves RG-410, RG-411, RG-412, and RG-413 in the vent lines from the top of the pressurizer, and by opening and closing the RCGV valves (RG-414, RG-415, RG-416, and RG-417) from the top of the reactor vessel closure head.

The noncondensable gases accumulating in the U-tubes of the steam generators are transferred to the pressurizer by using a procedure in which one or more RCPs per loop operate for short periods to force noncondensable gases out of the U-tubes.

5.4.12.2.3 Design Features for Minimization of Contamination

The RCGVS is designed with specific features to meet the requirements of 10 CFR 20.1406 and NRC RG 4.21. The basic principles of NRC RG 4.21, and the methods of control suggested in the regulations, are specifically delineated into four design objectives and two operational objectives as described in Subsection 12.3.1.10.

The reactor coolant gas vent system consists of piping and valves that are located inside the containment. The RCGVS vents noncondensable gases from the pressurizer and the reactor vessel upper head and depressurizes the reactor coolant system in the event that the pressurizer main spray or auxiliary spray systems are unavailable during plant cool down. The piping directs the vented gases to the IRWST or the reactor drain tank (RDT) and is sloped to facilitate the drainage of condensation. As the system is located entirely within containment, any leakage from the system components will be collected in the RDT or IRWST inside containment. Hence, the reactor coolant gas vent system has low potential to contaminate other areas of the plant or the environment. This design is in compliance with the requirements of NRC RG 4.21.

5.4.12.3 Performance Evaluation

Redundant flow paths are provided in the vent paths from the reactor vessel closure head and pressurizer respectively, to provide reasonable assurance of flow under single failure conditions. A redundant flow path contains two valves in series, in each flow path, to preclude spurious flow path initiation upon single failures and inadvertent open flow path. To achieve this, the two valves are powered by the different train of Class 1E power source.

The evaluation of the reactor coolant gas vent system operation is as follows:

a. The operation is needed when venting the noncondensable in the upper reactor vessel is necessary.

b. The size of a noncondensable bubble is estimated from reading the reactor vessel water level indication.

The operations are initiated and terminated manually.

A break of the vent line on the reactor vessel closure head (RVCH) is categorized as a small break LOCA of not greater than NPS that is 2.54 cm (1 in) in diameter. A break phenomenon (or behavior) of the RVCH vent line is similar to the breaks that are analyzed in Subsection 15.6.5. Hence, the results presented in Subsection 15.6.5 conservatively envelop the RVCH vent line break case.

5.4.12.4 Inspection and Testing Requirements

Subsection 3.9.6 describes inservice testing and inspection of valves. Subsection 5.2.4 describes inservice inspection and testing of ASME Code, Class 1 components that are part of the reactor coolant pressure boundary.

5.4.12.5 Instrumentation Requirements

Temperature instrumentation is provided downstream of the RCGV valves (RG-418, RG-419, and RG-420) to detect RCS leakage during normal operation when the valves are

closed. These instruments are not required for post-accident operation. Temperature readouts are provided in the MCR and RSR.

A pressure instrument is provided downstream of the dual RCGV valves but before the isolation valves to the IRWST to detect pressure buildup in this region. Pressure readout is provided at the MCR and RSR.

All RCGV valves are operated in the MCR and the RSR.

5.4.13 Main Steamline Flow Restrictor

5.4.13.1 Design Basis

The steam nozzle of the steam generator is provided with a flow restrictor designed to limit steam flow in the unlikely event of a break in the main steamline. The flow rate is decreased by the small flow area and is limited to sonic velocity. Several protective advantages are thereby provided: rapid rise in containment pressure is prevented, the rate of heat removal from the reactor coolant is kept within acceptable limits, thrust forces on the main steamline piping are reduced, and stresses on internal steam generator components, particularly the tubesheet and tubes, are limited. The restrictor is also designed to minimize the unrecovered pressure loss across the restrictor during normal operation.

5.4.13.2 Design Description

The steam generator steam nozzles are one-piece forgings with an integral venturi-type flow restrictor. The flow restrictor with throat diameter of 38.95 cm (15.33 in) is installed at 75.66 cm (29.79 in) inner diameter steam generator outlet nozzle.

5.4.13.3 Design Evaluation

The flow restrictor design has been sufficiently analyzed to provide reasonable assurance of its structural adequacy. The maximum pressure drop through the restrictor at the full power flow rate of 2.04×10^6 kg/hr (4.49×10^6 lb/hr) is approximately 0.42 kg/cm^{2}D (6 psid) in the nozzle divergent section, and 0.56 kg/cm^{2}D (8 psid) from the steam generator

steam dome to the steam nozzle outlet. Construction materials and manufacturing of the flow restrictor are in accordance with ASME Section III, Class 1.

5.4.13.4 Tests and Inspections

Since the restrictor is not a part of the steam system boundary, no tests and inspections beyond those during fabrication are anticipated.

5.4.14 Safety and Relief Valves

5.4.14.1 Design Basis

The POSRVs on the pressurizer are designed to protect the primary system, as required by ASME Code Section III.

The design basis for establishing the relieving capacity of the pressurizer POSRVs is presented in Subsection 5.2.2. For the postulated transients presented in Chapter 15, the results indicate that relieving capacity of the POSRVs is sufficient to provide overpressure protection.

Safety valves on the steam side of each SG are designed to protect the steam system, as required by ASME Code Section III. They are conservatively sized to pass a steady-flow equivalent to the maximum expected power level at the design pressure of the steam system.

5.4.14.2 Description

The RCS has four pressurizer POSRVs to provide overpressure protection. A typical POSRV is illustrated in Figure 5.4.14-1. The design parameters are given in Table 5.4.14-1. The valves are connected to the top of the pressurizer and meet ASME Code Section III requirements. Each valve has a body that comprises a nozzle, spindle, and disc. The pressurizer POSRVs pass sufficient pressurizer steam to limit the RCS pressure to 110 percent of design pressure (193.3 kg/cm^{2}A (2,750 psia)) following a loss of load with a delayed reactor trip, which is assumed to be initiated by the secondly generated safety grade signal from the RPS. A delayed reactor trip is assumed on a high-pressurizer

pressure signal. To determine maximum steam flow through the pressurizer POSRVs, the MSSVs are assumed to be operational.

Overpressure protection for the shell side of the SGs and the main steam lines up to the inlet of the turbine stop valve is provided by the MSSVs. These valves are each sized to pass a steam flow of 430,913 kg/hr (950,000 lb/hr) at 92.83 kg/cm^{2}A (1,320 psia). This limits SG pressure to less than 110 percent of SG design pressure during worst-case transients. The MSSVs consist of 20 valves with staggered set pressures. The valves are spring-loaded safety valves fabricated in accordance with ASME Code Section III. Parameters for the MSSVs are given in Table 5.4.14-2.

The manual actuation of pressurizer POSRVs can be used for rapid depressurization for feed-and-bleed operation in an total loss of feedwater event.

5.4.14.3 Evaluation

Overpressure protection is discussed in Subsection 5.2.2.

5.4.14.4 Tests and Inspections

The valves are inspected during fabrication in accordance with ASME Code Section III requirements.

The inlet and outlet portions of the POSRVs are hydrostatically tested with water at the appropriate pressures as required by the applicable section of the ASME Code Section III. Set pressure and seat leakage tests can be performed with steam. Final seat leakage tests are performed before shipment using either hot air or hot nitrogen.

5.4.15 Component Supports

5.4.15.1 Design Basis

The criteria applied in the design of the RCS supports are that the specific function of the supported equipment be achieved during the conditions of normal, earthquake, POSRV actuation, IRWST discharge, and branch line pipe break (BLPB) conditions. BLPB

includes feedwater line breaks and all LOCA conditions resulting from breaks not eliminated by leak-before-break analysis in piping to branch nozzles of the RCS. Specifically, *[the supports are designed to support the RCS components and to restrain the components in accordance with the stress and deflection limits of ASME Section III under the combined SSE and BLPB loadings.]**

5.4.15.2 Description

Figure 5.4.15-1 illustrates the RCS support points. A description of the supports for each supported component is as follows:

a. Reactor vessel supports

The RV is supported by four vertical columns located under the vessel inlet nozzles. These columns are designed to be flexible to the horizontal direction to allow horizontal thermal expansion during heatup and cooldown. They also support the RV in the vertical direction.

Horizontal keyways along the upper portion of the column guide the RV during thermal expansion and contraction of the RCS and maintain the vessel centerline.

Four horizontal keys welded to the vessel bottom head and keyways of the column base plates allow free thermal expansion and contraction of the RV. The column base plate acts as a keyway to restrain the bottom of the RV for dynamic load conditions.

The supports are designed to accommodate normal, seismic, IRWST discharge, and BLPB loads. In addition to the design basis loads, irradiation effects are also considered in the fracture mechanics analysis of the columns.

Reactor vessel supports are shown in Figure 5.4.15-2.

b. Steam generator supports

The steam generator supports are shown in Figure 5.4.15-3. The steam generator is supported by a conical skirt welded to the steam generator lower head. The skirt provides a bolting surface for a heavy steel sliding base. Preloaded studs transfer loads from the skirt to the sliding base. Four low friction spherical head bearings under the plate are the sliding interface, which allows horizontal motion parallel to the hot leg due to thermal expansion. Machined cutouts in the sliding base act as keyways for embedded keys that support the generator horizontally during earthquakes, IRWST discharge, and a postulated pipe break. The keys are designed to resist dynamic event loads in a direction perpendicular to the hot leg piping. In the keyways, lower expansion plates (low friction bearings) are used to minimize resistance to thermal motion. The clearance between the lower expansion plate (low friction bearings) and the keys are shimmed and verified during hot functional testing.

Horizontal support at the top of the steam generator is provided by two keys and two hydraulic snubber assemblies. The keys and assemblies act as horizontal supports for the steam generator during earthquakes, IRWST discharge, and a postulated pipe break while allowing motion parallel to the hot leg due to thermal expansion. Figures 5.4.15-3 shows the upper steam generator supports. Upper expansion plates (low friction bearings) are bolted to the sides of the keyway. The clearance between the key and the upper horizontal supporting structures are shimmed and verified during hot functional testing.

Each snubber assembly consists of a lug welded to the steam generator, a lever, two links, a snubber, one clevis pinned to the lever, and one clevis pinned to the snubber as shown in Figure 5.4.15-3. Each clevis is drilled to accept anchor bolts. Preloaded anchor bolts and the clevises are the mechanism by which loads are transmitted to the concrete structure.

c. RCP supports

The supports control movement of the reactor coolant pump in the horizontal and vertical planes during earthquakes, IRWST discharge, and postulated pipe breaks, but accommodate motion due to thermal expansion.

The reactor coolant pump supports are shown in Figure 5.4.15-4. The reactor coolant pump and motor assembly is supported by four vertical columns pinned to the pump mounting skirt. It is supported for seismic, IRWST discharge, and postulated pipe break loads by two horizontal columns pinned to the top of the motor mount, two horizontal columns pinned to the pump support skirt, and a horizontal snubber system attached to the top of the motor mount.

Each column, horizontal and vertical, and the snubber assembly end in a clevis drilled to accept anchor bolts. The loads are transmitted to the concrete structure through the clevises and preloaded anchor bolts.

d. Pressurizer supports

The pressurizer is supported by a cylindrical skirt welded to the bottom head of the pressurizer. The skirt ends in a flange that is drilled to accept anchor bolts. Support loads are transmitted to the foundation through the skirt flange and preloaded anchor bolts. Although most thermal growth is in the vertical direction, the pressurizer skirt design accommodates radial growth without bolt slippage.

Four keys welded to the upper portion of the pressurizer shell give additional support to the pressurizer during an earthquake, POSRV actuation, IRWST discharge, and a postulated pipe break. The clearance between the key and the supporting structure is shimmed and verified during hot functional testing.

5.4.15.3 Evaluation

*[Reasonable assurance of the structural integrity of the RCS support components is provided by quality assurance inspections in accordance with ASME Section III during fabrication of the supports.]** The non-integral supports are procured by individual equipment specifications that impose appropriate quality assurance requirements commensurate with the functions of the component.

During pre-operational testing of the RCS, the support displacements are measured to check the consistency with the calculated displacements and/or clearances. Subsequent

inspections of supports that support RCS components are conducted in accordance with the ASME Section XI.

The COL applicant is to verify that the as-built RV support material properties and 60-year neutron fluence (COL 5.4(5)) are consistent with the following:

a. Maximum phosphorous, 0.015 percent per heat, and 0.018 percent per product analysis

b. Maximum copper, 0.15 percent per heat and per product analysis

c. Other chemical compositions consistent with SA508 chemistry

d. 60-year neutron fluence of 2.0×10^{18} neutrons per square centimeter (E > 1.0 MeV)

If the requirements above are not met, revised fracture mechanics analysis is performed.

5.4.16 Combined License Information

COL 5.4(1) The COL applicant is to prepare operational procedures and maintenance programs related to leak detection and contamination control of RCS.

COL 5.4(2) The COL applicant is to maintain complete documentation of system design, construction, design modifications, field changes, and operations of RCS.

COL 5.4(3) The COL applicant is to prepare operational procedures and maintenance programs related to leak detection and contamination control of SCS.

COL 5.4(4) The COL applicant is to maintain complete documentation of system design, construction, design modifications, field changes, and operations of SCS.

COL 5.4(5) The COL applicant is to verify the as-built RV support material properties and 60-year neutron fluence.

5.4.17 References

1. ASME Boiler and Pressure Vessel Code, Section III, "Rules for Construction of Nuclear Power Plant Components," 2007 Edition with 2008 Addenda.

2. 10 CFR 50, Appendix A, "General Design Criteria for Nuclear Power Plants." NRC Regulation Title 10.

3. NRC RG 1.14, "Reactor Coolant Pump Flywheel Integrity," Revision 1, August 1975.

4. ASME Boiler and Pressure Vessel Code, Section XI, "Rules for Inservice Inspection of Nuclear Power Plant Components," 2007 Edition with 2008 Addenda.

5. NEMA MG-1, "Motors and Generators," 2009 (with 2010 Revision 1).

6. NRC RG 1.121, "Bases for Plugging Degraded PWR Steam Generator Tubes," Revision 0, August 1976.

7. APR1400-R-A-T(NR)-11008-P, "Technical Report for Analysis of Beyond Design Basis Events," December 2012.

8. ASME Boiler and Pressure Vessel Code, Section III, Appendix N, "Dynamic Analysis Methods," 2007 Edition with 2008 Addenda.

9. NRC Bulletin 79-13, "Cracking in Feedwater System Piping," August 1979.

10. NEI 97-06, "Steam Generator Program Guidelines," Revision 3, January 2011.

11. EPRI Report 1013706, "Pressurized Water Reactor Steam Generator Examination Guidelines," Revision 7, October 2007.

12. EPRI Report 1022832, "PWR Primary-to-Secondary Leak Guidelines," Revision 4, September 2011.

13. EPRI Report 1019038, "Steam Generator Integrity Assessment Guidelines," Revision 3, November 2009.

14 EPRI Report 1016555, "Pressurized Water Reactor Secondary Water Chemistry Guidelines," Revision 7, February 2009.

15. EPRI Report 1014986, “Pressurized Water Reactor Primary Water Chemistry Guidelines,” Revision 6, December 2007.

16. 10 CFR 20.1406, “Minimization of Contamination,” NRC Regulations Title 10.

17. NRC RG 4.21, “Minimization of Contamination and Radioactive Waste Generation-Life Cycle Planning,” Revision 0, June 2008.

18. NRC SRP, Branch Technical Position 5-4, “Design Requirements of the Residual Heat Removal System,” Revision 4, March 2007.

19. NRC Bulletin 88-04, “Potential Safety-Related Pump Loss,” May, 1988

20. GL 88-17, “Loss of Decay Heat Removal,” October 1988.

21. IEEE Std. 344-2004 (Reaffirmed 2009), “Recommended Practice for Seismic Qualification of Class 1E Equipment for Nuclear Power Generating Stations,” Institute of Electrical and Electronics Engineers (IEEE), June 2005.

22. NRC RG 1.100, “Seismic Qualification of Electric and Mechanical Equipment for Nuclear Power Plants,” Rev. 3, U.S. Nuclear Regulatory Commission, September 2009.

Table 5.4.1-1

Reactor Coolant Pump Parameters

Parameter	Value
Number of units	4
Type	Vertical, single-stage centrifugal
Rated total dynamic head,(1) m (ft)	109.7 (360)
Rated flow, L/min(2) (gpm)	460,256 (121,600)
Design pressure, kg/cm^{2}A (psia)	175.8 (2,500)
Design temperature, °C (°F)	343.3 (650)
Normal operating pressure, kg/cm^{2}A (psia)	158.2 (2,250)
Normal operating temperature,(1) °C (°F)	290.6 (555)
NPSH available (at rated flow), m (ft)	182.9 (600)
Suction temperature,(1) °C (°F)	290.6 (555)
Water volume, each, m^3 (ft^3)	3.26 (115)
Weight (including motor), dry, kg (lb)	144,515 (318,600)
Rotating inertia, pump, and motor: Assembly, minimum, kg-m^2 (lbs-ft^2)	6,717 (159,400)
Shaft seals	Mechanical face seals
Pump speed,(1) rpm	1,190
Motor synchronous speed, rpm	1,200
Motor type	AC induction
Horsepower, hot,(1) kW (hp)	7,457 (10,000)
cold, kW (hp)	10,067 (13,500)
Rated brake horsepower, kW (hp)	7,457 (10,000)
Voltage, V	13,200
Phase	3
Frequency, Hz	60
Insulation class	F
Starting current, at 100 % voltage, amps	3,426

(1) Parameters are related to four-pump, full-power operating conditions.

(2) RCP-rated flow exceeds RCS design minimum flow in Sections 4.4 and 5.1 to provide reasonable assurance that the minimum flow is achieved.

Table 5.4.2-1 (1 of 2)

Steam Generator Design Parameters

Parameter[1]	Value
Number of units	2
Heat transfer rate per SG, kcal/hr (Btu/hr)	1.721×10^9 (6.830×10^9)
Number of tubes per SG	13,102
Average active tube length per SG, m (ft)	19.391 (63.62)
Heat transfer area per SG (approximate), m^2 (ft^2)	15,205 (163,670)
Primary Side	
Design pressure/temperature (kg/cm^2A/°C) (psia/°F)	175.76/343.33 (2,500/650)
Coolant inlet temperature, °C (°F)	323.88 (615)
Coolant outlet temperature, °C (°F)	290.55 (555)
Coolant flow rate, each, kg/hr (lb/hr)	37.78×10^6 (83.3×10^6)
Coolant volume at 68 °F each, m^3 (ft^3)	86.84 (3,066.99)
Tube size, OD, mm (in)	19.05 (0.75)
Tube thickness, nominal, mm (in)	1.0668 (0.042)
Primary inlet nozzle, number/inside diameter (ID), mm (in)	1/1,066.8 (42)
Primary outlet nozzle, number/ID, mm (in)	2/762 (30)
Secondary Side	
Design pressure/temperature, kg/cm^2A/°C (psia/°F)	84.36/298.88 (1,200/570)
Steam pressure, kg/cm^2A (psia)	70.30 (1,000)[2]
Steam flow rate (at 0.25 % moisture) per SG, kg/hr (lb/hr)	4.070×10^6 (8.975×10^6)
Feedwater temperature at full power, °C (°F)	232.22 (450)
Moisture carryover, weight maximum, %	0.25
Steam nozzle, number/ID, mm (in)	2/711.2 (28)
Feedwater nozzles, number/size/schedule (economizer)	2/14/120
Feedwater nozzles, number/size/schedule (downcomer)	1/6/(Special)

Table 5.4.2-1 (2 of 2)

Parameter(1)	Value
Overall heat transfer coefficient: Evaporator, kcal/hr-m^2 °C (Btu/hr-ft^2 °F) Economizer, kcal/hr-m^2 °C (Btu/hr-ft^2 °F)	 6,483.864 (1,328) 2,875.750 (589)
Inventory per SG at normal water level and full load (approximate), lbm	217,536
Boil dry time from normal water level of full power (approximate), minimum	23.02
Boil dry time from nominal low SG level of reactor trip (approximate), minimum	22.58

(1) Includes operation with continuous SG blowdown flow of 0.2 % of the steam flow rate

(2) Measured at the SG steam dome area

Table 5.4.7-1 (1 of 3)

Shutdown Cooling System Design Parameters

Parameter	Value
System Design Parameters	
Shutdown cooling system initiation	Approximately 3.5 hours after reactor shutdown
RCS maximum cooldown rate (at initiation of shutdown cooling), °C/hr (°F/hr)	41.7 (75)
Maximum shutdown cooling flow, L/min (gpm)/HX	23,217 (6,134)
Component Design Parameters	
Shutdown cooling heat exchanger:	
Quantity	2
Type	Shell and tube, horizontal U-tube
Service transfer rate, kcal/hr-m^2-°C (Btu/hr-ft^2-°F)	1,872.9 (383.6)
Effective heat transfer area, m^2/HX(ft^2/HX)	776.9 (8,362.5)
Tube side:	
Fluid	Reactor coolant
Design pressure, kg/cm^2 (psig)	63.2 (900)
Design temperature, °C (°F)	204.4 (400)
Material	Austenitic stainless steel
Code	ASME Section III, NC(1)
Fouling resistance, m^2-K/W (hr-ft^2-°F/Btu)	0.000088(0.0005)
Shell side:	
Fluid	Component cooling water
Design pressure, kg/cm^2 (psig)	14.06 (200)
Design temperature, °C (°F)	93.3 (200)
Material	Carbon steel
Code	ASME Section III, ND(2)
Fouling resistance, m^2-K/W (hr-ft^2-°F/Btu)	0.000088(0.0005)

Table 5.4.7-1 (2 of 3)

Parameter	Value
Component Design Parameters (cont.)	
At 96 hours after shutdown Tube side: Flow, kg/hr (lb/hr) Inlet temperature, °C (°F) Outlet temperature, °C (°F)	 1.08×10^6 (2.38×10^6) 48.9 (120) 40.2 (104.4)
Shell side: Flow, million kg/hr (lb/hr) Inlet temperature, °C (°F) Outlet temperature, °C (°F) Heat transfer rate, W (Btu/hr)	 2.49×10^6 (5.48×10^6) 35 (95) 38.8 (101.8) 11.0×10^6 (37.4×10^6)
Shutdown cooling pump: Quantity Type Safety classification Code Design pressure, kg/cm^2 (psig) Design temperature, °C (°F) Design flow rate, L/min (gpm) Design head, m (ft) Materials Seals Brake power, kW (HP) NPSH Available NPSH Required	 2 Single stage, vertical, centrifugal 2 ASME Section III, NC 63.2 (900) 204.4 (400) 20,536 (5,425) (3) 140.2 (460) Stainless steel type 304, 316 Mechanical 746 (1,000) 5.79 m at 20,536 L/min (19 ft at 5,425 gpm) (3) 5.49 m at 20,536 L/min (18 ft at 5,425 gpm) (3)
Shutdown cooling miniflow heat exchanger: Quantity Type Service transfer rate, kcal/hr-m^2-°C (Btu/hr-ft^2-°F) Effective heat transfer area, m^2/HX (ft^2/HX)	 2 Shell and tube, horizontal U-tube 1831.4 (375.1) 14.0 (150.2)

Table 5.4.7-1 (3 of 3)

Parameter	Value
Component Design Parameters (cont.)	
Tube side:	
Fluid	Reactor coolant
Design pressure, kg/cm^2 (psig)	63.3 (900)
Design temperature, °C (°F)	204.4 (400)
Material	Austenitic stainless steel
Code	ASME Section III, NC
Shell side:	
Fluid	Component cooling water
Design pressure, kg/cm^2 (psig)	14.1 (200)
Design temperature, °C (°F)	149 (300)
Material	Carbon steel
Code	ASME Section III, ND

(1) ASME Boiler and Pressure Vessel Code, Section III, "Rules for Construction of Nuclear Power Plant Components," Division 1, Subsection NC: "Class 2 Components," ASME, July 2010.

(2) ASME Boiler and Pressure Vessel Code, Section III, "Rules for Construction of Nuclear Power Plant Components," Division 1, Subsection ND: "Class 3 Components," ASME, July 2010.

(3) Including the minimum bypass flow

Table 5.4.7-2 (1 of 7)

Shutdown Cooling System Failure Modes and Effects Analysis

No.	Name	Failure Mode	Cause	Symptoms and Local Effects Including Dependent Failures	Method of Detection	Inherent Compensating Provision	Remarks and Other Effects
1	Shutdown Cooling Pump Suction Line Isolation Valve	a. Fails Open	Corrosion, mechanical binding, operator error	No effect on SCS operation	Low flow indication F-302, F-305; periodic testing	None required	
		b. Fails Closed	Same as 1-a.	Effective loss of one shutdown cooling train cooling	Periodic testing	Parallel redundant shutdown cooling path	Valve is normally locked closed.
2	Shutdown Cooling Pump 1, 2	Fails to start	Mechanical failure, electrical failure	Effective loss of one SCS train	Low flow indication F-302, F-305; periodic testing	Parallel redundant shutdown cooling path	
3	Shutdown Cooling Pump Discharge Isolation Valve SI-578, SI-579	a. Fails Open	Corrosion, mechanical binding, operator error	No effect on SCS operation	Low flow indication F-302, F-305; periodic testing	None required	
		b. Fails Closed	Corrosion, mechanical binding, operator error	Effective loss of one shutdown cooling pump	Periodic testing	Parallel redundant shutdown cooling path	Valves are locked open; min. flow line will provide the min. flow required to protect the pump

Table 5.4.7-2 (2 of 7)

No	Name	Failure Mode	Cause	Symptoms and Local Effects Including Dependent Failures	Method of Detection	Inherent Compensating Provision	Remarks and Other Effects
4	Shutdown Cooling Heat Exchanger 1,2	Loss of Cooling	Insufficient CCW, excessive fouling	Diminished ability of subsystem to provide RCS heat removal	High temperature indication from T-300, T-301	Parallel redundant shutdown cooling path	
5	Shutdown Cooling Heat Exchanger Bypass Valve SI-312, SI-313	a. Fails Open	Corrosion, mechanical binding, electrical failure	Delays use of affected SCS train	Valve position indicator; periodic testing	Parallel redundant shutdown cooling path	
		b. Fails Closed	Mechanical failure, electrical failure	Effective loss of one shutdown cooling path	Valve position indicator; periodic testing	Parallel redundant shutdown cooling path	Valves are locked open; min. flow line will provide the min. flow required to protect the pump
6	Shutdown Cooling Heat Exchanger Outlet Flow Control Valve SI-310, SI-311	a. Fails Open	Mechanical failure, electrical failure	Delays use of affected SCS train	Valve position indicator; periodic testing	Parallel redundant shutdown cooling path	
		b. Fails Closed	Mechanical binding, electrical failure	Effective loss of one shutdown cooling path	Valve position indicators; periodic testing	Parallel redundant shutdown cooling path	

Table 5.4.7-2 (3 of 7)

No	Name	Failure Mode	Cause	Symptoms and Local Effects Including Dependent Failures	Method of Detection	Inherent Compensating Provision	Remarks and Other Effects
7	SCS Warmup Line Flow Control SI-690, SI-691	a. Fails Open	Electrical failure, Mechanical binding	Diversion of flow from discharge leg to suction leg of SCS without passing through the reactor core during shutdown cooling operations	Position indication in control room; periodic testing	Redundant shutdown cooling subsystem will not be affected	
		b. Fails Closed	Electrical failure, Mechanical binding	Inability to gradually warm-up the shutdown cooling lines during the SCS alignment procedure	Position indication in control room, periodic testing	None required	Valve is normally locked closed in control room
8	SCS Suction Line Isolation SI-655, SI-656	a. Fails Open	Electrical failure, Mechanical binding	No effect on shutdown cooling	Valve position indication in control room; periodic testing	None required	Interlocks associated with the valves prevent overpressurization. These interlocks prevent the valves in the suction line of the SCS from being opened if RCS pressure exceeds the design pressure of the SCS.
		b. Fails Closed	Electrical failure, Mechanical binding	Inability to align one shutdown cooling subsystem for shutdown cooling	Valve position indication in control room; periodic testing	Redundant shutdown cooling subsystem	

Table 5.4.7-2 (4 of 7)

No.	Name	Failure Mode	Cause	Symptoms and Local Effects Including Dependent Failures	Method of Detection	Inherent Compensating Provision	Remarks and Other Effects
9	SCS Suction Line Isolation Valve SI-651, SI-652, SI-653, SI-654	a. Fails Open	Electrical failure, Mechanical binding	None	Position indication in control room; periodic testing	The redundant series valve provides reasonable assurance that the SCS is protected from normal RCS pressure during power operation	Interlocks associated with the valves prevent overpressurization. These interlocks prevent the valves in the suction line of the SCS from being opened if RCS pressure exceeds a value that would result in exceeding the design pressure of the SCS.
		b. Fails Closed	Electrical failure, Mechanical binding	Effective loss of one SCS train	Position indication in control room; periodic testing	Redundant SCS train	

Table 5.4.7-2 (5 of 7)

No.	Name	Failure Mode	Cause	Symptoms and Local Effects Including Dependent Failures	Method of Detection	Inherent Compensating Provision	Remarks and Other Effects
10	SCS Flow Indication F-302, F-305	False indication	Electrical failure	Inability to control cooldown rate in affected train. Possible isolation of functional train	Comparison with redundant indicator, with all other process instrumentation and valve position indications.	Redundant SCS train	
11	SCS/CSS Pump Suction Cross-Connect Valve SI-340, SI-342	a. Fails Open	Electrical Failure, Mechanical binding	Loss of one SCS train	Low temperature in SCS; periodic testing, valve position indication in the control room	Redundant SCS train	Valve is normally locked closed
		b. Fails Closed	Electrical Failure, Mechanical binding	No effect on SCS operation	Periodic testing, valve position indication in the control room	None required	
12	SDCHX Inlet/Outlet Temperature Recorder T-300, T-301	False indication	Electrical Failure	Inability to control cooldown rate in affected train. Possible isolation of functional SCS train	Comparison with redundant indicators, with all other process instrumentation and valve position indications. Periodic testing	Redundant SCS train	

Table 5.4.7-2 (6 of 7)

No.	Name	Failure Mode	Cause	Symptoms and Local Effects Including Dependent Failures	Method of Detection	Inherent Compensating Provision	Remarks and Other Effects
13	SCS Miniflow HX 1,2	Loss of Cooling	Single failure in CCW system	Possible damage to associated SCP	Periodic testing	Redundant SCS train	
14	SIT Discharge Isolation Valve SI-614, SI-624, SI-634, SI-644	a. Fails Open	Electrical Failure, Mechanical binding	Unable to isolate one SI tank from the RCS	Position indication in control room; periodic testing	None required	During shutdown cooling these valves are closed. However, if a LOCA occurs a SIAS will automatically open these valves. Pressure in SIT's can be reduced if necessary prior to SCS entry
		b. Fails Closed	Electrical Failure, Mechanical binding	No effect during shutdown cooling	Valve position indications in control room; periodic testing	None required	

Table 5.4.7-2 (7 of 7)

No.	Name	Failure Mode	Cause	Symptoms and Local Effects Including Dependent Failures	Method of Detection	Inherent Compensating Provision	Remarks and Other Effects
15	Shutdown Purification Isolation Valve SI-420, SI-421	a. Fails Open	Corrosion, Mechanical binding	None during shutdown cooling	Periodic testing	Redundant isolation valves in series	Valve is normally locked closed
		b. Fails Closed	Corrosion, Mechanical binding	Inability to remove contaminants from one SCS flow path during long-term cooling	The failure to purify would be detected by periodic sampling	Redundant purification connection to other SCS subsystem	
16	SCS Test Return Isolation Valve SI-314, SI-315, SI-688, SI-693	a. Fails Open	Corrosion, Mechanical binding	None	High temperature indication from T-300, T-301; periodic testing	Series isolation valves in IRWST return line	
		b. Fails Closed	Corrosion, Mechanical binding	No effect on SCS operation	Periodic testing	None required	

Table 5.4.10-1

Pressurizer Design Parameter

Property	Parameter
Design pressure, kg/cm^{2}A (psia)	175.8 (2,500)
Design temperature, °C (°F)	371.1 (700)
Normal operating pressure, kg/cm^{2}A (psia)	158.2 (2,250)
Normal operating temperature, °C (°F)	344.8 (652.7)
Internal free volume, m^3 (ft^3)	68.0 (2,400)
Normal (full power) operating water volume, m^3 (ft^3)	33.2 (1,171)
Normal (full power) steam volume, m^3 (ft^3)	35.8 (1,263)
Installed heater capacity, kW	2,400
Heater type	Immersion
Spray flow, minimum design capacity, L/min (gpm)	1,703.4 (450)
Bypass spray flow, continuous, L/min (gpm)	1.9~22.7 (0.5~6)
Nozzles: Surge, in (nominal) Spray, in (nominal) POSRV, in	 12, schedule 160 4, schedule 160 6, Liner ID 7.75, nozzle ID
Instrument: Level, in (nominal) Temperature, in (nominal) Pressure, in (nominal)	 3/4, schedule 160 1, schedule 160 3/4, schedule 160
Heater, OD, mm (in)	31.75 (1-1/4)

Table 5.4.10-2

Pressurizer Tests

Component	Test
Heads	
Plates	UT, MT
Cladding	UT, PT
Shell	
Plates	UT, MT
Cladding	UT, PT
Heaters	
Tubing	UT, PT
Centering of elements	RT
End plug	UT, PT
Nozzle (forgings)	UT, MT
Studs	UT, MT
Welds	
Shell, longitudinal	RT, MT
Shell, circumferential	RT, MT
Cladding	UT, PT
Nozzles	RT, MT
Nozzle safe ends	RT, PT
Instrument connections	PT
Support skirt	MT, RT
Temporary attachment after removal	MT
All welds after hydrostatic test	MT or PT
Heater assembly, end plug weld	PT

UT = Ultrasonic testing

MT = Magnetic particle testing

PT = Dye-penetrant testing

RT = Radiographic testing

Table 5.4.12-1

Reactor Coolant Gas Vent System – Active Valve List

Valve Number	Type	Line Size – Schedule	Power Source 125V DC Bus	Actuator	Safety Class
RG-410	Globe	50 mm (2 in) - 160	A	Solenoid	1
RG-411	Globe	50 mm (2 in) - 160	B	Solenoid	I
RG-412	Globe	50 mm (2 in) - 160	C	Solenoid	I
RG-413	Globe	50 mm (2 in) - 160	D	Solenoid	I
RG-414	Globe	50 mm (2 in) - 160	A	Solenoid	I
RG-415	Globe	25 mm (1 in) - 160	B	Solenoid	I
RG-416	Globe	25 mm (1 in) - 160	C	Solenoid	I
RG-417	Globe	25 mm (1 in) - 160	D	Solenoid	I
RG-419	Globe	80 mm (3 in) - 160	B	Solenoid	I
RG-420	Globe	80 mm (3 in) - 160	A	Solenoid	I

Table 5.4.14-1

Pilot-Operated Safety Relief Valve Parameters

Parameter	Value
Type	Pilot operated
Design pressure, kg/cm^{2}A (psia)	175.8 (2,500)
Design temperature, °C (°F)	371.1 (700)
Fluid	Saturated steam, 4,400 ppm boron, pH = 4.5 to 10.6
Set pressure, kg/cm^{2}A (psia)	173.7 (2,470)
Set pressure uncertainty, %	± 0.75
Minimum capacity, kg/hr (lb/hr)	244,900 (540,000)
Maximum capacity, kg/hr (lb/hr)	285,700 (630,000)
Maximum opening/closing dead time, sec	0.2/0.4 (hydraulic actuation)
Maximum opening/closing time (including dead time), sec	Open (hydraulic): 0.5 Close(hydraulic): 0.9
Closing pressure, kg/cm^{2}A (psia)	87 % of opening pressure
Typical materials:	
Body	Type 304 or 316, austenitic stainless steel
Spindle	Type 304 or 316, austenitic stainless steel
Inlet/outlet flange	Type 304 or 316, austenitic stainless steel

Table 5.4.14-2

Main Steam Safety Valve Parameters

Parameter	Value
Design pressure, kg/cm^{2}A (psia)	86.48 (1,230)
Design temperature, °C (°F)	299 (570)
Fluid	Saturated steam
Set pressure, kg/cm^2 g (psig)	82.5 (1,174) 84.7 (1,205) 86.5 (1,230) 86.5 (1,230) 86.5 (1,230)
Set pressure uncertainty, manufacture/operation, %	±1/±3
Minimum capacity, kg/sec (lbm/hr) at 110 % of steam generator design pressure	2,394 (19 × 10^6) total (20 valves)
Type	Spring loaded
Orifice area, cm^2 (in^2)	113.1 (17.53)
Accumulation, %	3
Back pressure:	
Maximum buildup/maximum superimposed, kg/cm^{2}G (psig)	8.79/0 (125/0)
Approximate dry weight, kg (lbs)	970 (2,140)
Blowdown, %	5
Typical materials: Body Disc Nozzle	 ASME SA 216M Gr. WCB (1) ASME SA 564M Type 630 (2) ASME SA 105M (3)

(1) ASME SA 105, "Specification for Carbon Steel Forgings for Piping Applications," ASME, 2008.

(2) ASTM A565, GR. 616, "Standard Specification for Martensitic Stainless Steel Bars for High-Temperature Service," ASTM, 2010.

(3) ASME SA 182, GR. F316.

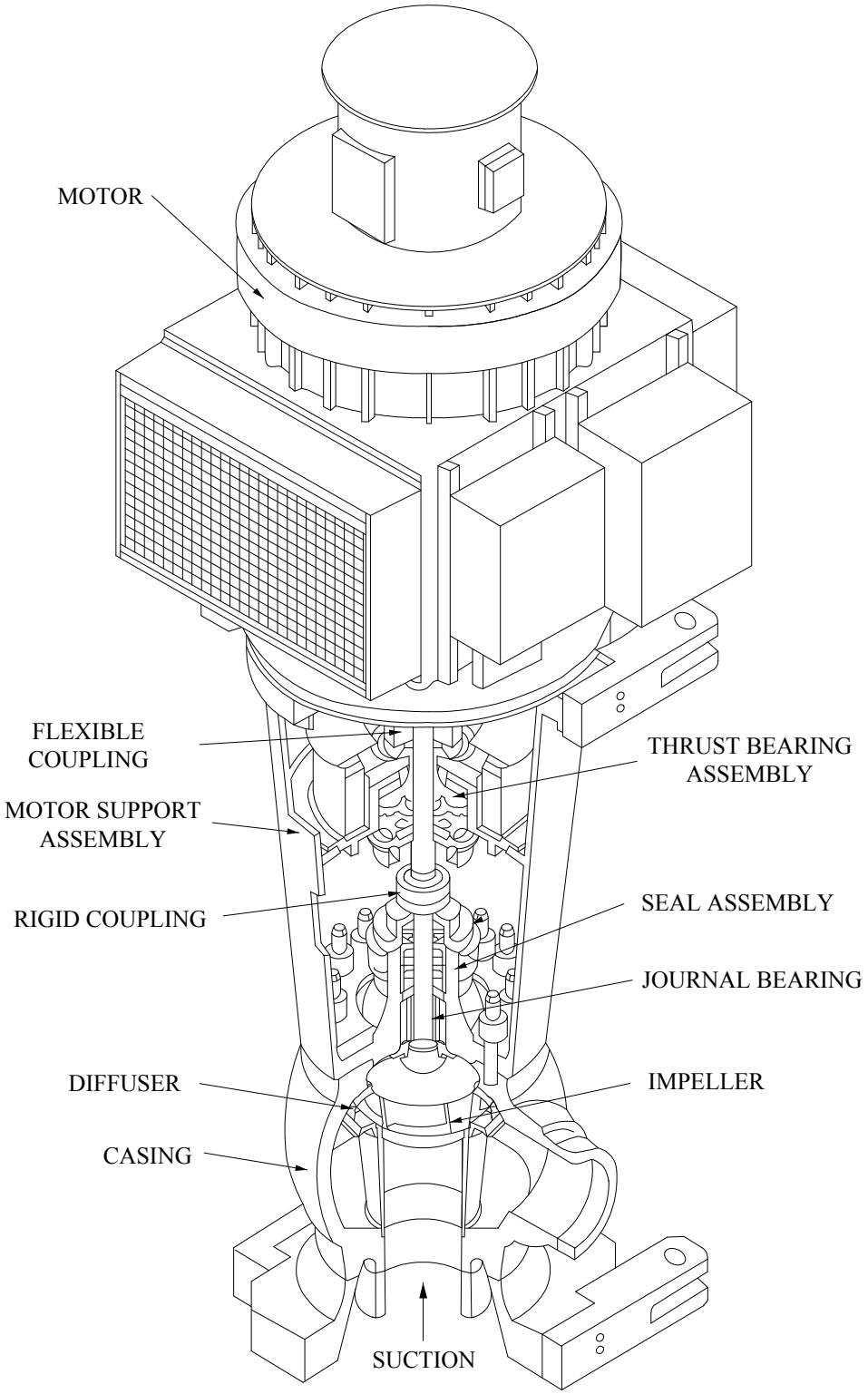

Figure 5.4.1-1 Reactor Coolant Pump

NO.	NAME	NO. REQ'D
1	PRIMARY INLET NOZZLE	1
2	PRIMARY OUTLET NOZZLE	2
3	DOWNCOMER FEEDWATER NOZZLE	1
4	STEAM OUTLET NOZZLE	2
5	BLOWDOWN NOZZLE	2
6	PRIMARY MANWAY	2
7	SECONDARY MANWAY	2
8	HANDHOLE	2
9	ECONOMIZER FEEDWATER NOZZLE	2
10	RECIRCULATION FEEDWATER NOZZLE	1

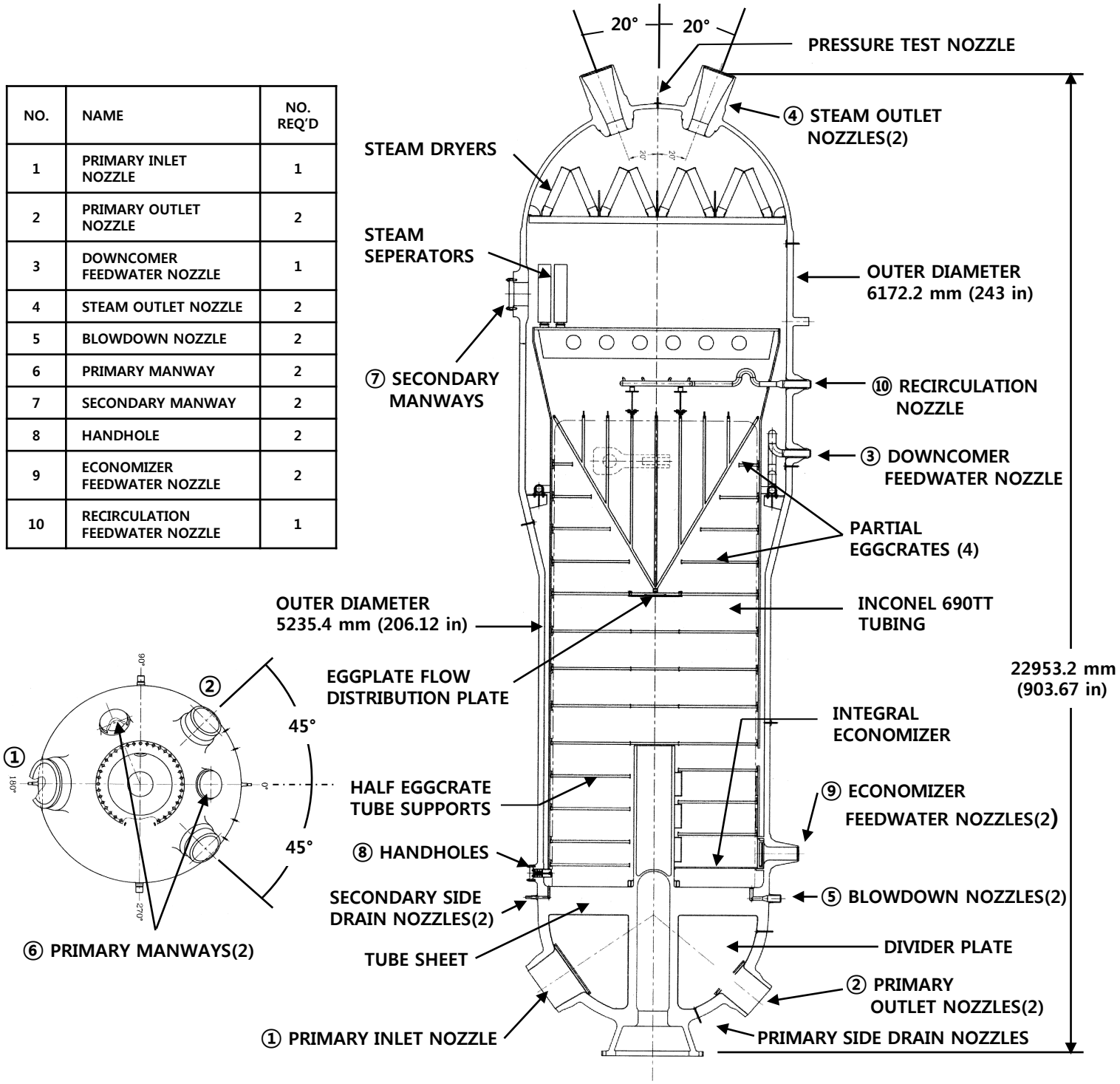

Figure 5.4.2-1 Steam Generator

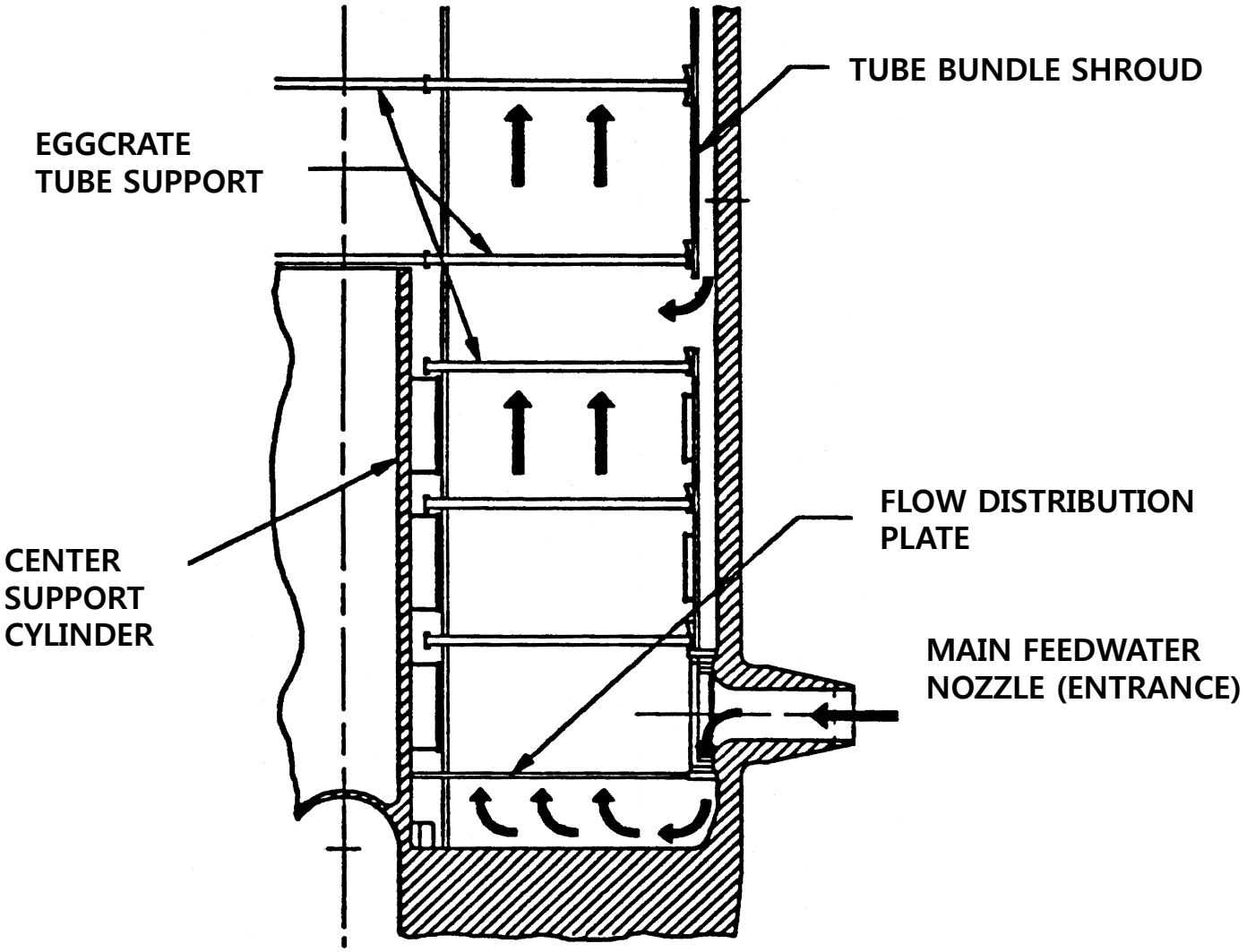

Figure 5.4.2-2 Steam Generator Economizer and Lower Tube Bundle Region

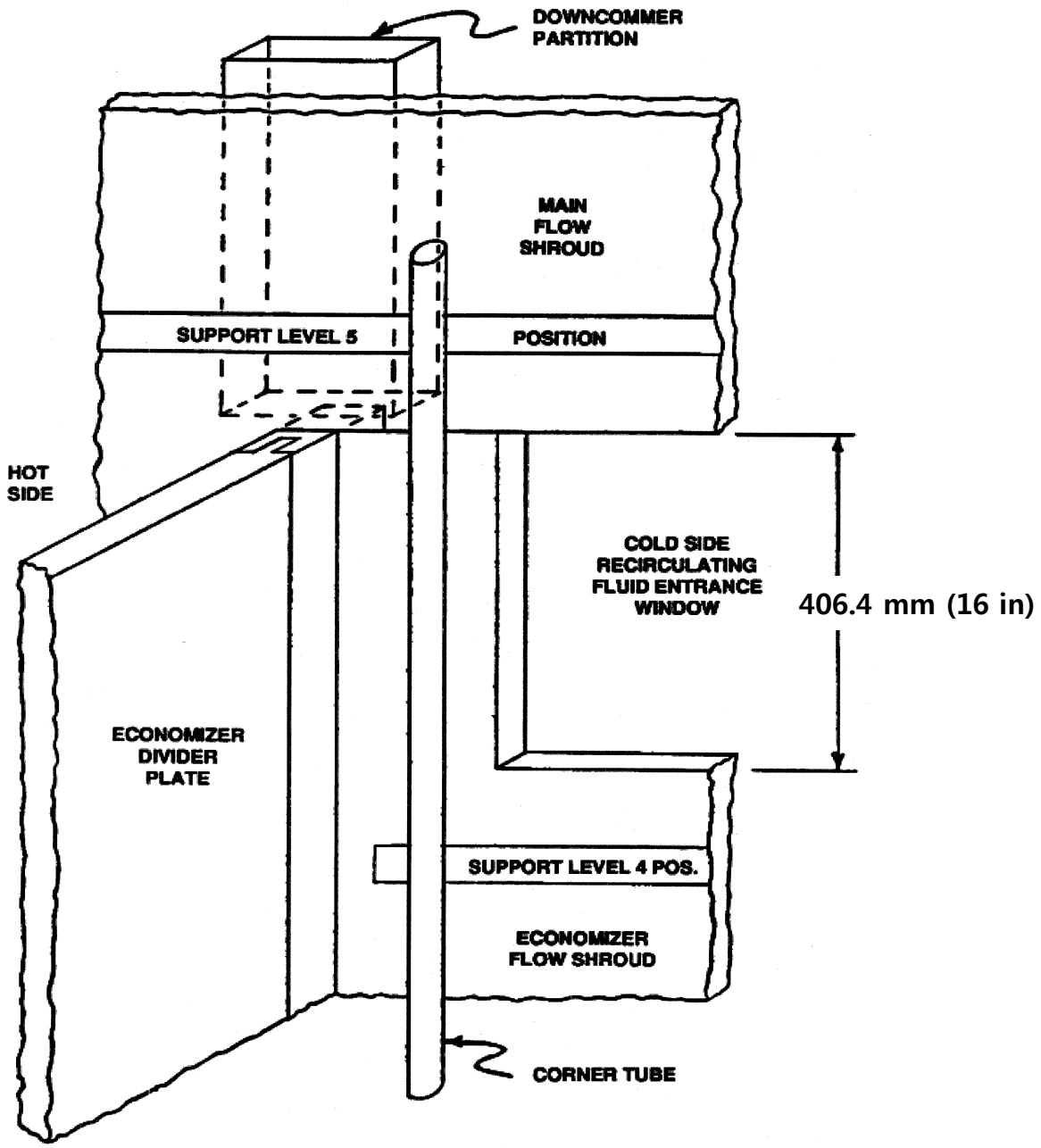

Figure 5.4.2-3 Steam Generator Cold Side Recirculating Fluid Entrance Region

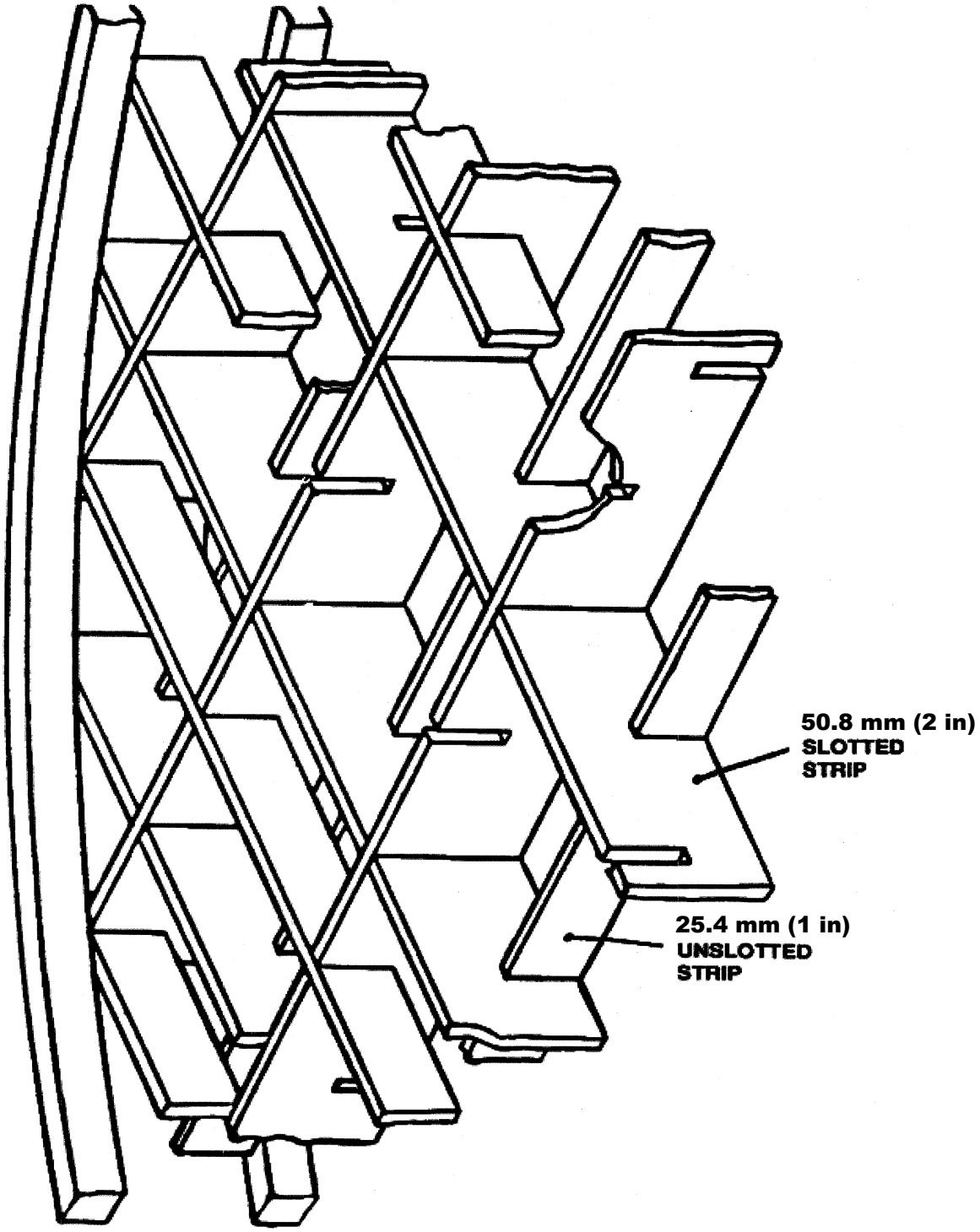

Figure 5.4.2-4 Steam Generator Tube Eggcrate Support

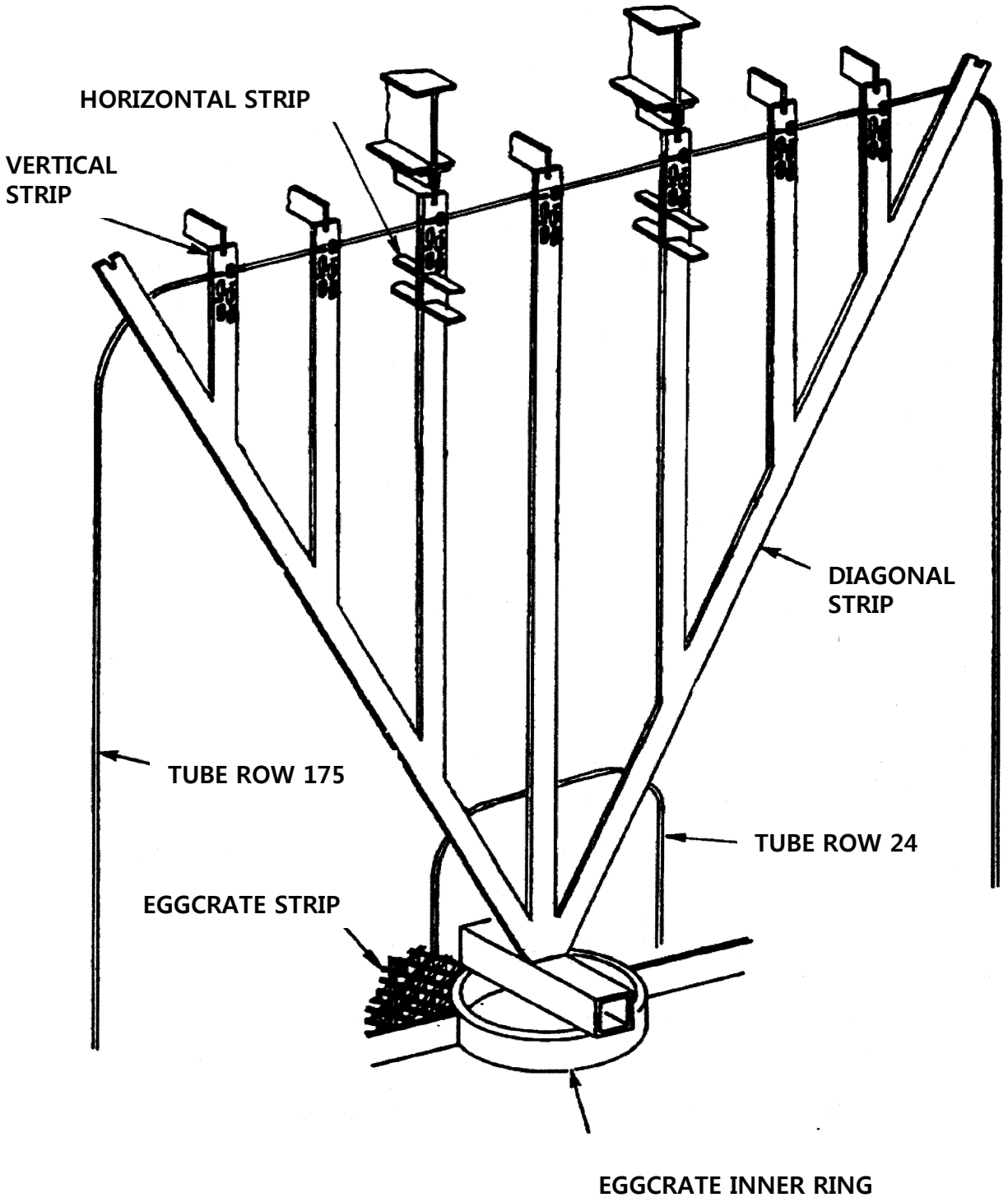

Figure 5.4.2-5 Steam Generator Tube Vertical Supports

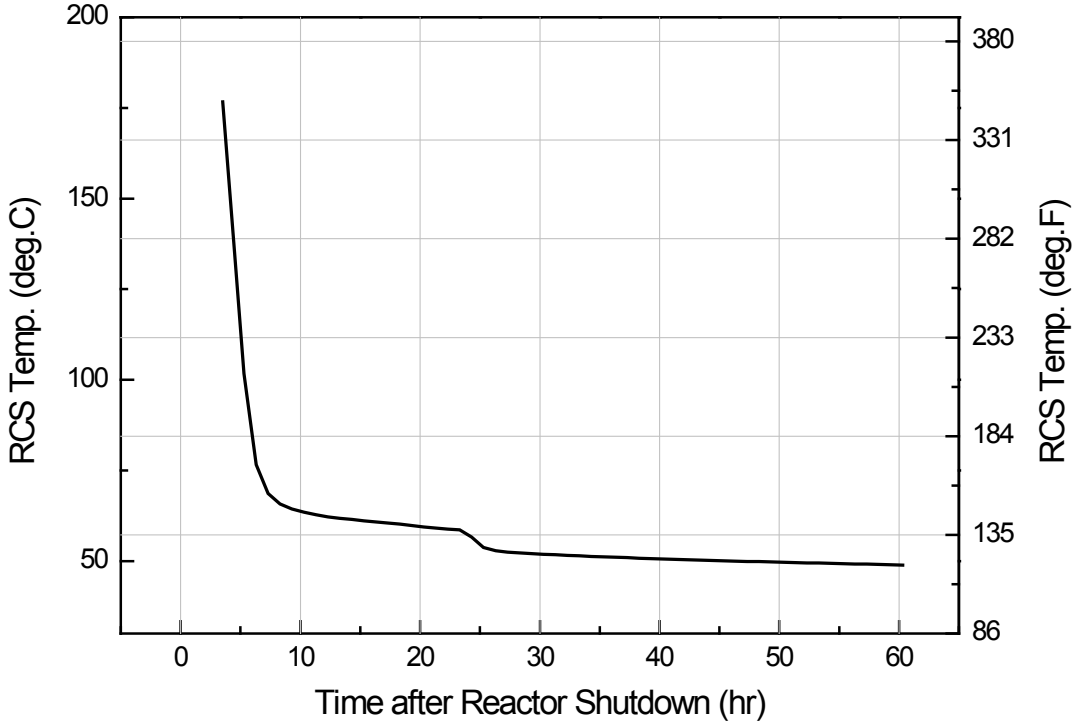

Figure 5.4.7-1 Shutdown Cooling System; Two Train Cooldown

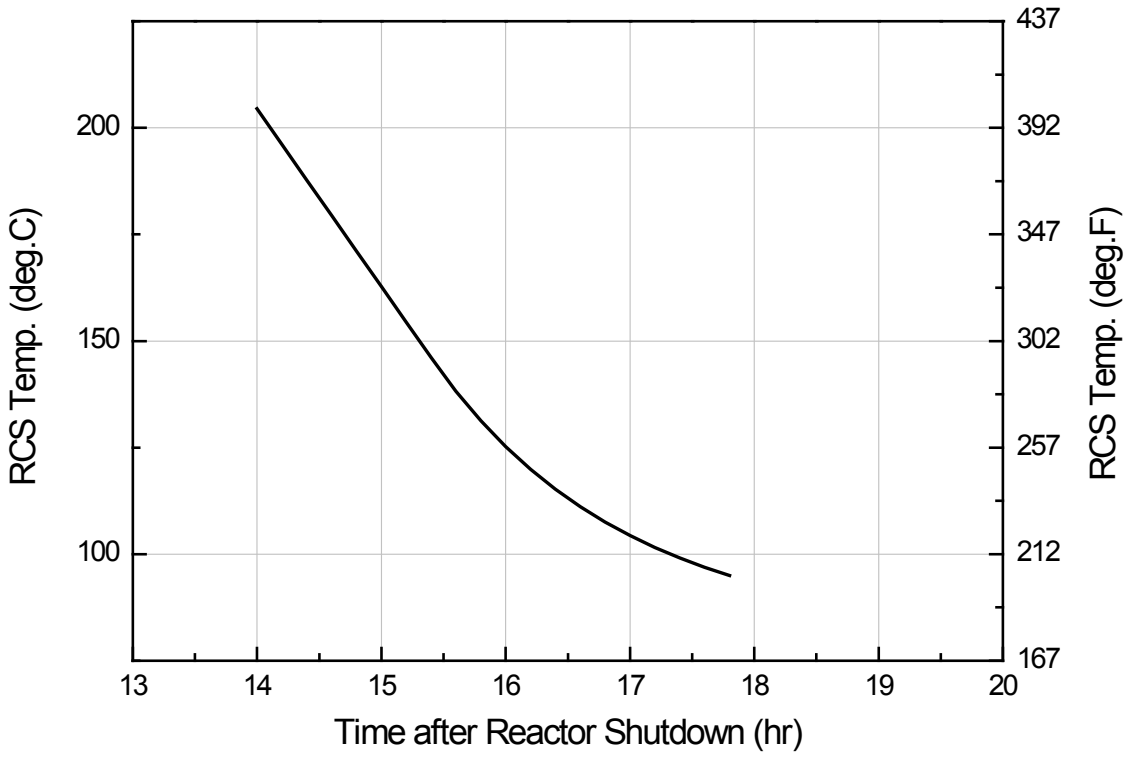

Figure 5.4.7-2 Shutdown Cooling System; One Train Cooldown

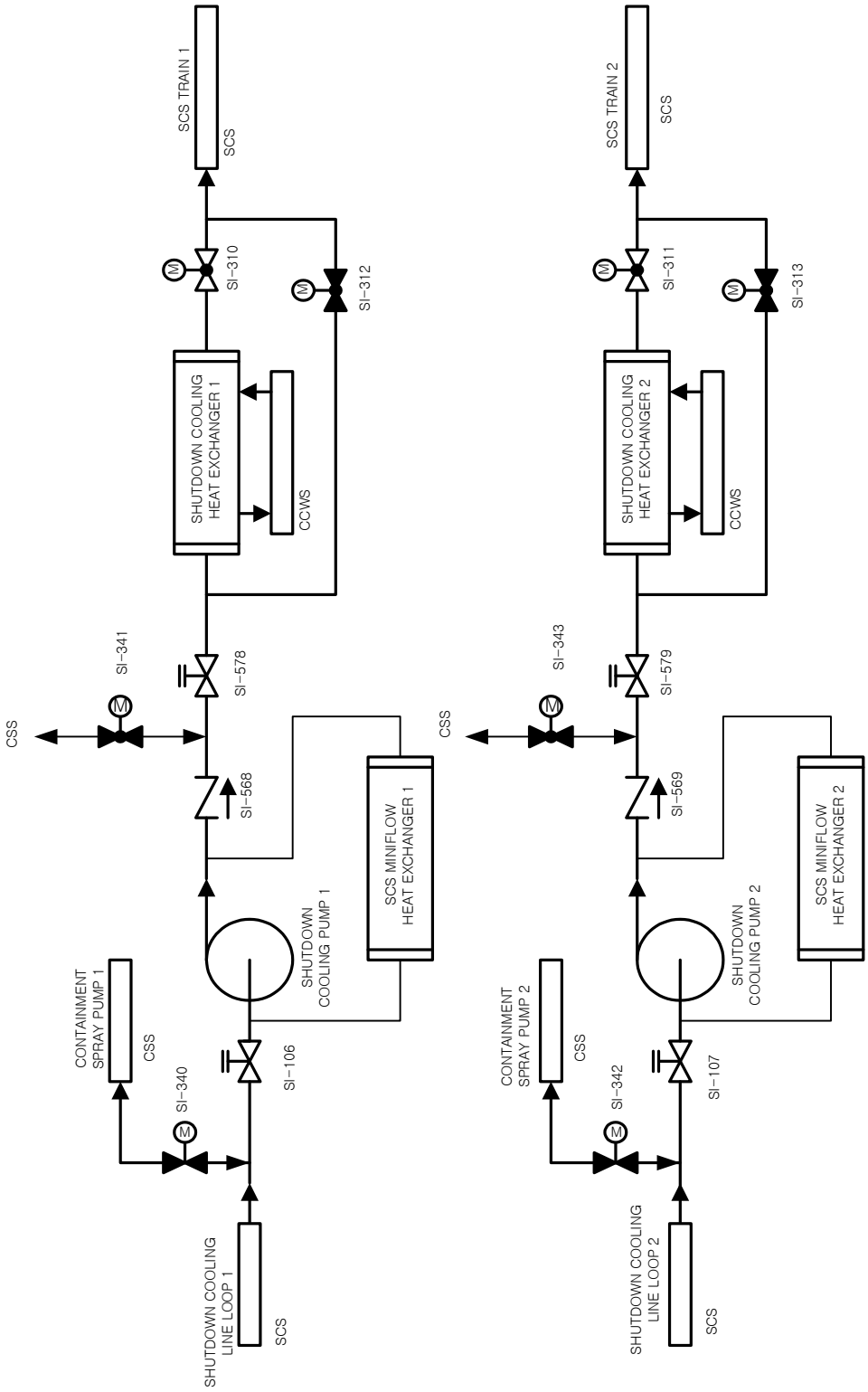

Figure 5.4.7-3 Shutdown Cooling System Flow Diagram; Shutdown Cooling Mode (1 of 2)

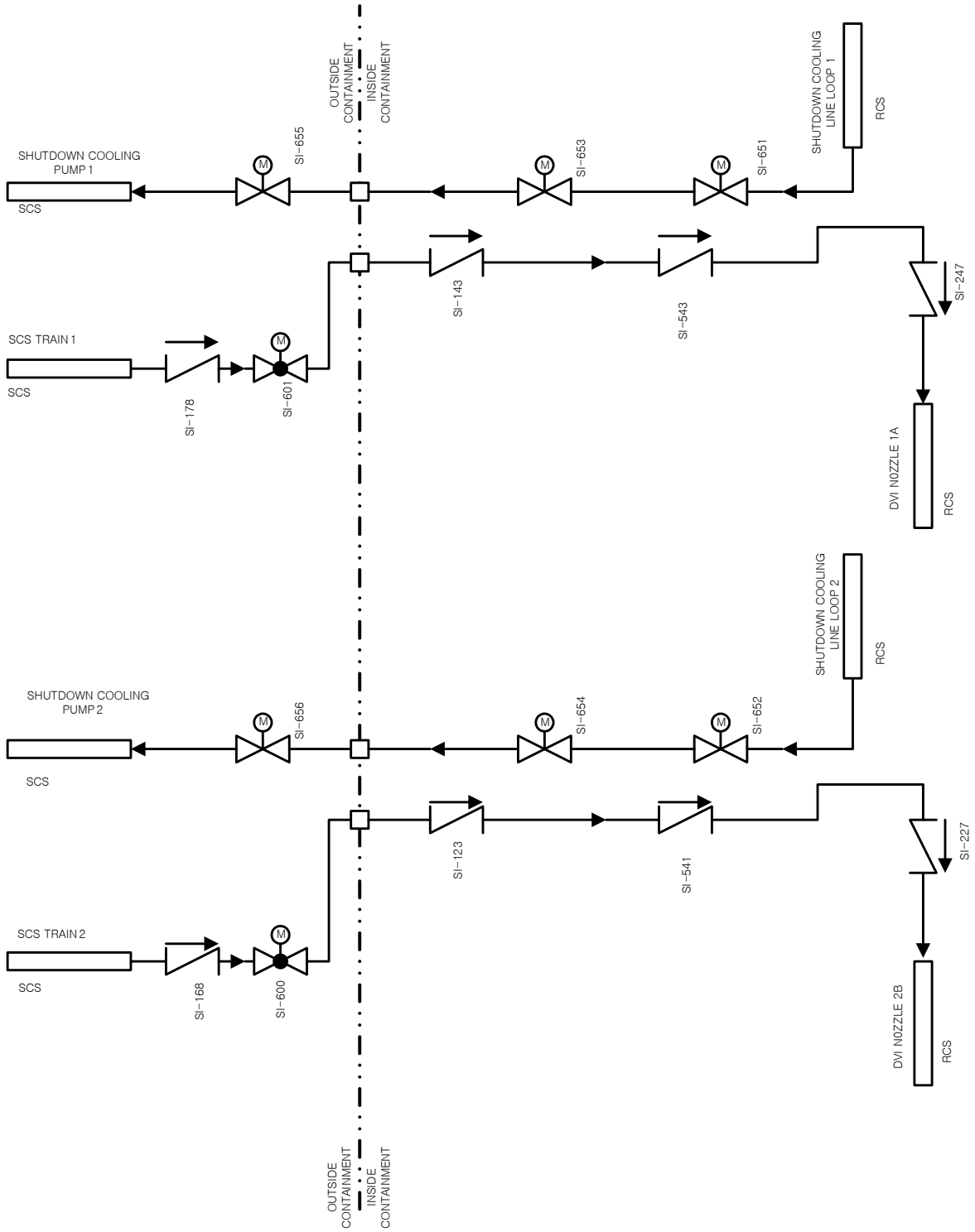

Figure 5.4.7-3 Shutdown Cooling System Flow Diagram; Shutdown Cooling Mode (2 of 2)

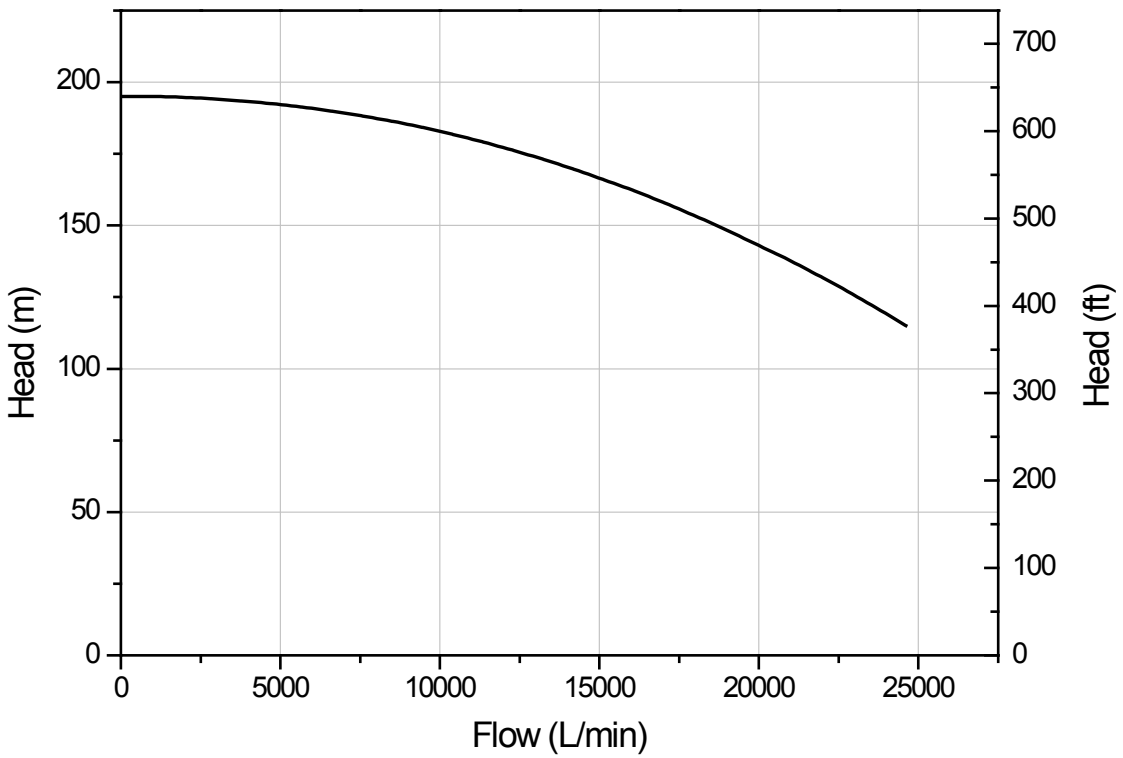

Figure 5.4.7-4 Shutdown Cooling Pump Characteristic Curve

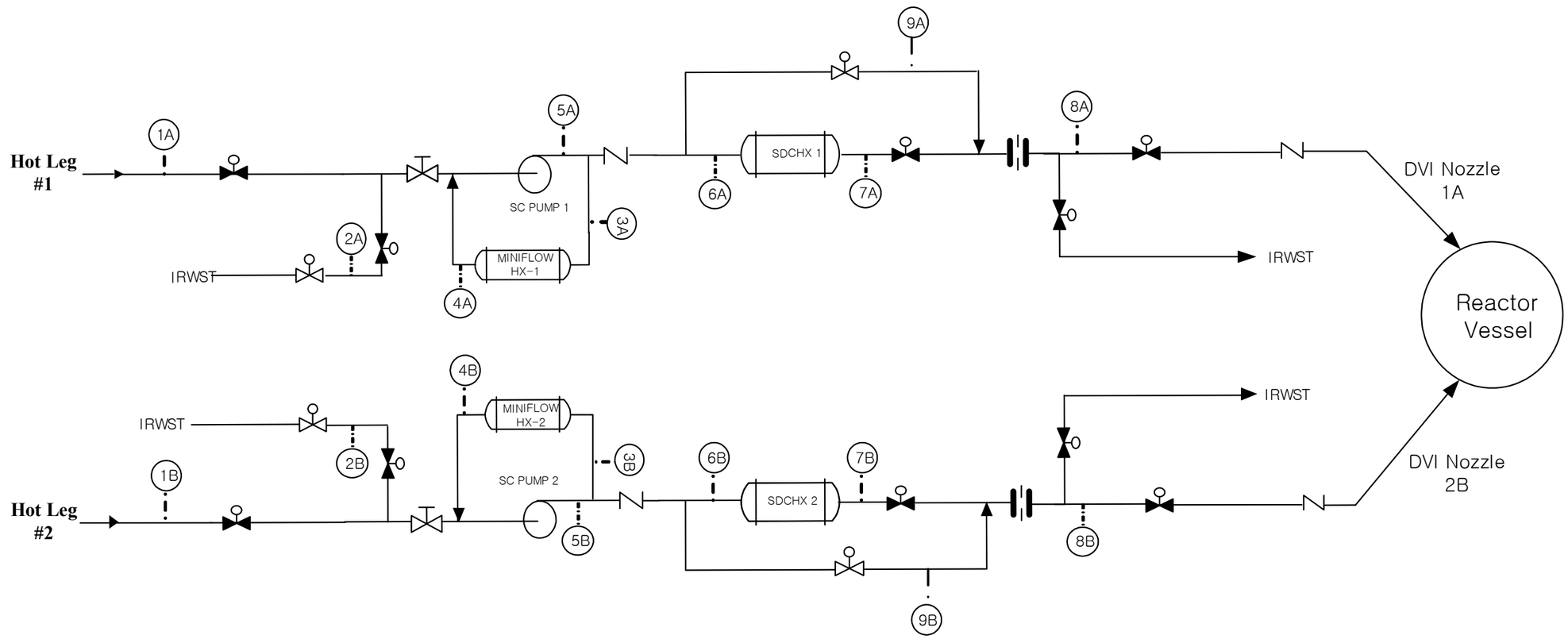

Figure 5.4.7-5 Shutdown Cooling System Mode Diagram (1 of 2)

Location		1A	2A	3A	4A	5A	6A	7A	8A	9A	1B	2B	3B	4B	5B	6B	7B	8B	9B
Normal Shutdown	Pressure (kg/cm^{2}A)	31.6	1.3	44.2	44.2	44.2	44.2	44.2	44.2	44.2	31.6	1.3	44.2	44.2	44.2	44.2	44.2	44.2	44.2
	Temperature (°C)	~176.7	~48.9	~176.7	~151.1	<176.7	~176.7	~53.3	~53.3	~53.3	~176.7	~48.9	~176.7	~151.1	<176.7	~176.7	~53.3	~53.3	~53.3
	Flow Rate (L/min)	18,927	0	1,609	1,609	20,536	18,927	18,927	18,927	0	18,927	0	1,609	1,609	20,536	18,927	18,927	18,927	0
Safety Shutdown	Pressure (kg/cm^{2}A)	28.1	1.3	44.2	44.2	44.2	44.2	44.2	44.2	44.2	28.1	1.3	44.2	44.2	44.2	44.2	44.2	44.2	44.2
	Temperature (°C)	~193.3	~48.9	~193.3	~151.1	~193.3	~193.3	~53.3	~53.3	~53.3	~193.3	~48.9	-	-	-	-	-	-	-
	Flow Rate (L/min)	18,927	0	1,609	1,609	20,536	18,927	18,927	18,927	0	0	0	0	0	0	0	0	0	0
Refueling	Pressure (kg/cm^{2}A)	1.3	1.3	19.8	19.8	19.8	19.8	19.8	19.8	19.8	1.3	1.3	19.8	19.8	19.8	19.8	19.8	19.8	19.8
	Temperature (°C)	48.9	~48.9	48.9	~46.7	48.9	48.9	~40.0	~40.0	~40.0	48.9	~48.9	48.9	~46.7	48.9	48.9	~40.0	~40.0	~40.0
	Flow Rate (L/min)	18,927	0	1,609	1,609	20,536	18,927	18,927	18,927	0	18,927	0	1,609	1,609	20,536	18,927	18,927	18,927	0
Startup	Pressure (kg/cm^{2}A)	31.6	1.3	44.2	44.2	44.2	44.2	44.2	44.2	44.2	31.6	1.3	44.2	44.2	44.2	44.2	44.2	44.2	44.2
	Temperature (°C)	~176.7	~48.9	~176.7	~151.1	~176.7	~176.7	~176.7	~176.7	~176.7	~176.7	~48.9	~176.7	~151.1	~176.7	~176.7	~176.7	~176.7	~176.7
	Flow Rate (L/min)	18,927	0	1,609	1,609	20,536	0	0	18,927	18,927	18,927	0	1,609	1,609	20,536	0	0	18,927	18,927

Figure 5.4.7-5 Shutdown Cooling System Mode Diagram (2 of 2)

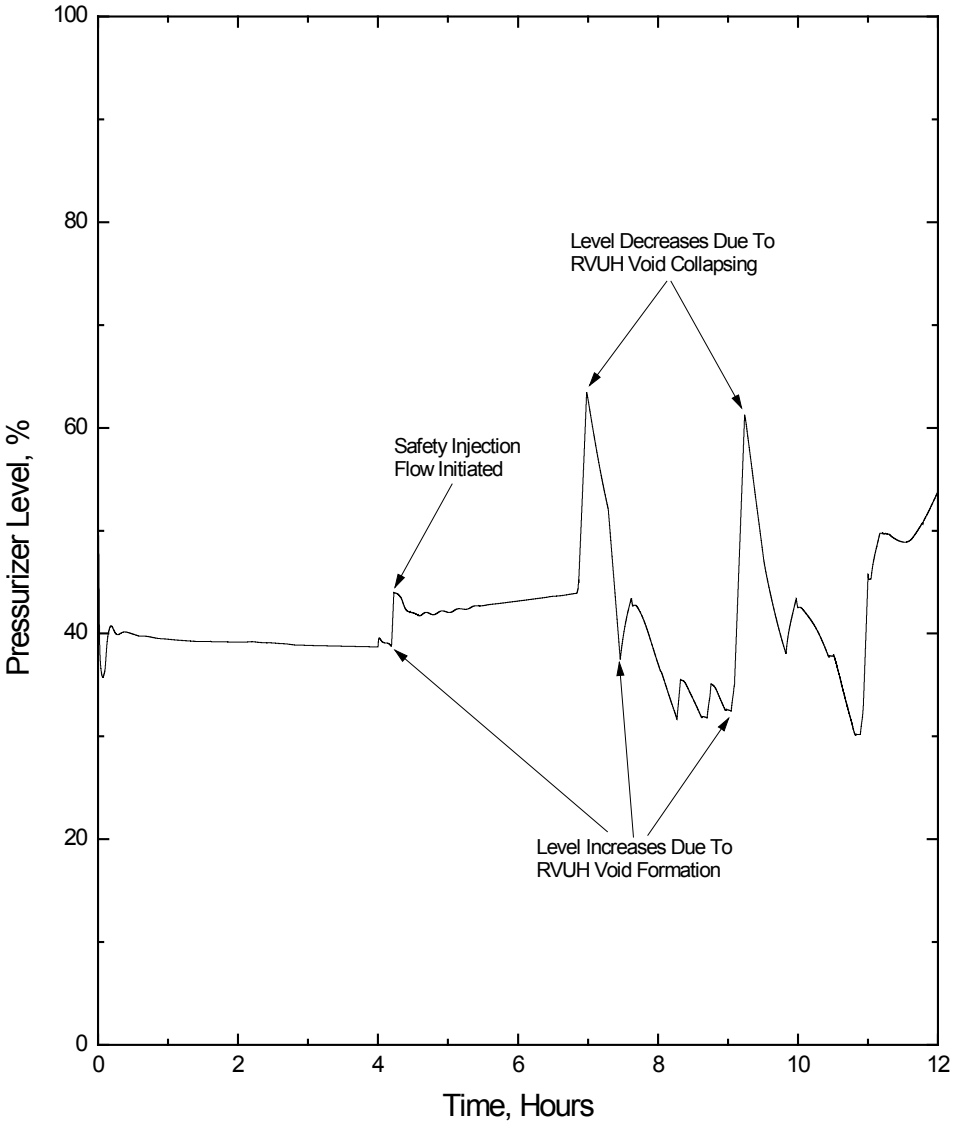

Figure 5.4.7-6 Pressurizer Level vs. Time for NCC Transient

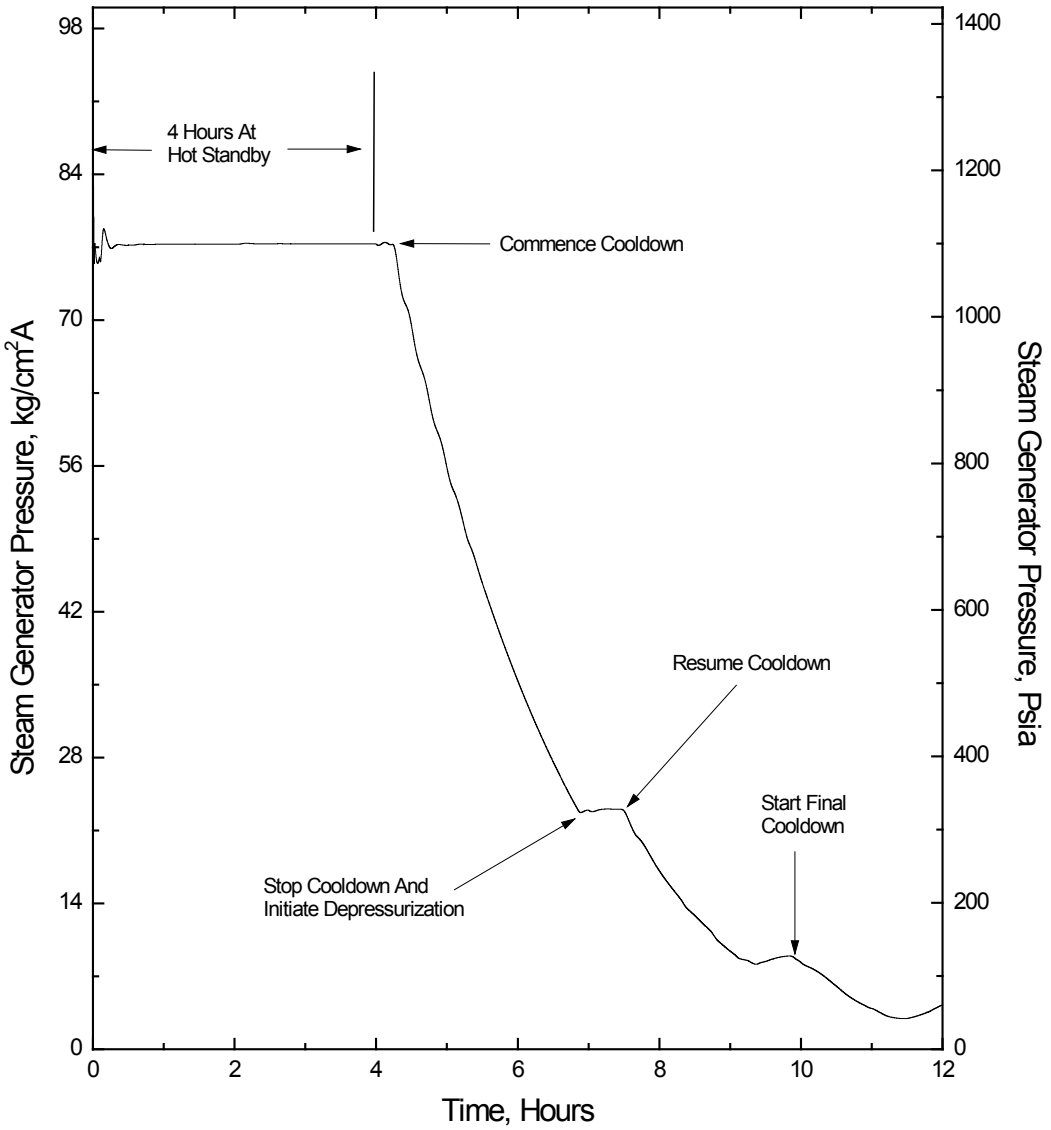

Figure 5.4.7-7 Steam Generator Pressure vs. Time for NCC Transient

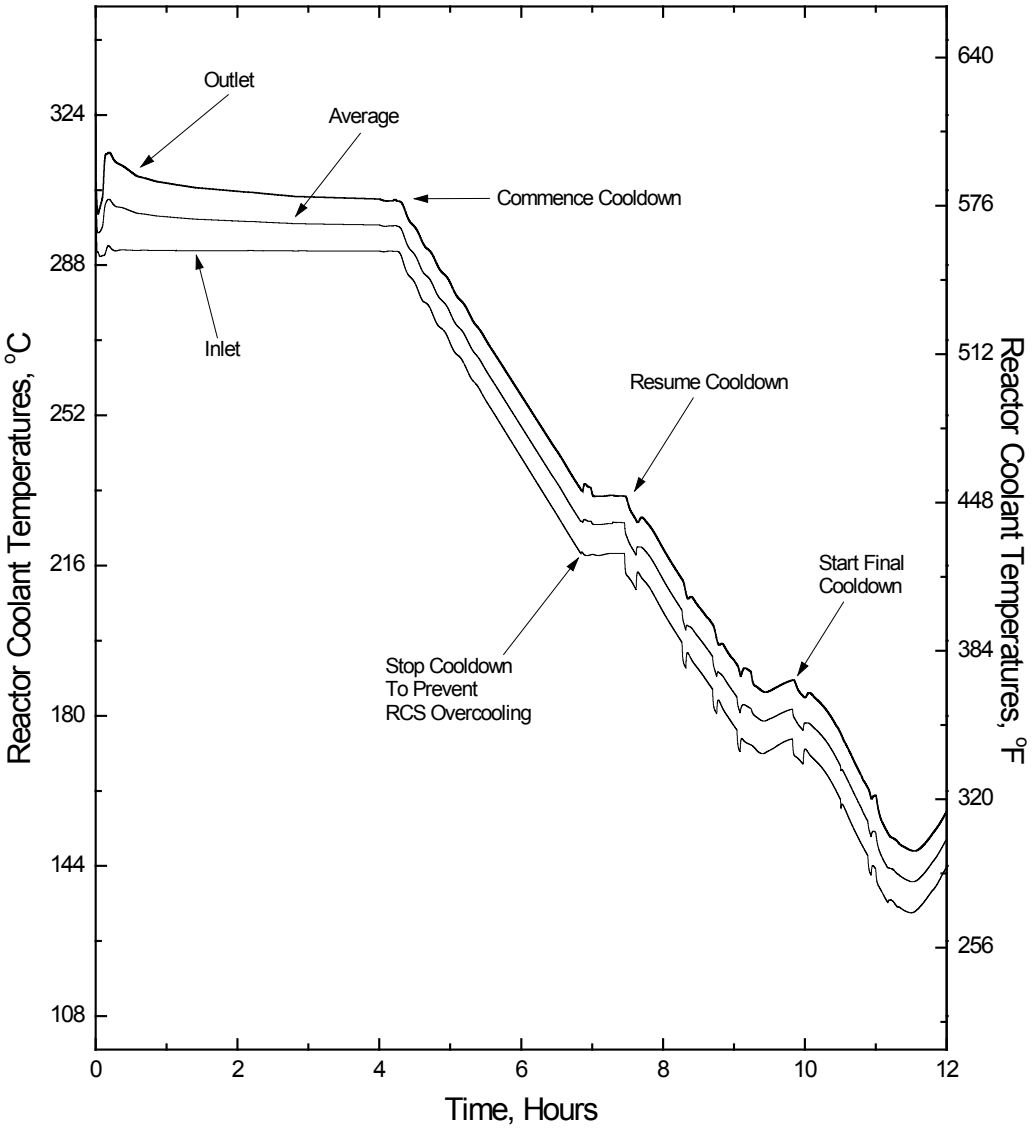

Figure 5.4.7-8 Reactor Coolant Temperatures vs. Time for NCC Transien

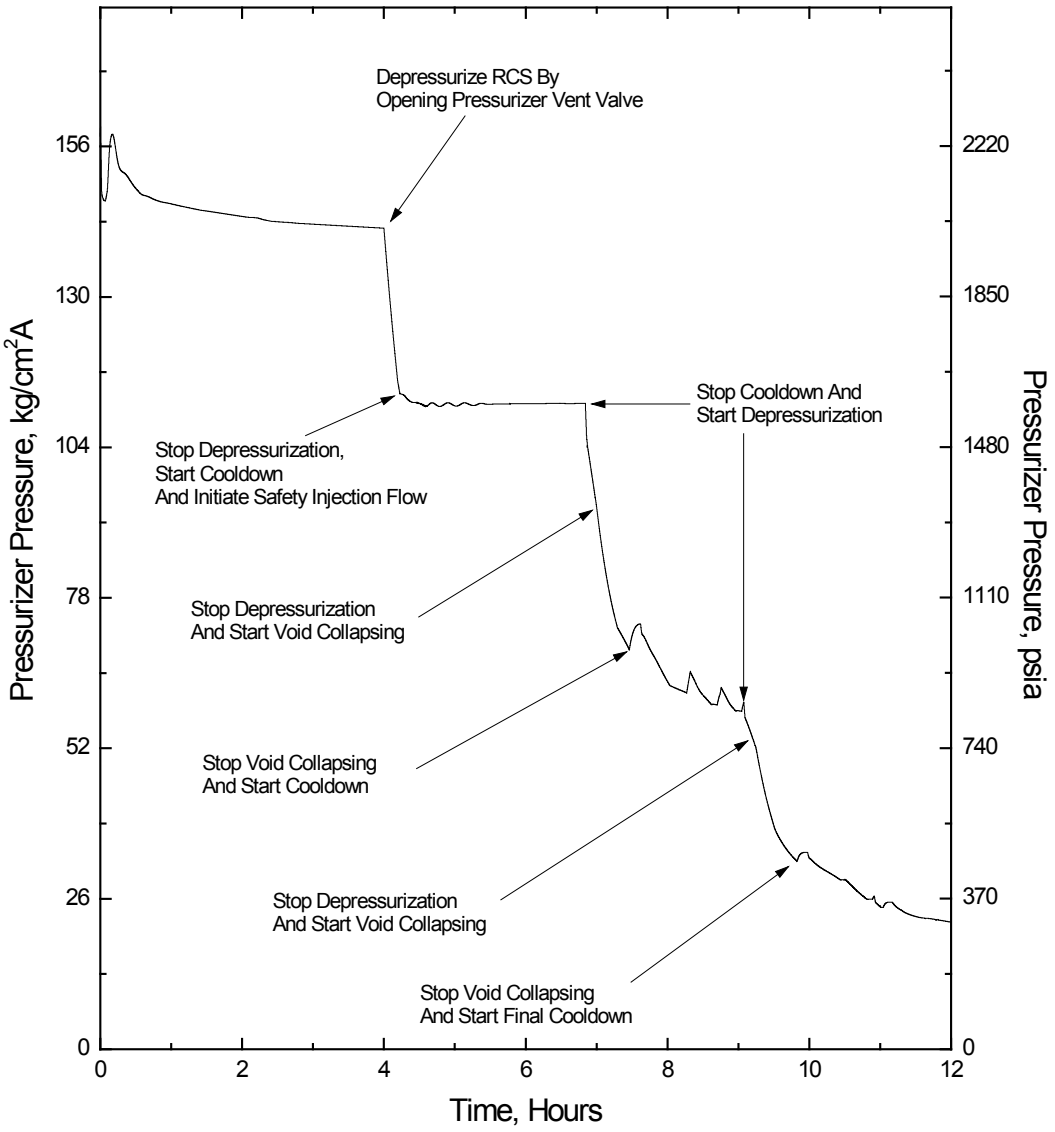

Figure 5.4.7-9 Pressurize Pressure vs. Time for NCC Transient

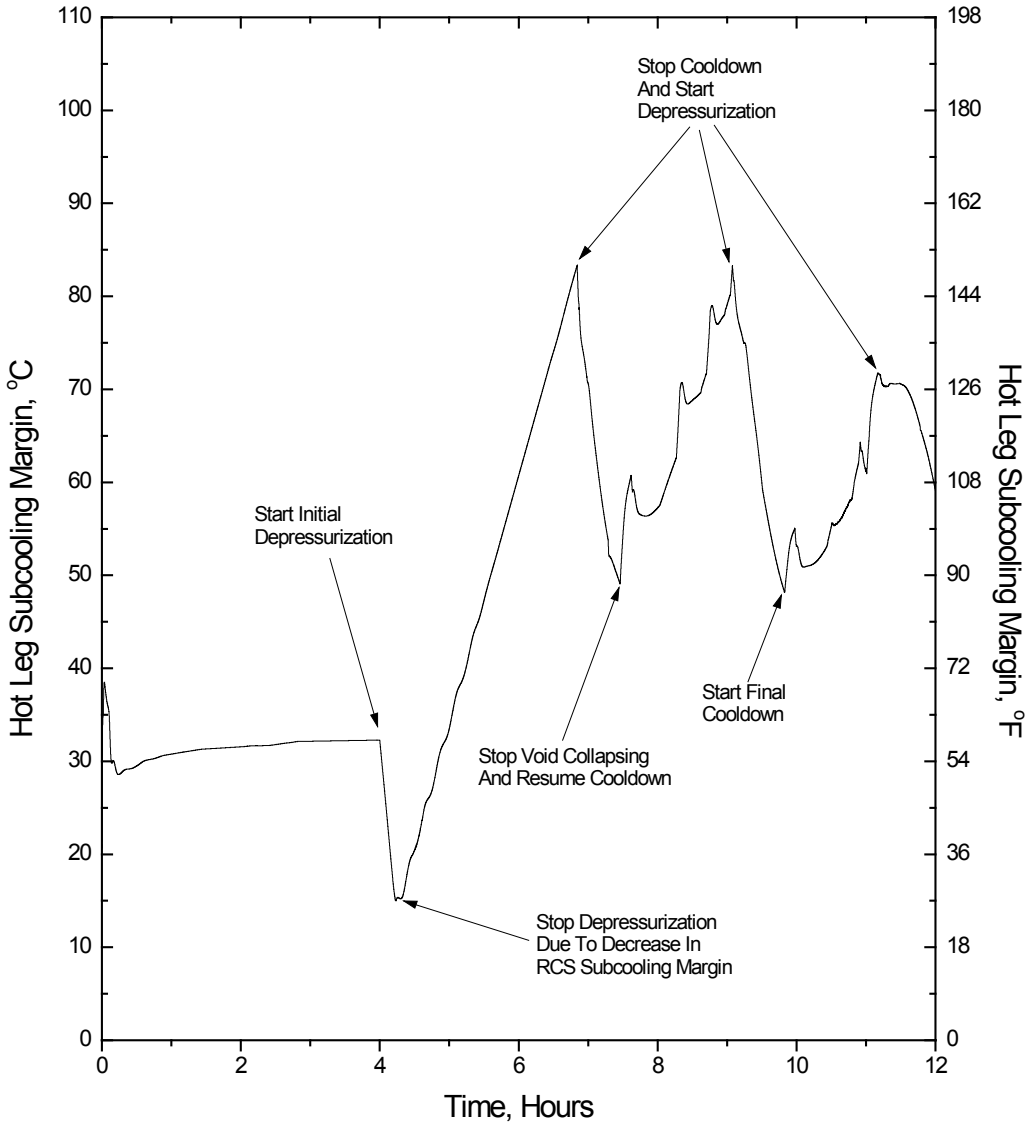

Figure 5.4.7-10 Hot Leg Subcooling Margin vs. Time for NCC Transient

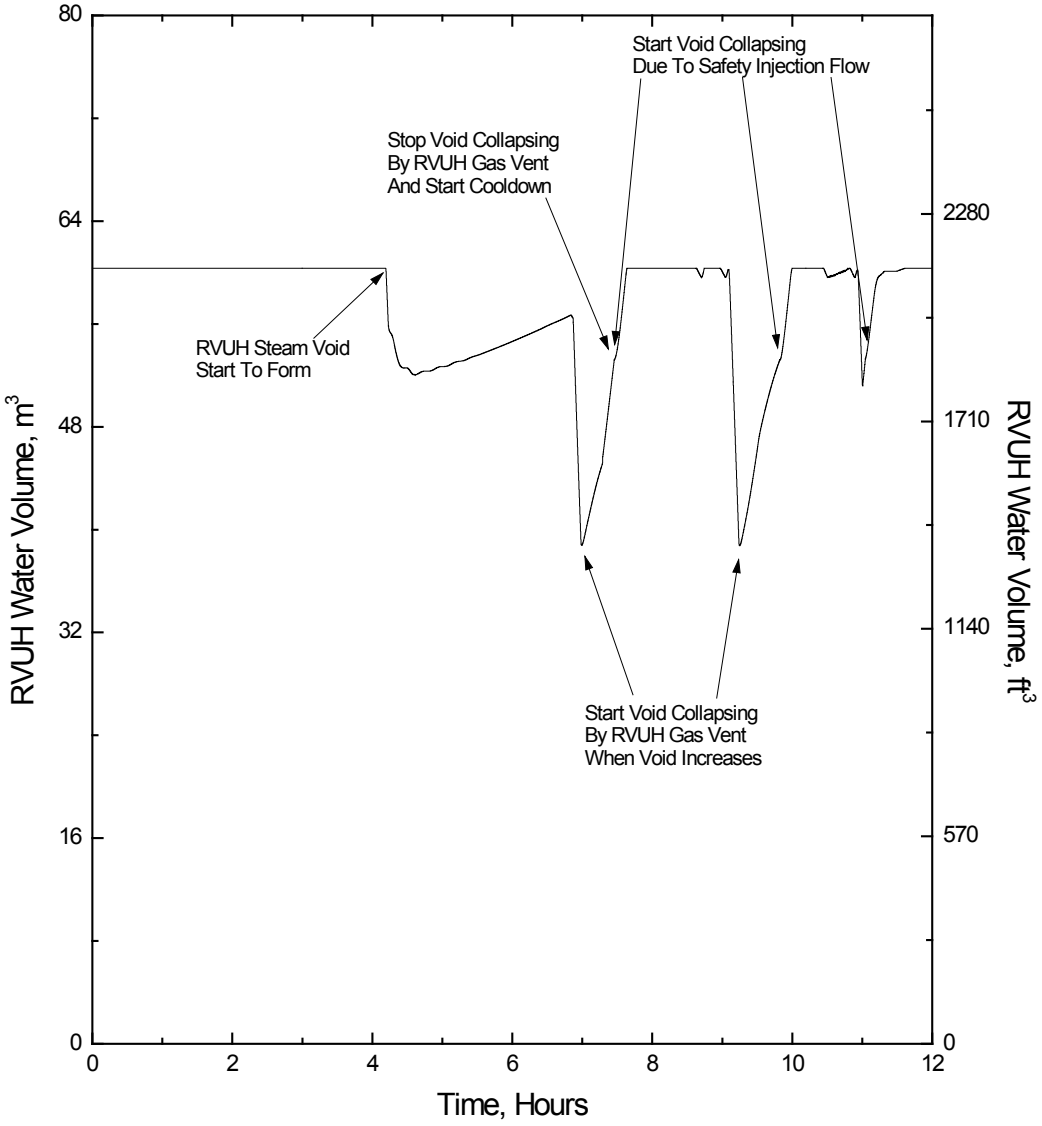

Figure 5.4.7-11 RVUH Water Volume vs. Time for NCC Transient

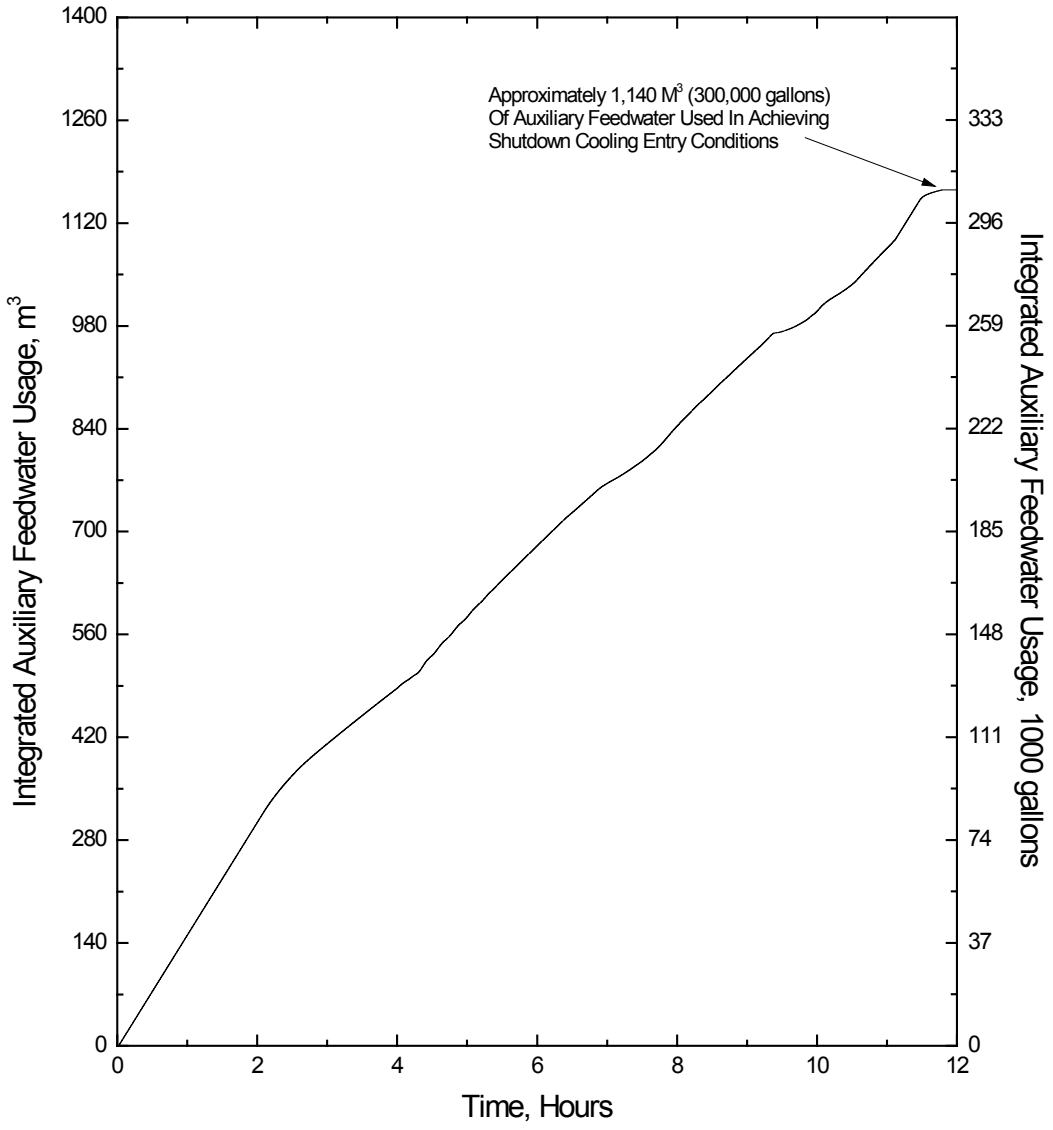

Figure 5.4.7-12 Integrated Auxiliary Feedwater Usage vs. Time for NCC Transient

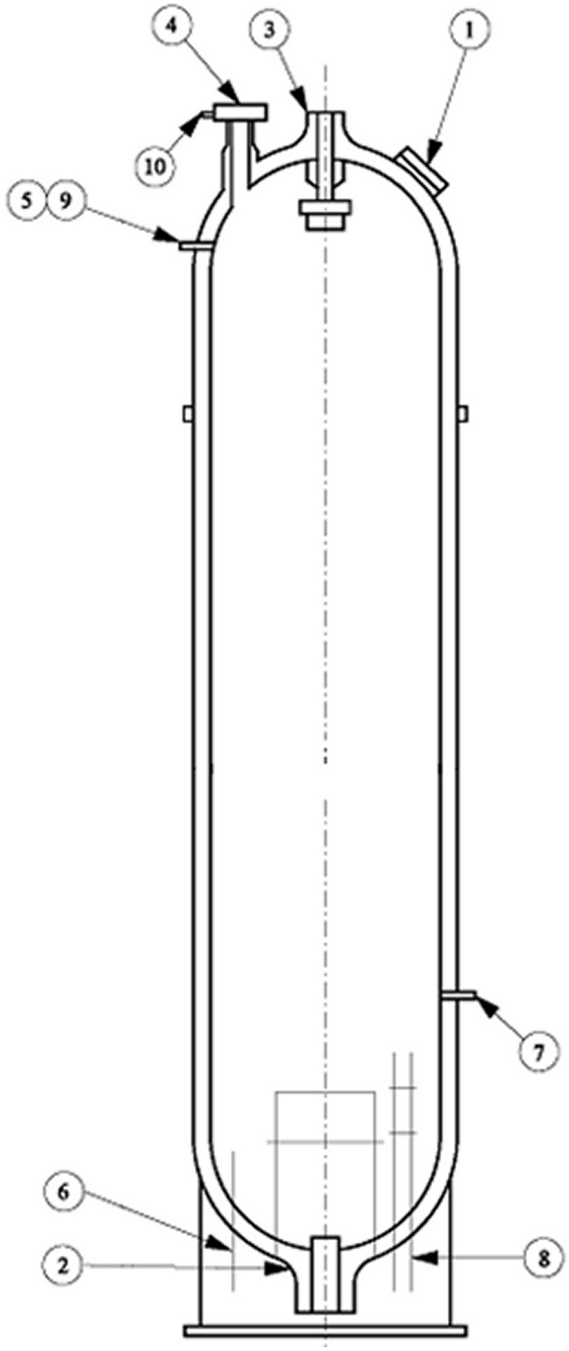

NOZZLE SCHEDULE		
NO.	SERVICE	NO. REQUIRED
1	MANWAY	1
2	SURGE	1
3	SPRAY	1
4	POSRV	4
5	LEVEL-UPPER	3
6	LEVEL-LOWER	2
7	TEMPERATURE	2
8	HEATER	48
9	PRESSURE	4
10	RCGVS	4

Figure 5.4.10-1 Pressurizer

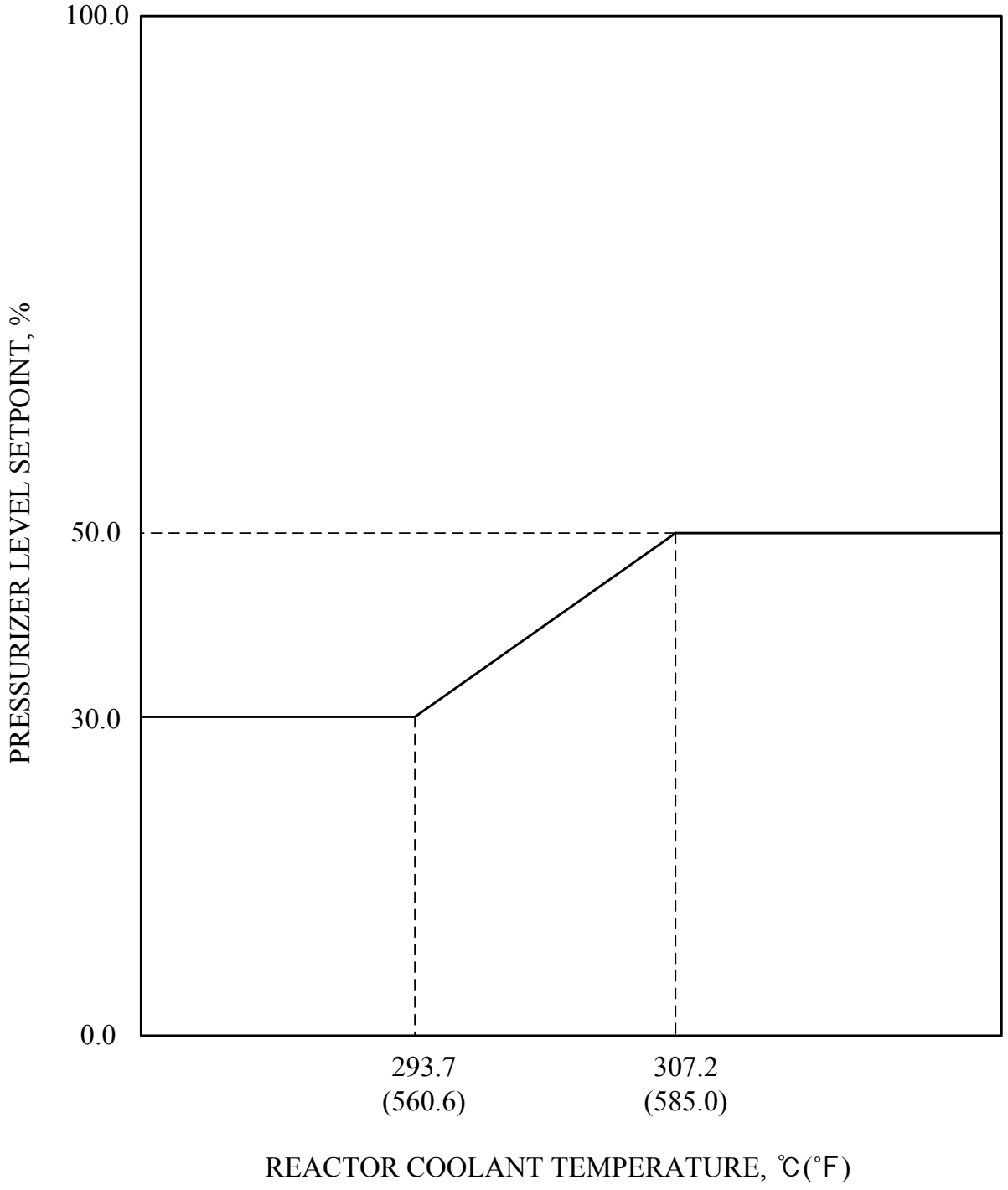

Figure 5.4.10-2 Pressurizer Level Setpoint Program

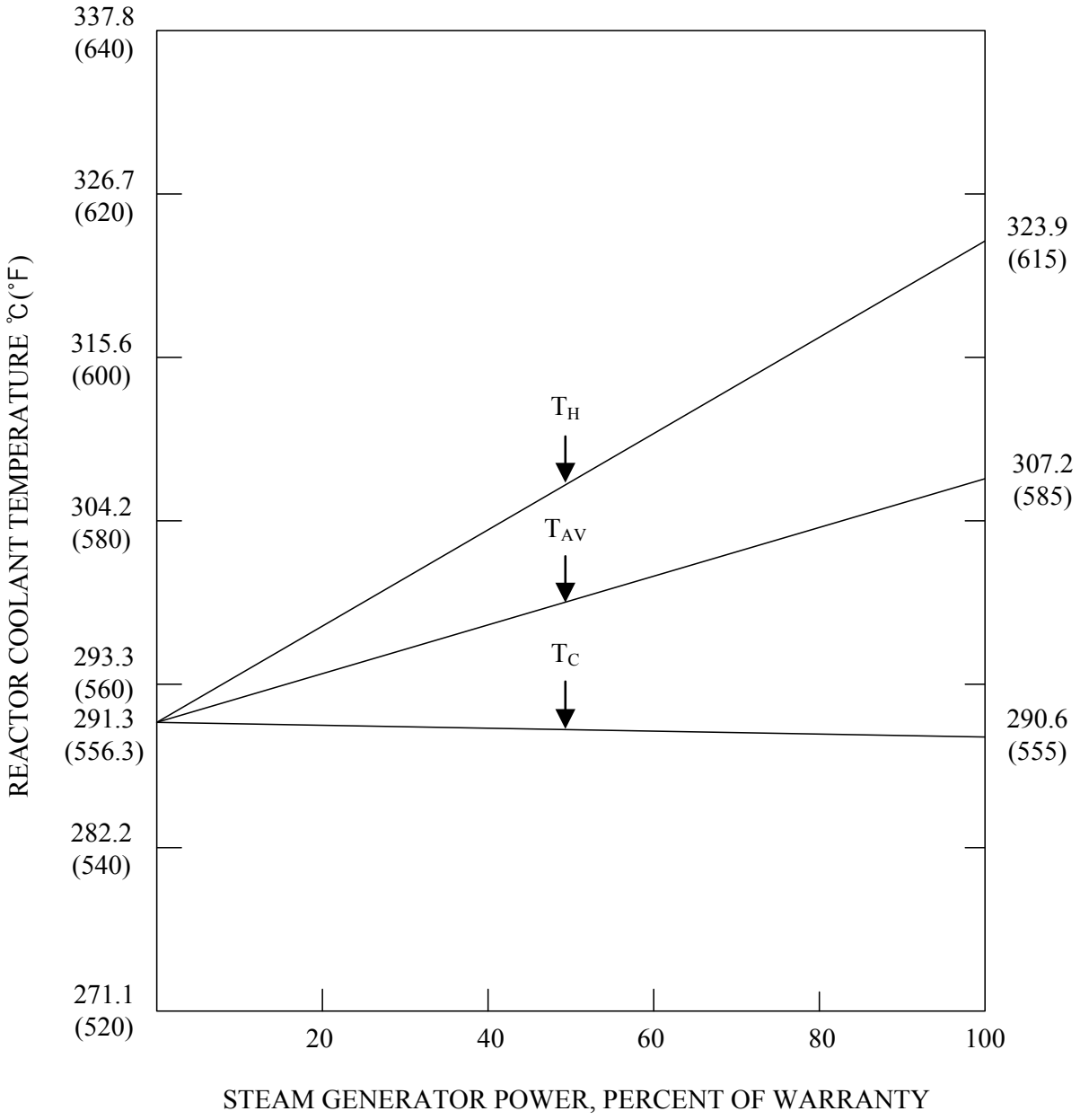

Figure 5.4.10-3 Temperature Control Program

PRESSURIZER LEVEL ERRO R mm (in)	ACTION	
+1,244.6 (+49)	HIGH LEVEL ERROR ALARM	↑
+1,168.4 (+46)	LETDOWN ORIFICE ISOLATION VALVE (CH-110Z) OPEN	↑
+1,117.6 (+44)	CLEAR HIGH LEVEL ERROR ALARM	↓
+431.8 (+17)	LETDOWN ORIFICE ISOLATION VALVE (CH-110Z) CLOS E ENERGIZE BACKUP HEATERS	↓ ↑
+355.6 (+14)	BACKUP HEATERS OFF	↓
-355.6 (-14)	CLEAR LOW LEVEL ERROR ALARM	↑
-482.6 (-19)	LOW LEVEL ERROR ALARM	↓
-1,955.8 (-77)	LETDOWN ORIFICE ISOLATION VALVE (CH-110Y) OPEN	↑
-3,251.2 (-128)	LETDOWN ORIFICE ISOLATION VALVE (CH-110Y) CLOS E	↓

Note : 1. ↑: Level increasing relative to setpoint
↓: Level decreasing relative to setpoint

Figure 5.4.10-4 Pressurizer Level Error Program

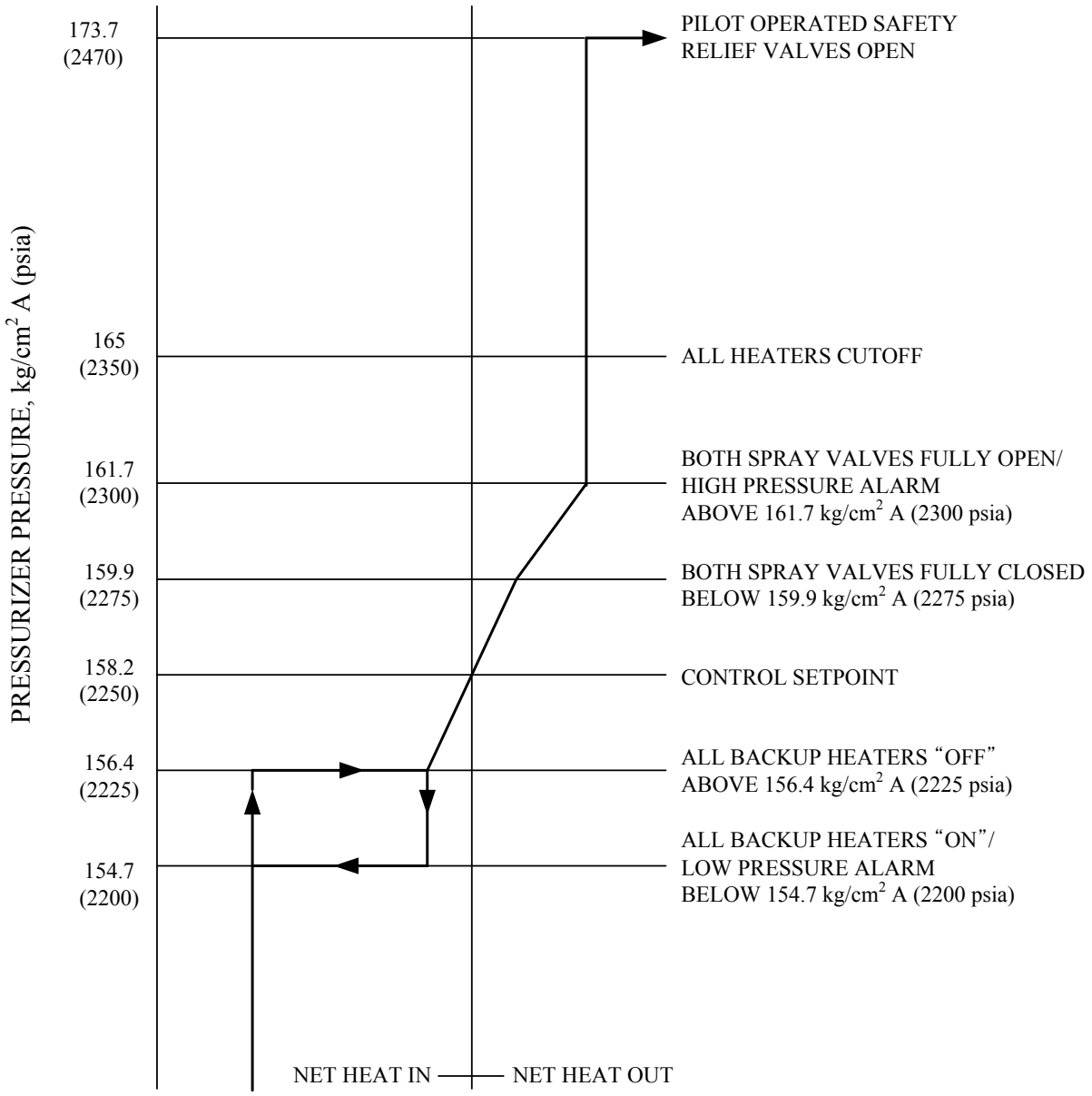

Note : The proportional heater controls pressurizer pressure using Proportional-Integral controller.

Figure 5.4.10-5 Pressurizer Pressure Control Program

NOTES

1. THE STRAIGHT REMOVAL SPOOL MUST BE INSTALLED DURING ALL MODES OF OPERATION EXCEPT THE VENTING OPERATION DURING RCS FILLING, WHEN THE SIGHT GLASS IS USED.

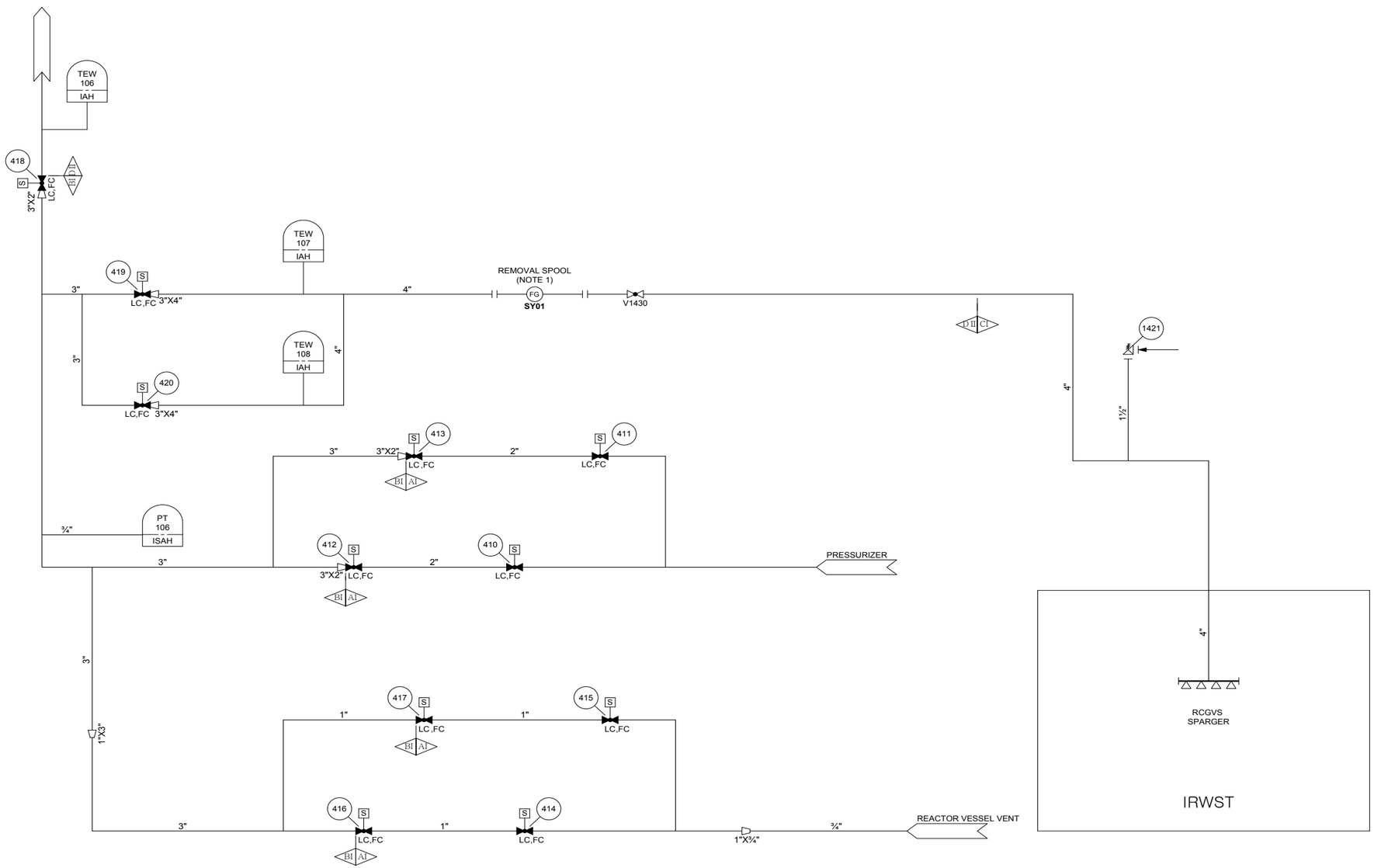

Figure 5.4.12-1 Reactor Coolant Gas Vent System Flow Diagram

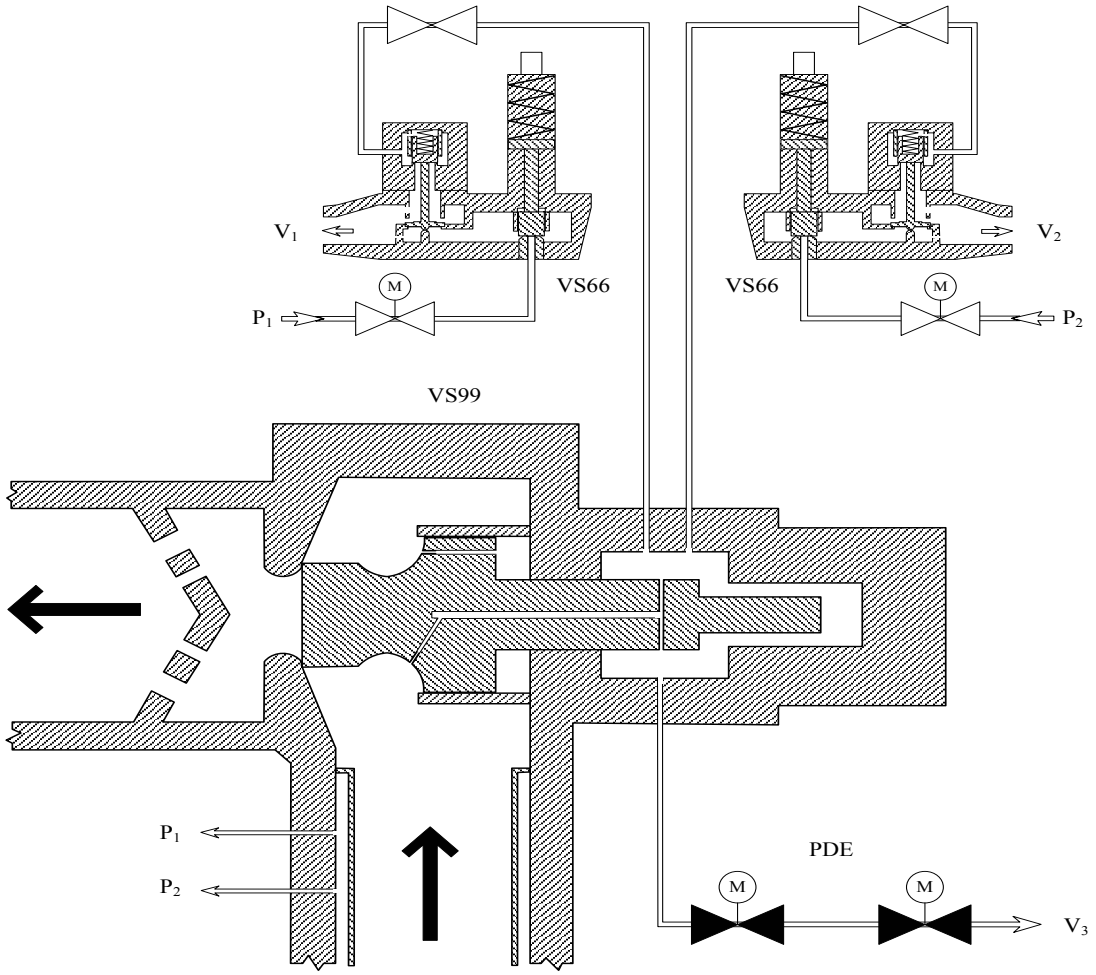

VS99 : Main Valve
VS66 : Spring-Loaded Pilot Valve
PDE : Double Motor-Operated Pilot Valves
M : Motor-Operated Valve
V_i : Pilot Discharge
P_i : Impulse Line

Figure 5.4.14-1 Pilot Operated Safety Relief Valve Schematic Diagram

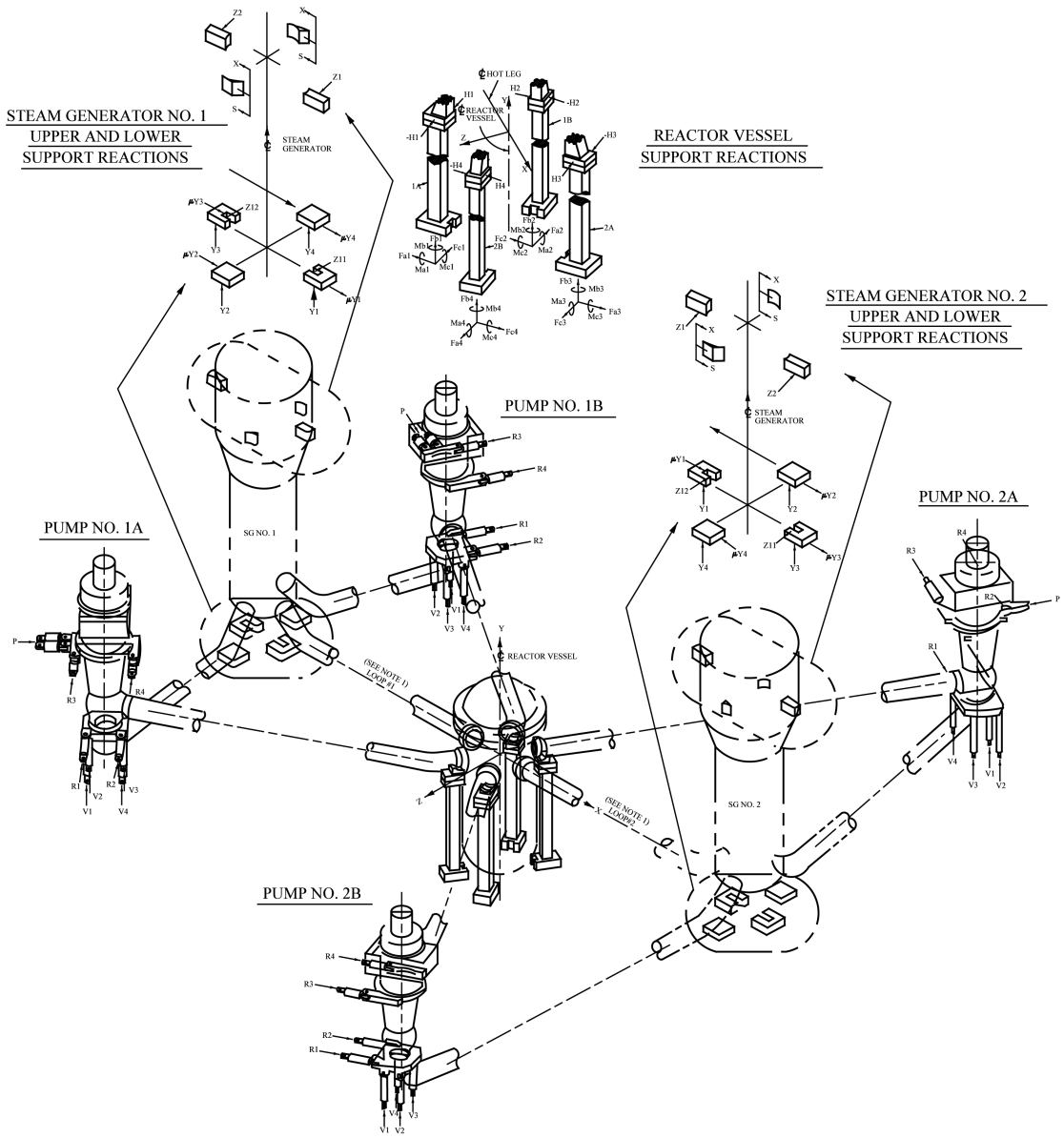

Figure 5.4.15-1 Reactor Coolant System Arrangement and Support Points

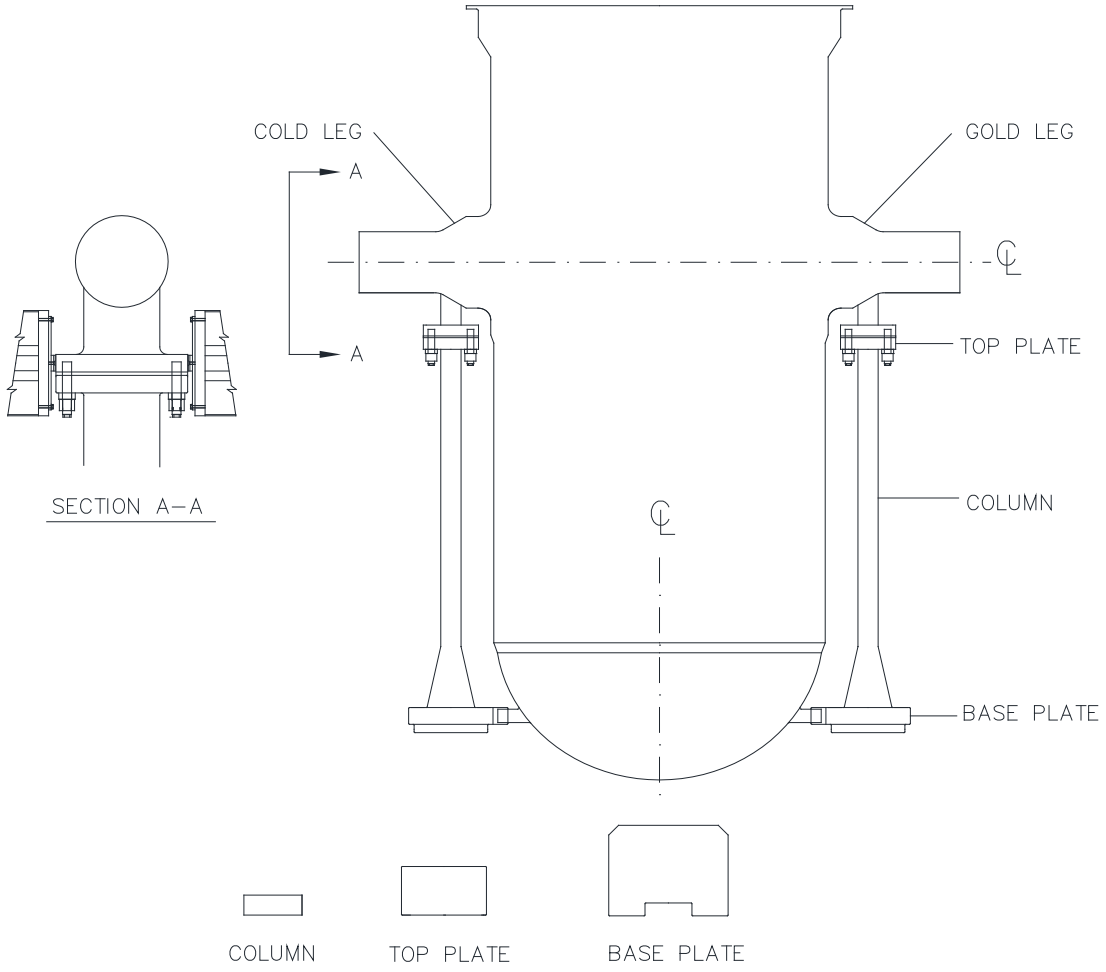

Figure 5.4.15-2 Reactor Vessel Support

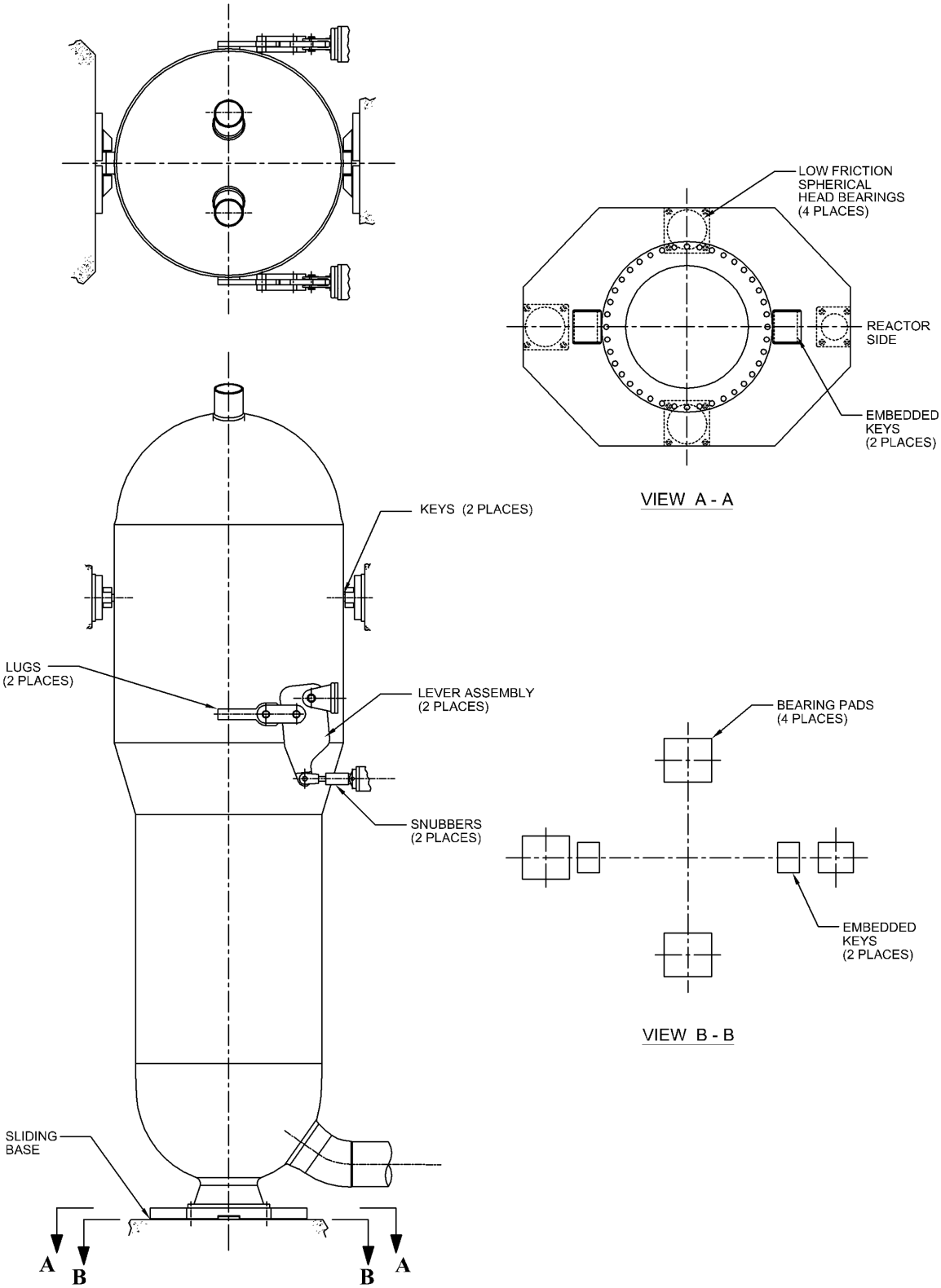

Figure 5.4.15-3 Steam Generator Supports

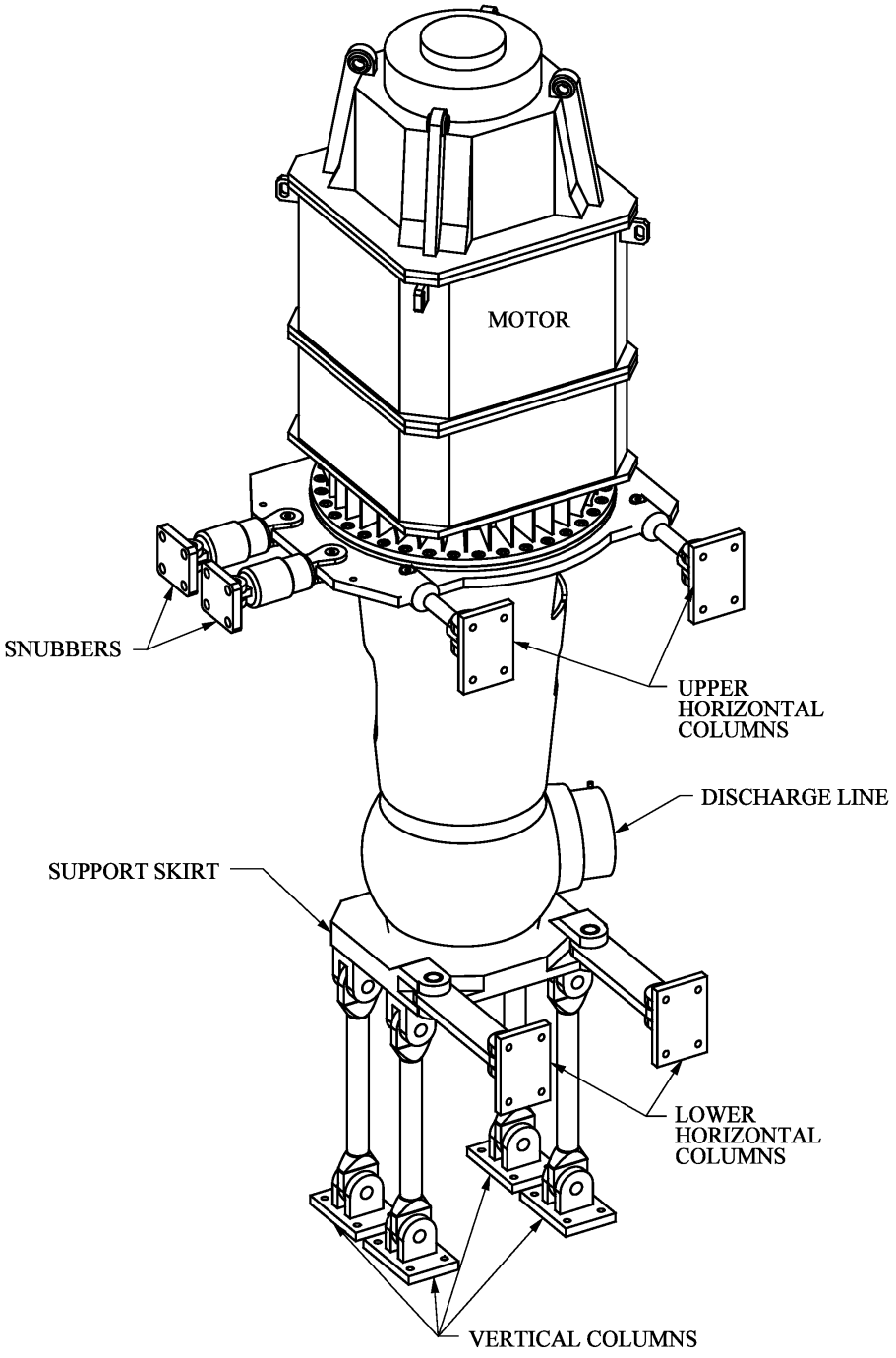

Figure 5.4.15-4 Reactor Coolant Pump Supports

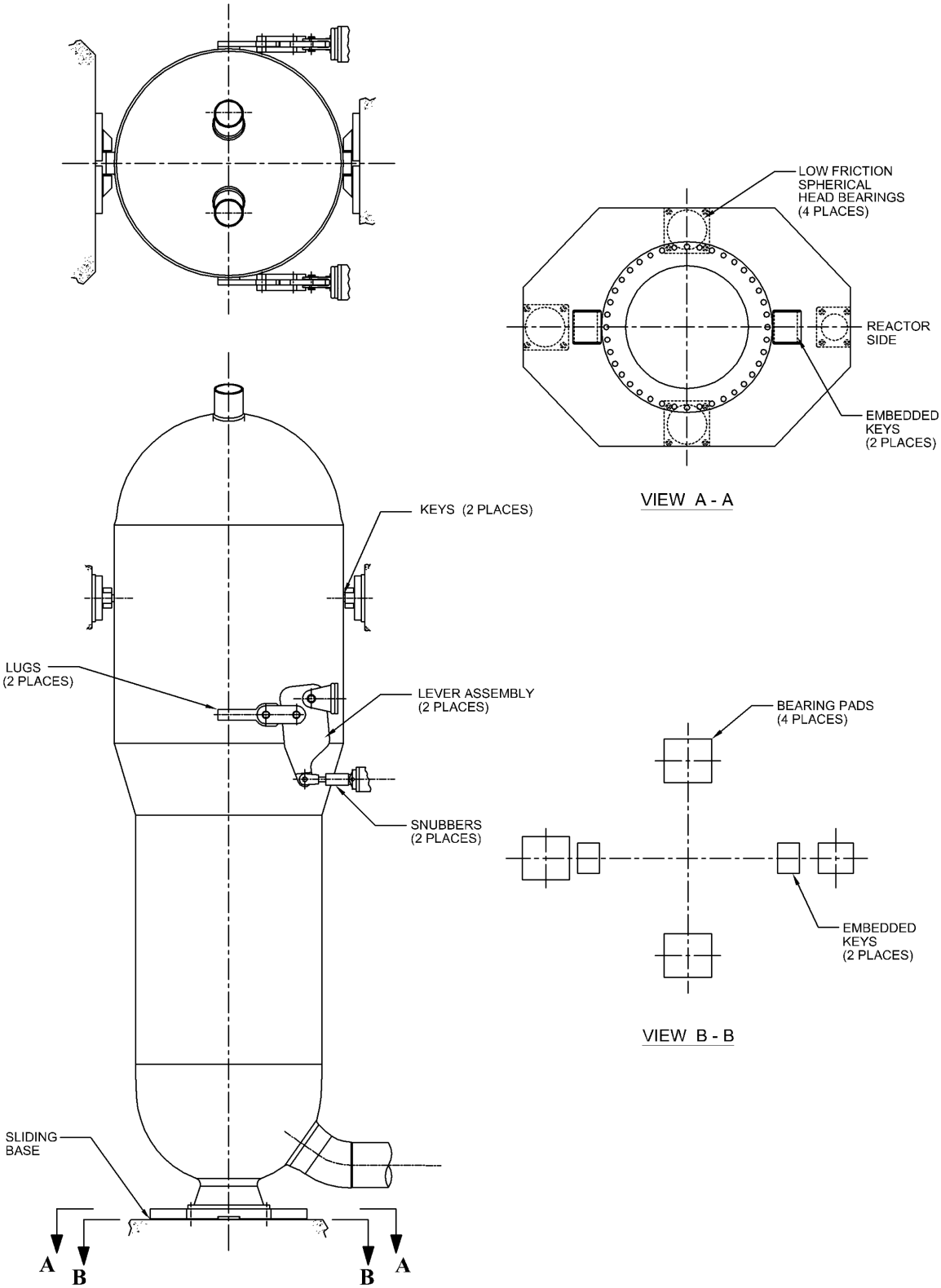

Figure 5.4.15-3 Steam Generator Supports

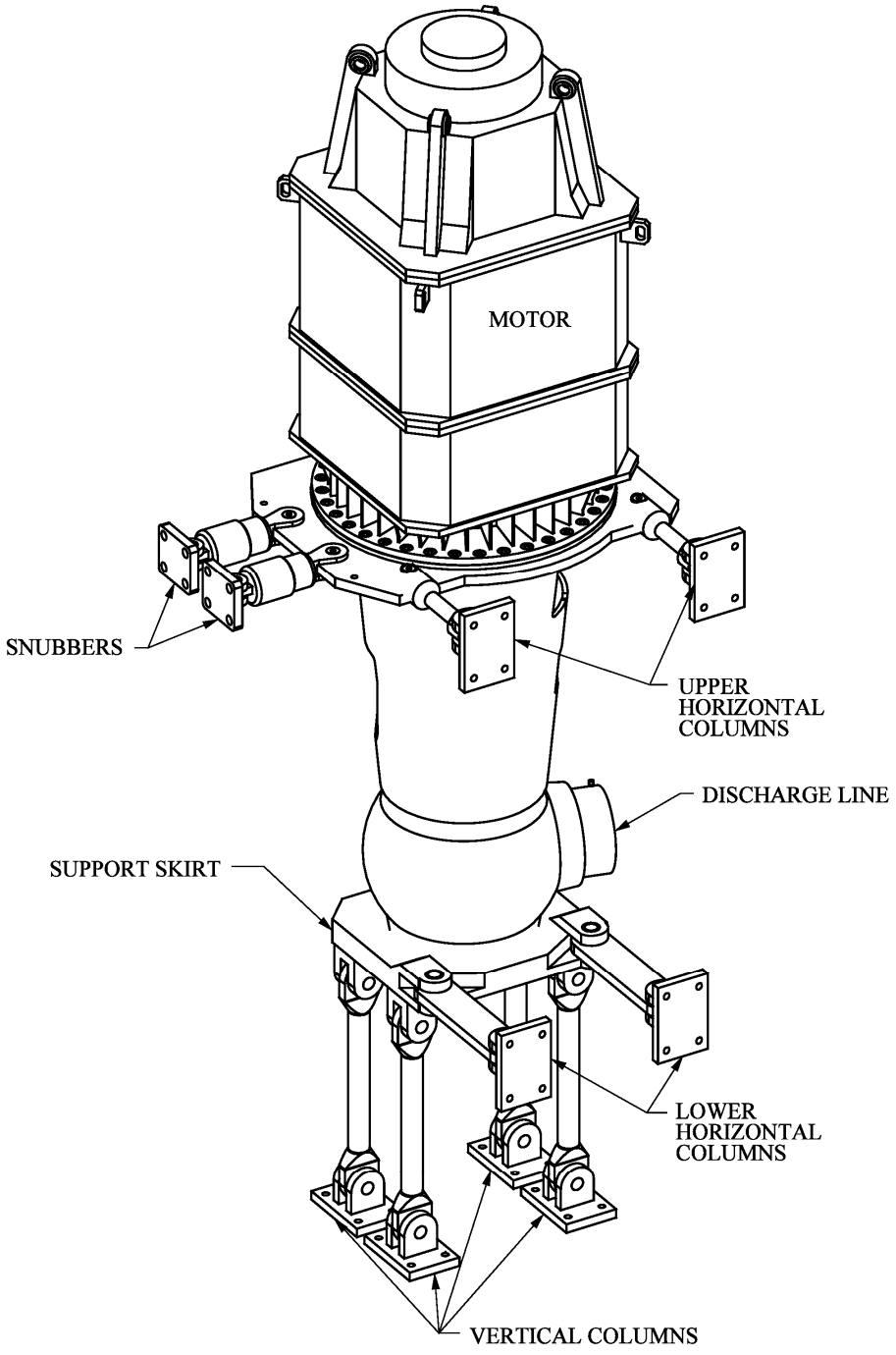

Figure 5.4.15-4 Reactor Coolant Pump Supports