DESIGN CONTROL DOCUMENT FOR THE

US-APWR

Chapter 19

Probabilistic Risk Assessment and Severe Accident Evaluation

MUAP- DC019

REVISION 4

AUGUST 2013

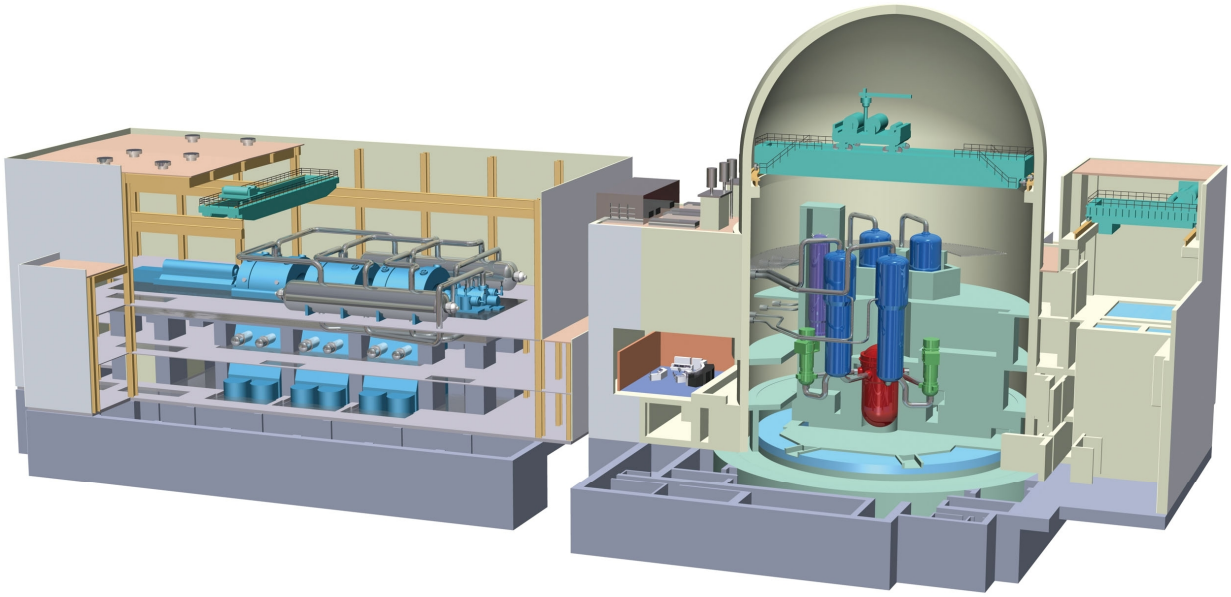

MITSUBISHI HEAVY INDUSTRIES, LTD.

©2013
Mitsubishi Heavy Industries, Ltd.
All Rights Reserved

© 2013

MITSUBISHI HEAVY INDUSTRIES, LTD.

All Rights Reserved

This document has been prepared by Mitsubishi Heavy Industries, Ltd. ("MHI") in connection with the U.S. Nuclear Regulatory Commission's ("NRC") licensing review of MHI's US-APWR nuclear power plant design. No right to disclose, use or copy any of the information in this document, other than by the NRC and its contractors in support of the licensing review of the US-APWR, is authorized without the express written permission of MHI.

This document contains technology information and intellectual property relating to the US-APWR and it is delivered to the NRC on the express condition that it not be disclosed, copied or reproduced in whole or in part, or used for the benefit of anyone other than MHI without the express written permission of MHI, except as set forth in the previous paragraph.

This document is protected by the laws of Japan, U.S. copyright law, international treaties and conventions, and the applicable laws of any country where it is being used.

Mitsubishi Heavy Industries, Ltd.

16-5, Konan 2-chome, Minato-ku

Tokyo 108-8215 Japan

CONTENTS

Page

19.0 PROBABILISTIC RISK ASSESSMENT AND SEVERE ACCIDENT EVALUATION 19.0-1

19.0.1 References 19.0-3

19.1 Probabilistic Risk Assessment 19.1-1

19.1.1 Uses and Applications of the PRA 19.1-2

19.1.1.1 Design Phase 19.1-2

19.1.1.2 Combined License Application Phase 19.1-3

19.1.1.3 Construction Phase 19.1-3

19.1.1.4 Operational Phase 19.1-4

19.1.2 Quality of PRA 19.1-4

19.1.2.1 PRA Scope 19.1-4

19.1.2.2 PRA Level of Detail 19.1-5

19.1.2.3 PRA Technical Adequacy 19.1-5

19.1.2.4 PRA Maintenance And Upgrade 19.1-5

19.1.3 Special Design/Operational Features 19.1-6

19.1.3.1 Design/Operational Features for Preventing Core Damage 19.1-7

19.1.3.2 Design/Operational Features for Mitigating the Consequences of Core Damage and Preventing Releases from Containment 19.1-11

19.1.3.3 Design/Operational Features for Mitigating the Consequences of Releases from Containment 19.1-13

19.1.3.4 Uses of the PRA in the Design Process 19.1-14

19.1.4 Safety Insights from the Internal Events PRA for Operations at Power 19.1-15

19.1.4.1 Level 1 Internal Events PRA for Operations at Power 19.1-15

19.1.4.2 Level 2 Internal Events PRA for Operations at Power 19.1-61

19.1.5 Safety Insights from the External Events PRA for Operations at Power 19.1-80

19.1.5.1 Seismic Risk Evaluation 19.1-81

19.1.5.2 Internal Fires Risk Evaluation 19.1-93

19.1.5.3 Internal Flooding Risk Evaluation 19.1-113

19.1.6 Safety Insights from the PRA for Other Modes of Operation .. 19.1-127

19.1.6.1 Description of the Low-Power and Shutdown Operations PRA 19.1-127

19.1.6.2 Results from the Low-Power and Shutdown Operations PRA 19.1-147

19.1.6.3 Other Risk of the Low-Power and Shutdown Operations PRA 19.1-183

19.1.7 PRA-Related Input to Other Programs and Processes 19.1-190

19.1.7.1 PRA Input to Design Programs and Processes 19.1-190

19.1.7.2 PRA Input to the Maintenance Rule Implementation 19.1-190

19.1.7.3 PRA Input to the Reactor Oversight Process 19.1-190

19.1.7.4 PRA Input to the Reliability Assurance Program 19.1-191

19.1.7.5 PRA Input to the Regulatory Treatment of Non-Safety-Related Systems Program 19.1-191

19.1.7.6 PRA Input to the Technical Specification 19.1-191

19.1.8 Conclusions and Findings 19.1-192

19.1.9 References 19.1-193

19.2 Severe Accident Evaluation 19.2-1

19.2.1 Introduction 19.2-1

19.2.2 Severe Accident Prevention 19.2-1

19.2.2.1 Anticipated Transient Without Scram 19.2-2

19.2.2.2 Mid-Loop Operation 19.2-2

19.2.2.3 Station Black-Out 19.2-2

19.2.2.4 Fire Protection 19.2-2

19.2.2.5 Intersystem Loss-of-Coolant Accident 19.2-2

19.2.2.6 Other Severe Accident Preventive Features 19.2-2

19.2.3 Severe Accident Mitigation 19.2-3
19.2.3.1 Overview of the Containment Design 19.2-3
19.2.3.2 Severe Accident Progression 19.2-3
19.2.3.3 Severe Accident Mitigation Features 19.2-4
19.2.4 Containment Performance Capability 19.2-29
19.2.4.1 Evaluation of the Containment Ultimate Capacity 19.2-29
19.2.4.2 Review of the Containment Performance Goal 19.2-32
19.2.5 Accident Management 19.2-33
19.2.6 Consideration of Potential Design Improvements Under 10 CFR 50.34(f) 19.2-40
19.2.6.1 Introduction 19.2-40
19.2.6.2 Estimate of Risk for Design 19.2-42
19.2.6.3 Identification of Potential Design Improvements 19.2-43
19.2.6.4 Risk Reduction Potential of Design Improvements 19.2-44
19.2.6.5 Cost Impacts of Candidate Design Improvements 19.2-44
19.2.6.6 Cost-Benefit Comparison 19.2-45
19.2.6.7 Conclusions 19.2-45
19.2.7 References 19.2-45
19.3 Open, Confirmatory, and COL Action Items Identified as Unresolved . 19.3-1
19.3.1 Resolution of Open Items 19.3-1
19.3.2 Resolution of Confirmatory Items 19.3-1
19.3.3 Resolution of COL Action Items 19.3-1

TABLES

Page

Table 19.1-1 Uses of PRA in the Design Process 19.1-198

Table 19.1-2 Initiating Events for the US-APWR 19.1-204

Table 19.1-3 Frontline Systems Shared Systems and Components 19.1-205

Table 19.1-4 Dependencies Between Frontline Systems and Supporting Systems 19.1-206

Table 19.1-5 System Dependencies between Supporting Systems and Supporting Systems (ESW, CCW, CWS[S], Power Supply) ... 19.1-207

Table 19.1-6 System Dependencies between Supporting Systems and Supporting Systems (HVAC, Signal) 19.1-208

Table 19.1-7 Dependencies between Initiating Events and Systems 19.1-209

Table 19.1-8 Event Heading ID List 19.1-211

Table 19.1-9 Descriptions of Event Headings and Branches Large Pipe Break LOCA (>8 inches) 19.1-216

Table 19.1-10 Definition of Accident Classes for US-APWR 19.1-236

Table 19.1-11 Systems Included in Systems Analysis for Internal Events 19.1-237

Table 19.1-12 The Relation of Plant Safety Functions and Initiating Events .. 19.1-238

Table 19.1-13 Mitigating systems for Safety Functions in each Initiating Event 19.1-239

Table 19.1-14 Mitigating Systems for Safety Functions in each Alternate Operator Action 19.1-241

Table 19.1-15 Typical Results of Thermal/Hydraulic Analysis 19.1-242

Table 19.1-16 List of Success Criteria Large Pipe Break LOCA (>8 inches) Event Success Criteria 19.1-256

Table 19.1-17 Component Random Failure Database for US-APWR (Mechanical) 19.1-282

Table 19.1-18 Basic HEP Values for Type C Subtask Errors 19.1-285

Table 19.1-19 Recovery Factors 19.1-286

Table 19.1-20 Summary of US-APWR Front Line System Fault Tree Failure Probabilities 19.1-287

Table 19.1-21 Summary of US-APWR Support System Fault Tree Failure Probabilities 19.1-291

Table 19.1-22 Core Damage for At-Power Events Contribution of Initiating Events to Plant Core Damage Frequency 19.1-294

Table 19.1-23 Core Damage for At-Power Events – Conditional Core Damage Probability Given Initiating Event Occurrence 19.1-295

Table 19.1-24 US-APWR PRA Dominant Core Damage Frequency Sequence 19.1-296

Table 19.1-25 US-APWR PRA Dominant Cutsets 19.1-302

Table 19.1-26 US-APWR PRA Dominant Cutsets for Each Initiating Event Large Pipe Break LOCA 19.1-311

Table 19.1-27 LOOP with Reactor Trip Resulting SBO Sequence Dominant Cutsets 19.1-350

Table 19.1-28 LOCCW with Reactor Trip Sequence Dominant Cutsets 19.1-357

Table 19.1-29 LOOP with Reactor Trip Resulting LOCCW Sequence Dominant Cutsets 19.1-360

Table 19.1-30 Basic Events (Hardware Failure, Human Error) FV Importance 19.1-365

Table 19.1-31 Basic Events (Hardware Failure, Human Error) RAW 19.1-368

Table 19.1-32 Common Cause Failure FV Importance 19.1-413

Table 19.1-33 Common Cause Failure RAW 19.1-414

Table 19.1-34 Human Error FV Importance 19.1-415

Table 19.1-35 Human Error RAW 19.1-416

Table 19.1-36 Hardware Single Failure FV Importance 19.1-417

Table 19.1-37 Hardware Single Failure RAW 19.1-418

Table 19.1-38 Key Sources of Uncertainty and Key Assumptions (Level 1 PRA for Internal Events at Power) 19.1-419

Table 19.1-39 Definition of Plant Damage States 19.1-428

Table 19.1-40 Definition of CSET Top Events 19.1-429

Table 19.1-41 Dependencies between Frontline Systems and Supporting Systems of the CSET 19.1-432

Table 19.1-42 Dominant Cutsets of LRF 19.1-433

Table 19.1-43 Contribution of Initiating Events to LRF 19.1-443

Table 19.1-44 Basic Events (Hardware Failure, Human Error) FV Importance for LRF 19.1-444

Table 19.1-45 Basic Events (Hardware Failure, Human Error) RAW for LRF 19.1-451

Table 19.1-46 Common Cause Failure FV Importance for LRF 19.1-511

Table 19.1-47 Common Cause Failure RAW for LRF 19.1-512

Table 19.1-48 Human Error FV Importance for LRF..... 19.1-513

Table 19.1-49 Human Error RAW for LRF..... 19.1-514

Table 19.1-50 Hardware Single Failure FV Importance for LRF..... 19.1-515

Table 19.1-51 Hardware Single Failure RAW for LRF..... 19.1-516

Table 19.1-52 Dominant Plant Damage States of LRF 19.1-517

Table 19.1-53 Key Sources of Uncertainty and Key Assumptions (Level 2 PRA for Internal Events at Power)..... 19.1-518

Table 19.1-54 HCLPF Values of Structures and Categories of Components 19.1-519

Table 19.1-55 HCLPFs for Basic Events 19.1-525

Table 19.1-56 HCLPFs for Sequences and the Plant HCLPF 19.1-538

Table 19.1-57 Initiating Events Included/Excluded in the Internal Fire PRA .. 19.1-539

Table 19.1-58 Fire Compartment Evaluation 19.1-540

Table 19.1-59 Screened Multiple Compartment Scenarios 19.1-541

Table 19.1-60 Cutsets for Dominant Scenarios (YARD)..... 19.1-542

Table 19.1-61 Cutsets for Dominant Scenarios for LRF (FA6-101-01)..... 19.1-556

Table 19.1-62 Basic Events (Hardware Failure, Human Error) FV Importance for Fire..... 19.1-571

Table 19.1-63 Basic Events (Hardware Failure, Human Error) RAW for Fire. 19.1-581

Table 19.1-64 Common Cause Failure FV Importance for Fire..... 19.1-637

Table 19.1-65 Common Cause Failure RAW for Fire 19.1-638

Table 19.1-66 Human Error FV Importance for Fire 19.1-639

Table 19.1-67 Human Error RAW for Fire 19.1-640

Table 19.1-68 Hardware Single Failure FV Importance for Fire 19.1-641

Table 19.1-69 Hardware Single Failure RAW for Fire 19.1-642

Table 19.1-70 Internal Flood PRA Dominant Cutsets..... 19.1-643

Table 19.1-71 Basic Events (Hardware Failure and Human Error) FV Importance for Flood 19.1-713

Table 19.1-72 Basic Events (Hardware Failure, Human Error) RAW for Flood 19.1-717

Table 19.1-73 Common Cause Failure FV Importance for Flood..... 19.1-778

Table 19.1-74 Common Cause Failure RAW for Flood 19.1-779

Table 19.1-75 Human Error FV Importance for Flood 19.1-780

Table 19.1-76 Human Error RAW for Flood 19.1-781

Table 19.1-77 Hardware Single Failure FV Importance for Flood 19.1-782

Table 19.1-78 Hardware Single Failure RAW for Flood..... 19.1-783

Table 19.1-79 Deleted 19.1-784

Table 19.1-80 Deleted 19.1-785

Table 19.1-81 Disposition of Plant Operating States for LPSD PRA 19.1-786

Table 19.1-82 Duration Time of Each POS for LPSD PRA 19.1-788

Table 19.1-83 Planned Maintenance Schedule for LPSD PRA..... 19.1-789

Table 19.1-84 Deleted 19.1-790

Table 19.1-85 Success Criteria of POS 8-1 for LPSD PRA (Example) 19.1-791

Table 19.1-86 Summary of Front-line System Failure Probabilities for LPSD PRA..... 19.1-795

Table 19.1-87 Summary of Support System Failure Probabilities for LPSD PRA..... 19.1-797

Table 19.1-88 Frequency of Initiating Events for LPSD PRA 19.1-804

Table 19.1-89 Core Damage Frequency for LPSD PRA 19.1-805

Table 19.1-90 Dominant Sequences of POS 8-1 for LPSD PRA 19.1-806

Table 19.1-91 Dominant Cutsets of POS 8-1 for LPSD PRA 19.1-807

Table 19.1-92 Planned Maintenance Schedule for Sensitivity Case 3 ..... 19.1-817

Table 19.1-93 Basic Events (Hardware Failure, Human Error) FV Importance of POS 8-1 for LPSD PRA 19.1-818

Table 19.1-94 Basic Events (Hardware Failure, Human Error) RAW of POS 8-1 for LPSD PRA 19.1-821

Table 19.1-95 Common Cause Failure FV Importance of POS 8-1 for LPSD PRA 19.1-882

Table 19.1-96 Common Cause Failure RAW of POS 8-1 for LPSD PRA..... 19.1-883

Table 19.1-97 Human Error FV Importance of POS 8-1 for LPSD PRA..... 19.1-884

Table 19.1-98 Human Error RAW of POS 8-1 for LPSD PRA 19.1-885

Table 19.1-99 Hardware Single Failure FV Importance of POS 8-1 for LPSD PRA 19.1-886

Table 19.1-100 Hardware Single Failure RAW of POS 8-1 for LPSD PRA..... 19.1-887

Table 19.1-101 Important Operator Actions in POS 4-3 ..... 19.1-888

Table 19.1-102 Important Operator Actions in POS 8-1 ..... 19.1-889

Table 19.1-103 Postulated Important Operator Actions in POS 3 ..... 19.1-890

Table 19.1-104 Postulated Important Operator Actions in POS 4-1 ..... 19.1-891

Table 19.1-105 Postulated Important Operator Actions in POS 4-2 ..... 19.1-892

Table 19.1-106 Postulated Important Operator Actions in POS 8-2 ..... 19.1-893

Table 19.1-107 Postulated Important Operator Actions in POS 8-3 ..... 19.1-894

Table 19.1-108 Postulated Important Operator Actions in POS 9 ..... 19.1-895

Table 19.1-109 Postulated Important Operator Actions in POS 11 ..... 19.1-896

Table 19.1-110 Important SSCs of each System in POS 4-3 ..... 19.1-897

Table 19.1-111 Important SSCs of each System in POS 8-1 ..... 19.1-899

Table 19.1-112 Postulated Important SSCs in POS 3 ..... 19.1-901

Table 19.1-113 Postulated Important SSCs in POS 4-1 ..... 19.1-902

Table 19.1-114 Postulated Important SSCs in POS 4-2 ..... 19.1-903

Table 19.1-115 Postulated Important SSCs in POS 8-2 ..... 19.1-904

Table 19.1-116 Postulated Important SSCs in POS 8-3 ..... 19.1-905

Table 19.1-117 Postulated Important SSCs in POS 9 ..... 19.1-906

Table 19.1-118 Posulated Important SSCs in POS 11 ..... 19.1-907

Table 19.1-119 Key Insights and Assumptions 19.1-908

Table 19.1-120 Initiating Events and Mitigation Systems during LPSD 19.1-958

Table 19.1-121 Core Damage Frequency of Each Initiating Event and Each POS of Internal Fire at LPSD 19.1-959

Table 19.1-122 Dominant Scenarios of Internal Fire at LPSD (POS 8-1)..... 19.1-960

Table 19.1-123 Dominant Cutsets of Internal Fire at LPSD (POS 8-1) 19.1-962

Table 19.1-124 Basic Events (Hardware and Human Error) FV Importance of Internal Fire at LPSD (POS8-1) 19.1-965

Table 19.1-125 Basic Events (Hardware and Human Error) RAW of Internal Fire at LPSD (POS8-1)..... 19.1-966

Table 19.1-126 Core Damage Frequency of Each Initiating Event and Each POS of Internal Flood at LPSD 19.1-967

Table 19.1-127 Dominant Scenarios of Internal Flood at LPSD (POS 8-1)..... 19.1-968

Table 19.1-128 Dominant Cutsets of Internal Flood at LPSD (POS 8-1)..... 19.1-973

Table 19.1-129 Basic Events (Hardware and Human Error) FV Importance of Internal Flood at LPSD (POS8-1)..... 19.1-978

Table 19.1-130 Basic Events (Hardware and Human Error) RAW of Internal Flood at LPSD (POS8-1) 19.1-979

Table 19.1-131 LOCCW with Reactor Trip Resulting Loss of Decay Heat via SGs Sequence Dominant Cutsets..... 19.1-980

Table 19.1-132 SLOCA with Reactor Trip Resulting Loss of Core Cooling Sequence Dominant Cutsets 19.1-984

Table 19.1-133 LOFF with Reactor Trip Resulting Failure of RCS Depressurization Sequence Dominant Cutsets 19.1-987

Table 19.1-134 SLBO with Reactor Trip Resulting Failure of Main Steam Line Isolation Sequence Dominant Cutsets..... 19.1-992

Table 19.1-135 ATWS without Turbine Trip Sequence Dominant Cutsets..... 19.1-995

Table 19.1-136 TRANS with Reactor Trip Resulting Failure of RCS Depressurization Sequence Dominant Cutsets 19.1-999

Table 19.1-137 SLOCA with Reactor Trip Resulting Failure of RCS Deprssurization Sequence Dominant Cutsets 19.1-1004

Table 19.1-138 ATWS without Loss of Decay Heat via SGs Sequence Dominant Cutsets 19.1-1007

Table 19.1-139 LOOP with Reactor Trip Failure of RCS Depressurization Sequence Dominant Cutsets 19.1-1010

Table 19.1-140 Impact on PRA Associated with Key Sources of Uncertainty and Key Assumptions (Level 1 PRA for Internal Events at Power) 19.1-1015

Table 19.1-141 Summary of Plant Configuration and Operator Activities during Mid-loop Operation 19.1-1018

Table 19.1-142 Success Criteria of POS 4-3 for LPSD PRA (Example) 19.1-1022

Table 19.1-143 Dominant Sequences of POS 4-3 for LPSD PRA 19.1-1026

Table 19.1-144 Dominant Cutsets of POS 4-3 for LPSD PRA 19.1-1027

Table 19.1-145 LOOP with Success of ac Power Supply Sequence Dominant Cutsets of POS 4-3 for LPSD PRA 19.1-1037

Table 19.1-146 LOOP Resulting SBO Sequence Dominant Cutsets of POS 4-3 for LPSD PRA 19.1-1040

Table 19.1-147 LOCA with No Mitigation System Sequence Dominant Cutsets of POS 4-3 for LPSD PRA 19.1-1042

Table 19.1-148 FLML Resulting Failure of RCS Makeup Sequence Dominant Cutsets of POS 4-3 for LPSD PRA 19.1-1046

Table 19.1-149 LOCA Resulting Isolation Failure Sequence Dominant Cutsets of POS 4-3 for LPSD PRA 19.1-1050

Table 19.1-150 LORH with No Mitigation System Sequence Dominant Cutsets of POS 4-3 for LPSD PRA 19.1-1052

Table 19.1-151 LOOP Resulting Loss of CCW Sequence Dominant Cutsets of POS 4-3 for LPSD PRA 19.1-1055

Table 19.1-152 LOOP Resulting Loss of ac Power Sequence Dominant Cutsets of POS 4-3 for LPSD PRA 19.1-1057

Table 19.1-153 LOCS Resulting No Mitigation System Sequence Dominant Cutsets of POS 4-3 for LPSD PRA 19.1-1061

Table 19.1-154 LOCA Resulting Failure of RCS Makeup Sequence Dominant Cutsets of POS 4-3 for LPSD PRA 19.1-1062

Table 19.1-155 LOCA Resulting Failure of RCS Makeup Sequence Dominant Cutsets of POS 8-1 for LPSD PRA 19.1-1065

Table 19.1-156 LOOP with Success of ac Power Supply Sequence Dominant Cutsets of POS 8-1 for LPSD PRA 19.1-1068

Table 19.1-157 LOOP Resulting SBO Sequence Dominant Cutsets of POS 8-1 for LPSD PRA..... 19.1-1071

Table 19.1-158 LOCS Resulting No Mitigation System Sequence Dominant Cutsets of POS 8-1 for LPSD PRA 19.1-1073

Table 19.1-159 LOCA with Mitigation System Sequence Dominant Cutsets of POS 8-1 for LPSD PRA..... 19.1-1074

Table 19.1-160 LOOP Resulting Loss of CCW Sequence Dominant Cutsets of POS 8-1 for LPSD PRA..... 19.1-1077

Table 19.1-161 LOCA Resulting Isolation Failure Sequence Dominant Cutsets of POS 8-1 for LPSD PRA..... 19.1-1079

Table 19.1-162 LORH with No Mitigation System Sequence Dominant Cutsets of POS 8-1 for LPSD PRA..... 19.1-1082

Table 19.1-163 OVDR Resulting Failure of RCS Makeup Sequence Dominant Cutsets of POS 8-1 for LPSD PRA 19.1-1085

Table 19.1-164 Basic Events (Hardware Failure, Human Error) FV Importance of POS 4-3 for LPSD PRA 19.1-1088

Table 19.1-165 Basic Events (Hardware Failure, Human Error) RAW of POS 4-3 for LPSD PRA 19.1-1090

Table 19.1-166 Common Cause Failure FV Importance of POS 4-3 for LPSD PRA..... 19.1-1152

Table 19.1-167 Common Cause Failure RAW of POS 4-3 for LPSD PRA..... 19.1-1153

Table 19.1-168 Human Error FV Importance of POS 4-3 for LPSD PRA..... 19.1-1154

Table 19.1-169 Human Error RAW of POS 4-3 for LPSD PRA..... 19.1-1155

Table 19.1-170 Hardware Single Failure FV Importance of POS 4-3 for LPSD PRA..... 19.1-1156

Table 19.1-171 Hardware Single Failure RAW of POS 4-3 for LPSD PRA.... 19.1-1157

Table 19.1-172 Definition of Release Categories 19.1-1158

Table 19.1-173 Summary of Frequency of Release Categories..... 19.1-1159

Table 19.1-174 Summary of Release Fractions 19.1-1160

Table 19.1-175 Summary of Frequency of Release Categories for Fire 19.1-1161

Table 19.1-176 Correspondence between Accident Sequence and Internal Fire Events Release Categories 19.1-1162

Table 19.1-177 Summary of Frequency of Release Categories for Flood..... 19.1-1163

Table 19.1-178 Summary of Release Fractions for Flood 19.1-1164

Table 19.1-179 Summary of Release Fractions for LPSD..... 19.1-1165

Table 19.1-180 Room Temperature Analysis Results for Each Area 19.1-1166

Table 19.1-181 Key Sources of Uncertainty and Key Assumptions (LPSD Operation) 19.1-1167

Table 19.2-1 Design Features for the US-APWR and Severe Accident Phenomena 19.2-52

Table 19.2-2 Summary of Relevant Studies and Experiments on Hydrogen Generation and Control..... 19.2-54

Table 19.2-3 Summary of Relevant Studies and Experiments on Core Debris Coolability 19.2-55

Table 19.2-4 Summary of Relevant Studies and Experiments on High Pressure Melt Ejection 19.2-56

Table 19.2-5 Summary of Relevant Studies and Experiments on Fuel-Coolant Interaction 19.2-57

Table 19.2-6 Summary of Relevant Studies and Experiments on Containment Bypass 19.2-58

Table 19.2-7 Summary of Relevant Studies and Experiments on Equipment Survivability 19.2-59

Table 19.2-8 Summary of Relevant Studies and Experiments on Long-Term Containment Overpressure 19.2-60

Table 19.2-9 SAMDA Benefit Sensitivity Analyses 19.2-61

Table 19.2-10 Equipment and Instruments Used in Severe Accident Management..... 19.2-62

FIGURES

Page

Figure 19.1-1 Event Tree (Sheet 1 of 19) (Large LOCA) 19.1-1173

Figure 19.1-2 Simplified System Diagram (Reactor Coolant System) 19.1-1192

Figure 19.1-3 Decision Tree to Determine the Dependency Level between Multiple Human Failure Events 19.1-1234

Figure 19.1-4 Internal Events Core Damage Frequency Contribution at Power 19.1-1235

Figure 19.1-5 Result of Uncertainty Quantification for Internal Events at Power 19.1-1236

Figure 19.1-6 Logic Tree for ACL Classification 19.1-1237

Figure 19.1-7 CET Development Methodology 19.1-1238

Figure 19.1-8 Containment System Event Tree (Example) 19.1-1239

Figure 19.1-9 Containment Phenomenological Event Tree 19.1-1240

Figure 19.1-10 Contribution of Initiating Events to LRF 19.1-1241

Figure 19.1-11 Result of Parametric Uncertainty for LRF 19.1-1242

Figure 19.1-12 Outline for the PRA Based Seismic Margin Analysis..... 19.1-1243

Figure 19.1-13 Feature of RCS Condition (POS 4-1 and POS 8-3)..... 19.1-1244

Figure 19.1-14 Feature of RCS Condition (POS 4-2 and POS 8-2)..... 19.1-1245

Figure 19.1-15 Feature of RCS Condition (POS 4-3 and POS 8-1)..... 19.1-1246

Figure 19.1-16 Loss of Coolant Accident Event Tree 19.1-1247

Figure 19.1-17 Loss of RHR caused by Over-drain Event Tree 19.1-1248

Figure 19.1-18 Loss of RHRS caused by Other Failures Event Tree 19.1-1249

Figure 19.1-19 Loss of CCW/Essential Service Water Event Tree..... 19.1-1250

Figure 19.1-20 Loss of Offsite Power Event Tree 19.1-1251

Figure 19.1-21 Result of Uncertainty Quantification for LPSD PRA 19.1-1252

Figure 19.1-22 Loss of RHRS caused by Seismic Event Tree 19.1-1254

Figure 19.1-23 Schematic Image of RCS Inventory with Key Activities..... 19.1-1255

Figure 19.1-24 Loss of RHR caused by Failing to Maintain Water Level Event Tree 19.1-1256

Figure 19.1-25 Internal Events Core Damage Frequency Contribution for LPSD PRA (Sheet 1 of 3)19.1-1257

Figure 19.1-26 Logic Tree for Defining Release Categories..... 19.1-1260

Figure 19.1-27 Contribution of Release Categories..... 19.1-1261

Figure 19.2-1 Schematic Diagram of the US-APWR Severe Accident Mitigation Features19.2-64

ACRONYMS AND ABBREVIATIONS

A/B	auxiliary building
AAC	alternate alternating current
ac	alternating current
ACL	accident class
ANL	Argonne National Laboratory
ANS	American Nuclear Society
ANSI	American National Standards Institute
AOP	abnormal operating procedure
ASEP	accident sequence evaluation program
ASME	American Society of Mechanical Engineers
ATWS	anticipated transient without scram
BHEP	basic human error probability
BNL	Brookhaven National Laboratory
BO	blackout
C/V	containment vessel
CCDP	conditional core damage probability
CCF	common cause failure
CCFP	conditional containment failure probability
CCW	component cooling water
CCWS	component cooling water system
CD	complete dependence
CDF	core damage frequency
CET	containment event tree
CFR	Code of Federal Regulations
CHP	charging pump
CI	containment isolation
COL	Combined License
COLA	Combined License Application
CPET	containment phenomenological event tree
CRDM	control rod drive mechanism
CRMP	configuration risk management program
CS	containment spray
CS/RHR	containment spray/residual heat removal
CSDRS	certified seismic design response spectra
CSET	containment system event tree
CSNI	Committee on the Safety of Nuclear Installations
CSS	containment spray system

CT	completion time
CVCS	chemical and volume control system
DAS	diverse actuation system
dc	direct current
DCD	Design Control Document
DCH	direct containment heating
DDT	deflagration to detonation transition
DVI	direct vessel injection
ECCS	emergency core cooling system
ECOM	error of commission
EF	error factor
EFW	emergency feedwater
EFWS	emergency feedwater system
EOM	error of omission
EOP	emergency operating procedure
EPRI	Electric Power Research Institute
ESF	engineered safety features
ESFAS	engineered safety features actuation system
ESWS	essential service water system
ESX	ex-vessel steam explosion
ET	event tree
FAB	feed and bleed
FLML	failure to maintain water level
FMEA	failure modes and effects analysis
FP	fission product
FSAR	Final Safety Analysis Report
FSS	fire protection water supply system
FT	fault tree
FV	Fussell Vesely
FWLB	feed-water line break
FWS	feedwater system
GMRS	ground motion response spectra
GTG	gas turbine generator
HCLPF	high confidence of low probability of failure
HD	high dependence
HE	human error
HELB	high-energy line breaks
HEP	human error probability
HHI	high head injection

HHIS	high head injection system
HPME	high pressure melt ejection
HRA	human reliability analysis
HSI	human-system interface
HVAC	heating, ventilation, and air conditioning
HX	heat exchanger
I&C	instrumentation and control
ICDP	incremental core damage probability
ICIS	in-core instrumentation system
IE	initiating event
IEEE	institute of electrical and electronic engineers
IFPRA	Internal flood probabilistic risk assessment
IHL	induced hot leg rupture
IST	inservice testing
ITAAC	inspection, test, analysis, and acceptance criteria
JAERI	Japan Atomic Energy Research Institute
JNES	Japan Nuclear Energy Safety Organization
JRC	Joint research Centre
KZK	Kernforschungszentrum Karlsruhe
LD	low dependence
LERF	large early release frequency
LHSI	low-head safety injection
LOCA	loss-of-coolant accident
LPSD	low-power and shutdown
LRF	large release frequency
LTOP	low temperature overpressure
M/D	motor driven
MAAP	modular accident analysis program
MCCI	molten core concrete interaction
MCP	main coolant piping
MCR	main control room
MELB	moderate-energy line break
MSDV	main steam depressurization valve
MSIV	main steam isolation valve
MSRV	main steam relief valve
NEI	Nuclear Energy Institute
NFPA	National Fire Protection Association
NRC	U.S. Nuclear Regulatory Commission
NUREG	NRC Technical Report Designation (Nuclear Regulatory Commission)

OECD	Organization for Economic Cooperation and Development
PCCV	prestressed concrete containment vessel
PCMS	plant control and monitoring system
PCT	peak cladding temperature
PDS	plant damage state
PGA	peak ground acceleration
POS	plant operational state
PRA	probabilistic risk assessment
PRSV	pressurizer safety valve
PS/B	power source building
PSMS	protection and safety monitoring system
PSF	performance shaping factor
PWR	pressurized-water reactor
R/B	reactor building
RAP	reliability assurance program
RAW	risk achievement worth
RCS	reactor coolant system
RCP	reactor coolant pump
RF	recovery factors
RG	Regulatory Guide
RHR	residual heat removal
RHRS	residual heat removal system
RICT	risk-informed completion time
RLE	review level earthquake
RMAT	risk management action time
RMTS	risk-managed technical specifications
RO	reactor operator
RPS	reactor protection system
RRS	required response spectra
RTNSS	regulatory treatment of non-safety-related systems
RV	reactor vessel
RWR	refueling water recirculation
RWSAT	refueling water storage auxiliary tank
RWSP	refueling water storage pit
RY	reactor-year
SAMDA	severe accident mitigation design alternative
SAMG	severe accident management guideline
SBO	station blackout
SDV	safety depressurization valve

SEL	seismic equipment list
SFCP	surveillance frequency control program
SFP	spent fuel pit
SG	steam generator
SI	safety injection
SIS	safety injection system
SLB	steam line break/leak
SLS	safety logic system
SMA	seismic margin analysis
SRO	senior reactor operator
SRP	Standard Review Plan
SSC	structure, system, and component
SSE	safe-shutdown earthquake
STA	shift technical advisor
T/B	turbine building
T/D	turbine driven
TEDE	total effective dose equivalent
THERP	technique for human error rate prediction
TI-SGTR	temperature induced steam generator tube rupture
TS	technical specifications
VCT	volume control tank
VDU	visual display unit
ZD	zero dependence

19.0 PROBABILISTIC RISK ASSESSMENT AND SEVERE ACCIDENT EVALUATION

The US-APWR probabilistic risk assessment (PRA) has been developed in accordance with Title 10, Code of Federal Regulations (CFR), Part 52.47 (a) (Reference 19.0-1). The primary purposes of the US-APWR PRA and severe accident evaluations are as follows:

- To describe the design-specific PRA (10 CFR 52.47(a)(27) [Reference 19.0-1])
- To describe and analyze design features for the prevention and mitigation of severe accidents, e.g., challenges to containment integrity caused by core-concrete interaction, steam explosion, high-pressure core melt ejection, hydrogen combustion, and containment bypass(10 CFR 52.47(a)(23) [Reference 19.0-1])

The primary objectives of the US-APWR PRA and severe accident evaluations are as follows:

- To identify and address potential design and operational vulnerabilities (i.e., failures or combinations of failures that are significant risk contributors that could drive the risk to unacceptable levels with respect to the U.S. Nuclear Regulatory Commission [NRC] goals)
- To reduce or eliminate known weaknesses of existing operating plants that are applicable to the new design, by introducing appropriate features and requirements
- To select among alternative features, operational strategies, and design options
- To develop an in-depth understanding of the design's robustness and tolerance of severe accidents initiated by either internal or external events
- To examine the risk-significance of specific human errors associated with the design, and characterize the significant human errors in preparation for better training and more refined procedures
- To determine how the risk associated with the design compares against the NRC goals of less than 1E-04/year for core damage frequency (CDF) and less than 1E-06/year for large release frequency (LRF)
- To determine containment performance against the NRC containment performance goal, which includes a deterministic goal that containment integrity be maintained for approximately 24 hours following the onset of core damage for the more likely severe accident challenges and a probabilistic goal that the conditional containment failure probability (CCFP) be less than approximately 0.1 for the composite of core damage sequences assessed in the PRA
- To assess the balance of preventive and mitigate features of the design, including consistency with guidance in SECY-93-087 (Reference 19.0-2) and the associated staff requirements memoranda

- To demonstrate whether the plant design represents a reduction in risk compared to existing operating plants
- To demonstrate that the design addresses known issues related to the reliability of core and containment heat removal systems at some operating plants
- To support regulatory oversight processes and programs that will be associated with plant operations (e.g., technical specifications, reliability assurance, human factors, maintenance rule, regulatory treatment of non-safety-related systems [RTNSS])
- To identify and support the development of design requirements, such as inspections, tests, analysis, and acceptance criteria (ITAACs), reliability assurance program (RAP), technical specifications, and Combined License (COL) action items and interface requirements.

This chapter is structured in the following manner:

- PRA results and insights including internal and external event evaluation during full-power operations and during low power and shutdown operations (Section 19.1). External events evaluated include seismic, internal fire, and internal flood. Level 1 and Level 2 results are reported. This section also discusses the uses and applications of the PRA, PRA quality, design, and operational features that are intended to improve plant safety, and PRA input to design programs and processes.
- Severe accident evaluations including an assessment of preventive and mitigate features (Section 19.2). This section also discusses containment performance capability, accident management, and considerations of potential design improvements under 10 CFR 50.34 (f) (Reference 19.0-3).
- A description of open items, confirmatory items, and COL items (Section 19.3).

The PRA results indicate the US-APWR design meets the US-APWR and NRC safety goals. The quality and level of detail of the PRA is sufficient to provide confidence in the results such that the PRA may be used in regulatory decision-making to support risk-informed applications.

The primary requirements, guidance, policies, and standards utilized to complete the PRA and severe accident evaluations are as follows:

- 10 CFR 52.47 (Reference 19.0-1)
- 10 CFR 50.34 (Reference 19.0-3)
- NRC Policy Statement 50 FR 32138 (Reference 19.0-4)
- NRC Policy Statement 51 FR 28044 (Reference 19.0-5)
- NRC Policy Statement 52 FR 34884 (Reference 19.0-6)

- NRC Policy Statement 59 FR 35461 (Reference 19.0-7)
- NRC Policy Statement 60 FR 42622 (Reference 19.0-8)
- Regulatory Guide (RG) 1.200 (Reference 19.0-9)
- RG 1.206 (Reference 19.0-10)
- SECY-90-016 (Reference 19.0-11)
- SECY-93-087 (Reference 19.0-2)
- SECY-06-0220 (Reference 19.0-12)
- NUREG-0800 (Reference 19.0-13)
- American Society of Mechanical Engineers (ASME)/American Nuclear Society (ANS) RA-S-2008 (Reference 19.0-19)
- ASME/ANS RA-Sa-2009 (Reference 19.0-20)

A description of the design-specific PRA and design features for the prevention and mitigation of severe accidents are included in this chapter. Reference 19.0-18 provides a detailed description of the PRA and severe accident analysis.

19.0.1 References

19.0-1 Contents of Applications; Technical Information, Title 10, Code of Federal Regulations, Part 52.47, U.S. Nuclear Regulatory Commission, Washington, DC, August 28, 2007.

19.0-2 Policy, Technical, and Licensing Issues Pertaining to Evolutionary and Advanced Light-Water Reactor Designs, SECY-93-087, U.S. Nuclear Regulatory Commission, Washington, DC, letter issued April 2, 1993 and Staff Requirements Memoranda issued July 21, 1993.

19.0-3 Contents of Applications; Technical Information, Title 10, Code of Federal Regulations, Part 50.34, U.S. Nuclear Regulatory Commission, Washington, DC, January 1, 2007.

19.0-4 Severe Reactor Accidents Regarding Future Designs and Existing Plants, NRC Policy Statement 50 FR 32138, U.S. Nuclear Regulatory Commission, Washington, DC, August 1985.

19.0-5 Safety Goals for the Operations of Nuclear Power Plants, NRC Policy Statement 51 FR 28044, U.S. Nuclear Regulatory Commission, Washington, DC, August 1986.

19.0-6 Nuclear Power Plant Standardization, NRC Policy Statement 52 FR 34884, U.S. Nuclear Regulatory Commission, Washington, DC, September 1987.

19.0-7 Regulation of Advanced Nuclear Power Plants, NRC Policy Statement 59 FR 35461, U.S. Nuclear Regulatory Commission, Washington, DC, July 1994.

19.0-8 The Use of Probabilistic Risk Assessment Methods in Nuclear Regulatory Activities, NRC Policy Statement 60 FR 42622, U.S. Nuclear Regulatory Commission, Washington, DC, August 1995.

19.0-9 An Approach for Determining the Technical Adequacy of Probabilistic Risk Assessment Results for Risk-Informed Activities, Regulatory Guide 1.200, Rev. 2, U.S. Nuclear Regulatory Commission, Washington, DC, March 2009.

19.0-10 Combined License Applications for Nuclear Power Plants (LWR) Edition, Regulatory Guide 1.206, Rev. 0, U.S. Nuclear Regulatory Commission, Washington, DC, June 2007.

19.0-11 Evolutionary Light-Water Reactor (LWR) Certification Issues and Their Relationship to Current Regulatory Requirements, SECY-90-016, U.S. Nuclear Regulatory Commission, Washington, DC, letter issued January 12, 1990 and Staff Requirements Memoranda issued June 26, 1990.

19.0-12 Final Rule to update 10 CFR Part 52,"Licenses, Certifications, and Approvals for Nuclear Power Plants" (RIN AG24), SECY-06-0220, U.S. Nuclear Regulatory Commission, Washington, DC, letter issued October 31, 2006.

19.0-13 Standard Review Plan for the Review of Safety Analysis Reports for Nuclear Power Plants, NUREG-0800, U.S. Nuclear Regulatory Commission, Washington, DC, June 1996.

19.0-14 Deleted

19.0-15 Deleted

19.0-16 Deleted

19.0-17 Deleted

19.0-18 US-APWR Probabilistic Risk Assessment, MUAP-07030-P Rev. 3 (Proprietary), Mitsubishi Heavy Industries, June 2011.

19.0-19 Standard for Level 1/Large Early Release Frequency Probabilistic Risk Assessment for Nuclear Power Plant Applications, ASME/ANS RA-S-2008 (Revision 1 RA-S-2002), American Society of Mechanical Engineers, New York, NY, April 2008.

19.0-20 Addenda to ASME/ANS RA-S-2008, ASME/ANS RA-Sa-2009, American Society of Mechanical Engineers, New York, NY, February 2009.

19.1 Probabilistic Risk Assessment

The scope of the US-APWR PRA for the DCD and COL application includes a Level 1 and Level 2 PRA for internal and external events (including flooding and fire) at full-power, low-power and shutdown (LPSD) conditions. PRA-based seismic margin analysis (SMA) is used for seismic risk evaluation. The design-specific PRA refers specifically to the PRA generated by the DC applicant. The site-specific PRA refers specifically to the PRA generated by the COL applicant.

The Level 1 evaluation of internal events at full-power conditions is based on the basic methodology and approach given in ASME/ANS RA-S-2008 and associated addendum (Reference 19.1-49, 19.1-50) and is comprised of the following technical elements:

- Initiating event analysis
- Event tree analysis
- System dependencies
- Success criteria analysis
- System analysis
- Data analysis
- Common cause analysis
- Human reliability analysis (HRA)
- Quantification and insights

The evaluation of internal events at LPSD conditions uses the same basic methods as the evaluation of internal events at full-power. A representative set of initiating events is chosen and modeled for a bounding set of plant operational states (POSs).

The evaluation of an internal flooding event is based on the basic methodology and approach given in ASME/ANS RA-S-2008 and associated addendum, NUREG/CR-2300, and NRC technical report designation NUREG-1150 (Reference 19.1-4, 19.1-5, 19.1-49, 19.1-50). A qualitative evaluation identifies flood areas and sources and a quantitative evaluation evaluates initiating events and flood scenarios.

The evaluation of an internal fire event is based on the basic methodology and approach given in National Fire Protection Association (NFPA) 805 and NUREG/CR-6850 (Reference 19.1-6, 19.1-7). A qualitative evaluation identifies fire compartments and components and a quantitative evaluation evaluates initiating events and fire scenarios.

The evaluation of a seismic event is based on a PRA-based SMA consistent with ASME/ANS RA-S-2008 and associated addendum (Reference 19.1-49, 19.1-50). The PRA-based SMA model is based on the internal events of the PRA model expanded to account for structural dependencies. The PRA-based SMA estimates the plant-level seismic

margin and accident sequences, identifies potential vulnerabilities, and demonstrates seismic margins beyond the design-level safe-shutdown earthquake (SSE).

Other external events (high winds, tornadoes, hurricanes, external floods, transportation accidents, nearby facility accidents, and aircraft crashes) are subject to screening criteria consistent with ASME/ANS RA-S-2008 and associated addendum (Reference 19.1-49, 19.1-50).

The Level 2 PRA results in LRFs for internal events at full power and the evaluation involves the following:

- Plant damage state (PDS) analysis
- Accident progression analysis
- Quantification

The primary guidance for this analysis is ASME/ANS RA-S-2008 and associated addendum, NUREG/CR-2300, and RG 1.200 (Reference 19.1-4, 19.1-9, 19.1-49, 19.1-50). MAAP version 4.0.6 (Reference 19.1-10) is employed to evaluate severe accident phenomena.

The Level 2 evaluation of the flooding and fire external events at full-power conditions is based on the same approach as for internal events. Fault trees are modified to take into account flood/fire induced failures of severe accident mitigation features and these fault trees are mapped into the internal events through the associated PDSs.

For events at LPSD, the LRFs are conservatively assumed to be the same as the core damage frequencies, with a simple bounding technique.

19.1.1 Uses and Applications of the PRA

19.1.1.1 Design Phase

The design-specific US-APWR PRA is an integral part of the design process and has been used to optimize the plant design with respect to safety. The PRA models and results have influenced the selection of design alternatives such as four train core cooling systems, an in-containment refueling water storage pit (RWSP), and full digital instrumentation and control (I&C) systems.

The US-APWR is expected to perform better than current operating plants in the area of severe accident performance since prevention and mitigation of severe accidents have been addressed during the design stage, taking advantage of PRA results and severe accident analysis. The PRA results indicate that the US-APWR design results in a low level of risk and meets the CDF, LRF, and containment performance goals for new generation pressurized water reactors (PWRs).

At the design phase, the design-specific PRA results have been used as input to technical specifications (Chapter 16), RAP (Chapter 17, Section 17.4), the security plan, and other design areas. PRA was used to determine the components and instruments

that would be subjected to risk managed technical specifications (RMTS) and surveillance frequency control program (SFCP).

Information regarding loss-of-coolant accident (LOCA) scenarios followed by failures of accumulators and the risk impact of accumulator unavailability were used to confirm the applicability of Standard Technical Specification requirements to the US-APWR design so the applicability of ~~s~~Standard ~~t~~Technical ~~s~~Specifications was considered applicable to the US-APWR design.

Sensitivity analysis results regarding reliability of the protection and safety monitoring system (PSMS) were used to confirm that the completion time and surveillance frequencies in the US-APWR technical specifications are sufficient not to degrade plant safety. Sensitivity analysis results showed that the changes from the standard technical specifications, increases in surveillance frequencies, would not result in significant increase in risk.

19.1.1.2 Combined License Application Phase

19.1.1.2.1 Uses of Probabilistic Risk Assessment in Support of Licensee Programs

A site-specific PRA in the Combined License Application (COLA) phase will be used to support licensee programs such as the human factors engineering program (Chapter 18) and the severe accident management program. The PRA in the COLA phase will also be utilized to support implementation of 10 CFR 50.65 (Reference 19.1-12), the maintenance rule, and the technical specifications as well as the reactor oversight process including the mitigating systems performance index and the significance determination process.

The PRA may require updating to assess site-specific information (e.g., ultimate heat sink) and associated site-specific external events (high winds, tornadoes, hurricanes, external floods, transportation, and nearby facility accidents).

19.1.1.2.2 Risk-Informed Applications

Site-specific PRA insights are utilized to develop risk-managed technical specifications if the COL applicant chooses to adapt risk-managed technical specifications.

19.1.1.3 Construction Phase

A site-specific PRA may require updating during the construction phase to reflect site-specific characteristics or design changes. The PRA may also be used to support licensee programs or risk-informed applications as appropriate.

19.1.1.3.1 Uses of Probabilistic Risk Assessment in Support of Licensee Programs

The PRA in the construction phase will be used to support licensee programs such as the human factors engineering program (Chapter 18) and the severe accident management program.

19.1.1.3.2 Risk-Informed Applications

The PRA in the construction phase will be updated and upgraded as necessary to support risk-informed applications during the construction phase.

19.1.1.4 Operational Phase

A COL applicant that references the US-APWR design certification will describe the uses of PRA in support of licensee programs and identify and describe risk-informed applications being implemented during the operational phase.

19.1.1.4.1 Uses of Probabilistic Risk Assessment in Support of Licensee Programs

A COL applicant that references the US-APWR design certification will describe the uses of PRA in support of licensee programs being implemented during the operational phase.

19.1.1.4.2 Risk-Informed Applications

A COL applicant that references the US-APWR design certification will identify and describe risk-informed applications being implemented during the operational phase.

19.1.2 Quality of PRA

The quality of the PRA for the US-APWR is measured in terms of its appropriateness with respect to scope, level of detail, and technical acceptability. RG 1.200 (Reference 19.1-9) was reviewed to ensure that the quality of the US-APWR PRA is consistent with the NRC's expectations.

The following methods are utilized during development of the PRA to ensure that pertinent requirements of 10 CFR 50, Appendix B (Reference 19.1-13) are met:

- Use of qualified personnel
- Use of procedures that ensure control of documentation, including revisions, and provide for independent review, verification, or checking of calculations and information
- Documentation and maintenance of records, including archival documentation, as well as submittal documentation
- Use of procedures that ensure appropriate attention and corrective actions are taken if assumptions, analyses, or information used previously are changed or determined to be in error.

19.1.2.1 PRA Scope

The scope of the US-APWR PRA for the DCD and COL application includes a Level 1 and Level 2 PRA for internal, external events (including flooding and fire) and a PRA-based SMA at full-power, and LPSD conditions. The design-specific PRA refers

specifically to the PRA generated by the DC applicant. The site-specific PRA refers specifically to the PRA generated by the COL applicant.

19.1.2.2 PRA Level of Detail

The US-APWR realistically reflects the actual plant design, planned construction, anticipated operational practices, and relevant operational experience. The approach, methods, data, and computer codes that are used, as documented throughout this chapter, are compliant with industry standard codes and practices. The level of detail is sufficient to ensure that the impacts of designed-in dependencies are correctly captured. The level of detail of the PRA is sufficient to provide confidence in the results such that the PRA may be used to support licensee programs and design activities in design phase.

19.1.2.3 PRA Technical Adequacy

The quality of the methodologies, processes, analyses, and personnel associated with the US-APWR PRA comply with the provisions for nuclear plant quality assurance. Toward this end, the US-APWR PRA adheres to the recommendations provided in RG 1.200 pertaining to quality and technical adequacy. The US-APWR incorporates the technical elements of an acceptable PRA shown in Table 1 of RG 1.200 (Reference 19.1-9), and is consistent with the technical characteristics and attributes given in Table 2 through Table 10 of RG 1.200.

A peer review has been conducted to ensure that the technical adequacy of US-APWR PRA meets the requirements in the PRA standard endorsed by NRC.

19.1.2.4 PRA Maintenance And Upgrade

The objective of the PRA maintenance and upgrade program is to ensure that the PRA will be maintained and upgraded so that its representation of the as designed, as-to-be built, and as-to-be operated plant is sufficient to support the applications for which the PRA is being used. The PRA will be under configuration control and the program will contain the following key elements:

- A process for monitoring PRA inputs and collecting new information
- A process that maintains and upgrades the PRA to be consistent with the as-built, as-operated plant
- A process that ensures the cumulative impact of pending changes is considered when applying the PRA
- A process that evaluates the impact of changes on previously implemented risk-informed decisions that have used the PRA
- A process that maintains configuration control of computer codes used to support PRA quantification
- Documentation of the program

PRA maintenance involves updating of PRA models to reflect plant changes such as modifications, procedure changes, or plant performance. A PRA upgrade involves the incorporation into the PRA model of new methodologies or significant changes in scope or capability. Those changes could include items such as new human error analysis methodology; new data update methods; new approaches to quantification or truncation; or new treatments of common cause failure (CCF).

During the design phase, changes to PRA inputs and discovery of new information will be evaluated to determine whether a PRA maintenance or upgrade is warranted. Changes to the PRA impacting risk insights or key assumptions will be prioritized to ensure that the most significant changes are incorporated as soon as practical and associated documentation is updated accordingly. Other changes will be incorporated during the next PRA update.

In accordance with 10 CFR 50.71(h)(1) (Reference 19.1-15), prior to the scheduled date for initial loading of fuel, a plant-specific PRA that covers initiating events and modes for which NRC-endorsed consensus standards on PRA exist one year prior to the scheduled date for initial loading of fuel will be developed. The plant-specific PRA will reflect the as-built plant. The plant-specific PRA model will utilize the US-APWR DCD PRA model as a baseline. Any additional modeling changes resulting from the plant-specific design, departures from the design used in the US-APWR DCD PRA, insights from procedure development and operator training, or other PRA modeling changes that are identified subsequent to the completion of the US-APWR DCD PRA will also be utilized. The PRA-based risk insight differences between the plant-specific PRA and the US-APWR DCD PRA will be evaluated. During the construction phase, plant walk-downs confirming PRA assumptions will be conducted.

During operation, PRA will be maintained and updated in accordance with approved station procedures on a periodic basis not to exceed four years.

Changes to the PRA due to PRA maintenance and PRA upgrade will meet the technical requirements of the NRC-endorsed PRA standards (Reference 19.1-49 and 19.1-50).

19.1.3 Special Design/Operational Features

Design and operational features of the US-APWR that result in improved plant safety as compared to currently operating nuclear power plants, include the following:

- Mechanical four train systems with direct vessel injection (DVI) system design
- Elimination of the need for low-head safety injection (LHSI) pumps by utilizing an advanced accumulator injection system
- Elimination of recirculation switching by an in-containment RWSP
- Enhanced safety through the use of four trains of safety electrical systems
- Upgraded piping design pressure for the residual heat removal system (RHRS)

The major unique features of the US-APWR related to PRA scope are

- Four train core cooling - High reliability due to four advanced accumulators and a four train high head injection system
- In-containment RWSP - Elimination of recirculation switchover enhances reliability of long-term core cooling after a loss-of-coolant accident (LOCA)
- Full Digital I&C - Diverse actuation system (DAS) installed as a counter-measure against common cause failures in software of safety I&C
- Four train safety-related systems separated by physical barriers

The four train system design reduces the US-APWR system dependencies when compared to those associated with current United States PWRs. System dependencies are discussed in Subsection 19.1.4.1. The upgraded design pressure of the RHRS results in a negligible frequency of occurrence of an interfacing system LOCA

19.1.3.1 Design/Operational Features for Preventing Core Damage

Key preventive features that are intended to minimize initiation of plant transients, arrest the progression of plant transients, and prevent severe accidents include the following safety systems:

- High head injection system (Chapter 6, Section 6.3.2)

  The high head injection system consists of four independent and dedicated SI pump trains. The SI pump trains are automatically initiated by ECCS actuation signal or manually by DAS, and supply borated water from the RWSP to the reactor vessel via direct vessel injection line. This system provides the safety injection function during LOCA events and feed and bleed operation. This function is addressed in the event tree (ET) of at power Level 1 model discussed in Subsection 19.1.4.1.1.

  During plant shutdown, high head injection system provides RCS makeup function in case RHR function is lost. This function is addressed in the ET of LPSD Level 1 model discussed in Subsection 19.1.6.1.

- Accumulator system (Chapter 6, Section 6.3.2)

  There are four accumulators, one supplying each reactor coolant cold leg. The accumulators incorporate internal passive flow dampers, which function to inject a large flow to refill the reactor vessel in the first stage of injection, and then reduce the flow as the accumulator water level drops. Thus, the accumulators provide the integrated function of low head safety injection system in the event of LOCA. This function is addressed in the ET of at power Level 1 model discussed in Subsection 19.1.4.1.1.

- Charging injection (Chapter 9, Subsection 9.3.4)

  Charging injection is provided by the chemical and volume control system. The charging and letdown system provides a function to maintain programmed water level in the pressurizer and maintain appropriate reactor coolant inventory in the

reactor coolant system (RCS) during all phases of plant operation. In the case of a small leak of the reactor coolant occur without generating safety injection signal, the volume of the reactor coolant can be recovered with the charging pump, provided that the water of the refueling water storage pit (RWSP) is supplied to the refueling water storage auxiliary tank (RWSAT). This function is addressed in the ET of at power Level 1 model discussed in Subsection 19.1.4.1.1.

During plant shutdown, charging injection provides RCS makeup function in case RHR function is lost. This function is addressed in the ET of LPSD Level 1 model discussed in Subsection 19.1.6.1.

- Containment spray/residual heat removal system (CS/RHRS) (Chapter 5, Subsection 5.4.7 and Chapter 6, Subsection 6.2.2)

  The CS/RHRS consists of four independent subsystems, each of which receives electrical power from one of four Class 1E ac buses. Each subsystem includes one CS/RHR pump and one CS/RHR heat exchanger, which have functions in both the CSS and the RHRS. CS/RHRS provides multiple functions such as, (1) containment spray to decrease pressure and temperature in the containment after receipt of containment spray signal, (2) alternate core cooling in case all safety injection system failure at the LOCA, (3) RHR operation for long term core cooling, and (4) heat removal function for long term containment cooling. These functions are addressed in the ET of at power Level 1 model discussed in Subsection 19.1.4.1.1.

  During plant shutdown, RHRS provides function to remove decay heat from the RCS. This function is addressed in the ET of LPSD Level 1 model discussed in Subsection 19.1.6.1.

- Reactor trip (Chapter 7, Section 7.2)

  Reactor trip signal is provided by the reactor protection system (RPS), which consists of four redundant and independent trains. Four redundant measurements using sensors from the four separate trains are made for each variable used for reactor trip. In addition, diverse actuation system is provided as a countermeasure against software failure of the digital I&C system. This function is addressed in the ET of at power Level 1 model discussed in Subsection 19.1.4.1.1.

- Engineered safety function system (Chapter 7, Section 7.3)

  Engineered safety feature (ESF) actuation system consists of four redundant ESF trains and provides ESF actuation signal such as ECCS actuation signal or containment spray actuation signal using two-out-of-four voting logic. This function is addressed in the ET of at power Level 1 model discussed in Subsection 19.1.4.1.1.

- Emergency feedwater system (EFWS) (Chapter 10, Subsection 10.4.9)

  EFWS consists of two motor-driven pumps and two steam turbine-driven pumps with two emergency feedwater pits. The EFWS supplies feedwater to the steam generators at a sufficient flow rate required for the transient conditions or postulated accidents and hot standby upon detection of EFW actuation signal or DAS. This function is addressed in the ET of at power Level 1 model discussed in Subsection 19.1.4.1.1.

  During plant shutdown, the system provides the heat removal functions via SGs while the RCS is in the closed state. This function is addressed in the ET of LPSD PRA model discussed in Subsection 19.1.6.1.

- Pressurizer control (Chapter 5, Subsection 5.4.12)

  The pressurizer is sized to have sufficient volume to accomplish the preceding requirements without the need of power-operated relief valves. Safety depressurization valves (SDVs) are provided at top head of the pressurizer in order to cool the reactor core by feed and bleed operation when loss of heat removal from steam generator (SG) occurs. This function is addressed in the ET of at power Level 1 model discussed in Subsection 19.1.4.1.1.

- Main steam isolation (Chapter 10, Section 10.3)

  MSIVs are installed in each of the main steam lines to (1) limit uncontrolled steam release from one steam generator in the event of a steam line break, and to (2) isolate the faulted SG in the event of SGTR. In the failure of high head injection system, main steam depressurization valve (MSDV) can be used for RCS cooling in order to transfer alternate core cooling. These functions are addressed in the ET of at power Level 1 model discussed in Subsection 19.1.4.1.1.

- Component cooling water (Chapter 9, Subsection 9.2.2)

  The component cooling water (CCW) system which consists of two independent subsystems provides cooling water required for various components during all plant operating conditions, including normal plant operating, abnormal and accident conditions. During plant operation, CCW provides cooling water for the thermal barrier of the RCP to maintain RCP seal integrity. The CCW also functions as the heat sink for the CS/RHRS as well as the alternate containment cooling. These functions are addressed in the Level 1 model discussed in Subsection 19.1.4.1.1 and Subsection 19.1.6.1.

- Essential service water system (Chapter 9, Subsection 9.2.1)

  The essential service water (ESW) system which consists of four independent trains provides cooling water to CCW heat exchangers and essential chiller units. The system transfers the heat from these components to ultimate heat sink through CCWS. These functions are addressed in the FTs of at power Level 1 and LPSD PRA model discussed in Subsection 19.1.4.1.1 and Subsection 19.1.6.1.

- Gas turbine generators (Chapter 8, Section 8.3)

  Four Class 1E gas turbine generators (GTGs) supply power to their dedicated Class 1E bus as a counter measure against loss of offsite power. When loss of offsite power occurs, GTGs automatically start and would accept load in less than or equal to 100 seconds after receiving the start signal. This function is addressed in the ET of Level 1 model discussed in Subsection 19.1.4.1.1 and Subsection 19.1.6.1.

- I&C system (Chapter 7, Section 7.1)

  The I&C system consists of the safety-related protection and safety monitoring system (PSMS), the non safety-related plant control and monitoring system (PCMS), and the non safety-related DAS. The DAS monitors and controls safety and non-safety systems, required to cope with anticipated operational occurrences and postulated accidents concurrent with a common cause failure the disables all functions of the PSMS and PCMS. These functions are addressed in the ET and FTs of Level 1 PRA model discussed in Subsection 19.1.4.1.1 and Subsection 19.1.6.1.

- Refueling water storage pit (Chapter 6, Section 6.3).

  Refueling water storage pit (RWSP) is the water source for SI pumps and CS/RHR pumps and has sufficient inventory of boric acid water for refueling and long-term core cooling during a LOCA event. Four independent ECC/CS strainers are installed inside the RWSP. This function is addressed in the FTs of at power Level 1 model discussed in Subsection 19.1.4.1.1.

  During plant shutdown, water in the RWSP is transferred to RWSAT which is water source for charging pump or to spent fuel pit for gravity injection via refueling water recirculation (RWR) pumps. This function is addressed in the FTs of LPSD PRA model discussed in Subsection 19.1.6.1.

The following non-safety systems are also considered key preventive features:

- Alternate containment cooling (Chapter 9, Subsection 9.4.6)

  In the case of the loss of containment cooling at accident conditions, alternate containment cooling utilizing the containment fan cooler system is performed by connecting the component cooling water (CCW) system to the containment fan cooler system. Alternate containment cooling provides long term containment cooling by natural convection in containment. This function is addressed in the ET of at power Level 1 model discussed in Subsection 19.1.4.1.1.

- Alternate ac power source (Chapter 8, Subsection 8.4.1.3)

  In addition to the Class 1E GTGs, two non-Class 1E GTGs supply power to permanent buses. These two GTGs also functions as an alternate ac power source (AAC), which can supply power to any two of the four Class 1E ac buses in case Class 1E GTGs fail during loss of offsite power. To minimize the potential for common cause failures with the Class 1E GTGs, the AAC power source engine

and generator are designed by a different manufacturer than the Class 1E EPS engine and generator, and have diverse starting systems. Additionally, the auxiliary and support systems for the AAC GTGs are independent and separate from the Class 1E GTGs to minimize the potential for common cause failures. This function is addressed in the ET of Level 1 model discussed in Subsection 19.1.4.1.1 and Subsection 19.1.6.1.

19.1.3.2 Design/Operational Features for Mitigating the Consequences of Core Damage and Preventing Releases from Containment

The containment system features and human actions that are provided to mitigate the consequences of an accident and to prevent containment failure include the following safety systems:

- Containment isolation (Chapter 6, Subsection 6.2.4)

  The containment prevents or limits the release of fission products to the environment. The containment isolation system establishes and preserves the containment boundary integrity. Failure of containment isolation system leads to a large release of fission products. This function is addressed in the CSET of Level 2 model discussed in Subsection 19.1.4.2.1.

- Containment spray (Chapter 6, Subsection 6.2.2)

  The containment spray system is designed to perform two major functions, i.e. (1) containment heat removal and (2) fission product removal. As for the features for mitigation of the consequences of core damage and prevention of release from containment, the above function (1) is expected. This function is addressed in the Level 1+ model discussed in Subsection 19.1.4.2.1.

  The containment spray system also takes a fundamental role for the reactor cavity flooding. The fundamental design concept of the US-APWR for severe accident termination is reactor cavity flooding and cool down of the molten core by the flooded coolant water. Therefore, dependable systems are provided to properly flood the reactor cavity during a severe accident. Containment spray water flows into the reactor cavity through the drain path provided between the SG loop compartment and the reactor cavity. This function is addressed in the CSET of Level 2 model discussed in Subsection 19.1.4.2.1.

The following non-safety systems/functions are also considered key mitigation features:

- Hydrogen ignition system (i.e. Igniters) (Chapter 6, Subsection 6.2.5)

  For controlling postulated hydrogen generation during a severe accident, glow type igniters are provided. Igniters are a proven technique to control combustible gases to prevent violent detonation, do not limit their effectiveness by accumulation of aerosols, and have good capability in terms of gas amount and controlling speed to control combustible gas. They are also compact in size and easy to maintain. The location to arrange igniters is carefully determined through accident progression analyses in order to enhance the effectiveness to control

hydrogen. This function is addressed in the CSET of Level 2 model discussed in Subsection 19.1.4.2.1.

- Firewater injection into reactor cavity (Chapter 9, Subsection 9.5.1)

  This design feature constitutes the reactor cavity flooding system together with the containment spray water injection through the drain path. The fire protection water supply system (FSS) is provided outside of containment and in stand-by status during normal operation. The system line-up is modified for emergency operation during a severe accident and provides firewater from outside to the reactor cavity. This function is addressed in the CSET of Level 2 model discussed in Subsection 19.1.4.2.1.

- Reactor cavity floor area (Chapter 3, Subsection 3.8.5)

  The geometry of the reactor cavity is designed to ensure adequate core debris coolability. Sufficient reactor cavity floor area is provided to enhance spreading of the core debris. This ensures that an adequate interface is maintained between the core debris and coolant water and that the thickness of the deposited core debris is reduced to diminish the heat flux transmitted from the core debris to the reactor cavity floor concrete. Generic Letter No. 88-20 issued by NRC in 1988 states "…assessments (should) be based on available cavity (spread) area and an assumed maximum coolable depth of 25 cm. For depths in excess of 25 cm, both the coolable and noncoolable outcomes should be considered." In order to address this discussion, the core debris spreading behavior is carefully reviewed in handling the US-APWR core debris coolability issue at the design stage. The calculated result is utilized as one of the sources for quantification of the CPET of Level 2 model discussed in Subsection 19.1.4.2.1.

- Reactor coolant system (RCS) depressurization (Chapter 5, Subsection 5.4.12)

  In addition to the safety depressurization valves which are provided for core damage prevention by such as feed and bleed operation, severe accident dedicated RCS depressurization valves are provided to mitigate the consequences of core damage. High pressure melt ejection and temperature induced steam generator tube rupture can be avoided by reducing the primary system pressure after core melt. The function of RCS depressurization is addressed in the CSET and the above mentioned two physical phenomena in relation to failure of RCS depressurization are addressed in the CPET of Level 2 model, as discussed in Subsection 19.1.4.2.1.

- Core debris trap (Chapter 3, Subsection 3.8.5)

  Core debris trap is provided in the reactor cavity in order to decrease the amount of core debris dispersion to the upper compartment in the event of high pressure melt ejection and subsequent direct containment heating. Accordingly the containment atmosphere temperature rise by the limited amount of core debris is not very significant. The effect of this design feature is not explicitly addressed in the Level 2 PRA however the direct containment heating is considered in the CPET as discussed in Subsection 19.1.4.2.1.

- Alternate containment cooling (Chapter 9, Subsection 9.4.6)

  This is a system to depressurize containment by promoting natural circulation in containment. The containment fan cooler is a system provided to stabilize the containment environmental condition during normal operation through forced air circulation by fan. However, the electrical power of fan may not be available during a severe accident. Natural circulation is instead credited to adequately mix the containment atmosphere. The containment fan cooler employs non-essential chilled water as the coolant under normal operation. Since this non-essential chilled water cannot be available under severe accident conditions, the system line-up is switched from the chilled water system to the CCW system which supplies CCW to the containment fan cooler as coolant. Although CCW is not as cold as chilled water, it is sufficiently colder than the containment atmosphere under severe accident conditions. This temperature difference between the containment fan cooler and containment atmosphere causes condensation of surrounding steam. This condensation mechanism promotes more natural circulation flow because of the pressure difference due to condensation of steam. This enhances continuous containment depressurization. The function of alternate containment cooling is addressed in the Level 1+ model discussed in Subsection 19.1.4.2.1.

- Firewater injection to spray header (Chapter 6, Subsection 6.2.2 and Chapter 9, Subsection 9.5.1)

  The FSS is also utilized to promote condensation of steam. The FSS is lined up to the containment spray header when the CSS is not functional, and provides water droplet from top of containment. This will temporarily depressurize containment. However, the FSS does not contain a heat exchanger, and thus has no ability to remove heat from containment to terminate the containment pressurization. Instead, this design feature can be expected to temporarily increase the heat sink in containment and extend the critical time of containment failure. The effect of this design feature is not explicitly addressed in the Level 2 PRA however this function is utilized to address the recovery of CSS and CS/RHR heat exchanger of the CSET of Level 2 model as discussed in Subsection 19.1.4.2.1.

19.1.3.3 Design/Operational Features for Mitigating the Consequences of Releases from Containment

Key mitigating features that are intended to minimize offsite doses/consequences include the following safety systems:

- Containment spray (Chapter 6, Subsection 6.5.2)

  As discussed in the Subsection 19.1.3.2, the CSS has two major functions, and as for the features for mitigation of the consequences of release from containment, the function (2) is expected.

The following non-safety systems/functions are also considered as key mitigation features:

- Firewater injection to spray header (Chapter 6, Subsection 6.5.2 and Chapter 9, Subsection 9.5.1)

  Similar to the CSS, firewater spray also has two functions, and as for the features for mitigation of the consequences of release from containment, the function (2) of CSS is expected.

19.1.3.4 Uses of the PRA in the Design Process

PRA was used in the design process to achieve the following objectives.

- Identify features and requirements introduced to reduce or eliminate the known weakness/vulnerabilities in current rector designs.
- Indicate the effect of new design features and operational strategies on plant risk.
- Identify PRA-based insights and assumptions used to develop design requirements.

The basic design concept of the US-APWR is similar to current PWRs. However, special design features are introduced to enhance safety of the plant. Special design features are described in the previous Subsections 19.1.3.1 through 19.1.3.3. PRA is used to select among alternative designs and to quantify its effect on risk reduction by elimination of weakness/vulnerabilities. The US-APWR establishes the following accident measures guided by the use of PRA. These measures are diverse compared to the above safety systems.

Prevention of Beyond-Design-Basis-Accidents progression:

- Measures against anticipated transient without scram (ATWS) - The safety grade reactor protection system is highly reliable due to the independent four train design. The DAS, which has functions to prevent ATWS, is installed as a countermeasure to CCF of the digital I&C systems and thus will preclude ATWS events.
- Measures against Mid-Loop Operation - To prevent over-drain during mid-loop operation, a loop water level gage and an interlock (actuated by the detection of RCS Low water level signal), act to isolate water extraction.
- Measures against station blackout - Diversity of emergency power sources to mitigate station blackout. The system is installed for achieving Safe Shutdown to a cool down state after station blackout.
- Additional Protection against an Interfacing system LOCA - Higher rated piping of residual heat removal systems reduces the occurrence of interfacing system LOCA. Even if CSS/RHRS isolation valves remain open due to malfunction during normal operation, reactor coolant from main coolant pipe would flow to refueling water storage pit without pipe break outside containment.

Mitigation of severe accidents:

- Measures against severe accident after core damage - Special features for prevention and/or mitigation of severe accident phenomena such as hydrogen combustion, core debris coolability, temperature-induced steam generator tube rupture (SGTR), high pressure melt ejection and direct containment heating, and long-term containment overpressure.

Design improvements to reduce or eliminate weaknesses in current plants were investigated for each categorized causes of core damage or large release. Major improved design features adopted in the US-APWR to reduce or eliminate weaknesses in current reactor design is summarized in Table 19.1-1.

PRA is also used to confirm that the safety goals are achieved. Through the PRA study, PRA-based insights and key assumptions are identified to support the design process. PRA-based insights are shown in Subsections 19.1.4 through 19.1.6 and the key assumptions supporting this conclusion are given in 19.1.7.1, respectively.

19.1.4 Safety Insights from the Internal Events PRA for Operations at Power

19.1.4.1 Level 1 Internal Events PRA for Operations at Power

A description of the Level 1 internal events PRA for operations at power including the results of the PRA analysis is provided in the following subsections.

19.1.4.1.1 Description of the Level 1 PRA for Operations at Power

The methodology used to develop the US-APWR Level 1 PRA model for operation at power includes the use of fault trees and event trees, which are quantified using a fault tree linking process. The result of the fault trees linking quantification are a CDF and a list of dominant accident sequences and dominant cutsets.

The Level 1 evaluation of internal events at full-power conditions is comprised of the following technical elements:

- Initiating event analysis
- Event tree analysis
- System dependencies
- Success criteria analysis
- System analysis
- Data analysis
- Common cause analysis
- Human reliability analysis
- Quantification

Each of the technical elements is discussed below.

Initiating event analysis

An initiating event is defined as a disturbance which causes an upset condition of the reactor plant challenging reactor systems and requiring operator performance of safety functions that are necessary and sufficient to prevent core damage. Such events result in challenges to plant safety functions, and postulated failures in these systems, equipment, and operator response could lead to an end state involving core damage and/or radionuclide release.

Initiating events analyzed are selected to have a reasonable degree of completeness in the coverage of events that may occur in a plant. Moreover, to facilitate an efficient but realistic estimation of CDF, initiating events are grouped so that events in the same group have similar mitigation requirements.

In meeting these objectives, the following selection criteria are considered in the initiating event analysis:

- They result from a systematic process that is capable of producing an exhaustive set of events that could cause an initiating event
- They are unique from each other in terms of their impact on the plant (i.e., their impact on pressure and temperature, their need for protective plant response, their impact on inventory and cooling, their impact on front line and support systems and their capability to support plant safety functions, and their potential for producing core damage with different potential for containment challenge, failure, or bypass)
- Each event in a group represents a set of similar but distinguishable occurrences
- The events in a group are represented by the event that has the most severe impact on the plant capability to support safety functions

In order to satisfy the event selection criteria, initiating event analysis is carried out in two basic steps.

The first step is the identification of initiating events. An exhaustive screening evaluation of initiating events is performed to identify plant-specific initiating events. For the full power operation PRA, an initiating event is defined as any event that results in a plant transient condition that results in a reactor trip. An exhaustive list of structure, system, and components (SSCs) in the plant is compiled and failure modes and effects analysis (FMEA) is performed to identify events that can be considered as an initiating event. The list of initiating events identified by exhaustive screening is then compiled from deterministically selected events and events considered in relevant PRA studies.

The second step is the initiating event grouping. The goal is to define the minimum set of events that captures the initiating events with uniquely different challenges on the plant safety functions. Initiating events provided in the exhaustive list are categorized into groups dictates the structure of the event sequence model. Dependencies between causes of the initiating events and the systems that are available to mitigate the consequences of the initiating event must be adequately defined in the initiating event

grouping process. A representative event is chosen from the group to bound performance within the group.

Initiating events identified by this process, along with the frequencies and the uncertainties of the events, are shown in Table 19.1-2. Uncertainties of initiating event frequencies are assumed to form the log-normal distribution. Large error factor (EF) (=10) is assumed when there are no past records in NUREG/CR-6928 (Reference 19.1-16). Otherwise small EF (=3) is assumed with a few exceptions. Internal fire and flooding events are identified and initiating event sequences are presented in Subsections 19.1.5.2 and 19.1.5.3. Initiating events during LPSD are identified and evaluated in Subsection 19.1.6.

Event tree analysis

The accident sequences that may stem from the initiating events are modeled in the form of event trees. The event trees are generally time sequences of response potential and depict the probabilistic response of the plant to a postulated disturbance. The response is depicted as nodes that represent the non-safety and safety systems potential response or use. The model includes support systems and operator actions that either respond to the initiating events or mitigate failure of other systems although this detail is often in the fault trees.

Accident sequence development involves, for each functional initiating event category, defining the safety functions and the systems and operator actions that are potentially available to support each safety function for inclusion in the event trees. Event trees are developed that trace the event sequences from initiating event to end states. The event trees are defined so as to capture the diversity of plant response and severity.

The success criteria for each event tree top event are defined in order to support the development of fault trees for the system functions and human reliability evaluations (for those top events that include operator actions). Fault tree definition includes the development of dependency matrices that identify the dependencies among front line systems (Table 19.1-3), front line to support system dependencies (Table 19.1-4), support system to support system dependencies (Table 19.1-5 and Table 19.1-6), and the dependencies between initiating events and systems (Table 19.1-7).

An event sequence model structure has been developed that facilitates the identification of functional, physical, and human dependencies between the causes of the initiating events and the causes of system and operator action failures that violate any of the event tree top event success criteria.

The event sequence development begins, from a plant response perspective, with everything operating and progresses to display critical and important failure paths in a logical progression. Event depictions are generally left to right decisions in the time order of plant response.

An event tree based sequence modeling approach is generally used with each event type based upon the initiator being developed in a unique tree. Safety functions necessary to achieve safe shutdown are modeled. Safety functions are derived from past PWR PRAs and from an evaluation of the plant response to the initiating event.

Event trees developed for each initiating event are shown in Figure 19.1-1. Heading IDs used in event trees are listed in Table 19.1-8. Descriptions of event headings and branches for each initiating event are shown in Table 19.1-9.

The event tree end states result in a set of accident classes (ACLs). The ACLs are described in Table 19.1-10. The ACLs are the initial conditions for the containment event tree (CET) and allow for grouping of similar core damage sequences by considering the similarity from the Level 1 PRA system event tree. This similarity includes core damage state, accident progression in containment, availability of mitigation features, and other accident development features.

ACLs are classified by considering the following parameters, which may influence the accident progression in containment and the potential fission product release to the environment.

- Initiating event and primary system pressure
- Containment intact or failed at core damage
- Accident progression in containment
- Loss of support system as initiating events
    - A – The identification of ACLs is a combination of letters or symbols identifying plant conditions within each of the parameters above. The first classification in the ACL designation is associated with the parameter initiating event and primary system pressure and may be one of the following: A –Large and medium break LOCA (low primary system pressure)
    - S – Small break LOCA (medium primary system pressure), including transient-induced SLOCAs and primary system depressurization by manually opening the SDVs
    - T – Transient and SGTR with isolation of the failed SG, both with failure of manual opening of the SDVs for RCS depressurization (high primary system pressure)
    - G – Containment bypass (intermediate primary system pressure)

The second classification in the ACL designation is associated with the parameter containment intact or failed at core damage and may be one of the following:

- E – Intact containment at core damage (containment and containment isolation failure possible after core damage)
- L – Containment fails before core damage

The third classification in the ACL designation is associated with the parameter accident progression in containment and may be one of the following:

- D – Potentially dry condition in reactor cavity; alternate containment cooling by containment fan cooler system is failed
- F – Potentially dry condition in reactor cavity; alternate containment cooling by containment fan cooler system is activated
- W – Wet condition in reactor cavity; no containment spray (CS) activation
- S – Wet condition in reactor cavity; CS activated although no heat removal
- HF – Wet condition in reactor cavity by emergency core cooling system (ECCS); alternate containment cooling by containment fan cooler system is activated, heat removal success
- HS – Wet condition in reactor cavity by CS; alternate containment cooling by containment fan cooler system is activated and heat removal success
- I – Wet condition in reactor cavity; CS activated and heat removal success
- C – Containment failure before core damage

The fourth classification in the ACL designation is associated with the parameter loss of support system initiating events. This classification only appears in ACLs in which the initiating event is a loss of offsite power (LOOP) or loss of component cooling water (CCW), and may be one of the following:

- ‘(Prime) – The initiating event is a LOOP. Recovery of alternating current (ac) power supply does not occur before core damage
- ‘’(Double Prime) – The initiating event is a loss of CCW and this includes common cause failures of all CCW to restart after power recovery. Recovery of the CCWS does not occur before core damage.

System dependencies

The systems that are included in the systems analysis for internal events are provided in Table 19.1-11. Simplified diagrams of major systems are shown in Figure 19.1-2.

System dependencies are classified according to the following system interdependencies:

- Frontline systems to frontline systems
- Supporting systems to frontline systems
- Supporting systems to supporting systems

Tables 19.1-3 through 19.1-6 provide a summary of the system dependencies.

The impact of initiating events on mitigation systems is summarized in Table 19.1-7.

Success criteria

The approach used in this success criteria analysis is based on the ASME/ANS PRA standard (Reference 19.1-49, 19.1-50) requirements. The technical portions of the success criteria determination are based on the following:

- The definition of core damage

  Core damage is defined as the uncovery and heat-up of the reactor core to the point at which prolonged oxidation and severe fuel damage involving a large fraction of the core is anticipated.

- The specific plant parameter of core damage

  The US-APWR specific plant parameter of core damage is based on a peak cladding temperature of greater than 2200°F using a code with detailed core modeling and peak cladding temperature greater than 1400°F using a code with simplified core modeling. Examples for core damage described in ASME/ANS PRA standard SC-A2 Category II/III (Reference 19.1-49, 19.1-50) include core-predicted peak node temperature > 2200°F using a code with detailed core modeling or core-predicted peak node temperature > 1800°F using a code with simplified core modeling. The specific plant parameters and associated criteria used for US-APWR can be accepted considering that the peak cladding temperature is almost equivalent to the core peak node temperature especially after core uncovery and that temperature criterion using a code with simplified core modeling is much smaller than for the example described in ASME standard. In the success criteria analyses, MAAP4.0.6 and WCOBRA/TRAC(M1.0) are used as a code with simplified core modeling and with detailed core modeling, respectively.

- The specification of key safety functions for core damage

  Five safety functions are identified and specified for each initiating event. The general safety functions specified for meeting the success criteria are as follows:

  - Reactivity control
  - RCS pressure control
  - RCS inventory control
  - Decay heat removal (core cooling)
  - Containment heat removal and containment isolation (CI)

  Table 19.1-12 shows the relation of these plant safety functions to the initiating events.

- The identification of mitigating systems

  Mitigating systems provided for the safety functions and alternate operator actions are summarized in Table 19.1-13 and Table 19.1-14, respectively.

- The specification of appropriate mission time

  In order to specify an appropriate mission time for modeled accident sequences, thermal/hydraulic analysis and engineering judgment are used. 24 hours was selected as an allowable mission time for the sequences. If a stable plant condition cannot be achieved within 24 hours for a specific sequence, additional evaluation of that sequence is performed to determine an appropriate PDS, to extend the mission time, and/or to model additional system recovery.

- The bases for features and operating procedures

  The US-APWR mainly utilizes active safety features and is operated by the same operating philosophy of existing PWR plants. Therefore, the basis for features and operating procedures utilizes current existing PWR plant experience.

- Plant thermal/hydraulic analysis for success criteria

  Plant thermal/hydraulic analysis for PRA success criteria have been performed, resulting in the criteria given in Table 19.1-15 and Table 19.1-16. The minimum required thermal/hydraulic analysis for basic determination of success criteria and design support thermal/hydraulic analysis is conducted to specify the final success criteria.

- The use of engineering judgment

  In the DCD phase of the US-APWR design, many portions of the detailed design and the operation procedures have not determined. Therefore, engineering judgment is used in areas where thermal hydraulic analysis cannot be performed for success criteria determination. An example is the determination of time before core uncovery at reactor coolant pump (RCP) seal LOCA. Time before core uncovery at RCP seal LOCA is determined based on engineering judgment considering the temperature resistance of RCP seal O-ring and its leakage rate under severe temperature conditions.

- The initiating events grouping and thermal/hydraulic analysis

  An initiating event group for thermal/hydraulic analysis is determined for individual initiating events, as shown below. The approach of the representative thermal/hydraulic analyses to determine accomplishment of the success criteria is to evaluate the most severe event among initiating events in a group and the available mitigating functions by considering minimum requirements for system functioning.

  - Emergency letdown line break, pressurizer safety valve stuck open and RCP seal LOCA have less severe success criteria than RCS line break LOCA because all ECCS trains are available.

- General transient, LOOP, etc. have less severe success criteria for EFWS than Loss of Feedwater.

- The analysis model and computer codes

  MAAP 4.0.6 code as well as analysis results described in Chapter 15 are used to determine success criteria.

- The results of the thermal/hydraulic analysis

  A representative result of the thermal/hydraulic analysis is given in Table 19.1-15

- Determination of success criteria

  Final success criteria, shown in Table 19.1-16, are determined from the design, engineering judgment and thermal/hydraulic analysis results in a manner that allows a margin for the uncertainties attributed to models of the thermal/hydraulic analyses and grouping of initiating events

Systems analysis

The systems analysis provides for treatment of the causes of system failure and unavailability modes represented in the initiating events analysis and sequence definition.

The fault tree models include contributions due to the following:

- Random component failures
- Outages for maintenance and test
- Support systems
- CCFs
- Human errors in failing to restore equipment to its operable state
- Human errors in failing to perform procedural actions

Fault trees are developed to the level of detail for which existing data can be applied. For active systems, passive failures that are potentially significant are included.

General assumptions and conditions applied to system analysis are summarized below.

General modeling conditions

- Models reflect the design as intended to be built, as intended to be operated, including how portions that are similar to existing designs have performed during their installed operating history
- Systems which participate in the necessary response to events or which provide critical support to such systems are to be modeled

- Models reflect the success criteria for the systems to mitigate each identified accident sequence
- Models capture the impact of dependencies, including support systems and harsh environmental impacts

Conditions concerning level of detail

- The level of detail in the model matches one for one the simplified diagrams and includes key active components and potential misaligned components based upon data availability
- Models include contributions due to random component failures; outages for maintenance and test; support systems; CCFs; human errors to restore equipment to its operable state; and human errors to fail to perform procedural actions
- Models include both active and passive components and failure modes that impact the function of the system
- A complete treatment of CCFs, intersystem and intra-system dependencies, as well as dependencies on POSs is provided
- The fault tree is developed to the level of detail for which existing data can be applied

Failure modes of components modeled are summarized below

- Models include both active and passive components and failure modes that impact the function of the system
- Random component failure modes are modeled to a level of detail consistent with the existing database
- Reduced or single data value modeling is performed for systems that are best characterized from system failure data
- Large external leak of piping and valves that occurs before an initiating event is not considered. A large external leak can be detected in a relatively short period and will be fixed. The unavailability of the system due to a large external leak before the initiating event is considered as unavailability caused by an outage for maintenance
- Plugging in flow lines are likely to occur in components such as valves and orifices rather than in piping. Therefore, the pipe plugging is not modeled as long as the plugging of components is explicitly modeled
- The plugging of closed valves during standby condition is not considered. The plugging during standby condition may affect valve operability during an open demand, but this effect is considered as “failure to open” failure mode. However, plugging after an open demand is explicitly modeled

- Probabilities of failures that occur during standby states are evaluated from test and maintenance intervals. Test and maintenance intervals are assumed to be bounded by Technical Specifications in Chapter 16. For systems that will be tested only during plant shutdown, a 24-month test interval, which is consistent with the maximum interval between plant shutdowns, is assumed

Data analysis

For each component type and failure mode, the failure rates are extracted from available generic data sources. The following steps are performed to develop the appropriate data set for the US-APWR PRA:

- Potential sources of generic failure data are collected from the following:
  - NUREG/CR-6928, “Industry-Average Performance for Components and Initiating Events at U.S. Commercial Nuclear Power Plants,” Idaho National Laboratory, February 2007 (Reference 19.1-16).
  - NUREG/CR-4550 Analysis of Core Damage Frequency: Internal Events Methodology, Volume 1, Revision 1, January 1990 (Reference 19.1-17).
  - NUREG/CR-4639, “Nuclear Computerized Library for Assessing Reactor Reliability (NUCLARR),” 1990 (Reference 19.1-18).
  - Advanced Light Water Reactor Requirements Document, Volume III, Appendix A to Chapter 1, “PRA Key Assumptions and Ground rules,” Revisions 5 and 6, December 1993 (Reference 19.1-19).
  - PLG-0500, “Database for Probabilistic Risk Assessment of Light Water Nuclear Power Plants,” 1989 (Reference 19.1-20).
  - Institute of electrical and electronic engineers (IEEE) Std. 500 “Guide to the Collection And Presentation of Electrical, Electronic, Sensing Component, And Mechanical Equipment Reliability Data For Nuclear power Generating Stations,” Appendix D, 1984 (Reference 19.1-21).
  - WASH-1400 (NUREG 75/014)”Reactor Safety Study: An Assessment of Accident Risks in US Commercial Nuclear Power Plants,” 1975 (Reference 19.1-22).
  - Nuclear Information Center “Estimation of Component Failure Rates for PSA on Nuclear Power Plants 1982 – 1997,” February 2001 (Reference 19.1-23).
- A list of component types, failure modes, failure rates, and error factors (EFs) is developed for each source
- The component types are identified for US-APWR PRA.
- The most applicable failure modes and failure rates are selected for the US-APWR PRA study.

Table 19.1-17 shows an example of the component random failure data set for the US-APWR PRA. Most of the mechanical component failure data and unavailability data are taken from NUREG/CR-6928 (Reference 19.1-16). The electrical, electronic, and sensing component failure data are derived from IEEE Std. 500 (Reference 19.1-21). When failure data are not specified in NUREG/CR-6928 or IEEE Std. 500, data are taken from WASH-1400 (Reference 19.1-22) or other sources.

The mechanical component boundaries are consistent with corresponding basic event definitions. Component boundaries are defined by generic data sources, so that the boundaries of the basic events are set to be consistent with the component boundaries.

In the PRA, beta and gamma distributions are used for the random component failure data taken from NUREG/CR-6928. Unavailability due to test and maintenance is derived from NUREG/CR-6928. Other data set sources use lognormal distributions.

Common cause analysis

Multiple Greek Letter methodology is applied to calculate the probability of common cause events. The Multiple Greek Letter parameters are estimated by applying impact vectors based on generic industry data. To develop uncertainty distributions for the Multiple Greek Letter parameters, a Bayesian framework in accordance with NUREG/CR-5485 (Reference 19.1-24) is used.

The methodology for CCF analysis is based on NUREG/CR-4780 (Reference 19.1-25) and NUREG/CR-5485. Generic data for CCF reported in NUREG/CR-5497 (Reference 19.1-26) are applied to evaluate the CCF parameters.

CCFs can result from various mechanisms. The causes of these events correspond to failure mechanisms that have been determined from analysis of nuclear plant service experience and fall into several broad categories such as the following:

- Design/manufacturing/construction
- Procedural error
- Human actions/plant staff error
- Maintenance and test
- Abnormal environmental stress

Redundant and active components as well as groups of non-identical active components that have the potential for CCF mechanisms are prime candidates for the CCF analysis. The component types that are considered for common cause analysis include those for which there is documented evidence of common cause experience as well as those that have the characteristics of redundant active components. The components considered are as follows:

System	Component Types
Electrical systems	Emergency power generators, circuit breakers, batteries, battery chargers, and inverters
Reactor trip system and ESF system	Bi-stables, reactor trip breakers, relays, shunt trip coils, sensors, logic modules, and control rods
Heating, ventilation and air conditioning (HVAC) systems	Chiller units (including compressors), dampers, air handling units, fans, and reactor containment fan coolers units
Mechanical systems	Pumps, motor-operated valves, air-operated valves, check valves, relief valves, safety valves, heat exchangers, strainers, and traveling screens

Common cause events for other component groups in a system may be defined if the event would be an important contributor to system reliability and if the components in the group can be linked to conceivable CCFs such as those defined previously.

A set of components are defined as a common cause component group when they are of the same type (pumps, valves, etc.) and when they meet the following conditions:

(1) Same initial conditions (such as normally open, normally closed, energized, and de-energized)

(2) Same use or function (such as system isolation, flow modulation, parameter sensing, and motive force)

(3) Same failure mode (such as failure to open on demand, and failure to start on demand)

(4) Same minimal cutset (failure of multiple components that appear in the same cutset)

Treatment of intersystem CCFs is consistent with Capability Categories I and II of ASME/ANS PRA Standard RA-S-2008 and associated addenda. CCFs across systems are not included in the CCF model, because they are quite different in terms of the environment, operation or service, design, and maintenance.

Some component dependencies are explicitly modeled as separate events in the fault trees to avoid double counting. Such dependencies are not included in the common cause analysis. Dependencies that are not considered in the common cause analysis are functional dependencies, human errors, maintenance and testing unavailability, and external events.

Once the common cause groups of components have been defined, the fault tree is modified so that each fault tree basic event representing the failure of a member of a

common cause group is expanded to include additional events which are combined under an “OR” gate. The PRA software used in the US-APWR PRA has a “CCF-groups” function, which automatically creates possible combinations of CCF events in the fault tree based on the common cause group defined by the user. This function is utilized to model common cause events in the fault tree.

Human reliability analysis

Human reliability analysis (HRA) consists of qualitative and quantitative assessments of the occurrences of human failure events in the context of PRA. The task of performing HRA relies on knowledge of plant system design, plant operations and human factors (operator training, human-system interface (HSI), emergency operating procedures (EOP), and severe accident management guidelines (SAMGs). Performance of HRA is a task which is highly interactive with other PRA tasks like fault tree and event tree analysis. HRA estimates the failure probabilities of plant personnel actions identified in fault tree analysis or event tree analysis. The estimated human error probabilities are inputs to the fault tree or event tree models.

HRA addresses three types of human interactions, including actions before and after an initiating event, and actions that may cause or lead to an initiating event:

- Type A: Pre initiating event human interactions

  These actions take place before an initiating event, routine activities (e.g. test, maintenance, or calibration). If these actions are not completed correctly, the error may impact the availability of equipment necessary to perform in the system function modeling included in the PRA.

- Type B: Initiating event related human interaction

  These actions take place before an initiating event (including type A) if not completed correctly may cause an initiating event. In many cases these contributors to initiating event frequency are included in the data base and are therefore included in the quantification of the PRA. Specific Type B events are also considered in the context of the low power shutdown (LPSD) PRA model.

- Type C: Post initiating event human interaction

  These actions taking place after an initiating event are evaluated to determine the likelihood of error or conversely task completion. The operator responses required for each of the accident sequences according to procedures including the EOPs are modeled when they are risk significant and evaluated probabilistically in this analysis. Type C human interactions are categorized into type Cp and type Cr. Type Cp is the action required to operate the mitigation system, and type Cr represents the recovery actions for failed equipment, or realignment of systems.

Most of the human interactions modeled in the US-APWR PRA are type C. Analysis of type C human interactions is performed based on documented assumptions because the sufficient plant specific information on EOPs, time-related issues (time available and time

required to complete the actions specified), and HSI for advanced digital control room etc. is not fully available as the initial model is being developed. Simplified task definitions and analyses are nonetheless developed by the system analysts and to assure accuracy reviewed by the procedure developer assigned to the US-APWR project. Revised and updated evaluations of the identified operator actions and human error probabilities will be performed as additional US-APWR design information becomes available.

US-APWR HRA is performed according to the following major steps:

Step 1 - Identify the human interactions

Step 2 - Characterize human actions and develop the subtasks

Step 3 - Quantify the human error probabilities

Step 4 - Evaluate the dependency between human failure events.

Step 5 - Document the human reliability analysis results

- Identification of human interactions (Step 1 and Step 2)

  The human interactions to be explicitly modeled in the PRA are systematically identified for each human interaction type.

  - Type A human interactions

    Type A human failure events are characterized as below:

    (1) Misalignment of PRA components in its normal operational or standby status after the test and maintenance (valve misalignment, or control switch mispositioned)

    (2) Miscalibration after calibration activities

    Misalignments of components are in many cases easily detected by the plant personnel in the control room during plant operation. In addition, they are immediately corrected after detection. Therefore, there is very low probability that these rare misalignment situations and an initiating event occur at the same time. In US-APWR HRA, these kinds of type A human failure events are screened out, and not explicitly modeled in the PRA. The exclusion of type A human failure events from the PRA model and the bases for these decisions are as follows.

    a. Misalignment of the remote-operated valves (e.g. motor-operated valves, air-operated valves) after test and maintenance. Remote-operated valve open/close position is monitored in main control room.

    b. Misalignment of the pump and gas turbine generator after test and maintenance. The control switch position (auto-position, start/stop-position, and manual-position) of the pump and gas turbine generator is monitored in main control room.

c. Misalignment of the manual valves for which a flow meter is installed on the same flow line. The personnel in the main control room can monitor these manual valves open/close position by the monitoring the flow meter.

d. Misalignment of the locked-management manual valves. The probability of this error is considered to be very low because these valves are locked with correct position after the test and maintenance.

Type A human failure events that should be explicitly modeled in PRA model are searched for across all systems and components.

- Type B human interactions

  Type B human interactions are identified if it is judged that an initiating event would occur caused by the human failure event that is not already included in the data and it is therefore necessary to evaluate human error probability. In LPSD risk assessment, the initiating event of “over-drain” is caused by human failure event during plant maintenance. The identified type B human failure event in LPSD is operation failure to cause “over-drain”.

- Type C human interactions

  Type Cp human interactions are identified in event tree and fault tree analysis based on success criteria. Type Cp human interactions modeled in the PRA are considered in the event tree analysis and fault tree analysis. Type Cr human interactions are identified for the risk significant contributors if it is judged that it is possible to perform the type Cr actions in the context of the accident scenario.

• Quantification of human error probabilities (Step 3)

The design certification phase HRA provides human error probabilities (HEPs) and the analysis for Type A and Type C human interactions is based on the NUREG/CR-4772 “Accident Sequence Evaluation Program HRA Procedure” (ASEP) (Reference 19.1-27), and the HEP analysis for Type B human interactions is based on NUREG/CR-1278 “Technique for Human Error Rate Prediction” (THERP) (Reference 19.1-28) approach.

- Type A human interactions

  A basic HEP (BHEP) of 0.03 was selected as a HEP for type A human errors. The BHEP of 0.03 do not include any recovery factors (RF), and represents a combination of a generic HEP of 0.02 assessed for an error of omission (EOM) and a generic HEP of 0.01 assessed for an error of commission (ECOM), with the conservative assumption that an ECOM is always possible if an EOM does not occur. The estimated HEP that is used for PRA model considers the recovery factors and dependence effect on the BHEP.

- Type B human interactions

The probabilities of type B human failure events are estimated based on NUREG/CR-1278 (Reference 19.1-28). HEP is taken directly from NUREG/CR-1278. Optimum conditions are assumed, and any performance shaping factor (PSF) is not considered.

- Type C human interactions

The probabilities of type C human failure events are estimated based on ASEP procedure (Reference 19.1-27). The basic HEP and recovery factors by the second person who checks the performance off the original performer are given in the ASEP procedure, and they are assigned to each subtask failure of type C human failure events. The basic HEP values for Type C subtask errors are summarized in Table 19.1-18, and the recovery factors are summarized in Table 19.1-19 together with the application criteria. As shown in these two tables, a basic HEP is adjusted on the basis of “Stress Level” and “Task Type”. Modified HEP values are obtained by considering the recovery factors. An example of human error probability (HEP) quantification for “Feed and Bleed” operator action, a type C human interaction, is as follows:

HPIOO02FWBD - Feed and bleed operation failure (not involve S-signal)

The HPIOO02FWBD evaluates the probability of failure to recognize the need and failure to start the safety injection pump and open the RCS depressurization valves in a Non-LOCA event. The following assumptions are used as input to quantify the HEP of HPIOO02FWBD operator action.

- EOP Type: Symptom-oriented
- Behavior Category: Rule-based
- Task Type: Step by step
- Stress Level: Moderately high
- Recovery: Main control room (MCR) - SRO-1 and SRO-2

The HPIOO02FWBD operator action HEP quantified as follows:

Item No.	Subtask description	Basic HEP	Recovery factor		Modified HEP
		RO	SRO-1	SRO-2	
Cognition aspects					
1	Identify the loss of the secondary core cooling function	0.02	0.2	0.2	8.0E-4
Action aspects					
2	Start the safety injection pump (1 out of 4)	0.02	0.2	0.2	8.0E-4
3	Open the safety depressurization valve (1 out of 2)	0.02	0.2	0.2	8.0E-4
Total HEP = Item 1 + Item 2 + Item 3					2.4E-3 (EF=5)
Total HEP (Mean)					3.8E-3 (EF=5)

- Assessment of dependency between human failure events (Step 4)

  The dependency assessment refers to the dependency between the type C human failure events, the dependency between the type A (or B) and type C human failure events is considered to be negligible. The dependence level between human failure events in the same sequence is assessed, and a joint human error probability that reflects that dependence is calculated. All of the event trees for the US-APWR are reviewed to search the possible combinations of type C human failure events. Whenever a type C human failure event is addressed, all previous nodes addressed on the sequence are reviewed. If any previous human failure event is in the same sequence, then subsequent human failure events are considered as candidates for dependency evaluation.

  - Dependency level evaluation

    The determination process of dependency level between multiple human failure events follows the philosophy of The SPAR-H Human Reliability Analysis Method," NUREG/CR-6883 (Reference 19.1-29). This study yields the four dependency levels; low dependence, moderate dependence, high dependence, and complete dependence. The dependency level depends on following factors crew (same or different), time (close or not close), location (same or different), and cues (additional or no additional). The decision tree to determine the dependency level between multiple human failure events is shown in Figure 19.1-3. The dependency level is fundamentally determined

by the criteria of Figure 19.1-3, but if the error is the 3rd error in the sequence, then the dependency level is at least moderate, and if the error is the 4th error in the sequence, then the dependency level is at least high, and if there are more error in the sequence, then the dependency level "complete" is assigned.

- Conditional HEP evaluation

  Once the dependency levels for each case are evaluated, the basic human error probabilities without dependency "Unconditional HEP" are modified to account for the dependency for each dependency level. The conditional human error probability "Conditional HEP" is calculated by applicable equation as follows, according to NUREG/CR-1278 (Reference 19.1-28).

  Low dependency; Cond. HEP = (1 + 19 x N) / 20
  Moderate dependency; Cond. HEP = (1 + 6 x N) / 7
  High dependency; Cond. HEP = (1 + N) / 2

  Where N is the unconditional human error probabilities

Quantification

Event sequence quantification is carried out by the following steps.

Step 1: Develop a model on PRA quantification software

Core damage quantification of the US-APWR PRA uses the RiskSpectrum® PRA code (Reference 19.1-30). The purpose of this step is to incorporate the models and data into the RiskSpectrum® code and prepare the model for preliminary quantification in Step 2. This preparation includes model logic debugging and setting parameters for the quantification.

Step 2: Develop preliminary point estimate quantification

The purpose of this step is to perform a preliminary quantification to complete the debugging of model logic and input errors. A conservative screening value (0.1) is used for the human action in this preliminary quantification step.

Step 3: Perform truncation convergence analyses

The purpose of this step is to determine the appropriate level for accident sequence frequency cutoff values that achieves a balance between accuracy and efficiency of the PRA applications. The US-APWR PRA uses a truncation value of 1.0E-15.

Step 4: Define and analyze sequence groups

The purpose of this step is to determine appropriate sequence groups to ACLs which are the initial conditions for the CET and are classified by considering the similarity of core damage sequences.

Step 5: Final point estimate quantification

The purpose of this step is to incorporate revisions to the logic model from Steps 1 through 4 to effect a final point estimate quantification of each sequence and each end state identified in Step 4 with use of appropriate truncation values determined in Step 3. Sequence frequencies, function probabilities, and end state frequencies are reviewed as well as the contributing cutsets to each of these.

Step 6: Perform accident sequence frequency importance, uncertainty, and sensitivity analysis

The purpose of this step is to perform the risk importance and uncertainty analysis. The uncertainty analysis includes parameter uncertainties and selected modeling uncertainties.

Key assumptions in Level 1 PRA for operations at power

Key assumptions in Level 1 PRA for operations at power are summarized below.

- US generic data are applied for component reliability data
- The reliability of gas turbine generators adopted in US-APWR is expected to have higher reliability than current diesel generators (Reference 19.1-31). However taking into account the lack of operating experience, reliability data of diesel generators are conservatively applied to gas turbine generators
- Reliability of DAS is assumed to be equal or lower than 0.01 per demand. Complete dependency is assumed between different functions of DAS
- Probability of more than four control rods fail to insert into the core due to mechanical failure assumed as 1.0E-07 per demand
- Application software failure, which results in loss of all trains of signals and operator actions, is assumed to occur 1.0E-05 per demand. DAS is independent from application software failure
- Basic software failure, which is a failure of operation system and result in degradation of all application software, is assumed to occur 1.0E-07 per demand. Basic software failures degrade all signals and operator actions of the digital I&C system. DAS is independent from basic software failure
- US generic data are applied to component unavailability due to test and unplanned maintenance
- Surveillance test interval and refueling outages are consistent with Technical Specifications provided in Chapter 16
- Based on seal testing, RCP seal leakage is up to 0.2 gpm between 0 and 60 minutes after an SBO, but seal integrity is maintained. Thus, the RCP seal is assumed to keep its integrity for one hour without water cooling. An RCP seal LOCA with a leak rate of 480 gpm per RCP is assumed to occur one hour after

both thermal barrier and RCP seal injection function is lost. Once RCP seal LOCA occurs, core will be uncovered if RCS makeup injection is absent

- In loss of component cooling water events, non-essential chilled water system or FSS provide alternate component cooling water to charging pumps in order maintain RCP seal water injection. Operator action is necessary to supply alternate component cooling water to charging pumps

- If emergency feedwater pumps cannot feed water to two intact SGs, operators will attempt to open the cross tie-line of emergency feedwater pump discharge line in order to feed water to two SGs by one pump

- Motor-driven emergency feedwater pumps require room cooling for operation. On the other hand, turbine-driven emergency feedwater pumps are operable regardless of the availability of room cooling

- Loss of room cooling in ESF pump rooms (CS/RHR pumps and SI pumps) does not degrade the operability of the systems since room temperature increase within the mission time is tolerable

- Common cause failure between emergency power supply systems and alternate ac power supply systems (AAC) are minimized by their design characteristics. Common cause failure of gas turbine generators and circuit breakers do not occur across safety power system and AAC

- The CSS/RHRS has the function to inject the water from RWSP into the cold leg piping by switching over the CS/RHR pump lines to the cold leg piping (Alternate core cooling operation) if all safety injection systems fail. Alternate core cooling operation may be required under conditions where containment spray signal is valid. In such cases, alternate core cooling operation is prioritized over containment spray, because prevention of core damage would have higher priority than prevention of containment vessel rupture. However, in the case of Large LOCA, it is assumed that alternate core cooling is not available because of insufficient time to switch over to alternate core cooling mode

- Emergency operating procedures (EOPs) for operator actions credited in the PRA are symptom-oriented and operators are well trained and practiced against the events written in EOPs. Since the EOPs are symptom-oriented, “Cognition error”, that is diagnosis failure of abnormal events, is unlikely to occur.

- MCR crew members consist of the following team members at all times during the evolution of an accident scenario:

  - Reactor operator (RO)

  - Senior reactor operator (SRO)

  - Shift technical advisor (STA)

  The RO operates the plant during normal and abnormal situations, and SRO and STA check the action of the RO. If the RO commits an error during the operation,

SRO or STA would correct the circumstances. However, when there is not enough available time to take corrective action, recovery credit is not considered.

- For operator actions at local area (action that take place outside control room) auxiliary operators (licensed and non-licensed) are available:

  - The auxiliary operator 1

  - The auxiliary operator 2

  Normally the auxiliary operators are stational in the MCR. If the local manipulation of equipment is required to mitigate accidents or to prevent core damage, the auxiliary operator moves to the appropriate area in the reactor building or auxiliary building, to access equipment such as manual valves. It is assumed that auxiliary operator 1 operates equipment and auxiliary operator 2 checks the actions of auxiliary operator 1. If auxiliary operator 1 commits an error during the operation, auxiliary operator 2 corrects it

- Misalignment of remote-operated valves (e.g. motor-operated valves, air-operated valves), pumps and gas turbine generators after test and maintenance will be fixed before initiating events occur. Remote-operated valve open/close positions and control switch positions are monitored in the main control room, so they will be detected in a short time

- The controls and displays available in the US-APWR control room are superior to conventional control room HSIs and, therefore, human error probabilities in the US-APWR operation would be less than those in conventional plants

- US generic data is applied to the frequency of all initiating events, except loss of CCW.

- CCWS supplies cooling water to containment fan cooler units to perform alternate containment cooling. Operator action to switch from non-essential chilled water system to CCWS is necessary to achieve containment cooling.

- Action to open/close unlocked motor operated-valve is performed in series through the communication between operators in electrical room and in MCR.

- For stress level, “moderately high” and “extremely high” are applied to HEP estimation. Extremely high is applicable to operator actions performed under the software CCF event.

- The essential service water (ESW) pump motor is water-cooled in the base case. When air cooling is applied to ESW pump motor cooling, the estimation assuming operator backup to prevent room heatup in the event ESW pump room ventilation loss is performed.

19.1.4.1.2 Results from the Level 1 PRA for Operations at Power

This subsection provides the results from the Level 1 PRA for operations at power

17 separate initiating event categories are defined to accurately represent the US-APWR design. These are categorized into several events related to LOCA, secondary side break, transient and ATWS.

The US-APWR PRA developed a total of 516 potential core damage event sequences for internal initiating events at power. These core damage sequences are the combination of initiating event occurrences and subsequent successes/failures of mitigation systems/ operator actions. The failure probabilities for the modeled front line and support systems are given in Tables 19.1-20 and 19.1-21, respectively. The unreliability of EFWS under various loss-of-main feedwater transients, which is required in 10 CFR 50.34(f)(1)(ii)(A), is given in Table 19.1-20.

The total means CDF for the US-APWR is 1.0E-06/RY. The portion of each initiating event in the CDF is summarized in Table 19.1-22 and Figure 19.1-4. The conditional core damage probability (CCDP) given initiating event occurs is described in Table 19.1-23.

Table 19.1-24 shows the top 100 sequences. The list of identifiers for these sequences is shown in Table 19.1-8. As can be seen in Table 19.1-24, the top 100 sequences contribute more than 99% to the total CDF. The top 10 dominant core damage sequences account for 84% of the total CDF.

Table 19.1-23 shows that six initiating events account for approximately 91 percent of the total CDF. These events are as follows:

- Loss of offsite power (LOOP)
- Loss of component cooling water (LOCCW)
- Reactor vessel rupture (RVR)
- Small pipe break LOCA (SLOCA)
- Anticipated transient without scram (ATWS)
- Steam Line Break/Leak (Downstream MSIV: Turbine side) (SLBO)

The first two events account for 45.4% and 20.5% of the total CDF, respectively. The contribution of the other initiating events is less than 10% of the total CDF. Table 19.1-25 shows the top 40 cutsets for the total CDF. The top 10 dominant cutsets for each initiating event are provided in Table 19.1-26.

LOCA events, excluding reactor vessel rupture, dominate 10.2% of the CDF. The US-APWR features a four train safety system and in-containment RWSP, which improves the reliabilities of RCS inventory control and decay heat removal. Accordingly, frequencies of core damage scenarios that stem from LOCA events are reduced.

65% of the CDF are related with accident scenarios involving RCP seal LOCA. RCP seal LOCA may occur due to total loss of CCW, which can be caused by total loss of ac power, random failures of ESWS and CCWS after plant trip or an initiating event. If operations to provide alternate component cooling water supply to charging pumps fail, RCP seal

LOCA will occur. In such accident scenarios, safety functions to mitigate RCP LOCA are unavailable, and therefore the core will be damaged.

The dominant accident sequences (those contributing greater than 1% to CDF) are described below:

(1) LOOP with reactor trip: The emergency power supply system (emergency power generator) and alternate ac power source fail to operate and loss of total ac power occurs. EFWS (turbine-driven pumps) succeeds. Offsite power does not recover within one hour, and RCP seal LOCA occurs since RCP seal cooling and RCP seal injection is lost during loss of total ac power. In addition, functions to mitigate RCP seal LOCA are also unavailable due to loss of power. Liquid level in the RCS decreases, and two hours after initiation of RCP seal LOCA (three hours after LOOP), core is uncovered. The frequency of this sequence is 3.4E-07/RY and accounts for 33.0 % of the total CDF.

(2) LOCCW with reactor trip: EFWS successfully functions, but RCP seal LOCA occurs due to failure of the alternate component cooling of the charging pump utilizing FSS or non-essential chilled water system. In addition, functions to mitigate RCP seal LOCA are also unavailable due to loss of CCW. RCS inventory gradually decreases, and finally the core is damaged. The frequency of this sequence is 1.7E-07/RY and accounts for 16.0 % of the total CDF.

(3) Reactor vessel rupture: This event directly leads to core damage since the reactor vessel can no longer maintain RCS coolant inside. The frequency of this sequence is 1.0E-07/RY and accounts for 9.7 % of the total CDF.

(4) LOOP with reactor trip: Emergency power supply and EFWS successfully function, but CCF of CCW or ESW pumps to restart results in loss of CCWS. Alternate component cooling of charging pump utilizing FSS or non-essential chilled water system fails and eventually RCP seal LOCA occurs. In addition, functions to mitigate RCP seal LOCA are unavailable due to loss of CCW. RCS inventory gradually decreases, and finally the core is damaged. The frequency of this sequence is 9.0E-08/RY and accounts for 8.7 % of the total CDF.

(5) LOCCW with reactor trip: All safety-related equipment cooled by the CCWS (e.g., SI pumps, CS/RHR pumps and CS/RHR heat exchangers) is unavailable due to the total loss of CCW. Since the motor-driven (M/D) EFW pumps, that share cooling function with the heating, ventilation, and air conditioning (HVAC) system through ESWS are also not available, only turbine-driven (T/D) pumps are operable for cooling under the initiating event. Water in two EFW pits cannot be supplied to the SGs by available T/D pumps, and there are no cooling systems that can prevent core damage. In addition, there are no RCP seal cooling functions, which results in a RCP seal LOCA. Eventually, the core is damaged. The frequency of this sequence is 4.0E-08/RY and accounts for 3.8% of the total CDF.

(6) SLOCA with reactor trip: Decay heat removal function via the SGs is successful, but neither high head injection system (HHIS) nor CSS/RHRS are available, since the RWSP is unavailable due to plugging or leaking. There are no core cooling

systems that can inject water from the RWSP into the reactor vessel. Eventually, core damage occurs. The frequency of this sequence is 3.9E-08/RY and accounts for 3.8% of the total CDF.

(7) LOFF with reactor trip: The RCS cannot be depressurized because of the failure of both the decay heat removal function via the SGs and the manual feed and bleed (FAB) operation. The pressure in the RCS remains high, which results in the core damage. The frequency of this sequence is 2.5E-08/RY and accounts for 2.4% of the total CDF.

(8) SLBO with reactor trip: The function of secondary side cooling through the SGs is unavailable due to the failure of isolation on the break side. In addition, operators fail to manually open the safety depressurization valve (SDV), and the RCS maintains high pressure. The pressure in the RCS keeps increasing, which results in the core damage. The frequency of this sequence is 2.4E-08/RY and accounts for 2.3% of the total CDF.

(9) ATWS: Neither the DAS nor the reactor trip signal function properly, which results in the failure of the reactor and the turbine to trip, which causes the initiating event. Since core power cannot be effectively decreased, the RCS pressure exceeds the allowable RCS system pressure limit. Eventually, the core is damaged. The frequency of this sequence is 2.4E-08/RY and accounts for 2.3% of the total CDF.

(10) TRANS with reactor trip: The RCS cannot be depressurized by secondary side cooling due to the failure of the EFWS and main feedwater recovery. In addition, operators fail to manually start the SI pump and open the SDV, which is FAB operation. There are no means to depressurize the RCS, and the pressure in the primary system keeps increasing. Eventually, the core is damaged. The frequency of this sequence is 1.7E-08/RY and accounts for 1.7% of the total CDF.

(11) SLOCA with reactor trip: The RCS is depressurized by heat removal from the secondary side, but HHIS fails to operate due to CCF of the SI pumps or its support system. The RCS cannot be depressurized from the secondary side cooling, and the RCS pressure cannot be decreased down to the pressure that alternate core cooling actuates using CS/RHR pump. There is no mitigation system for core cooling, resulting in the core damage. The frequency of this sequence is 1.2E-08/RY and accounts for 1.2% of the total CDF.

(12) ATWS: The reactor trip function fails to actuate because of the rod injection failure, which results in the initiating event. One EFW train is unavailable due to a random failure or testing and maintenance, and cooling from the secondary side is insufficient. RCS pressure cannot be reduced down to allowable pressures. Immediately, the core damage occurs. The frequency of this sequence is 1.2E-08/RY and accounts for 1.2% of the total CDF.

(13) LOOP with reactor trip: The emergency power supply system functions successfully. Recovery of the CCWS prevents a RCP seal LOCA. However, the RCS cannot be depressurized, since the cooling from the primary side (FAB: manually open the SDVs and start the SI pumps) and from the secondary side

(the removal of decay heat via the SGs) is unavailable. Eventually, the core is damaged. The frequency of this sequence is 1.1E-08/RY and accounts for 1.1% of the total CDF.

The top 20 cutsets for these sequences are shown in Table 19.1-27, Table 19.1-28, Table 19.1-29 and Table 19.1-131 through Table 19.1-139. Each of the other event sequences represents less than 1% of the total CDF. Cutsets for the reactor vessel rupture event are not listed here because the initiating event is assumed to directly lead to core damage.

Importance analyses have been performed to determine the following:

- Basic event importance
- CCF importance
- Human error importance
- Component importance

The results of importance are organized by a Fussell Vesely (FV) importance and risk achievement worth (RAW). Risk significant basic events which have FV importance equal or greater than 0.005 and RAW equal or greater than 2.0 are listed in Table 19.1-30 and Table 19.1-31, respectively.

The case where the ESW pump motors are air-cooled has small impact on the PRA results because the HVAC system for the ESW pump room has high reliability due to its backup action. The system for cooling ESW pump motors is identified to be risk-significant for RAW based on importance analysis, the results of which are used as input to the reliability assurance program (RAP) in Section 17.4. The system is listed as a risk-significant SSC instead of components on the ESW pump motor water-cooling line.

The risk significant basic events with FV importance value with 0.02 or higher are as follows:

OPS----PRBF (Failure of offsite power recovery within one hour) – This basic event applies only to a condition where total loss of ac power occurs after LOOP. If offsite power does not recover within one hour, RCP seal LOCA is assumed to occur. The plant CDF is decreased by a factor of 34% if the probability of this failure is set to 0.0.

OPS---- PRCF (Failure of offsite power recovery within three hours) – This basic event applies only to condition where total loss of ac power occurs after LOOP. If offsite power does not recover within three hours, core damage is assumed to occur due to RCP seal LOCA. The plant CDF is decreased by a factor of 33% if the probability of this failure is set to 0.0.

EPSOO02RDG (Fail to connect alternate ac to Class 1E bus) – This basic event applies only to station black out (SBO) conditions where the emergency power generators have failed to supply power. If the operator fails to connect alternate ac power to Class 1E buses, total loss of ac power occurs. The plant CDF is decreased by a factor of 29% if the probability of this failure is set to 0.0.

EPSCF4DLLRGTG-ALL (CCF of Class 1E emergency power generators to run for the first hour) – This basic event applies to LOOP conditions. When all Class 1E emergency power generators fail to run, the operator will attempt to connect the alternate ac power source to the Class 1E 6.9kV switchgears. If the operator fails to connect the alternate ac power source, total loss of ac power occurs. The plant CDF is decreased by a factor of 22% if the probability of this failure is set to 0.0.

ACWOO02FS (Fail to supply alternate component cooling water from FSS) – This basic event applies to conditions where loss of CCW has occurred. If the operator fails to supply alternate component cooling water to the charging pump cooling line, RCP seal injection function is lost. Eventually, RCP seal LOCA occurs. The plant CDF is decreased by a factor of 18% if the probability of this failure is set to 0.0.

ACWOO02CT (Fail to supply alternate component cooling water from non-essential chilled water system) – This basic event applies to conditions where loss of CCW has occurred. If the operator fails to supply alternate CCW to the charging pump cooling line, RCP seal injection function is lost. Eventually, a RCP seal LOCA occurs. The plant CDF is decreased by a factor of 17%, if the probability of this failure is set to 0.0.

EFWOO01006AB (Fail to changeover EFW pit) – This basic event applies to the condition where one side (failure of A and B trains or C and D trains) of the EFWS has failed. Each EFW pit has 50% capacity. When the EFWS on one side is not available, operators attempt to supply water to the EFW pit on the other available side after the water level in the EFW pit indicates low. If the operators fail to changeover the EFW pit, the decay heat removal function for the secondary side will be lost. The plant CDF is decreased by a factor of 5.2%, if the probability of this failure is set to 0.0.

EPSCF4DLADGTG-ALL (CCF of Class 1E emergency power generation to start) – This basic event applies to a LOOP condition. When all Class 1E emergency power generators fail to start, the operators attempt to connect the alternate ac power source to Class 1E 6.9kV switchgears A and D. If the operators fail to connect the alternate ac power source after the CCF, a total loss of ac power will occur. The plant CDF is decreased by a factor of 4.6%, if the probability of this failure is set to 0.0.

HPIOO02FWBD (Failure of feed and bleed operation not involving ECCS actuation signal) – This basic event applies to conditions where the secondary side cooling function has been lost, and not involving the ECCS actuation signal. When secondary side cooling is not available, the operators attempt to manually start the SI pump and open the SDVs for RCS depressurization (feed and bleed operation). If the operators fail, the RCP pressure will remain high. The plant CDF is decreased by a factor of 4.2%, if the probability of this failure is set to 0.0.

RWSCF4SUPR001-ALL (CCF of ESS/CS strainer plug during operation) – This basic event applies to the loss of the HHIS and CSS/RHRS. These systems are shared with the RWSP through the ESS/CS strainers. If the strainers are plugged, these mitigation systems become unavailable. The plant CDF is decreased by a factor of 3.9%, if the probability of this failure is set to 0.0.

SGNBTSWCCF2 (CCF of group-2 application software) – This basic event applies to the operation of systems important to safety. If this software CCF occurs, the safety-

related signals, excluding the signals related to SG water level, and opertor actions will not be actuated. Systems important to safety, such as HHIS and CSS/RHRS become inoperable. The plant CDF is decreased by a factor of 3.7%, if the probability of this failure is set to 0.0.

EPSCF4DLSRGTG-ALL (CCF of Class 1E emergency power generation to run for the first hour) – This basic event applies to LOOP conditions. When all Class 1E emergency power generators fail to run, the operators attempt to connect the alternate ac power source to Class 1E 6.9kV switchgears A and D. If the operators fail to connect the alternate ac power source after the CCF, a total loss of ac power will occur. The plant CDF is decreased by a factor of 3.4%, if the probability of this failure is set to 0.0.

RTPDASF (Failure of diverse actuation system) – This basic event applies to the loss of the DAS. If a DAS failure occurs, safety-related equipment (e.g., reactor trip, SI pump, SDV, EFW pump) will be unavailable. The plant CDF is decreased by a factor of 3.0%, if the probability of this failure is set to 0.0.

SGNBTHWCCF (CCF of safety-related I&C hardware) – This basic event applies to safety related I&C hardware, which includes reactor protection system (RPS), engineered safety feature actuation system (ESFAS) and safety logic system (SLS). If the hardware CCF occurs, safety-related signals will not operate. The plant CDF is decreased by a factor of 2.9%, if the probability of this failure is set to 0.0.

EFWPTAD001A (Failure of turbine-driven EFW pump to start) – This basic event applies to conditions where the T/D EFW pump fails to start. If the M/D EFW pump in the same train (i.e., B-EFW pump) is inoperable, the operators perform a changeover to the EFW pit. The plant CDF is decreased by a factor of 2.2%, if the probability of this failure is set to 0.0.

EPSCF2DLLRDGTG-ALL (CCF of AAC to run) – This basic event applies to LOOP conditions. When all Class 1E emergency power generators fail to operate, the operators attempt to connect the AACs to Class 1E 6.9kV switchgears A and D. If, AACs fail to run, a total loss of ac power will occur. The plant CDF is decreased by a factor of 2.1%, if the probability of this failure is set to 0.0.

HPIOO02FWBD-S (Failure of feed and bleed operation involving ECCS actuation signal) – This basic event applies to a condition where the secondary side cooling function has been lost, involving the ECCS actuation signal. When secondary side cooling is not available, the operators attempt to manually open the SDVs for RCS depressurization (bleed operation). If the operators fail, RCP pressure will remain high. The plant CDF is decreased by a factor of 2.1%, if the probability of this failure is set to 0.0.

The risk significant basic events with RAW values with 100 or higher in which the basic events of external leaking of piping are excluded and the CCF basic events that represent various combination are treated as one basic event, are as follows:

RTPCRDF (Rod injection failure of more than four rods mechanical failure of the control rod driving mechanism) – The plant CDF would increase approximately 1.7E+05 times if the probability of this failure were set to 1.0. If more than four control

rods fail to drop into the core, control rods cannot provide sufficient negative reactivity to trip the plant.

RTPBTSWCCF (CCF of basic software) – The plant CDF would increase approximately 4.6E+04 times if the probability of this failure were set to 1.0. The importance of this failure is due to loss of all digital instruments which will result in failure of operator actions and various automatic signals such as plant trip signal or ECCS actuation signal.

SGNBTHWCCF (CCF of safety related I&C hardware) – The plant CDF would increase approximately 1.4E+04 times if the probability of this failure were set to 1.0. The importance of this failure is due to loss of all trains of the plant safety and monitoring system which will result in failure of operator actions and various safety related signals such as plant trip signal or ECCS actuation signal.

EPSCF4CBSC52UAT-ALL (CCF of all incoming breakers from the unit auxiliary transformer) – The plant would increase approximately 8.5E+03 times if the probability of this failure were set to 1.0. If this the incoming breakers all spuriously close after LOOP, Class 1E 6.9kV switchgears cannot be supplied power since the switchgears are not isolated from the faulted offsite power. Accordingly, loss of total ac power will occur.

EPSCF4CBSC52RAT-ALL (CCF of all incoming breakers from the reserve auxiliary transformer) – The plant would increase approximately 8.5E+03 times if the probability of this failure were set to 1.0. If this the incoming breakers all spuriously close after LOOP, Class 1E switchgears cannot be supplied power since the switchgears are not isolated from the faulted offsite power. Accordingly, loss of total ac power will occur.

SWSCF4PMYR-FF (CCF of ESW pumps to run for the operation) – The plant CDF would increase approximately 6.2E+03 times if the probability of this failure were set to 1.0. If all ESW pumps fail to run, total loss of CCW will occurs. In addition to loss of CCW cooling, HVAC system for M/D EFW pump room is unavailable.

EPSCF4CBSO52STH-ALL (CCF of breakers between Class 1E 6.9 kV bus and Class 1E transformer spurious opening) – The plant CDF would increase approximately 6.1E+03 times if the probability of this failure were set to 1.0. If these breakers spuriously open, Class 1E 480V load centers and motor control centers will not be supplied power and are unavailable.

EPSCF4CBSO52STL-ALL (CCF of Breakers between Class 1E transformer and Class 1E 480V load center spurious opening) – The plant CDF would increase approximately 6.1E+03 times if the probability of this failure were set to 1.0. If these breakers spuriously open, Class 1E 480V load centers and motor control centers will not be supplied power and are unavailable.

CWSCF4RHPR-FF (CCF of CCW heat exchanger plug and foul) – The plant CDF would increase approximately 5.8E+03 times if the probability of this failure were set to 1.0. If this CCF occurs, no safety-related systems cooled by CCWS (e.g., HHIS and CSS/RHRS) are operable.

CWSCF4PCYR-FF (CCF of CCW pumps to run for the operation) – The plant CDF would increase approximately 5.8E+03 times if the probability of this failure were set to

1.0. If all CCW pumps fail to run, CCWS will be unavailable, no safety-related systems cooled by CCWS (e.g., HHIS and CSS/RHRS) are operable.

EPSCF4CBSO52LC-ALL (CCF of breakers between Class 1E 480V load center and Class 1E 480V motor control center spurious opening) – The plant CDF would increase approximately 4.6E+03 times if the probability of this failure were set to 1.0. If these breakers spuriously open, Class 1E motor control centers cannot be supplied power and are unavailable.

RWSCF4SURP001-ALL (CCF of ESS/CS strainer plug during operation) – The plant CDF would increase approximately 4.0E+03 times if the probability of this failure were set to 1.0. If this CCF occurs, there are no available systems that share with RWSP through ESS/CS strainers (i.e., HHIS and CSS/RHRS).

RWSXVEL001 (External leak of RWSP outlet line manual valve) – The plant CDF would increase approximately 4.0E+03 times if the probability of this failure were set to 1.0. The failure mode causes the loss of systems that share with RWSP (i.e., HHIS and CSS/RHRS).

RWSXVEL024 (External leak of RWSP return line manual valve) – The plant CDF would increase approximately 4.0E+03 times if the probability of this failure were set to 1.0. The failure mode causes the loss of systems that share with RWSP (i.e., HHIS and CSS/RHRS).

RWSCVEL023 (External leak of RWSP return line check valve) – The plant CDF would increase approximately 4.0E+03 times if the probability of this failure were set to 1.0. The failure mode causes the loss of systems that share with RWSP (i.e., HHIS and CSS/RHRS).

RWSMVEL002 (External leak of RWSP outlet line motor-operated valve) – The plant CDF would increase approximately 4.0E+03 times if the probability of this failure were set to 1.0. The failure mode causes the loss of systems that share with RWSP (i.e., HHIS and CSS/RHRS).

RWSTNEL001 (External leak of RWSP) – The plant CDF would increase approximately 4.0E+03 times if the probability of this failure were set to 1.0. The failure mode causes the loss of systems that share with RWSP (i.e., HHIS and CSS/RHRS).

HPIMVEL001A/B/C/D (External leak of SI pump inlet line motor-operated valve) – The plant CDF would increase approximately 4.0E+03 times if the probability of this failure were set to 1.0. Since the valve is installed at the exit of RWSP, the coolant drains out from the RWSP due to the valve failure. Then, the systems sharing with RWSP are unavailable.

RSSMVELCSS001A/B/C/D (External leak of CS/RHR pump inlet line motor-operated valve) – The plant CDF would increase approximately 4.0E+03 times if the probability of this failure were set to 1.0. Since the valve is installed at the exit of RWSP, the coolant drains out from the RWSP due to the valve failure. Then, the systems sharing with RWSP are unavailable.

SGNBTSWCCF2 (CCF of group-2 application software) – The plant CDF would increase approximately 3.7E+03 times if the probability of this failure were set to 1.0. If this software CCF occurs, safety-related signals, excluding signals related to SG water level, and operator actions will be actuated. Almost safety-related systems such as HHIS and CSS/RHRS cannot be operable.

RTPCF4AXFFRT-ALL (CCF of reactor trip breaker to open) – The plant CDF would increase approximately 1.9E+03 times if the probability of this failure were set to 1.0. If these breakers fail to operate under the DAS failure, reactor trip cannot be achieved, which results in occurrence of ATWS.

EPSCBFO52RAT-ACD (CCF of all incoming breakers A, C and D from the reserve auxiliary transformer to open) – The plant CDF would increase approximately 1.6E+03 times if the probability of this failure were set to 1.0. If these breakers fail to open after LOOP, the ac Class 1E switchgears will be isolated from the fault offsite power, which results in loss of ac power.

EPSCBFO52UAT-ACD (CCF of all incoming breakers A, C and D from the unit auxiliary transformer to open) – The plant CDF would increase approximately 1.6E+03 times if the probability of this failure were set to 1.0. If these breakers fail to open after LOOP, the ac Class 1E switchgears will be isolated from the fault offsite power, which results in loss of ac power.

RTPCF4ICYRRT7001-ALL (CCF of SG water level sensor for narrow range) – The plant CDF would increase approximately 1.5E+03 times if the probability of this failure were set to 1.0. If these sensors fail to operate, SG water level cannot be detected, resulting in failure of EFW actuation signal. In addition to the sensor failures, if pressurizer pressure sensor fails, reactor trip cannot be implemented, which results in ATWS initiating event.

EFWCF2CVOD008-ALL (CCF of EFW pit outlet line check valve to open) – The plant CDF would increase approximately 1.5E+03 times if the probability of this failure were set to 1.0. If these valves fail to open, water in EFW pit cannot be supplied to SGs.

EFWCF4CVOD012-ALL (CCF of EFW pump discharge line check valve to open) – The plant CDF would increase approximately 1.5E+03 times if the probability of this failure were set to 1.0. If these valves fail to open, water in EFW pit cannot be supplied to SGs.

EFWCF4CVOD018-ALL (CCF of EFW isolation check valve to open) – The plant CDF would increase approximately 1.5E+03 times if the probability of this failure were set to 1.0. If these valves fail to open, water in EFW pit cannot be supplied to SGs regardless of operation for opening EFW tie-line valves.

EFWCF4MVFC017-ALL (CCF of EFW control valve to control) – The plant CDF would increase approximately 1.5E+03 times if the probability of this failure were set to 1.0. If these valves fail to control, adequate flow rate of emergency feedwater cannot be supplied to SGs.

EFWXVEL006A/B (External leak of secondary tank outlet manual valve) – The plant CDF would increase approximately 1.5E+03 times if the probability of this failure were set to 1.0. The failure mode causes the loss of function that water in EFW pit is supplied to SGs.

EPSCF4CBSO72DB-124/234 (CCF of breakers A, B and D/A, C and D between Class 1E battery and dc switchboard spurious opening) – The plant CDF would increase approximately 1.0E+03 times if the probability of this failure were set to 1.0. The breaker failure under the condition where dc switchboard cannot be supplied power causes loss of dc power.

EPSCF4BYFFBAT-134/123 (CCF of Class 1E battery A, B and D/A, C and D to operate) – The plant CDF would increase approximately 1.0E+03 times if the probability of this failure were set to 1.0. The battery failure under the condition where dc switchboard cannot be supplied power causes loss of dc power.

ACCCF4CVOD103-ALL (CCF of accumulator injection line check valve 2 to open) – The plant CDF would increase approximately 4.9E+02 times if the probability of this failure were set to 1.0. If these valves fail to open, all accumulator injection systems are unavailable.

ACCCF4CVOD102-ALL (CCF of accumulator injection line check valve 1 to open) – The plant CDF would increase approximately 4.9E+02 times if the probability of this failure were set to 1.0. If these valves fail to open, all accumulator injection systems are unavailable.

SWSCF4PMBD001-R-ALL (CCF of ESW pump to re-start) – The plant CDF would increase approximately 3.3E+02 times if the probability of this failure were set to 1.0. If these pumps fail to re-start after LOOP, ESWS will be unavailable, which leads to total loss of CCW system. In addition, if the operators fail to establish alternate CCW for RCP seal cooling, RCP seal LOCA will occur, which leads to the core damage.

CWSCF4PCBD001-R-ALL (CCF of CCW pump to re-start) – The plant CDF would increase approximately 3.3E+02 times if the probability of this failure were set to 1.0. If these pumps fail to re-start after LOOP, CCWS will be unavailable, which leads to total loss of CCW system. In addition, if the operators fail to establish alternate CCW for RCP seal cooling, RCP seal LOCA will occur, which leads to the core damage.

SWSCF4CVOD602-R-ALL (CCF of ESW pump supply line check valve to re-open) – The plant CDF would increase approximately 3.2E+02 times if the probability of this failure were set to 1.0. If these valves fail to re-open after LOOP, ESWS will be unavailable due to the loss of cooling function for ESW pump, which leads to total loss of CCW system. In addition, if the operators fail to establish alternate CCW for RCP seal cooling, RCP seal LOCA will occur, which leads to the core damage. These valves are identified as risk-significant components in the case where the ESW pump motor is water-cooled. In the case where the motor is air-cooled, the valves are not installed.

SWSCF4CVOD502-R-ALL (CCF of ESW pump discharge line check valve to re-open) – The plant CDF would increase approximately 3.2E+02 times if the probability of this failure were set to 1.0. If these valves fail to re-open after LOOP, ESWS that removes

heat via CCW heat exchanger will be unavailable, which leads to total loss of CCW system. In addition, if the operators fail to establish alternate CCW for RCP seal cooling, RCP seal LOCA will occur, which leads to the core damage.

CWSCF4CVOD016-R-ALL (CCF of CCW pump discharge line check valve to re-open) – The plant CDF would increase approximately 3.2E+02 times if the probability of this failure were set to 1.0. If these valves fail to re-open, function of CCW system will be lost, which leads to total loss of CCW system. In addition, if the operator fails to establish alternate CCW for RCP seal cooling, RCP seal LOCA will occur, which leads to the core damage.

EPSCF4DLLRGTG-ALL (CCF of Class 1E emergency power generators to run after first hour) – The plant CDF would increase approximately 2.2E+02 times if the probability of this failure were set to 1.0. If all Class 1E GTGs fail to run after LOOP, operators attempt to connect alternate ac power source to Class 1E 6.9kV switchgears for the ac power recovery. The failure of operator action will cause the total loss of ac power.

EPSCF4DLADGTG-ALL (CCF of Class 1E emergency power generators to start) – The plant CDF would increase approximately 2.2E+02 times if the probability of this failure were set to 1.0. If all Class 1E GTGs fail to start after LOOP, operators attempt to connect alternate ac power source to Class 1E 6.9kV switchgears for the ac power recovery. The failure of operator action will cause the total loss of ac power.

EPSCF4DLSRGTG-ALL (CCF of Class 1E emergency power generators to run during first hour) – The plant CDF would increase approximately 2.2E+02 times if the probability of this failure were set to 1.0. If all Class 1E GTGs fail to run after LOOP, operators attempt to connect alternate ac power source to Class 1E 6.9kV switchgears for the ac power recovery. The failure of operator action will cause the total loss of ac power.

EPSCF4SEFFGTG-ALL (CCF of Class 1E emergency power generators sequencer to operate) – The plant CDF would increase approximately 2.2E+02 times if the probability of this failure were set to 1.0. If all Class 1E GTGs fail to operate after LOOP, operators attempt to connect alternate ac power source to Class 1E 6.9kV switchgears for the ac power recovery. The failure of operator action will cause the total loss of ac power.

EPSCF4CBFC52EPS-ALL (CCF of breakers between Class 1E 6.9kV bus and Class 1E emergency generator to close) – The plant CDF would increase approximately 2.2E+02 times if the probability of this failure were set to 1.0. If these breakers fail to close, operators attempt to connect alternate ac power source to Class 1E 6.9kV switchgears for the ac power recovery. The failure of operator action will cause the total loss of ac power.

EPSCF4CBSO52EPS-ALL (CCF of breakers between Class 1E 6.9kV bus and gas turbine generator spurious opening) – The plant CDF would increase approximately 2.2E+02 times if the probability of this failure were set to 1.0. If these breakers spuriously open during GTG operation, operators attempt to connect alternate ac power source to

Class 1E 6.9kV switchgears for the ac power recovery. The failure of operator action will cause the total loss of ac power.

EPSCF4IVFFIBC-ALL (CCF of UPS units to operate) – The plant CDF would increase approximately 2.2E+02 times if the probability of this failure were set to 1.0. If UPS units fail to operate while power is not supplied to I&C panelboard through I&C transformer, I&C panelboard will be not available, which results in the loss of I&C system such as ECCS actuation signal or containment spray signal.

EPSCF4CBSO52UA-ALL (CCF of breakers between UPS unit and I&C panelboard spurious opening) – The plant CDF would increase approximately 2.1E+02 times if the probability of this failure were set to 1.0. If these breakers spuriously open while power is not supplied to I&C panelboard through I&C transformer, I&C panelboard will be not available, which results in the loss of I&C system such as ECCS actuation signal or containment spray signal.

EPSCF4CBSO72AU-ALL (CCF of breakers between dc switchboard and UPS unit spurious opening) – The plant CDF would increase approximately 2.1E+02 times if the probability of this failure were set to 1.0. If these breakers spuriously open while UPS unit is not supplied power from Class 1E 480V motor control center, UPS unit will not be operable.

HPIPMEL001A/B/C/D (External leak of SI pump) – The plant CDF would increase approximately 1.6E+02 times if the probability of this failure were set to 1.0. This valve mode causes the loss of core injection function by HHIS.

RSSPMEL001A/B/C/D (External leak of CS/RHR pump) – The plant CDF would increase approximately 1.6E+02 times if the probability of this failure were set to 1.0. This valve mode causes the loss of heat removal function by CSS/RHRS.

RSSRIEL001A/B/C/D (External leak of CS/RHR) – The plant CDF would increase approximately 1.6E+02 times if the probability of this failure were set to 1.0. This valve mode causes the loss of heat removal function by CSS/RHRS.

RSSXVEL013A/B/C/D (External leak of CS/RHR pump mini-flow line manual valve) – The plant CDF would increase approximately 1.6E+02 times if the probability of this failure were set to 1.0. This valve mode causes the loss of heat removal function by CSS/RHRS.

RSSCVEL004A/B/C/D (External leak of CS/RHR pump suction line check valve) – The plant CDF would increase approximately 1.6E+02 times if the probability of this failure were set to 1.0. This valve mode causes the loss of heat removal function by CSS/RHRS.

CFACVEL012 (External leak of FSS line check valve) – The plant CDF would increase approximately 1.6E+02 times if the probability of this failure were set to 1.0. This valve connects fire suppression system to CSS/RHRS in B train. This valve mode causes the loss of heat removal function by CSS/RHRS in only B train.

RSSXVEL034A/D (External leak of SFP inlet line manual valve) – The plant CDF would increase approximately 1.6E+02 times if the probability of this failure were set to 1.0. Since these valves are installed in A and D CSS/RHRS, the valve mode causes the loss of heat removal function by CSS/RHRS in A and D train.

RSSXVEL031A/D (External leak of SPF return line manual valve) – The plant CDF would increase approximately 1.6E+02 times if the probability of this failure were set to 1.0. Since these valves are installed in A or D CSS/RHRS, the valve failure causes the loss of heat removal by CSS/RHRS in A or D train.

RSSXVEL002A/B/C/D (External leak of containment spray injection line manual valve) – The plant CDF would increase approximately 1.6E+02 times if the probability of this failure were set to 1.0. The valve failure causes the loss of heat removal by CSS/RHRS.

RSSMVEL004A/B/C/D (External leak of containment spray injection line motor-operated valve) – The plant CDF would increase approximately 1.6E+02 times if the probability of this failure were set to 1.0. The valve failure causes the loss of heat removal by CSS/RHRS.

HPICVEL004A/B/C/D (External leak of SI pump discharge line check valve) – The plant CDF would increase approximately 1.6E+02 times if the probability of this failure were set to 1.0. The valve failure causes the loss of core injection by HHIS.

RWSMVEL004 (External leak of RWSP outlet line motor-operated valve [outside containment]) – The plant CDF would increase approximately 1.6E+02 times if the probability of this failure were set to 1.0. Water in RWSP will drain out due to the valve failure. Then, the mitigation systems that utilize the RWSP (i.e., HHIS and CSS/RHRS) are lost.

HPIMVEL009A/B/C/D (External leak of SI pump discharge line motor-operated valve) – The plant CDF would increase approximately 1.6E+02 times if the probability of this failure were set to 1.0. The valve failure causes the loss of core injection by HHIS.

RSSMVEL021A/B/C/D (External leak of CS/RHR pump discharge line isolation valve) – The plant CDF would increase approximately 1.6E+02 times if the probability of this failure were set to 1.0. The valve failure causes the loss of heat removal function by CSS/RHRS.

RSSAVEL021/023/031/033 (External leak of CS/RHR heat exchanger bypass line air-operated valve) – The plant CDF would increase approximately 1.6E+02 times if the probability of this failure were set to 1.0. Since these valves are installed in B or C train, the valve failure causes the loss of CSS/RHR in B or C train.

RWSPMEL001A/B (External leak RWR pump) – The plant CDF would increase approximately 1.6E+02 times if the probability of this failure were set to 1.0. Water in RWSP drains out due to the valve failure and RWSP is unavailable. Then, the mitigation systems that share with RWSP (i.e., HHIS and CSS/RHRS) are lost.

RWSXVEL103A/B (External leak of spent fuel pit SFP demineralizer return line manual valve) – The plant CDF would increase approximately 1.6E+02 times if the probability of this failure were set to 1.0. Water in RWSP drains out due to the valve failure and RWSP is unavailable. Then, the mitigation systems that share with RWSP (i.e., HHIS and CSS/RHRS) are lost.

RWSXVEL066A/B (External leak of CCW surge tank return line manual valve) – The plant CDF would increase approximately 1.6E+02 times if the probability of this failure were set to 1.0. Water in RWSP drains out due to the valve failure and RWSP is unavailable. Then, the mitigation systems that share with RWSP (i.e., HHIS and CSS/RHRS) are lost.

RWSXVEL006A/B (External leak of RWR pump suction line manual valve) – The plant CDF would increase approximately 1.6E+02 times if the probability of this failure were set to 1.0. Water in RWSP drains out due to the valve failure and RWSP is unavailable. Then, the mitigation systems that share with RWSP (i.e., HHIS and CSS/RHRS) are lost.

RWSXVEL013A/B (External leak of RWR pump discharge line manual valve) – The plant CDF would increase approximately 1.6E+02 times if the probability of this failure were set to 1.0. Water in RWSP drains out due to the valve failure and RWSP is unavailable. Then, the mitigation systems that share with RWSP (i.e., HHIS and CSS/RHRS) are lost.

RWSXVEL021 (External leak of RWSP return line manual valve) – The plant CDF would increase approximately 1.6E+02 times if the probability of this failure were set to 1.0. Water in RWSP drains out due to the valve failure and RWSP is unavailable. Then, the mitigation systems that share with RWSP (i.e., HHIS and CSS/RHRS) are lost.

RWSXVEL028 (External leak of SFP return line manual valve) – The plant CDF would increase approximately 1.6E+02 times if the probability of this failure were set to 1.0. Water in RWSP drains out due to the valve failure and RWSP is unavailable. Then, the mitigation systems that share with RWSP (i.e., HHIS and CSS/RHRS) are lost.

RWSXVEL005 (External leak of RWR pump suction line tie-line manual valve) – The plant CDF would increase approximately 1.6E+02 times if the probability of this failure were set to 1.0. Water in RWSP drains out due to the valve failure and RWSP is unavailable. Then, the mitigation systems that share with RWSP (i.e., HHIS and CSS/RHRS) are lost.

RWSXVEL014 (External leak of RWR pump discharge line tie-line manual valve) – The plant CDF would increase approximately 1.6E+02 times if the probability of this failure were set to 1.0. Water in RWSP drains out due to the valve failure and RWSP is unavailable. Then, the mitigation systems that share with RWSP (i.e., HHIS and CSS/RHRS) are lost.

RWSXVEL101 (External leak of RWSAT auxiliary tank discharge line manual valve) – The plant CDF would increase approximately 1.6E+02 times if the probability of this failure were set to 1.0. Water in RWSP drains out due to the valve failure and RWSP is

unavailable. Then, the mitigation systems that share with RWSP (i.e., HHIS and CSS/RHRS) are lost.

RWSCVEL037 (External leak of containment vessel coolant drain pump (CVDP) inlet line check valve) – The plant CDF would increase approximately 1.6E+02 times if the probability of this failure were set to 1.0. Water in RWSP drains out due to the valve failure and RWSP is unavailable. Then, the mitigation systems that share with RWSP (i.e., HHIS and CSS/RHRS) are lost.

RWSCVEL012A/B (External leak of RWR pump discharge line check valve) – The plant CDF would increase approximately 1.6E+02 times if the probability of this failure were set to 1.0. Water in RWSP drains out due to the valve failure and RWSP is unavailable. Then, the mitigation systems that share with RWSP (i.e., HHIS and CSS/RHRS) are lost.

RWSCVEL027 (External leak of SFP return line check valve) – The plant CDF would increase approximately 1.6E+02 times if the probability of this failure were set to 1.0. Water in RWSP drains out due to the valve failure and RWSP is unavailable. Then, the mitigation systems that share with RWSP (i.e., HHIS and CSS/RHRS) are lost.

RWSCVEL065A/B (External leak of CCW surge tank return line manual valve) – The plant CDF would increase approximately 1.6E+02 times if the probability of this failure were set to 1.0. Water in RWSP drains out due to the valve failure and RWSP is unavailable. Then, the mitigation systems that share with RWSP (i.e., HHIS and CSS/RHRS) are lost.

RSSCF4PMAD001-ALL (CCF of CS/RHR pump to start) – The plant CDF would increase approximately 1.4E+02 times if the probability of this failure were set to 1.0. If the CS/RHR pumps fail to start after detection of containment spray actuation signal, containment spray and alternate core cooling functions are unavailable.

RSSCF4PMSR001-ALL (CCF of CS/RHR pump to run during first hour) – The plant CDF would increase approximately 1.4E+02 times if the probability of this failure were set to 1.0. If the CS/RHR pumps fail to run, containment spray and alternate core cooling functions are unavailable.

RSSCF4CVOD004-ALL (CCF of CS/RHR pump suction line valves to open) – The plant CDF would increase approximately 1.4E+02 times if the probability of this failure were set to 1.0. If these valves fail to open, water in RWSP cannot be supplied to all four CS/RHR pumps. Then, the containment spray and alternate core cooling functions are unavailable.

RSSCF4PMLR001-ALL (CCF of CS/RHR pump to run after first hour) – The plant CDF would increase approximately 1.4E+02 times if the probability of this failure were set to 1.0. If the CS/RHR pumps fail to run, containment spray and alternate core cooling functions are unavailable.

RSSCF4MVOD145-ALL (CCF of CS/RHR heat exchanger cooling line motor-operated valve to open) – The plant CDF would increase approximately 1.4E+02 times if the probability of this failure were set to 1.0. If these valves fail to open after detection of

both ECCS actuation signal and CCW pump start signal, function of heat removal through CS/RHR heat exchanger will be lost, which will results in loss of CSS/RHRS.

Common-cause importance

The ten most risk-important common cause basic events are given in Table 19.1-32 for FV importance and in Table 19.1-33 for a RAW.

The most significant CCF basic event based on FV importance is CCF of all Class 1E gas turbine generators to run. The second most significant CCF basic event is CCF of all emergency power generators to start.

The top nine most significant CCF basic events based on the RAW are the same as the basic events ranked in top ten most significant basic events based on the RAW.

Human error importance

The ten most risk-important human error basic events are given in Table 19.1-34 for FV importance and in Table 19.1-35 for RAW.

The most significant human error basic event based on FV importance is **EPSOO02RDG (Fail to connect alternate ac power source)**, with a FV importance of 2.9E-01..

Nine human error basic events have a RAW larger than 2.0E+00. The most significant human error basic event based on RAW is **ACWOO02FS (Fail to supply alternate component cooling water from FSS)**, with a RAW of 1.7E+01. The plant CDF would increase approximately 17 times, if the probability of this failure were set to 1.0.

Component importance

The ten most risk-important hardware single failure events are given in Table 19.1-36 for FV importance and in Table 19.1-37 for RAW.

Two single failure basic events have a FV importance greater than 2.0E-02. The most significant single failure based on FV importance is EFWPTAD001A, which represents the failure of T/D EFW pump to start, with a FV importance of 2.2E-02.

There are more than 500 basic events for hardware single failure that have a RAW greater than 2.0E+00. The most significant single failure basic event is a rod injection failure (RTPCRDF). The plant CDF would increase approximately 1.7E+05 times if the probability of this failure were set to 1.0.

Analysis has been performed to determine the sensitivity of CDF to the following:

- On line maintenance
- Human error rate
- Gas turbine generator reliability
- Digital I&C reliability

- Design and operation

On line maintenance

Sensitivity analysis of system unavailability is performed to study the impact of on line maintenance on plant CDF for internal initiating events at power.

- Case 1-1: One safety train out of service

  If one safety train is out of service throughout the year, the CDF is 4.4E-06/RY which is approximately four times the CDF of the base case. Increment of CDF from base line CDF is 3.4E-06/RY in this case.

- Case 1-2: One safety train and one accumulator out of service

  If one accumulator is taken out of service while one safety train is out of service, CDF will be 4.6E-06/RY. Increment of CDF from the base case CDF is 3.6E-06/RY. If this CDF increment continues 24 hours, incremental conditional core damage probability (ICDP) is 9.8E-09.

- Case 1-3: One safety train and another safety injection pump out of service

  If one safety injection pump is taken out of service while one safety train is out of service, CDF will be 5.9E-05/RY. Increment of CDF from the base case CDF is 5.8E-05/RY. If this CDF increment continues 72 hours, ICDP is 4.7E-07.

- Case 1-4: One safety train and another Class 1E gas turbine generator out of service

  If one Class 1E gas turbine generator is taken out of service while one safety train is out of service, CDF will be 7.2E-06/RY. Increment of CDF from the base case CDF is 6.2E-06/RY. If this CDF increment continues 72 hours, ICDP is 5.1E-08.

Human error rate sensitivity

Sensitivity analysis of operator action failure probabilities is performed to study the impact of human errors on plant CDF for internal initiating events at power.

- CASE 2-1: All HEPs set to 0.0

  In this sensitivity analysis, all operator actions are assumed to succeed. The resulting CDF is 3.9E-07/RY. The ratio of the sensitivity case frequency to the base frequency is approximately 0.4.

- CASE 2-2: All HEPs set to 1.0

  In this sensitivity analysis, all operator actions are assumed to fail. The resulting CDF is 1.6E-03/RY. The ratio of the sensitivity case frequency to the base frequency is approximately 1580.

- CASE 2-3: All HEPs set to mean value

In this sensitivity study, mean HEPs, rather than lower bound value, are applied for human actions that will have frequent training. The resulting CDF is 4.6E-06/RY. The CDF is 4.5 times higher than that of base case.

- CASE 2-4: Higher dependency level between operator actions

  This sensitivity study evaluates impact of setting higher dependency level between operator actions, which assumes that changing window on display is not effective. That is, dependency level is considered to be performed in the same location. The CDF is 1.0E-06/RY, which is 2% higher than the base case CDF.

Gas turbine generator reliability

Sensitivity analysis of gas turbine generator reliability is performed to study the impact of its uncertainty on plant CDF for internal initiating events at power.

- CASE 3-1: Common cause failure of gas turbine generators

  In this sensitivity analysis, CCF parameters of general components are applied to gas turbine generators. In the base case, CCF parameters of diesel generators are applied to gas turbine generators. In this case, CCF parameters based on the generic prior reported NUREG/CR-5485 is applied to gas turbine generators. The resulting CDF is 7.8E-07/RY. This CDF is 24% lower than the base case CDF.

- CASE 3-2: Gas turbine generator failure data

  In this sensitivity analysis, generic failure data of gas turbine generators reported are applied. In the base case, failure data of diesel generators are applied to gas turbine generators based on judgment that gas turbine generators of US-APWR has higher reliability than current diesel generators. In this case, reliability data of gas turbine generators reported in NUREG/CR-6829 is applied to safety and non-safety gas turbine generators. The resulting CDF is 1.3E-06/RY. This CDF is 30% higher than the base case CDF.

Digital I&C reliability

Sensitivity analysis of digital I&C software reliability is performed to study the impact of its uncertainty on plant CDF for internal initiating events at power.

- CASE 4-1: Common cause failure of application software.

  The base case assumes that application software CCF of safety system (i.e., PSMS) is 1.0E-05/demand. Since this probability has high uncertainty, sensitivity analyses concerning software CCF have been performed.

  In this sensitivity analysis, CCF probability of application software used for operator actions and all signals, excluding that of the alternate ac power (AAC) system, is independent and has no diversity. Application software CCF will therefore result in failure of operator actions and all signals modeled in the PRA besides that of the AAC. Three cases listed below were considered as part of the sensitivity analysis.

Case1: Application software CCF = 2.0E-05 /demand

If application software CCFs are assumed to occur 2.0E-05 /demand, which is twice the value considered in the base case, the resulting CDF is 1.1E-06/RY. This value is 3.9% higher than the base case CDF.

Case 2: Application software CCF = 5.0E-05 /demand

If application software CCFs are assumed to occur 5.0E-05 /demand, the CDF is 1.2E-06/RY, which is 16% higher than the base case CDF.

Case 3: Application software CCF = 1.0E-04 /demand

If application software CCFs are assumed to occur 1.0E-04 /demand, the CDF is 1.4E-06/RY, which is 34% higher than the base case CDF.

Results of sensitivity analyses show that if the probability of software CCF that results in failure of all safety related signals operator actions and modeled in the PRA occur with a probability of 1.0E-04 /demand, which is ten times higher than the application software CCF probability assumed in the base case, the CDF is 1.4E-06/RY. This value is approximately 1.3 times the base case CDF.

- CASE 4-2: Technical Specification requirements on I&C systems

  In the US-APWR Technical Specifications (TS), the Completion Time (CT), surveillance frequency, and bypass time for the protection and safety monitoring system (PSMS) are different from those of the Westinghouse Owners Group Standard Technical Specifications (STS) (Reference 19.1-51, 19.1-52). TS requirements have influence on the unavailability of each equipment and modules that constitute the PSMS and hence influence the PRA results. Sensitivity analyses have been performed to evaluate the changes in CDF associated with the variables of TS requirements regarding PSMS. If the STS requirements were to be applied for the PSMS, the CDF from internal events would be 9.9E-07/RY. Changes of TS requirements for PSMS and reactor trip system from the STS to the current US-APWR TS results in 3.2E-08/RY increase to the internal events CDF, which is approximately a 3% increase. TS changes have only a small impact on risk.

- CASE 4-3: Common cause failure of application software between safety related signals and AAC

  US-APWR is designed to minimized common cause failure between Class 1E GTGs and non-Class 1E GTGs (i.e., AACs) . In this sensitivity analysis, common application software is used for both Class 1E GTGs and AACs. The CDF is 1.5E-06/RY, which is 48% higher than the base case CDF. The characteristic design for US-APWR is effective to reduce risk depending on the power supply in LOOP event.

- CASE 4-4: Common cause failure of basic software

The base case assumes that basic software CCF probability is 1.0E-07/demand. Given the high uncertainty for this CCF probability, sensitivity analyses concerning basic software CCFs were performed to study the impact on CDF.

Case 1: Basic software CCF = 2.0E-07/demand

If basic software CCF is assumed to occur 2.0E-07/demand, which is twice the value considered in the base case, the resulting CDF is 1.0E-06/RY. This value is 0.5% higher than the base case CDF.

Case 2: Basic software CCF = 5.0E-07/demand

If basic software CCF is assumed to occur 5.0E-07/demand, the CDF is estimated to be 1.0E-06/RY, which is 1.9% higher than the base case CDF.

Case 3: Basic software CCF = 1.0E-06/demand

If basic software CCF is assumed to occur 1.0E-06/demand, the resulting CDF is 1.1 E-06/RY. This value is 4.3% higher than the base case CDF.

The above results show that if the probability of basic software CCF, which causes failure of all automatic signals and operator actions using PSMS and PCMS, occurs with ten times probability of base case, the resulting CDF is 1.1 E-06/RY. The result is approximately 5% higher than the base case CDF.

- CASE 4-5: Common cause failure of hardware

The base case assumes that I&C hardware CCF of safety-related I&C system (i.e., PSMS) is 2.1E-06/demand. Since this probability has high uncertainty, sensitivity analyses concerning I&C hardware CCF are performed to evaluate the potential contribution to CDF.

Case 1: Hardware CCF =5.0E-06/demand

If hardware CCF is assumed to occur 5.0E-06/demand, the resulting CDF is 1.1 E-06/RY. This value is 4.4% higher than the base case CDF.

Case 2: Hardware CCF =1.0E-05/demand

If hardware CCF is assumed to occur 1.0E-05/demand, the CDF is estimated to be 1.1E-06/RY, which is 11% higher than the base case CDF.

Case 3: Hardware CCF =2.1 E-05/demand

If hardware CCF is assumed to occur 2.1 E-05/demand, which is ten times of base case, the resulting CDF is 1.3E-06/RY. This value is 27% higher than the base case CDF.

Results of these sensitivity analyses show that if the assumption for CDF of hardware is increased by one order of magnitude (2.1E-05/demand), the resulting CDF is 1.3E-06/RY. This is 1.3 times the base case CDF. The CCF

probability of digital I&C hardware has impact on CDF and that the CCF of hardware results in the failure of all automatic signals and operator actions using PSMS.

Design and operation

Sensitivity analysis of design and operation is performed to study the impact of key design and operation on plant CDF for internal initiating events at power.

- CASE 5-1: Emergency feedwater pit capacity

  If each EFW pit, which has 50% capacity to perform cold shutdown, is enlarged to have 100% capacity to perform cold shutdown, the CDF will be 9.6E-07/RY. This CDF is 6% lower than the base case CDF.

- CASE 5-2: Operation of emergency feedwater pump discharge line cross tie-line valves

  If the emergency feedwater pump discharge line cross tie-line valves, which are opened when emergency feedwater pumps fail to supply at least two SGs, are kept closed regardless of emergency feedwater pump failures, the CDF will be 1.8E-06/RY. This CDF is 77% higher than the base case CDF.

- CASE 5-3: Common mode failure of all sump screens

  In the base case, common cause failure of sump screens are evaluated from with generic failure data and generic common cause failure parameters. Although sump screens of US-APWR are design to minimize failure due to clogging, common cause failure CCF probability of sump screen may increase at for large LOCA. In this sensitivity analysis, the probability of all four sump screens to clog at large LOCA has been assumed to be 0.0625 (=0.5^4) per demand. The resulting CDF is 1.1E-06/RY. This CDF is 8% higher than the base case CDF.

System Analysis

- CASE 6-1: Initial state of pressurizer safety valves

  In the base case, pressurizer safety valves are assumed to be open following an initiating event such as LOOP, LOCCW or PLOCW and failure of at least one of the valves to re-close leads to stuck open safety valve LOCA. Under the assumption that the RCS pressure does not exceed the actuation pressure of the PSVs followed by these initiating events, the resulting CDF is estimated to be 1.0E-06/RY, which is less than a 1% decrease in the base case CDF.

  After LOOP event, the reactor will be instantly tripped due to loss of power supply to the reactor trip breakers. Since the reactor will be tripped before heat removal function via SGs actually degrades, the RCS pressure is unlikely to increase above the pressurizer safety valve set pressure. In the LOCCW event, the operators will detect the symptom of the event, such as low pressure at pump outlet or high CCW temperature and manually trip the plant before losses of main

feedwater would occur. In most cases, the reactor would be tripped before SG cooling ability degrades.

Valve Reliability

Sensitivity analysis of valve reliability that has high FV importance and long test interval is performed to study the impact of its uncertainty on plant CDF for internal initiating events at power.

- CASE 7-1: Test Interval of Valves

  Failure probabilities of valves used in the US-APWR PRA are independent from their test intervals. The failure probability of valves reported in NUREG/CR-6928 is based on failure data of valves that have average test intervals less than 12 months. Sensitivity analyses are performed applying higher failure probabilities to valves that have FV importance higher than 2.0E-03, considering longer test intervals based on inservice testing (IST) requirements (e.g., 24 months). Valves that have high FV importance and have test intervals sufficiently longer than the NUREG data are the followings:

  - Main steam isolation valves (MSS-SMV-515A, B, C, D)
  - EFW pit outlet check valves (EFS-VLV-008A, B)
  - EFW pump outlet check valves (EFS-VLV-012A, B, C, D)
  - EFW line check valves (EFS-VLV-018A, B, C, D)
  - Safety depressurization valves (RCS-MOV-117A, B)
  - Pressurizer safety valves (RCS-SRV-120, 121, 122, 123)

  All of these valves are under control of the in-service test program and are required to be tested every 24 months except the pressure safety valves, which is tested every 60 months. Demand failure probabilities of NUREG/CR-6928 are adjusted for long test intervals, based on the mean testing interval of the NUREG data and the actual test interval of the valves. Failure probabilities were adjusted in two ways, either by assuming that 100% (Type A) or 50% (Type B) failures in the NUREG are standby failures. The resulting CDF and increment ratio are shown below.

Component Description	CDF [/RY]	
	Type A	Type B
Base Case	1.0E-06	
Main steam isolation valves	1.2E-06 (+19.6%)	1.1E-06 (+9.8%)
EFW pit outlet check valves	1.1E-06 (+5.9%)	1.1E-06 (+2.9%)
EFW pump outlet valves	1.1E-06 (+3.9%)	1.0E-06 (+2.0%)

EFW line check valves	1.1E-06 (+3.9%)	1.0E-06 (+2.0%)
Safety depressurization valves	1.0E-06 (+2.9%)	1.0E-06 (+1.0%)
Pressurizer safety valves	1.1E-06 (+6.9%)	1.1E-06 (+3.9%)

For the first case, if higher failure probability of valves considering long test interval are used, the increase of CDF is approximately 20%. For latter cases, the resulting increase in CDF is less than 10%.

The major conclusions of the importance and sensitivity analyses are:

- Basic events that are related to failure to prevent RCP seal LOCA are important.
- The CCF basic events are important individually, as well as a group with respect to plant CDF. This is expected for a plant with highly redundant safety systems.
- The CDF is 4.4E-06/RY if one safety train is out of service all year. This compares well with existing plants, even where periodic online maintenance is performed. Even if one accumulator and one safety train is out of service, the CDF is still below 1.0E-05/RY.
- If one safety train and another safety injection pump are simultaneously taken out of service, the CDF is 5.9E-05/RY. The four train safety system of the US-APWR enables to maintain CDF below a considerable value under conditions where two trains of a safety system are out of service.
- If no credit is taken for operator actions, the CDF is 1.6E-03/RY. If operator actions are assumed to succeed, the CDF is 3.9E-07/RY. In addition, if operators do not perform frequent training, the CDF is 4.6E-06/RY. CDF of US-APWR is sensitive to the reliability of operator actions.
- Reliability data of gas turbine generators does not have significant impact on CDF. If the reliability of generic gas turbine generators is applied the CDF increases 30%. However, the reliability of gas turbine generators that will be installed in US-APWR are expected to be higher than gas turbine generators currently used in nuclear plants.
- Uncertainty of the CCF parameters regarding gas turbine generators does not have significant impact on CDF. Currently, there are no generic data for CCF parameters of gas turbine generators but this issue has little impact on US-APWR PRA.
- US-APWR uses the application software CCF of 1.0E-05/demand with high uncertainty. If the unavailability of the software CCF is assumed to be 10 times of base case (i.e., 1.0E-04/demand), the estimated CDF is 1.4 times of base case CDF. The uncertainty of application software CCF has small impact on the CDF.

- Unavailability of PSMS is based on the CT, surveillance frequency and bypass time for the PSMS required by US-APWR TS. The CDF applying the STS requirements to the unavailability of the PSMS is 9.9E-07/RY. Changes of TS requirements for PSMS from the STS to US-APWR TS results in 3.2E-08/RY and the changes has insignificant impact on internal event risk.

- If common I&C system is used for both Class 1E GTGs and AACs, the CDF is increased 48%.US-APWR design enables to reduce common cause failure between the GTGs and AACs.

- If each of the emergency feedwater pit capacity is increased, the CDF is reduced 6%. Therefore increasing the capacity of EFW does not lead to significant reduction in the CDF.

- If operations to open emergency feedwater pump discharge line cross tie-line valves are not credited, the CDF increases more than 70%. Operation to open these valves when emergency feedwater pump is unavailable is important to reduce CDF.

- If the probability of all four RWSP sump strainers to clog at LLOCA is assumed to be 0.0625 (=0.5^4) per demand, the CDF is 8% higher than base case. Probability of the sump strainers to clog is less important for the CDF during at-power operation.

- Failure probability of valves used in US-APWR PRA is independent from their test intervals. The uncertainty associated with the impact of long test intervals on the failure probability of MSIVs can result in approximately 20% of the base case CDF. However, the actual impact of the increase in MSIV's failure probability is expected to be smaller since there is conservatism in the accident scenario which MSIV failure involves.

A PRA study involves many sources and types of uncertainty. Some are quantifiable and can be propagated through the model to generate an uncertainty distribution. Others deal with issues such as the state of knowledge and are difficult to quantify. Key sources of uncertainty and key assumptions made in the development of the PRA model for internal events at power are provided in next. They are identified and assessed for their impact on the results of the PRA.

The assessed areas of uncertainty include parametric uncertainty, modeling uncertainty, and completeness uncertainty.

Parametric uncertainty involves gathering information on the uncertainty associated with parametric values and propagating these through modeling formalisms. This process results in a better understanding of the variability of the mean or expected value of the distribution and the range of outcomes possible. A parametric uncertainty evaluation has been performed that propagates the uncertainty distribution through the model to produce the mean value of CDF using Monte Carlo simulation.

The result of the parametric uncertainty quantification for the total CDF is summarized in Figure 19.1-5. The mean, median, lower 5th percentile, and upper 95th percentile of the

distribution are calculated. The error factor (EF) is estimated by the square root of the ratio of the 95th percentile to the 5th percentile.

The plant CDF uncertainty range is found to be 2.9E-06/RY to 3.1E-07/RY for the 95% to 5% interval. This indicates that there is 95% confidence that the plant CDF is no greater than 2.9E-06/RY. The EF for the total CDF is 3.0.

Modeling uncertainty involves key assumptions and key decisions made in developing the model. Table 19.1-38 lists key sources of uncertainty and key assumptions made in the development of the PRA model along with a qualitative assessment of the items pertaining to modeling uncertainty.The US-APWR PRA uses various assumptions for the reliability of unique design features such as the advanced accumulators, GTGs, DAS, and digital I&C systems as well as the component configurations related to test and maintenance, operator actions, and operator training. Assumptions for running and standby trains of the CCWS and ESWS are also made in accordance with design information. The assumptions listed in Table 19.1-38 have a large uncertainty and may have a potential impact on the PRA results. Table 19.1-140 summarizes the key sources and their potential contribution to risk in the PRA, with the results of uncertainty and sensitivity analyses assuming a range of reliability values.

Completeness uncertainty is associated with the possibility of unaccounted for initiating events. Extensive effort has been put forth to identify a comprehensive set of initiating events, yet it is recognized that rare events may arise which cause plant response. Such events may not be adequately captured in the database as failure mechanisms may not be known and conditions in which they might arise have not occurred. Rare initiating events are considered in this study even if they have not occurred yet.

The insights from PRA results are following:

- The CDF for operations at power is 1.0E-06/RY which is less than that PWRs currently operating. The design features of US-APWR such as the four train safety system, independent four train electrical system, in-containment RWSP and alternate ac power source reduce the risk of core damage.

- The conditional CDF under conditions where one safety system train is out of service is below 1.0E-05/RY. Highly redundant safety system enables to maintain CDF below considerable value even when one train is out of service.

- LOCA events are not major contributors to CDF. This is due to adoption of four train safety system design and in-containment RWSP, which improves the reliabilities of RCS inventory control and decay heat removal.

- LOOP events are dominant contributors of the CDF. However, the CDF resulting from LOOP initiating event is less than 5.0E-07/RY. This is a result of the adoption of independent four train electrical system design and diverse ACC power source coping for SBO.

19.1.4.2 Level 2 Internal Events PRA for Operations at Power

A description of the Level 2 internal events PRA for operations at power including the results of the analysis is provided in the following subsections.

19.1.4.2.1 Description of the Level 2 PRA for Operations at Power

The Level 1/Level 2 interface establishes the connection between the Level 1 PRA event tree model and the Level 2 PRA event tree model, i.e. CET. This subsection describes the Level 2 PRA for operations at power beginning with ACL logic model described in Subsection 19.1.4.1.1.

The failure end states of the Level 1 PRA event trees result in ACLs that are initial conditions of the CET. ACLs are classified as a combination of (1) initiating event and primary system pressure, (2) containment intact or failed at core damage, (3) accident progression in containment, and (4) loss of support system initiating events. In total 28 ACLs are defined for the US-APWR PRA, as shown in Table19.1-10. The logic tree for ACL classification is shown in Figure 19.1-6.

The CET is developed to model each ACL and track the potential influence of accident progression in the C/V. Top events used in the CET are decided through arranging and combining those events.

The CET development considers:

- Containment failure timing that determines the characteristics of fission product release to environment in terms of the public risks
- Important phenomena in containment that may cause containment failure
- Recovery of safety system and accident management operations that may contribute to prevent containment failure

The CET consists of two portions, the CSET and the CPET. The interface between CSET and CPET is defined as PDS, which form the end states of the CSET and the initial conditions of the CPET. The CET end states result in release categories. Figure 19.1-7 illustrates the analysis process of Level 2 PRA, including the interfaces between it and the Level 1 PRA.

The CSET models the containment systems and functions that are provided to mitigate the consequences of an accident and to prevent containment failure. The CPET models the physical phenomena in containment that influence to containment failure and fission product release to the environment.

The CSET quantification is performed by the same computational code, RiskSpectrum®, employed for the Level 1 PRA event tree quantification by the linking of the CSET with the Level 1 PRA event tree model. This is done because fault trees used in the CSET are the same trees already modeled in the Level 1 PRA. Additionally, the CSET has the same support systems and HRA dependencies considered in the Level 1 PRA fault trees. These dependencies between Level 1 PRA and CSET are simultaneously modeled and

quantified by employing Riskspectrum® code. This concept is defined as the Level 1+ model, as shown in the Figure 19.1-7.

The CPET quantification is on the other hand performed by using spreadsheet models.

PDSs are defined as the initial conditions of the CPET that group similar accident sequences obtained from CSET taking into consideration core damage status, accident progression in containment, availability of mitigation features, etc.

PDSs are classified taking into consideration the following parameters that influence accident progression in containment and postulated fission product release behavior to the environment.

- Primary system pressure at RV failure

  In considering RCS depressurization after core damage, PDSs are classified as to whether primary system pressure is high, medium, or low at the time of RV failure. Primary system pressure influences the probability of temperature induced SGTR and temperature induced hot leg rupture before RV failure, and the probability of containment failure with various phenomena at RV failure.

  As primary system pressure is related to ACL, accident sequences are grouped as follows.

  1, 2, 3: Accident sequences which result in RV failure at low pressure state

  Low pressure state is defined as the state in which the primary system pressure is lower than the pressure at which high pressure melt ejection occurs upon RV failure.

  The ACLs represented by Axx are classified as this group of PDS, but other sequences except Axx which result in RCS depressurization after core damage are also included.

  4, 5, 6: Accident sequences which result in RV failure at medium pressure state

  Medium pressure state is defined as the state in which high pressure melt ejection may occur upon RV failure, but that pressure is lower than the pressure at which TI-SGTR occurs and results in containment bypass.

  The ACLs represented by Sxx are classified as this group of PDS.

  7, 8, 9: Accident sequences which result in RV failure at high pressure state

  High pressure state is defined as the state that high pressure melt ejection may occur upon RV failure, and temperature induced SGTR may occur and result in containment bypass.

The ACLs represented by Txx are classified as this group of PDS.

- Reactor cavity flooding status

  PDSs are classified as to whether water is injected into the reactor cavity before RV failure or after RV failure, or not injected. The presence of water in the reactor cavity influences the probability of ex-vessel steam explosion and the probability of direct containment heating. If water is available when RV fails, the possibility of ex-vessel steam explosion has to be considered although direct containment heating does not occur, and vice versa if water is not available when RV fails.

  Accident sequences are grouped by the reactor cavity flooding status as follows.

  1, 4, 7: Accident sequences in which water is not injected into the reactor cavity

  The ACLs represented by xxD and xxF, except the sequences in which firewater is injected directly into the reactor cavity, are classified as this group of PDS.

  2, 5, 8: Accident sequences in which water is injected into the reactor cavity after RV failure

  The ACLs represented by xxW, xxHF, except the sequences in which firewater is injected directly into the reactor cavity, are classified as this group of PDS.

  3, 6, 9: Accident sequences in which water is injected into the reactor cavity before RV failure

  The ACLs represented by xxS, xxHS, xxI and the sequences in which firewater is injected directly into the reactor cavity are classified as this group of PDS.

- Containment status at core damage

  PDSs are classified as to whether containment is intact at the time of core damage, whether containment is isolated at the time of core damage, whether containment fails prior to core damage, or whether the containment is bypassed. Containment status at core damage influences the fission product release behavior during early periods.

  Accident sequences are grouped by containment status at time of core damage as follows:

  A-H: Accident sequences in which containment is intact at the time of core damage

  The ACLs represented by xxD, xxF, xxW, xxS, xxHS, xxHF, xxI that containment is isolated at core damage are classified as this group of PDS.

I-J: Accident sequences in which containment is not isolated at the time of core damage

The ACLs represented by xxD, xxF, xxW, xxS, xxHS, xxHF, xxI, xxC that containment is not isolated at core damage are classified as this group of PDS.

K: Accident sequences in which containment fails before core damage.

The ACL represented by xxC that containment is isolated at core damage is classified as this PDS.

L: Accident sequences in which containment bypass exists.

The ACL represented by G is classified as this PDS.

- Igniter status

  PDSs are classified as to whether igniters are functional to properly control combustible gases. Igniter status influences the probability of containment failure due to combustion of highly concentrated combustible gases. This element is not considered for the sequences of containment isolation failure at core damage, containment failure before core damage, and containment bypass since combustible gases do not concentrate within containment for these three sequences.

  A-D: Accident sequences in which igniters are functional

  E-H: Accident sequences in which igniters are not functional

- CSS status

  PDSs are classified as to whether CSS is functional. CSS status influences the release of radioactive substances to the environment. This element is not considered for the sequences of containment failure before core damage since CSS is not functional for these sequences. Also, this element is not considered for the sequences of bypassed containment since CSS status has little affect on release of radioactive substances to the environment during these sequences.

  A, B, E, F, I: Accident sequences in which CSS is functional

  C, D, G, H, J: Accident sequences in which CSS is not functional

- Containment heat removal status

  PDSs are classified as to whether containment heat is removed through either the CS/RHR HX or the alternate containment cooling by containment fan cooler system. Containment heat removal status influences the possibility of containment failure due to over-pressure.

In addition, as containment heat removal status is not important for the fission product release behavior in the cases of containment isolation failure, containment failure before core damage or containment bypass at core damage, PDSs are not classified in such accident sequences.

A, C, E, G: Accident sequences in which containment heat is removed

B, D, E, H: Accident sequences in which containment heat is not removed

In total, 72 PDSs are defined for the US-APWR on the basis of the PRA through the above-explained PDS classification methodology, as the combination of (1) primary system pressure (2) reactor cavity flooding status (3) containment status at core damage (4) igniter status (5) CSS status (6) containment heat removal status. The defined PDSs are shown in Table 19.1-39.

For development of the CET, the items to be considered are the following physical phenomena and available countermeasures against severe accident.

The following are the physical phenomena that affect containment failure modes.

- RV failure
- Hydrogen mixing and combustion
- Core debris coolability
- Steam explosion (in- and ex-vessel)
- High pressure melt ejection (direct containment heating and rocket-mode RV failure)
- Temperature induced SGTR
- MCCI
- Early and late containment overpressure failure

The containment system features and human actions available to mitigate the consequences of an accident and to prevent containment failure are as follows:

- Water injection to RV
- Hydrogen ignition system (i.e., igniters)
- Firewater injection into the reactor cavity
- RCS depressurization
- Containment isolation
- CSS

- Alternate containment cooling by containment fan cooler system
- Firewater injection to spray header
- Recovery of safety system

For simplicity of the CET development and quantification, the following assumptions are made:

- Although water injection into the RV will be described in the procedure manual for the severe accident, the RV is assumed to fail regardless of the status of water injection into the RV
- Ex-vessel cooling by the reactor cavity water is not credited in the US-APWR PRA due to its inherently high uncertainty
- Although high point venting from the RV may promote water injection after core damage, the possibility of this process is ignored for simplicity.
- Recovery of the CSS is considered only in case of loss of electric power and loss of CCW or essential service water for simplicity
- Firewater injection to spray header is considered for increasing time margin of the recovery of CCW or essential service water for simplicity
- Equipment survivability is not considered as a top event as it is confirmed separately, including the influence due to hydrogen combustion

As the top events of the CSET, the following containment system features and human actions are selected. The detailed descriptions are shown in Table 19.1-40 and the system dependency matrix is shown in Table 19.1-41. Simplified diagrams of major systems are shown in Figure 19.1-2.

- Containment isolation

  The containment prevents or limits the release of fission products to the environment. The containment isolation system establishes and preserves the containment boundary integrity. Failure of the containment isolation system leads to large release of fission products

- RCS depressurization

  RCS depressurization prevents temperature-induced SGTR, direct containment heating, and rocket-mode RV failure that lead to large release of fission products. The depressurization valves for severe accident are considered in the evaluation

- Hydrogen control

  The function of the hydrogen ignition system is to prevent violent detonation of highly concentrated flammable gas that could cause loss of containment integrity

- Reactor cavity flooding

  Water injection into the reactor cavity prevents core-concrete interaction that leads to containment failure. The injection systems include CSS and firewater injection to the reactor cavity

- Recovery of CSS and CS/RHR HX

  Recovery of CSS and CS/RHR HX is credited only by the recovery of support system. The support system includes electric power supply, CCWS, and ESWS. Firewater injection to the spray header delays containment failure and increases the probability of the recovery of CCWS and ESWS

The CSET is not concerned with the status of CSS and alternate containment cooling by containment fan cooler system. These systems are modeled in the Level 1 PRA because of their influence in the prevention of core damage.

The RV is assumed to fail regardless of the status of water injection into the RV (including insufficient amount of water injection, injection due to depressurization after core damage, and recovery of SIS or alternate core injection). Injection to the RV is not included as a top event in the consideration of accident progression.

The start states of the CSET correspond to the ACL and the top events are arranged in the anticipated order they apply the system. The end states are assigned to one of the PDSs.

Figure 19.1-8 shows an example CSET for one of the ACLs.

The CET end states are assigned to the intact containment or the large release. The large release is defined as any containment failure occurrence after the accident. The containment failure modes include containment bypass, containment isolation failure, containment failure due to energetic phenomena, basemat melt through, and containment overpressure failure. The energetic phenomena mean hydrogen combustion, in- or ex-vessel steam explosion, direct containment heating, and rocket-mode RV failure. The large release is classified into five release categories by considering their similarity of release path and release timing. For the US-APWR PRA, six release categories are considered including the intact containment.

The US-APWR containment ultimate capability is discussed in Subsection 19.2.4. It is calculated as 216 psia in accordance with a simple assumption that containment fails at yield strain. This is a conservative assumption.

As the top events of CPET, the following physical phenomena are selected:

- Temperature-induced hot leg rupture before temperature-induced SGTR and vessel melt through (Event IHL)

  If temperature-induced hot leg rupture occurs earlier than temperature-induced SGTR, then the primary system is depressurized and temperature-induced SGTR is prevented.

- No temperature-induced SGTR before temperature-induced hot leg rupture and vessel melt through (Event BP)

  Occurrence of temperature-induced SGTR leads to large release of fission products.

- No containment failure from in-vessel steam explosion (Event ISX)

  Containment failure due to in-vessel steam explosion leads to large release of fission products. It is assumed that this failure is considered only in low pressure sequences and does not occur in intermediate or high pressure sequences. It has been reported in various existing studies, such as ALPHA experiments, as in-vessel steam explosions are not observed when the system pressure is higher than 150psia (Reference 19.1-32)

- No containment failure from hydrogen-burn before vessel melt through (Event HB1)

  Containment failure due to hydrogen combustion before RV failure leads to large release of fission products.

- No containment failure from ex-vessel steam explosion (Event ESX)

  Containment failure due to ex-vessel steam explosion leads to a large release of fission products.

- No containment failure from direct containment heating and rocket-mode reactor vessel failure (Event DH)

  Occurrence of high pressure melt ejection brings possibility of direct containment heating and rocket-mode reactor vessel failure. Containment failure due to direct containment heating or rocket-mode reactor vessel failure leads to large release of fission products

- No containment failure from hydrogen-burn after vessel melt through (Event HB2)

  Containment failure due to hydrogen combustion at RV failure leads to large release of fission products. In considering additional generation of hydrogen due to various phenomena after vessel melt through, it is defined as a separate top event from HB1.

- Debris quenched, cooled long-term and containment cooled (Event EVC)

  Failure of debris cooling leads to the occurrence of MCCI and eventually potential basemat melt through or containment failure due to over-temperature or overpressure. Failure of containment heat removal leads to the containment failure regardless of debris cooling. These containment failures lead to large release of fission products.

The start states for the CPET correspond to PDS. Selected top events are arranged in accordance with the anticipated order of the accident progression. The timing of

containment failures that influence release characteristics of fission products to the environment and the physical phenomena that cause containment failure are taken into account to arrange the order of the top events.

The end states are assigned to the six release categories. Source terms for release categories are defined as the end state of the containment event tree. Frequency and source terms of internal events at power for each release category are quantified and significant large release sequences are evaluated. The results of source term analysis are used for the inputs of offsite dose evaluation.

Accident sequences addressed in the CET are classified by considering their similarity of release path and release timing, and grouped into release categories. These categories compose the interface between CET end states and initiating events for offsite dose evaluation. Core debris status related to airborne deposition such as effects of scrubbing and spray washout is not considered in the quantification of release categories for simplicity.

Accident sequences are classified and grouped into release categories in consideration of the following points that influence accident progression in containment and release behavior to the environment.

(1) Containment bypass

Accident sequences are classified whether containment bypass exists. Existence of containment bypass leads to early and large release of fission products to the environment.

(2) Containment isolation

Accident sequences are classified whether containment is isolated. Failure of containment isolation leads to early and large release of fission products to the environment.

(3) Overpressure due to loss of decay heat removal before core damage (Containment failure before core damage)

Accident sequences are classified whether containment fails due to overpressure before core damage. Containment failure before core damage leads to early and large release of fission products to the environment.

(4) Early containment failure

Accident sequences are classified whether containment fails due to dynamic load from core damage until immediately after reactor vessel failure. Dynamic load is caused by hydrogen combustion before or after reactor vessel failure, in-vessel and ex-vessel steam explosion, rocket-mode reactor vessel failure, and direct containment heating. Containment failure due to these energetic phenomena leads to early and large release of fission products to the environment.

(5) Late containment failure

Accident sequences are classified whether containment fails long time after reactor vessel failure. Late containment failure is caused by overpressure after core damage, hydrogen combustion long after reactor vessel failure, and basemat melt through. Such containment failure leads to late and large release of fission products to the environment.

(6) Intact containment

Accident sequences are classified whether containment does not fail and keeps its isolation functionality. For the intact containment, fission products are released at design leak rate.

The logic tree to define the six release categories is shown in Figure 19.1-26. The defined release categories are summarized below and are detailed in Table 19.1-172. And Figure 19.1-10 shows the US-APWR CPET.

- RC1: Containment bypass
- RC2: Containment isolation failure
- RC3: Containment failure before core damage
- RC4: Early containment failure
- RC5: Late containment failure
- RC6: Intact containment

In addition, fission products are always released to the environment in the case of the containment isolation failure (2I, 3I, 5I, 6I, 8I, 9I, 1J – 9J), containment failure before core damage (1K, 4K), and containment bypass (4L). These PDSs have already resulted in containment failure, and fission products are released at core damage, and release categories can be determined directly from the corresponding PDSs without considering severe accident phenomena in the containment. Therefore, CPET is not developed for these PDSs.

19.1.4.2.2 Results from the Level 2 PRA for Operations at Power

This subsection provides the results from the Level 2 PRA for at power operations.

The set of 28 accident classes is used to start the Level 2 PRA quantification process. Each ACL is assigned to Level 1 PRA event tree end states and used to link the Level 1 PRA event tree model and the CSETs. Linking and quantification are performed by RiskSpectrum® code.

The conditional probability of each CET end state for each PDS is quantified by spreadsheet models of the CPET. Failure fractions of the top event of CPET are quantified according to the following methods.

- Quantification by applying the results of PRAs previous to the US-APWR PRA

- Quantification by analyzing the load due to the physical phenomena concerned and by comparing it with pressure capacity
- Quantification by substituting the qualitative evaluation results according to the accident progression analysis by MAAP4.0.6 code with examination of the knowledge about severe accident phenomena and evaluation examples in previous PRAs

The frequency of LRF for each PDS is quantified by multiplying the CDF by the conditional probability for each PDS. The LRF is quantified by summing all frequencies of large release for each PDS. Additionally, the CCFP is defined as ratio of LRF to CDF, and is summed over all PDS frequencies.

The CDF, LRF, and CCFP are summarized as follows:

CDF = 1.0E-06/RY

LRF = 1.1E-07/RY

CCFP = 0.10

The dominant cutsets of LRF are shown in Table 19.1-42. This information is quantified by the addition of the CCFP for each PDS to the top event of the CSET end states and by RiskSpectrum® code.

The dominant cutsets that contribute greater than 1% to LRF are described below.

(1) SLOCA with reactor trip: EFWS, SIS, and CSS succeed. Therefore, core cooling succeeds. However, containment heat removal by the CS/RHR HX fails. Also, the alternate containment cooling by containment fan cooler system fails to operate and results in containment failure before core damage. The frequency of this cutset is 6.0E-09/RY and accounts for 5.7 % of LRF.

(2) LOOP with reactor trip: Emergency ac power supply system and AAC power source fail and lead to SBO. EFWS (turbine-driven pumps) succeeds. However, RCP seal LOCA occurs due to RCP seal cooling failure. Recovery of power systems within 1 hour succeeds. However CCW pumps fail to restart due to software CCF. Consequently, it results in core damage.

The containment isolation and RCS depressurization succeed. However reactor cavity flooding, and firewater injection to the spray header fails to operate due to software CCF. Recovery of CCWS fails and therefore results in containment failure. The frequency of this cutset is 4.0E-09/RY and accounts for 3.8 % of LRF.

(3) LOOP with reactor trip: Emergency ac power supply system and AAC power source fail and lead to SBO. EFWS (turbine-driven pumps) succeeds. However, RCP seal LOCA occurs due to RCP seal cooling failure. Also recovery of power systems within three hours fails and results in core damage.

The containment isolation before core damage succeeds. However, RCS depressurization fails due to loss of emergency ac power supply. Also reactor

cavity flooding fails due to loss of electrical power after core damage. The recovery of power system succeeds. However, the containment fails due to severe accident phenomena such as temperature-induced SGTR. The frequency of this cutset is 3.0E-09/RY and accounts for 2.9 % of LRF.

(4) LOOP with reactor trip: Emergency ac power supply system and AAC power source fail and lead to SBO. EFWS (turbine-driven pumps) succeeds. However, RCP seal LOCA occurs due to RCP seal cooling failure. Recovery of power systems within 3 hours succeeds. However CCW pumps fail to restart due to software CCF. Consequently, it results in core damage.

The containment isolation and RCS depressurization succeed. However reactor cavity flooding, and firewater injection to the spray header fails to operate due to software CCF. Recovery of CCWS fails and therefore results in containment failure. The frequency of this cutset is 2.6E-09/RY and accounts for 2.5 % of LRF.

(5) LOCCW with reactor trip: EFWS succeeds. Both alternate CCW supply by the cooling tower and by the firewater system fails to operate and results in RCP seal LOCA due to RCP cooling failure. Consequently, it results in core damage.

The containment isolation, RCS depressurization succeeds. However reactor cavity flooding and firewater injection to the spray header fails to operate due to software CCF. Recovery of CCWS fails and therefore results in containment failure. The frequency of this cutset is 2.4E-09/RY and accounts for 2.3% of LRF

(6) LOCCW with reactor trip: This is the same as (5) until core damage.

The containment isolation, RCS depressurization, and reactor cavity flooding succeeds. Also firewater injection to the spray header succeeds. However recovery of CCWS fails and results in containment failure. The frequency of this cutset is 2.2E-09/RY and accounts for 2.1 % of LRF.

(7) LOOP with reactor trip: This is the same as (3) until core damage.

The containment isolation before core damage succeeds. However, RCS depressurization fails due to loss of emergency ac power supply. Also reactor cavity flooding fails due to loss of electrical power after core damage. The recovery of power system succeeds. However CSS fails due to software CCF and results in containment failure. The frequency of this cutset is 1.8E-09/RY and accounts for 1.7 % of LRF.

(8) LOCCW with reactor trip: This is the same as (5) until core damage.

The containment isolation, RCS depressurization, and reactor cavity flooding succeeds. Also firewater injection to the spray header succeeds and recovery of CCWS succeed. However the containment fails due to some severe accident phenomenon. The frequency of this cutset is 1.7E-09/RY and accounts for 1.6 % of LRF.

(9) LOOP with reactor trip: This is the same as (3) until core damage.

The containment isolation before core damage succeeds. However, RCS depressurization fails due to loss of emergency ac power supply. Also reactor cavity flooding fails due to loss of electrical power after core damage. The recovery of power system succeeds. However, the containment fails due to severe accident phenomena such as temperature-induced SGTR and hydrogen burning. The frequency of this cutset is 1.4E-09/RY and accounts for 1.4 % of LRF.

(10)SLOCA with reactor trip: EFWS and SIS succeed. Therefore, core cooling succeeds. However, CSS fails. Also, the alternate containment cooling by containment fan cooler system fails to operate and results in containment failure before core damage. The frequency of this cutset is 1.3E-09/RY and accounts for 1.3 % of LRF.

(11)SGTR with reactor trip: EFWS and SIS succeed. However the isolation of the faulted SG fails. Also, high head injection flow fails to control and results in core damage..

This is the containment bypass. The frequency of this cutset is 1.3E-09/RY and accounts for 1.2 % of LRF.

(12)Reactor vessel rupture: This initiating event is assumed to directly result in core damage. All systems are functional.

The containment isolation and reactor cavity flooding succeeds. Also the containment heat removal succeeds. However, the containment fails due to severe accident phenomena such as steam explosion and hydrogen burning. The frequency of this cutset is 1.2E-09/RY and accounts for 1.2 % of LRF.

(13)LOCCW with reactor trip: This is the same as (5) until core damage.

The containment isolation, RCS depressurization, and reactor cavity flooding succeed. However firewater injection to the spray header fails to operate due to human error. Recovery of CCWS fails and therefore results in containment failure. The frequency of this cutset is 1.2E-09/RY and accounts for 1.1% of LRF

(14)LOOP with reactor trip: This is the same as (3) until core damage.

The containment isolation before core damage succeeds. However, RCS depressurization fails due to loss of emergency ac power supply. Also reactor cavity flooding fails due to loss of electrical power after core damage. The recovery of power system by the commencement of MCCI fails and results in containment failure. The frequency of this cutset is 1.0E-09/RY and accounts for 1.0% of LRF

(15)LOOP with reactor trip: This is the same as (3) until core damage.

The containment isolation before core damage succeeds. However, RCS depressurization fails due to loss of emergency ac power supply. Also reactor cavity flooding fails due to loss of electrical power after core damage. The recovery of power system by the commencement of MCCI fails and results in

containment failure. The frequency of this cutset is 1.0E-09/RY and accounts for 1.0% of LRF

(16)SLBO with reactor trip: FAB succeeds. Therefore, core cooling succeeds. However, containment heat removal, and the alternate containment cooling by containment fan cooler system fails to operate and results in containment failure before core damage. The frequency of this cutset is 1.0E-09/RY and accounts for 1.0 % of LRF.

The portion of each initiating event in the LRF is summarized in Table 19.1-43. This information is presented in the chart shown in Figure 19.1-10 with the percentage of total LRF.

Table 19.1-43 shows that six initiating events account for over 90 percent of the total LRF. These events are as follows:

- Loss of offsite power (LOOP)
- Small pipe break LOCA (SLOCA)
- Loss of component cooling water (LOCCW)
- Steam generator tube rupture (SGTR)
- Partial loss of component cooling water (PLOCW)
- Steam Line Break/Leak (Downstream MSIV: Turbine side) (SLBO)

The first four events account for 40.4%, 18.0%, 10.7% and 10.2% of the total LRF, respectively. The contribution of the other initiating events is less than 10% of the total LRF.

Importance analyses have been performed to evaluate the following issues:

- Basic event importance
- CCF importance
- Human error importance
- Component importance

The results of Fussell Vesely (FV) importance and risk achievement worth (RAW) for the large release frequency are shown in Table 19.1-44 and Table 19.1-45 respectively.

The top five most significant basic events, based on the FV importance, are as follows:

OPS----PRBF (Failure of offsite power recovery within one hour) – This basic event applies only to condition where total loss of ac power occurs after LOOP. If offsite power does not recover within one hour under total loss of ac power condition, RCP seal LOCA is assumed to occur. 27% reduction from the current LRF is anticipated if the probability of this failure is set to 0.0.

OPS---- PRCF (Failure of offsite power recovery within three hours) – This basic event applies only to condition where total loss of ac power occurs after LOOP. If offsite power does not recover within three hours under total loss of ac power condition, core damage is assumed to occur due to RCP seal LOCA. 23% reduction from the current LRF is anticipated if the probability of this failure is set to 0.0.

EPSOO02RDG (Fail to connect the alternate ac power source to Class 1E bus) – This basic event applies only to condition where loss of emergency ac power occurs after LOOP. If operators fail to connect the AAC power source to Class 1E bus, SBO occurs. 22% reduction from the current LRF is anticipated if the probability of this failure is set to 0.0.

SGNBTSWCCF2 (CCF of group-2 application software) – This basic event applies to the operation of almost safety systems. If this software CCF occurs, almost safety systems such as SIS and CCS fail to start. 17% reduction from the current LRF is anticipated if the probability of this failure is set to 0.0.

EPSCF4DLLRGTG-ALL (CCF of Class 1E emergency power generators to run after first hour) – This basic event applies to conditions after LOOP. If all four Class 1E gas turbine generators failed to operate due to CCF, total loss of ac power occurs. 14% reduction from the current LRF is anticipated if the probability of this failure is set to 0.0.

The top five most significant basic events, based on the RAW, are as follows:

RTPBTSWCCF (CCF of basic software)

The plant LRF would increase approximately 3.6E+05 times if the probability of this failure were set to 1.0. This significant increase in the LRF is due to loss of all digital instruments that will result in failure of transmitting various signals including plant trip signal and emergency core cooling system actuation signal.

EPSCF4CBSO52STL-ALL (CCF of all circuit breaker between Class 1E station service transformer and Class 1E 480V load center to spurious open)

The plant LRF would increase approximately 5.9E+04 times if the probability of this failure were set to 1.0. This significant increase in the LRF is due to loss of all Class 1E 480V load centers.

EPSCF4CBSO52STH-ALL (CCF of all circuit breaker between Class 1E 6.9kV bus and Class 1E station service transformer to spurious open)

The plant LRF would increase approximately 5.9E+04 times if the probability of this failure were set to 1.0. This significant increase in the LRF is due to loss of all Class 1E 480V load centers.

SWSCF4PMYR-FF (CCF of all essential service water pump to run)

The plant LRF would increase approximately 5.8E+04 times if the probability of this failure were set to 1.0. This significant increase in the LRF is because of the loss of containment heat removal due to loss of cooling chain to ultimate heat sink.

CWSCF4RHPR-FF (CCF of all CS/RHR HX to plug / foul)

The plant LRF would increase approximately 5.3E+04 times if the probability of this failure were set to 1.0. This significant increase in the LRF is because of the loss of containment heat removal due to loss of cooling chain to ultimate heat sink.

Common cause importance

The top 10 risk-important common cause basic events for a FV importance and for a RAW are given in Table 19.1-46 and Table 19.1-47, respectively.

The most significant CCF basic event based on FV importance is CCF of group-2 application software. The second most significant CCF basic event is CCF of Class 1E emergency power generators.

The most significant CCF basic events based on the RAW are almost the same as the basic events ranked in top ten most significant basic events based on RAW.

Human error importance

The top 10 risk-important human error basic events for a FV importance and for a RAW are given in Table 19.1-48 and Table 19.1-49, respectively.

The most significant human error basic event based on FV importance is **EPSOO02RDG (Fail to connect the alternate ac power source to Class 1E bus)**, with a FV importance of 2.2E-01.

The most significant human error basic event based on RAW is **SGNOO04ICVR12 (Miscalibration of C/V pressure sensors A,B,C,D)**, with a RAW of 4.9E+01. The plant LRF would increase approximately 49 times, if the probability of this failure were set to 1.0.

Component importance

The top 10 risk-important hardware single failure events for a FV importance and for a RAW are given in Table 19.1-50 and Table 19.1-51, respectively.

Three single failure basic events have a FV importance greater than 2.0E-02. The most significant single failure basic event based on FV importance is **EPSDLLRAACB-L2**, which represent the failure of AAC GTG, with a FV importance of 4.1E-02.

There are top 10 basic events that have a RAW greater than 1.6E+03. The most significant single failure basic event is a rod injection failure. The plant LRF would increase approximately 2.6E+04 times if the probability of this failure were set to 1.0.

The top 15 dominant PDSs are given in Table 19.1-52. This table shows that 12 PDSs account for over 90 percent of the total LRF. These PDSs are as follows:

- 4K (Medium RCS pressure, and containment failure before core damage)

- 1D (Low RCS pressure, cavity not flooded, igniter functional, CSS not injected, and no containment heat removal)
- 4L (SGTR)
- 3D (Low RCS pressure, cavity flooded before RV failure, igniter functional, CSS not injected, and no containment heat removal)
- 4D (Medium RCS pressure, cavity not flooded, igniter functional, CSS not injected, and no containment heat removal)
- 5E (Medium RCS pressure, cavity flooded after RV failure, igniter not functional, CSS injected and containment heat removal)
- 3A (Low RCS pressure, cavity flooded before RV failure, igniter functional, CSS injected, and containment heat removal)
- 4H (Medium RCS pressure, cavity not flooded, igniter not functional, CSS not injected, and no containment heat removal)
- 5A (Medium RCS pressure, cavity flooded after RV failure, igniter functional, CSS injected and containment heat removal)
- 1H (Low RCS pressure, cavity not flooded, igniter not functional, CSS not injected, and no containment heat removal)
- 6H (Medium RCS pressure, cavity flooded before RV failure, igniter not functional, CSS not injected, and no containment heat removal)
- 8A (High RCS pressure, cavity flooded after RV failure, igniter functional, CSS injected, and containment heat removal)

The 4K accounts for 18.6% of the total LRF. This PDS is containment failure before core damage.

The 1D, 3D, 4D, 4H, 1H, and 6H account for 11.9%, 9.1%, 9.0%, 5.4%, 3.9%, and 2.8% of the total LRF, respectively. These PDSs involve loss of containment heat removal. Therefore, containment cannot maintain its integrity.

The 4L accounts for 9.5% of the total LRF. This PDS is containment bypass.

The 5E accounts for 7.9% of the total LRF. This PDS is success of containment isolation, containment heat removal, reactor cavity flooding after vessel melt through. However igniters are failed. Also this PDS is medium RCS pressure. Therefore, containment fails due to severe accident phenomena such as temperature-induced SGTR, direct containment heating or hydrogen burning.

The 3A accounts for 6.0% of the total LRF. This PDS is success of containment isolation, containment heat removal, reactor cavity flooding before vessel melt through and igniters. Also this PDS is low RCS pressure. Therefore, containment fails due to severe accident phenomena such as ex-vessel steam explosion.

The 5A accounts for 4.3% of the total LRF. This PDS is success of containment isolation, containment heat removal, reactor cavity flooding before vessel melt through and igniters. Also this PDS is medium RCS pressure. Therefore, containment fails due to severe accident phenomena such as temperature-induced SGTR or direct containment heating.

The 8A accounts for 2.6% of the total LRF. This PDS is success of containment isolation, containment heat removal, reactor cavity flooding after vessel melt through and igniters. Also this PDS is high RCS pressure. Therefore, containment fails due to severe accident phenomena such as temperature-induced SGTR, direct containment heating or rocket-mode reactor vessel failure.

An analysis has been performed to determine the sensitivity of LRF to the following:

Sensitivity analysis of failure fraction is performed to study the impact of the debris coolability on plant LRF for internal initiating events at power.

- Case 01: Failure fraction of the debris coolability is increased to 0.1 from 0.002

  If failure fraction of the debris coolability is 0.1, the LRF is 2.0E-07/RY, which is approximately twice that of the base case.

- Case 02: Failure fraction of the debris coolability is decreased to 0.0 from 0.002

  If failure fraction of the debris coolability is 0.0, the LRF is 1.0E-07/RY, which is almost same as the LRF of the base case.

A PRA study involves many sources and type of uncertainty. Some are quantifiable and can be propagated through the model to generate an uncertainty distribution. Others deal with issues such as the state of knowledge and are difficult to quantify. Key sources of uncertainty and key assumptions made in the development of the PRA model for internal events at power are provided below. They have been identified and assessed for their impact on the results of the PRA.

The assessed areas of uncertainty include parametric uncertainty and modeling uncertainty.

Parametric uncertainty associated with parametric values and is that propagating these through modeling formalisms. Evaluations this uncertainty results in a better understanding of the variability of the mean or expected value of the distribution and the range of possible outcomes. A parametric uncertainty evaluation propagates the uncertainty distribution through the model to produce the mean value of LRF using Monte Carlo simulation.

The results of the parametric uncertainty quantification for the total LRF are summarized in Figure 19.1-11. The mean, median, lower 5th percentile, and upper 95th percentile of the distribution were calculated. The EF was estimated by the square root of the ratio of the 95th percentile to the 5th percentile.

The plant LRF uncertainty range is found to be 3.5E-07/RY to 2.6E-08/RY for the 95% to 5% interval. This indicates that there is 95% confidence that the plant LRF is no greater than 3.5E-07/RY. The EF for the total LRF is 3.7.

Modeling uncertainty consists of key assumptions and key decisions that are made in developing the model. Table 19.1-53 lists key sources of uncertainty and key assumptions made in the development of the PRA models along with a qualitative assessment of the items pertaining to modeling uncertainty.

The insights from PRA results are the following:

- The LRF for operations at power is lower than 1.0E-06/RY. This is due to the fact that the US-APWR containment has high capability to withstand many postulated severe accident phenomena, as described in Subsections 19.2.3 and 19.2.4. This fact is obtained from the examination of PDSs in which severe accident phenomena cause containment failure. These PDSs have low contribution to the LRF.

- Some mitigation systems effectively reduce the LRF. The containment isolation system with the dc-driven containment isolation valves effectively reduces the potential of the containment isolation failure in the SBO condition, which is a major contributor to the CDF. The firewater injection to the spray header reduces the potential for containment failure in the loss of CCW. The alternate containment cooling by containment fan cooler system reduces the potential of the containment failure before core damage in which the CSSs fails by CCF.

- The major initial events of the LRF are loss of CCW and loss of offsite power. Loss of offsite power includes CCF of the CCW pumps restart at the time of emergency power recovery. The reason for the importance of these events is that the containment heat removal systems share CCWS as cooling chain to the ultimate heat sink with the core cooling systems such as SIS and alternate core cooling. Therefore the major PDSs that contribute to the total LRF are the ones related to loss of containment heat removal. Upon such a loss, the containment is likely to fail regardless of severe accident phenomena even if incorporating the potential recovery of CCWS for the containment heat removal.

The insights from the importance, sensitivity, and uncertainty analyses are:

- The CCF basic events are important. This is reasonable for a plant with highly redundant safety systems.

- If the failure fraction of the debris coolability increases, the LRF increases because of one of the key conservative assumptions of Level 2 PRA that RV always fails as the consequence of core damage. If this conservative assumption is not considered, the possibility of succeeding in-vessel core retention may arise and it may be possible to avoid the ex-vessel phenomenon, resulting in a reduced LRF.

The release categories are quantified in accordance with the same conservative assumptions considered in quantification of the LRF, with one additional assumption.

- When containment is not cooled the atmosphere is likely to be inerted due to high steam concentration. The hydrogen concentration is accordingly likely to be lower

than when containment is cooled. However, it is assumed that the hydrogen concentration and related failure fractions is relatively high for simplicity.

The frequency of each release category is evaluated as shown in Table 19.1-173. The contribution to the total CDF is shown in Figure 19.1-27.

Source terms are evaluated by employing MAAP 4.0.6 code for the US-APWR. The most dominant sequence is selected as a representative sequence of each release category considering its occurrence frequency. For release categories RC1 and RC5, a severer sequence is selected in light of its accident progression and source term instead of its frequency among the highly ranked dominant sequences.

- RC1: SGTR + SIS and CSS available + broken loop MSRV stuck open
- RC2: Total loss of ac power and subsequent RCP seal LOCA + purge line isolation failure
- RC3: SLOCA + SIS and CSS available although HX unavailable (SIS and CSS are forced stop immediately after containment failure)
- RC4: Total loss of ac power and subsequent RCP seal LOCA + SIS and CSS unavailable + Containment failure immediately after RV failure due to an energetic phenomenon
- RC5: Total loss of ac power and subsequent RCP seal LOCA + SIS and CSS unavailable
- RC6: SLOCA + SIS unavailable + CSS available + Containment design leak

The analysis result for each release category is summarized in Table 19.1-174.

19.1.5 Safety Insights from the External Events PRA for Operations at Power

External events considered in the US-APWR PRA are those whose cause is external to all systems associated with normal and emergency operations situations, with the exception of internal fires and floods, which are included here based on historical protocol. Some external events may not pose a significant threat of a severe accident. Some external events are considered at the design stage and have a sufficiently low contribution to CDF or plant risk. Chapter 2 of the COLA Final Safety Analysis Report (FSAR) will provide information concerning the geological, seismological, hydrological, environmental, and meteorological characteristics of the site and vicinity, in conjunction with present and projected population distribution, including land use relative to site activities and controls. Chapter 2 of the COLA FSAR will contain site specific information as compared to the standard design envelope criteria. Assessing the risk of external events necessarily includes site-specific issues. Chapter 2 of the DCD contains generic site parameter requirements necessary to meet the engineering and design needs for safe construction and operation of the US-APWR. Based primarily upon the guidelines provided in Generic Letter 88-20 (Reference 19.1-33) and ASME/ANS RA-Sa-2009 (Reference 19.1-50), the following is a list of external events that are included for US-APWR analysis.

1. High winds, tornadoes and hurricanes
2. External flooding
3. Transportation and nearby facility accidents
4. Aircraft crash
5. Seismic
6. Internal fires
7. Internal flooding

The last three events listed above receive detailed evaluation in the following subsection. The first four cannot be properly evaluated until a specific site has been selected. Chapter 2 of this DCD contains bounding site parameter requirements for following events.

- Nearby industrial, transportation, and military facilities
- Meteorology
- Hydrologic engineering
- Geology, seismology, and geotechnical engineering

Evaluation of potential accidents for the nearby industrial, transportation, and military facilities in Chapter2 is a probabilistic and predictive approach that will be followed and documented in the COLA to verify that a 10^{-7} per year occurrence rate has been demonstrated. For low probability events, where data may not be available, a 10^{-6} per year occurrence rate can be utilized when combined with reasonable qualitative arguments. Otherwise, a PRA may need to be performed to comply with the guidance of ASME/ANS RA-Sa-2009. The screening criteria of US-APWR for other external events will be determined at COL phase confirming that the screening criteria is below the plant specific risk of US-APWR.

The beyond design basis aircraft impact assessment for the US-APWR in accordance with 10 CFR 50.150 is discussed in Appendix 19A.

19.1.5.1 Seismic Risk Evaluation

The following subsections describe the seismic risk evaluation including the results of the evaluation.

19.1.5.1.1 Description of the Seismic Risk Evaluation

Risk quantification of the seismic PRA involves the integration of the seismic hazard, fragility, and accident sequence model to evaluate core damage, radiological releases, and offsite risks. The seismic margin methodology has been applied to estimate the plant-level seismic margin and accident sequences. The seismic margin for the US-

APWR is evaluated by using PRA-based SMA. This methodology satisfies the recommendation of SECY-93-087 (Reference 19.1-34) approved by the NRC for a seismic risk evaluation. SMA identifies potential vulnerabilities and demonstrates seismic margins beyond the design-level safe-shutdown earthquake (SSE). The capacity of components required to bring the plant to a safe and stable conditions is assessed. The SSCs identified as important to seismic risk are addressed.

The outline associated with the SMA methodology is shown in Figure 19.1-12. The PRA based SMA consists of following elements.

- Selection of review level earthquake

  The starting point to perform SMA is to select a review level earthquake. SMA demonstrates that sufficient margin in seismic design exists by showing the high confidence of low probability of failures (HCLPFs) of the plant and components are greater than review level earthquake (RLE). For the US-APWR design, the certified seismic design response spectra (CSDRS) is the SSE. The horizontal and vertical CSDRS are provided in Figures 3.7.1-1 and 3.7.1-2. The RLE of US-APWR is 0.5g, that is, 1.67 times of the SSE (0.3g).

- Development of seismic equipment list (SEL)

  The seismic equipment list is provided from the internal event PRA model. Also, earthquake-specific SSCs such as passive components and structures related to a safety function, which are not addressed in the internal event PRA model, are involved for the fragility analysis and system analysis.

- Identification of seismic initiating event category

  Initiating events due to a seismic event are identified from the internal events analysis. However there are some major differences between the seismic and internal events for purpose of identifying initiating event category, which are as follows: (1) seismic events may damage passive plant components and structures (e.g., SGs, reactor building, power source building) that are not explicitly modeled in the internal event PRA; and (2) seismic events may simultaneously damage multiple redundant systems and components at the plant. Identified seismic initiating event categories are modeled as hierarchy structures.

- Development of system models

  The SMA system models are developed from the internal events PRA model to include the important accident sequences. This model also contains random failures and human errors from the internal events PRA. System models are modified to accommodate a seismic event. The model is used to estimate seismic margins and to identify vulnerabilities in the design.

- Fragility analysis

  At the design certification phase, specific design data such as material properties, analysis results, qualification test information, etc. are not available. Therefore, generic fragility data is used for the component fragility of US-APWR components.

The generic data used for US-APWR are based on the fragilities provided by the Electric Power Research Institute (EPRI) Utility requirements document (Reference 19.1-35). Seismic fragilities of structures are developed using the methodology in Reference 19.1-36.

For equipment on the SEL, which is to be qualified by seismic qualification tests, the procurement specifications shall be developed to ensure that the appropriate HCLPF capacity of procured equipment is maintained, as required by Reference 19.1-57. Consistent with Reference 19.1-56, there should be less than a 1 percent probability of failure at a ground motion equal to 1.67 times the CSDRS, including consideration of testing uncertainties. The seismic demands to equipment defined in terms of required response spectra (RRS) should use CSDRS-based seismic input and account for the structural amplifications caused by the supporting structures, including soil-structure interaction effects and supporting systems, and incorporate an additional seismic margin factor, as appropriate. Details on the qualification process are to be provided to the equipment vendors in the specifications and methodology documents during procurement under a 10CFR50 Appendix B qualification program.

The COL Applicant will (1) update the design-specific plant system and accident sequence analysis to incorporate site-specific effects (soil liquefaction, slope failure, etc.) and plant-specific features (safety-related site-specific structures), as applicable, (2) update the SEL with HCLPF values and associated failure modes to adequately reflect the site-specific effects and plant-specific features of the COL site (for soil-related failure modes, the site-specific ground motion response spectra (GMRS) can be used for HCLPF calculations), and (3) demonstrate that the design-specific plant-level HCLPF capability is maintained in the COL application (Reference 19.1-57).

- Evaluation for the plant seismic capacity

  There are two acceptable approaches to evaluate the plant seismic margin as described in NUREG/CR-4482 (Reference 19.1-37).

  - “Min-max” method, in which HCLPF is assessed for accident sequences by taking the lower HCLPF value for components operating under OR logic and the highest HCLPF value for components operating under AND logic.

  - “Convolution” method in which probabilities of non-seismic and operator failures are included in the calculation as well as the component fragilities. This is a fully quantitative approach where the importance and contribution of seismic as well as non-seismic failures can be assessed quantitatively.

  The “min-max” method is selected as the appropriate method at the design certification phase since detailed plant-specific data is unavailable. This method is accomplished by calculating HCLPFs for each seismic event tree top event that represents a safety-related system or function. HCLPFs of systems are calculated in conjunction with random and/or human factors.

- Demonstration of seismic margin in the design

The objective is to demonstrate that there is sufficient seismic margin in the design. If the plant HCLPF is less than the review level earthquake, modification of the design or the model is required.

A fragility evaluation is performed to obtain the seismic margin of components and structures that could have an effect on safe shutdown of the plant following a seismic event. In this evaluation, the seismic margin values of components and structures modeled in the accident sequences are obtained. The seismic margin is expressed in terms of HCLPF values.

$HCLPF = A_m * \exp(-1.65*(\beta_R + \beta_U))$

or

$HCLPF = A_m * \exp(-2.33*\beta_C)$

A_m: median capacity

β_R: logarithmic standard deviation representing the randomness

β_U: logarithmic standard deviation representing the uncertainty

β_C: composite logarithmic standard deviation

The median capacities and HCLPFs are expressed in terms of the peak ground acceleration (PGA). An earthquake of 0.5g PGA is defined as the review level earthquake for the US-APWR.

a. Components

As previously noted, at the design certification phase, specific design data of components such as material properties, analysis results, qualification test information, etc. are not available. Therefore, generic fragility data are used to obtain the component fragility of the US-APWR standard design. The generic data used for US-APWR are based on the fragility data presented in Reference 19.1-35. Median capacities are provided for various types of site foundations in Reference 19.1-35, i.e., rock, soil 1, soil 2, soil 3, soil 4, and soil 5. In this evaluation, the HCLPF value of each component is calculated using the most conservative median capacity of these site type values. Components for which generic data are not available or not appropriate are assumed conservative HCLPF values. The assumed HCLPF values are selected conservatively from the Seismic Category I components designed to a SSE with 0.3g PGA .

b. Structures

The containment structure is a freestanding post-tensioned pre-stressed reinforced concrete structure with a hemispherical dome. A Finite Element (FE) model of the nuclear island buildings that are founded on a common basemat was developed for soil-structure interaction analysis. Seismic

fragilities of the structures are developed using the methodology in Reference 19.1-36 and information from the design documents.

The important structural response factors that would influence structure seismic response and variability are as follows:

- Spectral shape factor

- Damping factor

- Modeling factor

- Modal combination factor

- Earthquake components combination factor

- Soil-structure interaction factor

- Ground motion incoherence factor

- Horizontal direction peak response

Also the capacity factors considered in the evaluation are as follows:

- Strength factor

- Inelastic energy absorption factor

Structures for which design information is not available are assumed conservative HCLPF values. The assumed HCLPF values are decided conservatively from the Seismic Category I structures designed to a SSE of 0.3g PGA

For SSCs for which generic fragility data is not available or is not appropriate, a HCLPF value of 0.5g PGA is assumed. The seismic design of US-APWR has some conservatism. For example,

- Broadened floor response spectrum is used for seismic response analysis of Seismic Category I SSCs.

- Allowable stress of SSCs is provided considering safety margins

SSCs of Seismic Category I are designed for SSE of 0.3g PGA with such conservatisms that they have high seismic capacity. Therefore, HCLPF of 0.5g PGA would be reasonably achievable for Seismic Category I SSCs. This value is assigned for those SSCs at design certification phase. The fragilities of those SSCs will be confirmed that the HCLPFs of the SSCs are greater than 0.5g PGA at the detailed seismic design phase.

The major assumptions for the SMA model are as follows:

a. It is assumed that the seismic event would result in a LOOP, since offsite power equipment is not Seismic Category I. (The insulators on the offsite power feed lines can fail in a seismic event such that a LOOP occurs.)

b. No credit is taken for non-safety-related systems. They are assumed in the model to have failed or to be non-functional due to the seismic event.

c. In the SMA system fault trees, the operator actions in the random failure cutsets from the internal events PRA are assumed as having a failure probability of 1.0. Thus, no credit is taken for the operator actions.

d. As a conservative assumption, if one component fails due to the seismic event, the same type components of the system will fail as well.

e. Failure of the reactor trip signal is not modeled since the control rod motor generator sets would be de-energized following a LOOP due to a seismic event and succeed in the release of control rods into the core even if the reactor trip function fails. However, if the core assembly or the control rod system fails to insert into the core, these equipment failures are addressed in the event, which leads to core damage.

f. It is assumed that piping will fail prior to failure of associated pressure boundary valves. Therefore, valves that are not required to change positions are not included. Also, orifices are not included. Valves that change position, such as motor-operated valves or check valves are assumed to fail the function at the HCLPFs.

g. Failure of the RHRS isolation valves is not included in the analysis, because the pipe sections are assumed to fail before the valves fail and these valves are normally closed. Also, the US-APWR design has provided further protection against interfacing system LOCA by upgrading design pressure. Therefore, interfacing system LOCA is not modeled.

h. Identified pipe segments in the same system are modeled as failing at the same acceleration level at the same time.

i. Failure of buildings that are not Seismic Category I (i.e., turbine building, auxiliary building and access building) does not impact SSCs designed to be Seismic Category I. Seismic spatial interactions between SSCs design to be Seismic Category I and any other buildings will be avoided by proper equipment layout and design. The following Seismic Category I buildings and structures are identified as buildings and structures that involve safety-related SSCs to prevent core damage.

- Reactor building

- Safety power source buildings

- Essential service water intake structure

- Essential service water pipe tunnel

j. Relay chatter does not occur or does not affect safety functions during and after seismic event.

Six seismically induced initiating event categories have been identified, and are listed below in order of greatest to least “challenges.”

- Gross structural collapse
- LOCA in excess of ECCS capacity
- Loss of CCW system (includes loss of essential service water system)
- Large LOCA (includes medium LOCA)
- Small LOCA (includes very small LOCA)
- LOOP (includes a “family” of transients)

Cutset calculation of the US-APWR PRA used the RiskSpectrum® PRA code.

19.1.5.1.2 Results from the Seismic Risk Evaluation

The result of the PRA based SMA is the plant HCLPF for core damage. The steps to perform the PRA based SMA include the following.

1. HCLPFs for seismic basic events - The HCLPFs for various US-APWR SSCs were calculated. See Table 19.1-54 for HCLPF values of structures and categories of components, and Table 19.1-55 for HCLPF values for basic events.
2. Calculation of seismic initiating event HCLPFs - Initiating event HCLPFs are calculated using the min-max method.
3. Calculation of cutsets for the core damage - Cutsets of the core damage sequences are quantified using fault tree linking process. The seismic cutsets contain only seismic failure events. Then, the probability of random failures is set to 0.0, and cutsets are calculated.
4. Calculation of sequence HCLPFs and the plant HCLPF - Sequence HCLPFs are calculated using the min-max method. The plant HCLPF is calculated as the minimum sequence HCLPF, as shown in Table 19.1-56.
5. Calculation of core damage mixed-cutsets - The mixed-cutsets contain both seismic failures and random failures. Random failure probabilities are derived from the internal PRA model. The mixed-cutsets are quantified using fault tree linking process.

The dominant sequence HCLPFs are shown below.

	Initiating event	Fault tree	Sequence
1.	SE_ELOCA (0.50 g)		= SE_ELOCA-0001 (0.50 g)
2.	SE_CCW (0.50 g)		= SE_CCW-0001 (0.50 g)
3.	SE_LOOP (0.08 g) [AND]	SE-OPS (0.50 g)	= SE_LOOP-0027 (0.50 g)
4.	SE_GSTC (0.53g)		= SE_GSTC-0001 (0.53g)

Accident scenario and important contributors to each sequence are described below.

1. SE_ELOCA-0001

   SE_ELOCA-0001 sequence, with HCLPF value 0.50 g, is a loss of the RCS inventory that exceeds the ECCS capacity to provide makeup event. This event leads to core damage. The most important contributors to this event are:

   (1) Structural failure of the fuel assembly : (reactor internals and core assembly) 0.50 g

   (2) Structural failure of the reactor vessel : 0.62 g

   (3) Structural failure of the reactor coolant pumps (RCPs) : 0.67 g

2. SE_CCW-0001

   SE_CCW-0001 sequence, with HCLPF value 0.50 g, is a seismically induced loss of CCW event. This event causes RCP seal LOCA and results in failure of all systems cooled by the CCWS such as the safety injection pumps and the CS/RHRS pumps. This event leads to core damage. The most important contributors to this event are:

   (1) Structural failure of the essential chiller units: 0.50 g

   (2) Structural failure of essential service water Intake structure: 0.50 g

   (3) Structural failure of essential service water pipe tunnel: 0.50 g

   (4) Structural failure of CCW heat exchangers: 0.58 g

   (5) Structural failure of the component cooling water surge tanks: 0.58 g

   (6) Structural failure of the CS/RHR heat exchangers: 0.58 g

3. SE_LOOP-0027

   SE_LOOP-0027 sequence, with HCLPF value 0.50 g, is a seismically-induced LOOP event and failure of Class 1E gas turbine generators. This event sequence causes RCP seal LOCA and results in failure of all systems cooled by CCWS.

The most important cutsets associated with this sequence involve failure of the ceramic insulators (0.08 g) combined with failure of the Class 1E gas turbine generators (0.50 g).

4. SE_GSTC-0001

   SE_GSTC-0001 sequence, with HCLPF value 0.53 g, is a gross structural collapse event which lead to core damage. The most important contributors to this event are:

   (1) Structural failure of the cable trays: 0.53 g

   (2) Structural failure of the containment: 0.63 g

   (3) Structural failure of the refueling water storage pit: 0.63 g

The plant HCLPF is calculated by finding the lowest HCLPF sequence shown in Table 19.1-56. The plant HCLPF value is 0.50 g. Therefore, an acceptable standard design is realized since the plant HCLPF (0.50 g) is greater than or equal to the review level earthquake PGA (0.50 g).

It is not desirable that conservative SSC HCLPFs control the plant HCLPF. Conservative HCLPFs of 0.50 g are assigned to essential chiller units (0.50 g), essential service water Intake structure (0.50 g), essential service water pipe tunnel (0.50 g), fuel assembly (0.50 g) and Class 1E gas turbine generators (0.50 g). When the design activity progresses and specific design data becomes available, the SSC HCLPF values will be confirmed that they are greater or equal to the review level earthquake PGA.

Thus, a sensitivity study is performed by setting the HCLPF capacities for these SSCs to1.0 g. The result of the plant HCLPF increased to 0.53 g.

From the results of the plant HCLPF calculation and sensitivity studies, SSCs that make the largest contribution to seismic risk are as follows:

1. SE-HVACHSF001BC (0.50 g) :Essential Chiller Units (structural failure)
2. SE-SWSSRSFESWBAS (0.50 g) : Essential service water Intake structure (structural failure)
3. SE-SWSSRSFESWTUN (0.50 g) : Essential service water pipe tunnel (structural failure)
4. SE-ELOSRSFFUEL (0.50 g) : Fuel assembly (structural failure)
5. SE-EPSDLFFGTABCD (0.50 g) : Class 1E gas turbine generators (functional failure)
6. SE-GTSCASFCABLE (0.53 g) : Cable tray (structural failure)
7. SE-CWSTNSF001AB (0.58 g) : Component Cooling Water surge tanks (structural failure)

8. SE-CWSRISF001ABCD(0.58 g) : CCWS heat exchangers(structural failure)

9. SE-RSSRISF001ABCD (0.58 g) : CS/RHRS heat exchangers(structural failure)

The potential impact of random failures on the vulnerability of the plant is assessed by examining “mixed cutsets” in the results. Dominant mixed-cutsets are defined as the mix-cutsets containing the random failure probability higher than 1.0E-03 in this study. The dominant mixed-cutsets (i.e., the combination of seismic failure and no seismic failures) are organized as follows:

- Combination 1:

  Seismically induced small LOCA initiating event

  [AND] Seismically induced failure of motor driven EFW pumps

  (including supporting system failure)

  [AND] Random failure of one turbine driven EFW pump

  (including supporting system failure)

- Combination 2:

  Seismically induced small LOCA initiating event

  [AND] Seismically induced failure of turbine driven EFW pumps

  (including supporting system failure)

  [AND] Random failure of one motor driven EFW pump

  (including supporting system failure)

- Combination 3:

  Seismically induced loss of offsite power initiating event

  [AND] Seismically induced failure of motor driven EFW pumps

  (including supporting system failure)

  [AND] Random failure of one turbine driven EFW pump

  (including supporting system failure)

- Combination 4:

  Seismically induced loss of offsite power initiating event

[AND] Seismically induced failure of turbine driven EFW pumps

(including supporting system failure)

[AND] Random failure of one motor driven EFW Pump

(including supporting system failure)

For seismically induced failure of Class 1E GTGs, it is assumed that the seismic margin of the AAC GTGs are much higher than that of the offsite power system so the AAC GTGs are available during seismically-induced LOOPs. The mixed cut set for seismically induced loss of offsite power includes failure of Class 1E GTGs and AAC GTGs as follows:

- Combination 5

  Seismically induced loss of offsite power initiating event

  [AND] Seismically induced failure or random failure of Class 1E GTGs

  [AND] Random failure or seismically induced failure of AACs or Human error to connect AACs to Class 1E ac buses

Multiple failures of SSCs are required in order to drive the plant to core damage. The probability of this scenario would be low. From these results, random failures are concluded to not have significant impact on seismic safety.

One of the objectives of a seismic event is to identify vulnerabilities of containment functions. These include containment integrity, containment isolation and prevention of bypass functions. Seismic capacities for these functions are as follows.

- Containment integrity
  - Containment
  - Containment spray and containment cooling System (involved in CS/RHRS)
- Containment isolation
  - Containment isolation valves and associated piping
  - Penetrations
  - Equipment hatches
- Prevention of bypass function
  - Main steam isolation valves

- Containment integrity

HCLPF of containment is 0.63g. The seismic capacity for CS/RHRS is identified higher than RLE PGA. Therefore there is a seismic margin for containment integrity.

- Containment isolation function

  HCLPF of containment isolation valves are 0.8g. The seismic capacity for safety-related I&C system and power distribution system to actuate containment isolation valves are also higher than RLE PGA. HCLPFs for penetrations and equipment hatches are greater than 0.5g.

- Prevention of containment bypass function

  Causes of containment bypass are interfacing LOCA (ISLOCA),and steam generator tube rupture. US-APWR has enhanced the plant design against an ISLOCA by increasing the design pressure. Therefore the frequency of ISLOCA is very low. Also HCLPF of steam generators is 0.67g and higher than RLE PGA. Therefore there is a seismic margin for containment bypass event.

The SMA results identified some risk insights as follows:

1. There are some important safety-related SSCs for which seismically induced failure would lead directly to core damage. In this SMA study, these SSCs have HCLPF values in excess of 0.50 g. If any of these SSCs were built with a HCLPF lower than 0.50g, the plant HCLPF would also be lower than 0.50 g.

2. The plant HCLPF is dominated by essential chiller units (0.50g), essential service water Intake structure (0.50 g), essential service water pipe tunnel (0.50g), fuel assembly (0.50g) and Class 1E gas turbine generators (0.50g). If those SSCs HCLPF value were to be increased to any value above 0.53 g, the plant HCLPF would increase to 0.53 g and would be dominated by the cable tray (0.53 g).

3. The analysis did not identify any important sequence containing mixed cutsets. The only sequences containing mixed cutsets which would lower the plant HCLPF to below 0.50 g when random failures occur are LOOP sequences which are initiated by failure of the ceramic insulators (0.08 g). However, the probability of such random failures occurring is low (i.e., less than 1.0E-03). This means that random failures are unlikely to occur in a seismically-initiated accident sequence.

4. No credit is taken for operator actions in this study. The plant HCLPF is dominated by failures of SSCs result in core damage directly, such as the failure of structures.

5. Depending on whether offsite power is available, different scenarios to trip the reactor are considered. In the case offsite power failed (i.e., a LOOP initiating event), the control rod motor generator sets would be de-energized following LOOP and succeed in the release of control rods into the core even if the reactor trip function failed. Only when the control rod system is failed would the reactor trip be failed. This scenario is considered in this study and the HCLPF value for this event is 0.67 g (dominated by the control rod HCLPF). In case offsite power

is available, the failure of the reactor trip function should be considered. However, the HCLPF for the reactor trip system would be higher than 0.67 g determined when offsite power is lost. This is because HCLPFs for electrical equipment and sensors/transmitters to trip the reactor are above 0.67 g. Thus, whether offsite power is available or not, the HCLPF value (i.e., seismic capacity) to trip the reactor is higher than the plant HCLPF of 0.50 g.

6. There are no vulnerabilities for containment performance (i.e., containment integrity, containment isolation and prevention of bypass functions) due to a seismic event.

19.1.5.2 Internal Fires Risk Evaluation

The US-APWR design features for reducing fire risk and use of the fire PRA in the design process are as follows.

- The US-APWR has four divisions of safety systems, and each division is segregated with a physical fire barrier so as to protect the safety function of those safety systems from the fire.

The fire PRA considered the US-APWR fire protection design that is effective to protect a fire within a single division, and therefore its risk is negligible in the event of a postulated fire.

- The cable routes connecting yard transformers (the main transformer (MT), the unit auxiliary transformers (UATs), and the reserve auxiliary transformers (RATs)) to the SWGR within the turbine building have a high risk because the fire frequency of the turbine building is high and its fire severity is large. Therefore, the cable route has been designed to pass through the outside of the turbine building.

- In the US-APWR, Alternate AC power sources (AAC) composed of gas turbine generators are back-up power sources for the emergency gas turbine generators and act as countermeasures against common cause failures. The AAC power sources and switchover panes are not located in turbine building.

- The T/B electrical rooms are separated from each other and from the T/B by partitions that can limit the propagation of fire for a minimum of 1-hour.

- The RATs are separated from each other and from the MT and the UATs by a minimum of 1-hour rated fire barriers or a minimum distance of 30 ft.

The following subsections describe the internal fires risk evaluation and its results.

19.1.5.2.1 Description of the Internal Fires Risk Evaluation

The fire PRA methodology for the US-APWR is based on NUREG/CR-6850 (Reference 19.1-7). This methodology and related data were developed jointly by EPRI and the NRC. NUREG/CR-6850 provides a state-of-the-art methodology for fire PRAs. The fire PRA methodology is composed of 16 tasks, described as follows:

Step 1: Plant boundary definition and partitioning – The objectives of this task are to define the global plant analysis boundaries relevant to the fire PRA, and to divide the plant into discrete physical analysis units (fire compartments). The fire compartments are the fundamental basis of fire PRA.

Step 2: Fire PRA component selection – This step establishes the link between internal events PRA model (i.e., plant response model) and internal fire PRA. The purpose of this step is to define the components that should be included in the CDF and LRF estimation process. The list of relevant components comes from the internal events analysis and often includes additional components unique to internal fire PRA.

Step 3: Fire PRA cable selection – For the components identified in the preceding step, the associated circuits (including cables) and their locations in terms of the fire compartments of defined in Step 1 are identified.

Step 4: Qualitative screening – Fire compartments that do not contain any fire PRA components or cables are screened from further analysis. Also, if it can be shown that a fire in a compartment cannot lead to a plant trip, those compartments are also screened.

Step 5: Plant fire-induced risk model – The purpose of this step is to create the model that will be used in estimating the fire risk (i.e., the plant response model is put together in this step). The initiating events and internal events model are examined for applicability to fire events. Additional fire induced initiating events that are unlikely to occur by the internal events are identified. Similarly, additional peculiarly fire accident sequences will also be identified.

Step 6: Fire ignition frequency – This is the first step where probability and frequency values are used. Database of fire ignition frequencies for specific ignition sources which is provided in NUREG/CR 6850 are used.

Step 7: Quantitative screening – The fire risk contribution of the compartments selected in the preceding steps are analyzed in this step. Initially, in this step it is assumed that the fire postulated in the fire compartment would fail the equipment and cables within the compartment. This assumption will be later relaxed if necessary and the quantitative screening is repeated for fire scenarios defined in more detail.

Step 8: Scoping fire modeling – This step is used for reducing the level of effort of the detailed analysis (Step 11). This step has been skipped in the US-APWR fire PRA.

Step 9: Detailed circuit failure analysis – For risk-significant fire compartments, more detailed circuit analysis than Step 3 analysis eliminate some of the cables in the compartments. The analysis in this step is typically conducted for components that appear in the dominant plant response sequences of quantitative screening steps.

Step 10: Circuit failure mode likelihood analysis – The failure mode probabilities are estimated for the cables of risk-significant components. The methodology provided in NUREG/CR 6850, which is based on knowledge gained from recent cable fire tests, is used.

Step 11: Detailed fire modeling – In this step initial fire characteristics, fire growth in a fire compartment, detection and suppression, damage from heat and smoke and many other relevant topics are addressed. This step is composed of following three parts:

1. Detailed fire modeling of single fire compartments;

   In this analysis, fire scenarios are defined in terms of ignition sources, target sets, fire growth, and propagation pattern and fire detection and suppression features. All fire PRA equipment and cables in the fire compartment in which fire origin are postulated will be assumed to be adversely impacted by the fire.

2. MCR fire analysis;

   This analysis is focused on the fire frequency and the human error the operation remote shutdown console in the situation for MCR evacuation due to the fire adverse effects.

3. Multi-compartment fire analysis.

   This analysis uses the screening steps to reduce the scope of detailed analysis. The screening criteria includes lack of additional fire PRA equipment in the adjacent fire compartment , low fire load in fire origin compartment which influences the probability of fire propagation, small fire scenario frequency, and finally CDF.

   Survived scenarios will be analyzed by the same method as for single compartment case.

Step 12: Post-fire HRA – Operator actions after fire ignition are assumed to be affected by the fire unless it can be clearly shown otherwise. In this step identification, inclusion, and quantification of operator action cases are addressed and their HEPs are estimated.

Step 13: Seismic fire interactions – The main purpose of this step is to identify and correct any weaknesses in the fire protection systems and vulnerabilities in the ignition sources due to seismic events. This is the qualitative evaluation that has been in NUREG/CR 6850 to ensure that the impact of earthquake on fire related issues are addressed. No risk are computed.

Step 14: Fire risk quantification – This is the final step of the analysis process, where the risk values (i.e., CDF and LRF) are computed and risk contributors are identified.

Step 15: Uncertainty and sensitivity analyses – Uncertainty analysis is an integral part of every preceding probabilistic analysis. Through a series of sensitivity analyses, the assumptions that have the largest impact on the fire risk are identified. One purpose of the sensitivity analysis is to demonstrate the importance of some of the assumptions.

Step 16: Fire PRA documentation – Appropriate documentation of the above steps is to be accomplished in this step.

Step 8 has not been applied in this fire PRA for the reasons described below.

- In Step 8, the methodology how to revise the compartment fire frequency and execute the screening of ignition sources by reviewing the location of ignition sources with respect to the targets is provided. This is undertaken to reduce the level of effort for the detailed analysis (Step 11). However, this task has conservatively been skipped because it is impossible to performed plant walk down for the design stage plant.

- A portion of Step 11, in which the method of giving the credit for the function of mitigating fire adverse effects to the fire detection and suppression system is provided, has been skipped, and the credit of those has not been taken.

Regarding Step 12, HRA has been performed for screening stage (Step 7).

Various assumptions and engineering judgments provide a basis for the internal fire analysis. The key assumptions and engineering judgments used in this analysis are as follows:

a. All fire doors between the redundant safety train fire compartments are normally closed, however, the barrier failure probability is considered.

b. Damage to any control circuit associated with a PRA component is assumed to (with a probability of 1.0) lead to spurious operation within the component.

c. Assume a fire causes initiating event “Transient”, if the fire does not cause any initiating event.

d. For transient combustibles, “three airline trash bags” are assumed to be located in each fire compartment.

e. The effects from fire generated heat and smoke may damage all equipment modeled in the PRA including the cables in the fire compartment in which the fire takes place. (No credit is taken for the fire suppression systems within the fire compartment)

f. There can be only one fire barrier failure and/or one fire damper failure at any given time. The cascading effect will be trivial due to the probability of simultaneous failure being low.

g. Transient combustibles having a potential heat release equivalent to 93,000 Btu (obtained from NUREG/CR-6850, “Appendix G, Table G-7, LBL-Von Volkinburg, Rubbish Bag” Test results) is assumed as a fire ignition source within containment.

h. The Heat Release Rates of various items specified in Chapter 11 of NUREG/CR-6850 are used.

i. Damage temperatures for thermoplastic cables as depicted in Appendix H of NUREG/CR-6850 are used as the target damage temperatures.

j. Stress levels following post-fire safe shutdown do not become higher following a fire for the following reasons:

- The communication system will remain active during a fire due to the redundant nature of the plant communication systems which are installed with a minimum of two verbal communication paths between all plant locations.

- The lighting system will remain operable during a fire because the emergency lighting system has a redundant power source for each fire area.

- Heat and smoke propagation to adjacent fire compartments are assumed to be extremely low due to the installation of the fire dampers installed in series within each HVAC duct passing through the fire compartment, therefore it is reasonable to ignore the stress increase due to their heat and smoke inhalation.

k. Recovery of equipment damaged by a fire is not expected. Also, if a fire has the potential to cause plant monitoring instrumentation and equipment to fail, no operator actions expected.

l. Human error probabilities of post-fire operator actions are assumed as follows.

- No credit has been taken for the operator actions of any equipment in the fire compartment affected by fire.

- The Fire Brigade is provided to meet the requirements of Regulatory Guide 1.189. Higher stress levels of human actions of post-fire are not assumed.

- The HEP for operations at the remote shutdown console are assumed to be 0.1.

m. It has been assumed that a “Challenging fire” for MCR shown in Table C-4 of appendix C of NUREG/CR-6850 causes an adverse operational environment in the MCR. Therefore, it has been assumed that a MCR “Challenging fire” may force the operators to abandon MCR and evacuate to the RSC room.

n. For a Level 2 PRA, it is assumed that firewater pumps may be used as mitigative actions for reactor cavity direct injection, providing water for containment spray even in the event of a fire.

o. An evaluation has been performed to assume the total damage with the fire-originating compartment so as to consider the influence from fire heat.

In first step, fire compartments have been defined through plant partitioning. And, in next step, the internal events PRA model for the US-APWR has been reviewed to identify the accident sequences that should potentially be included in the fire PRA model, and equipment to be included in the fire PRA component list has been identified. Some of the sequences included in the internal events PRA are eliminated from the fire PRA model. The elimination criteria of the sequences are as follows:

- Sequences associated with initiating events involving a passive/mechanical failure that can generally be assumed not to occur as a direct result of a fire. Therefore, initiating events that are caused by primary or secondary side pipe breaks, vessel failure, and SGTRs can be eliminated from the PRA model.

- Sequences associated with events that, while it is possible that fire could cause the events, a low-frequency of occurrence argument could be justified. For example, the anticipated transient without scram sequence has not been treated in the fire PRA because fire-induced failures will almost certainly remove power from the control rods (resulting in a trip), rather than cause a “failure-to-scram” condition. Additionally, fire frequencies multiplied by the independent failure-to-scram probability can be seen as small contributors to fire risk.

Table 19.1-57 provides a listing of the initiating events that were included and excluded in the fire PRA.

As a result, the following accident sequences have been eliminated from the fire PRA model.

- LOCAs (pipe break)
- RVR
- SGTR
- Feed water line break
- Anticipated transient without scram

Furthermore, cables associated with fire PRA components have been identified in each fire compartment.

In qualitative screening step, screening of fire scenarios has been performed. A fire scenario is classified into three types: (a) single-compartment fire scenario, (b) multi-compartment fire scenario, and (c) MCR fire scenario. In this step, singe compartment fire scenarios have been studied, and following compartments have been screened. :

- The compartment which does not contain any fire PRA components or cables, and
- The compartment of which fires will not lead to:
  - An automatic reactor trip
  - A manual reactor trip as specified in fire procedure, EOPs, or plant technical specifications

  However, such information as being contained in fire procedures and EOPs does not exist for the US-APWR at the present stage. Therefore, it has been assumed that every compartment within the reactor building, power source building, and turbine building (T/B) might contain cables which would require manual reactor

trip-operation in a fire scenario. And, access control building has been screened from further analysis because those buildings do not contain safety equipment.

In next step, fire ignition frequency has been estimated. Plant ignition sources have been classified in the ignition source specified in Table 6-1 of NUREG/CR 6850. The frequencies are based on fire event experience in the U.S. nuclear power plants prior to December 2000, the same frequencies are used in US-APWR fire PRA. NUREG/CR 6850 also presents the modeling method in which self ignition fire of cables should be postulated in “unqualified cables”. Therefore, self ignition fire of cable runs has been excluded from the ignition source bins because “qualified cables” will be adopted in US-APWR.

The oil collection system is provided to collect the lubricating oil that leaks from each RCP motor and route it to a collection tank. Therefore, postulation of a fire resulting from leaked lubrication oil is not credible. This fire scenario has been screened out in the quantitative screening process because of its insignificant effect, even though the fire occurrence uses conservative assumptions.

The fire ignition frequencies, fire propagation analysis, fire damage modeling and fire-induced failure mode, and plant response analysis and modeling are evaluated as follows.

(1) Estimation process of fire ignition frequencies

Fire ignition frequencies of each fire compartment of the US-APWR are estimated using the methodology and generic fire mean frequencies of NUREG/CR-6850. The estimation process for the fire ignition frequency for each fire compartment of the US-APWR is shown below:

- Mapping Plant Ignition Source to Generic Source
  In this step, the ignition sources of the US-APWR are assigned to the ignition source bins in Table 6-1 of NUREG/CR-6850.

- Fixed Fire Ignition Source Counts
  In this step, the types, amounts and location of existing fire ignition sources are identified.

- Calculation of Ignition Source Weighting Factor
  Using the counts of the preceding step, ignition source weighting factors are calculated for each fire compartment. For transient fires, the weighting factors are estimated using best estimates of anticipated conditions of the US-APWR plant.

- Ignition Source and Compartment Fire Frequency Evaluation
  Using the ignition source weighting factor of the preceding step and the fire mean frequency of Table 6-1 of NUREG/CR-6850, the fire ignition frequencies associated with each compartment are estimated.

At the design certification stage of the US-APWR, no plant-specific fire event data exist: therefore, the following tasks are not applicable to the US-APWR fire PRA.

- Plant Fire Event Data Collection and Review

- Plant Specific Updates of Generic Ignition Frequencies

(2) Fire propagation analysis

A fire inside the containment vessel (C/V) may spread to multiple fire PRA compartments of the C/V because the boundaries of each fire PRA compartment in the C/V are not composed of fire-resistant barriers. In this analysis, the CFAST code is used to simulate the fire behavior inside the C/V and fire effects in the fire origin compartment and adjacent compartments. According to the results of the CFAST simulation, it is confirmed that there is no fire in the C/V that spreads to adjacent fire compartments in the C/V. Therefore, the multiple compartments fire scenario for fire compartments in the C/V is not developed in this evaluation.

Conditions for CFAST simulation:

- Fire origin compartment is FA1-101-18 (A-Accumulator area),
- Adjacent compartments are FA1-101-15 (B-Accumulator area) and FA1-101-17 (D-Accumulator area),
- Heat release rate given in Chapter 11 of NUREG/CR-6850 is used,
- Damage temperature of the thermoplastic cable shown in Appendix H of NUREG/CR-6850 is applied.

(3) Fire damage modeling and fire-induced failure mode

The fire-induced failure mode of various components is studied by considering the component status in the normal operation mode and the function required for post-accident mode. The fire-induced failure modes considered in the fire PRA of the US-APWR are as follows:

- Spurious Operation
- Fail to Start/Run
- Fail to Close/Open

The failure modes of components with fire-damaged cables or circuits are identified by the detailed circuit failure analysis. The process of the detailed circuit failure analysis in this evaluation is shown below:

- Compile and Evaluate Prerequisite Information and Data
  In this step, the components and their cables subjected to circuit failure analysis are identified.
- Perform Detailed Circuit/Cable Failure Analysis
  In this step, a circuit analysis per NUREG/CR-6850 is conducted to establish the possibility of spurious actuation due to fire-induced circuit failure. Typical circuit failure modes described in Figure B3.3 of NFPA 805 and associated circuits shown in Figure B.3.4 of NFPA 805 are used as a reference.

- Generic Equipment Failure Response Analysis
  In this step, a matrix of fire compartments, fire PRA components in each compartment (including associated cables) and damage states of components due to fire are developed.

(4) Plant response analysis and modeling

To evaluate plant response to a fire, the following three groups of fire scenarios are developed:

- Single compartment fire scenario
- MCR (Main Control Room) fire scenario
- Multiple compartments fire scenario

For a single compartment fire scenario, it is assumed that a fire would have widespread impact within the concerned compartment, and the fire risk is evaluated by identifying the fire-induced initiating event and the fire mitigation function. For the MCR fire scenario, fire risk is evaluated by considering evacuation to the RSC (Remote Shutdown Console) room from the MCR and shutdown from the RSC. The multiple compartments fire scenario is developed following the steps described in Task 11 of NUREG/CR-6850, and the fire risk of each multiple compartments fire scenario is estimated by assuming that a fire would have widespread impact within the compartments concerned similar to the single compartment fire scenario.

19.1.5.2.2 Results from the Internal Fires Risk Evaluation

The internal fire risk evaluation of US-APWR is performed using the design specific fire protection features on the DCD Chapter 9 Appendix 9A and the internal PRA model of DCD 19.1.4.

Quantitative screening has been performed to screen some fire compartments from further analysis.

In this step, three types of fire scenarios of (a) single-compartment fire scenario, (b) multi-compartment fire scenario, and (c) MCR fire scenario have been addressed separately. In type (a) and (c) fire scenario, it has been postulated that the heat and smoke generated by the fire may affect the function of all PRA equipment and cables installed in the fire compartment. In type (b) fire scenario, fire propagation to adjacent fire compartment has been postulated with the failure probability of one fire barrier.

“RiskSpectrum”®PRA code has been used to quantify CDF of US-APWR. Any fire suppression system has been not credited. Damage probability of cable system has been estimated through Circuit Failure Mode Likely Analysis. HEP has been estimated by using ASEP.

Screening has been performed based on the criteria specified in NUREG/CR-6850 (Reference 19.1-7) which provides two screening criteria.

The first criterion is given in Table 7-2 of NUREG/CR-6850 as:

- CDF < 1.0E-07/year
- LERF < 1.0E-08/year

The second criterion is given in Table 7-3 of NUREG/CR-6850 as:

- Sum of CDFs for all screened out fire compartments< 0.1*Internal event CDF
- Sum of LRFs for all screened out fire compartments< 0.1*Internal event LERF

Practically the value for CDF screening analysis is conservatively established as 5.7E-09/RY, in order to satisfy the second screening criterion. As a result, CDF of all screened out sequences has been within 10% of internal event CDF.

Also, practically the value for LRF screening analysis is conservatively established as 1.0E-09/RY, in order to satisfy the second screening criterion. As a result, LRF of all screened out sequences has been within 10% of total internal event LRF.

In detailed fire modeling following three situations have been addressed:

A. Single compartment fire scenario

B. Fire scenario in the MCR

C. Fire scenario impacting multiple compartments

After having screened single compartment scenarios based on the second criteria, 12 fire compartments scenarios have remained. These are shown in Table19.1-58. For these 12 scenarios, the necessity of detailed fire modeling has been evaluated by comparing CDF contribution of each scenario with 1.0E-07/year. Consequently, the necessity of detailed fire modeling has been identified for the following fire compartments.

- Yard (Switchyard)
- FA6-101-01 (Turbine building other floor)

However, detailed fire modeling has not been performed because the detailed design information on the Switchyard and T/B has not yet been sufficient at this stage, and the risk of these compartments has not been so high. Hence, detailed fire modeling has not been performed for any single compartment.

In some severe fire scenario for the MCR, it has been assumed that operators will abandon the MCR and evacuate to the remote shutdown panel room.

The following are included in the analysis:

- The damage of digital control systems including control boards in the MCR due to fire will cause open circuits in equipment control systems (resulting in fail as-is conditions). This means MCR fire will not affect the automatic start function of safety related equipment like ECCS;
- MCR evacuation scenario is modeled as a transient without the main FWS.

Quantitative screening analysis has been performed to determine if detailed analysis is required for any multiple compartment scenarios. This screening has evaluated (1) qualitative factors (e.g., do the exposed compartment(s) contain any fire PRA components or cables); (2) frequency of occurrence; and (3) CDF. The results of these screenings are shown in Table19.1-59. Eleven multiple compartments fire scenarios have been remained from the screening analysis, and, as can be seen in the table, the CDF of every fire scenario has been less than the 1.0E-07/year screening criterion. Therefore, detailed analysis for those scenarios has not been performed.

In addition to the above, inside C/V fire has been simulated by CFAST code (Reference 19.1-38), and fire effect in the fire origin compartment and adjacent fire compartment has been analyzed. In this analysis, the following condition has been set:

- Fire origin compartment is FA1-101-18 (A- Accumulator area);
- Adjacent fire compartments are FA1-101-15 (B- Accumulator area) and FA1-101-17 (D- Accumulator area);
- Fire ignition source is transient combustibles whose total heat release is equal to 93,000 BTU (refer to NUREG/CR-6850 (Reference 19.1-7), “Appendix G table-7 LBL-Von Volkinburg, Rubbish Bag” Test results);
- Heat release rate given in Chapter-11 of NUREG/CR-6850 is used;
- Damage temperature of thermoplastic cable shown in Appendix H of NUREG/CR-6850 is applied.

The result of the CFAST simulation has shown that the temperature of each compartment does not reach to the damage temperature of thermoplastic cable. This means that the fire influence due to the transient combustible fire will be negligible. Therefore, a multiple compartment fire scenario has not been developed in the inside C/V fire scenario analysis.

Using the results of previous tasks, the fire induced CDF and LRF for the US-APWR have been estimated as follows:

Total CDF

Single compartment fire scenario	= 6.7E-07/RY
MCR fire scenario	= 8.5E-09/RY
Multi compartments fire scenario	= 1.8E-07/RY
Total	= 8.6E-07/RY

Total LRF

Single compartment fire scenario	= 1.0E-07/RY

MCR fire scenario = 7.1E-10/RY

Multi compartments fire scenario = 8.4E-08/RY

Total = 1.9E-07/RY

Dominant Scenarios (CDF)

Yard (Switchyard) = 2.6E-07/RY

FA6-101-01 (T/B other floor) = 2.0E-07/RY

FA6-101-04 (FA6-101-04 zone) = 6.0E-08/RY

FA2-202 (A Class 1E electrical room) = 4.3E-08/RY

FA2-205(D Class 1E electrical room = 2.8E-08/RY

FA2-205-M04 (Multiple Compartments Fire Scenario from FA2-205 to FA2-206) =2.8E-08/RY

FA2-202-M04 (Multiple Compartments Fire Scenario from FA2-202 to FA2-201) =2.7E-08/RY

Dominant Scenarios (LRF)

FA6-101-01 (T/B other floor) = 2.2E-08/RY

Yard (Switchyard) = 1.7E-08/RY

FA2-205-M04 (Multiple Compartments Fire Scenario from FA2-205 to FA2-206) = 1.7E-08/RY

FA1-101-17 (C/V 3F northwestern part floor zone) = 1.6E-08/RY

FA2-202-M04 (Multiple Compartments Fire Scenario from FA2-202 to FA2-201) = 1.6E-08/RY

FA2-202 (A Class 1E electrical room) = 1.3E-08/RY

Dominant fire scenarios for CDF and LRF are described below. Dominant fire scenarios for CDF account for about 90 percent of total CDF. Each dominant fire scenario for LRF accounts for over 5 percent of total LRF.

Yard Fire (Switchyard)

A main transformer, four unit auxiliary transformers and four reserve auxiliary transformers are individually located on each fire compartment in the switchyard. A fire of each transformer may cause a cascade of failure of transformer and all transformers

located in switchyard become unavailable, and it results in LOOP. Fire ignition frequency of the fire is 6.0E-03/RY.

This fire may cause LOOP (loss of offsite power), and it also may make the recovery of all power sources impossible. CCDP of this fire scenario has been estimated to be 4.3E-05.

Fire scenario postulated is as follows:

- Fire may cause LOOP because one of main transformer, unit auxiliary transformers, and reserve auxiliary transformers located in switchyard may be damaged by the fire.
- Offsite power cannot be recovered because the fire may damage both of main transformer and reserve auxiliary transformer.
- All four Class 1E gas turbine generators could not be operated by random failure.
- Operator may fail to connect the emergency power bus to AAC by the human error.
- Reactor has the potential to cause the loss of all power supplies of safety systems

The CDF of this fire scenario is 2.6E-07/RY and account for 29.9% of total CDF. The LRF of this scenario is 1.7E-08/RY and accounts for 8.9% of total LRF.

<u>FA6-101-01 (T/B other floor) fire</u>

FA6-101-01 consists of many compartments in T/B and occupies large floor area, and many fire ignition sources are contained in this fire compartment. Fire ignition frequency of this fire compartment is 5.6E-02/RY.

This fire compartment contains turbine bypass valves whose spurious operation due to fire leads to reactor transient, but any mitigation system such as EFWS and ECCS are not damaged by this fire. Therefore, CCDP of this fire scenario is low, and has been estimated to be 3.6E-06.

The CDF of this scenario is 2.0E-07/RY and account for 23.1% of total CDF. The LRF of this scenario is 2.2E-08/RY and accounts for 12.0% of total LRF.

<u>FA6-101-04 (FA6-101-04 zone) fire</u>

FA6-101-04 has the potential of transient combustibles fire and cable fire caused by welding or cutting and so forth, whose fire ignition frequency is 1.4E-03/RY.

This area also contains all four trains of cables connected to safety bus ducts from offsite power sources. Therefore, the fire in this area may cause LOOP, and it may make the recovery of every power sources impossible. And, CCDP of this fire scenario has been estimated to be 4.3E-05.

Fire scenario is as follows:

- Fire may cause LOOP because it may damage all four train cables to Class 1E bus ducts from offsite power located in FA6-101-04.
- Offsite power cannot be recovered because fire may damage all four train of Class 1E bus duct cable from offsite power sources.
- All four Class 1E gas turbine generators could not be operated by random failure.
- Operator may fail to connect the emergency power bus to AAC by the human error.
- Reactor has the potential to cause the core damage by causing the loss of all power supplies of safety systems.

The CDF of this scenario is 6.0E-08/RY and account for 7.0% of total CDF. The LRF of this scenario is 3.9E-09/RY and accounts for 2.1% of total LRF.

FA2-202 (A Class 1E electrical room) fire

FA2-202 contains A-train Class 1E electrical cabinets of mitigation system and their cables, and those have the potential of fire ignition sources in this fire area. Fire ignition frequency of FA2-202 is 2.2E-03/RY.

A fire in FA2-202 has the potential to damage A-train mitigation system function of metal clad switchgear and control center. Therefore, a safety depressurization valve, A-safety injection pump, A-CCW pump and A-ESW pump may be unavailable. In addition, feedwater isolation valves to steam generator-A and B have the potential of spurious closure due to their control cables damaged and it results in loss of emergency feed water supply to two steam generators.

The CDF of this scenario is 4.3E-08/RY and account for 5.0% of total CDF. The LRF of this scenario is 1.3E-08/RY and accounts for 6.7% of total LRF.

The reason why the CDF of FA2-202 fire scenario is higher than that of FA2-203 (B Class 1E electrical room) and FA2-204 (C Class 1E electrical room) fire scenarios is the difference in CCDPs quantified based on the availability of mitigation function for fire-induced initiating events. The fire compartment of FA2-202 contains the power/control cables of A-T/D EFW pump steam supply line motor-operated valve. If the fire affects this component, A-T/D EFW pump may fail to start. The fire compartments of FA2-203 and FA2-204 contain B or C-Class 1E electrical cabinet that result in failure to start a M/D EFW pump. Failure probability of the M/D EFW pump is higher than that of the T/D EFW pump because M/D pumps required its support systems (e.g. HVAC system of M/D pump room, Emergency chilled water system) and these systems may be also failed.

The reason why the CDF of FA2-202 fire scenario is higher than that of FA2-205 (D Class 1E electrical room) fire scenarios is also the difference in CCDPs. The fire compartment of FA2-202 contains the A-train Class 1E electrical system that supply power to the mitigation system of A-train, and that of FA2-205 contains the D-train one. However, the fire of each fire compartment can not affect remain three trains. The mitigation systems of

B, C and D-train are available in FA2-202 and those of A, B and C-train are available in FA2-205. However, CCDPs of these fire scenarios are not equal. Condition of train-A and train-C of some support systems such as CCW and ESW is running. That of train-B and train-D is standby. Failure probability of standby systems is higher than that of running systems because the standby system may be failed to start. Therefore, CCDP of FA2-202 fire that one running system and two standby systems are available is higher than that of FA2-205 fire that two running systems and one standby system are available.

FA2-205 (D Class 1E electrical room) fire

FA2-205 contains D-train Class 1E electrical cabinets of mitigation system and their cables, and those have the potential of fire ignition sources in this fire area. Fire ignition frequency of FA2-205 is 2.2E-03/RY.

A fire in FA2-205 has the potential to damage D-train mitigation system function of metal clad switchgear and control center. Therefore, a safety depressurization valve, D-safety injection pump, D-CCW pump and D-ESW pump may be unavailable. In addition, feedwater isolation valves to steam generator-C and D have the potential of spurious closure due to their control cables damaged and it results in loss of emergency feed water supply to two steam generators.

The CDF of this scenario is 2.8E-08/RY and account for 3.3% of total CDF. The LRF of this scenario is 8.6E-09/RY and accounts for 4.6% of total LRF.

The reason why the CDF of FA2-205 fire scenario is higher than those of FA2-202, FA2-203 and FA2-204 fire scenarios are the same as described in FA2-202 fire scenario.

FA2-205-M04 fire

This fire scenario is the fire propagation from D-train Class 1E electrical room (FA2-205) to corridor (FA2-206). Fire ignition frequency of FA2-205-M04 is 2.2E-03/RY, same as the single compartment fire scenario of FA2-205.

FA2-205 contains the cables of safety depressurization valve, and FA2-206 contains the cables of safety depressurization valve isolation valve. This fire scenario has the potential to cause spurious opening of safety depressurization valve due to the control cable damage, and it may result in SLOCA. The fire scenario also has the potential to damage D-train of metal clad switchgear, control center and dc control center, and it may result in loss of C and D-trains mitigation functions. The fire scenario also damages the control cables of accumulator outlet valve or nitrogen line isolation valve of every accumulator, and it may result in loss of accumulator function. CCDP of this fire scenario is low; and has been estimated to be 1.7E-03.

Postulated fire scenario is as follows.

- Spurious opening of pressurizer safety depressurization valve and failure to close safety depressurization valve isolation valve result in SLOCA.
- If safety injection system becomes unavailable by random failure or failure of support system such as ESWS, reactor has the potential to cause core damage and large release.

The CDF of this scenario is 2.8E-08/RY and account for 3.3% of total CDF. The LRF of this scenario is 1.7E-08/RY and accounts for 8.9% of total LRF.

FA2-202-M04 fire

This fire scenario is the fire propagation from A-train Class 1E electrical room (FA2-202) to FA2-201 Corridor (FA2-201). Fire ignition frequency of FA2-202-M04 is 2.2E-03/RY, the same as single compartment fire scenario of FA2-202.

FA2-202 contains the cables of safety depressurization valve, and FA2-201 contains the cables of safety depressurization valve isolation valve. This fire scenario has the potential to cause spurious opening of safety depressurization valve due to the control cable damage, and it may result in SLOCA. The fire scenario also has the potential to damage A-train of metal clad switchgear, control center and dc control center, and it may result in loss of A and B-trains mitigation functions. The fire scenario also damages the control cables of accumulator outlet valve or nitrogen line isolation valve of every accumulator, and it may result in loss of accumulator function. CCDP of this fire scenario is low; and has been estimated to be 1.6E-03.

Postulated fire scenario is as follows.

- Spurious opening of pressurizer safety depressurization valve and failure to close safety depressurization valve isolation valve result in SLOCA.
- If safety injection system becomes unavailable by random failure or failure of support system such as ESWS, reactor has the potential to cause core damage and large release.

The CDF of this scenario is 2.7E-08/RY and account for 3.2% of total CDF. The LRF of this scenario is 1.6E-08/RY and account for 8.3% of total LRF.

The top 10 cutsets of CDF including the above sequences are shown in Table 19.1-60. Sum of other event sequences is approximately 20% of the total CDF. The top 10 cutsets of LRF including the above six dominant sequences are shown in Table 19.1-61.

Importance analysis for CDF has been performed to determine the following:

- All basic event importance
- CCF importance
- Human error importance
- Component importance

The results of importance are organized by a Fussell Vesely (FV) importance and risk achievement worth (RAW). Risk significant basic events which have FV importance equal or greater than 0.005 and RAW equal or greater than 2.0 are listed in Table 19.1-62 and Table 19.1-63, respectively. For CCF, Human error and Component importance, top 10 important events based on FV importance and RAW are shown in Tables 19.1-64 through 19.1-69.

The most significant basic event, based on the FV importance, is as follows:

RCP—SEAL (RCP SEAL LOCA) – This basic event applies only to condition where total loss of ac power occurs after LOOP without offsite power recovery, and its probability has set to 1.0. If offsite power could not be recovered within one hour, RCP seal LOCA will be postulated to occur. The plant CDF is decreased by a factor of 38% if the probability of this failure is set to 0.0.

The most significant basic event, based on the RAW importance, is as follows:

RTPBTSWCCF (BASIC SOFTWARE CCF) – The plant CDF would increases approximately 7.5E+04 times if the probability of this failure is set to 1.0. If this failure occurs, all of safety and non-safety I&C system become unavailable. Therefore, plant safe shut-down can be achieved with only DAS (Diverse Actuation System).

The most significant common cause basic event, based on the FV importance, is as follows:

EPSCF4DLLRGTG-ALL (CLASS-1E GTG A,B,C,D FAIL TO RUN AFTER FIRST HOUR OF OPERATION (CCF)) – This basic event applies to conditions after LOOP. If all four Class 1E gas turbine generators failed to operation due to CCF, total loss of ac power occurs. The plant CDF is decreased by a factor of 24% if the probability of this failure is set to 0.0.

The most significant common cause basic event, based on the RAW importance, is as follows:

RTPBTSWCCF (BASIC SOFTWARE CCF) – The plant CDF would increases approximately 7.5E+04 times if the probability of this failure is set to 1.0. If this failure occurs, all of safety and non-safety I&C system become unavailable. Therefore, plant safe shut-down can be achieved with only DAS (Diverse Actuation System).

The most significant human error basic event, based on the FV importance, is as follows:

EPSOO02RDG ((HE) FAIL TO CONNECT THE ALTERNATE AC POWER SOURCE TO CLASS 1E BUS) – This basic event applies only to LOOP conditions where the Class 1E gas turbine generators have failed to supply power. If the operator fails to connect AAC power to Class 1E buses, total loss of ac power occurs. The plant CDF is decreased by a factor of 30% if the probability of this failure is set to 0.0.

The most significant human error basic event, based on the RAW importance, is as follows:

HPIOO02FWBD-S ((HE) FAIL TO OPEN SAFETY DEPRESSURIZATION VALVE) – The plant CDF would increase approximately 4.6E+01 times if the probability of this failure were set to 1.0. If the operator fails to operate this action where secondary side cooling has failed, core damage occurs. The plant CDF would increase approximately 4.6E+01 times if the probability of this failure were set to 1.0. If the operator fails to operate this action where secondary side cooling has failed, core damage occurs.The most significant hardware single failure event, based on the FV importance, is as follows:

RCP—SEAL (RCP SEAL LOCA) – This basic event applies only to condition where total loss of ac power occurs after LOOP without offsite power recovery, and its probability has set to 1.0. If offsite power could not be recovered within one hour, RCP seal LOCA is assumed to occur. The plant CDF is decreased by a factor of 38% if the probability of this failure is set to 0.0.

The most significant hardware single failure event, based on the RAW importance, is as follows:

EFWXVEL006A(B) (EFS-VLV-006A(B) EXTERNAL LEAK LARGE) – The plant CDF would increase approximately 1.6E+03 times if the probability of this failure were set to 1.0. If this failure occurs, EFWS cannot function because of water from emergency feed water pit-A (B) leaks due to failure of VLV-006A (B) and it cannot connect to the other emergency feed water pit B (A) and secondary demineralized water tank.

From the dominant scenarios and their dominant cutsets of LOOP in LRF scenarios, CCF of gas turbine generators and failure of operator action of connecting AAC GTG to Class 1E bus have been identified as risk significant failures and human errors.

In transient scenario, turbine driven EFW pump, operator actions of opening the valve of EFW pit discharge cross tie-line and FAB have been identified as significant functions and operator actions.

In Level 1 analysis, sensitivity analysis has been performed for fire suppression system. In this analysis any fire suppression system has not been credited. However, fires occurring in existing plants are generally extinguished by automatic suppression system or manual action before the fire grows and causes the functional damage of safety components. A sensitivity analysis has, therefore, been performed using failure probability 0.1 to evaluate the effects of fire suppression system. Credit of fire suppression for inside C/V fire scenarios, however, has not been taken. Using a failure probability of 0.1 for fire suppression system, CDF reduced to 10 percent.

A sensitivity analysis has also been performed for gas turbine fire. However, the increase of CDF is negligible because any equipment that might cause important initiating event and fire scenario has not been installed in this area.

In Level 2 analysis, it has been assumed that the firewater pumps can be used for reactor cavity flooding after fire events. A sensitivity case has been performed assuming that the firewater pumps cannot supply firewater to reactor cavity flooding system and spray header after core melt. If the firewater pump cannot be used, LRF will increase by approximately 75% comparing with the case that it can be used.

Uncertainty analysis for CDF has been completed based on the followings:

- In fire frequency analysis, lognormal distribution with the mean and standard deviation from Table C.3 of NUREG/CR 6850 has been used
- Uncertainty of conditional core damage probability has been derived from the internal events uncertainty

Uncertainties in the evaluation of different fire scenarios are evaluated using a Monte Carlo process. The plant CDF uncertainty range is found to be 2.7E-06/RY to 2.1E-07/RY for the 95% to 5% interval.

- 95th percentile 2.7E-06/RY
- Mean 8.6E-07/RY
- Median 6.3E-07/RY
- 5th percentile 2.1E-07/RY

The plant LRF uncertainty has been examined, and the results of those are as follows.

This uncertainty calculation is considered about 90% contribute scenarios of LRF.

- 95th percentile 5.1E-07/RY
- Mean 1.9E-07/RY
- Median 1.5E-07/RY
- 5th percentile 5.2E-08/RY

Internal fire PRA find out the following insights.

The total CDF of fire PRA is almost equivalent to the total CDF value of Internal PRA. This is because the credit for mitigation function of fire detection and suppression system has not been taken in US-APWR fire PRA.

Most significant fire scenario is LOOP due to yard fire, and the next is SLBO (Turbine-bypass valve spurious open) due to FA6-101-01 (Turbine Building Other Floor) fire. CDF of these fire scenario is 53 percent of total CDF.

The probability of cable hot-short due to fire damage was set to 1.0 conservatively. Despite this assumption, the contribution to total fire risk of US-APWR was small. That is because dominant fire initiating event was LOOP and other initiating events caused by the cable hot-short do not contribute significantly to the total fire risk.

Sensitivity analysis has been performed about the fire frequency of gas turbine, the fire mitigation probability of fire detection and suppression system, the probability of fire-induced cable hot-short occurrence, the probability of main control room evacuation due to fire and the effects of transient combustibles in inside containment areas. Except the effect of fire detection and suppression system, their effects were not significant.

Operator actions at remote shutdown console during main control room evacuation are the only human actions special to fire PRA. A sensitivity analysis has been performed conservatively using failure probability 1.0 to determine the effects of manual operation from remote shutdown console. Therefore, the risk significant operator action such as

changeover EFW pit and F&B from RSC room is unavailable. As a result, MCR fire scenarios are risk significant, and total of fire induced CDF is higher than twice.

In situ combustibles inside containment vessel are not significant, and therefore, it has been conservatively assumed that transient materials are in place. It has been confirmed through the sensitivity analysis that the amount of combustible materials will not affect the fire circumstances of fire compartments where redundant safety function exists.

The total LRF value of internal fire PRA is approximately twice of the total LRF value of internal events PRA. Additionally CCFP (Conditional Containment Failure Probability) value of internal fire PRA remained in about 0.22 times of the CCFP value of internal events PRA.

Fire compartments of the US-APWR significant to fire risk of CDF are the Yard, FA6-101-01 (Turbine building (T/B) Other Floor), and FA6-101-04 (FA6-101-04 zone). A Yard fire is also the dominant scenario to fire risk of LRF. A fire in the fire compartment "Yard" and a fire in the fire compartment "FA6-101-04" have the potential to cause loss of offsite power (LOOP). Additionally, simultaneous occurrence of the failures of all Class 1E gas turbine generators start-up and the operator actions to switchover a Class 1E bus to an alternate alternating current (AAC) power sources will lead to a station blackout. In these cases, conditional core damage probability (CCDPs) of these fire scenarios are higher than those of other fire scenarios, and this is the reason why fires in these compartments are the dominant fire scenarios to core damage. FA6-101-01 contains a large amount of combustible materials compared with other fire compartments, and therefore, the fire frequency of this fire compartment is high. This is the reason why the CDF of this fire compartment is higher than the other fire scenarios, though no mitigation system is damaged in this fire scenario.

The dominant fire-induced initiating events are LOOP and SLBO. In order to cope with these initiating events, the EFWS (Emergency Feed-Water System) is required to cool down the RCS in order to prevent core damage. When EFWS is not available, the actuation of the pressurizer safety depressurization valve is required in order to bleed the inventory of the RCS. Therefore, the functions of the EFWS and the Pressurizer control system are significant against fire risk.

In this analysis, no credit has been given to any fire suppression system of the fire compartments. The CDF of those fire compartments is sufficiently low. The credit to the Yard fire suppression system has not been given because the detailed information about the feature of the suppression system has not been established at the design certification phase.

Every fire compartment except for the fire compartments in the containment vessel and in the Yard is composed of a fire resistant wall, floor, and ceiling; therefore, all four ESF trains are segregated individually. The fire PRA identified that there is no significant multiple compartments fire scenario to fire risk in the US-APWR and that the fire risk of the multiple compartments fire scenario between the MCR and the Class 1E I&C rooms is not significant. In addition, a fire in any fire compartment in the containment vessel will not spread to adjacent fire compartments by the CFAST simulation.

Significant operator actions of the post fire accident derived from the importance analysis are the action of connecting a Class 1E bus to the AAC in case of a start-up failure of all four Class 1E gas turbine generators. This operator action is important because this action is necessary to cope with a station blackout resulting from LOOP events, which is the dominant fire-inducing initiating event.

Sensitivity analysis has been performed about the fire protection water supply system as mitigation feature for severe accident. As a result, it has been confirmed that the LRF value of internal fire PRA is greatly decreased if the fire protection water supply system can be used.

Electrical room in turbine building has been divided to two fire compartments by the fire barrier. It has resulted in the reduction of the fire risk.

The release categories are defined as the end state of the containment event tree (CET). The release categories for internal fire events at power are defined as the same with the ones for internal events at power. These release categories are described below.

- RC1: Containment bypass
- RC2: Containment isolation failure
- RC3: Containment overpressure failure before core damage
- RC4: Early containment failure
- RC5: Late containment failure
- RC6: Intact containment

The approach for quantification of release categories for internal fire events is basically the same with the one for internal events at power, i.e. the frequency of each release category is calculated from CET.

The frequency of each release category for internal fire events is evaluated as shown in Table 19.1-175.

Source terms for internal fire events are evaluated by employing MAAP 4.0.6 code although they are done by a simplified manner, because the representative accident sequence of each release category can be bounded by the ones evaluated for the internal events and internal flood events. The sequences that are similar or more severe in terms of the source term are selected from the analyzed sequences for internal events or internal flood events. The evaluation results employing MAAP 4.0.6 code for those representative sequences are applied to the corresponding release categories as shown in Table 19.1-176.

19.1.5.3 Internal Flooding Risk Evaluation

The US-APWR design features for reducing internal flooding risk and use of the internal flooding PRA in the design process are as follows.

The US-APWR is expected to satisfy the NRC safety goal and to reduce or eliminate known weaknesses of existing operating plants that are applicable to the new design by introducing appropriate features and requirements. The US-APWR has safety-related SSCs in the reactor building (R/B) and power source buildings (PS/B). Therefore, the US-APWR introduced the following design requirements to protect the R/B and PS/B against internal flooding:

- Prevent the flood propagation to multiple mitigation systems (more than two out of four trains of safety systems in the R/B and PS/B) by:
  - Separation of the R/B into two areas of an east side and a west side.
  - Installation of water-tight doors for the safety-related SSC areas, safety-related electric I&C rooms, and main control room.
  - Requirement of the isolation of a flooded essential service water pump within 15 minutes to prevent inflow into the R/B.
- Prevent inflow into the R/B from adjoining buildings, such as the T/B and A/B.
  - Install water-tight doors between the R/B and adjoining buildings.
- Install flood relief panels on the T/B exterior walls to drain the flooded water from the circulating water system to the yard.

The following subsections describe the internal flooding risk evaluation and its results.

19.1.5.3.1 Description of the Internal Flooding Risk Evaluation

Internal flooding risk was evaluated using qualitative and quantitative methods, as discussed below. The internal flooding analysis was performed to identify, analyze, and quantify the core damage risk contribution as a result of internal flooding. The internal flooding analysis models potential flood vulnerabilities in conjunction with random failures modeled as part of the internal events PRA. Through this process, flood vulnerabilities that could jeopardize core integrity have been identified.

The internal flooding PRA is organized into three phases. In the first phase of the internal flooding PRA, qualitative evaluation, the information that is needed for the Internal flooding PRA is collected and the initial qualitative analysis steps are performed. The four key steps are (1) identification of flood areas and SSCs; (2) identification of flood sources and flooding mechanisms; (3) performance of plant walk downs (alternatively, perform tabletop examination at design certification stage and COL phase); and (4) perform qualitative screening by considering flood source and mode, and flood propagation pathways; and screen out areas free of flood sources, critical equipment, and propagation potential. The major outputs of the first phase include screening of plant flood areas based on criteria associated with flood sources, identifying flood propagation pathways, identifying potential impacts of floods on SSCs, and selecting flood areas for quantitative evaluation.

The second phase is the quantitative evaluation. Quantitative evaluations of plant locations that have not been screened out are addressed in six separate steps. These

steps are organized around the key steps in defining flood scenarios and quantifying their impacts in the PRA model in terms of their contributions to CDF and LRF, and entail (1) flood scenario characterization; (2) flood initiating events analysis; (3) flood consequence analysis; (4) flood mitigation evaluation; (5) PRA modeling of flood scenarios; and (6) PRA quantification. These steps include the definition of flood scenarios in terms of flood initiating events, the consequences of the flood on SSCs, and the interfacing of the flood scenario with the PRA event tree and fault tree logic. Once the scenarios have been properly characterized, this phase also addresses the quantification of the flood initiating event frequency, CDF, and LRF. The last phase, which is the documentation phase, is an ongoing effort that is being performed along with each of the steps noted above for the qualitative evaluation and quantitative evaluation phases.

The scope of the internal flooding risk evaluation is normal power operations as well as low power and shutdown operations. Reviews of operating experience data show that on the order of one-third of recorded significant internal flooding events have occurred during shutdown operations.

The internal flooding analysis does not include an evaluation of flooding inside the containment structure. During routine power operation the containment is closed and independent of other buildings from a flooding standpoint. The equipment inside this structure is qualified for a post-accident environment, which includes the effects of CSS actuation. Any adverse effects of water accumulation due to loss of primary coolant are considered in the LOCA models. Therefore, flooding is not a unique threat to the operability of equipment in the containment, and the structure is not included in internal flooding PRA.

It is noted that high-energy line breaks (HELB) is evaluated in Chapter 3, Section 3.6, and “Protection Against Dynamic Effects Associated with the Postulated Rupture of Piping.”

Various assumptions and engineering judgments provide a basis for the internal flooding analysis. The key assumptions used in this analysis are as follows:

a. Flooding resulting from pipe and tank ruptures is considered. However, concurrent spray or flooding from different sources are not considered

b. The loss of functions of electric equipment such as motors, electrical cabinets, solenoid valves and terminal boxes by spraying or flooding is assumed

c. Components such as check valves, pipes and tanks are not vulnerable to effects of flooding

d. The components that are environmentally qualified are considered impregnable to spraying or submerge effects. Also component failure by flooding will not result in the loss of an electrical bus

e. Internal flooding PRA is developed based on internal events PRA models. However, operator actions in flooded areas are not assumed

f. Operator actions to isolate or mitigate flood sources are not assumed except the actions in the MCR and break room

g. Flooding inside of containment is not included in the internal flooding PRA because inside of containment vessel is designed and evaluated for LOCA events

h. Walls are assumed to remain intact against flooding events since they are designed to withstand anticipated maximum flood loading. Flood propagation from the flood areas which enclosed by water tight doors are considered if the flood water is much and high water level in the area

i. Fire protection doors that are not water tight are conservatively assumed as flood propagation paths for flood and major flood scenarios

j. Penetrations within the boundaries between the restricted area and non-restricted area are sealed and doors or dikes are provided for openings. Therefore, flood propagation, except for major flood events is not considered

k. R/B is separated in two divisions (i.e. east area and west area). This design prevents loss of all safety systems though postulated major floods that leak water exceeding the capacities of flood mitigation systems. East side and west side of reactor building (R/B) are physically separated by flood propagation preventive equipment such as water tight doors. Therefore, flood propagation between east side and west side in the reactor building is not considered

l. Drain systems are designed to compensate with flood having flow rate below 100 gpm. Flood with flow rate below 100 gpm will not propagate to other areas due to the drain systems

m. Watertight doors are provided for the boundaries between R/B and A/B in the bottom floor and between R/B and T/B in flood area 1F so that this measure prevents flood propagation from non-safety building to R/B

n. Flooding of ESW system can be isolated within 15 minutes. The leaking train can also be identified by low outlet flow from each CCW HX or decrease in the ESWS header pressure. The leaking ESWS trains are then isolated by shutting down the corresponding ESWS

o. Four trains of ESWS have physical separations and flooding in one train does not propagate to other trains

p. A water leak in the break room that adjoins the MCR would be isolated immediately by the operators in the MCR.

Flood areas are provided in the same way as fire areas because of the following characteristics of the US-APWR.

- Fire areas are divided in fire zones which are divided by walls. Boundaries of fire areas consist of fire walls which maintain integrity for three hours. The walls are also effective to mitigate the effects of sprays.

- Fire protection seals for penetrations or fire protection doors are effective to mitigate the impact of flood.

Large circulating water system leaks due to pipe failures are indicated in the control room by a loss of vacuum in the condenser shell and water level in the sump. Water from a system rupture will run out of the building through a relief panel in the T/B wall before the level can raise high enough to cause damage. Site grading will carry the water away from safety-related buildings.

The SSCs in the flood areas are identified from internal events PRA models. Equipment location is gathered from several sources: general arrangement drawings, US-APWR internal and fire PRA databases, and clarification discussions with design engineers. SSCs, such as manual valves, check valves, safety valves, orifices, and tanks have been excluded because those SSCs would not be affected by flooding.

Performing a flood hazard evaluation is a key to achieving a realistic, plant-specific internal flooding PRA model. At each level of the flood hazard evaluation different types of passive component pressure boundary failures are considered including the following categories of loss-of-fluid events:

- Sprays - Spray events result in no accumulation of water on a building floor. An underlying assumption is that a spill rate from a pressure boundary through-wall flaw is within the capacity of a floor drain system. The equipment in each flood zone is identified and the range of a potential spray zone and the effectiveness of spray shields considering local spray impacts determined. A detailed evaluation of potential spray impacts includes identification of the type of spray source. An engineering calculation of estimated spray range may be performed if required. The resulting leak or spill rate is defined as less than 100 gpm. The upper bound flow rate is based on engineering judgment and insights accumulated in the review of service data and licensing basis flood level calculations. This upper bound flow rate of 100 gpm also corresponds to be typical capacity of a floor drain system. Hence, if the consequences of a flood event are limited to spray impact, the submergence of equipment in the area need not be considered. A spray event should therefore be assumed to fall in the range of less than 100 gpm unless the results of a site-specific design basis evaluation indicate otherwise.

- Floods - Flood events are characterized as pressure boundary failures involving large through-wall flow rates and resulting in accumulation of water on a building floor. In the flood hazard evaluation the upper bound for a resulting spill rate is chosen in such a way that it remains within the plant-specific flood design basis as defined in NUREG-0800, Standard Review Plan (SRP) Subsection 3.4.1 (Reference 19.1-39). The spill rate resulting from this type of pressure boundary failure may or may not challenge the capacity of a floor drain system depending on the drain design. The resulting spill rate is defined as in excess of 100 gpm but no larger than 2000 gpm. This spill rate range is typically within the flood design basis in safety related structures.

- Major Floods - Major flood events are characterized as pressure boundary structural failures with a resulting spill rate beyond the flood design basis. A resulting spill rate is likely to exceed the capacity of a floor drain system. The result of a major structural failure is a rapid release of a large volume of water with a spill rate in excess of 2000 gpm.

- HELB - HELB is characterized by a large through wall flow rate caused by a major structural failure in a high-energy line. A piping system is defined as high-energy if the maximum operating temperature exceeds 200ºF or the maximum operating pressure exceeds 275 psig. By contrast, a piping system is defined as moderate energy if the maximum operating temperature is less than 200 ºF or the maximum operating pressure is less than 275 psig. Consequential effects of HELB as well as moderate-energy line break (MELB) events are considered in the internal flooding PRA. In this internal flooding PRA, consequential effects of HELB and MELB are bounded by the effects of floods and major floods assuming all components placed in flood propagation areas lose their function.

Flood frequencies have been calculated using Reference 19.1-40. This report provided the failure rates per reactor operating year - linear foot for each system. Therefore, flood frequencies in the flood areas are calculated considering the plant specific piping lengths of the systems which involved in the areas. Flood scenarios have been screened out qualitatively if there are no flood sources in the flood area or there are no SSCs in the area of flood propagation.

Plant CDF quantification of the US-APWR PRA used the RiskSpectrum® PRA code.

19.1.5.3.2 Results from the Internal Flooding Risk Evaluation

The internal flooding risk evaluation of US-APWR is performed using the design specific flood protection features on DCD Chapter 3 Appendix 3K, the flood areas from the DCD Chapter 9 Appendix 9A and the internal PRA model of DCD 19.1.4.

The total CDF due to the internal flooding is 8.9E-07/RY. The “spray” contribution is 3.3E-08/RY, the “flood” contribution is 2.6E-07/RY, and the “major flood” contribution is 5.9E-07/RY.

The total LRF due to the internal flooding is 1.6E-07/RY. The “spray” contribution is 3.5E-09/RY, the “flood” contribution is 4.2E-08/RY, and the “major flood” contribution is 1.1E-07/RY.

Dominant flooding scenarios are as follows:

<u>Dominant scenarios of CDF are following 23 scenarios that contribute 90% of CDF.</u>

- FA2-321-01 (Major flood at reactor building 2F west corridor) 1.6E-07/RY
- FA2-320-01 (Major flood at reactor building 2F east corridor) 1.5E-07/RY
- FA2-507-02 (Flood at reactor building 4F steam generator blowdown water radiation monitor room) 7.1E-08/RY

- FA2-321-01 (Flood at reactor building 2F west corridor) 5.7E-08/RY
- FA2-320-01 (Flood at reactor building 2F east corridor) 4.4E-08/RY
- FA2-102-01 (Major flood at reactor building B1F east A-EFW pump room) 3.2E-08/RY
- FA2-111-01 (Major flood at reactor building B1F east corridor) 3.0E-08/RY
- FA2-108-01 (Major flood at reactor building B1F west D-EFW pump room) 2.9E-08/RY
- FA2-420-01 (Flood at reactor building 3F east corridor) 2.3E-08/RY
- FA2-109-01 (Major flood at reactor building B1F west C-EFW pump room) 2.3E-08/RY
- FA2-108-01 (Flood at reactor building B1F west D-EFW pump room) 2.3E-08/RY
- FA2-112-01 (Major flood at reactor building B1F west corridor) 2.2E-08/RY
- FA3-114-01 (Major flood at power source building 1MF west cable tray space) 2.1E-08/RY
- FA2-102-01 (Flood at reactor building B1F east A-EFW pump room) 1.8E-08/RY
- FA2-507-01 (Major flood at reactor building 4F east corridor) 1.7E-08/RY
- FA2-103-01 (Major flood at reactor building B1F east B-EFW pump room) 1.5E-08/RY
- FA2-509-01 (Major flood at reactor building 4F west corridor) 1.4E-08/RY
- FA2-420-01 (Major flood at reactor building 3F east corridor) 1.3E-08/RY
- FA2-423-01 (Major flood at reactor building 3F west corridor) 1.2E-08/RY
- FA2-414-01 (Spray at reactor building 3F east main steam piping room) 9.8E-09/RY
- FA2-201-01 (Major flood at reactor building 1F east corridor) 9.8E-09/RY
- FA2-206-01 (Major flood at reactor building 1F west corridor) 9.6E-09/RY
- FA2-102-01 (Spray at reactor building B1F east A-EFW pump room) 8.0E-09/RY

<u>Dominant scenarios of LRF are following 24 scenarios that contribute 90% of LRF.</u>

- FA2-321-01 (Major flood at reactor building 2F west corridor) 3.9E-08/RY
- FA2-321-01 (Flood at reactor building 2F west corridor) 1.4E-08/RY

- FA2-320-01 (Major flood at reactor building 2F east corridor) 1.2E-08/RY
- FA2-507-02 (Flood at reactor building 4F steam generator blowdown water radiation monitor room) 7.5E-09/RY
- FA2-108-01 (Major flood at reactor building B1F west D-EFW pump room) 7.3E-09/RY
- FA2-507-01 (Major flood at reactor building 4F east corridor) 6.5E-09/RY
- FA2-109-01 (Major flood at reactor building B1F west C-EFW pump room) 5.7E-09/RY
- FA2-108-01 (Flood at reactor building B1F west D-EFW pump room) 5.6E-9/RY
- FA2-112-01 (Major flood at reactor building B1F west corridor) 5.4E-09/RY
- FA3-114-01 (Major flood at power source building 1MF west) 5.3E-09/RY
- FA2-320-01 (Flood at reactor building 2F east corridor) 3.7E-09/RY
- FA2-509-01 (Major flood at reactor building 4F west corridor) 3.6E-09/RY
- FA2-423-01 (Major flood at reactor building 3F west corridor) 3.2E-09/RY
- FA2-102-01 (Major flood at reactor building B1F east A-EFW pump room) 2.7E-09/RY
- FA2-501-02 (Major flood at reactor building A-emergency feedwater pit room) 2.5E-09/RY
- FA2-111-01 (Major flood at reactor building B1F east corridor) 2.5E-09/RY
- FA2-420-01 (Flood at reactor building 3F east corridor) 2.5E-09/RY
- FA2-206-01 (Major flood at reactor building 1F west corridor) 2.5E-09/RY
- FA2-102-01 (Flood at reactor building B1F east A-EFW pump room) 1.6E-09/RY
- FA2-420-01 (Major flood at reactor building 3F east corridor) 1.4E-09/RY
- FA2-512-01 (Major flood at reactor building B-emergency feedwater pit room) 1.3E-09/RY
- FA2-103-01 (Major flood at reactor building B1F east B-EFW pump room) 1.3E-09/RY
- FA2-419-01 (Major flood at reactor building 3F non-radioactive area westside corridor) 1.2E-09/RY
- FA2-201-01 (Major flood at reactor building 1F east corridor) 1.0E-09/RY

The key scenarios of internal floods for both CDF and LRF are as followings.

[FA2-321-01]

Major flood due to the rupture of piping in the west side corridor on the 2F of R/B causes partial loss of component cooling water systems. Simultaneous operator failure to open the valve of EFW pit discharge cross tie line and operator failure for feed and bleed operation result in core damage. This scenario is dominant contributor of CDF (1.6E-07/RY) and LRF (3.9E-08/RY).

[FA2-320-01]

Major flood due to the rupture of piping in the east side corridor on the 2F of R/B causes partial loss of component cooling water systems. Simultaneous operator failure to open the valve of EFW pit discharge cross tie line and operator failure for feed and bleed operation result in core damage. This scenario is dominant contributor of CDF (1.5E-07/RY) and LRF (1.2E-08/RY).

[FA2-507-02]

Flood due to the rupture of piping on the 4F of R/B steam generator blowdown water radiation monitor room causes loss of function of both A and B trains of component cooling water pumps, essential chillers, and batteries, by the effect of flood propagation. Also A and B EFW pumps fail. This scenario causes partial loss of component cooling water systems. Simultaneous operator failure to open the valve of EFW pit discharge cross tie line, random failure of one EFW pump and operator failure for feed and bleed operation result in core damage. This scenario is dominant contributor of CDF (7.1E-08/RY) and LRF (7.5E-09/RY).

[FA2-321-01]

Flood due to the rupture of piping in the west side corridor on the 2F of R/B causes partial loss of component cooling water systems. Simultaneous operator failure to open the valve of EFW pit discharge cross tie line and operator failure for feed and bleed operation result in core damage. This scenario is dominant contributor of CDF (5.7E-08/RY) and LRF (1.4E-08/RY).

[FA2-320-01]

Flood due to the rupture of piping in the east side corridor on the 2F of R/B causes partial loss of component cooling water systems. Simultaneous operator failure to open the valve of EFW pit discharge cross tie line and operator failure for feed and bleed operation result in core damage. This scenario is dominant contributor of CDF (4.4E-08/RY) and LRF (3.7E-09/RY).

[FA2-102-01]

Major flood due to the rupture of piping in the A-EFW pump (T/D) room on the B1F of R/B causes loss of function of both A and B trains of component cooling water pumps, essential chilled water pumps, and batteries by the effect of flooding propagation. Also A and B EFW pumps fail. This scenario causes partial loss of component cooling water

systems. Simultaneous operator failure to open the valve of EFW pit discharge cross tie line and operator failure for feed and bleed operation result in core damage. This scenario is dominant contributor of CDF (3.2E-08/RY) and LRF (2.7E-09/RY).

[FA2-111-01]

Major flood due to the rupture of piping in the east side corridor on the B1F of R/B causes partial loss of component cooling water systems. Simultaneous operator failure to open the valve of EFW pit discharge cross tie line and operator failure for feed and bleed operation result in core damage. This scenario is dominant contributor of CDF (3.0E-08/RY) and LRF (2.5E-09/RY).

[FA2-108-01]

Major flood due to the rupture of piping in the D-EFW pump (T/D) room on the B1F of R/B causes loss of function of both C and D trains of component cooling water pumps, essential chilled water pumps, and batteries by the effect of flooding propagation. Also C and D EFW pumps fail. This scenario causes partial loss of component cooling water systems. Simultaneous operator failure to open the valve of EFW pit discharge cross tie line and operator failure for feed and bleed operation result in core damage. This scenario is dominant contributor of CDF (2.9E-08/RY) and LRF (7.3E-09/RY).

[FA2-420-01]

Flood due to the rupture of piping in the east side corridor on the 3F of R/B causes partial loss of component cooling water systems. Simultaneous operator failure to open the valve of EFW pit discharge cross tie line and operator failure for feed and bleed operation result in core damage. This scenario is dominant contributor of CDF (2.3E-08/RY) and LRF (2.5E-09/RY).

[FA2-109-01]

Major flood due to the rupture of piping in the C-EFW pump (M/D) room on the B1F of R/B causes loss of function of both C and D trains of component cooling water pumps, essential chilled water pumps, and batteries by the effect of flooding propagation. Also C and D EFW pumps fail. This scenario causes partial loss of component cooling water systems. Simultaneous operator failure to open the valve of EFW pit discharge cross tie line and operator failure for feed and bleed operation result in core damage. This scenario is dominant contributor of CDF (2.3E-08/RY) and LRF (5.7E-09/RY).

Risk significant scenarios involve major flooding due to the ruptures of piping at R/B west side or east side non restricted areas. R/B contains safety related components. Major flood causes partial (east side or west side) failures of many components, such as CCW pumps and EFW pumps, due to submerge rapidly. Dominant cutsets are shown in Table 19.1-70. Fussell-Vesely importance and risk achievement worth are shown in Table 19.1-71 and Table 19.1-72 respectively. Importance of common cause failures, human errors and hardware failure are shown in Tables 19.1-73 through 19.1-78. Significant SSCs are EFWS, feed and bleed operation using high head injection system and SDVs. Key events are partial loss of CCWS. CCW pumps are located in B1F and are affected by major

floods. Key SSCs for internal flood are CCWS and mitigation systems for the partial loss of CCWS such as EFWS and feed and bleed operations.

Separation of the electrical rooms on the first floor and the second floor of the T/B and separation between the T/B and the two electrical rooms are provided so that the electrical rooms will not be affected by a single flood or fire. This design feature reduces the risk from loss of offsite power caused by flooding in the T/B. To assess the risk benefit of this design feature, a sensitivity analysis assuming that a flood in the T/B will result in loss of offsite power was performed. If the electrical room of the T/B is not separated into different flooding zones, flooding in the T/B followed by failure of all Class 1E gas turbine generators will result in a station blackout. The CDF and LRF of this scenario are 3.0E-08/RY and 2.7E-09/RY, respectively. The total CDF from other flood scenarios is approximately the same as that for the base case flooding scenario (CDF of 8.9E-7/RY); however, if the loss of offsite power scenario is included, the total flooding CDF and LRF will increase to 9.2E-07/RY and 1.6E-07/RY, respectively. This result shows that this design feature is effective in reducing flooding risk.

US-APWR sets several water tight doors to prevent the propagation of floods. As a bounding sensitivity study, assumed all water barrier doors except the controlled barriers such as R/B separations between east side and west side and high energy compartments are invalid. The CDF and LRF of this bounding study are 2.7E-06/RY and 8.9E-07/RY, respectively. Although the several local watertight doors opened, the increasing of risk is not significant.

The pipe rupture frequencies for internal flooding PRA used for the base case are based on EPRI-TR-1013141 Revision1 Table 6-1. As a sensitivity analysis, case 7a in the Table 4-27 of the EPRI report and corresponding inspection effectiveness factor are assumed in evaluating the pipe rupture frequencies except the piping of fire protection water supply system and sampling system. The total internal flooding CDF and LRF are 5.6E-07/RY and 1.0E-07/RY, respectively. This result shows that a development of an adequate inspection program would be effective in reducing flood risk.

A flooding propagation to the MCR is not considered in the base case. A sensitivity study was performed to identify the effectiveness of mitigation actions in the MCR and the RSC in the case of flood propagation to the MCR. The CDF and LRF resulting from this sensitivity study scenario are 2.9E-13/RY and 1.6E-14/RY, respectively. This result shows that an adequate operator action in the MCR and RSC is effective in reducing the internal flooding risk even though the MCR is not protected from flooding.

A significant contributor for flooding risk is the failure of switching over from the EFW pit to the intact emergency feed water trains. This is because each EFW pit has a water source of 50% to perform cold shutdown. This sensitivity study is selected to determine the sensitivity of the estimated risk if such an action is not required. If each EFW pit has water source of 100%, the switching over of the EFW pit is not needed in the case of severe flooding events. The total CDF and LRF resulting from this sensitivity study are reduced to 1.4E-07/RY and 4.4E-08/RY, respectively. This result shows that this operator action is sensitive for internal flooding and a development of an adequate plant-specific procedure would be effective in reducing flood risk.

Assessment of uncertainties of the internal flood PRA model accounts for uncertainty in initiating events. Table A-13 through Table A-52 of EPRI 1013141 [Reference 19.1-40] addresses uncertainties in pipe failure rates. Flooding isolation is not credited in the flooding assessment except for a flood in the break room adjacent to the MCR. Accordingly, the flooding assessment bounds uncertainties due to flooding isolation, spill rate distributions, and the time to reach a critical flood volume. Uncertainty is calculated using a Monte Carlo process.

The plant CDF uncertainty range is found to be 2.4E-06/RY to 1.4E-07/RY for the 95% to 5% interval. This uncertainty calculation is considered 95% contribute scenarios of CDF.

- 95th percentile 2.4E-06/RY
- Mean 8.4E-07/RY
- Median 5.0E-07/RY
- 5th percentile 1.4E-07/RY

The plant LRF uncertainty range is found to be 3.8E-07/RY to 3.3E-08/RY for the 95% to 5% interval. This uncertainty calculation is considered about 90% contribute scenarios of LRF.

- 95th percentile 3.8E-07/RY
- Mean 1.5E-07/RY
- Median 9.7E-08/RY
- 5th percentile 3.3E-08/RY

The most significant areas to internal flood risk are the second floor corridors (FA2-321-01 and FA2-320-01) of reactor building where EFW piping is located. The flooded water is assumed to propagate to other lower areas on the R/B east or west side and causes failures of both safety-related systems in either side.

The steam generator blowdown water radiation monitor room (FA2-507-02) on the fourth floor, the turbine driven (T/D) emergency feedwater pump rooms (FA2-102-01 and FA2-108-01) on the B1 floor and corridors of the third floor and B1 floor in the reactor building are also risk significant areas. The internal flooding frequencies of these rooms are higher than other rooms because of the many water sources in the piping rooms and cause failures of both safety-related systems in either side.

The most significant system to internal flood risk is the emergency feedwater (EFW) system. The risk-significant cutsets of internal flooding are human errors to switchover water sources of EFW pumps. This is because the risk-significant flood scenarios might possibly affect the SSCs on either side of the R/B, and the failure of two EFW pumps of the affected side is assumed. In this scenario, switchover of the EFW pit or the realignment of water sources of EFW pumps to the intact side of the EFW lines is

required. When detailed plant-specific information is available, it can be determined that there is sufficient time to perform these actions.

Significant systems to internal flooding frequencies are the following four systems, the emergency feedwater system (EFWS), main feedwater system (MFWS), main steam system (MSS) and circulating water system (CWS). These systems contain longer runs of piping in the R/B. For EFWS and MFWS, flood frequencies per piping lengths from EPRI 1013141 (Reference 19.1-40) are relatively higher (on the order of 1E-6/yr-ft) than other systems. For CWS and MSS, the numbers of pipes and lengths of piping are relatively higher than for other systems in the R/B, though the flood frequency (on the order of 1E-7/yr-ft) is lower than that for the EFWS and MFWS.

Except for the flood source in the break room adjoining the main control room, the isolation of flood sources by operators is not considered in this assessment. All floors in the R/B are divided into two areas, east and west, by concrete walls and/or water-tight doors. This design mitigates the impact of flooding from one area to safety-related systems in other areas, impacting no more than two of the four trains.

Except for the flood source in the break room adjoining the main control room, flood source isolation actions by operators is not expected in this assessment. The most significant operator action for internal flooding is switch-over of the EFW pit or the realignment of the EFW source to the intact side of the EFW lines. This case occurs when major flooding due to failure of two trains of the EFW system propagates into the R/B east side or west side.

The major contributors to the uncertainty associated with risk estimates are that available specific information--such as pipe routing, pipe lengths, and flooding isolation actions--are limited at the design certification (DC) phase. The risk assessment of US-APWR internal flooding is performed under some conservative assumptions as a bounding analysis. It is expected that the internal flooding risk will be reduced with the plant-specific detailed information.

Based on these risk insights, safety-related equipment is separated as following, so that the risk due to internal flooding is significantly reduced.

- East side and west side of reactor building are physically separated by flood propagation preventive equipment and the connections are kept closed and locked.
- Areas between the reactor building and the turbine building are physically separated by flood prevention equipment.

The release categories are defined as the end state of the containment event tree (CET). The release categories for internal flood events at power are defined as the same with the ones for internal events at power. These release categories are described below.

- RC1: Containment bypass
- RC2: Containment isolation failure
- RC3: Containment overpressure failure before core damage

- RC4: Early containment failure
- RC5: Late containment failure
- RC6: Intact containment

The approach for quantification of the release categories for internal flood events is basically the same with the one for internal events at power, i.e. the frequency of each release category is calculated from CET. Although most accident sequences are quantified in this manner, the conditional containment failure probabilities (CCFP) of some accident sequences are assumed to be 1.0 without performing CET calculations, and the frequency of each release category for these sequences is not estimated. For internal flood events quantification, these sequences correspond to ones whose CDF is less than 1.0E-09/RY. It is therefore assumed that the frequency of these accident sequences are prorated to the release categories quantified in CET calculations except for RC6.

The frequency of each release category for internal fire events is evaluated as shown in Table 19.1-177.

Source terms for internal flood events at power are evaluated by employing MAAP 4.0.6 code. The large release frequencies (LRF) for internal flood events are evaluated relatively large and their contributions to the risks are not negligible. It is therefore considered beneficial to carefully analyze the source terms for internal flood events. The analytical model and conditions for the source term analyses are same with the ones for the severe accident progression analyses for internal events at power. The most dominant sequence in terms of the occurrence frequency and the source term is selected as the representative sequence for each release category. The same initiating event, partial loss of component cooling water (CCW), is selected as a representative sequence for all the release categories. In MAAP analysis, the reactor is assumed to trip manually at the same time as the accident, and the partial loss of CCW is modeled by starting only two out of four safety injection pumps and CS/RHR pumps.

- RC1: Partial loss of CCW + TI-SGTR one hour after core damage + SIS and CSS available + Firewater injection to reactor cavity 10 minutes after core damage
- RC2: Partial loss of CCW + SIS and CSS available + purge line isolation failure + Firewater injection to reactor cavity 10 minutes after core damage
- RC3: Partial loss of CCW + SIS and CSS available although Hx unavailable (SIS and CSS are forced stop immediately after containment failure) + RCS depressurization 10 minutes after core damage
- RC4: Partial loss of CCW + SIS and CSS available + Firewater injection to reactor cavity 10 minutes after core damage + Containment failure immediately after RV failure due to an energetic phenomenon
- RC5: Partial loss of CCW + SIS and CSS unavailable + RCS depressurization 10 minutes after core damage + Firewater injection to reactor cavity 10 minutes after core damage

- RC6: SBLOCA + SIS and CSS available + RCS depressurization 10 minutes after core damage + Firewater injection to reactor cavity 10 minutes after core damage + Containment design leak

The analysis result for each release category is summarized in Table 19.1-178.

19.1.6 Safety Insights from the PRA for Other Modes of Operation

A description of the LPSD state including the results of the analysis is provided in the following subsections.

19.1.6.1 Description of the Low-Power and Shutdown Operations PRA

LPSD operating states may involve one or more of the following three outage types.

- Type A: Shutdown for maintenance and restart without reducing RCS inventory and refueling. RCS is closed and coolant inventory in the pressurizer is retained. Although a single SG may be unavailable either for the forced outage or for the planned maintenance outage, the other SGs are available for heat removal.

- Type B: Shutdown for maintenance with below normal RCS inventory and restart without refueling. In contrast to type A, the RCS inventory is reduced and/or the RCS boundary is opened. During the period when the RCS is open, SGs are not used for heat removal. Alternate heat removal function would be provided and planned.

- Type C: Refueling shutdown, which includes both type A and B conditions. In contrast to type A and B, there may be times a large amount of additional water over the fuel during refueling, and the fuel may be unloaded from the RV to the SFP during the major maintenance activities. Reduced inventory condition states (mid-loop) may exist for periods before or after refueling.

- Low power: There may be periods when the plant operates at power levels below full power either due to failed or degraded equipment, equipment under repair, or other demands for lower than full power operation. These states may involve many configurations and are usually bounded by the full power case. They are not explicitly analyzed herein at this stage.

The outage types are clarified for modeling the complex configuration at LPSD and summarized as below.

Outage type	Plant shutdown	Early reduced inventory state	Refuel activity	Late reduced inventory state	Plant startup
A	×	N/A	N/A	N/A	×
B	×	×	N/A	N/A	×
C	×	×	×	×	×

The LPSD PRA has estimated that an outage type C "Refueling shutdown" is a representative outage type.

The LPSD operation modes are characterized in 13 plant operation states (POS). These POSs are identified considering plant configuration, potential of initiating events, and plant responses.

Several of these POSs were excluded from modeling based on the reasons given in Table 19.1-81. Table 19.1-82 provides the assumed duration of the various POSs, and this duration takes into account the US operational PWR plant data extracted from EPRI TR 1003465 (Reference 19.1-53). Table 19.1-83 is a planned maintenance schedule created supposing the actual outage. Table 19.1-141 summarizes conditions considered in this LPSD PRA, and includes the configuration of the RCS, effectiveness of SG reflux cooling and gravity injection, time to RCS boiling and core uncovery, decay heat, key activities, etc., for each POS during mid-loop operation. Figure 19.1-23 shows the timeframe assumed in the LPSD PRA including RCS water level and key activities during mid-loop operation.

One of the characteristic designs of the US-APWR is installation and removal of the in-core instrumentation system (ICIS) from the top of the RV head. Operators can start to remove (before refueling) and install (after refueling) the ICIS after the end of RCS draining as shown in Figure 19.1-23. This action cannot be done during RCS draining, which results in an extended duration of mid-loop operation. During actual plant operation, the action to install or remove the ICIS is performed when the RCS water level is above the top of main coolant piping (MCP). In addition, high SG installation level of the US-APWR design enables to keep water level higher than the top of MCP during installation or removal of SG nozzle dams and SG maintenance. The LPSD PRA conservatively assumes that the actions are done with water level at the center of MCP. This assumption is used in the estimation of allowable time to core uncovery after a loss of RHR.

The following is the POS definition considered in the LPSD PRA. In addition, the key activities during the mid-loop operation to be expected as main contributors to CDF for LPSD are also described in the following:

- POS 1: Low power operation – Out of scope of US-APWR LPSD PRA

  POS 1 is a low power operation state. Normal plant shutdown is gradually decreasing a reactor power. The control mode of control rods is switched from automatic operation mode to manual operation mode. The turbine bypass control is also switched from T_{avg} control mode to steam pressure control mode, and the main feed water control is switched to the bypass control mode. When the turbine output decreases to 5% lower, the turbine is tripped and the control rods are inserted in the reactor fully. The end of POS 1 is defined as the time at which a control rod insertion into the core to shift to a hot standby state.

- POS 2: SG cooling without the RHR cooling – Out of scope of US-APWR LPSD PRA

  POS 2 is a hot standby state transitioning to hot shutdown with core cooling by use of the SGs. Using the turbine bypass valves (and/or the main steam release valve), the RCS is cooled down and de-pressurized from hot standby to hot shutdown. If the RCS is below a pressure of 400 psig and a temperature of 350ºF, The RHRS can be used as the RCS cooling system. Therefore, the end of POS 2 is defined as the time of RCS temperature reaching 350ºF.

- POS 3: RHR cooling (RCS is filled with coolant)

  POS 3 is a hot shutdown and a cold shutdown state with cooling provided by the RHRS. When the RCS is below a pressure of 400 psig and a temperature of 350ºF, the RHRS starts and cools the RCS. The end of POS 3 is defined as the timing of initiation of a draindown of the RCS because the change of RCS inventories level is the important factor for LPSD PRA.

- POS 4: RHR cooling (mid-loop operation)

  POS 4 is a mid-loop operation state with cooling by the RHRS before refueling. The POS begins at the initiation of the RCS drain to the water level below the top of MCP by CVCS, and then SG drain is performed. CS/RHR pump failure is considered due to the pump cavitations caused by decreasing the RCS inventory. After that, the RCS inventory is increased up to the water level above the top of MCP and maintained by CVCS. High SG installation level of US-APWR enables removal of SG manways and installation of SG nozzle dams at the higher water level. In addition, operators perform detensioning of the RV head stud bolts and removal of either at least three pressurizer safety valves or pressurizer manway and of ICIS from the top of RV head. At the late stage of this POS, RV head is removed when RCS inventory is one-foot below the flange level.At the end of POS4, the reactor cavity is filled with water for refueling.

  POS 4 or a mid-loop operation is further divided according to the plant states. The subdivided POSs are shown in Table 19.1-141 and Figure 19.1-13 to Figure 19.1-15.

  - POS 4-1: This POS begins at the initiation of the drain down process from the RCS full level to the water level below the MCP top. The end of POS 4-1 is the time at which the SG manways are removed. Decrease of the RCS inventory and maintaining water level are controlled by the CVCS. In POS 4-1, the reflux cooling by the SGs is available as a heat sink under the vented condition, but the gravity injection is unavailable because the RCS is not at atmospheric pressure.

    Key Activities of POS 4-1:

    - Pressurizer spray vent valve is opened for RCS draining, and then the RCS is drained below the top of MCP by the CVCS for SG draining.

- The inventory of RCS is kept higher than the MCP top level by the CVCS after SG draining. Then, operations that loosen the RV head stud bolts for removal of the RV head and remove the ICIS from the top of RV head are started.

- SG manways on hot leg side and then on cold leg side are removed (End of POS 4-1).

• POS 4-2: This POS begins at the end of POS 4-1 and continues until the time that the SG nozzle dams are installed. In POS 4-2, the RCS inventory is kept at the water level higher than the MCP top by the CVCS. Since the RCS is open, the reflux cooling by the SGs is unavailable as a heat sink, but the gravity injection is available because the RCS is at atmospheric pressure.

  Key Activities of POS 4-2:

  - The CVCS keeps the RCS inventory at the MCP top level, continuing to POS 4-1.

  - Either at least three pressurizer safety valves or pressurizer manway is removed as RCS vent, and operations for the removal of RV head stud bolts and ICIS are continuing during this POS.

  - SG nozzle dams on cold leg side and then on hot leg side are installed (End of POS 4-2).

• POS 4-3: This period begins at the end of POS 4-2 and continues until the time at which the refueling cavity is filled with water. The RCS inventory is controlled by the CVCS and increased by the RWR and CS/RHR pumps. An RCS vent path is in service at the beginning of the POS and the RV head is removed during the POS. In the case of POS 4-3, since the RCS is isolated from the SGs, neither gravity injection nor decay heat removal via the SGs is available.

  Key Activities of POS 4-3:

  - The CVCS keeps the RCS inventory above the MCP top level, continuing to POS 4-2. The operation for the removal of RV head stud bolts has been finished.

  - The RCS inventory increases to one-foot below the flange level by the RWP pump in order to remove the RV head.

  - The operation for the removal of ICIS has been finished, and then the operation for the removal of RV head is started.

  - The operation for the hoist of the RV head is started.

  - The RV head is transferred for the execution of fuel offload, and the RCS inventory is increased up to cavity full by the CS/RHR pump (End of POS 4-3).

- POS 5: Refueling cavity is filled with water (refueling) – Out of scope of US-APWR LPSD PRA

  POS 5 is period when the refueling cavity is filled with water. To offload fuel from the reactor, the refueling cavity is filled with water. If a loss of decay heat removal were to occur, there is considerable time before the reactor core is exposed due to the boil down of coolant. Therefore, the state in which the refueling cavity is filled with water is identified as one of the states of the plant. The end of POS 5 is defined as the time at which the reactor core is empty.

- POS 6: No fuel in the core or the fuel is partially offloaded – Out of scope of US-APWR LPSD PRA

  POS 6 is the state at which there may be either no fuel in the reactor core or the fuel is partially offloaded. For refueling and examination of fuel, fuel is transported from the RV to the SFP, or temporarily stored in the containment racks during this POS. This state is excluded from the analysis because there is either no fuel in the reactor, or if the fuel is partially offloaded, there is considerable time before the reactor core is exposed given a loss of decay heat removal event. The end of POS 6 is defined as the time at which fuel is loading into the reactor core.

- POS 7: Refueling cavity is filled with water (refueling) – Out of scope of US-APWR LPSD PRA

  POS 7 is the state at which the refueling cavity is filled with water. To load new fuel in the reactor, the refueling cavity is filled with water which defines this POS. If a loss of decay heat removal were to occur, there would be considerable time before the reactor core is exposed by the boiling of coolant. Therefore, the state in which the refueling cavity is filled with water is one of the states of the plant. The end of POS 7 is defined as the time at which the RCS is drained. The change of RCS inventory level is an important factor for LPSD PRA.

- POS 8: RHR cooling (mid-loop operation after refueling)

  POS 8 is a mid-loop state with cooling by the RHRS after refueling. The POS begins at the initiation of the RCS drain from the cavity full to the water level above the top of MCP by CS/RHR pump and CVCS. The RV head is placed and installed when the water level is one-foot below the flange level. After that, operators perform tensioning of the RV head stud bolts, installation of ICIS from the top of RV head and closure of the RCS vent path provided in the POS 4-2. In addition, high SG installation level of US-APWR enables installation of SG manways and removal of SG nozzle dams at the higher water level. At the late stage of the POS, the RCS inventory is decreased down to the water level below the top of MCP to perform vacuum venting. The RCS inventory is supplied up to the full level for start-up at the end of POS 8.

  POS 8 or a mid-loop operation is further divided according to a plant states. The subdivided POSs are shown in Table 19.1-141 and Figure 19.1-13 to Figure 19.1-15.

- POS 8-1: This POS begins at the initiation of the drain down process from the cavity full level to the water level above the MCP top. The end of POS 8-1 is the time at which the SG nozzle dams are removed. The RCS is drained down to one-foot below flange level by CS/RHR pumps, then RV head is placed. After that, RCS is controlled by CVCS. In the case of POS 8-1, since the RCS is isolated from the SGs, neither gravity injection nor decay heat removal via the SGs is available.

  Key Activities of POS 8-1:

  - The RV head is transferred to the original position, and then the RCS inventory is draining to one foot below the flange level by the CS/RHR pumps.
  - The RV head is placed on the original position, and then the water around the cavity is drained by the RWR pumps.
  - The RCS inventory is drained and kept higher than the MCP top level by the CVCS.
  - Operations for the installation of ICIS and tightening of the RV head stud bolts are started after RCS draining. Then SG nozzle dams on the hot leg side and then the cold leg side are removed (End of POS 8-1).

- POS 8-2: This POS begins at the end of POS 8-1 and continues until the time that the SG mayways are installed. In POS 8-2, the RCS inventory is kept at the water level higher than the MCP top by the CVCS. Since the RCS is open, the reflux cooling by SGs is unavailable as a heat sink, but gravity injection is available because the RCS is at atmospheric pressure.

  Key Activities of POS 8-2:

  - The CVCS keeps the RCS inventory higher than the MCP top level, as in POS 8-1. The RCS vent path provided in the POS 4-2 is closed, and operations for the installation of ICIS and the tightening of RV head stud bolts are continuing during this POS.
  - SG manways on cold leg side and then hot leg side are installed (End of POS 8-2).

- POS 8-3: This period begins at the end of POS 8-2 and continues until the time at which the RCS inventory is increased up to RCS full level. The RCS inventory is controlled by the CVCS. At the end of POS 8-3, vacuum venting to remove air in the RCS is performed for plant start-up when the RCS inventory is decreased down to the water level lower than the top of MCP. In POS 8-3, since the RCS is closed, reflux cooling by the SGs is available as a heat sink.

  Key Activities of POS 8-3:

- The CVCS keeps the RCS inventory at the MCP top level, continuing to POS 8-2. The operation of vacuum venting is executed to remove the air in RCS.
- The RCS inventory increases by CVCS for the startup to the normal level which is higher than the top of MCP.

- POS 9: Cold shutdown with RHR cooling (RCS is filled with water)

  POS 9 is cold shutdown state with cooling by the RHRS. Before performing the leakage tests of the RCS, the RCS is filled with water.

- POS 10: RCS leakage test (RHRS isolated from RCS) – Out of scope of US-APWR LPSD PRA

  POS 10 is the RCS leakage test state. Before the plant start-up, the leakage test of the RCS is performed. Since the RCS pressure becomes high during the RCS leakage test, the RHRS is isolated from the RCS. After the leakage test, the RCS is returned to use of RHR cooling. The end of POS 10 is defined at the time of the end of the RCS leakage test and initiation of cooling by the RHRS.

- POS 11: RHR cooling (RCS is filled with water, after leakage test.)

  POS 11 is a cold shutdown and a hot shutdown state with cooling by the RHRS. After returning to RHR cooling, the temperature and pressure are increased before start-up of the plant. The RHRS is operated under the condition that the RCS temperature is less than 350º F. The end of POS 11 is defined as the time at which the RCS temperature approaches 350°F and isolation the RHRS has occurred.

- POS 12: Hot standby condition after RHR isolation – Out of scope of US-APWR LPSD PRA

  POS 12 is a hot standby state. When the RCS temperature approaches 350º F, the RHRS is isolated. The RCS temperature and pressure are raised to a hot standby state while using the release valves of the main steam system. The end of POS 12 is defined as the time at which the reactor enters a critical state (at power).

- POS 13: Low power operation – Out of scope of US-APWR LPSD PRA

  POS 13 is a low power operation. This is grouped as one of the plant states from hot shutdown to start-up. If a LOCA were to occur, the ECCS starts automatically and the integrity of fuels would be assured.

Detailed accident sequence quantification is performed for only POS 4-3 and POS 8-1 because both POSs are anticipated to be dominant contributors to the total CDF during LPSD operation, considering longer durations (36 hours and 60 hours), more types of initiating events (possibility of loss of RHR due to over-drain or the failure of maintain water level) and fewer available mitigation systems (decay heat removal via SGs and gravity injection are not available) compared to other POSs.

During shutdown, control rods are inserted in the core, and decay heat is removed by heat removal systems or other backup system. The causes of fuel damage or release activities are loss of decay heat removable from RCS, loss of RCS inventory, loss of supporting systems such as electric power systems, and component cooling systems, reactivity insertion, and loss of SFP cooling. The likelihood of initiating events (IE) is dependent on plant configuration and the maintenance procedures. In order to select and grouping the IEs at LPSD, FMEA are performed.

IEs and POSs with a possibility that IEs occur are listed below;

Initiating Event	POS							
	3	4-1	4-2	4-3	8-1	8-2	9	11
LOCA	x	x	x	x	x	x	x	x
Loss of RHR due to over-drain	NA	x	NA	NA	x	NA	NA	NA
Loss of RHR caused by failing to maintain water level	NA	NA	x	x	NA	x	x	NA
Loss of RHR caused by other failures	x	x	x	x	x	x	x	x
Loss of CCW/ essential service water	x	x	x	x	x	x	x	x
Loss of offsite power	x	x	x	x	x	x	x	x
×: Initiating event is considered in this POS NA: Not applicable								

- LOCA: all POSs
- Loss of RHR due to over-drain: POS 4-1 and 8-1 (During transition to the RCS full to mid-loop)
- Loss of RHR caused by failing to maintain water level: POS 4-2, 4-3, 8-2, and 8-3. (During mid-loop operation)
- Loss of RHR caused by other failures: all POSs
- Loss of CCW/ essential service water: all POSs
- Loss of offsite power : all POSs

In POSs 5, 6, and 7 when the refueling cavity is flooded, if an inadvertent refueling cavity drain down event were to occur, operators could detect the event using instrumentation such as the refueling cavity level instrument and associated alarm. There is considerable time to isolate the drain down path. The core damage frequency during these POSs is very low. Further, containment penetrations, e.g., equipment and personnel hatches, are controlled such that they are either closed or are capable of being closed. Thus, the risk of a large early release from containment is determined to be negligible.

Also there may be other two initiating events. One is the reactivity insertion and another is the loss of SFP cooling.

The reactivity insertion event due to boron dilution has been judged to be insignificant to risk because of the following factors:

- Strict administrative controls are in place to prevent boron dilution. When carrying out a boron dilution, the operator performs two operations: (1) changing from the automatic makeup mode to the dilution mode and (2) operating the start switch. Dilution cannot start unless both of these steps are performed. The requirement for two distinct actions reduces the likelihood of inadvertent dilution caused by operator action. For the US-APWR, planned boron dilutions are under strict administrative controls.

- The CVCS design inherently limits the maximum boron dilution rate so boron dilution transients proceed relatively slowly. The consequences of re-criticality are minor unless they continue for very long period of time. Boron dilution events are highly recoverable.

Loss of SFP cooling is also progress the phenomena and has sufficient time to recovery because of large coolant inventory in the pit. Furthermore, both events have not been risk significant in previous PRA studies. Therefore, both events are excluded as an initiating event for LPSD PRA.

Indications of temperature and water level are provided to detect unfavorable events that occur during shutdown. Indications are listed below.

- Indications of temperature

Two types of instruments are provided in US-APWR design to measure the temperature representative of the core exit whenever the reactor vessel head is located on top of the reactor vessel. The first one is core exit thermocouples located inside the RV. The second is resistance temperature detectors in the reactor coolant hot leg. These two independent instruments will be available whenever the RCS is in a mid-loop condition and the reactor vessel head is located on top of the reactor vessel. This will be assured by implementation of the maintenance rule and associated administrative procedures.

- Indications of water

Three types of permanent instruments are provided in US-APWR design to measure RCS water level for shutdown. The first one is narrow range water level instrument, the second one is mid range water level and the third one is wide range water level. Narrow range and mid range water level instruments, which measure differential pressure between the bottom of the cross over leg and the pressurizer vapor space are provided to measure RCS water level during midloop operation. Therefore, the narrow range and mid range water level instruments provide correct indication of water level under vacuum conditions in the RCS.

In addition to the narrow range and middle range mid-loop water level sensors, a temporary water level sensor that refer pressure at the bottom of cross over leg and reactor vessel top vent is provided when the reactor coolant system (RCS) is vented at a high elevation. This sensor will satisfy the following specifications.

- Water level can be read outside the containment in order to be effective during events which involve harsh environment in the containment

- Tygon tubing monometer will not be used
- Instrumentation piping diameter will be sufficient enough to prevent delay in response

Freeze plug may not be used for US-APWR because the isolation valves are installed considering maintenance and CCWS has been separated individual trains. Therefore, the freeze plug failure is excluded from the potential initiator.

The methods for data analysis and common cause analysis are the same as for Level 1 internal events PRA at power. The details of data analysis and CCF analysis are given in Subsection 19.1.4.1.1.

Mitigating functions during LPSD can be categorized into two groups: decay heat removal function and RCS inventory make up function. Systems that provide these functions are listed below. It is postulated that if these systems fail following an initiating event, bulk boiling and core damage will occur.

- Decay heat removal functions
  - RHR system

    If CS/RHR pumps are available, the RCS is cooled by the RHR system through RHR suction line.

  - SG and secondary side system

    When the RHR cooling is unavailable, decay heat is removed from the RCS via the SGs.

- RCS inventory make-up Functions
  - CVCS

    If the RHRS and the heat removal via SGs are unavailable, coolant to the RCS is injected by the CVCS in order to prevent bulk boiling and to maintain the RCS inventory. If the operable charging pumps fail, pumps that were locked out for low temperature overpressure (LTOP) compliance can be used if available.

  - High head injection system

    If the CVCS fails to operate, safety injection pumps are utilized to inject coolant to the RCS in order to maintain coolant inventory. If the operable safety injection pumps fail, pumps that were locked out for low temperature overpressure (LTOP) compliance can be used if available.

  - Gravity injection system

    If the other mitigation functions fail, the gravity injection line is manually established and coolant is drained into the RCS by gravity from the SFP which

is located on a higher elevation than the RCS. This function is only available when the RCS pressure is at atmospheric pressure.

The following describes the event trees for the analyzed LPSD IEs.

Loss of coolant accident (LOCA)

During shutdown, the RCS is low or atmospheric pressure. LOCA caused by RCS pipe rupture are unlikely to occur. This initiating event is considered to be caused by loss of cooling water (other than those due to total loss of offsite power), loss of flow and heat exchanger fouling. This event is defined as a loss of all RHR trains.

The frequency of LOCA is evaluated as follow:

- Frequency of plant shutdown for the typical analysis case is 1 shutdown / 2 years = 0.5 events per year assuming a refueling shutdown scheduled every 24 months.
- The frequency of a LOCA is estimated as 5.4E-06/hr, which is referred from Reference 19.1-48.
- Based on a POS 4-3 and POS 8-1 duration of 36 and 60 hours (Table 19.1-82), the probability of a LOCA during both POSs are:

  POS 4-3: [5.4E-06 x 36] = 1.9E-04

  POS 8-1: [5.4E-06 x 60] = 3.2E-04

Therefore, the frequencies of LOCA during both POSs are estimated as follows:

POS 4-3: [0.5 x 1.9E-04] = 9.7E-05/Y

POS 8-1: [0.5 x 3.2E-04] = 1.6E-04/Y

The event tree (ET) for the LOCA is shown in Figure 19.1-16. Each top event of this ET is described as follows:

- LOA: Isolation of CS/RHR hot leg suction valves

  Following a LOCA, isolation of CS/RHR pump hot leg suction by motor-operated valves is expected. Two normally closed motor-operated valves are aligned in series in each of four RHR train suction lines between the RCS and the CS/RHR pump. The failure of this event tree heading is a failure of isolation by manual operation at the MCR.

- MC: RCS makeup by charging pump

  This mitigation measure represents the RCS inventory makeup by using the charging pump. When a loss of RCS inventory event occurs, RCS water level is expected to be recovered by charging injection pump. Water source of the pump is volume control tank (VCT) during normal operation. The water source is automatically changed to refueling water storage auxiliary tank (RWSAT) upon

detection of low-low signal of VCT water level. If further loss of RCS inventory can be prevented, water volume in the RWSAT is enough to raise the level to enable operation of the standby CS/RHR pumps. Thus, this top event does not require RWSAT water makeup. The borated water in the RWSAT is injected into the RCS by the charging pump. It is assumed that loss of this function occurs through failure of the required manual operation.

- RH: Decay heat removal from the RCS by RHR system on standby

  Following a loss of operating RHR system, decay heat removal by standby RHR system is possible. The failure of this event tree heading is a result of failure of the standby CS/RHR pumps to start or to run during its mission time.

- SG: Decay heat removed from the RCS via SGs

  If heat removal by RHR system fails, decay heat removal is performed using secondary system cooling via the SGs. Failure to manually operate motor-driven EFW pump, open main steam depressurization valve or close RCS vent path cause a loss of the function. The system is unavailable when the RCS vent path is in service.

- CV: Injection by the CVCS

  If decay heat removal using the RHRS and the SGs fails, in order to avoid loss of coolant and prevent the boiling of coolant, the boric water in the RWSAT is injected into the RCS using the charging pump. Before the accident, the water source of the pump is VCT during normal operation. The water source is automatically changed to RWSAT upon detection of low-low signal of VCT water level. At this timing, with the VCT low-low signal, the operator begins to prepare RWSAT water makeup. The operators will close the containment isolation valve and open manual valves to establish the flow path from RWSP to RWSAT. As soon as the RWSAT low level signal is actuated, the operators start the RWR pumps to make up the RWSAT. Make-up to the RWSAT is required as the RWSAT does not have sufficient capacity for the injection over the required mission time. It is assumed that loss of this function occurs by failure to inject to the RCS using the make-up pumps, or failure to provide make-up to the RWSAT.

- SI: High head Injection

  If RCS injection using the CVCS fails, the borated water in the RWSP is injected into the RCS using the SI pumps to maintain the RCS inventory. Failure to manually start SI pump or to run during mission time causes a loss of the function. The SI pumps have to be started manually because the ECCS actuation signal is blocked during shutdown.

- GI: Gravity injection

  Gravity injection from the SFP to the RCS is an effective system if the other mitigation systems fail and the RCS is at atmospheric pressure. In order to initiate gravity injection, it is necessary to open valves in the injection line and to supply

RWSP water to SFP using the RWR pumps. Gravity injection is available while the SG manways are removed and SG nozzle dams are not installed.

Loss of RHR due to over-drain (OVDR)

This category is loss of RHR operation during mid-loop operation caused by loss of coolant inventory. Two sub-categories are considered. One is OVDR and another is failure to maintain water level (FLML).

OVDR is caused by failure to automatically and manually stop RCS drain process and occurs at the beginning of mid-loop operation (i.e., POSs 4-1 and 8-1). This event is defined as loss of all RHR trains.

For the US-APWR, low-pressure letdown line isolation valves are installed. One normally closed air-operated valve is installed in each of two low-pressure letdown lines that are connected to two of four RHR trains. During normal plant cooldown operation, these valves are opened to divert part of the normal RCS flow to the CVCS for purification and the RCS inventory control.

These valves are automatically closed by detection of RCS Low water level signal which actuates when the RCS water level is 0.47 feet higher than loop center, and the CVCS is isolated from the RHRS to prevent loss of RCS inventory at mid-loop operation during plant shutdown.

The initiating frequency of loss of RHR due to OVDR is evaluated as follow:

- Frequency of plant shutdown for the typical analysis case is 1 shutdown / 2 years = 0.5 events per year assuming a refueling shutdown scheduled every 24 months.
- The human error rate for OVDR is evaluated by THERP methodology. The failure probability is 3.0E-03.
- The automatic isolation failure of the low-pressure letdown line is estimated by fault tree (FT) analysis. Two failures are taken into consideration for automatic isolation failure. One is failure of the RCS loop low-level signal, and the other is failure of an air-operated valve to close. The failure probability obtained by quantifying this FT is 2.5E-03.

Therefore, the frequency of loss of RHR due to OVDR during POS 8-1 is:

[0.5 x 3.0E-03 × 2.5E-03] = 3.7E-06/Y.

The ET for the OVDR is shown in Figure 19.1-17. Each top event of this ET is described as follows:

- LOB: Isolation of letdown line

  Following an OVDR event, manual isolation of the letdown line by an air-operated valve is expected. The top event is failure of manual isolation.

The other top events are the same as described previously for the LOCA.

Loss of RHR caused by failing to maintain water level (FLML)

This sequence is applicable to POSs 4-2, 4-3, 8-2 and 8-3.

This category is loss of RHR operation during mid-loop operation caused by loss of coolant inventory. Two sub-categories are considered. One is over-drain (OVDR) and another is failure to maintain water level (FLML).

If the charging injection system or the letdown line system fails and the low-pressure letdown isolation valve fail to close after RCS water level is below the set point for the isolation of low-pressure letdown, FLML is assumed to occur. Since POS 4-1 and POS 8-1 is the beginning of mid-loop operation, and RCS water level is decreasing and is not kept constant, it is assumed that this FLML event is not applicable. On the other hand, in POS 4-2, POS 4-3, POS 8-2 and POS 8-3, FLML is considered as an initiating event.

The frequency of IE = (The probability of failure of charging injection system + the frequency of failure of letdown line) × The probability of automatic isolation failure of low-pressure letdown line

a. Frequency of plant shutdown for the typical analysis case is 1 shutdown / 2 years = 0.5 events per year assuming a refueling shutdown scheduled every 24 months.

b. The loss of charging injection system is evaluated by the fault tree. The failure frequency obtained from quantifying this FT is 4.5E-04. Assumptions applied during the quantification are as follows.

   - Charging pump A: running
   - Charging pump B: out of service
   - Supply to a charging pump is expected only from VCT.

c. As failure of the letdown line, the external leakage or spurious operation of components on the line from letdown line to VCT was assumed. The failure frequency obtained from quantification under this assumption is 7.5E-06.

d. The failure probability of automatic isolation of low-pressure letdown line is evaluated by the fault tree. (Success Criteria is two out of two air-operated valves.) The failure probability obtained from quantifying this FT is 2.5E-03.

e. Therefore, the frequency of IE for these POSs becomes the following.
   = [0.5 x (4.5E-04 + 7.5E-06) × 2.5E-03] = 5.7E-07/Y

The ET for the FLML is shown in Figure 19.1-24. Top events modeled for FLML are the same as described previously for the OVDR.

Loss of RHR caused by other failures (LORH)

Failures of RHR such as RHR pump failure or premature closure of RHR isolation valves cause loss of decay heat removal function. This event is defined as loss of all RHR trains. The frequency is calculated by FT analysis.

The initiating frequency of loss of RHR caused by other failures is evaluated as follows:

- Frequency of plant shutdown for the typical analysis case is 1 shutdown / 2 years = 0.5 events per year assuming a refueling shutdown scheduled every 24 months.
- Loss of RHR caused by other failures during POS 4-3 and POS 8-1 is evaluated in the RHR FT. The failure probabilities obtained from quantifying this fault tree is the following;

  POS 4-3: 9.5E-06

  POS 8-1: 2.1E-05

Therefore, the frequencies of loss of RHR caused by other failures during both POSs are:

POS 4-3: [0.5 x 9.5E-06] = 4.7E-06/Y

POS 8-1: [0.5 x 2.1E-05] = 1.0E-05/Y

The ET for the LORH is shown in Figure 19.1-18. The ET top events are the same as described previously for a LOCA.

<u>Loss of CCW/Essential service water (LOCS)</u>

Failure of CCW or essential service water would result in loss of decay heat removal function. Failure of the CCW or the essential service water of operating trains is assumed and the occurrence frequency is calculated by FT analysis. Loss of CCW/essential service water is evaluated as follow:

The initiating frequency of loss of CCW/essential service water is evaluated as follows:

- Frequency of plant shutdown is 1 shutdown / 2 years = 0.5 events per year assuming a refueling shutdown scheduled every 24 months.
- Loss of CCW/essential service water during POS 4-3 and POS 8-1 is evaluated in the CCW/essential service water FT. The failure probabilities obtained from quantifying this FT is the following:

  POS 4-3: 5.7E-08

  POS 8-1: 5.6E-07

Therefore, the frequencies of loss of CCW/essential service water during both POSs are:

POS 4-3: [0.5 x 5.7E-08] = 2.9E-08/Y

POS 8-1: [0.5 x 5.6E-07] = 2.8E-07/Y

This ET for the LOCS is shown in Figure 19.1-19. The ET top events are described as follows:

- SC: Injection by CVCS using alternate component cooling water system

  Upon loss of CCW/essential service water, the CVCS is only available mitigation system except for gravityinjection. The FSS can be connected to the cooling water line for the charging pumps by remote operation from the MCR. Core damage is prevented by starting a charging pump which is cooled by the alternate component cooling water system.

The other top events are the same as described previously for a LOCA.

Loss of offsite power (LOOP)

This event is defined as the failure of RHR initiated by a LOOP during shutdown condition. The LOOP is initiated by the failure of the power grid or the failure of the station power supply equipment. Following the LOOP, gas turbines, or AAC power attempt to start up and supply ac power. Neither Class 1E GTGs nor AAC causes a loss of decay heat removal.

- The frequency of a LOOP is estimated as 2.0E-01/Y. This is the frequency of the LOOP per reactor year as described in Reference 19.1-41.

- Based on POS 4-3 and POS 8-1 duration of 36 and 60 hours (Table 19.1-82), the probabilities of a LOOP during both POSs are:

  POS 4-3: [2.0E-01 / 8760 x 36] = 8.1E-04/Y

  POS 8-1: [2.0E-01 / 8760 x 60] = 1.3E-03/Y

- The frequency of plant shutdown for the typical analysis case is 1 shutdown / 2 years = 0.5 events per year assuming a refueling shutdown scheduled every 24 months.

Therefore, the frequencies of a LOOP during both POSs are:

POS 4-3: [0.5 x 8.1E-04] =4.0E-04/Y

POS 8-1: [0.5 x 1.3E-03] = 6.7E-04/Y

The ET for the LOOP is shown in Figure 19.1-20. The ET top events are described as follows:

- GT: Power supply by the Class 1E GTGs

  Class 1E GTGs actuate automatically upon detection of blackout sequence after LOOP. Power supply from the GTGs is important for operation of mitigation systems.

- SP: Power supply by AAC

If Class 1E GTGs fail to operate, operators connect AACs to Class 1E ac switchgear to supply power. Operating time of AAC is more than 24 hours. Mitigation systems can operate without offsite power recovery under the AAC success condition.

- AC: Offsite power recovery

  The recovery of the LOOP within an allowable time is considered. The allowable time is defined as time until uncovery of reactor core after a loss of RHR, and is estimated for each POS by MAAP analysis, which is described in Table 19.1-141.

- PR: CCW pumps / essential service water pumps restart

  Following blackout sequence, CCW pumps and essential service water pumps automatically start (or re-start) up after power is supplied to the Class 1E ac bus. If this function fails, the mitigation systems cooled by CCWS are unavailable.

The other top events are the same as described previously for a LOCA or LOCS.

The process of FT analysis is same as for the Level 1 internal events PRA at power (see Subsection 19.1.4.1.1).

Core damage for the LPSD PRA is defined as uncovery of reactor core. Either decay heat removal functions or RCS inventory make-up functions can prevent core damage, regardless of containment cooling.

The assumptions of success criteria specific to the LPSD PRA are as follows:

- When the RCS is at atmospheric pressure (i.e., POS 4-2 and POS 8-2), it is assumed that the gravity injection from SFP is effective. The gravity injection from SFP is established by opening the injection flow path from SFP to RCS cold legs, and the water supply path from the RWSP to SFP. The validity of this function is determined by a system analysis and calculations determining the loss of RCS inventory due to boiling as a function of time and the minimum gravity injection flowrate at atmospheric pressure.

- When the RCS is in mid-loop operation at the closed state (i.e., POS 4-1 and POS 8-3), it is assumed that the reflux cooling with the SGs is effective. The validity of this function is determined by calculating peak RCS temperatures and pressures during various mid-loop POS scenarios as a function of time with consideration of the time required for successful operator mitigative actions.

- Containment cooling function is unnecessary to prevent core damage and to sustain RCS injection due to allowable time until core uncovery and lower decay heat level.

- The success criteria of mitigation functions for LPSD PRA are established based on the engineering judgment, taking into account the similar success criteria of level 1 PRA at power, the decay heat, plant configuration and so on. As an example, the success criteria for each system for POS 4-3 and POS 8-1 are respectively given in Table 19.1-142 and Table 19.1-85.

The method for human error analysis is the same as for the Level 1 internal events PRA at power (see Subsection 19.1.4.1.1). Detailed analysis by THERP method was performed for human errors associated with a loss of RHR due to OVDR event.

The system fault trees are quantified and the results of the quantification are fault tree cutsets and system unavailability. The fault trees are quantified using the same methods that were followed in quantifying the Level 1 internal events PRA at power (see Subsection 19.1.4.1.1).

The LPSD PRA CDF is quantified using the initiating event frequencies, and systems and operator failure models. The core damage accident sequences defined in the event trees are quantified by using the FT linking method using Risk Spectrum® code to obtain the following results:

- Plant CDF for LPSD initiating events
- Frequency of each core damage accident sequence
- Dominant component level cutsets leading to core damage

The inputs to the core damage model include the following:

- Initiating event frequencies
- Event sequences (as shown on the event tree diagrams) for the initiating event categories
- Either a FT model for each event tree top event heading or an HEP
- US-APWR PRA master data base

The truncation frequency used to solve the LPSD PRA is 1.0E-15/RY.

For the LPSD Level 2 PRA, quantification of LRF is performed on the conservative assumption that LRF equals CDF because the containment may be open to the environment or mitigation systems may be out of service during shutdown states.

The key assumptions for LPSD are summarized below;

Key assumptions for IE of LPSD

a. Loss of the SFP cooling function and boric acid dilution events are excluded from initiating events of LPSD since these events are not risk significant.

b. During shutdown, a LOCA caused by RCS pipe rupture is unlikely to occur because the reactor coolant system is at low or atmospheric pressure.

Key assumptions for system models of LPSD

a. In the case of loss of CCW/essential service water, operator will perform alternate charging pump cooling in order to maintain RCS injection by establishing the

injection flow path from FSS tank to charging pump and from charging pump to the FSS tank, and starting the FSS pump.

b. In case a LOCA occurs in the RHR line, operator will perform the isolation of the RHR hot legs suction isolation valves.

c. In case the RCS water level decreases during mid-loop operation and the failure of automatic low-pressure letdown isolation valve occurs, operator will perform the manual isolation of low-pressure letdown line.

d. When the RCS is at atmospheric pressure, gravity injection from SFP is effective. Operator will perform the gravity injection by opening the injection flow path from SFP to RCS cold legs, and supplying water from RWSP to SFP. The validity of this function is determined from a system analysis and calculations determining the loss of RCS inventory due to boiling as a function of time and the minimum gravity injection flowrate at atmospheric pressure.

e. When the RCS is mid-loop operation with the closed state, it is assumed that the reflux cooling with the SGs is effective. The validity of this function is determined from calculating peak RCS temperatures and pressures during various mid-loop POS scenarios as a function of time with consideration of the time required for successful operator mitigative actions.

f. The success criteria of mitigation functions for LPSD PRA are established based on the engineering judgment, taking into account the similar success criteria of level 1 PRA at power, the decay heat, plant configuration and so on.

g. Various temporary equipment will be possible in the containment during LPSD operation for maintenance. However, it is unlikely that these materials reach the RWSP because debris interceptors are installed over the SG compartment floor openings and within the header compartment (see Chapter 6, Subsection 6.2.2). Therefore, potential plugging of the suction strainers due to debris is excluded from the PRA modeling.

h. During plant shutdown, the operability of I&C systems used for mitigation functions such as RHR, charging injection, RWSAT replenishment by refueling water recirculation pump are frequently checked through maintenance activities and evolution of plant operating states. Local I&C equipment for these components as well as the safety logic system can be checked and the I&C hardware are considered to be reliable during plant shutdown. Local I&C equipment of the safety injection pumps, which is a mitigation function during plant shutdown, may not be operated or tested during plant shutdown. However, the DAS can be used to initiated safety injection when the I&C systems have failed, and therefore, signals to actuate safety injection pumps are also reliable. Manual operation of the safety injection pumps through the DAS is available during plant shutdown.

i. Restoration of I&C equipment can be performed within a short period of time by exchanging the faulted card.

j. One of the characteristic designs of the US-APWR is installation and removal of the in-core instrumentation system (ICIS) from the top of the RV head. Operators can start to remove (before refueling) and install (after refueling) the ICIS after the end of RCS draining as shown in Figure 19.1-23. This action cannot be done during RCS draining, which results in an extended duration of mid-loop operation. During actual plant operation, the action to install or remove the ICIS is performed when the RCS water level is above the top of main coolant piping (MCP). In addition, high SG installation level of the US-APWR design allows water level higher than the top of MCP during installation or removal of SG nozzle dams and SG maintenance. The LPSD PRA conservatively assumes that the actions are done with water level at the center of MCP. This assumption is used in the estimation of allowable time to core uncovery after a loss of RHR.

The release categories for the low power and shutdown conditions are defined on the basis of plant operational states (POSs). Frequency and source terms for each release category are quantified and the significant large release sequences are evaluated. The results of source term analysis are used for the inputs of offsite dose evaluation.

Release category for the low power and shutdown (LPSD) conditions is classified into two groups as below.

- Filled RCS state
- Mid-loop Operation State

Among the POSs for LPSD conditions considered in the US-APWR PRA, only POS 3, POS 4, POS 8, POS 9, and POS 11 are considered for the release categories and source term evaluation to represent whether containment is open or not. In POS 3, POS 9, and POS 11, which are categorized as the filled RCS state, the equipment hatch is expected to be closed because RCS temperature is still high or inspection cannot be carried out during the period. On the other hand, the equipment hatch is assumed to be open in POS 4 and POS 8 which are categorized as the mid-loop operation state.

In the quantification of the release categories, it is assumed that the radiological fission products are always released to the environment when core damage accident occurs, i.e. the conditional containment failure probability (CCFP) is equal to one. Regarding the source term evaluation, procedures to isolate the containment after onset of the accident are taken into account and therefore the retention of radiological fission products is considered.

19.1.6.2 Results from the Low-Power and Shutdown Operations PRA

Table 19.1-86 shows a summary of system unavailability of frontline systems. Table 19.1-87 shows a summary of system unavailability of support systems. LPSD initiating event frequencies are shown in Table 19.1-88.

As described in Subsection 19.1.6.1, the detailed analysis is performed for POS 4-3 and POS 8-1. The results are shown in Table 19.1-89 and Figure 19.1-25. As the result of detailed accident sequence quantification, CDFs for POS 4-3 and POS 8-1 are the following;

- CDF for POS 4-3: 3.0E-08/RY
- CDF for POS 8-1: 8.0E-08/RY

The dominant accident sequences for both POSs are respectively given in Table 19.1-143 and Table 19.1-90. The top 50 component level failure combinations (cutsets) associated with these sequences respectively are shown in Table 19.1-144 and Table 19.1-91.

Dominant Sequences for POS 4-3

The top ten accident sequences individually contribute more than 1 percent of the CDF in POS 4-3. These dominant sequences are as follows;

1. POS 4-3: LOOP event (No.6) with the success of Class 1E GTGs and the failure of all mitigation systems, which contributes 35 percent to the CDF in POS 4-3. The dominant cutsets of this sequence is shown in Table 19.1-145.
2. POS 4-3: LOOP event (No.37) with the SBO sequence, including the failure of offsite power recovery, which contributes 16 percent to the CDF in POS 4-3. The dominant cutsets of this sequence is shown in Table 19.1-146.
3. POS 4-3: LOCA event (No.6) with the success of the LOCA isolation and the RCS make-up, and failures of all mitigation systems, which contributes 11 percent to the CDF in POS 4-3. The dominant cutsets of this sequence is shown in Table 19.1-147.
4. POS 4-3: FLML event (No.10) with the success of the isolation of letdown line and failure of the RCS make-up and the safety injection, which contributes 10 percent to the CDF in POS 4-3. The dominant cutsets of this sequence is shown in Table 19.1-148.
5. POS 4-3: LOCA event (No.14) with the failure of the LOCA isolation, the safety injection and the charging injection, which contributes 8 percent to the CDF in POS 4-3. The dominant cutsets of this sequence is shown in Table 19.1-149.
6. POS 4-3: LORH event (No.5) with the failure of the safety injection and the charging injection, which contributes 6 percent to the CDF in POS 4-3. The dominant cutsets of this sequence is shown in Table 19.1-150.
7. POS 4-3: LOOP event (No.9) with the success of Class 1E GTGs and the failure of the CCW re-start and the alternate component cooling, which contributes 5 percent to the CDF in POS 4-3. The dominant cutsets of this sequence is shown in Table 19.1-151.
8. POS 4-3: LOOP event (No.24) with SBO sequence and the success of the AAC, and failure of all mitigation systems, which contributes 5 percent to the CDF in POS 4-3. The dominant cutsets of this sequence is shown in Table 19.1-152.

9. POS 4-3: LOCS event (No.3) with the failure of the alternate component cooling, which contributes 3 percent to the CDF in POS 4-3. The dominant cutsets of this sequence is shown in Table 19.1-153.

10. POS 4-3: LOCA event (No.10) with the success of the LOCA isolation and the failure of the RCS make-up and the safety injection, which contributes 2 percent to the CDF in POS 4-3. The dominant cutsets of this sequence is shown in Table 19.1-154.

The descriptions of the top 5 sequences are provided in the following;

1. POS 4-3: LOOP event (No.6) with the success of Class 1E GTGs and the failure of mitigation systems (1.0E-08/RY)

   This is sequence No.6 of the LOOP event tree in POS 4-3. In this sequence, the Class 1E GTGs succeed to start and run automatically following the initiating event. Multiple random failures such as the RHR operation, the charging injection and the safety injection lead to core damage (the decay heat removal via SGs and gravity injection are not available due to the plant configuration in this POS). The major contributor to CDF is a combination of:

   - Human error for the re-start of RHRS (ID: RSSOO02P)
   - Human error for the initiation of safety injection pump (ID: HPIOO02S-DP2)
   - Human error for the initiation of charging pump and refill of RWSP water (ID: CHIOO02P+RWS-DP3)

2. POS 4-3: LOOP event (No.37) with the SBO sequence including failure of offsite power recovery (4.7E-09/RY)

   This is sequence No.37 of the LOOP event tree in POS 4-3. This is station blackout sequence, Class 1E GTGs and AAC fail following the initiating event. The recovery of offsite power is not successful either. All mitigation systems that are supported by ac power are unavailable. The major contributor to CDF is a combination of:

   - CCF of Class 1E (A, B, C and D) gas turbine generators (ID: EPSCF4DLLRGTG-ALL)
   - Human error for the connection of AAC generator (ID: EPSOO02RDG)
   - Failure of offsite power recovery (ID: ACRPOS8-1-F)

3. POS 4-3: LOCA event (No.6) with the success of the LOCA isolation and the RCS make-up, and failures of other mitigation systems (3.3E-09/RY)

   This is sequence No.6 of the LOCA event tree in POS 4-3. In this sequence, the isolation of the LOCA and the RCS make-up are successful. Multiple random failures such as the RHR operation, the safety injection and the charging injection lead to core damage. The major contributor to CDF is a combination of:

- Human error for the initiation of RHRS (ID: RSSOO02LINE+P)
- Human error for the initiation of safety injection pump (ID: HPIOO02S-DP2)
- Human error for the initiation of charging pump and refill RWSP water (ID: CHIOO02RWS-DP3)

4. POS 4-3: FLML event (No.10) with the success of the isolation of letdown line and failure of the RCS make-up and the safety injection (2.9E-09/RY)

   This is sequence No.10 of the FLML event tree in POS 4-3. In this sequence, the isolation of the source of initiating event is successful. Multiple random failures such as the RCS make-up and the safety injection lead to core damage. The major contributor to CDF is a combination of:

   - Failure of low-pressure letdown line isolation valve (ID: CVCAVCD024C or CVCAVCD024B) (initiating event frequency contributors)
   - Human error for initiation of safety injection pump (ID: HPIOO02S)

5. POS 4-3: LOCA event (No.14) with the failure of the LOCA isolation, the safety injection and the charging injection (2.3E-09/RY)

   This is sequence No.14 of the LOCA event tree in POS 4-3. Multiple random failures such as the LOCA isolation, the safety injection and the charging injection lead to core damage. The major contributor to CDF is a combination of:

   - Human error for the isolation of LOCA (ID: LOAOO02LC)
   - Human error for the initiation of safety injection pump (ID: HPIOO02S-DP2)
   - Human error for the refill of RWSP water (ID: CHIOO02RWS-DP3)

Dominant Sequences for POS 8-1

The top 9 accident sequences individually contribute more than 1 percent of the CDF in POS 8-1. These dominant sequences are as follows:

1. POS 8-1: LOCA event (No.19) with the success of the LOCA isolation and the failure of the RCS make-up and all mitigation systems, which contributes 31 percent to the CDF in POS 8-1. The dominant cutsets of this sequence is shown in Table 19.1-155.

2. LOOP event (No.6) with the success of Class 1E GTGs and the failure of all mitigation systems, which contributes 22 percent to the CDF in POS 8-1. The dominant cutsets of this sequence is shown in Table 19.1-156.

3. POS 8-1: LOOP event (No.37) with the SBO sequence and failure of offsite power recover, which contributes 12 percent to the CDF in POS 8-1. The dominant cutsets of this sequence is shown in Table 19.1-157.

4. POS 8-1: LOCS event (No.3) with the failure of the alternate component cooling, which contributes 10 percent to the CDF in POS 8-1. The dominant cutsets of this sequence is shown in Table 19.1-158.

5. POS 8-1: LOCA event (No.6) with the success of the LOCA isolation and the RCS make-up, and failures of all mitigation systems, which contributes 7 percent to the CDF in POS 8-1. The dominant cutsets of this sequence is shown in Table 19.1-159.

6. POS 8-1: LOOP event (No.9) with the success of Class 1E GTGs and the failure of the CCW re-start and the alternate component cooling, which contributes 5 percent to the CDF in POS 8-1. The dominant cutsets of this sequence is shown in Table 19.1-160.

7. POS 8-1: LOCA event (No.14) with the failure of the LOCA isolation, the safety injection and the charging injection, which contributes 5 percent to the CDF in POS 8-1. The dominant cutsets of this sequence is shown in Table 19.1-161.

8. POS 8-1: LORH event (No.5) with the failure of the safety injection and the charging injection, which contributes 5 percent to the CDF in POS 8-1. The dominant cutsets of this sequence is shown in Table 19.1-162.

9. POS 8-1: OVDR event (No.10) with the success of the isolation of letdown line, the failure of the RCS make-up and the safety injection, which contributes 2 percent to the CDF in POS 8-1. The dominant cutsets of this sequence is shown in Table 19.1-163.

The descriptions of the top five sequences are provided in the following:

1. POS 8-1: LOCA event (No.10) with the success of the LOCA isolation and failures of other mitigation systems (2.5E-08/RY)

   This is sequence No.10 of the LOCA event tree in POS 8-1. In this sequence, the isolation of the source of the LOCA is successful. Multiple random failures such as the RCS make-up and the safety injection lead to core damage (The decay heat removal via SGs and gravity injection are not available due to the plant configuration in this POS). The major contributor to CDF is a combination of:

   - Human error for the initiation of charging pump (ID: CHIOO02P)

   - Human error for the initiation of safety injection pump (ID: HPIOO02S-DP2)

2. POS 8-1: LOOP event (No.6) with the success of Class 1E GTGs and the failure of mitigation systems (1.7E-08/RY)

   This is sequence No.6 of the LOOP event tree in POS 8-1. In this sequence, the Class 1E GTGs succeed to start and run automatically following the initiating event. Multiple random failures such as the RHR operation, the charging injection and the safety injection lead to the core damage (the decay heat removal via SG and gravity injection are not available due to the plant configuration in this POS). The major contributor to CDF is a combination of:

- Human error for the re-start of RHRS (ID: RSSOO02P)
- Human error for the initiation of safety injection pump (ID: HPIOO02S-DP2)
- Human error for the initiation of charging pump and refill of RWSP water (ID: CHIOO02P+RWS-DP3)

3. POS 8-1: LOOP event (No.37) with the SBO sequence and failure of offsite power recover (9.3E-09/RY)

   This is sequence No.37 of the LOOP event tree in POS 8-1. This is station blackout sequence, Class 1E GTGs and AAC fail following the initiating event. The recovery of offsite power is not successful either. All mitigation systems that are supported by ac power are unavailable. The major contributor to core damage frequency is a combination of:

   - CCF of Class 1E gas turbine generators (ID: EPSCF3DLLRGTG-ALL)
   - Human error for the connection of AAC generator (ID: EPSOO02RDG)
   - Failure of offsite power recovery (ID: ACRPOS8-1-F)

4. POS 8-1: LOCS event (No.3) with the failure of alternate component cooling (8.1E-09/RY)

   This is sequence No.3 of the LOCS event tree in POS 8-1. This sequence has a loss of CCW/ESW initiator. The mitigation systems such as the RHR operation, the charging injection and the safety injection system that are supported by CCWS/ESWS are not available in this initiating event. Moreover, the decay heat removal via SGs and gravity injection are not available for the same reason described above. Failure of injection by the charging pump using the alternate component cooling water system leads to core damage. The major contributors to CDF due to loss of CCW/ESW are:

   - CCF of CCW/ESW pumps (A, B and C) or CCF of CCW heat exchangers (A, B and C) (initiating event frequency contributors)
   - Human error for initiation of alternate component cooling (ID: ACWOO02SC)
   - Failure of offsite power recovery (ID: ACRPOS8-1-F)

5. POS 8-1: LOCA event (No.6) with the success of the LOCA isolation and the RCS make-up and failures of other mitigation systems (5.9E-09/RY)

   This is sequence No.6 of the LOCA event tree in POS 8-1. In this sequence, the isolation of the source of the LOCA and the RCS make-up are successful. Multiple random failures such as the RHR operation, the safety injection and the charging injection lead to core damage. The major contributor to CDF is a combination of:

   - Human error for the initiation of RHRS (ID: RSSOO02LINE+P)

- Human error for the initiation of safety injection pump (ID: HPIOO02S-DP2)
- Human error for the initiation of charging pump and refill RWSP water (ID: CHIOO02RWS-DP3)

As described above, the detailed analysis is carried out for POS 4-3 and POS 8-1. Regarding the LPSD PRA estimation of entire POSs, other POSs are assessed by the simplified method. Since almost all of mitigation systems of LPSD need operator action, quantitative analysis results are greatly influenced by the dependability between tasks of human error. Table 19.1-91 shows that the dominant cutsets of CDF are human error, especially dependence between tasks. This result indicated that the effect of human errors dependency between tasks is greater than contribute of hardware failure. Based on this insight, it can be thought that the CDF of other POSs is basically assessed using the values of the human errors in consideration of the dependability between tasks.

In other POSs, the number of mitigation system and operator action and the grace time concerning the offsite power recovery might be different from POS 4-3 or POS 8-1. Especially for the mitigation system, the gravity injection and the decay heat removal via SGs can be taken into account in certain POSs.

The conditional core damage probability (CCDP) of each sequence in other POSs is originally based on that of each sequence in POS 4-3 or POS 8-1. And then, this CCDP is modified taking into account the increase of mitigation systems and the difference of allowable time to core uncovery compared to POS 4-3 or POS 8-1.

For the IE frequency, such as loss of CCW, contribution of human error is relatively small, so the frequency of IEs is quantified by detailed analysis for each POSs. The CDF of other POSs is assessed by the three values shown below;

- The frequency of IEs evaluated for each POS
- CCDP of each sequence in POS 4-3 or POS 8-1
- The modification factor of CCDP, based on the difference of the number of effective mitigation systems and human error dependency and the difference of allowable time to core uncovery (only for LOOP event)

CDF for other POSs is assessed using the following equation for each core damage sequences.

$$CDF_{POS\ X,\ Sequence\ Y} = IE_{POS\ X} \times CCDP_{POS\ 4\text{-}3\ or\ 8\text{-}1,\ Sequence\ Y} \times factor_{POS\ X,\ Sequence\ Y}$$

$CDF_{POS\ X,\ Sequence\ Y}$: CDF of the sequence Y in POS X

$IE_{POS\ X}$: IE frequency of POS X

$CCDP_{POS\ 4\text{-}3\ or\ 8\text{-}1,\ Sequence\ Y}$: CCDP of the sequence Y in POS 8-1

$factor_{POS\ X,\ Sequence\ Y}$: Modification factor of the sequence Y in POS X

The values of the modification factors of each sequences are evaluated as described below.

- When the number of mitigation system increase more than that of POS 4-3 or POS 8-1, and the number of failed operator tasks in the same sequence is two or less, the value of 0.1 is applied as the modification factor. However, the sequence that includes the combinations of CV and GI or GI and SC is exception and a value of 0.2 is applied for such sequence. This is because these mitigation functions require refill of the RWST, and therefore, the dependency between these tasks are high.

- When the number of mitigation system increase more than that of POS 4-3 or POS 8-1, and the number of failed operator tasks in the same sequence is three, the value of 0.2 is applied as the modification factor. However, the sequence that includes the combination of CV and GI or GI and SC is an exception and a value of 0.5 is applied for such sequence.

- When the number of mitigation system increases more than that of POS 4-3 or POS 8-1, and the number of failed operator tasks in the same sequence is four, the value of 0.5 is applied as the modification factor.

- When the number of mitigation system is the same as POS 4-3 or POS 8-1, or the number of failed operator tasks in the same sequence is five or more, the value of 1.0 is applied as the modification factor.

- Differences in available time for offsite power recovery are considered. Available time for offsite power recovery varies with POSs since decay heat generation and initial water level varies with POSs. For scenarios that take credit for offsite power recovery, the difference in failure probabilities of offsite power recovery compared to POS 8-1 is factored in the reduction factor. The failure probability of offsite power recovery for each POS is evaluated based on the allowable time until uncovery of reactor core evaluated by MAAP analysis, considering the POS specific initial inventory and decay heat generation.

CDFs of other POSs are given in Table 19.1-89. The overall estimate of CDF for all LPSD POSs is 1.8E-07/RY.

Loss of offsite power (LOOP) and LOCA initiating events have large contribution to the total CDF. Loss of RHR due to over-drain (OVDR) and caused by failing to maintain water level (FLML) has small impact on total CDF. This is because automatic isolation for low-pressure letdown line is effective to reduce risk caused by these initiating events. In addition, the risk profile is similar for all POSs.

Significant core damage sequences for each POSs other than POS 4-3 and POS 8-1 are shown below.

Dominant Sequences for POS 3

The top 8 accident sequences individually contribute more than 1 percent of the CDF in POS 3. These dominant sequences are as follows:

1. POS 3: LOOP event (No.6) with the success of Class 1E GTGs and the failure of all mitigation systems, which contributes 25 percent to the CDF in POS 3.

2. POS 3: LOCS event (No.3) with the failure of the alternate component cooling, which contributes 22 percent to the CDF in POS 3.

3. POS 3: LOCA event (No.6) with the success of the LOCA isolation and the RCS make-up, and failures of all mitigation systems, which contributes 16 percent to the CDF in POS 3.

4. POS 3: LOOP event (No.37) with the SBO sequence, including the failure of offsite power recovery, which contributes 16 percent to the CDF in POS 3.

5. POS 3: LOCA event (No.14) with the failure of the LOCA isolation, the safety injection and the charging injection, which contributes 11 percent to the CDF in POS 3.

6. POS 3: LOOP event (No.9) with the success of Class 1E GTGs and the failure of the CCW re-start and the alternate component cooling, which contributes 7 percent to the CDF in POS 3.

7. POS 3: LOOP event (No.24) with SBO sequence and the success of the AAC, and failure of all mitigation systems, which contributes 2 percent to the CDF in POS 3.

8. POS 3: LORH event (No.5) with the failure of the cooling via SGs, the safety injection and the charging injection, which contributes 2 percent to the CDF in POS 3.

The descriptions of the top five sequences are provided in the following:

1. POS 3: LOOP event (No.6) with the success of Class 1E GTGs and the failure of mitigation systems (3.4E-09/RY)

   The CCDP of LOOP No.6 in POS 4-3 is basically used based on the same number of available GTGs. And then, this CCDP decreased by factor 0.5 is finally used as the CCDP of this sequence in POS 3, because the cooling via SGs is available in this sequence and the number of failed operator tasks is four.

   In this sequence, the Class 1E GTGs successfully start and run automatically following the initiating event. Multiple random failures such as the RHR operation, the cooling via SGs, the charging injection and the safety injection lead to core damage.

2. POS 3: LOCS event (No.3) with the failure of the alternate component cooling (3.0E-09/RY)

   The CCDP of LOCS No.3 in POS 8-1 is used as CCDP of this sequence in POS 3 because the number of available mitigation systems is the same as POS 8-1 (CCDP of POS 4-3 can be also used instead of POS 8-1 because both CCDPs are almost the same).

In this sequence, the mitigation systems such as the RHR operation, the cooling via SGs fed by motor-driven EFWP, the charging injection and the safety injection system that are supported by CCWS/ESWS are not available in this initiating event. Failure of the injection by the charging pump using the alternate component cooling water system leads to core damage.

3. POS 3: LOCA event (No.6) with the success of the LOCA isolation and the RCS make-up and failures of other mitigation systems (2.2E-09/RY)

   The CCDP of LOCA No.6 in POS 4-3 is basically used (CCDP of POS 8-1 can also be used instead of POS 4-3 because both CCDPs are almost the same). All of RHR trains are running during this POS, therefore all of RHR trains become unavailable due to the occurrence of LOCA. On the other hand, the cooling via SGs is available in this sequence. As a result, this CCDP is used as CCDP of this sequence in POS 3 because the total number of available mitigation systems is the same as POS 4-3.

   In this sequence, the LOCA isolation and the RCS make-up are successful. Multiple random failures such as the cooling via SGs, the safety injection and the charging injection lead to core damage.

4. POS 3: LOOP event (No.37) with the SBO sequence and failure of offsite power recover (1.7E-09/RY)

   The CCDP of LOOP No.37 in POS 4-3 is basically used based on the same number of available GTGs and mitigation systems. And then, this CCDP decreased by the difference of allowable time for AC power recovery is finally used as CCDP of this sequence in POS 3.

   This is a station blackout sequence, Class 1E GTGs and AAC fail following the initiating event. The recovery of offsite power is not successful either. All mitigation systems that are supported by ac power are unavailable.

5. POS 3: LOCA event (No.14) with the failure of the LOCA isolation, the safety injection and the charging injection (1.5E-09/RY)

   The CCDP of LOCA No.14 in POS 4-3 is used as CCDP of this sequence in POS 3 based on the same number of available mitigation systems because the cooling via SGs is not available in this sequence due to the failure of isolation of source of LOCA (CCDP of POS 8-1 can also be used instead of POS 4-3 because both CCDPs are almost the same).

   In this sequence, multiple random failures such as the LOCA isolation, the safety injection and the charging injection lead to core damage.

Dominant Sequences for POS 4-1

The top nine accident sequences individually contribute more than 1 percent of the CDF in POS 4-1. These dominant sequences are as follows:

1. POS 4-1: LOCS event (No.3) with the failure of the alternate component cooling, which contributes 34 percent to the CDF in POS 4-1.

2. POS 4-1: LOOP event (No.6) with the success of Class 1E GTGs and the failure of all mitigation systems, which contributes 26 percent to the CDF in POS 4-1.

3. POS 4-1: LOCA event (No.14) with the failure of the LOCA isolation, the safety injection and the charging injection, which contributes 11 percent to the CDF in POS 4-1.

4. POS 4-1: LOCA event (No.6) with the success of the LOCA isolation and the RCS make-up, and failures of all mitigation systems, which contributes 8 percent to the CDF in POS 4-1.

5. POS 4-1: LOOP event (No.9) with the success of Class 1E GTGs and the failure of the CCW re-start and the alternate component cooling, which contributes 8 percent to the CDF in POS 4-1.

6. POS 4-1: LOOP event (No.37) with the SBO sequence, including the failure of offsite power recovery, which contributes 3 percent to the CDF in POS 4-1.

7. POS 4-1: LORH event (No.5) with the failure of the cooling via SGs, the safety injection and the charging injection, which contributes 3 percent to the CDF in POS 4-1.

8. POS 4-1: OVDR event (No.14) with the failure of the isolation of letdown line, the safety injection and the charging injection, which contributes 2 percent to the CDF in POS 4-1.

9. POS 4-1: OVDR event (No.10) with the success of isolation of letdown line, the failure of the RCS make-up, the cooling via SGs and the safety injection, which contributes 2 percent to the CDF in POS 4-1.

The descriptions of the top five sequences are provided in the following:

1. POS 4-1: LOCS event (No.3) with the failure of the alternate component cooling (4.5E-09/RY)

   The CCDP of LOCS No.3 in POS 8-1 is used as CCDP of this sequence in POS 4-1 because the number of available mitigation systems is the same as POS 8-1 (CCDP of POS 4-3 can also be used instead of POS 8-1 because both CCDPs are almost the same).

   In this sequence, the mitigation systems such as the RHR operation, the cooling via SGs fed by motor-driven EFWP, the charging injection and the safety injection system that are supported by CCWS/ESWS are not available in this initiating event. Moreover, the gravity injection are not available due to the plant configuration in this POS. Failure of the injection by the charging pump using the alternate component cooling water system leads to core damage.

2. POS 4-1: LOOP event (No.6) with the success of Class 1E GTGs and the failure of mitigation systems (3.4E-09/RY)

   The CCDP of LOOP No.6 in POS 4-3 is basically used based on the same number of available GTGs. And then, this CCDP decreased by factor 0.5 is finally used as CCDP of this sequence in POS 4-1, because the cooling via SGs is available in this sequence and the number of failed operator tasks is four.

   In this sequence, the Class 1E GTGs successfully start and run automatically following the initiating event. Multiple random failures such as the RHR operation, the cooling via SGs, the charging injection and the safety injection lead to core damage.

3. POS 4-1: LOCA event (No.14) with the failure of the LOCA isolation, the safety injection and the charging injection (1.5E-09/RY)

   The CCDP of LOCA No.14 in POS 4-3 is used as CCDP of this sequence in POS 4-1 based on the same number of available mitigation systems because the cooling via SGs is not available in this sequence due to the failure of isolation of source of LOCA (CCDP of POS 8-1 can also be used instead of POS 4-3 because both CCDPs are almost the same).

   In this sequence, multiple random failures such as the LOCA isolation, the safety injection and the charging injection lead to core damage.

4. POS 4-1: LOCA event (No.6) with the success of the LOCA isolation and the RCS make-up and failures of other mitigation systems (1.1E-09/RY)

   The CCDP of LOCA No.6 in POS 4-3 is basically used (CCDP of POS 8-1 can also be used instead of POS 4-3 because both CCDPs are almost the same). And then, this CCDP decreased by factor 0.5 is finally used as CCDP of this sequence in POS 4-1 because the cooling via SGs is available in this sequence and the number of failed operator tasks is four.

   In this sequence, the LOCA isolation and the RCS make-up are successful. Multiple random failures such as the RHR operation, the cooling via SGs, the safety injection and the charging injection lead to core damage.

5. POS 4-1: LOOP event (No.9) with the success of Class 1E GTGs and the failure of the CCW re-start and the alternate component cooling (1.0E-09/RY)

   The CCDP of LOOP No.9 in POS 4-3 is used as the CCDP of this sequence in POS 4-1 based on the same number of available GTGs and mitigation systems.

   In this sequence, the GTGs after LOOP event are successful. Multiple random failures such as the CCWS re-start. Moreover, the gravity injection is not available due to the plant configuration in this POS. Failure of the injection by the charging pump using the alternate component cooling water system leads to core damage.

Dominant Sequences for POS 4-2

The top nine accident sequences individually contribute more than 1 percent of the CDF in POS 4-2. These dominant sequences are as follows:

1. POS 4-2: LOOP event (No.6) with the success of Class 1E GTGs and the failure of all mitigation systems, which contributes 33 percent to the CDF in POS 4-2.

2. POS 4-2: LOOP event (No.37) with the SBO sequence, including the failure of offsite power recovery, which contributes 30 percent to the CDF in POS 4-2.

3. POS 4-2: LOCA event (No.6) with the success of the LOCA isolation and the RCS make-up, and failures of all mitigation systems, which contributes 10 percent to the CDF in POS 4-2.

4. POS 4-2: LOCA event (No.14) with the failure of the LOCA isolation, the safety injection, the charging injection and the gravity injection, which contributes 7 percent to the CDF in POS 4-2.

5. POS 4-2: FLML event (No.10) with the success of the isolation of letdown line and failure of the RCS make-up, the safety injection and the gravity injection, which contributes 6 percent to the CDF in POS 4-2.

6. POS 4-2: LORH event (No.5) with the failure of the safety injection, the charging injection and the gravity injection, which contributes 5 percent to the CDF in POS 4-2.

7. POS 4-2: LOOP event (No.24) with SBO sequence and the success of the AAC, and failure of all mitigation systems, which contributes 4 percent to the CDF in POS 4-2.

8. POS 4-2: LOOP event (No.9) with the success of Class 1E GTGs and the failure of the CCW re-start, the gravity injection and the alternate component cooling, which contributes 2 percent to the CDF in POS 4-2.

9. POS 4-2: LOCS event (No.3) with the failure of the gravity injection and the alternate component cooling, which contributes 1 percent to the CDF in POS 4-2.

The descriptions of the top five sequences are provided in the following:

1. POS 4-2: LOOP event (No.6) with the success of Class 1E GTGs and the failure of mitigation systems (1.7E-09/RY)

   The CCDP of LOOP No.6 in POS 4-3 is basically used based on the same number of available GTGs. And then, this CCDP decreased by factor 0.5 is finally used as CCDP of this sequence in POS 4-2, because the gravity injection is available in this sequence and the number of failed operator tasks is four.

   In this sequence, the Class 1E GTGs successfully start and run automatically following the initiating event. Multiple random failures such as the RHR operation,

the safety injection, the charging injection and the gravity injection lead to core damage.

2. POS 4-2: LOOP event (No.37) with the SBO sequence and failure of offsite power recover (1.6E-09/RY)

   The CCDP of LOOP No.37 in POS 4-3 is basically used based on the same number of available GTGs and mitigation systems. And then, this CCDP decreased by the difference of allowable time for AC power recovery is finally used as CCDP of this sequence in POS 4-2.

   This is a station blackout sequence, Class 1E GTGs and AAC fail following the initiating event. The recovery of offsite power is not successful either. All mitigation systems that are supported by ac power are unavailable.

3. POS 4-2: LOCA event (No.6) with the success of the LOCA isolation and the RCS make-up and failures of other mitigation systems (5.4E-10/RY)

   The CCDP of LOCA No.6 in POS 4-3 is basically used (CCDP of POS 8-1 can also be used instead of POS 4-3). And then, this CCDP decreased by factor 0.5 is finally used as CCDP of this sequence in POS 4-2 because the gravity injection is available in this sequence and the number of failed operator tasks is four.

   In this sequence, the LOCA isolation and the RCS make-up are successful. Multiple random failures such as the RHR operation, the safety injection, the charging injection and the gravity injection lead to core damage.

4. POS 4-2: LOCA event (No.14) with the failure of the LOCA isolation, the safety injection, the charging injection and the gravity injection (3.8E-10/RY)

   The CCDP of LOCA No.14 in POS 4-3 is basically used (CCDP of POS 8-1 can also be used instead of POS 4-3 because both CCDPs are almost the same). And then, this CCDP decreased by factor 0.5 is finally used as CCDP of this sequence in POS 4-2 because the gravity injection is available in this sequence and the number of failed operator tasks is four.

   In this sequence, multiple random failures such as the LOCA isolation, the safety injection, the charging injection and the gravity injection lead to core damage.

5. POS 4-2: FLML event (No.10) with the success of the isolation of letdown line and failure of the RCS make-up, the safety injection and the gravity injection (2.9E-10/RY)

   The CCDP of FLML No.10 in POS 4-3 is used (FLML is only assessed for POS 4-3 by detailed analysis). And then, this CCDP decreased by factor 0.1 is finally used as CCDP of this sequence in POS 4-2 because the gravity injection is available in this sequence and the number of failed operator tasks is two.

   In this sequence, multiple random failures such as the safety injection and the gravity injection lead to core damage.

Dominant Sequences for POS 8-2

The top nine accident sequences individually contribute more than 1 percent of the CDF in POS 8-2. These dominant sequences are as follows:

1. POS 8-2: LOOP event (No.37) with the SBO sequence, including the failure of offsite power recovery, which contributes 33 percent to the CDF in POS 8-2.
2. POS 8-2: LOOP event (No.6) with the success of Class 1E GTGs and the failure of all mitigation systems, which contributes 31 percent to the CDF in POS 8-2.
3. POS 8-2: LOCA event (No.6) with the success of the LOCA isolation and the RCS make-up, and failures of all mitigation systems, which contributes 10 percent to the CDF in POS 8-2.
4. POS 8-2: LOCA event (No.14) with the failure of the LOCA isolation, the safety injection, the charging injection and the gravity injection, which contributes 7 percent to the CDF in POS 8-2.
5. POS 8-2: FLML event (No.10) with the success of the isolation of letdown line and failure of the RCS make-up, the safety injection and the gravity injection, which contributes 5 percent to the CDF in POS 8-2.
6. POS 8-2: LORH event (No.5) with the failure of the safety injection, the charging injection and the gravity injection, which contributes 5 percent to the CDF in POS 8-2.
7. POS 8-2: LOOP event (No.9) with the success of Class 1E GTGs and the failure of the CCW re-start, the gravity injection and the alternate component cooling, which contributes 3 percent to the CDF in POS 8-2.
8. POS 8-2: LOCS event (No.3) with the failure of the gravity injection and the alternate component cooling, which contributes 2 percent to the CDF in POS 8-2.
9. POS 8-2: LOCA event (No.10) with the success of the LOCA isolation and the failure of the RCS make-up and the safety injection, which contributes 1 percent to the CDF in POS 8-2.

The descriptions of the top five sequences are provided in the following:

1. POS 8-2: LOOP event (No.37) with the SBO sequence and failure of offsite power recover (1.9E-09/RY)

   The CCDP of LOOP No.37 in POS 8-1 is basically used based on the same number of available GTGs. And then, this CCDP decreased by the difference of allowable time for AC power recovery is finally used as CCDP of this sequence in POS 8-2.

   This is a station blackout sequence, Class 1E GTGs and AAC fail following the initiating event. The recovery of offsite power is not successful either. All mitigation systems that are supported by ac power are unavailable.

2. POS 8-2: LOOP event (No.6) with the success of Class 1E GTGs and the failure of mitigation systems (1.7E-09/RY)

   The CCDP of LOOP No.6 in POS 8-1 is basically used based on the same number of available GTGs. And then, this CCDP decreased by factor 0.5 is finally used as CCDP of this sequence in POS 8-2, because the gravity injection is available in this sequence and the number of failed operator tasks is four.

   In this sequence, the Class 1E GTGs successfully start and run automatically following the initiating event. Multiple random failures such as the RHR operation, the safety injection, the charging injection and the gravity injection lead to core damage.

3. POS 8-2: LOCA event (No.6) with the success of the LOCA isolation and the RCS make-up and failures of other mitigation systems (5.4E-10/RY)

   The CCDP of LOCA No.6 in POS 4-3 is basically used (CCDP of POS 8-1 can also be used instead of POS 4-3 because both CCDPs are almost the same). And then, this CCDP decreased by factor 0.5 is finally used as CCDP of this sequence in POS 8-2 because the gravity injection is available in this sequence and the number of failed operator tasks is four.

   In this sequence, the LOCA isolation and the RCS make-up are successful. Multiple random failures such as the RHR operation, the safety injection, the charging injection and the gravity injection lead to core damage.

4. POS 8-2: LOCA event (No.14) with the failure of the LOCA isolation, the safety injection, the charging injection and the gravity injection (3.8E-10/RY)

   The CCDP of LOCA No.14 in POS 4-3 is basically used (CCDP of POS 8-1 can also be used instead of POS 4-3 because both CCDPs are almost the same). And then, this CCDP decreased by factor 0.5 is finally used as CCDP of this sequence in POS 8-2 because the gravity injection is available in this sequence and the number of failed operator tasks is four.

   In this sequence, multiple random failures such as the LOCA isolation, the safety injection, the charging injection and the gravity injection lead to core damage.

5. POS 8-2: FLML event (No.10) with the success of the isolation of letdown line and failure of the RCS make-up, the safety injection and the gravity injection (2.9E-10/RY)

   The CCDP of FLML No.10 in POS 4-3 is used (FLML is only assessed for POS 4-3 by detailed analysis). And then, this CCDP decreased by factor 0.1 is finally used as CCDP of this sequence in POS 8-2 because the gravity injection is available in this sequence and the number of failed operator tasks is two.

   In this sequence, multiple random failures such as the safety injection and the gravity injection lead to core damage.

Dominant Sequences for POS 8-3

The top ten accident sequences individually contribute more than 1 percent of the CDF in POS 8-3. These dominant sequences are as follows:

1. POS 8-3: LOOP event (No.6) with the success of Class 1E GTGs and the failure of all mitigation systems, which contributes 33 percent to the CDF in POS 8-3.

2. POS 8-3: LOOP event (No.9) with the success of Class 1E GTGs and the failure of the CCW re-start and the alternate component cooling, which contributes 16 percent to the CDF in POS 8-3.

3. POS 8-3: LOCA event (No.14) with the failure of the LOCA isolation, the safety injection and the charging injection, which contributes 14 percent to the CDF in POS 8-3.

4. POS 8-3: LOCS event (No.3) with the failure of the alternate component cooling, which contributes 11 percent to the CDF in POS 8-3.

5. POS 8-3: LOCA event (No.6) with the success of the LOCA isolation and the RCS make-up, and failures of all mitigation systems, which contributes 10 percent to the CDF in POS 8-3.

6. POS 8-3: LOOP event (No.37) with the SBO sequence, including the failure of offsite power recovery, which contributes 7 percent to the CDF in POS 8-3.

7. POS 8-3: FLML event (No.10) with the success of the isolation of letdown line and failure of the RCS make-up and the safety injection, which contributes 3 percent to the CDF in POS 8-3.

8. POS 8-3: LORH event (No.5) with the failure of the cooling via SGs, the safety injection and the charging injection, which contributes 2 percent to the CDF in POS 8-3.

9. POS 8-3: FLML event (No.14) with the failure of the isolation of letdown line and the safety injection, which contributes 1 percent to the CDF in POS 8-3.

10. POS 8-3: LOOP event (No.36) with SBO sequence, the success of AC power recovery and the failure of the CCW re-start and the alternate component cooling, which contributes 1 percent to the CDF in POS 8-3.

The descriptions of the top five sequences are provided in the following:

1. POS 8-3: LOOP event (No.6) with the success of Class 1E GTGs and the failure of mitigation systems (3.5E-09/RY)

   The CCDP of LOOP No.6 in POS 8-1 is basically used based on the same number of available GTGs. And then, this CCDP decreased by factor 0.5 is finally used as CCDP of this sequence in POS 8-3, because the cooling via SGs is available in this sequence and the number of failed operator tasks is four.

In this sequence, the Class 1E GTGs successfully start and run automatically following the initiating event. Multiple random failures such as the RHR operation, the cooling via SGs, the safety injection and the charging injection lead to core damage.

2. POS 8-3: LOOP event (No.9) with the success of Class 1E GTGs and the failure of the CCW re-start and the alternate component cooling (1.7E-09/RY).

   The CCDP of LOOP No.9 in POS 8-1 is used as the CCDP of this sequence in POS 8-3 based on the same number of available GTGs and mitigation systems.

   In this sequence, the GTG after LOOP event is successful. Multiple random failures such as the CCWS re-start and the alternate component cooling water system lead to core damage.

3. POS 8-3: LOCA event (No.14) with the failure of the LOCA isolation, the safety injection and the charging injection (1.5E-09/RY)

   The CCDP of LOCA No.14 in POS 4-3 is used as CCDP of this sequence in POS 8-3 based on the same number of available mitigation systems because the cooling via SGs is not available in this sequence due to the failure of isolation of source of LOCA (CCDP of POS 8-1 can also be used instead of POS 4-3 because both CCDPs are almost the same).

   In this sequence, multiple random failures such as the LOCA isolation, the safety injection and the charging injection to core damage.

4. POS 8-3: LOCS event (No.3) with the failure of the alternate component cooling (1.1E-09/RY).

   The CCDP of LOCS No.3 in POS 8-1 is used as CCDP of this sequence in POS 8-3 because the number of available mitigation systems is the same as POS 8-1 (CCDP of POS 4-3 can be also used instead of POS 8-1 because both CCDPs are almost the same).

   In this sequence, the mitigation systems such as the RHR operation, the cooling via SGs fed by motor-driven EFWP, the charging injection and the safety injection system that are supported by CCWS/ESWS are not available in this initiating event. Failure of the injection by the charging pump using the alternate component cooling water system leads to core damage.

5. POS 8-3: LOCA event (No.6) with the success of the LOCA isolation and the RCS make-up and failures of other mitigation systems (1.1E-09/RY)

   The CCDP of LOCA No.6 in POS 4-3 is basically used (CCDP of POS 8-1 can also be used instead of POS 4-3). And then, this CCDP decreased by factor 0.5 is finally used as CCDP of this sequence in POS 8-3 because the cooling via SGs is available in this sequence and the number of failed operator tasks is four.

In this sequence, the LOCA isolation and the RCS make-up are successful. Multiple random failures such as the RHR operation, the cooling via SGs, the safety injection and the charging injection lead to core damage.

Dominant Sequences for POS 9

The top nine accident sequences individually contribute more than 1 percent of the CDF in POS 9. These dominant sequences are as follows:

1. POS 9: LOOP event (No.6) with the success of Class 1E GTGs and the failure of all mitigation systems, which contributes 34 percent to the CDF in POS 9.

2. POS 9: LOOP event (No.9) with the success of Class 1E GTGs and the failure of the CCW re-start and the alternate component cooling, which contributes 17 percent to the CDF in POS 9.

3. POS 9: LOCA event (No.14) with the failure of the LOCA isolation, the safety injection and the charging injection, which contributes 15 percent to the CDF in POS 9.

4. POS 9: LOCS event (No.3) with the failure of the alternate component cooling, which contributes 11 percent to the CDF in POS 9.

5. POS 9: LOCA event (No.6) with the success of the LOCA isolation and the RCS make-up, and failures of all mitigation systems, which contributes 11 percent to the CDF in POS 9.

6. POS 9: LOOP event (No.37) with the SBO sequence, including the failure of offsite power recovery, which contributes 6 percent to the CDF in POS 9.

7. POS 9: LORH event (No.5) with the failure of the cooling via SGs, the safety injection and the charging injection, which contributes 2 percent to the CDF in POS 9.

8. POS 9: LOOP event (No.36) with SBO sequence, the success of AC power recovery and the failure of the CCW re-start and the alternate component cooling, which contributes 1 percent to the CDF in POS 9.

9. POS 9: LOOP event (No.15) with SBO sequence, the success of AAC, the AC power recovery and the CCW re-start, and the failure of the RHR operation, the cooling via SGs, the safety injection and the charging injection, which contributes 1 percent to the CDF in POS 9.

The descriptions of the top five sequences are provided in the following:

1. POS 9: LOOP event (No.6) with the success of Class 1E GTGs and the failure of mitigation systems (1.2E-09/RY)

   The CCDP of LOOP No.6 in POS 8-1 is basically used based on the same number of available GTGs. And then, this CCDP decreased by factor 0.5 is finally

used as CCDP of this sequence in POS 9, because the cooling via SGs is available in this sequence and the number of failed operator tasks is four.

In this sequence, the Class 1E GTGs successfully start and run automatically following the initiating event. Multiple random failures such as the RHR operation, the cooling via SG, the safety injection and the charging injection lead to core damage.

2. POS 9: LOOP event (No.9) with the success of Class 1E GTGs and the failure of the CCW re-start and the alternate component cooling (5.6E-10/RY).

   The CCDP of LOOP No.9 in POS 8-1 is used as the CCDP of this sequence in POS 9 based on the same number of available GTG and mitigation system.

   In this sequence, the GTGs after LOOP event are successful. Multiple random failures such as the CCWS re-start and the alternate component cooling water system lead to core damage.

3. POS 9: LOCA event (No.14) with the failure of the LOCA isolation, the safety injection and the charging injection (5.0E-10/RY)

   The CCDP of LOCA No.14 in POS 4-3 is used as CCDP of this sequence in POS 9 based on the same number of available mitigation systems because the cooling via SGs is not available in this sequence due to the failure of isolation of source of LOCA (CCDP of POS 8-1 can also be used instead of POS 4-3 because both CCDPs are almost the same).

   In this sequence, multiple random failures such as the LOCA isolation, the safety injection and the charging injection to core damage.

4. POS 9: LOCS event (No.3) with the failure of the alternate component cooling (3.8E-10/RY).

   The CCDP of LOCS No.3 in POS 8-1 is used as CCDP of this sequence in POS 9 because the number of available mitigation systems is the same as POS 8-1 (CCDP of POS 4-3 can be also used instead of POS 8-1 because both CCDPs are almost the same).

   In this sequence, the mitigation systems such as the RHR operation, the cooling via SGs fed by motor-driven EFWP, the charging injection and the safety injection system that are supported by CCWS/ESWS are not available in this initiating event. Failure of the injection by the charging pump using the alternate component cooling water system leads to core damage.

5. POS 9: LOCA event (No.6) with the success of the LOCA isolation and the RCS make-up and failures of other mitigation systems (3.6E-10/RY)

   The CCDP of LOCA No.6 in POS 4-3 is basically used (CCDP of POS 8-1 can also be used instead of POS 4-3). And then, this CCDP decreased by factor 0.5 is finally used as CCDP of this sequence in POS 9 because the cooling via SGs is available in this sequence and the number of failed operator tasks is four.

In this sequence, the LOCA isolation and the RCS make-up are successful. Multiple random failures such as the RHR operation, the cooling via SGs, the safety injection and the charging injection lead to core damage.

Dominant Sequences for POS 11

The top eight accident sequences individually contribute more than 1 percent of the CDF in POS 11. These dominant sequences are as follows:

1. POS 11: LOOP event (No.6) with the success of Class 1E GTGs and the failure of all mitigation systems, which contributes 27 percent to the CDF in POS 11.

2. POS 11: LOCS event (No.3) with the failure of the alternate component cooling, which contributes 23 percent to the CDF in POS 11.

3. POS 11: LOCA event (No.6) with the success of the LOCA isolation and the RCS make-up, and failures of all mitigation systems, which contributes 17 percent to the CDF in POS 11.

4. POS 11: LOOP event (No.9) with the success of Class 1E GTGs and the failure of the CCW re-start and the alternate component cooling, which contributes 13 percent to the CDF in POS 11.

5. POS 11: LOCA event (No.14) with the failure of the LOCA isolation, the safety injection and the charging injection, which contributes 12 percent to the CDF in POS 11.

6. POS 11: LOOP event (No.37) with the SBO sequence, including the failure of offsite power recovery, which contributes 5 percent to the CDF in POS 11.

7. POS 11: LORH event (No.5) with the failure of the cooling via SGs, the safety injection and the charging injection, which contributes 2 percent to the CDF in POS 11.

8. POS 11: LOOP event (No.36) with SBO sequence, the success of AC power recovery and the failure of the CCW re-start and the alternate component cooling, which contributes 1 percent to the CDF in POS 11.

The descriptions of the top five sequences are provided in the following:

1. POS 11: LOOP event (No.6) with the success of Class 1E GTGs and the failure of mitigation systems (4.8E-09/RY)

   The CCDP of LOOP No.6 in POS 8-1 is basically used based on the same number of available GTGs. And then, this CCDP decreased by factor 0.5 is finally used as CCDP of this sequence in POS 11, because the cooling via SG is available in this sequence and the number of failed operator tasks is four.

   In this sequence, the Class 1E GTGs successfully start and run automatically following the initiating event. Multiple random failures such as the RHR operation,

the cooling via SGs, the safety injection and the charging injection lead to core damage.

2. POS 11: LOCS event (No.3) with the failure of the alternate component cooling (4.1E-09RY).

   The CCDP of LOCS No.3 in POS 8-1 is used as CCDP of this sequence in POS 11 because the number of available mitigation systems is the same as POS 8-1 (CCDP of POS 4-3 can be also used instead of POS 8-1 because both CCDPs are almost the same).

   In this sequence, the mitigation systems such as the RHR operation, the cooling via SGs fed by motor-driven EFWP, the charging injection and the safety injection system that are supported by CCWS/ESWS are not available in this initiating event. Failure of the injection by the charging pump using the alternate component cooling water system leads to core damage.

3. POS 11: LOCA event (No.6) with the success of the LOCA isolation and the RCS make-up and failures of other mitigation systems (3.0E-09/RY)

   The CCDP of LOCA No.6 in POS 4-3 is basically used (CCDP of POS 8-1 can also be used instead of POS 4-3 because both CCDPs are almost the same). All of RHR trains are running during this POS, therefore all of RHR trains become unavailable due to the occurrence of LOCA. On the other hand, the cooling via SGs is available in this sequence. As a result, this CCDP is used as CCDP of this sequence in POS 11 because the total number of available mitigation system is the same as POS 4-3.

   In this sequence, the LOCA isolation and the RCS make-up are successful. Multiple random failures such as the cooling via SGs, the safety injection and the charging injection lead to core damage.

4. POS 11: LOOP event (No.9) with the success of Class 1E GTGs and the failure of the CCW re-start and the alternate component cooling (2.3E-09/RY).

   The CCDP of LOOP No.9 in POS 8-1 is used as the CCDP of this sequence in POS 11 based on the same number of available GTGs and mitigation systems.

   In this sequence, the GTG after LOOP event is successful. Multiple random failures such as the CCWS re-start and the alternate component cooling water system lead to core damage.

5. POS 11: LOCA event (No.14) with the failure of the LOCA isolation, the safety injection and the charging injection (2.1E-09/RY)

   The CCDP of LOCA No.14 in POS 4-3 is used as CCDP of this sequence in POS 11 based on the same number of available mitigation systems because the cooling via SG is not available in this sequence due to the failure of isolation of source of LOCA (CCDP of POS 8-1 can also be used instead of POS 4-3 because both CCDPs are almost the same).

In this sequence, multiple random failures such as the LOCA isolation, the safety injection and the charging injection to core damage.

Sensitivity studies have been performed to find additional insights for LPSD PRA results. The following are presented as sensitivity analysis:

Gas turbine generator reliability

- Case 1-1: Sensitivity to gas turbine generator failure rate

  This sensitivity study evaluates the impact of failure rate of the gas turbine generator on the CDF. For the base case study, the failure rate of the gas turbine generator is set to the failure rate of diesel generators described in NUREG/CR-6928 (Reference 19.1-16). In this sensitivity study, that failure rate is set to data of gas turbine generator described in NUREG/CR-6928.

  The sensitivity case produces a CDF of 2.0E-07/RY, which is an increase of 13 percent in the base case CDF of 1.8E-07/RY. Although a failure rate of gas turbine generator is ten times as high as one of diesel generator, it is indicated that the impact of failure rate of the gas turbine generator is small during plant shutdown conditions.

- Case 1-2: Sensitivity to gas turbine generator common cause failure

  This sensitivity analysis estimates the impact of CCF parameter for the gas turbine generator on the CDF. For the base case, the CCF parameter of the gas turbine generator is set to that of diesel generators. In the sensitivity case, CCF parameters based on the generic parameter reported in NUREG/CR-5485 (Reference 19.1-24) is applied to the US-APWR gas turbine generators.

  The estimated CDF is 1.7E-07/RY, which is a decrease of 7.2 percent from the base case. The results indicate that the impact of CCF parameter for the gas turbine generator is small during plant shutdown conditions.

Initiating Event Frequency

- Case 2-1: Sensitivity to the frequency of LOOP

  For this sensitivity case, in order to confirm how the CDF of LOOP is sensitive to total CDF, the frequency of the LOOP is set to be three times higher than the base case.

  The sensitivity case produces a CDF of 3.4E-07/RY, which is an increase of 91 percent in the base case CDF. For this reason, it is indicated that the LOOP in LPSD PRA has a small impact on total CDF.

Outage schedule

- Case 3-1: Sensitivity to the planned maintenance during the LPSD

In the base case, some components or systems are unavailable due to the planned maintenance during the LPSD. The assumption of their planned maintenance used in the base case is documented in Table 19.1-83.

This sensitivity study evaluates the impact not allowing the planned maintenance during the LPSD. In this sensitivity, unavailability due to the planned maintenance is not modeled for any component and system in the event trees. The schedule not allowing the planned maintenance for this sensitivity study is described in Table 19.1-92. This sensitivity is designed to assess the impact on the base case CDF, if some components and systems are not unavailable due to the planned maintenance.

This sensitivity case produces a CDF of 1.6E-07/RY, which is a decrease of 12 percent in the base case CDF. This result indicates that the assumption of the planned maintenance is not risk-important.

- Case 3-2: Frequency of outages

The PRA evaluates the LPSD risk from refueling outages scheduled every 24 months as a typical analysis case. Sensitivity studies were performed to evaluate the LPSD risk assuming different outage types and frequencies. The results and assumed conditions of the sensitivity cases are shown below.

Case	Shutdown frequency			LPSD CDF
	Refueling outages (Type C outage)	Forced outages with drain (Type B outage)	Forced outages without drain (Type C outage)	
Base case	0.5 /Y	-	-	1.8E-07 /RY
Case A	0.67 /Y	-	-	2.4E-07 /RY
Case B	0.5 /Y	0.5 /Y	0.29 /Y	3.3E-07 /RY
Case C	0.5 /Y	0.05 /Y	1.5 /Y	3.6E-07 /RY

The first case, case A, evaluates the LPSD risk assuming a shorter refueling outage cycle. If refueling outages are scheduled every 18 months, the shutdown frequency will be 0.67 per year and the CDF increases to 2.4E-07 /RY.

The second and third case, cases B and C, evaluates the impact of forced outages to the LPSD risk. In the sensitivity analysis, forced outages with drain are assumed to involve POS 3, POS 4-1, POS 4-2, POS 9 and POS 11. Forced outages without drain are assumed to involve only POS 3 and POS 11.

Case B assumes force outages with drain to occur with a frequency of 0.5 per year. In this case, drained maintenance is performed once per year, either by refueling outage or forced outage. This gives a conservative condition for drained

maintenance since US-APWR does not plan to perform steam generator inspection every year. The resulting CDF is 3.3E-07 /RY.

Case C assumes forced outages without drain to occur with a frequency of 1.5 per year. The total frequency of shutdown per year is approximately two in this sensitivity case. The resulting CDF is 3.6E-07 /RY.

- Case 3-3: Large RCS vent path for draindown before refueling

  The US-APWR is designed to use the pressurizer spray vent valve, which has a 3/4" diameter, as the RCS vent path for RCS draindown. If a loss of RHR were to occur in this configuration, operators could manually close the vent valve to allow decay heat removal using the SGs. This sensitivity study assumes that the pressurizer manway is removed, serving as the vent path, and remains open during a postulated loss of RHR. In this configuration, heat removal through the SGs is unavailable. The resulting CDF is 1.9E-07/RY, which is an increase of approximately 5% over the base case.

- Case 3-4: Number of available SI pumps

  In the base case, two SI pumps, which can provide RCS makeup after a loss of RHR, are in standby, in accordance with LTOP requirements. This sensitivity analysis assumes 3 or 4 SI pumps are unavailable to evaluate the impact on shutdown CDF. The resulting CDF changes are:

  (a) Three SI pumps unavailable results in a CDF=2.1E-07/RY (1.2 x base case)

  (b) Four (all) SI pumps unavailable results in a CDF=3.0E-06/RY (16.5 x base case).

Human error rate sensitivity

- Case 4-1: Sensitivity to human error probabilities set to 0.0

  This sensitivity study evaluates the impact of having perfect operators (i.e., setting all human error probabilities to 0.0 in the baseline shutdown core damage quantification).

  This sensitivity produces a CDF of 2.7E-08/RY, which is decrease of 85 percent in the base CDF. This indicates that the operator actions are risk important at the level of plant risk obtained from the base case study.

- Case 4-2: All HEPs set to mean value

  In this sensitivity analysis, mean HEPs, rather than lower bound value, are applied for human actions that will have frequent training. The resulting CDF is 7.9E-07/RY, which is 4.4 times of base case CDF.

- Case 4-3: HEP set to lower or higher value

This sensitivity analyses are performed to study uncertainty from each human error. The base case assumes that some HEPs is mean value and HEPs associated with frequent training in Table 19.1-119 have lower values. The results of sensitivity analyses assuming HEP of lower or upper value are summarized as follows:

Basic Event ID	Lower Condition		Upper Condition	
	CDF [/RY]	Ratio NOTE 2	CDF [/RY]	Ratio NOTE 2
ACWOO02SC	NA NOTE 1	NA NOTE 1	7.3E-07	4.1
ACWOO02SC-DP2				
CHIOO02RWS	NA NOTE 1	NA NOTE 1	2.5E-07	1.4
CHIOO02RWS-DP2				
CHIOO02RWS-DP3				
CHIOO02P	1.6E-07	0.9	2.3E-07	1.3
CHIOO02P+RWS	NA NOTE 1	NA NOTE 1	3.3E-07	1.8
CHIOO02P+RWS-DP2				
CHIOO02P+RWS-DP3				
CHIOO02P+RWS-DP4				
EPSOO02RDG	NA NOTE 1	NA NOTE 1	5.1E-07	2.8
HPIOO02S	NA NOTE 1	NA NOTE 1	7.5E-07	4.1
HPIOO02S-DP2				
HPIOO02S-DP3				
LLOAOO02LC	1.7E-07	0.9	2.1E-07	1.2
LOAOO02OD	1.8E-07	1.0	1.8E-07	1.0
RSSOO02LINE+P	1.6E-07	0.9	2.2E-07	1.2

Basic Event ID	Lower Condition		Upper Condition	
	CDF [/RY]	Ratio NOTE 2	CDF [/RY]	Ratio NOTE 2
HPIOO01001A	1.8E-07	1.0	1.8E-07	1.0
HPIOO01001B				
HPIOO01001C				
HPIOO01001D				
RSSOO01CSS001A				
RSSOO01CSS001B				
RSSOO01CSS001C				
RSSOO01CSS001D				
RSWOO01RWAT				
SWSOO01RWAT	1.8E-07	1.0	1.8E-07	1.0
RSSOO02P	1.4E-07	0.8	2.7E-08	1.6
RSSOO02P-DP2				
EPSOO01UATRAT	1.8E-07	1.0	1.8E-07	1.0
CHIOO01RECOV	1.8E-07	1.0	1.8E-07	1.0

Note 1: Base case assumes lower HEP.
Note 2: Ratio of the sensitivity and base cases.

For external event such as fire and flood, sensitivty analyses applying the HEPs that have impact on internal PRA to external PRA were also performed to study uncertainty from the human errors and the result are shown below.

Basic Event ID	CDF [/RY]			
	Internal	Flood	Fire	Total
ACWOO02SC	7.3E-07	1.1E-07	2.5E-08	8.6E-07
ACWOO02SC-DP2				
CHIOO02P+RWS	3.3E-07	9.5E-08	2.4E-08	4.5E-07
CHIOO02P+RWS-DP2				
CHIOO02P+RWS-DP3				
CHIOO02P+RWS-DP4				
EPSOO02RDG	5.1E-07	9.5E-08	1.0E-07	7.0E-07
HPIOO02S	7.5E-07	1.0E-07	1.4E-07	9.9E-07
HPIOO02S-DP2				
HPIOO02S-DP3				

- Case 4-4: Sensitivity to dependency of human error to CD(complete dependency)

  This sensitivity study evaluates the impact of setting dependency level of human error to CD. That is, the sensitivity case most conservatively assumes that operator actions have a complete dependency on a previously failed action.

  This sensitivity produces a CDF of 8.6E-06/RY, which is approximately 48 times of the base CDF. This indicates that assumption of dependency of human error provide significant impact to result of PRA during shutdown, and the operators play a significant role in maintaining a very low CDF during shutdown conditions.

- Case 4-5: Sensitivity to dependency of human error to ZD (zero dependency)

  This sensitivity study evaluates the impact of setting dependency level of human error to ZD. That is, the sensitivity case most non-conservatively assumes that operator actions are independent absolutely between prior mitigation system and post mitigation system.

  This sensitivity produces a CDF of 7.9E-08/RY, which is decrease of 56 percent in the base CDF. This indicates that assumption on dependency of human error provide meaningful sensitivity to result of PRA during shutdown.

- Case 4-6: Sensitivity to higher dependency of human error

This sensitivity study evaluates impact of setting higher dependency level between operator actions, which assumes that changing window on display is not effective. That is, dependency level is considered to be performed in the same location.

This sensitivity produces a CDF of 3.5E-07/RY, which is approximately 1.9 times of the base case CDF.

Duration during LPSD operation

- Case 5-1: Sensitivity to POS duration based on operational Japanese PWR plant Experience

  This sensitivity study evaluates impact of POS duration based on operational Japanese PWR plant data. This postulated POS duration is shown in Table 19.1.82.

  This sensitivity produces a CDF of 1.8E-07/RY, which is decrease of 2 percent in the base case. This indicates that the POS duration based on the Japanese data has a small impact on the shutdown risk.

Digital I&C reliability

- Case 6-1: Common cause failure of application software

  The base case assumes that application software CCF of safety system (i.e., PSMS) is 1.0E-05/demand. Since this probability has high uncertainty, sensitivity analyses concerning software CCF have been performed.

  In this sensitivity analysis, CCF probability of application software used for operator actions and all signals such as automatic isolation of low power and shutdown, excluding that of the AAC system, is common and has no diversity. Application software CCF will therefore result in failure of operator actions and all signals modeled in the PRA besides that of the AAC. Three cases listed below were considered as part of the sensitivity analysis.

  Case1: Application software CCF = 2.0E-05/demand

  If application software CCFs are assumed to occur 2.0E-05 /demand, which is twice the value considered in the base case, the resulting CDF is 1.8E-07/RY. This value is 2.2% higher than the base case CDF.

  Case 2: Application software CCF = 5.0E-05 /demand

  If application software CCFs are assumed to occur 5.0E-05 /demand, the CDF is 2.0E-07/RY, which is 9.4% higher than the base case CDF.

  Case 3: Application software CCF = 1.0E-04 /demand

If application software CCFs are assumed to occur 1.0E-04 /demand, which is ten times of the base case, the CDF is 2.2E-07RY, which is 21% higher than the base case CDF.

Results of sensitivity analyses show that if the probability of software CCF that results in failure of all safety related signals operator actions and modeled in the PRA occur with a probability of 1.0E-04 /demand, which is ten times higher than the application software CCF probability assumed in the base case, the CDF is 2.2E-07/RY. This value is approximately 1.2 times the base case CDF.

- Case 6-2: Common cause failure of basic software

  The base case assumes that basic software CCF probability is 1.0E-07/demand. Since this probability has high uncertainty, sensitivity analyses concerning basic software CCF have been performed to study the uncertainty.

  Case1: Basic software CCF = 2.0E-07 /demand

  If basic software CCFs are assumed to occur 2.0E-07/demand, which is twice the value considered in the base case, the resulting CDF is 1.8E-07/RY. This value is 0.12% higher than the base case CDF.

  Case 2: Basic software CCF = 5.0E-07 /demand

  If basic software CCFs are assumed to occur 5.0E-07/demand, the CDF is estimated to be 1.8E-07/RY, which is 1.1% higher than the base case CDF.

  Case 3: Basic software CCF = 1.0E-06 /demand

  If basic software CCFs are assumed to occur 1.0E-06/demand, the CDF is 1.9E-07/RY, which is 2.8% higher than the base case CDF.

  The above results show that if the probability of basic software CCF, which causes failure of all automatic signals and operator actions using PSMS and PCMS, occurs with ten time times probability of the base case, the resulting CDF is 1.9E-07/RY. The results is approximately 3% higher than the base case.

Importance assessment has been respectively performed in POS 4-3 and POS 8-1 because detailed analyses of CDF are limited to POS 4-3 and POS 8-1 for the LPSD PRA. These analyses have been performed to determine the following:

- Basic event importance
- Common cause failure importance
- Human error importance
- Component importance

<u>Basic event importance</u>

In this subsection, importance of basic event except initiating events is documented.

The results of basic event importance are organized by the FV importance and the RAW. The FV importance for POSs 4-3 and 8-1 that value is greater than 0.5% is shown in Table19.1-164 and Table19.1-93, respectively, and the RAW for POSs 4-3 and 8-1that value is greater than 2 is shown in Table19.1-94.

The top five most significant basic events for POSs 4-3 and 8-1, based on the FV importance, are as follows:

FV Importance for POS 4-3

HPIOO02S-DP2 (Operator fails to start standby safety injection pump under the condition of failing their previous task (HE)) – This basic event applies to conditions where operators have failed to establish decay heat removal by the RHRS. If the operator fails to start the standby safety injection pumps, RCS injection function by the safety injection system is lost. The CDF of POS 4-3 is decreased by a factor of 50% if the probability of this failure is set to 0.0.

RSSOO02P (Operator fails to start standby CS/RHR pump after LOOP (HE)) – This basic event applies to conditions where the power has recovered after LOOP initiating event. If the operator fails to restart the CS/RHR pumps, decay heat removal function by the RHRS is lost. The CDF of POS 4-3 is decreased by a factor of 33% if the probability of this failure is set to 0.0.

CHIOO02P+RWS-DP3 (Operator fails to establish charging injection (re-start charging pump and connect the RWSAT makeup line) when LOOP occurs under the condition of failing their previous two tasks (HE)) – This basic event applies to conditions where the operators have failed to establish decay heat removal by RHRS and also fails to establish RCS injection by safety injection pumps. If the operator fails to establish charging injection, RCS injection function by the charging pumps is lost. The CDF of POS 4-3 is decreased by a factor of 30% if the probability of this failure is set to 0.0.

ACRPOS4-3-F (Failure of offsite power recovery POS4-3) – This basic event applies to conditions where the offsite power recovery fails within the allowable time (1.5 hours) for core uncovery. If the offsite power fails to recover, AC power is lost. The CDF of POS 4-3 is decreased by a factor of 20% if the probability of this failure is set to 0.0.

CHIOO02RWS-DP3 (Operator fails to refill RWSAT water from RWSP under the condition of failing their previous two tasks (HE)) – This basic event applies to conditions where the operators have failed to establish decay heat removal by RHRS and also fails to establish RCS injection by safety injection pumps. RWSAT is water source for charging injection pump. If the operator fails to refill RWSAT water from RWSP, RCS injection function by the charging pumps is lost. The CDF of POS 4-3 is decreased by a factor 18% if the probability of this failure is set to 0.0.

FV importance for POS 8-1

HPIOO02S-DP2 (Operator fails to start standby SI pump under the condition of failing their previous task (HE)) – This basic event applies to conditions where operators have failed to establish decay heat removal by the RHRS. If the operator fails to start the standby safety injection pumps, RCS injection function by the safety injection system is lost. The CDF of POS 8-1 is decreased by a factor of 60% if the probability of this failure is set to 0.0.

CHIOO02P (Operator fails to start standby charging pump) – This basic event applies to conditions where the RCS inventory decreases due to LOCA and OVDR events. If the operator fails to start standby charging pump, RCS injection function by charging pump is lost. The CDF of POS 8-1 is decreased by a factor of 29% if the probability of this failure is set to 0.0.

CHIOO02P+RWS-DP3 (Operator fails to establish charging injection (start standby charging pump and connect the RWSAT makeup line) under the condition of failing their previous two tasks (HE)) – This basic event applies to conditions where the operators have failed to establish decay heat removal by RHRS and also fails to establish RCS injection by safety injection pumps. If the operator fails to establish charging injection, RCS injection function by the charging pump is lost. The CDF of POS 8-1 is decreased by a factor of 23% if the probability of this failure is set to 0.0.

RSSOO02P (Operator fails to start standby CS/RHR pump (HE)) – This basic event applies to conditions where the power supply has recovered after LOOP initiating event. If the operator fails to restart the CS/RHR pumps, decay heat removal function by the RHRS is lost. The CDF of POS 8-1 is decreased by a factor of 20% if the probability of this failure is set to 0.0.

ACRPOS8-1-F (Failure of offsite power recovery POS8-1) – This basic event applies to conditions where the offsite power recovery fails within the allowable time (4 hours) before core uncovery. If the offsite power fails to recovery, AC power is lost. The CDF of POS 8-1 is decreased by a factor of 12% if the probability of this failure is set to 0.0.

The top five most significant basic events for POS 4-3 and POS 8-1, based on the RAW, are as follows:

RAW for POS 4-3

RTPBTSWCCF (CCF of basic software) – The CDF of POS 4-3 would increase approximately 2.5E+04 times if the probability of this failure were set to 1.0. If this failure occurs, all of digital I&C software will be inoperable and result in failure of automatic signals and manual actions which need the digital I&C software.

EPSCF4CBSO52STH-ALL (CCF of Breaker between Class 1E 6.9 kV Switchgear and 6.9kV-480V Transformer A, B, C and D Spurious Open) – The CDF of POS 4-3 would increase approximately 1.4E+04 times if the probability of this failure were set to 1.0. If this failure occurs, the power supply from all Class 1E 480V load centers will be lost. This basic event leads to the total loss of power supply to the motor-operated valve which is necessary for the mitigation of shutdown accident.

EPSCF4CBSO52STL-ALL (CCF of Breaker between 6.9 kV-480V Transformer and Class 1E 480V Load Center A, B, C and D Spurious Open) – The CDF of POS 4-3 would increase approximately 1.4E+04 times if the probability of this failure were set to 1.0. If this failure occurs, the power supply from all Class 1E 480V load centers will be lost. This basic event leads to the total loss of power supply to the motor-operated valve which is necessary for the mitigation of shutdown accident.

EPSCF4CBSO52LC-ALL (CCF of Breaker between Class 1E 480V Load Center and Class 1E 480V Motor Control Center A, B, C and D Spurious Open) – The CDF of POS 4-3 would increase approximately 1.4E+04 times if the probability of this failure were set to 1.0. If this failure occurs, the power supply from all Class 1E 480V motor control centers will be lost. This basic event leads to the total loss of power supply to the motor-operated valve which is necessary for the mitigation of shutdown accident.

SWSCF4PMYR001-ALL (CCF of Essential Service Water Pumps A, B, C and D to run) – The CDF of POS 4-3 would increase approximately 1.4E+04 times if the probability of this failure were set to 1.0. If this failure occurs, all trains of essential service water will be lost. This basic event leads to the total loss of component cooling water.

RAW for POS 8-1

RTPBTSWCCF (CCF of Basic Software) – The CDF of POS 8-1 would increase approximately 2.9E+04 times if the probability of this failure were set to 1.0. If this failure occurs, all of digital I&C software will be inoperable and result in failure of automatic signals and manual actions which need the digital I&C software.

SWSCF3PMYR001-ALL (CCF of Essential Service Water Pumps A, B and C to run) – The CDF of POS 8-1 would increase approximately 1.1E+04 times if the probability of this failure were set to 1.0. If this failure occurs, all operable trains of essential service water will be lost. This basic event leads to the total loss of component cooling water.

CWSCF3PCYR001-ALL (CCF of CCW Pump A, B and C to Run) – The CDF of POS 8-1 would increase approximately 1.1E+04 times if the probability of this failure were set to 1.0. If this failure occurs, all operable trains of CCW will be lost. This basic event leads to the total loss of CCW.

CWSCF3RHPF001-ALL (CCF of CCW Heat Exchanger A, B and C Plug) – The CDF of POS 8-1 would increase approximately 1.1E+04 times if the probability of this failure were set to 1.0. If this failure occurs, all operable trains of CCW will be lost. This basic event leads to the total loss of CCW.

EPSCF4CBSO52STH-ALL (CCF of Breaker between Class 1E 6.9 kV Switchgear and 6.9kV-480V Transformer A, B, C and D Spurious Open) – The CDF of POS 8-1 would increase approximately 8.3E+03 times if the probability of this failure were set to 1.0. If this failure occurs, the power supply from all Class 1E 480V load centers will be lost. This basic event leads to the total loss of power supply to the motor-operated valve which is necessary for the mitigation of shutdown accident.

Common-cause importance

It is useful to separate above basic event importance into several groups of basic events (i.e., hardware events and human error), in order to review the most important within each group.

In this subsection, importance of common cause basic events is documented.

The top 10 FV importance of CCF basic events for POSs 4-3 and 8-1 are shown in Table 19.1-166 and Table 19.1-95, respectively, and the top 10 RAW for CCF basic events for the POSs are shown in Table 19.1-167 and Table 19.1-96, respectively.

The most significant CCF basic events for POSs 4-3 and 8-1 based on FV importance are **EPSCF4DLLRDG-ALL** and **EPSCF3DLLRDG-ALL**, respectively. These basic events represent CCF of all available Class 1E GTGs to run (The number of available GTGs is different in each POS.). The basic events have FV importance of 1.0E-01 and 6.7E-02, respectively.

The top ten most significant CCF basic events for POSs 4-3 and 8-1 based on the RAW are the same as the basic events ranked in top ten most significant basic events based on RAW.

Human error importance

In this subsection, “operator actions” basic event are documented.

The top ten FV importance of human error basic events for POSs 4-3 and 8-1 are shown in Table 19.1-168 and Table 19.1-97, respectively, and the top ten RAW are shown in Table 19.1-169 and Table 19.1-98, respectively.

The most significant human error basic event for POSs 4-3 and 8-1 based on FV importance is **HPIOO02S-DP2 (Operator fails to start standby SI pump under the condition of failing their previous task (HE))**, with a FV importance of 5.0E-01 and 6.0E-01, respectively.

The most significant human error basic event for POS 4-3 based on RAW is **RSSOO02P (Operator fails to start standby CS/RHR pump(HE))**, with a RAW of 1.3E+02. The CDF of POS 4-3 would increase approximately 130 times, if the probability of this failure were set to 1.0. The most significant human error basic event for POS 8-1 based on RAW is **CHIOO02P (Operator fails to start standby Charging pump (HE))**, with a RAW of 1.1E+02. The CDF of POS 8-1 would increase approximately 110 times, if the probability of this failure were set to 1.0. This is due to conservative assumption for the charging pump condition. During POS 8-1, it is assumed that there is a period for the charging pump standby condition.

Component importance

In this subsection, component (single failure of hardware) importance is documented.

The top ten FV importance of component basic events for POSs 4-3 and 8-1 are shown in Table 19.1-170 and Table 19.1-99, respectively, and the top ten RAW basic

events for POSs 4-3 and 8-1 are shown in Table 19.1-171 and Table 19.1-100, respectively.

For POS 4-3, there are only two single failure basic events that have a FV importance greater than 1.0E-02. The most significant single failure basic event based on FV importance is **CVCAVCD024B and CVCAVCD024C**, which represent the failure of air-operated valve on low-pressure letdown line to close, with a FV importance of 4.9E-02. For POS 8-1, there are only four single failure basic events that have a FV importance greater than 1.0E-02. The most significant single failure basic event based on FV importance is **EPSDLLRAACA**, which represent the failure of AAC in A train to run, with a FV importance of 3.9E-02.

For POS 4-3, there are more than 22 basic events that have a RAW which value is approximately 2.3E+03. These are basic events that represent large external leak from components and piping. For POS 8-1, there are more than 45 basic events that have a RAW which value is approximately 3.0E+02. These are basic events that represent large external leak from components and piping.

US-APWR Unique Design Importance

In this subsection, component importance for US-APWR unique design, i.e., the automatic isolation of low pressure letdown, is documented.

The automatic isolation of low pressure letdown is an effective function to reduce risk caused by initiating event FLML or OVDR likely to occur during mid-loop operation of POSs 4 and 8. The isolation system consist of RCS low-level signal and air-operated isolation valves (RHS-AOV-024B and C). The following is estimated RAW for each component associated with the automatic isolation. The RAW is applicable to that for failure of RCS low-level signal or air-operated isolation valve to close.

POS	CDF [/RY]		Ratio (=RAW) Note 2
	Base	Sensitivity	
3 Note 1	1.3E-08	1.3E-08	1.0
4-1	1.3E-08	1.4E-07	10.3
4-2	5.3E-09	1.3E-07	24.8
4-3	3.0E-08	1.2E-06	41.6
8-1	8.0E-08	4.1E-07	5.1
8-2	5.6E-09	1.3E-07	23.4
8-3	1.1E-08	1.7E-07	16.5
9 Note 1	3.4E-09	3.4E-09	1.0
11 Note 1	1.8E-08	1.8E-08	1.0
TOTAL	1.8E-07	2.3E-06	12.6

Note 1: Automatic isolation of low pressure letdown is an effective function to reduce risk caused by FLML or OVDR likely to occur during mid-loop operation of POSs 4 and 8.

Note 2: RAW for failure of RCS loop low-level signal and of air-operated isolation valve to close is equal to the ratio.

The important SSCs and operator actions of other POSs are qualitatively extracted based on the mitigation system that is available for each POS and the importance results of POSs 4-3 and 8-1. SSCs and operator actions that have been identified to be risk important in POSs 4-3 and 8-1 were considered to be risk important in other POSs. SSCs and operator actions that have been credited in other POSs but not in POSs 4-3 and 8-1 were also considered to be risk important. Important operator actions of POSs 4-3 and 8-1 and other POSs are shown in Tables 19.1-101 through 19.1-109. Important SSCs of POSs 4-3 and 8-1 and other POSs are shown in Table 19.1-110 to Table 19.1-118. These results are used as the input to the reliability assurance program and human factor engineering. Quantification results of POSs 4-3 and 8-1 have been considered applicable to identify SSCs (and operator actions) that are important to the overall LPSD risk for the reasons described below.

- The contributions of POSs 4-3 and 8-1 to the total CDF are larger than those of other POSs. SSCs that are important for these POSs are also important for the total LPSD risk.
- Loss of offsite power (LOOP) and LOCA initiating events have large contribution to the total CDF. Loss of RHR due to over-drain (OVDR) and caused by failing to maintain water level (FLML) has small impact on total CDF. This tendency is the same in each POS. This implies that the risk profile is similar for all POSs.
- POSs 4-3 and 8-1 have the least number of mitigation functions in all POSs. POSs other than POSs 4-3 and 8-1 have additional mitigation functions that are not available during POSs 4-3 and 8-1 (e.g. RCS cooling by SGs and gravity injection). Since number of mitigation functions credited in POSs other than POSs 4-3 and 8-1 is equal or more than that of POSs 4-3 and 8-1, the risk importance of SSCs quantified for POSs 4-3 and 8-1 will have lower or similar values in other POSs. It is unlikely that SSCs that are below the quantitative thresholds in POSs 4-3 and 8-1 will become risk important in other POSs.
- SSCs that are used for mitigation systems not credited in POSs 4-3 and 8-1 (i.e., decay heat removal via SGs and gravity injection) may be risk important if all POSs were quantified together. SSCs of mitigation functions unique to other POS are all included in the list of risk important SSCs to assure that the list includes all risk important SSCs.

The uncertainties of the CDF for POSs 4-3 and 8-1 have been calculated and are summarized in Figure 19.1-21. The mean value, median, 5th percentile and 95th percentile of the distribution are calculated. The error factor (EF) is estimated by the square root of the ratio of the 95th percentile to the 5th percentile.

	POS 4-3	POS 8-1
Upper	8.3E-08/RY	2.3E-07/RY
Mean	2.9E-08/RY	8.1E-08/RY

Medium	1.8E-08/RY	4.8E-08/RY
Lower	4.4E-09/RY	1.3E-08/RY
EF	4.3	4.2
(Point Estimate)	3.0E-08/RY	8.0E-08/RY

The uncertainty range for POS 4-3 CDF is found to be 4.4E-09/RY to 8.3E-08/RY for the 5% to 95% interval. This indicates that there is 95% confidence that the POS 4-3 CDF is no greater than 8.3E-08/RY. The EF for the POS 4-3 CDF is 4.3. The point estimate CDF for POS 4-3 is 3.0E-08/RY.

The uncertainty range for the POS 8-1 CDF is found to be 1.3E-08/RY to 2.3E-07/RY for the 5% to 95% interval. This indicates that there is 95% confidence that the POS 8-1 CDF is no greater than 2.3E-07/RY. The EF for the POS 8-1 CDF is 4.2. The point estimate CDF for POS 8-1 is 8.0E-08/RY.

The estimation of uncertainty in the analysis from human error is discussed in sensitivity analysis Case 4-3. The ratio of the upper HEP values to lower HEP values are less than 5.0.

US-APWR PRA uses various assumptions for the unreliability of unique designs such as the GTG, digital I&C system, equipment configurations, duration of plant shutdown, operator action to prevent or mitigate initiating events including their probabilities. While the assumptions are decidedly conservative, they may have large uncertainty resulting in large impact on LPSD risk.

Table 19.1-181 lists the key sources of uncertainty that may have impact on the PRA results and types or uncertainty. The assessed areas of uncertainty are categorized into three types: one is parametric uncertainty associated with parametric values, second is completeness uncertainty regarding the possibility of unaccounted for initiating events, and the other is modelling uncertainty made in developing the PRA model. Uncertainty analysis and sensitivity analyses are summarized in Table 19.1-181 to discuss the contribution to the LPSD risk.

In the LPSD Level 2 PRA, the release probability under the condition that core damage occurs is assumed to be 1.0. Therefore, the LRF, which equals the CDF, is 1.8E-07/RY.

The release categories for the LPSD operation are evaluated as follows:

- Filled RCS state: 3.5E-08/RY
- Mid-loop Operation State: 1.4E-07/RY

Source terms for LPSD operations are evaluated by employing MAAP 4.0.6 code. POS3 is defined as an operating state that RCS is fully filled with water in low-power condition. This POS is selected as one of the representative states for the source term evaluation in low-power and shutdown conditions when the containment is initially closed. Fission product is released after containment failure as a consequence of an accident. POS4 is

defined as an operating state that plant is in mid-loop operation. This POS is selected as one of the representative states for the source term evaluation in low-power and shutdown conditions when the containment is not completely closed. It is assumed that the containment is initially opened and it is expected manually closed when the accident occurs although the isolation is considered not complete because of the temporary closure. The leakage of containment is assumed to be 100%/day at the design pressure.

- Filled RCS state: LOCA due to failure of RHR line valve + SIS and CSS unavailable
- Mid-loop Operation State: Loss of RHR + SIS and CSS unavailable + Containment isolation partially success with 100%/day leak at the design pressure

The analysis result for each release category is summarized in Table 19.1-179.

19.1.6.3 Other Risk of the Low-Power and Shutdown Operations PRA

Risk of other external events at LPSD has been discussed under several conservative assumptions.

19.1.6.3.1 Seismic at LPSD

The initiating events that are modeled in the internal event LPSD PRA of Subsection 19.1.6.1 are considerable for seismic during LPSD. According to the event trees defined by the internal event LPSD PRA, it is possible to prevent core damage if any one of mitigation systems and support systems is available. Table 19.1-120 describes the initiating events and available mitigation systems for seismic event during LPSD. For seismic, it is assumed that the SSCs of non Seismic Category I are not available. Only operator actions in the main control room to start-up a standby mitigation system to prevent core damage is expected in the LPSD seismic PRA.

For seismic consideration, SSCs for LPSD has been involved in Subsection 19.1.5.1 “Seismic Risk Evaluation” and confirmed that the HCLPFs are greater than or equal to RLE.

On the min-max approach, plant level HCLPF is evaluated considering HCLPFs of initiating events and HCLPFs of event sequences. For the LPSD Seismic SMA, a simplified assumption is made which is that any initiating event will occur as a result of a seismic event. As shown in Table 19.1-120, if the safety injection (SI) system is available, it does not result in core damage for all POSs and initiating events during LPSD. The dominant seismic cutsets for the SI system are as follows:

No. Seismic Cutsets (Description) :HCLPF

1. SE-EPSDLFFGTABCD (Class 1E Gas Turbine Generators GTA, B, C, D) : 0.50g
2. SE-HPIPMFF001ABCD (Safety Injection Pumps SIPA, B, C, D) : 0.62g
3. SE-EPSEPFFBCPABCD (Battery Charger BCP-A, B, C, D) : 0.75g

4. SE-EPSEPFFIBDABCD (Class 1E AC120V Panelboards IBD-A, B, C, D) : 0.75g

5. SE-EPSIVFFIBCABCD (Class 1E UPS Units IBC-A, B, C, D) : 0.75g

Using the min-max method, the HCLPF for SI system is 0.50g.

Key random failures/human errors during LPSD are reviewed. For POS 8-1 and the initiating event LORH, only the SI system is expected to be functional after a seismic event, as noted in Figure 19.1-22.

Dominant random failures/human errors that lead to SI system failure are as follows:

No.	Dominant random failures/human errors (Description)	:Prob.
1.	HPIOO02S (Operators fail to start standby SI pumps)	:4.9E-3
2.	EPSCF3DLLRGTG-ALL (GTG A,B,C fail to load and run after 1hr operation(CCF)*) (*: GTG-D is out of service during POS 8-1) (The human error for opening the SDV during the RCS closed states)	:1.1E-3

The dominant mixed cutsets are the combinations of seismic failures of non Seismic Category I SSCs and random failures/human errors.

Opening the pressurizer depressurization valve (SDV) in conjunction with SI system operation will be needed for POSs where the RCS is closed, such as POS 3. The need for opening the SDV will not affect the sequence HCLPF since the HCLPF of the SDV is 0.8g, which is greater than the HCLPF for the SI system. Also during the RCS closed states, decay heat removal by SG reflux cooling is also available prior to the SI system operation. The practical mixed cutsets will be the combination of failures of SI system and failures of SG reflux cooling. The HCLPF of the SG is 0.67g, which is greater than 0.5g.

SSCs for LPSD mitigation systems are involved in the list of SSCs for at-power SMA and the HCLPFs of the SSCs are not less than 0.5g.

Only during the case of loss of offsite power or loss of CCW events by a seismic event will mitigation systems possibly be unavailable. However, HCLPFs of Class 1E gas turbine generators (GTGs) and the CCWS are also greater than the SI system HCLPF of 0.5g.

Therefore, plant level HCLPF for LPSD will not be less than RLE.

19.1.6.3.2 Internal Fire at LPSD

The scope of the internal fire PRA for LPSD at design certification phase focused on mid-loop operations since during these states the plant would be most vulnerable fire such as maintenance-induced fire. POS 8-1(mid-loop operation) is risk significant for the internal event LPSD PRA. For internal fires, risk significant POS 8-1 and POS 4-3 of LPSD are estimated with the same methodology at power though the transient fire due to welding and cutting works and access for maintenance works have been specially reflected. The

primary focus of the fire scenario development is the potential of fire damage to Yard transformers, RHRS, CVCS and its support system. Possible initiating events by internal fire at LPSD are as follows:

- LOCA
- FLML
- OVDR (Loss of RHR due to over drain)
- LOOP

Standby states of mitigation systems for those initiators are shown in Table 19.1-83. The states of out of services of POS 8-1 are similar to other POSs so that there are not more severe other POSs than POS 8-1 related to conditions of available mitigation systems. Therefore, the analysis of other POS except POS 4-3 is based on that of POS 8-1.

LOCA and LOOP initiating events are potentially significant for all POSs. On the other hand, OVDR and FLML are initiating events only considered in POSs representing mid-loop operation. Accordingly, LOCA and LOOP are significant in POSs where the RCS is full, while for POS of mid-loop operation, OVDR and/or FLML are significant event other than LOCA and LOOP. In internal fire PRA for at-power operation, fire in the compartments (e.g. switchyard) that cause LOOP are significant fire scenarios. Similar events are considerably significant during low power and shutdown (Internal events).

The fire-induced pathways and the method for isolating them against LOCA, OVDR and FLML are as below.

(1) The fire-induced pathways of LOCA and the method for isolation

The pathways and the method for isolation are as follows.

a. Spurious open of a safety depressurization valve (SDV)

RCS operating conditions in POS 3 and 11 are under high pressure and high temperature. Therefore, the spurious open of a safety depressurization valve (SDV) due to fire will result in LOCA.

In this case, the isolation of LOCA pathway could be accomplished by closing the SDV isolation valve by operator manual action.

b. Flow diversion of reactor coolant to a holdup tank (spurious open of CVS-LCV-031A)

In all POSs except POS 4-1 and 8-1, pathway of three-way valve “CVS-LCV-031A” is opened to VCT. If fire would cause the failure of three way valve function to switch-over the flow pathway to holdup tank, reactor coolant will be fed to holdup tank and RCS water level will decrease to the lower level than the mid-loop water level. This event was considered as LOCA.

In this case, the isolation of LOCA pathway could be accomplished by automatic closing of RHS-AOV-024B and C.

The following LOCA will not be caused by the impact of fire.

a. Spurious open of SDV during the POSs except POS 3 and 11

In the POSs except POS 3 and 11, pressure and temperature are maintained at atmospheric pressure and 140°F respectively. Therefore, even if a SDV might open spuriously due to fire, reactor coolant will not flow out from RCS.

b. Flow diversion of reactor coolant to a holdup tank during the POSs except POS 3, 9 and 11

LOCA due to reactor coolant flow diversion to holdup tank is identified and evaluated as an initiating event in all POSs except POS 4-1 and 8-1. In POS 4-1 and 8-1, OVDR is identified and evaluated as an initiating event.

c. RCP seal LOCA

In POS 3 and 11, seal injection flow or cooling water to RCP thermal barriers is required in order to ensure the RCP normal running. If both functions of seal injection and thermal barrier cooling will be failed concurrently by a fire, RCP seal LOCA will be occurred. However, US-APWR fire protection design prevents to cause such fire induced damage scenario.

d. LOCA caused by spurious open of RHS-MOV-025A (B, C, D)

LOCA scenario caused by spurious open of RHS-MOV-025A (B, C, D) due to human errors is included in Internal Event PRA model. However, such scenario by the spurious open of valves is not considered in the fire PRA. The reason that such scenario is not possible due to the fire is as follows.

- It is expected that spurious opening of RHS-MOV-025 A (B, C, D) will not occur even if the control circuit of these valves might be damaged by fire. This is because the spurious opening of these valves will be prevented administratively by the key-locked control of control circuit at MCC (Motor Control Center).

- Inter-cable hot shorts of the power cables which run from MCC to the location of RHS-MOV-025A (B, C, D) will be prevented by installing each cable in independent metal conduit. Therefore, spurious opening of RHS-MOV-025A (B, C, D) due to the inter-cable hot short of three-phase power supply will not occur.

(2) The fire-induced pathways of OVDR and the method for isolation

The fire-induced pathways and the method for isolation are as follows.

a. Spurious open of CVS-PCV-104

In POS 4-1, and 8-1, the letdown flow rate will increase if fire causes spurious open of the flow control valve “CVS-PCV-104” on the letdown line. In this case, RCS water level will decrease to lower level than mid-loop water level. This results in OVDR.

b. Failure of changing the flow pathway by the valve "CVS-LCV-031A"

In POS 4-1 and 8-1, pathway of three-way valve “CVS-LCV-031A” is opened to holdup tank. If fire would cause the failure of three way valve function to switch-over the flow pathway to VCT, reactor coolant will continue to be fed to holdup tank and RCS water level will decrease to the lower level than the mid-loop water level. This results in OVDR.

In both cases, the isolation of OVDR pathway could be accomplished by automatic closing of RHS-AOV-024B and C.

(3) The cause of FLML and the method for isolation

The causes of FLML are the increase of letdown flow or loss of charging flow. Details of causes of FLML and method for isolation are as follows.

a. Increase of letdown flow

- Spurious control of CVS-PCV-104

In POS 4-2, 4-3, 8-2 and 8-3, the letdown flow will increase if fire causes spurious open of the flow control valve “CVS-PCV-104” on the letdown line. In this case, RCS water level will decrease to lower level than mid-loop water level. This results in FLML.

b. Loss of charging flow

- Spurious close of CVS-LCV-031B or CVS-LCV-031C

In POS 4-2, 4-3, 8-2 and 8-3, water flow to supply to charging pumps will be lost if either valve of CVS-LCV-031B or CVS-LCV-031C installed on volume control tank outlet is closed spuriously due to the fire. Also the injection flow to RCS will be lost. In this case, RCS water level will decrease to lower level than mid-loop water level. This results in FLML.

- Spurious trip of a charging pump

In POS 4-2, 4-3, 8-2 and 8-3, injection flow to RCS will be lost if the fire causes the trip of charging pump spuriously. In this case, RCS water level will decrease to lower level than mid-loop water level. This results in FLML.

- Spurious closing of MOV/AOV on charging line

In POS 4-2, 4-3, 8-2 and 8-3, injection flow to RCS will be lost if fire causes the closure of MOV or AOV on charging line spuriously. In this case, RCS water level will decrease to lower level than mid-loop water level. This results in FLML.

In these cases, the isolation of FLML pathway could be accomplished by automatic closing of RHS-AOV-024B and C.

Fire risk at LPSD has been evaluated following conservative assumptions.

- In low power and shutdown period, fire door provided to the opening between the fire origin compartment and the adjacent fire compartment in which some maintenance works are held are assumed to be left open.
- The impacts to LPSD mitigation systems are assumed the worst scenario.

The result of CDF of POS 8-1 is 7.2E-09/RY. The uncertainty range for the POS 8-1 is 1.1E-09 – 2.1E-08/RY for the 5% to 95% interval. The result of CDF of POS 4-3 is 2.3E-09/RY.

CDFs of other POSs for internal fire at LPSD are estimated based on the model of POS 8-1. Table 19.1-121 lists the CDF of each POS. The total CDF of internal fire at LPSD is 1.8E-08/RY. CDFs of other POSs by bounding analysis are lower than CDF of POS 8-1.

The dominant scenarios, dominant cutsets and basic event importance (FV importance and RAW) for the internal fire at LPSD (POS 8-1) are shown in Table 19.1-122, Table 19.1-123, Table 19.1-124 and Table 19.1-125, respectively. Risk by internal fire at shutdown has been very small in spite of conservative assumptions.

19.1.6.3.3 Internal Flood at LPSD

The scope of the internal flood PRA for LPSD at design certification phase focused on mid-loop operations since during these states the plant would be most vulnerable to flooding such as maintenance-induced flooding. POS 8-1 (mid-loop operation) is risk significant for the internal event LPSD PRA. For internal flooding, risk significant POS 8-1 and POS 4-3 of LPSD are estimated with the same methodology at power. The primary focus of the flood scenario development is the potential of flood damage to the RHR system and its support systems. Possible initiating events by internal flood at LPSD are as follows.

- LOCA (Flood at CVCS letdown line)
- Loss of RHR (Flood at CS/RHRS)
- Loss of CCWS/ESWS (Flood at CCWS/ESWS)

Standby states of mitigation systems for those initiators are shown in Table 19.1-83. The states of out of services of POS 8-1 are similar to other POSs so that there are not more severe other POSs than POS 8-1 related to conditions of available mitigation systems. Therefore POS 8-1 is selected for internal flood at LPSD PRA.

Loss of CCW/ESW initiating event is significant for all POSs during low power and shutdown. As can be seen by at-power operation internal flooding PRA, the probability of consequential loss of CCW/ESW event caused by flooding is much higher than loss of other functions. In POSs where redundancy of CCW/ESW is degraded, the conditional core damage probability will increase. These features are common to all POSs and accordingly, loss of CCW/ESW is considered to be a significant initiating event.

The qualitative and quantitative steps of internal flood PRA as described in subsection 19.1.5.3 is also applied to the low power and shutdown modes.

The frequencies of internal flooding at power are also applied to the frequencies at LPSD. This assumption may be more conservative because the pressure conditions of LPSD operation are low and it may be expected that the possibility of rupture of pipe will be less.

During shutdown operations, temporary piping pressure boundaries and operator errors during maintenance may be possible initiators of internal flooding. However, the internal flood by the effect of those temporary isolation valves, such as freeze seals, are not considered from the potential initiators because the isolation valves are installed considering maintenance and CCWS has been separated individual trains.

Also flood risk at LPSD has been evaluated following conservative assumptions.

- Assumed most risk dominant POS: POS 4-3 (36 hours) POS 8-1 (60 hours).
- Initiating event frequencies for LPSD flood initiating events are assumed as the total flood frequencies of each flood mode (spray, flood, and major flood) at power.
- The impacts to LPSD mitigation systems are estimated assuming the most severe scenario (boundary conditions of event trees).
- The flood barriers that separated the reactor building between the east side and the west are effective.

The CDF of the flooding risk at POS 8-1 of LPSD is 2.9E-08/RY. The uncertainty range for the POS 8-1 is 1.2E-10/RY to 1.1E-07/RY for the 5% to 95% interval. The result of CDF of POS 4-3 is 2.4E-10/RY.

CDFs of other POSs for internal flood at LPSD are estimated based on the model of POS 8-1. Table 19.1-126 lists the CDF of each POS. The total CDF of internal flood at LPSD is 9.5E-08/RY.

The dominant scenarios, dominant cutsets and basic event importance (FV importance and RAW) for the internal flood at LPSD (POS 8-1) are shown in Table 19.1-127, Table 19.1-128, Table 19.1-129 and Table 19.1-130. Important SSCs for internal flood at LPSD are RHR, CCWS and supporting power supply systems. Risk from internal flood at LPSD is very small though it has been estimated using conservative assumptions.

19.1.7 PRA-Related Input to Other Programs and Processes

The following subsections describe PRA-related input to various programs and processes.

19.1.7.1 PRA Input to Design Programs and Processes

The US-APWR PRA is an integral part of the design process and has been used to optimize the plant design with respect to safety. The PRA models and results have influenced the selection of design alternatives such as four train core cooling systems, an in-containment RWSP, full digital I&C systems.

The US-APWR is expected to perform better than current operating plants in the area of severe accident safety performance since prevention and mitigation of severe accidents, as shown in Table 19.1-1, have been addressed during the design stage, taking advantage of PRA results and severe accident analysis. The PRA results indicate that the US-APWR design results in a low level of risk and meets the CDF, LRF, and containment performance goals for new generation PWRs. Key insights and assumptions are summarized in Table 19.1-119.

The PRA has been used to evaluate the contribution to plant risk from inadequate containment pressure with regards to crediting containment accident pressure in determining available NPSH. In the evaluation of available NPSH of safety injection pumps and CS/RHR pumps it has been assumed that the containment pressure is equal to the RWSP fluid vapor pressure for high sump fluid temperatures (vapor pressure greater than initial containment atmospheric pressure). Events which could reduce containment accident pressure (e.g., impaired containment integrity or operation of heat removal systems at too high a rate) would also accordingly reduce the RWSP fluid temperature, such that the containment accident pressure still bounds the RWSP fluid vapor pressure. However, a rapid depressurization of containment during these periods of high RWSP temperature could potentially cause a loss of sufficient NPSH margin (e.g., due to flashing). An evaluation of the contribution to plant risk from inadequate containment pressure during periods of high sump temperatures during post accident conditions has been performed for all hazard groups. The evaluated core damage risk from inadequate containment pressure is two orders of magnitude lower than the core damage frequency. The contribution to plant risk from inadequate containment pressure was therefore considered negligible.

19.1.7.2 PRA Input to the Maintenance Rule Implementation

PRA input is provided as required to develop the Maintenance Rule, discussed in Chapter 17 Section 17.6.

19.1.7.3 PRA Input to the Reactor Oversight Process

Ultimately, the site-specific PRA models and results in the COLA phase will be utilized to support elements of the reactor oversight process including the mitigating systems performance index and the significance determination process.

19.1.7.4 PRA Input to the Reliability Assurance Program

Risk significant SSCs are identified for the RAP (Chapter 17, Section 17.4). Key risk significant SSCs are organized by a FV importance greater than 0.005 and RAW greater than 2 in accordance with Reference 19.1-42. These thresholds are consistent with Reference 19.1-43. In addition to internal event PRA, risk significant information based on

LPSD PRA and external event PRA, SSCs related Initiating events, and key assumptions are identified. PRA input is provided as required to develop the reliability assurance program (RAP), discussed in Chapter 17 Section 17.4.

19.1.7.5 PRA Input to the Regulatory Treatment of Non-Safety-Related Systems Program

PRA information for the RAP includes non-safety risk significant SSCs.

19.1.7.6 PRA Input to the Technical Specification

At the design stage, PRA results have been used as input in the development of US-APWR Technical Specifications (Chapter 16). PRA insights are utilized to develop risk-managed technical specifications (RMTS) and surveillance frequency control program (SFCP).

At operation stage, PRA is used to implement RMTS and SFCP. The RMTS relies on configuration risk management program (CRMP) which is described in 5.5.18 of US-APWR Technical Specifications described in Chapter 16. The requirement of RMTS is described in NEI 06-09 (Reference 19.1-11). Section 2 of the NEI 06-09 guideline describes requirements for the program including adequacy of the PRA. Concerning the SFPC, NEI 04-10 (Reference 19.1-44) provides the guidance to establish licensee control of surveillance test frequencies for the majority of Technical Specifications surveillances. Section 4 of the NEI 04-10 describes the detailed SFCP process including adequacy of the PRA.

In the RMTS, the PRA will be used to calculate risk management action time (RMAT) and risk-informed completion time (RICT). The calculations are performed in accordance with the NEI guideline including, but not limited to following rules:

- RMAT and RICT risk levels are referenced to CDF and LERF associated with the plant “zero maintenance” configuration,
- Compensatory risk management actions may only be credited in the calculations to the extent they are modeled in the PRA and are proceduralized,
- The probability of repair of inoperable SSCs within the scope of the CRMP cannot be credited in the RMAT and RICT program,
- The impact of fire risks shall be included in RMAT and RICT calculations.

In the SFCP, the PRA will be used to determine the risk impact of the surveillance test frequencies.

PRA for the design phase satisfies the requirements specified in the NEI 06-09 and 04-10 that are associated with PRA technical adequacy, such as scope of PRA, level of detail to provide plant configuration specific impacts and operating modes. However, technical elements that require site specific information are not implemented in the design phase PRA.

The COL Applicant is responsible for preparation of a PRA model to meet the technical adequacy requirement of NEI 06-09 and 04-10.

19.1.8 Conclusions and Findings

The US-APWR PRA, as demonstrated through the preceding subsections, has been used to achieve the following:

- To identify and address potential design and operational vulnerabilities (i.e., failures or combinations of failures that are significant risk contributors that could drive the risk to unacceptable levels with respect to NRC goals: Subsection 19.1.4, 19.1.5, 19.1.6
- To reduce or eliminate known weaknesses of existing operating plants that are applicable to the new design, by introducing appropriate features and requirements: Subsection 19.1.3
- To select among alternative features, operational strategies, and design options: Subsection 19.1.3
- To develop an in-depth understanding of the design's robustness and tolerance of severe accidents initiated by either internal or external events: Subsections 19.1.4, 19.1.5, 19.1.6
- To examine the risk-significance of specific human errors associated with the design, and characterize the significant human errors in preparation for better training and more refined procedures: Subsections 19.1.4, 19.1.5, 19.1.6
- To determine how the risk associated with the design compares against the NRC goals of less than 1E-4/year for core damage frequency (CDF) and less than 1E-6/year for large release frequency (LRF): Subsections 19.1.4, 19.1.5, 19.1.6
- To determine containment performance against the NRC containment performance goal, which includes a deterministic goal that containment integrity be maintained for approximately 24 hours following the onset of core damage for the more likely severe accident challenges and a probabilistic goal that the conditional containment failure probability (CCFP) be less than approximately 0.1 for the composite of core damage sequences assessed in the PRA: Section 19.2
- To assess the balance of preventive and mitigate features of the design, including consistency with guidance in SECY-93-087 (Reference 19.1-45) and the associated staff requirements memoranda: Section 19.2
- To demonstrate that the plant design represents a reduction in risk compared to existing operating plants: Subsection 19.1.3
- To demonstrate that the design addresses known issues related to the reliability of core and containment heat removal systems at some operating plants: Subsection 19.1.3, Section 19.2

- To support regulatory oversight processes and programs that will be associated with plant operations (e.g., technical specifications, reliability assurance, human factors, maintenance rule, RTNSS): Subsection 19.1.7
- To identify and support the development of design requirements, such as inspection, tests, analysis, and acceptance criteria (ITAAC), reliability assurance program (RAP), technical specification, and Combined License (COL) action items and interface requirements: Subsection 19.1.7, Section 19.3
- To demonstrate that contribution to plant risk is insignificant in determining available NPSH from crediting containment accident pressure during periods of high sump temperatures (vapor pressure greater than initial containment pressure): Subsection 19.1.7.1

The results of the US-APWR plant core damage quantification indicate the following CDFs:

- Internal events at power: 1.0E-06/RY
- Internal fire: 8.6E-07/RY
- Internal flood: 8.9E-07/RY
- LPSD: 1.8E-07/RY

Based on SMA, the plant HCLPF value is 0.50 g.

LRFs were determined as follows:

- Internal events at power: 1.1E-07/RY
- Internal fire: 1.9E-07/RY
- Internal flood: 1.6E-07/RY
- LPSD: 1.8E-07/RY

19.1.9 References

19.1-1 Deleted

19.1-2 Deleted

19.1-3 Deleted

19.1-4 PRA Procedures Guide, NUREG/CR-2300, U.S. Nuclear Regulatory Commission, Washington, DC, January 1983.

19.1-5 Severe Accident Risks: An Assessment for Five U.S. Nuclear Power Plants, NUREG-1150, U.S. Nuclear Regulatory Commission, Washington, DC, December 1990.

19.1-6 Performance-Based Standard for Fire Protection for Light Water Reactor Electric Generating Plants, NFPA-805, National Fire Protection Association, Quincy, MA2006 Edition.

19.1-7 EPRI/NRC-RES Fire PRA Methodology for Nuclear Power Facilities, NUREG/CR-6850, U.S. Nuclear Regulatory Commission, Washington, DC, September 2005.

19.1-8 Deleted

19.1-9 An Approach for Determining the Technical Adequacy of Probabilistic Risk Assessment Results for Risk-Informed Activities, Regulatory Guide 1.200, Rev. 2, U.S. Nuclear Regulatory Commission, Washington, DC, March 2009.

19.1-10 MAAP4 Modular Accident Analysis Program for LWR Power Plants, Transmittal Document for MAAP4 Code Revision MAAP 4.0.6, Rev. 0, Report Number FAI/05-47, prepared for the Electric Power Research Institute, 2005.

19.1-11 Risk-Informed Technical Specifications Initiative 4b, Risk-Managed Technical Specifications (RMTS) Guidelines, NEI 06-09, Rev. 0, Nuclear Energy Institute, Washington DC, November 2006.

19.1-12 Requirements for Monitoring the Effectiveness of Maintenance at Nuclear Power Plants, Title 10, Code of Federal Regulations, Part 50.65, U.S. Nuclear Regulatory Commission, Washington, DC.

19.1-13 Quality Assurance Criteria for Nuclear Power Plants and Fuel Reprocessing Plants, Title 10, Code of Federal Regulations, Part 50, Appendix B, U.S. Nuclear Regulatory Commission, Washington, DC.

19.1-14 Deleted

19.1-15 Maintenance of Records, Making of Reports, Title 10, Code of Federal Regulations, Part 50.71, U.S. Nuclear Regulatory Commission, Washington, DC.

19.1-16 Industry-Average Performance for Components and Initiating Events at U.S. Commercial Nuclear Power Plants, NUREG/CR-6928, U.S. Nuclear Regulatory Commission, Washington, DC, February 2007.

19.1-17 Analysis of Core Damage Frequency: Internal Events Methodology, NUREG/CR-4550 Volume 1, Rev. 1, U.S. Nuclear Regulatory Commission, Washington, DC, January 1990.

19.1-18 Nuclear Computerized Library for Assessing Reactor Reliability (NUCLARR), NUREG/CR-4639, U.S. Nuclear Regulatory Commission, Washington, DC, 1990.

19.1-19 PRA Key Assumptions and Ground Rules, Advanced Light Water Reactor Requirements Document, Volume III, Appendix A to Chapter 1, Revisions 5 and 6, Electric Power Research Institute, Palo Alto, CA, December 1993.

19.1-20 Database for Probabilistic Risk Assessment of Light Water Nuclear Power Plants, PLG-0500, 1989

19.1-21 Guide to the Collection And Presentation of Electrical, Electronic, Sensing Component, And Mechanical Equipment Reliability Data For Nuclear Power Generating Stations, IEEE Std. 500, Appendix D, Institute of Electrical and Electronics Engineers, New York, NY, 1984.

19.1-22 Reactor Safety Study: An Assessment of Accident Risks in US Commercial Nuclear Power Plants, WASH-1400 (NUREG 75/014), U.S. Nuclear Regulatory Commission, Washington, DC, 1975.

19.1-23 Estimation of Component Failure Rates for PSA on Nuclear Power Plants 1982 – 1997, Nuclear Information Center, Tokyo, Japan, February 2001.

19.1-24 Guidelines on Modeling Common Cause Failures in Probabilistic Risk Assessment, NUREG/CR-5485, U.S. Nuclear Regulatory Commission, Washington, DC, November 1998.

19.1-25 Procedures for Treating Common Cause Failures in Safety and Reliability Studies, NUREG/CR-4780, U.S. Nuclear Regulatory Commission, Washington, DC, January 1988.

19.1-26 Common Cause Failure Parameter Estimations, NUREG/CR-5497, U.S. Nuclear Regulatory Commission, Washington, DC, October 1998.

19.1-27 Accident Sequence Evaluation Program Human Reliability Analysis Procedure, NUREG/CR-4772, U.S. Nuclear Regulatory Commission, Washington, DC, February 1987.

19.1-28 Handbook of Human Reliability Analysis with Emphasis on Nuclear Power Plants, NUREG/CR-1278, U.S. Nuclear Regulatory Commission, Washington, DC, August 1983.

19.1-29 The SPAR-H Human Reliability Analysis Method, NUREG/CR-6883, U.S. Nuclear Regulatory Commission, Washington, DC, August 2005.

19.1-30 RiskSpectrum User's Manual, RELCON AB,

19.1-31 Qualification and Test Plan of Class 1E Gas Turbine Generator System, MUAP-07024-P (Proprietary) and MUAP-07024-NP (Non-Proprietary), Rev.3, Mitsubishi Heavy Industries, September 2012.

19.1-32 Studies on Fuel Coolant Interactions during Core Melt Accident on Nuclear Power Plants, CSNI Specialist Meeting on Fuel Coolant Interaction, Santa Barbara, January, 1993

19.1-33 Individual Plant Examination of External Events for Severe Accident, Generic Letter No. 88-20, U.S. Nuclear Regulatory Commission, Washington, DC, November 1988.

19.1-34 Policy, Technical, and Licensing Issues Pertaining to Evolutionary and Advanced Light-Water Reactor Designs, SECY-93-087, U.S. Nuclear Regulatory Commission, Washington, DC, letter issued April 2, 1993, and staff requirements memoranda issued July 21, 1993.

19.1-35 Advanced Light Water Reactor Utility Requirements Document, Electric Power Research Institute, Palo Alto, CA, 1986.

19.1-36 Methodology for Developing Seismic Fragilities, EPRI TR-103959, Electric Power Research Institute, Palo Alto, CA, 1994.

19.1-37 Recommendations to the Nuclear Regulatory Commission on Trial Guidelines for Seismic Margin Reviews of Nuclear Power Plants, NUREG/CR-4482, Lawrence Livermore National Laboratory, Livermore, CA, 1986.

19.1-38 CFAST – Consolidated Model of Fire Growth and Smoke Transport (Version 6) User's Guide, NIST Special Publication 1041, National Institute for Standards and Technology, Gaithersburg, MD, December 2005.

19.1-39 Standard Review Plan for the Review of Safety Analysis Reports for Nuclear Power Plants, NUREG-0800, Standard Review Plan 3.4.1, U.S. Nuclear Regulatory Commission, Washington, DC, June 1996.

19.1-40 Pipe Rupture Frequencies for Internal Flooding PRAs, EPRI 1013141, Rev. 1, March 2006.

19.1-41 Reevaluation of Station Blackout Risk at Nuclear Power Plants, NUREG/CR-6890, U.S. Nuclear Regulatory Commission, Washington, DC, December 2005.

19.1-42 Industry Guideline for Monitoring the Effectiveness of Maintenance at Nuclear Power Plants, NUMARC 93-01, Nuclear Energy Institute, July 2000.

19.1-43 10 CFR 50.69 SSC Categorization Guideline, NEI 00-04, Rev. 0, Nuclear Energy Institute, Washington, DC, July 2005.

19.1-44 Risk-Informed Technical Specifications Initiative 5b, Risk-Informed Method for Control of Surveillance Frequencies, NEI 04-10, Rev. 1, Nuclear Energy Institute, Washington DC, April 2007.

19.1-45 Policy, Technical, and Licensing Issues Pertaining to Evolutionary and Advanced Light-Water Reactor Designs,. SECY-93-087, U.S. Nuclear Regulatory Commission, Washington, DC, letter issued April 2, 1993 and Staff Requirements Memoranda issued July 21, 1993.

19.1-46 Rates of Initiating Events at U.S. Nuclear Power Plants, 1987-1995. NUREG/CR-5750, U.S. Nuclear Regulatory Commission, Washington, DC, February 1999.

19.1-47 US-APWR Probabilistic Risk Assessment, MUAP-07030-P Rev. 3 (Proprietary), Mitsubishi Heavy Industries, June 2011.

19.1-48 An Analysis of Loss of Decay Heat Removal Trends and Initiating Event Frequencies (1989-2000), EPRI 1003113, November 2001.

19.1-49 Standard for Level 1/Large Early Release Frequency Probabilistic Risk Assessment for Nuclear Power Plant Applications, ASME/ANS RA-S-2008 (Revision 1 RA-S-2002), American Society of Mechanical Engineers, New York, NY, April 2008.

19.1-50 Addenda to ASME/ANS RA-S-2008, ASME/ANS RA-Sa-2009, American Society of Mechanical Engineers, New York, NY, American Nuclear Society, La Grange Park, IL, February 2009.

19.1-51 Standard Technical Specifications Westinghouse Plants, NUREG-1431 Vol 1, Rev. 3.1, U.S. Nuclear Regulatory Commission, Washington, DC, December 2005.

19.1-52 Standard Technical Specifications Westinghouse Plants, NUREG-1431 Vol 2, Rev. 3.1, U.S. Nuclear Regulatory Commission, Washington, DC, December 2005.

19.1-53 Low Power and Shutdown Risk Assessment Benchmarking Study, EPRI 1003465, December 2002.

19.1-54 Loss of Decay Heat Removal, Generic Letter No. 88-17 (GL 88-17), U.S. Nuclear Regulatory Commission, Washington, DC, October 1988.

19.1-55 Possible Sudden Loss of RCS Inventory During Low Coolant Level Operation, Information Notice 88-36 (IN 88-36), June 1988.

19.1-56 Seismic Fragility Application Guide, EPRI 1002988, December 2002.

19.1-57 Interim Staff Guidance on Implementation of a Probabilistic Risk Assessment-Based Seismic Margin Analysis for New Reactors, DC/COL-ISG-020, U.S. Nuclear Regulatory Commission, October 2009.

Table 19.1-1 Uses of PRA in the Design Process (Sheet 1 of 6)

Cause of core damage or large release		Features and requirements to reduce or eliminate weaknesses in current reactor design
1	Loss of ECCS function	Redundancy - Highly redundant safety injection system design with four advanced accumulators and independent four train HHIS enhances the reliability of safety injection function. In addition, feed and bleed operation is available with one of four HHIS. Diversity - Alternate core cooling/injection utilizing CS/RHRS is available in case all safety injection fail.
2	Loss of ECCS recirculation function	Simplicity - In-containment RWSP is incorporated which results in elimination of switchover to recirculation operation. Reliability of core cooling is enhanced due to simplified operation mode.
3	Loss of containment cooling	Redundancy - Independent four train design adapted to the CS/RHRS enhances reliability of containment spray and RHR function. Diversity - Alternate containment cooling operation utilizing containment fan cooler unit and CCWS enhances the reliability of containment cooling function.
4	Loss of secondary side cooling	Redundancy - Highly redundant EFWS design with two turbine driven EFW pumps and two motor driven EFW pumps enhances the reliability of secondary side cooling.

Table 19.1-1 Uses of PRA in the Design Process (Sheet 2 of 6)

Cause of core damage or large release		Features and requirements to reduce or eliminate weaknesses in current reactor design
5	Loss of support system function	<u>Redundancy</u> - Four train CCWS/ESWS design enhances the reliability of CCWS. Furthermore, CCWS is physically separated into two subsystems to minimize dependency between trains. - Independent four train electrical system design with four Class 1E GTGs provides emergency power to each dedicated safety systems. High redundancy and independency enhances the reliability of power supply to safety systems. <u>Diversity</u> - Alternate component cooling water utilizing fire protection water supply system or the non-essential chilled water system enables to maintain CCW supply to charging pump during loss of CCW events. Thus RCP seal injection function is available under loss of CCW and occurrence of RCP seal LOCA is reduced. - Alternate ac power supported by two non-Class 1E GTGs is incorporated as a countermeasure against SBO. Alternate ac power can supply power to any two of the four Class 1E buses in case Class 1E GTGs fail during loss of offsite power.
6	Failure of reactor trip	<u>Redundancy</u> - Independent four train design of reactor protection systems enhances reliability of plant trip. Four redundant measurements using sensors from the four separate trains are made for each variable used for reactor trip. <u>Diversity</u> - The DAS, which has functions to prevent ATWS, is installed as a countermeasure to CCF of the digital I&C systems.

Table 19.1-1 Uses of PRA in the Design Process (Sheet 3 of 6)

Cause of core damage or large release		Features and requirements to reduce or eliminate weaknesses in current reactor design
7	Interfacing systems LOCA	<u>Prevention</u> - Higher rated piping of residual heat removal systems reduces the occurrence of interfacing systems LOCA. Even if residual heat removal system isolation valves open due to malfunction during normal operation, reactor coolant from main coolant pipe would flow to refueling water storage pit without pipe break outside containment.
8	Loss of RHR function during plant shutdown	<u>Redundancy</u> - Independent four train design of RHRS is adapted to enhance reliability of RHR function. <u>Diversity</u> - As a countermeasure for loss of RHR, RCS makeup by gravity injection from spent fuel pit is available when the RCS is atmospheric pressure. <u>Prevention</u> - To prevent over-drain during mid-loop operation, a loop water level gage and an interlock (automatically actuated by the detection of water level decrease), is provided to isolate water extraction.
9	Internal fire	<u>Physical separation</u> - Safety related SSCs are physical separated into four independent divisions and thus fire propagation through trains is minimized. - Divide the electrical room of T/B into two fire compartments
10	Internal flood	<u>Physical separation</u> - R/B is divided to two divisions (e.g. east side and west side) and thus flood propagation to all four trains is prevented.

Table 19.1-1 Uses of PRA in the Design Process (Sheet 4 of 6)

Cause of core damage or large release		Features and requirements to reduce or eliminate weaknesses in current reactor design
11	Hydrogen combustion	<u>High reliability</u> - Reliability of combustible gas control is enhanced by providing Igniters that automatically start with the ECCS actuation signal. Power supply from two non-Class 1E buses with AACs as well as dedicated batteries to 11 strategically located igniters also enhances reliability of combustible gas control. <u>Inherent margin of safety</u> - Large volume containment provides combustible gas mixing and protection against hydrogen burns.
12	Steam explosion	<u>Inherent margin of safety</u> - There are no mitigation features against in- and ex-vessel steam explosions. In-vessel steam explosion is ignored from the risk aspect. The robust containment internal structure can withstand the explosive energy following steam explosions.
13	High pressure melt ejection	<u>High reliability</u> - A series of depressurization valves which is independent of safety depressurization valves enhances reliability of RCS depressurization and reduces possibility of high pressure melt ejection. - Reactor cavity flooding system consists of the CSS with drain path injection and the direct firewater injection provides highly reliable reactor cavity flooding. <u>Geometrical arrangement</u> - For direct containment heating, core debris trap enhances capturing of ejected molten core in the reactor cavity.

Table 19.1-1 Uses of PRA in the Design Process (Sheet 5 of 6)

Cause of core damage or large release		Features and requirements to reduce or eliminate weaknesses in current reactor design
14	Temperature-induced SGTR	<u>High reliability</u> - A series of depressurization valves which is independent of safety depressurization valves enhances reliability of RCS depressurization and reduces possibility of temperature-induced SGTR.
15	MCCI	<u>High reliability</u> - Reactor cavity flooding system consists of the CSS with drain path injection and the direct firewater injection provides highly reliable reactor cavity flooding. <u>Geometrical arrangement</u> - Reactor cavity floor area and depth facilitate debris spreading and cooling. - Reactor cavity floor concrete provides protection for the liner plate, which is the pressure boundary between the containment and the environment. <u>Inherent margin of safety</u> - Basemat concrete protects against fission products release to the environment.
16	Long-term containment overpressure	<u>Diversity</u> - Containment spray mitigates overpressure in the containment. Alternate containment cooling also removes decay heat accumulated in the steam. Firewater injection to spray header, which dose not have a function of heat removal, delays containment failure and ensure the time to recovery of containment spray. <u>Inherent margin of safety</u> - Large volume containment provides sufficient capability to withstand overpressure.

Table 19.1-1 Uses of PRA in the Design Process (Sheet 6 of 6)

Cause of core damage or large release		Features and requirements to reduce or eliminate weaknesses in current reactor design
17	Containment isolation failure	<u>High reliability</u> - Main penetrations are isolated automatically even when SBO occurs and AAC are not available. <u>Diversity</u> - Manual closure of isolation valves is available using DAS even when automatic isolation fails due to software common cause failure.

Table 19.1-2 Initiating Events for the US-APWR

	IE	Event Description	Frequency	EF (Note)	Reference
1	LLOCA	Large Pipe Break LOCA	1.2E-06	10	NUREG/CR-6928 (Reference19.1-16)
2	MLOCA	Medium Pipe Break LOCA	5.0E-04	10	NUREG/CR-6928
3	SLOCA	Small Pipe Break LOCA	3.6E-03	10	NUREG/CR-6928
4	VSLOCA	Very Small Pipe Break LOCA	1.5E-03	10	NUREG/CR-6928
5	SGTR	Steam Generator Tube Rupture	4.0E-03	-	NUREG/CR-6928
6	RVR	Reactor Vessel Rupture	1.0E-07	3	WASH-1400 (Reference19.1-22)
7	SLBO	Steam Line Break/Leak (Downstream MSIV : Turbine side)	1.0E-02	10	NUREG/CR-5750 (Reference19.1-46)
8	SLBI	Steam Line Break/Leak (Upstream MSIV : CV side)	1.0E-03	10	NUREG/CR-5750
9	FWLB	Feed-water Line Break	3.4E-03	10	NUREG/CR-5750
10	TRANS	General Transient	8.0E-01	3	NUREG/CR-6928
11	LOFF	Loss of Feed-water Flow	1.9E-01	3	NUREG/CR-6928
12	LOCCW	Loss of Component Cooling Water	2.4E-05	10	Fault tree Analysis
13	PLOCW	Partial Loss of Component Cooling Water	3.2E-03	10	NUREG/CR-6928
14	LOOP	Loss of Offsite Power	4.0E-02	3	NUREG/CR-6928
15	LOAC	Loss of Vital ac Bus	9.0E-03	3	NUREG/CR-6928
16	LODC	Loss of Vital DC Bus	1.2E-03	3	NUREG/CR-6928

Note; Error factors (EF) were set based on engineering judgment.

Table 19.1-3 Frontline Systems Shared Systems and Components

Frontline & Shared systems / Frontline Systems (FSs)	Frontline & Shared systems		
	Refueling Water Storage Pit	Containment Spray / Residual Heat Removal System Heat Exchanger	Containment Spray / Residual Heat Removal Pump
Safety Injection System	X		
Containment Spray / Residual Heat Removal System (Spray Injection)	X	X	X
Containment Spray / Residual Heat Removal System (Alternate Core Cooling)	X	X	X

[Note]
X : failure of frontline & shared systems impact to FSs systems

Table 19.1-4 Dependencies Between Frontline Systems and Supporting Systems

Frontline Systems (FSs) \ Supporting Systems (SSs)			Essential Service Water System				Component Cooling Water System				Safety Chilled Water System (Safety-related)				Emergency Station Power Supply System (Safety-related)												Emergency Station Power Supply System (Non-safety)				Heating, Ventilating & Air Conditioning System														Instrument Air		Engineered Safety Features Actuation Signal							
			ESWS				CCWS				CWS(S)				Class 1E GTG/ AC6.9kv				AC480V				DC125V (Switchboard)				AC120V (I&C Panelboard)				AC6.9 kV		AC480 V		Safeguard Component Area				Emergency Power Supply Area				Class 1E Electrical Room				Emergency Feedwater Motor-driven Pump Area		Emergency Feedwater Turbine-driven Pump Area		IA		ECCS Actuation Signal				Containment Spray Actuation Signal			
			A	B	C	D	A	B	C	D	A	B	C	D	A	B	C	D	A	B	C	D	A	B	C	D	A	B	C	D	P1	P2	P1	P2	A	B	C	D	A	B	C	D	A	B	C	D	B	C	A	D	A	B	A	B	C	D	A	B	C	D
Emergency Core Cooling System	Accumulator Injection System	A																	NA																																NA							
		B																		NA																																NA						
		C																			NA																																	NA					
		D																				NA																																	NA				
	Safety Injection System	A					X								X				X				X				X								†																X							
		B						X								X				X				X				X								†																X					
		C							X								X				X				X				X								†																X				
		D								X								X				X				X				X								†															X				
	Containment Spray/ Residual Heat Removal System	A					X								X				X				X				X								†																				X			
		B						X								X				X				X				X								†																			X		
		C							X								X				X				X				X								†																			X	
		D								X								X				X				X				X								†																			X
	Containment Natural Convention Cooling System							X	X										X			X											X	X																								
Chemical and Volume Control System	Charging Injection System	A					X	X							X				2		2		X				X								†	†															NA							
		B							X	X								X	2		2					X				X							†	†														NA					
	Boric Acid Transfer	A																															X																		NA							
		B																																X																		NA						
Main Steam / Feedwater System	Emergency Feed water System	A																	X	X		X					X																							NA							
		B														X			X	X		X		X				X																			X										
		C															X		X		X	X			X				X																				X									
		D																	X		X	X								X																				NA							
	Main Steam line Isolation System	A																					X																												NA	NA						
		B																					X																												NA	NA						
		C																								X																									NA	NA						
		D																								X																									NA	NA						
	Main Steam Pressure Control System	A																	X	X			X	X																											NA	NA						
		B																	X	X			X	X																											NA	NA						
		C																			X	X			X	X																									NA	NA						
		D																			X	X			X	X																									NA	NA						
Reactor Coolant System	Pressurizer Pressure Control System	A																	1																																							
		B																			1																																					
Reactor Trip System & ESF System		I																									X																															
		II																										X																														
		III																											X																													
		IV																												X																											

X : failure of SSs impact to FSs
NA : FSs have dependency with SSs, but failure of SSs do not impact to function of FSs
† : assumed failure of SSs impact late to FSs due to high room temperature
1 : Switchover

Table 19.1-5 System Dependencies between Supporting Systems and Supporting Systems (ESW, CCW, CWS[S], Power Supply)

Supporting Systems (SSs)			Essential Service Water System				Component Cooling Water System				Safety Chiller Water System (Safety)				Emergency Station Power Supply System (Safety)												Emergency Station Power Supply System (Non-safety)				Heating, Ventilating & Air Conditioning System																Engineered Safety Features Actuation Signal							
			ESWS				CCWS				CWS(S)				Class 1E GTG/ AC6.9kv				AC480V				DC125V (Switchboard)				AC120V (I&C Panelboard)				AC6.9 kV		AC480 V		Safeguard Component Area				Emergency Power Supply Area				Class 1E Electrical Room				Emergency Feed water Motor-driven Pump Area		Emergency Feed water Turbine-driven Pump Area		ECCS Actuation Signal				Containment Spray Actuation Signal			
Supporting System (SSs)			A	B	C	D	A	B	C	D	A	B	C	D	A	B	C	D	A	B	C	D	A	B	C	D	A	B	C	D	P1	P2	P1	P2	A	B	C	D	A	B	C	D	A	B	C	D	A	B	C	D	A	B	A	D	A	B	C	D	A	B	C	D
Essential Service Water System	ESWS	A					X				NA				X				X				X				X																										X							
		B						X				X				X				X				X				X																										X						
		C							X				X				X				X				X				X																										X					
		D								X				NA				X				X				X				X																										X				
Component Cooling Water System	CCWS	A	X												X				X				X																														X			X			
		B		X												X				X				X																														X				X		
		C			X												X				X				X																														X				X
		D				X												X				X				X																														X				X
Safety Chilled Water System	CWS(S)	A	NA																NA				NA																														NA							
		B		X																X				X																														X						
		C			X																X				X																														X					
		D				NA																NA				NA																														NA					
Emergency Station Power Supply System	Class 1E GTG/ AC6.9kv	A	X																				X				X												†				†								X							
		B		X																				X				X												†					†								X						
		C			X																				X				X												†					†								X					
		D				X																				X				X												†					†								X					
	AC480V	A													X								X																				†																	
		B														X								X																				†																
		C															X								X																				†															
		D																X								X																				†														
	DC125V (Switchboard)	A																	X																												†													
		B																		X																												†												
		C																			X																												†											
		D																				X																												†										
	AC120V (I&C Panelboard)	A																	X				X																								†													
		B																		X				X																								†												
		C																			X				X																								†											
		D																				X																												†										
Emergency Station Power Supply System (Non-safety)	AC6.9 kV	P1																																																									
		P2																																																									
	AC480V	P1																													X																												
		P2																														X																											

[Notes]

X : failure of upper column SSs impact to left column SSs

NA : failure of upper column SSs do not impact to left column SSs even though have dependency with upper column SSs

† : assumed failure of upper column SSs impact late to left column SSs due to high room temperature

Table 19.1-6 System Dependencies between Supporting Systems and Supporting Systems (HVAC, Signal)

Supporting Systems (SSs)			Essential Service Water System				Component Cooling Water System				Safety Chilled Water System (Safety)				Emergency Station Power Supply System (Safety)														Emergency Station Power Supply System (Non-safety)				Heating, Ventilating & Air Condition System														Engineered Safety Features Actuation Signal							
			ESWS				CCWS				CWS(S)				Class 1E GTG/ AC6.9kv				AC480V				DC125V (Switchboard)				AC120V (I&C Panelboard)				AC6.9 kV		AC480 V		Safeguard Component Area				Emergency Power Supply Area				Class 1E Electrical Room				Emergency Feed water Motor-driven Pump Area		Emergency Feed water Turbine-driven Pump Area		ECCS Actuation Signal				Containment Spray Actuation Signal			
Supporting Systems (SSs)			A	B	C	D	A	B	C	D	A	B	C	D	A	B	C	D	A	B	C	D	A	B	C	D	A	B	C	D	P1	P2	P1	P2	A	B	C	D	A	B	C	D	A	B	C	D	B	C	A	D	A	B	C	D	A	B	C	D
Heating, Ventilating & Air Condition System	Safeguard Component Area	A									NA								NA				NA				NA																								X							
		B										NA								NA				NA				NA																									X						
		C											NA								NA				NA				NA																										X				
		D												NA								NA				NA				NA																										X			
	Emergency Power Supply Area	A									NA								NA				NA				NA																								X							
		B										NA								NA				NA				NA																									X						
		C											NA								NA				NA				NA																										X				
		D												NA								NA				NA				NA																										X			
	Class 1E Electrical Room	A									NA								NA								NA																								X							
		B										NA								NA								NA																									X						
		C											NA								NA								NA																										X				
		D												NA								NA								NA																										X			
	Emergency Feedwater Motor-driven Pump Area	B										X								X								X																									X						
		C											X								X								X																										X				
	Emergency Feedwater Turbin-driven Pump Area	A									NA								NA								NA																								X							
		D												NA								NA								NA																										X			
Engineered Safety Features Actuation Signal	ECCS Actuation Signal	A																					X				X																															
		B																						X				X																															
		C																							X				X																													
		D																								X				X																												
	Containment Spray Actuation Signal	A																					X				X																															
		B																						X				X																															
		C																							X				X																													
		D																								X				X																												

[Notes]

X: failure of upper column SSs impact to left column SSs

NA: failure of upper column SSs do not impact to left column SSs even though have dependency with upper column SSs

Table 19.1-7 Dependencies between Initiating Events and Systems (Sheet 1 of 2)

Initiating Event	System dependant on the initiating event	Impact on system
Large Pipe Break LOCA	Accumulator system	A postulated breach in the cold leg piping can cause one train of the accumulator system to be unavailable. The PRA assumes one train (train A) of the accumulator system to be unavailable during this event.
	Containment spray / residual heat removal	Time available for the operators to initiate alternate core cooling is short. Alternate core cooling utilizing the RHRS is therefore assumed unavailable during this event.
	Power supply system	Time available for the operators to connect the AAC to Class 1E bus is short. It is assumed that AAC cannot be utilized to support power to the Class 1E bus during this event.
Medium Pipe Break LOCA	High head injection system	A postulated breach in the direct vessel injection line can cause on high head injection line to be unavailable. The PRA assumes one train (train A) of high head injection system to be unavailable during this event.
	Accumulator system	A postulated breach in the cold leg piping can cause one train of the accumulator system to be unavailable. The PRA assumes one (tank A) of the accumulator to be unavailable during this event.
	Containment spray / residual heat removal	A postulated breach in the cold leg piping can cause one RHRS train to be unavailable for alternate core cooling. The PRA assumes one train (train A) of the RHRS to be unavailable for alternate core cooling during this event.
Small Pipe Break LOCA	High head injection system	A postulated breach in the direct vessel injection line can cause on high head injection line to be unavailable. The PRA assumes one train (train A) of high head injection system to be unavailable during this event.
Very Small Pipe Break LOCA	None	
Steam Generator Tube Rupture	Systems Related to Secondary cooling	The faulted SG will be isolated and RCS heat cannot be removal via the faulted SG. The PRA assumes that SGTR occurs in loop A and heat removal via the faulted SG is unavailable during this event.
Reactor Vessel Rupture	Systems related to Core Injection	Catastrophic failure of the reactor vessel such that cooling cannot be maintained or recovered is assumed. The PRA assumes that none of the systems can mitigate this event.
Steam Line Break Down Stream MSIV	None	Heat removal from SGs can be performed if main steam isolation valves actuate.

Table 19.1-7 Dependencies between Initiating Events and Systems (Sheet 2 of 2)

Initiating Event	System dependant on the initiating event	Impact on system
Steam Line Break Upstream MSIV	Systems Related to Secondary cooling	Uncontrolled steam release occurs in the steam line where breach has occurred. The PRA assumes that heat removal via one of the SG (Loop A) is unavailable during the event.
Feedwater Line Break	Systems Related to Secondary cooling	Water supply to the SG associated with the faulted feedwater line is unavailable. The PRA assumes that heat removal via one of the SG (Loop A) is unavailable during the event.
General Transient	None	
Loss of Feedwater Flow	Main feedwater system	Main feedwater flow is unavailable by definition of the event. Heat removal via SGs utilizing main feedwater supply is unavailable during the event.
Loss of Component Cooling Water	Component cooling water system, Essential service water system	CCWS or ESWS is unavailable by definition. The PRA assumes that all trains of the CCWS and ESWS are unavailable during the event.
Partial Loss of Component Cooling Water	Component cooling water system, Essential service water system	One subtrain of the CCWS or ESWS is unavailable by definition of the event. The PRA assumes that two trains (train A and B) of the CCWS and ESWS are unavailable during the event.
Loss of Offsite Power	Power supply system	Offsite power is unavailable by definition of the event. The PRA assumes that offsite power is unavailable at the initial stage of this event.
Loss of Vital ac Bus	Emergency power supply system	One Class 1E 6.9kV switchgear is unavailable by definition of the event. The PRA assumes that all components supported by the faulted Class 1E 6.9kV switchgear (train B) are unavailable during this event.
Loss of Vital dc Bus	Emergency power supply system	One Class 1E 125 V dc switchboard is unavailable by definition of the event. The PRA assumes that all components supported by the faulted Class 1E 125 V dc switchboard (train A) are unavailable during this event.

Table 19.1-8 Event Heading ID List (Sheet 1 of 5)

Event Heading ID	Event Heading Description
LLOCA	Occurrence of LLOCA (Large Pipe Break LOCA)
MLOCA	Occurrence of MLOCA (Medium Pipe Break LOCA)
SLOCA	Occurrence of SLOCA (Small Pipe Break LOCA)
VSLOCA	Occurrence of VSLOCA (Very Small Pipe Break LOCA)
SGTR	Occurrence of SGTR (Steam Generator Tube Rupture)
RVR	Occurrence of RVR (Reactor Vessel Rupture)
SLBO	Occurrence of SLBO (Steam Line Break/Leak-Downstream MSIV : Turbine side)
SLBI	Occurrence of SLBI (Steam Line Break/Leak − Upstream MSIV : CV side)
FWLB	Occurrence of FWLB (Feed-water Line Break)
TRANS	Occurrence of TRANS (General Transient)
LOFF	Occurrence of LOFF (Loss of Feed-water Flow)
LOCCW	Occurrence of LOCCW (Loss of Component Cooling Water)
PLOCW	Occurrence of PLOCW (Partial Loss of Component Cooling Water)
LOOP	Occurrence of Loss of Offsite Power
AT	Occurrence of Anticipated Transient
LOAC	Occurrence of Loss of Vital AC Bus
LODC	Occurrence of Loss of Vital DC Bus

Table 19.1-8 Event Heading ID List (Sheet 2 of 5)

Event Heading ID	Event Heading Description
Accumulator Tank Injection System (ACC)	
ACA	Failure of ACC (LLOCA,MLOCA)
ACC	Failure of ACC (Other Initiating Events)
High Head Safety Injection System (HHIS)	
HIA	Failure of HHIS (LLOCA)
HIB	Failure of HHIS (MLOCA, SLOCA)
HIC	Failure of HHIS (Other Initiating Events)
HIF	Failure of HHIS (VSLOCA)
HIK	Failure of HHIS (LOOP)
Charging Injection System	
CHI	Failure of Charging Injection (VSLOCA)
Boric Acid Transfer	
EBI	Failure of Boric Acid Transfer (ATWS)
Containment Spray/Residual Heat Removal System (CS/RHRS) (Containment Spray Injection)	
CSA	Failure of CV Spray Injection (Other Initiating Events)
Containment Spray/Residual Heat Removal System (CS/RHRS) (Heat Removal)	
CXA	Failure of Heat Removal (Other Initiating Events)
CXB	Failure of Heat Removal (SLOCA)
CXB1	Failure of Heat Removal (VSLOCA)
CXB2	Failure of Heat Removal (PLOCW)
CXB3	Failure of Heat Removal (LOOP)
CXC	Failure of Heat Removal (LLOCA,MLOCA)
CXD	Failure of Heat Removal (SGTR)
Containment Spray/Residual Heat Removal System (CS/RHRS) (Alternate Core Cooling)	
CRB	Failure of Alternate Core Cooling (SLOCA)
CRB1	Failure of Alternate Core Cooling (VSLOCA)
CRB2	Failure of Alternate Core Cooling (PLOCW)
CRB3	Failure of Alternate Core Cooling (LOOP)
CRC	Failure of Alternate Core Cooling (LLOCA)
CRD	Failure of Alternate Core Cooling (MLOCA)

Table 19.1-8 Event Heading ID List (Sheet 3 of 5)

Event Heading ID	Event Heading Description
Containment Spray/Residual Heat Removal System (CS/RHRS) (RHR Mode)	
CRA	Failure of RHR Operation (SGTR)
Emergency Feed Water System (EFW)	
EFA	Failure of EFW (Other Initiating Events)
EFB	Failure of EFW (SLBO)
EFC	Failure of EFW (SGTR)
EFD	Failure of EFW (SLBI,FWLB)
EFW	Failure of EFW (ATWS)
EFO	Failure of EFW (LOOP)
Pressurizes Pressure Control System and Safety Injection System	
FBA	Failure of Feed and Bleed operation (LOFF)
FBA1	Failure of Feed and Bleed operation (Other Initiating Events)
FBA2	Failure of Feed and Bleed operation (LOOP)
Pressurizes Pressure Control System	
PZR	Failure of Decompress RCS (SGTR)
PZS	Failure of Decompress RCS (ATWS)
BLA	Failure of Bleed operation (Other Initiating Events)
BLA1	Failure of Bleed operation (SGTR)
Alternate Containment Cooling	
FNA	Failure of Alternate Containment Cooling (LLOCA)
FNA1	Failure of Alternate Containment Cooling (MLOCA)
FNA2	Failure of Alternate Containment Cooling (SLOCA)
FNA3	Failure of Alternate Containment Cooling (LOFF)
FNA4	Failure of Alternate Containment Cooling (LOAC,LOAD,TRANS)
FNA5	Failure of Alternate Containment Cooling (VSLOCA)
FNA6	Failure of Alternate Containment Cooling (SLBO,SLBI,FWLB)
FNA7	Failure of Alternate Containment Cooling (PLOCW)
FNA8	Failure of Alternate Containment Cooling (SGTR)
FNA9	Failure of Alternate Containment Cooling (LOOP)

Table 19.1-8 Event Heading ID List (Sheet 4 of 5)

Event Heading ID	Event Heading Description
Secondary Side Cooling (Main Steam Control System and Emergency Feed Water System)	
SRA	Failure of Secondary Side Cooling (MLOCA,SLOCA)
SRA1	Failure of Secondary Side Cooling (VSLOCA)
SRA2	Failure of Secondary Side Cooling (PLOCW)
SRA4	Failure of Secondary Side Cooling (LOOP)
SRB	Failure of Secondary Side Cooling (SGTR)
Reactor Trip	
RTA	Failure of Reactor Trip (Other Initiating Events)
RTA1	Failure of Reactor Trip (LOOP)
Main Steam isolation	
MSO	Failure of Main Steam isolation (SLBO)
MSI	Failure of Main Steam isolation (SLBI, FWLB)
Isolate Rupture SG	
SGI	Failure of Isolate Rupture SG (SGTR)
Emergency Power Source	
OPS	Failure of Class 1E GTG (LOOP)
Alternate ac Power Source	
ADG	Failure of non-Class 1E GTG (LOOP)
Alternate CCW	
SCA	Failure of RCP Seal Cooling (LOCCW)
SCO1	Failure of RCP Seal Cooling (LOOP)
SCK	Failure of RCP Seal Cooling (PLOCW)

Table 19.1-8 Event Heading ID List (Sheet 5 of 5)

Event Heading ID	Event Heading Description
Other Headings	
CWR	Failure of CCW to Re-start (LOOP)
HT	Failure of Injection Control (SGTR)
MFW	Failure of Main Water System Recovery (TRANS, LOAC, LODC)
SEL	RCP Seal LOCA
SRV	Safety Relief Valve LOCA
PRB	Failure of Power Recovery (1 hour) (LOOP)
PRC	Failure of Power Recovery (3 hours) (LOOP)
MTC	Moderator Temperature Coefficient
TTP	Failure of Turbine Trip (ATWS)
DEP	Failure of Equalization of RCS and Secondary Side Pressure (SGTR)

Table 19.1-9 Descriptions of Event Headings and Branches (Sheet 1 of 20)
Large Pipe Break LOCA (>8 inches)

Event Heading ID	Description	Node ID	Fault Tree Information (3)		Basic Event ID
			Fault Tree Identifier	Fault Tree Analysis Case	
HIA	High head injection system	1	HPI-LL	HPI-LL	-
ACA	Accumulator system	1	ACC-0LL	ACC-0LL	-
CSA	CS/RHR (Containment spray)	1	RSS-CSS	RSS-CSS-LL	-
CRC	CS/RHR (Alternate core cooling)	1	-	-	RSS-RHR-LL(1)
		2	-	-	ZZ0(1)
CXC	CS/RHR (Heat removal)	1	RSS-CSS-HR(2)	RSS-CSS-HR-LL	-
		2	RSS-RHR-HRLM(2)	RSS-RHR-HRLM-LL	-
FNA	Alternate containment cooling	1	NCC	NCC-LL	-

Note(1): CS/RHR (alternate core cooling) is conservatively assumed to be unavailable during this initiating event heading. The probability of basic event ”RSS-RHR-LL", which represents the failure of this function, is set as 1. The probability of basic event ”ZZ0", which represents the failure of this function, is set as 0.

Note(2): RSS-CSS-HR is the fault tree that represents failure of heat removal function for containment spray, while RSS-RHR-HRLM is the fault tree that represents failure of heat removal function by alternate core cooling.

Note(3): See Attachment 6A in Reference 19.1-47.

Table 19.1-9 Descriptions of Event Headings and Branches (Sheet 2 of 20)
Medium Pipe Break LOCA (2 – 8 inches)

Event Heading ID	Description	Node ID	Fault Tree Information (3)		Basic Event ID
			Fault Tree Identifier	Fault Tree Analysis Case	
HIB	High head injection system	1	HPI-ML	HPI-ML	-
ACA	Accumulator system	1	ACC-0LL	ACC-0LL	-
CSA	CS/RHR (Containment spray)	1	RSS-CSS	RSS-CSS	-
CRD	CS/RHR (Alternate core cooling)	1	RSS-RHR-LM	RSS-RHR-LM	-
CXC	CS/RHR (Heat removal)	1	RSS-CSS-HR(1)	RSS-CSS-HR	-
		2	RSS-RHR-HRLM(1)	RSS-RHR-HRLM	-
SRA	RCS depressurization by secondary side cooling	1	MSP-SL	MSP-SL	-
FNA1	Alternate containment cooling	1	NCC	NCC	-
		2	NCC-ML-DP2(2)		-
		3	NCC-ML-DP3(2)		-

Note(1): RSS-CSS-HR is the fault tree that represents failure of heat removal function for containment spray, while RSS-RHR-HRLM is the fault tree that represents failure of heat removal function by alternate core cooling.

Note(2): These fault trees are the same with “NCC” except that human action dependencies with prior tasks in the accident scenario is taken into considered. Refer section 9.4 of chapter 9 in Reference 19.1-47 for detail.

Note(3): See Attachment 6A in Reference 19.1-47.

Table 19.1-9 Descriptions of Event Headings and Branches (Sheet 3 of 20)
Small Pipe Break LOCA (1/2 – 2 inches)

Event Heading ID	Description	Node ID	Fault Tree Information (3)		Basic Event ID
			Fault Tree Identifier	Fault Tree Analysis Case	
RTA	Reactor trip	1	RTP-MF	RTP-MF	-
EFA	Heat removal via SGs	1	EFW-SL	EFW-SL	-
HIB	High head injection system	1	HPI-ML	HPI-ML	-
BLA	Safety depressurization valve	1	PZR-FAB	PZR-FAB	-
ACC	Accumulator system	1	ACC-0SL	ACC-0SL	-
CSA	CS/RHR (Containment spray)	1	RSS-CSS	RSS-CSS	-
CRB	CS/RHR (Alternate core cooling)	1	RSS-RHR-SL	RSS-RHR-SL	-
CXB	CS/RHR (Heat removal)	1	RSS-CSS-HR(1)	RSS-CSS-HR	-
		2	RSS-RHR-HRSL(1)	RSS-RHR-HRSL	-
SRA	RCS depressurization by secondary side cooling	1	MSP-SL	MSP-SL	-
FNA2	Alternate containment cooling	1	NCC	NCC	-
		2	NCC-SL-DP2(2)		-
		3	NCC-SL-DP3(2)		-
		4	NCC-SL-DP4(2)		-

Note(1): RSS-CSS-HR is the fault tree that represents failure of heat removal function for containment spray, while RSS-RHR-HRSL is the fault tree that represents failure of heat removal function by alternate core cooling.

Note(2): These fault trees are the same with “NCC” except that human action dependencies with prior tasks in the accident scenario is taken into considered. Refer section 9.4 of chapter 9 in Reference 19.1-47 for detail.

Note(3): See Attachment 6A in Reference 19.1-47.

Table 19.1-9 Descriptions of Event Headings and Branches (Sheet 4 of 20)
Very Small Pipe Break LOCA (<1/2 inches)

Event Heading ID	Description	Node ID	Fault Tree Information (3)		Basic Event ID
			Fault Tree Identifier	Fault Tree Analysis Case	
RTA	Reactor trip	1	RTP-MF	RTP-MF	-
EFA	Heat removal via SGs	1	EFW-SL	EFW-SL	-
CHI	Charging injection	1	CHI-VS	CHI-VS	-
HIF	High head injection system	1	HPI-SL	HPI-SL	-
		2			-
BLA	Safety depressurization valve	1	PZR-FAB	PZR-FAB	-
ACC	Accumulator system	1	ACC-0SL	ACC-0SL	-
CSA	CS/RHR (Containment spray)	1	RSS-CSS	RSS-CSS	-
CRB1	CS/RHR (Alternate core cooling)	1	RSS-RHR-SL	RSS-RHR-SL	-
CXB1	CS/RHR (Heat removal)	1	RSS-CSS-HR(1)	RSS-CSS-HR	-
		2	RSS-RHR-HRSL(1)	RSS-RHR-HRSL	-
SRA1	RCS depressurization by secondary side cooling	1	MSP-SL	MSP-SL	-
FNA5	Alternate containment cooling	1	NCC	NCC	-
		2	NCC-VS-DP2(2)		-
		3	NCC-VS-DP3(2)		-
		4	NCC-VS-DP4(2)		-

Note(1): RSS-CSS-HR is the fault tree that represents failure of heat removal function for containment spray, while RSS-RHR-HRSL is the fault tree that represents failure of heat removal function by alternate core cooling.

Note(2): These fault trees are the same with “NCC” except that human action dependencies with prior tasks in the accident scenario is taken into considered. Refer section 9.4 of chapter 9 in Reference 19.1-47 for detail.

Note(3): See Attachment 6A in Reference 19.1-47.

Table 19.1-9 Descriptions of Event Headings and Branches (Sheet 5 of 20) Steam Generator Tube Rupture [1/2]

Event Heading ID	Description	Node ID	Fault Tree Information (9)		Basic Event ID
			Fault Tree Identifier	Fault Tree Analysis Case	
RTA	Reactor trip	1	RTP-MF	RTP-MF	-
HIC	High head injection system	1	HPI-SL	HPI-SL	-
EFC	Heat removal via SGs	1	EFW-SG	EFW-SG	-
SGI	Isolation of faulted SG	1	MSP-OS	MSP-OS	-
DEP	Equalize RCS and secondary side pressure	1	DEP-SG	DEP-SG	-
SRB	RCS depressurization by secondary side cooling	1	MSP-SG-DP1(1)	MSP-SG	-
PZR	RCS depressurization by SDV	1	PZR-SGT-DP1(2)	PZR-SGT	-
HT	Injection control	1	HIT-SG-DP1(3)	HIT	-
CRA	CS/RHR (RHR operation)	1	RSS-RHR-SG-DP1(4)	RSS-RHR-SG	-
BLA1	Safety depressurization valve	1	PZR-FAB	PZR-FAB	-
		2	PZR-FAB-SG-DP2(5)		-
CSA	CS/RHR (Containment spray)	1	RSS-CSS	RSS-CSS	-
CXD	CS/RHR (Heat removal)	1	RSS-CSS-HR(6)	RSS-CSS-HR	-
		2	RSS-RHR-HRSG-DP2(6)(7)	RSS-RHR-HRSG	-
FNA8	Alternate containment cooling	1	NCC	NCC	-
		2	NCC-SG-DP2(8)		-
		3	NCC-SG-DP3(8)		-

Table 19.1-9 Descriptions of Event Headings and Branches (Sheet 6 of 20) Steam Generator Tube Rupture [2/2]

Note(1): This fault trees is the same with “MSP-SG” except that human action dependencies with prior tasks in the accident scenario is taken into considered. Refer section 9.4 of chapter 9 in Reference 19.1-47 for detail.

Note(2): This fault trees is the same with “PZR-SGT” except that human action dependencies with prior tasks in the accident scenario is taken into considered. Refer section 9.4 of chapter 9 in Reference 19.1-47 for detail.

Note(3): This fault trees is the same with “HIT” except that human action dependencies with prior tasks in the accident scenario is taken into considered. Refer section 9.4 of chapter 9 for detail.

Note(4): This fault trees is the same with “RSS-RHR-SG” except that human action dependencies with prior tasks in the accident scenario is taken into considered. Refer section 9.4 of chapter 9 in Reference 19.1-47 for detail.

Note(5): This fault trees is the same with “FAB” except that human action dependencies with prior tasks in the accident scenario is taken into considered. Refer section 9.4 of chapter 9 in Reference 19.1-47 for detail.

Note(6): RSS-CSS-HR is the fault tree that represents failure of heat removal function for containment spray, while RSS-RHR-HRSG-DP2 is the fault tree that represents failure of heat removal function by RHR operation.

Note(7): This fault trees is the same with “RSS-RHR-HRSG” except that human action dependencies with prior tasks in the accident scenario is taken into considered. Refer section 9.4 of chapter 9 in Reference 19.1-47 for detail.

Note(8): These fault trees are the same with “NCC” except that human action dependencies with prior tasks in the accident scenario is taken into considered. Refer section 9.4 of chapter 9 in Reference 19.1-47 for detail.

Note(9): See Attachment 6A in Reference 19.1-47.

Table 19.1-9 Descriptions of Event Headings and Branches (Sheet 7 of 20)
Steam Line Break Downstream MSIV

Event Heading ID	Description	Node ID	Fault Tree Information (2)		Basic Event ID
			Fault Tree Identifier	Fault Tree Analysis Case	
RTA	Reactor trip	1	RTP-MF	RTP-MF	-
HIC	High head injection system	1	HPI-SL	HPI-SL	-
MSO	Main steam line isolation	1	MSR-O-00	MSR-O-00	-
EFB	Heat removal via SGs	1	EFW-SLBO	EFW-SLBO	-
BLA	Safety depressurization valve	1	PZR-FAB	PZR-FAB	-
CSA	CS/RHR (Containment spray)	1	RSS-CSS	RSS-CSS	-
CXA	CS/RHR (Heat removal)	1	RSS-CSS-HR	RSS-CSS-HR	-
FNA6	Alternate containment cooling	1	NCC	NCC	-
		2	NCC-SF-DP2(1)		-

Note(1): This fault trees is the same with “NCC” except that human action dependencies with prior tasks in the accident scenario is taken into considered. Refer section 9.4 of chapter 9 in Reference 19.1-47 for detail.

Note(2): See Attachment 6A in Reference 19.1-47.

Table 19.1-9 Descriptions of Event Headings and Branches (Sheet 8 of 20)
Steam Line Break Upstream MSIV

Event Heading ID	Description	Node ID	Fault Tree Information (2)		Basic Event ID
			Fault Tree Identifier	Fault Tree Analysis Case	
RTA	Reactor trip	1	RTP-MF	RTP-MF	-
HIC	High head injection system	1	HPI-SL	HPI-SL	-
MSI	Main steam line isolation	1	MSR-I-00	MSR-I-00	-
EFD	Heat removal via SGs	1	EFW-SB	EFW-SB	-
BLA	Safety depressurization valve	1	PZR-FAB	PZR-FAB	-
CSA	CS/RHR (Containment spray)	1	RSS-CSS	RSS-CSS	-
CXA	CS/RHR (Heat removal)	1	RSS-CSS-HR	RSS-CSS-HR	-
FNA6	Alternate containment cooling	1	NCC	NCC	-
		2	NCC-SF-DP2(1)		-

Note(1): This fault trees is the same with “NCC” except that human action dependencies with prior tasks in the accident scenario is taken into considered. Refer section 9.4 of chapter 9 in Reference 19.1-47 for detail.

Note(2): See Attachment 6A in Reference 19.1-47.

Table 19.1-9 Descriptions of Event Headings and Branches (Sheet 9 of 20)
Feedwater Line Break

Event Heading ID	Description	Node ID	Fault Tree Information (2)		Basic Event ID
			Fault Tree Identifier	Fault Tree Analysis Case	
RTA	Reactor trip	1	RTP-MF	RTP-MF	-
HIC	High head injection system	1	HPI-SL	HPI-SL	-
MSI	Main steam line isolation	1	MSR-I-00	MSR-I-00	-
EFD	Heat removal via SGs	1	EFW-SB	EFW-SB	-
BLA	Safety depressurization valve	1	PZR-FAB	PZR-FAB	-
CSA	CS/RHR (Containment spray)	1	RSS-CSS	RSS-CSS	-
CXA	CS/RHR (Heat removal)	1	RSS-CSS-HR	RSS-CSS-HR	-
FNA6	Alternate containment cooling	1	NCC	NCC	-
		2	NCC-SF-DP2(1)		-

Note(1): This fault trees is the same with “NCC” except that human action dependencies with prior tasks in the accident scenario is taken into considered. Refer section 9.4 of chapter 9 in Reference 19.1-47 for detail.

Note(2): See Attachment 6A in Reference 19.1-47.

Table 19.1-9 Descriptions of Event Headings and Branches (Sheet 10 of 20)
General Transient

Event Heading ID	Description	Node ID	Fault Tree Information (3)		Basic Event ID
			Fault Tree Identifier	Fault Tree Analysis Case	
RTA	Reactor trip	1	RTP-MF	RTP-MF	-
EFA	Heat removal via SGs	1	EFW-SL	EFW-SL	-
MFW	Main feed water recovery	1	MFW	MFW	-
FBA1	Feed and Bleed	1	HPI-FAB-TR-DP1(1)	HPI-FAB	-
CSA	CS/RHR (Containment spray)	1	RSS-CSS	RSS-CSS	-
CXA	CS/RHR (Heat removal)	1	RSS-CSS-HR	RSS-CSS-HR	-
FNA4	Alternate containment cooling	1	NCC-TR-DP1(2)	NCC	-
		2	NCC-TR-DP2(2)		-

Note(1): This fault trees is the same with “HPI-FAB” except that human action dependencies with prior tasks in the accident scenario is taken into considered. Refer section 9.4 of chapter 9 in Reference 19.1-47 for detail.

Note(2): These fault trees are the same with “NCC” except that human action dependencies with prior tasks in the accident scenario is taken into considered. Refer section 9.4 of chapter 9 in Reference 19.1-47 for detail.

Note(3): See Attachment 6A in Reference 19.1-47.

Table 19.1-9 Descriptions of Event Headings and Branches (Sheet 11 of 20)
Loss of Feedwater Flow

Event Heading ID	Description	Node ID	Fault Tree Information (2)		Basic Event ID
			Fault Tree Identifier	Fault Tree Analysis Case	
RTA	Reactor trip	1	RTP-MF	RTP-MF	-
EFA	Heat removal via SGs	1	EFW-SL	EFW-SL	-
FBA	Feed and bleed	1	HPI-FAB	HPI-FAB	-
CSA	CS/RHR (Containment spray)	1	RSS-CSS	RSS-CSS	-
CXA	CS/RHR (Heat removal)	1	RSS-CSS-HR	RSS-CSS-HR	-
FNA3	Alternate containment cooling	1	NCC	NCC	-
		2	NCC-LF-DP2(1)		-

Note(1): This fault trees is the same with “NCC” except that human action dependencies with prior tasks in the accident scenario is taken into considered. Refer section 9.4 of chapter 9 in Reference 19.1-47 for detail.

Note(2): See Attachment 6A in Reference 19.1-47.

Table 19.1-9 Descriptions of Event Headings and Branches (Sheet 12 of 20)
Loss of Component Cooling Water

Event Heading ID	Description	Node ID	Fault Tree Information (2)		Basic Event ID
			Fault Tree Identifier	Fault Tree Analysis Case	
RTA	Reactor trip	1	RTP-MF	RTP-MF	-
EFA	Heat removal via SGs	1	EFW-SL	EFW-SL-LC	-
SRV	Stuck open safety valve LOCA	1	POV	POV	-
SCA	Alternate component cooling	1	ACW	ACW	-
SEL	RCP seal LOCA	1	-	-	RCP-SEAL(1)
		2	-	-	ZZ0(1)

Note(1): The probability of basic event ”RCP-SEAL", which represents the occurrence of RCP seal LOCA, is set as 1. The probability of basic event ”ZZ0", which represents the occurrence of RCP seal LOCA, is set as 0. Please refer to the description of 6A.14.2.

Note(2): See Attachment 6A in Reference 19.1-47.

Table 19.1-9 Descriptions of Event Headings and Branches (Sheet 13 of 20)
Partial Loss of Component Cooling Water [1/2]

Event Heading ID	Description	Node ID	Fault Tree Information (7)		Basic Event ID
			Fault Tree Identifier	Fault Tree Analysis Case	
RTA	Reactor trip	1	RTP-MF	RTP-MF	-
EFA	Heat removal via SGs	1	EFW-SL	EFW-SL-PC	-
SRV	Stuck open safety valve LOCA	1	POV	POV	-
SCK	RCP seal cooling	1	SEC-PLOCW	SEC-PLOCW	-
SEL	RCP seal LOCA	1	-	-	RCP-SEAL(1)
		2	-	-	ZZ0(1)
HIC	High head injection system	1	HPI-SL	HPI-SL-PC	-
BLA	Safety depressurization valve	1	PZR-FAB	PZR-FAB	-
ACC	Accumulator system	1	ACC-0SL	ACC-0SL	-
CSA	CS/RHR (Containment spray)	1	RSS-CSS	RSS-CSS-PC	-
CRB2	CS/RHR (Alternate core cooling)	1	RSS-RHR-SL	RSS-RHR-SL-PC	-
		2	RSS-RHR-SLPL-DP2(2)		-
CXB2	CS/RHR (Heat removal)	1	RSS-CSS-HR(3)	RSS-CSS-HR-PC	-
		2	RSS-RHR-HRSL(3)	RSS-RHR-HRSL-PC	-
		3	RSS-RHR-HRSLP-DP3(3) (4)		-
SRA2	RCS depressurization by secondary side cooling	1	MSP-SL	MSP-SL-PC	-
		2	MSP-SL-PL-DP2(5)		-

Table 19.1-9 Descriptions of Event Headings and Branches (Sheet 14 of 20) Partial Loss of Component Cooling Water [2/2]

Event Heading ID	Description	Node ID	Fault Tree Information (7)		Basic Event ID
			Fault Tree Identifier	Fault Tree Analysis Case	
FNA7	Alternate containment cooling	1	NCC	NCC-PC	-
		2	NCC-PL-DP2(6)		-
		3	NCC-PL-DP3(6)		-
		4	NCC-PL-DP4(6)		-
		5	NCC-PL-DP5(6)		-
		6	NCC-PL-DP6(6)		-
		7	NCC-PL-DP7(6)		-

Note(1): The probability of basic event ”RCP-SEAL", which represents the occurrence of RCP seal LOCA, is set as 1. The probability of basic event ”ZZ0", which represents the occurrence of RCP seal LOCA, is set as 0. Please refer to the description of 6A.14.2 in Reference 19.1-47.

Note(2): These fault trees are the same with “RSS-RHR-SL” except that human action dependencies with prior tasks in the accident scenario is taken into considered. Refer section 9.4 of chapter 9 in Reference 19.1-47 for detail.

Note(3): RSS-CSS-HR is the fault tree that represents failure of heat removal function for containment spray, while RSS-RHR-HRSL is the fault tree that represents failure of heat removal function by alternate core cooling.

Note(4): This fault trees is the same with “RSS-RHR-HRSL” except that human action dependencies with prior tasks in the accident scenario is taken into considered. Refer section 9.4 of chapter 9 in Reference 19.1-47 for detail.

Note(5): These fault trees are the same with “MSP-SL” except that human action dependencies with prior tasks in the accident scenario is taken into considered. Refer section 9.4 of chapter 9 in Reference 19.1-47 for detail.

Note(6): These fault trees are the same with “NCC” except that human action dependencies with prior tasks in the accident scenario is taken into considered. Refer section 9.4 of chapter 9 in Reference 19.1-47 for detail.

Note(7): See Attachment 6A in Reference 19.1-47.

Table 19.1-9 Descriptions of Event Headings and Branches (Sheet 15 of 20) Loss of Offsite Power [1/3]

Event Heading ID	Description	Node ID	Fault Tree Information (12)		Basic Event ID
			Fault Tree Identifier	Fault Tree Analysis Case	
RTA1	Reactor trip	1	RTP-LO	RTP-LO	-
OPS	Emergency power source	1	OPS	OPS	-
ADG	Alternate ac power source	1	SDG	SDG	-
EFO	Heat removal via SGs	1	EFW-LO	EFW-LO-LP1 EFW-LO-LP2 EFW-LO-LP3	-
		2			
SRV	Stuck open safety valve LOCA	1	POV	POV	-
PRB	Offsite power recovery within one hour	1	-		OPS----PRBF(1)
		2	-		OPS----PRBS(1)
PRC	Offsite power recovery within three hour	1	-		OPS----PRCF(1)
		2	-		OPS----PRCS(1)
CWR	CCWS restart	1	CWS-R4(2)	CWS-R4-LP1 CWS-R4-LP2	-
		3			-
		2	CWS-R2(2)	CWS-R2	-
SCO1	RCP seal cooling	1	ACW	ACW-LP1 ACW-LP2	-
		3			-
		2	ACW-DP2(3)	ACW-LP2	-
SEL	RCP seal LOCA	1	-		RCP-SEAL(4)
		2	-		ZZ0(4)
HIK	High head injection system (with emergency power source (include AAC))	1	HPI-SL	HPI-SL-LP1 HPI-SL-LP2	-
FBA2	Feed and Bleed	1	HPI-FAB(5)	HPI-FAB-LP1 HPI-FAB-LP2	-
		2	PZR-FAB(5)	PZR-FAB	-
		3	HPI-FAB-LP-DP3(5) (6)	HPI-FAB-LP2	-
ACC	Accumulator system	1	ACC-0SL	ACC-0SL	-
CSA	CS/RHR (Containment spray)	1	RSS-CSS	RSS-CSS-LP1 RSS-CSS-LP2	-

Table 19.1-9 Descriptions of Event Headings and Branches (Sheet 16 of 20)
Loss of Offsite Power [2/3]

Event Heading ID	Description	Node ID	Fault Tree Information (12)		Basic Event ID
			Fault Tree Identifier	Fault Tree Analysis Case	
CRB3	CS/RHR (Alternate core cooling)	1	RSS-RHR-SL	RSS-RHR-SL-LP1 RSS-RHR-SL-LP2	-
		2	RSS-RHR-SL-LP-DP2(7)	RSS-RHR-SL-LP2	-
CXB3	CS/RHR (Heat removal)	1	RSS-CSS-HR(8)	RSS-CSS-HR-LP1 RSS-CSS-HR-LP2	-
		2	RSS-RHR-HRSL(8)	RSS-RHR-HRSL-LP1 RSS-RHR-HRSL-LP2	-
		3	RSS-RHR-HRSL-LP-DP3(8) (9)	RSS-RHR-HRSL-LP2	-
SRA4	RCS depressurization by secondary side cooling	1	MSP-LO	MSP-LO-LP1 MSP-LO-LP2	-
		2	MSP-LO-DP2(10)	MSP-LO-LP2	-
FNA9	Alternate containment cooling	1	NCC	NCC-LP1 NCC-LP2	-
		2	NCC-LP-DP2(11)	NCC-LP1 NCC-LP2	-
		3	NCC-LP-DP3(11)	NCC-LP1 NCC-LP2	-
		4	NCC-LP-DP4(11)	NCC-LP1 NCC-LP2	-
		5	NCC-LP-DP5(11)	NCC-LP1 NCC-LP2	-
		6	NCC-LP-DP6(11)	NCC-LP2	-
		7	NCC-LP-DP7(11)	NCC-LP2	-
		8	NCC-LP-DP8(11)	NCC-LP2	-
		9	NCC-LP-DP9(11)	NCC-LP2	-

Table 19.1-9 Descriptions of Event Headings and Branches (Sheet 17 of 20) Loss of Offsite Power [3/3]

Note(1): Please refer to the description of 6A.14.7 in Reference 19.1-47.

Note(2): CWS-R4 is FT of failure of re-start of all CCWS pumps under success condition of emergency power source, and CWS-R2 is also FT of failure of re-start of two CCWS pumps under of success condition of AAC.

Note(3): This fault trees is the same with “ACW” except that human action dependencies with prior tasks in the accident scenario is taken into considered. Refer section 9.4 of chapter 9 in Reference 19.1-47 for detail.

Note(4): The probability of basic event ”RCP-SEAL", which represents the occurrence of RCP seal LOCA, is set as 1. The probability of basic event ”ZZ0", which represents the occurrence of RCP seal LOCA, is set as 0. Please refer to the description of 6A.14.2 in Reference 19.1-47.

Note(5): HPI-FAB is FT of both failures of SDV open and HHIS. FAB is FT of only failure of SDV.

Note(6): This fault trees is the same with “HPI-FAB” except that human action dependencies with prior tasks in the accident scenario is taken into considered. Refer section 9.4 of chapter 9 in Reference 19.1-47 for detail.

Note(7): This fault trees is the same with “RSS-RHR-SL” except that human action dependencies with prior tasks in the accident scenario is taken into considered. Refer section 9.4 of chapter 9 in Reference 19.1-47 for detail.

Note(8): RSS-CSS-HR is the fault tree that represents failure of heat removal function for containment spray, while RSS-RHR-HRSL is the fault tree that represents failure of heat removal function by alternate core cooling.

Note(9): This fault trees is the same with “RSS-RHR-HRSL” except that human action dependencies with prior tasks in the accident scenario is taken into considered. Refer section 9.4 of chapter 9 in Reference 19.1-47 for detail.

Note(10): This fault trees is the same with “MSP-LO” except that human action dependencies with prior tasks in the accident scenario is taken into considered. Refer section 9.4 of chapter 9 in Reference 19.1-47 for detail.

Note(11): These fault trees are the same with “NCC” except that human action dependencies with prior tasks in the accident scenario is taken into considered. Refer section 9.4 of chapter 9 in Reference 19.1-47 for detail.

Note(12): See Attachment 6A in Reference 19.1-47.

Table 19.1-9 Descriptions of Event Headings and Branches (Sheet 18 of 20)
Loss of Vital AC Bus

Event Heading ID	Description	Node ID	Fault Tree Information (3)		Basic Event ID
			Fault Tree Identifier	Fault Tree Analysis Case	
EFA	Heat removal via SGs	1	EFW-SL	EFW-SL-AC	-
MFW	Main feed water recovery	1	MFW	MFW	-
FBA1	Feed and Bleed	1	HPI-FAB-TR-DP1(1)	HPI-FAB-AC	-
CSA	CS/RHR (Containment spray)	1	RSS-CSS	RSS-CSS-AC	-
CXA	CS/RHR (Heat removal)	1	RSS-CSS-HR	RSS-CSS-HR-AC	-
FNA4	Alternate containment cooling	1	NCC-TR-DP1(2)	NCC-AC	-
		2	NCC-TR-DP2(2)		-

Note(1): This fault trees is the same with “HPI-FAB” except that human action dependencies with prior tasks in the accident scenario is taken into considered. Refer section 9.4 of chapter 9 in Reference 19.1-47 for detail.

Note(2): These fault trees are the same with “NCC” except that human action dependencies with prior tasks in the accident scenario is taken into considered. Refer section 9.4 of chapter 9 in Reference 19.1-47 for detail.

Note(3): See Attachment 6A in Reference 19.1-47.

Table 19.1-9 Descriptions of Event Headings and Branches (Sheet 19 of 20)
Loss of Vital DC Bus

Event Heading ID	Description	Node ID	Fault Tree Information (3)		Basic Event ID
			Fault Tree Identifier	Fault Tree Analysis Case	
EFA	Heat removal via SGs	1	EFW-SL	EFW-SL-DC	-
MFW	Main feed water recovery	1	MFW	MFW	-
FBA1	Feed and Bleed	1	HPI-FAB-TR-DP1(1)	HPI-FAB-DC	-
CSA	CS/RHR (Containment spray)	1	RSS-CSS	RSS-CSS-DC	-
CXA	CS/RHR (Heat removal)	1	RSS-CSS-HR	RSS-CSS-HR-DC	-
FNA4	Alternate containment cooling	1	NCC-TR-DP1(2)	NCC-DC	-
		2	NCC-TR-DP2(2)		-

Note(1): This fault trees is the same with “HPI-FAB” except that human action dependencies with prior tasks in the accident scenario is taken into considered. Refer section 9.4 of chapter 9 for detail.

Note(2): These fault trees are the same with “NCC” except that human action dependencies with prior tasks in the accident scenario is taken into considered. Refer section 9.4 of chapter 9 for detail.

Note(3): See Attachment 6A in Reference 19.1-47.

Table 19.1-9 Descriptions of Event Headings and Branches (Sheet 20 of 20)
Anticipated transient without scram

Event Heading ID	Description	Node ID	Fault Tree Information (1)		Basic Event ID
			Fault Tree Identifier	Fault Tree Analysis Case	
RTA	Reactor trip	1	RTP-MF	RTP-MF	-
TTP	Turbine trip	1	TTP	TTP	-
MTC	Moderator Temperature Coefficient	1	MTC	MTC	-
PZS	Pressurizer Safety Valve	1	PZS	PZS	-
EFE	Emergency Feed Water System	1	EFW-AT	EFW-AT	-
EBI	Boric Acid Transfer	1	EBI	EBI	-

Note(1): See Attachment 6A in Reference 19.1-47.

Table 19.1-10 Definition of Accident Classes for US-APWR

No	ACL	Initiating Event and Primary System Pressure		C/V intact or failed at core damage*1	Loss of Support System initiating events	Accident Progression in Containment		
						C/V Spray	C/V Heat Removal	Availability of Reactor Cavity Flooding
1	AED	L/MLOCA	Low	Intact at CD	No	-	-	-
2	AEF	L/MLOCA	Low	Intact at CD	No	-	X	-
3	AEW	L/MLOCA	Low	Intact at CD	No	-	-	X
4	AES	L/MLOCA	Low	Intact at CD	No	X*2	-	X
5	AEHF	L/MLOCA	Low	Intact at CD	No	-	X	X
6	AEHS	L/MLOCA	Low	Intact at CD	No	X*2	X	X
7	AEI	L/MLOCA	Low	Intact at CD	No	X	X	X
8	ALC	L/MLOCA	Low	Before CD	No	-	-	X
9	SED	SLOCA	Med	Intact at CD	No	-	-	-
10	SED'	SLOCA	Med	Intact at CD	Power	-	-	-
11	SED"	SLOCA	Med	Intact at CD	CCW	-	-	-
12	SEF	SLOCA	Med	Intact at CD	No	-	X	-
13	SEW	SLOCA	Med	Intact at CD	No	-	-	X*3
14	SES	SLOCA	Med	Intact at CD	No	X*2	-	X
15	SEHF	SLOCA	Med	Intact at CD	No	-	X	X*3
16	SEHS	SLOCA	Med	Intact at CD	No	X*2	X	X
17	SEI	SLOCA	Med	Intact at CD	No	X	X	X
18	SLC	SLOCA	Med	Before CD	No	-	-	X
19	TED	Transient	High	Intact at CD	No	-	-	-
20	TED'	Transient	High	Intact at CD	Power	-	-	-
21	TED"	Transient	High	Intact at CD	CCW	-	-	-
22	TEF	Transient	High	Intact at CD	No	-	X	-
23	TEW	Transient	High	Intact at CD	No	-	-	X*3
24	TES	Transient	High	Intact at CD	No	X*2	-	X
25	TEHF	Transient	High	Intact at CD	No	-	X	X*3
26	TEHS	Transient	High	Intact at CD	No	X*2	X	X
27	TEI	Transient	High	Intact at CD	No	X	X	X
28	G	SGTR	Med	- *4				

*1: Containment Isolation failure is not considered.
*2: Failure of CS/RHR HX
*3: SIS or alternate core cooling after RV failure
*4: Containment bypass event
*5: CD: core damage
X: Available
-: Not Available

Table 19.1-11 Systems Included in Systems Analysis for Internal Events

Systems name (Front line systems)	I.D.
High head injection system	HPI
Accumulator injection system	ACC
Emergency feedwater system	EFW
Containment spray / Residual heat removal system	RSS
Main steam pressure control system, main steam safety valve	MSP
Pressurizer pressure control system, Pressurizer safety valve	PZR
Main steam isolation system	MSR
Charging injection system	CHI
Boric acid transfer	EBI

System name (Supporting systems)	I.D.
Emergency power supply system	EPS
Reactor protection system	RTP
Component cooling water system	CWS
Essential service water system	SWS
Protections and safety monitoring system	SGN
Heating, ventilating and air conditioning system	HVA

System name (Other systems and functions)	I.D.
Offsite power system	OPS
RCP seal LOCA	RCP
High head injection control	HIT
Alternate component cooling water system	ACW
Essential chilled water system	VCW
Main feed water system	MFW

System name (Common equipment)	I.D.
RWSP and water intake line rupture	RWS
Alternate containment cooling by containment fan cooler units	NCC
Injection line	INJ

Table 19.1-12 The Relation of Plant Safety Functions and Initiating Events

Initiating Events	Plant Safety Functions				
	Reactivity Control	RCS Pressure Control	RCS Inventory Control	Decay Heat Removal Function	Containment Heat Removal and CI
Large Pipe Break LOCA	-- (Note 1)	--	X	X	X
Medium Pipe Break LOCA	-- (Note 1)	--	X	X	X
Small Pipe Break LOCA	X	--	X	X	X
Very Small Pipe Break LOCA	X	--	X	X	--
Reactor Vessel Rupture	--	--	--	--	--
Steam Generator Tube Rupture	X	X (Fail ISO) (Note2)	X (Fail ISO)	X	--
Steam Line Break (downstream of MSIV)	X	--	--	X	--
Steam Line Break (upstream of MSIV, inside C/V)	X	--	--	X	--
Feed Line Break	X	--	--	X	--
General Transient	X	--	--	X	--
Loss of Main Feedwater	X	--	--	X	--
Total Loss of Component Cooling	X	--	X (LOCA) (Note3)	X	X (LOCA))
Partial Loss of Component Cooling	X	--	X (LOCA) (Note3)	X	X (LOCA))
Loss of Offsite Power	X	--	X (LOCA) (Note3)	X	X (LOCA))
Loss of Vital AC Bus	X	--	--	X	--
Loss of Vital DC Bus	X	--	--	X	--
Anticipated transient without scram	X	X	--	-	--

Note 1; even if this safety function is not available, core damage may not occur.
Note 2; If failed SG cannot be isolated, primary coolant leak would be continue
Note 3; LOCA means RCP seal LOCA or Pressurizer Safety Valve stuck open
X; It means that this safety function is required to prevent core damage.
--; It means that this safety function is not required or not effective.

Table 19.1-13 Mitigating systems for Safety Functions in each Initiating Event (Sheet 1 of 2)

Initiating Events	Plant Safety Functions				
	Reactivity Control	RCS Pressure Control	RCS Inventory Control	Decay Heat Removal Function	Containment Heat Removal and CI
Large Pipe Break LOCA	--	--	ACC + HHIS	HHIS	CS/RHRS
Medium Pipe Break LOCA	--	--	ACC + HHIS	HHIS	CS/RHRS
Small Pipe Break LOCA	RPS		HHIS	EFWS	CS/RHRS
Very Small Pipe Break LOCA	RPS		HHIS or CVCS	EFWS	--
Reactor Vessel Rupture	--	--	--	--	--
Steam Generator Tube Rupture	RPS	MSDV or SDV	ISO + DEP	EFWS	--
Steam Line Break Downstream MSIV	RPS	--	--	EFWS and ISO	--
Steam Line Break Upstream MSIV	RPS	--	--	EFWS and ISO	--
Feedwatar Line Break	RPS	--	--	EFWS and ISO	--
General Transient	RPS	--	--	EFWS or MFWS	--
Loss of Feedwater Flow	RPS	--	--	EFWS	--
Loss of Component Cooling Water	RPS	--	--	EFWS	--
Partial Loss of Component Cooling Water	RPS	--	HHIS With CCWS	EFWS	CS/RHRS With CCWS
Loss of Offsite Power	RPS	--	HHIS With ac power	EFWS	CS/RHRS With ac power
Loss of Vital AC Bus	RPS	--	--	EFWS or MFWS	--
Loss of Vital DC Bus	RPS	--	--	EFWS or MFWS	--
Anticipated Transient without Scram	RPS or DAS, MTC+TTP	PRSV+EFWS	--	-	--

Table 19.1-13 Mitigating systems for Safety Functions in each Initiating Event (Sheet 2 of 2)

RPS: Reactor Protection System
CS/RHRS: Containment Spray/Residual Heat Removal System
ISO: Isolation
ACC: Accumulators
EFWS: Emergency Feedwater System
DAS: Diverse Actuation System
HHIS: High Head Injection System
CVCS: Chemical and Volume Control System
PRSV: Pressurizer Safety Valves
MSDV: Main Steam Depressurization Valves
SDV: Safety Depressurization Valves
TTP: Turbine Trip
MTC: Moderator Temperature Coefficient
MFWS: Main Feedwater System
CCWS: Component Cooling Water System

Table 19.1-14 Mitigating Systems for Safety Functions in each Alternate Operator Action

Alternative Operator Actions	Failed System	Plant Safety Functions					Notes
		Reactivity Control	RCS Pressure Control	RCS Inventory Control	Decay Heat Removal Function	Containment Heat Removal and CI	
Feed and bleed / Safety depressurization valve	Secondary Side Cooling	--	SDV	HHIS	HHIS and SDV		CS/RHRS operation is required
CS/RHRS (Alternate core cooling)	HHIS	--		CS/RHRS	CS/RHRS	CS/RHRS	Alternate core cooling operation is required
Alternate containment cooling	Containment Spray	--	--	--	CCWS through the containment fan cooler unit	CCWS through the containment fan cooler unit	
RCS depressurization by secondary side cooling	HHIS	--	EFWS and MSDV	--	EFWS and MSDV	--	
Preparation for RHR operation in SGTR	Isolation of Faulted SG	--	EFWS and MSDV and SDV and SI stop	CVCS	--	--	RHR operation is available
RCP seal cooling / Alternate component cooling	CCWS	--	--	--	--	--	Action to avoid RCP seal LOCA
Alternate ac power source	Emergency Power Generator	--	--	--	--	--	Action for support system recovery

CS/RHRS: Containment Spray/Residual Heat Removal System
EFWS: Emergency Feedwater System
HHIS: High Head Injection System
CVCS: Chemical and Volume Control System
PRSV: Pressurizer Safety Valves
MSDV: Main Steam Depressurization Valves
SDV: Safety Depressurization Valves
CCWS: Component Cooling Water System
SI: Safety Injection
RHR: Residual Heat Removal

Table 19.1-15 Typical Results of Thermal/Hydraulic Analysis (Sheet 1 of 14)

No.	Objective of the analysis	Accident sequence description						Computer code and results	Insights from success criteria analysis
		Initiating event	SI pumps	Accumulators	EFW pumps	CS pumps	Other measures		
1.1	To judge required number of safety injection pumps and accumulators for large and medium pipe break LOCA.	Hot leg 8 inch break	2	2	4	4	-	MAAP4.0.6 PCT=643° F < 1400° F	The results show that the core cooling can be maintained with only one(1) SI pump for 8 inch break. However, in consideration of large uncertainties of MAAP analysis for the short-term behavior in large pipe break LOCA, the success criteria for the number of accumulators are conservatively assumed two(2), which is also applied to medium pipe break LOCA. Regarding the success criteria for SI pumps, one(1) pump is assumed to be sufficient for medium pipe break LOCA and two(2) pumps are assumed to be necessary for large pipe break LOCA in consideration of uncertainties.
		Hot leg 8 inch break	2	1	4	4	-	MAAP4.0.6 PCT=643° F < 1400° F	
		Hot leg 8 inch break	2	0	4	4	-	MAAP4.0.6 PCT=643° F < 1400° F	
		Hot leg 8 inch break	1	2	4	4	-	MAAP4.0.6 PCT=643° F < 1400° F	
		Hot leg 8 inch break	1	1	4	4	-	MAAP4.0.6 PCT=643° F < 1400° F	
		Hot leg 8 inch break	1	0	4	4	-	MAAP4.0.6 PCT=643° F < 1400° F	

Table 19.1-15 Typical Results of Thermal/Hydraulic Analysis (Sheet 2 of 14)

No.	Objective of the analysis	Accident sequence description						Computer code and results	Insights from success criteria analysis
		Initiating event	SI pumps	Accumulators	EFW pumps	CS pumps	Other measures		
1.1		Cold leg double ended guillotine break	2	2	-	-	-	WCOBRA/TRAC (M1.0) PCT=1763° F < 2200° F	
1.2	To judge required number of safety injection pumps and accumulators for DVI-line break LOCA.	Cold leg 4 inch break	1	2	4	4	-	MAAP4.0.6 PCT=643° F < 1400° F	The results show that the core cooling can be maintained with only one(1) SI pump for 4 inch break. DVI-line break LOCA should be distinguished from the normal medium pipe break LOCA because one(1) train of HHIS is not available for DVI-line break. However, the conclusion in the discussion in the No.1.1 analysis can be applied to the DVI-line break LOCA because two(2) accumulators and one(1) SI pump are conservatively sufficient for core cooling in DVI-line break LOCA.
		Cold leg 4 inch break	1	1	4	4	-	MAAP4.0.6 PCT=643° F < 1400° F	
		Cold leg 4 inch break	1	0	4	4	-	MAAP4.0.6 PCT=643° F < 1400° F	

Table 19.1-15 Typical Results of Thermal/Hydraulic Analysis (Sheet 3 of 14)

No.	Objective of the analysis	Accident sequence description						Computer code and results	Insights from success criteria analysis
		Initiating event	SI pumps	Accumulators	EFW pumps	CS pumps	Other measures		
1.3	To judge the necessity of SG cooling by EFW for medium and small pipe break LOCA.	Hot leg 4 inch break	1	2	0	4	-	MAAP4.0.6 PCT=640° F < 1400° F	The results show that the cooling of SG secondary side with EFW is not necessary for LOCA whose break size is more than 2 inches. Therefore EFW is required only for LOCA whose break size is less than 2 inches.
		Hot leg 3 inch break	1	2	0	4	-	MAAP4.0.6 PCT=639° F < 1400° F	
		Hot leg 2 inch break	1	2	0	4	-	MAAP4.0.6 PCT=639° F < 1400° F	

Table 19.1-15 Typical Results of Thermal/Hydraulic Analysis (Sheet 4 of 14)

No.	Objective of the analysis	Accident sequence description						Computer code and results	Insights from success criteria analysis
		Initiating event	SI pumps	Accumul ators	EFW pumps	CS pumps	Other measures		
1.4	To check the duration of time before core uncovers under the condition that high head injection is not available for LOCA, i.e. to judge the margin for time in implementing alternate core cooling and in offsite power recovery.	Hot leg 8 inch break	0	4	4	4	-	MAAP4.0.6 The duration of time before core uncovers is 30min. PCT > 1400° F	The results show that it takes about 30 minutes from onset of the accident before core uncovers even when 8 inch break occurs. This indicates that alternate core cooling is expected within 30 minutes. When RCP seal LOCA occurs after onset of SBO or LOCCW, etc., the analysis results show that it takes about 2 hours from onset of RCP seal LOCA before core uncovers even in the largest leak. This indicates that, after RCP seal LOCA occurs, offsite power recovery is expected within 2 hours.
		Hot leg 2 inch break	0	4	4	4	-	MAAP4.0.6 The duration of time before core uncovers is 1.3hr. PCT > 1400° F	
		Hot leg 1 inch break	0	4	4	4	-	MAAP4.0.6 The duration of time before core uncovers is 5.4hr. PCT > 1400° F	

Table 19.1-15 Typical Results of Thermal/Hydraulic Analysis (Sheet 5 of 14)

No.	Objective of the analysis	Accident sequence description						Computer code and results	Insights from success criteria analysis
		Initiating event	SI pumps	Accumulators	EFW pumps	CS pumps	Other measures		
1.4		Cold leg 480 gpm/ loop leak	0	4	4	4	-	MAAP4.0.6 The duration of time before core uncovers is 2.4hr. PCT > 1400° F	
		Cold leg 300 gpm/ loop leak	0	4	4	4	-	MAAP4.0.6 The duration of time before core uncovers is 3.9hr. PCT > 1400° F	

Table 19.1-15 Typical Results of Thermal/Hydraulic Analysis (Sheet 6 of 14)

No.	Objective of the analysis	Accident sequence description						Computer code and results	Insights from success criteria analysis
		Initiating event	SI pumps	Accumul ators	EFW pumps	CS pumps	Other measures		
1.5	To judge effectiveness of coolant injection into RV using CS/ RHR pumps with SG cooling as alternate core cooling for LOCA.	Hot leg 8 inch break	0	4	4	0	Alternate core cooling : 1 CS/RHR pump and 4 MSRVs @10min	MAAP4.0.6 PCT=643° F < 1400° F	The results show that the core cooling can be maintained with alternate core cooling using one(1) CS/RHR pump within 30 minutes when break size is less than 8 inches. For small size break, the secondary side cooling is necessary to make the coolant injection into RV effective. This is achieved by opening three(3) MSRVs. As described above, it can be concluded that the success criteria for alternate core cooling are one(1) CS/ RHR pump and secondary side cooling by three(3) MSRVs within 30 minutes.
		Hot leg 8 inch break	0	4	4	0	Alternate core cooling : 1 CS/RHR pump and 4 MSRVs @30min	MAAP4.0.6 PCT=643° F < 1400° F	
		Hot leg 8 inch break	0	4	4	0	Alternate core cooling : 1 CS/RHR pump and 3 MSRVs @10min	MAAP4.0.6 PCT=643° F < 1400° F	
		Hot leg 2 inch break	0	4	4	0	Alternate core cooling : 1 CS/RHR pump and 4 MSRVs @10min	MAAP4.0.6 PCT=639° F < 1400° F	

Table 19.1-15 Typical Results of Thermal/Hydraulic Analysis (Sheet 7 of 14)

No.	Objective of the analysis	Accident sequence description						Computer code and results	Insights from success criteria analysis
		Initiating event	SI pumps	Accumul ators	EFW pumps	CS pumps	Other measures		
1.5		Hot leg 2 inch break	0	4	4	0	Alternate core cooling : 1 CS/RHR pump and 3 MSRVs @30min	MAAP4.0.6 PCT=639° F < 1400° F	
2.1	To judge required number of CS/ RHR pumps and heat exchangers as containment spray injection for LOCA.	Hot leg double ended guillotine break	4	4	4	1	-	MAAP4.0.6 C/V pressure is at most about 50 psia < 216 psia (containment ultimate pressure)	The results show that containment heat removal can be maintained with one(1) containment spray pump without an excessive increase of containment pressure for any size of break. Therefore the success criteria for the number of containment spray pumps are evaluated to be one(1) for any accident sequences.
		Hot leg 8 inch break	4	4	4	1	-	MAAP4.0.6 C/V pressure is at most about 50 psia < 216 psia	
		Hot leg 2 inch break	4	4	4	1	-	MAAP4.0.6 C/V pressure is at most about 50 psia < 216 psia	

Table 19.1-15 Typical Results of Thermal/Hydraulic Analysis (Sheet 8 of 14)

No.	Objective of the analysis	Accident sequence description						Computer code and results	Insights from success criteria analysis
		Initiating event	SI pumps	Accumulators	EFW pumps	CS pumps	Other measures		
2.2	To check the duration of time before containment pressure exceeds the containment ultimate pressure under the condition that containment spray injection is not available for small pipe break LOCA, i.e. to judge the margin for time in implementing alternate containment heat removal.	Hot leg 2 inch break	4	4	4	0	-	MAAP4.0.6 The duration of time before the C/V pressure exceeds twice the containment design pressure is 25hr. C/V pressure > 216 psia (containment ultimate pressure)	The results show that it takes more than 24 hours from onset of the accident before the containment pressure exceeds twice the containment design pressure for accident sequences with any break size. Because the containment ultimate pressure is higher than twice the containment design pressure, the time to containment ultimate pressure has a longer duration. This indicates that alternate containment heat removal is expected within 24 hours or more.
		Hot leg 1 inch break	4	4	4	0	-	MAAP4.0.6 The duration of time before the C/V pressure exceeds twice the containment design pressure is 30hr. C/V pressure > 216 psia	

Table 19.1-15 Typical Results of Thermal/Hydraulic Analysis (Sheet 9 of 14)

No.	Objective of the analysis	Accident sequence description						Computer code and results	Insights from success criteria analysis
		Initiating event	SI pumps	Accumulators	EFW pumps	CS pumps	Other measures		
2.3	To judge effectiveness of coolant injection into RV using CS/RHR pumps as alternate containment heat removal for LOCA.	Hot leg double ended guillotine break	4	4	4	0	Alternate containment heat removal : 1 CS/RHR pump @30min	MAAP4.0.6 C/V pressure is at most about 40 psia < 216 psia (containment ultimate pressure)	The results show that the containment heat removal can be maintained without excessive increase in containment pressure. In the medium and large pipe break LOCA sequences, containment heat removal is achieved by coolant injection into RV using one(1) CS/RHR pump. In the small pipe break LOCA sequence, although coolant injection into RV using CS/RHR pumps is not available because RCS pressure keeps relatively high due to operation of HHI, containment heat removal is possible by secondary side cooling with four(4) MSRVs opened.
		Hot leg 8 inch break	4	4	4	0	Alternate containment heat removal : 1 CS/RHR pump and 4 MSRVs @30min	MAAP4.0.6 C/V pressure is at most about 40 psia < 216 psia	

Table 19.1-15 Typical Results of Thermal/Hydraulic Analysis (Sheet 10 of 14)

No.	Objective of the analysis	Accident sequence description						Computer code and results	Insights from success criteria analysis
		Initiating event	SI pumps	Accumulators	EFW pumps	CS pumps	Other measures		
2.3		Hot leg 2 inch break	4	4	4	0	Alternate containment heat removal : 1 CS/RHR pump and 4 MSRVs @30min	MAAP4.0.6 C/V pressure is at most about 40 psia < 216 psia	As discussed in the No.1.5 analysis, if SI pumps are not available, coolant injection into RV using CS/RHR must be effective even in small pipe break LOCA sequences. Therefore the alternate containment heat removal by coolant injection into RV is judged to be effective for any accident sequences.
2.4	To judge effectiveness of containment cooling using containment fan cooler units as alternate containment heat removal for LOCA	Hot leg 8 inch break	4	4	4	0	Alternate containment cooling: 2 containment fan cooler units after 30min at Pd	MAAP4.0.6 C/V pressure is at most about 75 psia < 216 psia and decreasing	The alternate measure using containment fan cooler system for alternate containment cooling is judged to be effective. However, the success criterion of containment fan cooler units is assumed that two containment fan cooler units are required for success Note; Pd: Containment design Pressure
		Hot leg 8 inch break	4	4	4	0	Alternate containment cooling: 1 containment fan cooler unit after 30min at Pd	MAAP4.0.6 C/V pressure is at most about 100 psia < 216 psia and decreasing	

Table 19.1-15 Typical Results of Thermal/Hydraulic Analysis (Sheet 11 of 14)

No.	Objective of the analysis	Accident sequence description						Computer code and results	Insights from success criteria analysis
		Initiating event	SI pumps	Accumulators	EFW pumps	CS pumps	Other measures		
3.1	To judge required number of EFW pumps and SGs to which water is fed by EFW for loss of feedwater flow.	Loss of feedwater flow	0	4	1 pump to 1 SG	0	-	MAAP4.0.6 PCT=669° F < 1400° F	The results show that the core does not uncover and that the core cooling can be maintained with only one(1) train of EFWS. When water is fed to three(3) SGs by opening the cross-tie of EFWS, the core also does not uncover. In consideration of large uncertainties of MAAP analysis for the RV downcomer water mixture model, the success criteria for the number of SGs to be fed are assumed two(2), which is also applied to other initiating events because loss of feedwater flow is the most severe of the initiating events that require secondary side cooling.
		Loss of feedwater flow	0	4	1 pump to 3 SGs (open cross-tie)	0	-	MAAP4.0.6 PCT=671° F < 1400° F	

Table 19.1-15 Typical Results of Thermal/Hydraulic Analysis (Sheet 12 of 14)

No.	Objective of the analysis	Accident sequence description						Computer code and results	Insights from success criteria analysis
		Initiating event	SI pumps	Accumulators	EFW pumps	CS pumps	Other measures		
3.2	To judge required number of EFW pumps and SGs to which water is fed by EFW for station blackout.	Station blackout	0	4	1 pump to 1 SG	0	-	MAAP4.0.6 PCT=672° F < 1400° F	The results show that the accident progression of station blackout is similar to that of loss of feedwater flow from the viewpoint of secondary side cooling and that the core cooling can be maintained with only one(1) train of EFWS. Considering uncertainty, the success criteria are conservatively assumed to be the same as in case of loss of feedwater flow.

Table 19.1-15 Typical Results of Thermal/Hydraulic Analysis (Sheet 13 of 14)

No.	Objective of the analysis	Accident sequence description						Computer code and results	Insights from success criteria analysis
		Initiating event	SI pumps	Accumulators	EFW pumps	CS pumps	Other measures		
3.3	To check the duration of time before SGs are dried out under the condition that EFW is not available for loss of feedwater flow and station blackout, i.e. to judge the margin for time in implementing feed and bleed.	Loss of feedwater flow	0	4	0	0	-	MAAP4.0.6 The duration of time before core uncovers is 1.1 hr. PCT > 1400° F	The results show that it takes about 47 minutes and 1.1 hours from onset of the accident before SGs are dried out and before core uncovers, respectively, for loss of feedwater flow. The accident progression for station blackout is slower than for loss of feedwater flow from the analysis results. This indicates that there is sufficient time for implementing feed and bleed.
		Station blackout	0	4	0	0	-	MAAP4.0.6 The duration of time before core uncovers is 2.4 hr. PCT > 1400° F	

Table 19.1-15 Typical Results of Thermal/Hydraulic Analysis (Sheet 14 of 14)

No.	Objective of the analysis	Accident sequence description						Computer code and results	Insights from success criteria analysis
		Initiating event	SI pumps	Accumulators	EFW pumps	CS pumps	Other measures		
3.4	To judge effectiveness of feed and bleed for accident sequences without EFW.	Loss of feedwater flow	1	4	0	4	Feed and bleed : 1 SDV @SG dry out	MAAP4.0.6 PCT=1233° F < 1400° F	The results show that the core cooling can be maintained with the recovery of the water level in the core by implementing feed and bleed although the core uncovers temporarily before the RCS pressure decreases to the shut off pressure of HHI after the SDV opens. Therefore the success criteria for feed and bleed are assumed one(1) SDV and one(1) SI pump.

Table 19.1-16 List of Success Criteria (Sheet 1 of 26)
Large Pipe Break LOCA (>8 inches) Event Success Criteria

	Core injection function			Decay heat removal & containment heat removal function		
	Accumulator system	High head injection system	CS/RHR (Alternate core cooling)	CS/RHR (Containment spray) and CS/RHR (Heat removal)	CS/RHR (Alternate core cooling) (2) and CS/RHR (Heat removal)	Alternate containment cooling
1	2/3 ACCs(1)	2/4 SIPs (1)	-	1/4 CS/RHR pump and Hx	-	-
2	2/3 ACCs(1)	2/4 SIPs (1)	-	-	-	1/2 CCWPand 2/4 Containment fan cooler units

Note(1): RCS cold leg pipe break is assumed for large pipe break LOCA. Accumulator injection via the broken line is unavailable, and high head injection via DVI lines is available.

Note(2): Require operator action to change line-up to low pressure injection mode from CS/RHR(Containment spray) mode. For large pipe break LOCA, this mitigation system is assumed to be unavailable because there is not enough time to operate before core damage.

Table 19.1-16 List of Success Criteria (Sheet 2 of 26)
Medium Pipe Break LOCA (2 – 8 inches) Event Success Criteria

	Core injection function			Decay heat removal & containment heat removal function			
	Accumulator system	High head injection system	CS/RHR (Alternate core cooling) (2)	RCS depressurization by secondary side cooling	CS/RHR (Containment spray) and CS/RHR (Heat removal)	CS/RHR (Alternate core cooling) (2) and CS/RHR (Heat removal)	Alternate containment cooling
1	2/3 ACCs(3)	1/3 SIP (1)	-	-	1/4 CS/RHR pump and heat exchanger	-	-
2	2/3 ACCs(3)	1/3 SIP (1)	-	-	-	-	2/4 CCWPs and 2/4 Containment fan cooler units
3	2/3 ACCs(3)	1/3 SIP (1)	-	3/4 SGs and 3/4 EFW pumps and 3/4 MSRVs opened	-	1/3 CS/RHR pump and heat exchanger (3)	-
4	2/3 ACCs(3)	-	1/3 CS/RHR pump(3)	3/4 SGs and 3/4 EFW pumps and 3/4 MSRVs opened	-	1/3 CS/RHR pump and heat exchanger (3)	-
5	2/3 ACCs(3)	-	1/3 CS/RHR pump(3)	3/4 SGs and 3/4 EFW pumps and 3/4 MSRVs opened	-	-	2/4 CCWPs and 2/4 Containment fan cooler units

Note(1): DVI pipe break is assumed for high head injection system. High head injection via the broken line is unavailable.
Note(2): Require operator action to change line-up to low pressure injection mode from CS/RHR(Containment spray) mode.
Note(3): RCS cold leg pipe break is assumed for alternate core cooling and accumulator injection. Alternate core cooling and accumulator injection via the broken line is unavailable.

Table 19.1-16 List of Success Criteria (Sheet 3 of 26)
Small Pipe Break LOCA (1/2 – 2 inches) Event Success Criteria [1/3]

	Rector shutdown function	Core injection function			Decay heat removal & containment heat removal function					
	Reactor trip	Accumulator system	High head injection system	CS/RHR (Alternate core cooling) (2)	Heat removal via SGs	RCS depressurization by secondary side cooling	Safety depressurization valve	CS/RHR (Containment spray) and CS/RHR (Heat removal)	CS/RHR (Alternate core cooling) (2) and CS/RHR (Heat removal)	Alternate containment cooling
1	2/4 RPSs and 66/69 control rods OR 1/1 DAS and 66/69 control rods	-	1/3 SIP (1)	-	2/4 SGs and 2/4 EFW pumps OR 2/4 SGs and 1/4 EFW pump and isolation valves of pump discharge tie-line opened	-	-	1/4 CS/RHR pump and Hx	-	-
2	2/4 RPSs and 66/69 control rods OR 1/1 DAS and 66/69 control rods	-	1/3 SIP (1)	-	2/4 SGs and 2/4 EFW pumps OR 2/4 SGs and 1/4 EFW pump and isolation valves of pump discharge tie-line opened	-	-	-	-	1/2 CCWP and 2/4 Containment fan cooler units
3	2/4 RPSs and 66/69 control rods OR 1/1 DAS and 66/69 control rods	-	1/3 SIP (1)	1/4 CS/RHR pump and Hx(3)	2/4 SGs and 2/4 EFW pumps OR 2/4 SGs and 1/4 EFW pump and isolation valves of pump discharge tie-line opened	3/4 SGs and 3/4 EFW pumps and 3/4 MSDVs opened	-	-	1/4 CS/RHR pump and Hx(3)	-

Table 19.1-16 List of Success Criteria (Sheet 4 of 26)
Small Pipe Break LOCA (1/2 – 2 inches) Event Success Criteria [2/3]

	Rector shutdown function	Core injection function				Decay heat removal & containment heat removal function				
	Reactor trip	Accumulator system	High head injection system	CS/RHR (Alternate core cooling) (2)	Heat removal via SGs	RCS depressurization by secondary side cooling	Safety depressurization valve	CS/RHR (Containment spray) and CS/RHR (Heat removal)	CS/RHR (Alternate core cooling) (2) and CS/RHR (Heat removal)	Alternate containment cooling
4	2/4 RPSs and 66/69 control rods OR 1/1 DAS and 66/69 control rods	1/4 ACC (3)	-	1/4 CS/RHR pump and Hx(3)	2/4 SGs and 2/4 EFW pumps OR 2/4 SGs and 1/4 EFW pump and isolation valves of pump discharge tie-line opened	3/4 SGs and 3/4 EFW pumps and 3/4 MSDVs opened	-	-	1/4 CS/RHR pump and Hx(3)	-
5	2/4 RPSs and 66/69 control rods OR 1/1 DAS and 66/69 control rods	1/4 ACC (3)	-	1/4 CS/RHR pump and Hx(3)	2/4 SGs and 2/4 EFW pumps OR 2/4 SGs and 1/4 EFW pump and isolation valves of pump discharge tie-line opened	3/4 SGs and 3/4 EFW pumps and 3/4 MSDVs opened	-	-	-	1/2 CCWP and 2/4 Containment fan cooler units
6	2/4 RPSs and 66/69 control rods OR 1/1 DAS and 66/69 control rods	-	1/3 SIP (1)	-	-	-	1/2 SDV	1/4 CS/RHR pumps andHx	-	-

Table 19.1-16 List of Success Criteria (Sheet 5 of 26)
Small Pipe Break LOCA (1/2 – 2 inches) Event Success Criteria [3/3]

	Reactor trip	Accumulator system	High head injection system	CS/RHR (Alternate core cooling) (2)	Heat removal via SGs	RCS depressurization by secondary side cooling	Safety depressurization valve	CS/RHR (Containment spray) and CS/RHR (Heat removal)	CS/RHR (Alternate core cooling) (2) and CS/RHR (Heat removal)	Alternate containment cooling
7	2/4 RPSs and 66/69 control rods OR 1/1 DAS and 66/69 control rods	-	1/3 SIP (1)	-	-	-	1/2 SDV	-	-	1/2 CCWP and 2/4 Containment fan cooler units

Note(1): DVI pipe break is assumed for high head injection. High head injection via the broken line is unavailable.

Note(2): Require operator action to change line-up to low pressure injection mode from CS/RHR(Containment spray) mode.

Note(3): Even if RCS cold leg pipe break is assumed for alternate core cooling and accumulator injection, alternate core cooling and accumulator injection via RCS cold leg pipe is available because of a little spilled water.

Table 19.1-16 List of Success Criteria (Sheet 6 of 26)
Very Small Pipe Break LOCA (<1/2 inches) Event Success Criteria [1/4]

	Rector shutdown function	Core injection function			Decay heat removal & containment heat removal function					
	Reactor trip	Accumulator system	High head injection system OR Charging injection	CS/RHR (Alternate core cooling) (1)	Heat removal via SGs	RCS depressurization by secondary side cooling	Safety depressurization valve	CS/RHR (Containment spray) and CS/RHR (Heat removal)	CS/RHR (Alternate core cooling) (1) and CS/RHR (Heat removal)	Alternate containment cooling
1	2/4 RPSs and 66/69 control rods OR 1/1 DAS and 66/69 control rods	-	1/4 SIP OR 1/2 CHP	-	2/4 SGs and 2/4 EFW pumps OR 2/4 SGs and 1/4 EFW pump and isolation valves of pump discharge tie-line opened	-	-	1/4 CS/RHR pump and Hx	-	-
2	2/4 RPSs and 66/69 control rods OR 1/1 DAS and 66/69 control rods	-	1/4 SIP OR 1/2 CHP	-	2/4 SGs and 2/4 EFW pumps OR 2/4 SGs and 1/4 EFW pump and isolation valves of pump discharge tie-line opened	-	-	-	-	1/2 CCWP and 2/4 Containment fan cooler units

Table 19.1-16 List of Success Criteria (Sheet 7 of 26)
Very Small Pipe Break LOCA (<1/2 inches) Event Success Criteria [2/4]

	Rector shutdown function	Core injection function			Decay heat removal & containment heat removal function					
	Reactor trip	Accumulator system	High head injection system OR Charging injection	CS/RHR (Alternate core cooling) (1)	Heat removal via SGs	RCS depressurization by secondary side cooling	Safety depressurization valve	CS/RHR (Containment spray) and CS/RHR (Heat removal)	CS/RHR (Alternate core cooling) (1) and CS/RHR (Heat removal)	Alternate containment cooling
3	2/4 RPSs and 66/69 control rods OR 1/1 DAS and 66/69 control rods	-	1/4 SIP OR 1/2 CHP	1/4 CS/RHR pump and Hx	2/4 SGs and 2/4 EFW pumps OR 2/4 SGs and 1/4 EFW pump and isolation valves of pump discharge tie-line opened	3/4 SGs and 3/4 EFW pumps and 3/4 MSDVs opened	-	-	1/4 CS/RHR pump and Hx	-
4	2/4 RPSs and 66/69 control rods OR 1/1 DAS and 66/69 control rods	1/4 ACC	-	1/4 CS/RHR pump and Hx	2/4 SGs and 2/4 EFW pumps OR 2/4 SGs and 1/4 EFW pump and isolation valves of pump discharge tie-line opened	3/4 SGs and 3/4 EFW pumps and 3/4 MSDVs opened	-	-	1/4 CS/RHR pump and Hx	-

Table 19.1-16 List of Success Criteria (Sheet 8 of 26)
Very Small Pipe Break LOCA (<1/2 inches) Event Success Criteria [3/4]

	Rector shutdown function	Core injection function			Decay heat removal & containment heat removal function					
	Reactor trip	Accumulator system	High head injection system OR Charging injection	CS/RHR (Alternate core cooling) (1)	Heat removal via SGs	RCS depressurization by secondary side cooling	Safety depressurization valve	CS/RHR (Containment spray) and CS/RHR (Heat removal)	CS/RHR (Alternate core cooling) (1) and CS/RHR (Heat removal)	Alternate containment cooling
5	2/4 RPSs and 66/69 control rods OR 1/1 DAS and 66/69 control rods	1/4 ACC	-	1/4 CS/RHR pump and Hx	2/4 SGs and 2/4 EFW pumps OR 2/4 SGs and 1/4 EFW pump and isolation valves of pump discharge tie-line opened	3/4 SGs and 3/4 EFWs pumps and 3/4 MSDVs opened	-	-	-	1/2 CCWP and 2/4 Containment fan cooler units
6	2/4 RPSs and 66/69 control rods OR 1/1 DAS and 66/69 control rods	-	1/4 SIP	-	-	-	1/2 SDV	1/4 CS/RHR pump and Hx	-	-

Table 19.1-16 List of Success Criteria (Sheet 9 of 26)
Very Small Pipe Break LOCA (<1/2 inches) Event Success Criteria [4/4]

	Rector shutdown function	Core injection function			Decay heat removal & containment heat removal function					
	Reactor trip	Accumulator system	High head injection system OR Charging injection	CS/RHR (Alternate core cooling) (1)	Heat removal via SGs	RCS depressurization by secondary side cooling	Safety depressurization valve	CS/RHR (Containment spray) and CS/RHR (Heat removal)	CS/RHR (Alternate core cooling) (1) and CS/RHR (Heat removal)	Alternate containment cooling
7	2/4 RPSs and 66/69 control rods OR 1/1 DAS and 66/69 control rods	-	1/4 SIP	-	-	-	1/2 SDV	-	-	1/2 CCWP and 2/4 Containment fan cooler units

Note(1): Require operator action to change line-up to low pressure injection mode from CS/RHR(Containment spray) mode.

Table 19.1-16 List of Success Criteria (Sheet 10 of 26)
Steam Generator Tube Rupture Event Success Criteria [1/3]

	Condition		Rector shutdown function	Core injection function			Decay heat removal & containment heat removal function			
	Isolation of faulted SG (1)	Heat removal via SGs	Reactor trip	High head injection system	Safety depressurization valve	RCS depressurization by secondary side cooling (2) and RCS depressurization by SDV (3) and Injection control (4)	Heat removal via SGs	CS/RHR (Containment spray) and CS/RHR (Heat removal)	CS/RHR (RHR operation) (5) and CS/RHR (Heat removal)	Alternate containment cooling
1	Succeeded	Succeeded	66/69 control rods and 2/4 RPSs OR 1/1 DAS and 66/69 control rods	-	-	-	2/3 SGs and 2/3 EFW pumps OR 2/3 SGs and 1/4 EFW pump and isolation valves of pump discharge tie-line opened	-	-	-
2	Failed	Succeeded	66/69 control rods and 2/4 RPSs OR 1/1 DAS and 66/69 control rods	1/4 SIP	-	X	2/3 SGs and 2/3 EFW pumps OR 2/3 SGs and 1/4 EFW pump and isolation valves of pump discharge tie-line opened	-	1/4 CS/RHR pump and Hx	-

Table 19.1-16 List of Success Criteria (Sheet 11 of 26)
Steam Generator Tube Rupture Event Success Criteria [2/3]

	Condition		Rector shutdown function	Core injection function			Decay heat removal & containment heat removal function			
	Isolation of faulted SG (1)	Heat removal via SGs	Reactor trip	High head injection system	Safety depressurization valve	RCS depressurization by secondary side cooling (2) and RCS depressurization by SDV (3) and Injection control (4)	Heat removal via SGs	CS/RHR (Containment spray) and CS/RHR (Heat removal)	CS/RHR (RHR operation) (5) and CS/RHR (Heat removal)	Alternate containment cooling
3	Failed	Succeeded	66/69 control rods and 2/4 RPSs OR 1/1 DAS and 66/69 control rods	1/4 SIP	1/2 SDV	X	2/3 SGs and 2/3 EFW pumps OR 2/3 SGs and 1/4 EFW pump and isolation valves of pump discharge tie-line opened	1/4 CS/RHR pump and Hx	-	-
4	Failed	Succeeded	66/69 control rods and 2/4 RPSs OR 1/1 DAS and 66/69 control rods	1/4 SIP	1/2 SDV	X	2/3 SGs and 2/3 EFW pumps OR 2/3 SGs and 1/4 EFW pump and isolation valves of pump discharge tie-line opened	-	-	1/2 CCWP and 2/4 Containment fan cooler units

Table 19.1-16 List of Success Criteria (Sheet 12 of 26)
Steam Generator Tube Rupture Event Success Criteria [3/3]

	Condition		Rector shutdown function	Core injection function			Decay heat removal & containment heat removal function			
	Isolation of faulted SG (1)	Heat removal via SGs	Reactor trip	High head injection system	Safety depressurization valve	RCS depressurization by secondary side cooling (2) and RCS depressurization by SDV (3) and Injection control (4)	Heat removal via SGs	CS/RHR (Containment spray) and CS/RHR (Heat removal)	CS/RHR (RHR operation) (5) and CS/RHR (Heat removal)	Alternate containment cooling
5	Succeeded	Failed	66/69 control rods and 2/4 RPSs OR 1/1 DAS and 66/69 control rods	1/4 SIP	1/2 SDV	-	-	1/4 CS/RHR pump and Hx	-	-
6	Succeeded	Failed	66/69 control rods and 2/4 RPSs OR 1/1 DAS and 66/69 control rods	1/4 SIP	1/2 SDV	-	-	-	-	1/2 CCWP and 2/4 Containment fan cooler units

Note(1): Closing the following valves for faulted SG isolation, EFW isolation valve and {(main steam relief valve or main steam relief valve block valve) and (MSIV or turbine bypass valve) and main steam safety valve}.
Note(2): 1/3 SG and 1/3 EFW pumps and 1/3 MSRV opened, OR 1/3 SG and 1/4 EFW pumps and isolation valves of pump discharge tie-line opened and 1/3 MSRV opened
Note(3): 1/2 SDV
Note(4): 1/2 CHP and Injection control
Note(5): Requires operator action to change line-up to RHR operation mode

Table 19.1-16 List of Success Criteria (Sheet 13 of 26)
Steam Line Break Downstream MSIV Event Success Criteria

	Rector shutdown function	Decay heat removal function				Containment heat removal function	
	Reactor trip	Heat removal via SGs	Main steam line isolation	High head injection system	Safety depressurization valve	CS/RHR (Containment spray) and CS/RHR (Heat removal)	Alternate containment cooling
1	2/4 RPSs and 66/69 control rods OR 1/1 DAS and 66/69 control rods	2/4 SGs and 2/4 EFW pumps OR 2/4 SGs and 1/4 EFW pump and isolation valves of pump discharge tie-line opened	3/4 MSIVs closed	-	-	-	-
2	2/4 RPSs and 66/69 control rods OR 1/1 DAS and 66/69 control rods	-	-	1/4 SIP	1/2 SDV	1/4 CS/RHR pump and Hx	-
3	2/4 RPSs and 66/69 control rods OR 1/1 DAS and 66/69 control rods	-	-	1/4 SIP	1/2 SDV	-	1/2 CCWP and 2/4 Containment fan cooler units

Table 19.1-16 List of Success Criteria (Sheet 14 of 26)
Steam Line Break Upstream MSIV Event Success Criteria

	Rector shutdown function	Decay heat removal function				Containment heat removal function	
	Reactor trip	Heat removal via SGs	Main steam line isolation	High head injection system	Safety depressurization valve	CS/RHR (Containment spray) and CS/RHR (Heat removal)	Alternate containment cooling
1	2/4 RPSs and 66/69 control rods OR 1/1 DAS and 66/69 control rods	2/3 SGs and 2/3 EFW pumps OR 2/3 SGs and 1/4 EFW pump and isolation valves of pump discharge tie-line opened	3/3 intact loop MSIVs closed OR 1/1 broken loop Main steam check valve closed OR 1/1 broken loop MSIV closed	-	-	-	-
2	2/4 RPSs and 66/69 control rods OR 1/1 DAS and 66/69 control rods	-	-	1/4 SIP	1/2 SDV	1/4 CS/RHR pump and Hx	-
3	2/4 RPSs and 66/69 control rods OR 1/1 DAS and 66/69 control rods	-	-	1/4 SIP	1/2 SDV	-	1/2 CCWP and 2/4 Containment fan cooler units

Table 19.1-16 List of Success Criteria (Sheet 15 of 26)
Feedwater Line Break Event Success Criteria

	Rector shutdown function	Decay heat removal function				Containment heat removal function	
	Reactor trip	Heat removal via SGs	Main steam line isolation	High head injection system	Safety depressurization valve	CS/RHR (Containment spray) and CS/RHR (Heat removal)	Alternate containment cooling
1	2/4 RPSs and 66/69 control rods OR 1/1 DAS and 66/69 control rods	2/3 SGs and 2/3 EFW pumps OR 2/3 SGs and 1/4 EFW pump and isolation valves of pump discharge tie-line opened	3/3 intact loop MSIVs closed OR 1/1 broken loop Main steam check valve closed OR 1/1 broken loop MSIV closed	-	-	-	-
2	2/4 RPSs and 66/69 control rods OR 1/1 DAS and 66/69 control rods	-	-	1/4 SIP	1/2 SDV	1/4 CS/RHR pump and Hx	-
3	2/4 RPSs and 66/69 control rods OR 1/1 DAS and 66/69 control rods	-	-	1/4 SIP	1/2 SDV	-	1/2 CCWP and 2/4 Containment fan cooler units

Table 19.1-16 List of Success Criteria (Sheet 16 of 26)
General Transient Event Success Criteria

	Rector shutdown function	Decay heat removal function			Containment heat removal function	
	Reactor trip	Feed and Bleed	Heat removal via SGs	Main feed water recovery	CS/RHR (Containment spray) and CS/RHR (Heat removal)	Alternate containment cooling
1	2/4 RPSs and 66/69 control rods OR 1/1 DAS and 66/69 control rods	-	2/4 SGs and 2/4 EFW pumps OR 2/4 SGs and 1/4 EFW pump and isolation valves of pump discharge tie-line opened	-	-	-
2	2/4 RPSs and 66/69 control rods OR 1/1 DAS and 66/69 control rods	-	-	2/4 SGs and 1/4 MFW pump	-	-
3	2/4 RPSs and 66/69 control rods OR 1/1 DAS and 66/69 control rods	1/4 SIP and 1/2 SDV	-	-	1/4 CS/RHR pump and Hx	-
4	2/4 RPSs and 66/69 control rods OR 1/1 DAS and 66/69 control rods	1/4 SIP and 1/2 SDV	-	-	-	1/2 CCWP and 2/4 Containment fan cooler units

Table 19.1-16 List of Success Criteria (Sheet 17 of 26)
Loss of Feedwater Flow Event Success Criteria

	Rector shutdown function	Decay heat removal function		Containment heat removal function	
	Reactor trip	Heat removal via SGs	Feed and bleed	CS/RHR (Containment spray) and CS/RHR (Heat removal)	Alternate containment cooling
1	2/4 RPSs and 66/69 control rods OR 1/1 DAS and 66/69 control rods	2/4 SGs and 2/4 EFW pumps OR 2/4 SGs and 1/4 EFW pump and isolation valves of pump discharge tie-line opened	-	-	-
2	2/4 RPSs and 66/69 control rods OR 1/1 DAS and 66/69 control rods	-	1/4 SIP and 1/2 SDV	1/4 CS/RHR pump and Hx	-
3	2/4 RPSs and 66/69 control rods OR 1/1 DAS and 66/69 control rods	-	1/4 SIP and 1/2 SDV	-	1/2 CCWP and 2/4 Containment fan cooler units

Table 19.1-16 List of Success Criteria (Sheet 18 of 26)
Loss of Component Cooling Water Event Success Criteria

	Condition	Rector shutdown function	Core injection function	Decay heat removal function
	Stuck open safety valve LOCA(1)	Reactor trip	Alternate component cooling (Seal injection)(2)	Heat removal via SGs(3)
1	Not occurred	2/4 RPSs and 66/69 control rods OR 1/1 DAS and 66/69 control rods	1/2 CHIP and 1/2 Fire protection water pump OR 1/2 CHIP and 1/1 Non-essential chilled water pump	2/4 SGs and 2/2 EFW pumps OR 2/4 SGs and 1/2 EFW pump and isolation valves of pump discharge tie-line opened

Note(1): Occurrence of stuck open safety valve LOCA during this initiating event is assumed to result in core damage.
Note(2): RCP seal LOCA is assumed to occur, when alternate component cooling fails.
Note(3): Two motor-driven EFW pumps are unavailable in a loss of CCW event.

Table 19.1-16 List of Success Criteria (Sheet 19 of 26)
Partial Loss of Component Cooling Water Event Success Criteria [1/3]

	Condition	Rector shutdown function	Core injection function		Decay heat removal & containment heat removal function			
	Stuck open safety valve LOCA OR RCP seal LOCA (6)	Reactor trip	High head injection system(1) and Safety depressurization valve (2)	RCS depressurization by secondary side cooling(3) and Accumulator system(4) and CS/RHR (Alternate core cooling) (5)	Heat removal via SGs	CS/RHR (Containment spray) and CS/RHR (Heat removal)	CS/RHR (Alternate core cooling) and CS/RHR (Heat removal)	Alternate containment cooling
1	Not occurred	2/4 RPSs and 66/69 control rods OR 1/1 DAS and 66/69 control rods	-	-	2/4 SGs and 2/3 EFW pumps OR 2/4 SGs and 1/3 EFW pump and isolation valves of pump discharge tie-line opened	-	-	-
2	Occurred	2/4 RPSs and 66/69 control rods OR 1/1 DAS and 66/69 control rods	X	-	2/4 SGs and 2/3 EFW pumps OR 2/4 SGs and 1/3 EFW pump and isolation valves of pump discharge tie-line opened	1/2 CS/RHR pump and heat exchanger		

Table 19.1-16 List of Success Criteria (Sheet 20 of 26)
Partial Loss of Component Cooling Water Event Success Criteria [2/3]

	Condition	Rector shutdown function	Core injection function		Decay heat removal & containment heat removal function			
	Stuck open safety valve LOCA OR RCP seal LOCA (6)	Reactor trip	High head injection system(1) and Safety depressurization valve (2)	RCS depressurization by secondary side cooling(3) and Accumulator system(4) and CS/RHR (Alternate core cooling) (5)	Heat removal via SGs(7)	CS/RHR (Containment spray) and CS/RHR (Heat removal)	CS/RHR (Alternate core cooling) and CS/RHR (Heat removal)	Alternate containment cooling
3	Occurred	2/4 RPSs and 66/69 control rods OR 1/1 DAS and 66/69 control rods	X	-	2/4 SGs and 2/3 EFW pumps OR 2/4 SGs and 1/3 EFW pump and isolation valves of pump discharge tie-line opened	-	-	1/2 CCWP and 2/4 Containment fan cooler units
4	Occurred	2/4 RPSs and 66/69 control rods OR 1/1 DAS and 66/69 control rods	-	X	2/4 SGs and 2/3 EFW pumps OR 2/4 SGs and 1/3 EFW pump and isolation valves of pump discharge tie-line opened	-	1/2 CS/RHR pump and Hx	

Table 19.1-16 List of Success Criteria (Sheet 21 of 26)
Partial Loss of Component Cooling Water Event Success Criteria [3/3]

Note(1): 1/2 SIP
Note(2): 1/2 SDV
Note(3): 3/4 SG and 3/3 EFW pumps and 3/4 MSDV opened
Note(4): 1/4 ACC
Note(5): 1/2 CS/RHR pumps
Note(6): RCP seal LOCA is assumed to occur when RCP seal cooling by the stand-by charging pump fails.
Note(7): B-train motor-driven EFW pump is unavailable in a partial loss of CCW event.

Table 19.1-16 List of Success Criteria (Sheet 22 of 26)
Loss of Offsite Power Event Success Criteria [1/2]

	Condition	Rector shutdown function	Core injection function		Decay heat removal & containment heat removal function			
	Stuck open safety valve LOCA or RCP seal LOCA (4)	Reactor trip	Feed and Bleed	RCS depressurization by secondary side cooling (1) and Accumulator system (2) and CS/RHR (Alternate core cooling) (3)	Heat removal via SGs	CS/RHR (Containment spray) and CS/RHR (Heat removal)	CS/RHR (Alternate core cooling) and CS/RHR (Heat removal)	Alternate containment cooling
1	Not occurred	2/4 RPSs and 66/69 control rods OR 1/1 DAS and 66/69 control rods	-	-	2/4 SGs and 2/4 EFW pumps OR 2/4 SGs and 1/4 EFW pump and isolation valves of pump discharge tie-line opened	-	-	-
2	Occurred	2/4 RPSs and 66/69 control rods OR 1/1 DAS and 66/69 control rods	1/4 SIP and 1/2 SDV	-	2/4 SGs and 2/4 EFW pumps OR 2/4 SGs and 1/4 EFW pump and isolation valves of pump discharge tie-line opened	1/4 CS/RHR pump and Hx		

Table 19.1-16 List of Success Criteria (Sheet 23 of 26)
Loss of Offsite Power Event Success Criteria [2/2]

	Condition	Rector shutdown function	Core injection function		Decay heat removal & containment heat removal function			
	Stuck open safety valve LOCA or RCP seal LOCA (4)	Reactor trip	Feed and Bleed	RCS depressurization by secondary side cooling (1) and Accumulator system (2) and CS/RHR (Alternate core cooling) (3)	Heat removal via SGs	CS/RHR (Containment spray) and CS/RHR (Heat removal)	CS/RHR (Alternate core cooling) and CS/RHR (Heat removal)	Alternate containment cooling
3	Not occurred	2/4 RPSs and 66/69 control rods OR 1/1 DAS and 66/69 control rods	-	-	2/4 SGs and 2/4 EFW pumps OR 2/4 SGs and 1/4 EFW pump and isolation valves of pump discharge tie-line opened	-	-	-
4	Occurred	2/4 RPSs and 66/69 control rods OR 1/1 DAS and 66/69 control rods	1/4 SIP and 1/2 SDV	-	2/4 SGs and 2/4 EFW pumps OR 2/4 SGs and 1/4 EFW pump and isolation valves of pump discharge tie-line opened	1/4 CS/RHR pump and Hx		

Note(1): 3/4 SG and 3/4 EFW pumps and 3/4 MSDV opened
Note(2): 1/4 ACC
Note(3): 1/4 CS/RHR pumps
Note(4): RCP seal LOCA is assumed to occur when all CCW pumps fail to restart and alternate component cooling fails.

Table 19.1-16 List of Success Criteria (Sheet 24 of 26)
Loss of Vital AC Bus Event Success Criteria

	Core injection function	Decay heat removal & containment heat removal function			
	Feed and Bleed(1)	Heat removal via SGs(1)	Main feed water recovery	CS/RHR (Containment spray) and CS/RHR (Heat removal)(1)	Alternate containment cooling
1	-	2/4 SGs and 2/3 EFW pumps OR 2/4 SGs and 1/3 EFW pump and isolation valves of pump discharge tie-line opened	-	-	-
2	-	-	2/4s SG and 1/4 MFW pump	-	-
3	1/3 SIP and 1/2 SDV	-	-	1/3 CS/RHR pump and Hx	-
4	1/3 SIP and 1/2 SDV	-	-	-	1/2 CCWP and 2/4 Containment fan cooler units

Note(1): B-train 6.9kV switchgear is unavailable in this initiating event.

Table 19.1-16 List of Success Criteria (Sheet 25 of 26)
Loss of Vital DC Bus Event Success Criteria

	Core injection function	Decay heat removal & containment heat removal function			
	Feed and Bleed(1)	Heat removal via SGs(1)	Main feed water recovery	CS/RHR (Containment spray) and CS/RHR (Heat removal)(1)	Alternate containment cooling
1	-	2/4 SGs and 2/3 EFW pumps OR 2/4 SGs and 1/3 EFW pumps and isolation valves of pump discharge tie-line opened	-	-	-
2	-	-	2/4 SGs and 1/4 MFW pump	-	-
3	1/3 SIP and 1/2 SDV	-	-	1/3 CS/RHR pump and Hx	-
4	1/3 SIP and 1/2 SDV	-	-	-	1/2 CCWP and 2/4 Containment fan cooler units

Note(1): A-train DC switchboard is unavailable in this initiating event.

Table 19.1-16 List of Success Criteria (Sheet 26 of 26)
Anticipated transient without scram Event Success Criteria

	Reactivity control				RCS Pressure Control	
	Reactor trip	Turbine trip	Moderator temperature coefficient	Boric acid injection	Pressurizer Safety Valves	Heat removal via SGs
1	2/4 RPSs and 66/69 control rods OR DAS and 66/69 control rods	-	-	-		-
2	-	2/4 RPSs and 4 /4 turbine stop valves OR DAS and 4 /4 turbine stop valves	MTC within allowable range(95% of fuel cycle)	1/2 Boric acid transfer pump and 1/2 charging pump	4/4 Pressurizer Safety Valves open	4/4 SGs with 4/4 EFW pumps

Table 19.1-17 Component Random Failure Database for US-APWR (Mechanical) (Sheet 1 of 3)

ID	Description	Dist. Type	Mean	α	β	Data Source	Boundary
AVCD	Air-Operated Valve Fail to Close	β	1.2E-03 (/d)	1.0	8.3E+02	NUREG/CR-6928 Table 5-1	the valve, the valve operator (including the associated solenoid operated valves), local circuit breaker, and local instrumentation and control circuitry.
AVOM AVCM	Air-Operated Valve Spurious Operation	γ	2.0E-07 (/h)	0.3	1.5E+06	NUREG/CR-6928 Table 5-1	
AVEL	Air-Operated Valve External Leak Large	γ	9.0E-10 (/h)	0.3	3.3E+08	NUREG/CR-6928 Table 5-1	
AVIL	Air-Operated Valve Internal Leak Large	γ	5.0E-09 (/h)	0.3	6.0E+07	NUREG/CR-6928 Table 5-1	
CVCD	Check Valve Fail to Close	β	1.0E-04 (/d)	0.5	5.0E+03	NUREG/CR-6928 Table 5-1	the valve and no other supporting components
CVOD	Check Valve Fail to Open	β	1.2E-05 (/d)	0.5	4.2E+04	NUREG/CR-6928 Table 5-1	
CVEL	Check Valve External Leak Large	γ	2.0E-09 (/h)	0.3	1.5E+08	NUREG/CR-6928 Table 5-1	
CVIL	Check Valve Internal Leak Large	γ	3.0E-08 (/h)	0.3	1.0E+07	NUREG/CR-6928 Table 5-1	
CVPR	Check Valve Plug	γ	1.0E-07 (/h)	0.3	3.0E+06	NUREG/CR-3226 Table E-1	
MVFC	Motor-Operated Valve Fail to Control	γ	3.0E-06 (/h)	0.3	1.0E+05	NUREG/CR-6928 Table 5-1	the valve, the valve operator, local circuit breaker, and local instrumentation and control circuitry
MVOD MVCD	Motor-Operated Valve Fail to Open or Close	β	1.0E-03 (/d)	1.2	1.2E+03	NUREG/CR-6928 Table 5-1	
MVOM MVCM	Motor-Operated Valve Spurious Operation	γ	4.0E-08 (/h)	0.5	1.3E+07	NUREG/CR-6928 Table 5-1	
MVEL	Motor-Operated Valve External Leak Large	γ	1.0E-09 (/h)	0.3	3.0E+08	NUREG/CR-6928 Table 5-1	
MVIL	Motor-Operated Valve Internal Leak Large	γ	3.0E-09 (/h)	0.3	1.0E+08	NUREG/CR-6928 Table 5-1	
MVPR	Motor-Operated Valve Plug	γ	1.0E-07 (/h)	0.3	3.0E+06	NUREG/CR-3226 Table E-1	
RVCD	Power-Operated Relief Valve Fail to Close	β	1.0E-03 (/d)	0.5	5.0E+02	NUREG/CR-6928 Table 5-1	the valve, the valve operator, local circuit breaker, and local instrumentation and control circuitry
RVOD	Power-Operated Relief Valve Fail to Open	β	7.0E-03 (/d)	0.4	5.7E+01	NUREG/CR-6928 Table 5-1	
SVCD	Safety Valve Fail to Close	β	7.0E-05 (/d)	0.5	7.1E+03	NUREG/CR-6928 Table 5-1	the valve and the valve operator
SVOM	Safety Valve Spurious Operation (Open)	γ	2.0E-07 (/h)	0.3	1.5E+06	NUREG/CR-6928 Table 5-1	
XVOD XVCD	Manual Valve Fail to Open or Close	β	7.0E-04 (/d)	0.5	7.1E+02	NUREG/CR-6928 Table 5-1	the valve and valve operator
XVPR	Manual Valve Plug	γ	1.0E-07 (/h)	0.3	3.0E+06	NUREG/CR-3226 Table E-1	
XVEL	Manual Valve External Leak Large	γ	3.0E-09 (/h)	0.3	1.0E+08	NUREG/CR-6928 Table 5-1	
XVIL	Manual Valve Internal Leak Large	γ	1.2E-09 (/h)	0.3	2.5E+08	NUREG/CR-6928 Table 5-1	
TNEL	Tank Unpressurized External Leak Large	γ	2.0E-09 (/h)	0.3	1.5E+08	NUREG/CR-6928 Table 5-1	the tank
TKEL	Tank Pressurized External Leak Large	γ	3.0E-09 (/h)	0.3	1.0E+08	NUREG/CR-6928 Table 5-1	the tank
RHPR	Heat Exchanger Plug/Foul (RHR)	γ	6.0E-07 (/h)	1.5	2.5E+06	NUREG/CR-6928 Table 5-1	the heat exchanger shell and tubes
RHPF	Heat Exchanger (Plate Type) Plug/Foul (CCW)	γ	6.0E-08 (/h)	0.3	5.0E+06	One order of magnitude lower than for RHPR	
RXEL	Heat Exchanger Shell External Leak Large	γ	4.0E-09 (/h)	0.3	7.5E+07	NUREG/CR-6928 Table 5-1	
RIEL	Heat Exchanger Tube External Leak Large	γ	3.0E-08 (/h)	0.3	1.0E+07	NUREG/CR-6928 Table 5-1	
ORPR	Orifice Plug	γ	1.0E-06 (/h)	0.3	3.0E+05	NUREG/CR-6928 Table 5-1	the orifice
STPR	Strainer Plug	γ	7.0E-06 (/h)	0.3	4.3E+04	NUREG/CR-6928 Table 5-1	the strainer
SZPR	Spray nozzle Plug	γ	7.1E-08 (/h)	0.3	4.2E+06	PLG-0500	spray nozzle
PEEL	Piping Service Water System External Leak Large	γ	1.5E-10 (/h-feet)	0.3	2.0E+09	NUREG/CR-6928 Table 5-1	piping and pipe welds in each system. The flanges connecting piping segments are not included in the pipe component
PNEL	Piping Non-Service Water System External Leak Large	γ	2.5E-11 (/h-feet)	0.3	1.2E+10	NUREG/CR-6928 Table 5-1	piping and pipe welds in each system. The flanges connecting piping segments are not included in the pipe component

Table 19.1-17 Component Random Failure Database for US-APWR (Mechanical) (Sheet 2 of 3)

ID	Description	Dist. Type	Mean	α	β	Data Source	Boundary
PMYR	Motor-Driven Pump (Running) Fail to Run	γ	5.0E-06 (/h)	1.5	3.0E+05	NUREG/CR-6928 Table 5-1	the pump, motor, local circuit breaker, local lubrication or cooling systems, and local instrumentation and control circuitry
PMBD	Motor-Driven Pump (Running) Fail to Start	β	2.0E-03 (/d)	0.9	4.5E+02	NUREG/CR-6928 Table 5-1	
PCYR	CCW Motor-Driven Pump (Running) Fail to Run	γ	2.8E-06 (/h)	1.5	5.4E+05	NUREG/CR-6928 Table A.2.27-8. Alfa factor is taken from PMYR.	
PCBD	CCW Motor-Driven Pump (Running) Fail to Start	β	1.1E-03 (/d)	0.9	8.2E+02	NUREG/CR-6928 Table A.2.27-8. Alfa factor is taken from PMBD.	
PMSR	Motor-Driven Pump (Standby) Fail to Run During First Hour of Operation	γ	4.0E-04 (/h)	1.5	3.8E+03	NUREG/CR-6928 Table 5-1	
PMLR	Motor-Driven Pump (Standby) Fail to Run After First Hour of Operation	γ	6.0E-06 (/h)	0.5	8.3E+04	NUREG/CR-6928 Table 5-1	
PMAD	Motor-Driven Pump (Standby) Fail to Start	β	1.5E-03 (/d)	0.9	6.0E+02	NUREG/CR-6928 Table 5-1	
PMEL	Motor-Driven Pump External Leak Large	γ	8.0E-09 (/h)	0.3	3.8E+07	NUREG/CR-6928 Table 5-1	
PTSR	Turbine-Driven Pump (Standby) Fail to Run During First Hour of Operation	γ	2.5E-03 (/h)	0.8	3.2E+02	NUREG/CR-6928 Table 5-1	the pump, turbine, governor control, steam emission valve, local lubrication or cooling systems, and local instrumentation and controls
PTLR	Turbine-Driven Pump (Standby) Fail to Run After First Hour of Operation	γ	7.0E-05 (/h)	0.5	7.1E+03	NUREG/CR-6928 Table 5-1	
PTAD	Turbine-Driven Pump (Standby) Fail to Start	β	7.0E-03 (/d)	0.4	5.7E+01	NUREG/CR-6928 Table 5-1	
PTEL	Turbine-Driven Pump External Leak Large	γ	9.0E-09 (/h)	0.3	3.3E+07	NUREG/CR-6928 Table 5-1	
PDSR	Diesel-Driven Pump (Standby) Fail to Run During First Hour of Operation	γ	1.5E-03 (/h)	0.3	2.0E+02	NUREG/CR-6928 Table 5-1	the pump, diesel engine, local lubrication or cooling systems, and local instrumentation and control circuitry
PDLR	Diesel-Driven Pump (Standby) Fail to Run After First Hour of Operation	γ	9.0E-05 (/h)	0.3	3.3E+03	NUREG/CR-6928 Table 5-1	
PDAD	Diesel-Driven Pump (Standby) Fail to Start	β	4.0E-03 (/d)	0.3	7.5E+01	NUREG/CR-6928 Table 5-1	
PDEL	Diesel-Driven Pump External Leak Large	γ	1.5E-08 (/h)	0.3	2.0E+07	NUREG/CR-6928 Table 5-1	
CPYR	Motor-Driven Compressor (Running) Fail to Run	γ	9.0E-05 (/h)	1.5	1.7E+04	NUREG/CR-6928 Table 5-1	the compressor, motor, local circuit breaker, local lubrication or cooling systems, and local instrumentation and control circuitry.
FABD	Fan (Running) Fail to Start	β	2.0E-03 (/d)	0.3	1.5E+02	NUREG/CR-6928 Table 5-1	the fan, motor, local circuit breaker, local lubrication or cooling systems, and local instrumentation and control circuitry.
FASR	Fan (Standby) Fail to Run During First Hour of Operation	γ	2.0E-03 (/h)	0.3	1.5E+02	NUREG/CR-6928 Table 5-1	
FALR	Fan (Standby) Fail to Run After First Hour of Operation	γ	1.2E-04 (/h)	8.0	6.7E+04	NUREG/CR-6928 Table 5-1	
CTAD	Cooling Tower Fan (Standby) Fail to Start	β	2.5E-03 (/d)	0.5	2.0E+02	NUREG/CR-6928 Table 5-1	the fan, motor, local circuit breaker, local lubrication or cooling systems, and local instrumentation and control circuitry
CHYR	Chiller (Running) Fail to Run	γ	9.0E-05 (/h)	0.5	5.6E+03	NUREG/CR-6928 Table 5-1	the compressor, motor, local circuit breaker, local lubrication or cooling systems
CHAD	Chiller (Standby) Fail to Start	β	2.0E-03 (/d)	0.5	2.5E+02	NUREG/CR-6928 Table 5-1	

Table 19.1-17 Component Random Failure Database for US-APWR(Mechanical) (Sheet 3 of 3)

ID	Description	Dist. Type	Mean	α	β	Data Source	Boundary
DLSR	Gas Turbine Generator (Standby) Fail to Load and Run During First Hour of Operation	β	3.0E-03 (/d)	1.5	5.0E+02	NUREG/CR-6928 Table 5-1 Emergency Diesel Generator	the gas turbine and auxiliary systems
DLLR	Gas Turbine Generator (Standby) Fail to Run After First Hour of Operation	γ	8.0E-04 (/h)	2.0	2.5E+03	NUREG/CR-6928 Table 5-1 Emergency Diesel Generator	
DLAD	Gas Turbine Generator (Standby) Fail to Start	β	5.0E-03 (/d)	1.0	2.0E+02	NUREG/CR-6928 Table 5-1 Emergency Diesel Generator	
AXFF	RPS Breaker (Combined) Fail to Open or Close	β	1.5E-05 (/d)	0.5	3.3E+04	NUREG/CR-6928 Table 5-1	the entire trip breaker
DPCD	Pneumatic-Operated Damper Fail to Close	β	1.0E-03 (/d)	0.5	5.0E+02	NUREG/CR-6928 Table 5-1	the damper, the damper operator, any associated solenoid operated valves, and local instrumentation and control circuitry
DPOM	Pneumatic-Operated Damper Spurious Operation (Open)	γ	1.2E-07 (/h)	0.5	4.2E+06	NUREG/CR-6928 Table 5-1	
DPCM	Pneumatic-Operated Damper Spurious Operation (Close)	γ	1.2E-07 (/h)	0.5	4.2E+06	NUREG/CR-6928 Table 5-1	
SUPR	Containment Sump Plug During Operation	γ	1.0E-05 (/h)	0.3	3.0E+04	PLG-0500	Containment Sump
IGFF	Igniter Fail to Function	γ	1.9E-08 (/h)	0.3	1.6E+07	NPRD-95	Igniter Electric

Note - It is assumed that alpha factor for all kinds of valves and containment sump plugging are 0.3.

Table 19.1-18 Basic HEP Values for Type C Subtask Errors

Item	HEP	EF	Application Criteria		
			Stress Level	Task Type	Others
(1)	1.0	-	-	-	No written procedures are available
(2)	Var	-	-	-	If sufficient information can be obtained per task analysis, as described in Chapter 4 of NUREG/CR-1278, adjusted for the effects of dependence, stress, and other performance shaping factors(PSFs), and error recovery factors(RFs) per search scheme in Chapter 20. If this level of information cannot be obtained because of scheduling or other restrictions, use the remainder of this table.
(3)	0.02	5	Moderately High	Step By Step	
(4)	0.05	5	Moderately High	Dynamic	
			Extremely High	Step By Step	
(5)	0.25	5	Extremely High	Dynamic	

Table 19.1-19 Recovery Factors

Item	HEP	EF	Application Criteria		
			Stress Level	Task Type	Others
(6)	0.2	5	Moderately High	Step By Step	The second person can check the performance of the original performer.
(7)	0.5	5	Moderately High	Dynamic	The second person can check the performance of the original performer.
			Extremely High	Step By Step	The second person can check the performance of the original performer.
(8)	0.5	5	Extremely High	Dynamic	The second person can check the performance of the original performer.
(9)	Var	-	-	-	If there are error recovery factors (RFs) in addition to the use of human redundancy in items (6), (7), and (8), the influence of these RFs must be assessed separately. For annunciator RFs, use the annunciator Response Model.
(10)	0.001	10	-	-	Perform a post-diagnosis immediate emergency action for the reactor vessel/containment critical parameters, when (a) it can be judged to have been committed to memory, (b) it can be classified as skill-based actions, and (c) there is a backup written procedure. Assume no immediate RF from a second person for each action.

Table 19.1-20 Summary of US-APWR Front Line System Fault Tree Failure Probabilities

(Sheet 1 of 4)

Fault Tree Name	Fault Tree Description	Fault Tree Probability
Accumulator Injection System (ACC)		
ACC-0LL	Failure of ACC (2/3)	6.4E-06
ACC-0SL	Failure of ACC (1/4)	2.0E-06
High Head Injection System (HHIS)		
HPI-LL	Failure of SIS (2 OUT OF 4 DVI)	2.7E-04
HPI-ML	Failure of SIS (1 OUT OF 3 DVI)	1.8E-04
HPI-SL	Failure of SIS (1 OUT OF 4 DVI)	1.5E-04
HPI-SL-LP1	Failure of SIS (LOOP:LOSS OF OFFSITE POWER)	2.0E-04
HPI-SL-LP2	Failure of SIS (LOOP)	1.5E-04
HPI-SL-PC	Failure of SIS (PLOCW)	4.7E-04
Charging Injection System		
CHI-VS	Charging Injection System (VSLOCA : EFW Success)	3.2E-04
CS/RHR System (Containment Spray)		
RSS-CSS	Failure of Containment Spray Mode (Other Initiating Events)	1.3E-04
RSS-CSS-AC	Failure of Containment Spray (LOAC)	1.5E-04
RSS-CSS-DC	Failure of Containment Spray (LODC)	1.6E-04
RSS-CSS-LL	Failure of Containment Spray (LLOCA)	1.4E-04
RSS-CSS-LP1	Failure of Containment Spray (LOOP:LOSS OF OFFSITE POWER)	1.9E-04
RSS-CSS-LP2	Failure of Containment Spray (LOOP)	1.3E-04
RSS-CSS-PC	Failure of Containment Spray (PLOCW)	6.8E-04
CS/RHR System (Heat Removal : Containment Spray Success)		
RSS-CSS-HR	Failure of Heat Removal (Other Initiating Events)	2.1E-04
RSS-CSS-HR-AC	Failure of Heat Removal (LOAC)	2.4E-04
RSS-CSS-HR-DC	Failure of Heat Removal (LODC)	2.5E-04
RSS-CSS-HR-LL	Failure of Heat Removal (LLOCA)	2.2E-04
RSS-CSS-HR-LP1	Failure of Heat Removal (LOOP:LOSS OF OFFSITE POWER)	2.7E-04
RSS-CSS-HR-LP2	Failure of Heat Removal (LOOP)	2.1E-04
RSS-CSS-HR-PC	Failure of Heat Removal (PLOSW)	8.5E-04

Table 19.1-20 Summary of US-APWR Front Line System Fault Tree Failure Probabilities

(Sheet 2 of 4)

Fault Tree Name	Fault Tree Description	Fault Tree Probability
CS/RHR System (Heat Removal: Containment Spray Failure)		
RSS-RHR-HRLM	Failure of Heat Removal (MLOCA)	7.8E-03
RSS-RHR-HRLM-LL	Failure of Heat Removal (LLOCA)	7.8E-03
RSS-RHR-HRSL	Failure of Heat Removal (Other Initiating Events)	7.7E-03
RSS-RHR-HRSL-LP1	Failure of Heat Removal (LOOP:LOSS OF OFFSITE POWER)	7.8E-03
RSS-RHR-HRSL-LP2	Failure of Heat Removal (LOOP)	7.7E-03
RSS-RHR-HRSL-PC	Failure of Heat Removal (PLOSW)	8.5E-03
CS/RHR System (Alternate Core Cooling)		
RSS-RHR-LM	Failure of Heat Removal (MLOCA)	7.7E-03
RSS-RHR-SG	Failure of Heat Removal (SGTR)	7.8E-03
RSS-RHR-SL	Failure of Heat Removal (Other Initiating Events)	7.6E-03
RSS-RHR-SL-LP1	Failure of Heat Removal (LOOP:LOSS OF OFFSITE POWER)	7.7E-03
RSS-RHR-SL-LP2	Failure of Heat Removal (LOOP)	7.6E-03
RSS-RHR-SL-PC	Failure of Heat Removal (PLOSW)	8.3E-03
CS/RHR System (RHR Operation)		
RSS-RHR-HRSG	Failure of Heat Removal (SGTR)	7.9E-03
Emergency Feed Water System (EFW)		
EFW-AT	Failure of EFW (ATWS)	9.5E-02
EFW-LO-LP1	Failure of EFW (LOOP)	6.7E-05
EFW-LO-LP2	Failure of EFW (LOOP: SBO and loss of AAC)	1.6E-03
EFW-LO-LP3	Failure of EFW (LOOP: Total Loss of ac Power)	1.6E-03
EFW-SB	Failure of EFW (SLB Inside CV)	4.1E-05
EFW-SG	Failure of EFW (SGTR)	4.1E-05
EFW-SL	Failure of EFW (Other Initiating Events Including General Transients and Loss of Main Feed Water)	3.1E-05
EFW-SL-AC	Failure of EFW (LOAC)	3.5E-04
EFW-SLBO	Failure of EFW (SLB Outside CV)	3.3E-04
EFW-SL-DC	Failure of EFW (LODC)	3.4E-05
EFW-SL-LC	Failure of EFW (LOCWS)	1.6E-03
EFW-SL-PC	Failure of EFW (PLOCW)	3.5E-04

Table 19.1-20 Summary of US-APWR Front Line System Fault Tree Failure Probabilities

(Sheet 3 of 4)

Fault Tree Name	Fault Tree Description	Fault Tree Probability
HHI System and Pressurizes Pressure Control System		
HPI-FAB	Failure of Bleed and Feed operation	4.1E-03
HPI-FAB-AC	Failure of Bleed and Feed operation (LOAC)	4.1E-03
HPI-FAB-DC	Failure of Bleed and Feed operation (LODC)	4.1E-03
HPI-FAB-LP1	Failure of Bleed and Feed operation (LOOP)	4.2E-03
HPI-FAB-LP2	Failure of Bleed and Feed operation (LOOP)	4.1E-03
Pressurizes Pressure Control System		
PZR-FAB	Failure of Bleed operation (Other Initiating Events)	2.7E-03
PZR-SGT	Failure of Decompress RCS (SGTR)	6.3E-03
Alternate Containment Cooling		
NCC	Failure of Alternate Containment Cooling (Other Initiating Events)	2.9E-02
NCC-AC	Failure of Alternate Containment Cooling (LOAC)	2.9E-02
NCC-DC	Failure of Alternate Containment Cooling (LODC)	3.2E-02
NCC-LL	Failure of Alternate Containment Cooling (LLOCA)	2.9E-02
NCC-LP1	Failure of Alternate Containment Cooling (LOOP)	5.2E-02
NCC-LP2	Failure of Alternate Containment Cooling (LOOP: No breakdown)	2.9E-02
NCC-PC	Failure of Alternate Containment Cooling (PLOCW)	2.9E-02
Secondary Side Cooling (Main Steam Control System and Emergency Feed Water System)		
MSP-LO-LP1	Failure of Secondary Side Cooling (LOOP : Emergency Power Success)	1.6E-02
MSP-LO-LP2	Failure of Secondary Side Cooling (LOOP : Emergency Power Success)	6.8E-03
MSP-SG	Failure of Secondary Side Cooling (SGTR)	2.6E-03
MSP-SL	Failure of Secondary Side Cooling (Other Initiating Events)	7.0E-03
MSP-SL-PC	Failure of Secondary Side Cooling (PLOCW)	5.0E-02
Reactor Trip		
RTP-LO	Failure of Reactor Trip (LOOP)	1.0E-07
RTP-MF	Failure of Reactor Trip (Other Initiating Events)	1.5E-07

Table 19.1-20 Summary of US-APWR Front Line System Fault Tree Failure Probabilities

(Sheet 4 of 4)

Fault Tree Name	Fault Tree Description	Fault Tree Probability
Main Steam isolation		
MSR-O-00	Failure of Main Steam isolation (SLBO)	6.3E-04
MSR-I-00	Failure of Main Steam isolation (SLBI, FWLB)	4.4E-08
Isolate Rupture SG		
MSP-OS	Failure of Isolate Rupture SG (SGTR)	2.1E-05
Class 1E GTG		
OPS	Failure of All Class 1E GTG (LOOP)	3.9E-05
Alternative GTG Power		
SDG	Failure of Alternative GTG Power (LOOP)	2.5E-02
Alternate CCW		
ACW	Failure of Alternate CCW	6.7E-03
ACW-LP1	Failure of Alternate CCW (LOOP)	8.2E-03
ACW-LP2	Failure of Alternate CCW (LOOP: Alternative GTG)	8.2E-03
SEC-PLOCW	Failure of Alternative GTG Power (LOCWS)	4.6E-03
CCW Re-Start		
CWS-R2	Failure of CCW Re-Start (Alternative GTG)	2.7E-02
CWS-R4-LP1	Failure of CCW Re-Start (LOOP)	2.2E-04
CWS-R4-LP2	Failure of CCW Re-Start (LOOP : No breakdown)	1.7E-04
Other Headings		
HIT	Failure of Injection Control (SGTR)	2.7E-02
MFW	Failure of Main Water System Recovery (TRANS ,LOAC, LODC)	1.0E-01
RCP-SEAL	RCP Seal LOCA Occurs	1.0E+00
POV	Safety Relief Valve LOCA Occurs	2.8E-04
PRB	Failure of Power Recovery (1 hour) (LOOP)	5.3E-01
PRC	Failure of Power Recovery (3 hours) (LOOP)	4.1E-01
IE-CCW-SWS	LOCWS IE (LOCWS)	2.4E-05
TTP	Failure of Turbine Trip	1.0E-02
MTC	Moderator Temperature Coefficient	5.0E-02
PZS	Failure of Pressurizer Safety Valve Operation	1.0E-02
EBI	Failure of Boric Acid Transfer	2.6E-02

Table 19.1-21 Summary of US-APWR Support System Fault Tree Failure Probabilities (Sheet 1 of 3)

Fault Tree Name	Fault Tree Description	Fault Tree Probability
RWSP		
RWS	RWSP	1.1E-05
Heating Ventilation and Conditioning System		
HVA-EFW-A	EFW area HVAC B Train	4.4E-02
HVA-EFW-B	EFW area HVAC C Train	8.9E-03
Component Cooling Water System		
CWS-00A	A Train	7.4E-04
CWS-00B	B Train	3.1E-02
CWS-00C	C Train	9.6E-04
CWS-00D	D Train	3.1E-02
CWS-VS-00A1	Charging Pump Cooling A Train	6.5E-05
CWS-VS-00C1	Charging Pump Cooling C Train	7.2E-05
Essential Service Water System		
SWS-01A	A Train	6.0E-04
SWS-01B	B Train	1.7E-02
SWS-01C	C Train	8.2E-04
SWS-01D	D Train	1.7E-02
ECCS Actuation Signal		
SGN-SA	A Train	1.1E-03
SGN-SB	B Train	1.1E-03
SGN-SC	C Train	1.1E-03
SGN-SD	D Train	1.1E-03
ECCS Actuation Signal (Manual DAS Failure)		
SGN-SA-DAS	A Train	7.2E-05
SGN-SB-DAS	B Train	7.2E-05
SGN-SC-DAS	C Train	7.2E-05
SGN-SD-DAS	D Train	7.2E-05
Containment Spray Actuation Signal		
SGN-PA	A Train	1.2E-03
SGN-PB	B Train	1.2E-03
SGN-PC	C Train	1.2E-03
SGN-PD	D Train	1.2E-03

Table 19.1-21 Summary of US-APWR Support System Fault Tree Failure Probabilities (Sheet 2 of 3)

Fault Tree Name	Fault Tree Description	Fault Tree Probability
A (B-D) Class 1E 6.9kV Bus		
EPS-69KA	A Train	2.5E-05
EPS-69KB	B Train	2.4E-04
EPS-69KC	C Train	2.4E-04
EPS-69KD	D Train	2.5E-05
Non-Class 1E 6.9kV Bus		
EPS-69KA-P1	A Train (Power Source only AAC)	6.5E-02
EPS-69KD-P2	D Train (Power Source only AAC)	6.5E-02
A (B-D) Class 1E 480V Load Center Bus		
EPS-480A	A Train	4.5E-05
EPS-480B	B Train	2.6E-04
EPS-480C	C Train	2.6E-04
EPS-480D	D Train	4.5E-05
Non-Class 1E 480V Load Center Bus		
EPS-480A-P1	A Train (Power Source only AAC)	6.5E-02
EPS-480D-P2	D Train (Power Source only AAC)	6.5E-02
A1 (D1) Class 1E 480V Load Center Bus		
EPS-48A1	A1 Train	5.8E-05
EPS-48D1	D1 Train	5.8E-05
A (B-D) Class 1E 480V Motor Control Center Bus		
EPS-MCA	A Train	5.5E-05
EPS-MCB	B Train	2.7E-04
EPS-MCC	C Train	2.7E-04
EPS-MCD	D Train	5.5E-05
Non Class 1E 480V Motor Control Center Bus		
EPS-MCA-P1	A Train (Power Source only AAC)	6.5E-02
EPS-MCD-P2	D Train (Power Source only AAC)	6.5E-02
A1 (D1) Class 1E 480V Motor Control Center Bus		
EPS-MCA1	A1 Train	6.7E-05
EPS-MCD1	D1 Train	6.7E-05

Table 19.1-21 Summary of US-APWR Support System Fault Tree Failure Probabilities (Sheet 3 of 3)

Fault Tree Name	Fault Tree Description	Fault Tree Probability
A (B-D) DC Switchboard		
EPS-SBA	A Train	5.8E-06
EPS-SBB	B Train	5.8E-06
EPS-SBC	C Train	5.8E-06
EPS-SBD	D Train	5.8E-06
EPS-SBA-P1	A Train (Power Source only AAC)	6.2E-06
EPS-SBD-P2	D Train (Power Source only AAC)	6.2E-06
A1 (D1) DC Switchboard		
EPS-SBA1	A Train	1.8E-05
EPS-SBD1	D Train	1.8E-05
MOV 480V MCC Bus		
EPSMVMC1A	A Train	6.2E-06
EPSMVMCB	B Train	6.3E-06
EPSMVMCC	C Train	6.2E-06
EPSMVMC1D	D Train	6.3E-06
I&C Penelboard		
EPS-VITALA	A Train	5.8E-06
EPS-VITALB	B Train	6.5E-06
EPS-VITALC	C Train	6.5E-06
EPS-VITALD	D Train	5.8E-06
I&C Penelboard (No VITAL POWER)		
EPS-VITALA-L	A Train	1.5E-04
EPS-VITALB-L	B Train	1.5E-04
EPS-VITALC-L	C Train	1.5E-04
EPS-VITALD-L	D Train	1.5E-04
Non-Class 1E 6.9kV Bus		
EPS-P1-69K	P1 Train	2.4E-04
EPS-P2-69K	P2 Train	2.4E-04
Non-Class 1E Load Center Bus		
EPS-P1-480	P1 Train	2.6E-04
EPS-P2-480	P2 Train	2.6E-04
Non-Class 1E 480V Motor Control Center Bus		
EPS-P11-MC	P11 Train	2.7E-04
EPS-P21-MC	P21 Train	2.7E-04

Table 19.1-22 Core Damage for At-Power Events Contribution of Initiating Events to Plant Core Damage Frequency

Initiating Event	Initiating Event Description	CDF (/RY)	Percent Contribution
LLOCA	Large Pipe Break LOCA	3.3E-10	0.0%
MLOCA	Medium Pipe Break LOCA	1.6E-08	1.5%
SLOCA	Small Pipe Break LOCA	7.6E-08	7.4%
VSLOCA	Very Small Pipe Break LOCA	1.1E-09	0.1%
SGTR	Steam Generator Tube Rupture	1.1E-08	1.0%
RVR	Reactor Vessel Rupture	1.0E-07	9.7%
SLBO	Steam Line Break/Leak (Downstream MSIV : Turbine Side)	3.6E-08	3.5%
SLBI	Steam Line Break/Leak (Upstream MSIV : CV Side)	1.7E-10	0.0%
FWLB	Feedwater Line Break	6.0E-10	0.1%
TRANS	General Transient	1.9E-08	1.9%
LOFF	Loss of Feedwater Flow	2.6E-08	2.5%
LOCCW	Loss of Component Cooling Water	2.1E-07	20.5%
PLOCW	Partial Loss of Component Cooling Water	1.6E-08	1.6%
LOOP	Loss of Offsite Power	4.7E-07	45.4%
ATWS	ATWS	4.6E-08	4.5%
LOAC	Loss of Vital AC Bus	2.2E-09	0.2%
LODC	Loss of Vital DC Bus	6.7E-11	0.0%
TOTAL =		1.0E-06	

Table 19.1-23 Core Damage for At-Power Events – Conditional Core Damage Probability Given Initiating Event Occurrence

	Initiating Event	CDF (/RY)	Percent Contribution	Initiating Event Frequency (/RY)	CCDP
1	LOOP	4.7E-07	45.4%	4.0E-02	1.2E-05
2	LOCCW	2.1E-07	20.5%	2.4E-05	8.6E-03
3	RVR	1.0E-07	9.7%	1.0E-07	1.0E+00
4	SLOCA	7.6E-08	7.4%	3.6E-03	2.1E-05
5	ATWS	4.6E-08	4.5%	1.0E+00	4.6E-08
6	SLBO	3.6E-08	3.5%	1.0E-02	3.6E-06
7	LOFF	2.6E-08	2.5%	1.9E-01	1.4E-07
8	TRANS	1.9E-08	1.9%	8.0E-01	2.4E-08
9	PLOCW	1.6E-08	1.6%	3.2E-03	5.0E-06
10	MLOCA	1.6E-08	1.5%	5.0E-04	3.2E-05
11	SGTR	1.1E-08	1.0%	4.0E-03	2.7E-06
12	LOAC	2.2E-09	0.2%	9.0E-03	2.4E-07
13	VSLOCA	1.1E-09	0.1%	1.5E-03	7.1E-07
14	FWLB	6.0E-10	0.1%	3.4E-03	1.8E-07
15	LLOCA	3.3E-10	0.0%	1.2E-06	2.7E-04
16	SLBI	1.7E-10	0.0%	1.0E-03	1.7E-07
17	LODC	6.7E-11	0.0%	1.2E-03	5.7E-08
TOTAL		1.0E-06		2.1E+00	

Table 19.1-24 US-APWR PRA Dominant Core Damage Frequency Sequence (Sheet 1 of 6)

Rank	Sequence ID	Sequence Name	Sequence Frequency (/RY)	Percent Contrib.	Percent Contrib. Total
1	19LOOP_C-0048	19LOOP_C-OPS-ADG-PRB-PRC-SEL	3.4E-07	33.0%	33.0%
2	15LOCCW-0003	15LOCCW-SCA-SEL	1.7E-07	16.0%	49.0%
3	07RVR-0001	07RVR-	1.0E-07	9.7%	58.7%
4	19LOOP_A-0004	19LOOP_A-CWR-SCO1-SEL	9.0E-08	8.7%	67.4%
5	15LOCCW-0006	15LOCCW-EFA-SEL	4.0E-08	3.8%	71.2%
6	03SLOCA-0027	03SLOCA-HIB-CSA-CRB	3.9E-08	3.8%	75.0%
7	14LOFF-0007	14LOFF-EFA-FBA	2.5E-08	2.4%	77.4%
8	10SLBO-0017	10SLBO-MSO-BLA	2.4E-08	2.3%	79.8%
9	20ATWS-0007	20ATWS-RTA-TTP	2.4E-08	2.3%	82.0%
10	13TRANS-0008	13TRANS-EFA-MFW-FBA1	1.7E-08	1.7%	83.7%
11	03SLOCA-0012	03SLOCA-HIB-SRA	1.2E-08	1.2%	84.9%
12	20ATWS-0004	20ATWS-RTA-EFE	1.2E-08	1.2%	86.1%
13	19LOOP_A-0048	19LOOP_A-EFO-FBA2	1.1E-08	1.1%	87.2%
14	10SLBO-0028	10SLBO-HIC-MSO	8.8E-09	0.9%	88.0%
15	03SLOCA-0003	03SLOCA-CXB-FNA2	8.8E-09	0.9%	88.9%
16	03SLOCA-0017	03SLOCA-HIB-CRB	7.9E-09	0.8%	89.6%
17	15LOCCW-0004	15LOCCW-SRV	6.8E-09	0.7%	90.3%
18	16PLOCW-0030	16PLOCW-SCK-SEL-HIC-CSA-CRB2-FNA7	6.5E-09	0.6%	90.9%

Table 19.1-24 US-APWR PRA Dominant Core Damage Frequency Sequence (Sheet 2 of 6)

Rank	Sequence ID	Sequence Name	Sequence Frequency (/RY)	Percent Contrib.	Percent Contrib. Total
19	20ATWS-0006	20ATWS-RTA-MTC	6.2E-09	0.6%	91.5%
20	19LOOP_C-0006	19LOOP_C-OPS-ADG-CWR-SCO1-SEL	5.8E-09	0.6%	92.1%
21	02MLOCA-0036	02MLOCA-HIB-CSA-CRD	5.4E-09	0.5%	92.6%
22	03SLOCA-0010	03SLOCA-CSA-CRB-FNA2	5.3E-09	0.5%	93.1%
23	19LOOP_B-0005	19LOOP_B-OPS-CWR-SCO1-SEL	4.6E-09	0.4%	93.6%
24	02MLOCA-0026	02MLOCA-HIB-CRD	4.2E-09	0.4%	94.0%
25	05SGTR-0010	05SGTR-SGI-HT	4.1E-09	0.4%	94.4%
26	03SLOCA-0028	03SLOCA-HIB-CSA-CRB-FNA2	4.1E-09	0.4%	94.8%
27	19LOOP_C-0046	19LOOP_C-OPS-ADG-PRB-CWR-SEL	3.9E-09	0.4%	95.2%
28	19LOOP_B-0049	19LOOP_B-OPS-EFO-FBA2	3.5E-09	0.3%	95.5%
29	20ATWS-0003	20ATWS-RTA-EBI	3.2E-09	0.3%	95.8%
30	02MLOCA-0011	02MLOCA-ACA	3.2E-09	0.3%	96.1%
31	16PLOCW-0019	16PLOCW-SCK-SEL-HIC-CRB2	3.0E-09	0.3%	96.4%
32	16PLOCW-0082	16PLOCW-EFA-BLA	3.0E-09	0.3%	96.7%
33	05SGTR-0012	05SGTR-SGI-SRB	2.8E-09	0.3%	97.0%
34	05SGTR-0011	05SGTR-SGI-PZR	2.2E-09	0.2%	97.2%
35	21LOAC-0008	21LOAC-EFA-MFW-FBA1	2.1E-09	0.2%	97.4%
36	19LOOP_A-0042	19LOOP_A-SRV-CWR	1.9E-09	0.2%	97.6%

Table 19.1-24 US-APWR PRA Dominant Core Damage Frequency Sequence (Sheet 3 of 6)

Rank	Sequence ID	Sequence Name	Sequence Frequency (/RY)	Percent Contrib.	Percent Contrib. Total
37	10SLBO-0016	10SLBO-MSO-CSA-FNA6	1.8E-09	0.2%	97.8%
38	19LOOP_A-0054	19LOOP_A-EFO-CWR-SEL	1.7E-09	0.2%	97.9%
39	19LOOP_D-0017	19LOOP_D-OPS-ADG-EFO-PRB-SEL	1.7E-09	0.2%	98.1%
40	13TRANS-0007	13TRANS-EFA-MFW-CSA-FNA4	1.6E-09	0.2%	98.2%
41	16PLOCW-0012	16PLOCW-SCK-SEL-CSA-CRB2-FNA7	1.6E-09	0.2%	98.4%
42	20ATWS-0005	20ATWS-RTA-PZS	1.2E-09	0.1%	98.5%
43	02MLOCA-0003	02MLOCA-CXC-FNA1	1.2E-09	0.1%	98.6%
44	19LOOP_B-0053	19LOOP_B-OPS-EFO-FBA2-CSA-FNA9	1.0E-09	0.1%	98.7%
45	04VSLOCA-0020	04VSLOCA-CHI-HIF-CSA-CRB1-FNA5	9.2E-10	0.1%	98.8%
46	05SGTR-0009	05SGTR-SGI-CRA-BLA1	8.5E-10	0.1%	98.9%
47	10SLBO-0007	10SLBO-EFB-BLA	8.4E-10	0.1%	99.0%
48	02MLOCA-0021	02MLOCA-HIB-SRA	8.3E-10	0.1%	99.1%
49	19LOOP_B-0048	19LOOP_B-OPS-EFO-CSA-FNA9	8.3E-10	0.1%	99.1%
50	02MLOCA-0010	02MLOCA-CSA-CRD-FNA1	7.2E-10	0.1%	99.2%
51	16PLOCW-0029	16PLOCW-SCK-SEL-HIC-CSA-CRB2	6.7E-10	0.1%	99.3%
52	02MLOCA-0037	02MLOCA-HIB-CSA-CRD-FNA1	5.7E-10	0.1%	99.3%
53	16PLOCW-0014	16PLOCW-SCK-SEL-HIC-SRA2	5.4E-10	0.1%	99.4%
54	05SGTR-0018	05SGTR-EFC-BLA1	5.2E-10	0.1%	99.4%

Table 19.1-24 US-APWR PRA Dominant Core Damage Frequency Sequence (Sheet 4 of 6)

Rank	Sequence ID	Sequence Name	Sequence Frequency (/RY)	Percent Contrib.	Percent Contrib. Total
55	16PLOCW-0087	16PLOCW-EFA-HIC	4.6E-10	0.0%	99.5%
56	12FWLB-0007	12FWLB-EFD-BLA	4.4E-10	0.0%	99.5%
57	13TRANS-0012	13TRANS-EFA-MFW-FBA1-CSA-FNA4	4.1E-10	0.0%	99.6%
58	14LOFF-0006	14LOFF-EFA-CSA-FNA3	4.0E-10	0.0%	99.6%
59	03SLOCA-0043	03SLOCA-EFA-BLA	3.1E-10	0.0%	99.6%
60	14LOFF-0011	14LOFF-EFA-FBA-CSA-FNA3	3.0E-10	0.0%	99.7%
61	01LLOCA-0021	01LLOCA-HIA-CRC	2.9E-10	0.0%	99.7%
62	19LOOP_C-0087	19LOOP_C-OPS-ADG-SRV-PRB	2.3E-10	0.0%	99.7%
63	19LOOP_B-0055	19LOOP_B-OPS-EFO-CWR-SEL	2.2E-10	0.0%	99.7%
64	19LOOP_D-0015	19LOOP_D-OPS-ADG-EFO-CWR-SEL	2.1E-10	0.0%	99.8%
65	16PLOCW-0005	16PLOCW-SCK-SEL-CXB2-FNA7	1.9E-10	0.0%	99.8%
66	10SLBO-0032	10SLBO-HIC-MSO-CSA-FNA6	1.6E-10	0.0%	99.8%
67	05SGTR-0022	05SGTR-HIC-EFC	1.6E-10	0.0%	99.8%
68	11SLBI-0007	11SLBI-EFD-BLA	1.3E-10	0.0%	99.8%
69	19LOOP_A-0031	19LOOP_A-SRV-HIK-CSA-CRB3	1.3E-10	0.0%	99.8%
70	04VSLOCA-0035	04VSLOCA-EFA-BLA	1.3E-10	0.0%	99.8%
71	16PLOCW-0095	16PLOCW-EFA-HIC-CSA-CRB2-FNA7	1.3E-10	0.0%	99.8%
72	19LOOP_A-0047	19LOOP_A-EFO-CSA-FNA9	1.1E-10	0.0%	99.9%

Table 19.1-24 US-APWR PRA Dominant Core Damage Frequency Sequence (Sheet 5 of 6)

Rank	Sequence ID	Sequence Name	Sequence Frequency (/RY)	Percent Contrib.	Percent Contrib. Total
73	10SLBO-0021	10SLBO-MSO-BLA-CSA-FNA6	1.1E-10	0.0%	99.9%
74	12FWLB-0023	12FWLB-HIC-EFD	1.0E-10	0.0%	99.9%
75	03SLOCA-0006	03SLOCA-CSA-SRA-FNA2	1.0E-10	0.0%	99.9%
76	05SGTR-0019	05SGTR-EFC-SGI	9.0E-11	0.0%	99.9%
77	05SGTR-0021	05SGTR-HIC-SGI	7.7E-11	0.0%	99.9%
78	14LOFF-0010	14LOFF-EFA-FBA-CSA	6.9E-11	0.0%	99.9%
79	19LOOP_A-0014	19LOOP_A-SRV-CSA-CRB3-FNA9	6.8E-11	0.0%	99.9%
80	10SLBO-0031	10SLBO-HIC-MSO-CSA	6.7E-11	0.0%	99.9%
81	19LOOP_D-0009	19LOOP_D-OPS-ADG-EFO-FBA2	5.7E-11	0.0%	99.9%
82	19LOOP_A-0052	19LOOP_A-EFO-FBA2-CSA-FNA9	5.4E-11	0.0%	99.9%
83	19LOOP_A-0051	19LOOP_A-EFO-FBA2-CSA	5.4E-11	0.0%	99.9%
84	10SLBO-0023	10SLBO-HIC-EFB	5.3E-11	0.0%	99.9%
85	22LODC-0008	22LODC-EFA-MFW-FBA1	5.2E-11	0.0%	100.0%
86	19LOOP_A-0007	19LOOP_A-SRV-CXB3-FNA9	5.1E-11	0.0%	100.0%
87	03SLOCA-0048	03SLOCA-EFA-HIB	4.4E-11	0.0%	100.0%
88	16PLOCW-0094	16PLOCW-EFA-HIC-CSA-CRB2	3.8E-11	0.0%	100.0%
89	05SGTR-0017	05SGTR-EFC-CSA-FNA8	3.5E-11	0.0%	100.0%
90	19LOOP_A-0016	19LOOP_A-SRV-HIK-SRA4	3.4E-11	0.0%	100.0%

Table 19.1-24 US-APWR PRA Dominant Core Damage Frequency Sequence (Sheet 6 of 6)

Rank	Sequence ID	Sequence Name	Sequence Frequency (/RY)	Percent Contrib.	Percent Contrib. Total
91	16PLOCW-0081	16PLOCW-EFA-CSA-FNA7	3.1E-11	0.0%	100.0%
92	19LOOP_B-0043	19LOOP_B-OPS-SRV-CWR	3.0E-11	0.0%	100.0%
93	19LOOP_B-0046	19LOOP_B-OPS-EFO-CXB3-FNA9	3.0E-11	0.0%	100.0%
94	12FWLB-0027	12FWLB-HIC-EFD-CSA-FNA6	3.0E-11	0.0%	100.0%
95	10SLBO-0014	10SLBO-MSO-CXA-FNA6	3.0E-11	0.0%	100.0%
96	12FWLB-0006	12FWLB-EFD-CSA-FNA6	3.0E-11	0.0%	100.0%
97	13TRANS-0011	13TRANS-EFA-MFW-FBA1-CSA	3.0E-11	0.0%	100.0%
98	16PLOCW-0066	16PLOCW-SRV-HIC-CSA-CRB2	2.9E-11	0.0%	100.0%
99	14LOFF-0004	14LOFF-EFA-CXA-FNA3	2.7E-11	0.0%	100.0%
100	19LOOP_A-0045	19LOOP_A-EFO-CXB3-FNA9	2.2E-11	0.0%	100.0%

Table 19.1-25 US-APWR PRA Dominant Cutsets (Sheet 1 of 9)

Rank	Cutsets Freq. (/RY)	Percent (%)	Cutsets	Basic Event Name
1	1.8E-07	17.4	!19LOOP	LOSS OF OFFSITE POWER
			EPSCF4DLLRGTG-ALL	CLASS-1E GTG A,B,C,D FAIL TO RUN AFTER FIRST HOUR OF OPERATION (CCF)
			EPSOO02RDG	(HE) FAIL TO CONNECT THE ALTERNATE AC POWER SOURCE TO CLASS 1E BUS
			OPS----PRBF	POWER RECOVERY (1H)
			OPS----PRCF	POWER RECOVERY (3H)
			RCP----SEAL	RCP SEAL LOCA
2	1.4E-07	13.6	!15LOCCW	LOSS OF COMPONENT COOLING WATER
			ACWOO02CT-DP2	(HE) FAIL TO ESTABLISH THE ALTERNATE CCWS BY NON-ESSENTIAL CHILLED WATER SYSTEM COOLING TOWER
			ACWOO02FS	(HE) FAIL TO ESTABLISH THE ALTERNATE CCWS BY FIRE PROTECTION WATER SUPPLY SYSTEM
			RCP----SEAL	RCP SEAL LOCA
3	1.0E-07	9.8	!07RVR	REACTOR VESSEL RUPTURE
4	3.8E-08	3.7	!19LOOP	LOSS OF OFFSITE POWER
			EPSCF4DLADGTG-ALL	CLASS-1E GTG A,B,C,D FAIL TO START (CCF)
			EPSOO02RDG	(HE) FAIL TO CONNECT THE ALTERNATE AC POWER SOURCE TO CLASS 1E BUS
			OPS----PRBF	POWER RECOVERY (1H)
			OPS----PRCF	POWER RECOVERY (3H)
			RCP----SEAL	RCP SEAL LOCA
5	3.5E-08	3.4	!03SLOCA	SMALL PIPE BREAK LOCA
			RWSCF4SUPR001-ALL	SIS-SST-001A,B,C,D (ESS/CS STRAINER) PLUG DURING OPERATION (CCF)

Table 19.1-25 US-APWR PRA Dominant Cutsets (Sheet 2 of 9)

Rank	Cutsets Freq. (/RY)	Percent (%)	Cutsets	Basic Event Name
6	2.8E-08	2.8	!19LOOP	LOSS OF OFFSITE POWER
			EPSCF4DLSRGTG-ALL	CLASS-1E GTG A,B,C,D FAIL TO RUN DURING FIRST HOUR OF OPERATION (CCF)
			EPSOO02RDG	(HE) FAIL TO CONNECT THE ALTERNATE AC POWER SOURCE TO CLASS 1E BUS
			OPS----PRBF	POWER RECOVERY (1H)
			OPS----PRCF	POWER RECOVERY (3H)
			RCP----SEAL	RCP SEAL LOCA
7	2.1E-08	2.1	!20ATWS	ANTICIPATED TRANSIENT
			RTPDASF	DAS FAILURE
			SGNBTHWCCF	DIGITAL I&C HARDWARE CCF
8	1.3E-08	1.2	!19LOOP	LOSS OF OFFSITE POWER
			EPSCF2DLLRAAC-ALL	AAC A,B FAIL TO RUN AFTER FIRST HOUR OF OPERATION (CCF)
			EPSCF4DLLRGTG-ALL	CLASS-1E GTG A,B,C,D FAIL TO RUN AFTER FIRST HOUR OF OPERATION (CCF)
			OPS----PRBF	POWER RECOVERY (1H)
			OPS----PRCF	POWER RECOVERY (3H)
			RCP----SEAL	RCP SEAL LOCA

Table 19.1-25 US-APWR PRA Dominant Cutsets (Sheet 3 of 9)

Rank	Cutsets Freq. (/RY)	Percent (%)	Cutsets	Basic Event Name
9	1.1E-08	1.1	!15LOCCW	LOSS OF COMPONENT COOLING WATER
			EFWCF2PTAD001AD-ALL	EFS-MPP-001A,D (EFW PUMP) FAIL TO START (CCF)
			RCP----SEAL	RCP SEAL LOCA
10	1.1E-08	1.1	!19LOOP	LOSS OF OFFSITE POWER
			ACWOO02CT-DP2	(HE) FAIL TO ESTABLISH THE ALTERNATE CCWS BY NON-ESSENTIAL CHILLED WATER SYSTEM COOLING TOWER
			ACWOO02FS	(HE) FAIL TO ESTABLISH THE ALTERNATE CCWS BY FIRE PROTECTION WATER SUPPLY SYSTEM
			RCP----SEAL	RCP SEAL LOCA
			SWSCF4PMBD001-R-ALL	EWS-MPP-001A,B,C,D (ESW PUMP) FAIL TO RE-START (CCF)
11	6.8E-09	0.66	!19LOOP	LOSS OF OFFSITE POWER
			EPSCF4SEFFGTG-ALL	CLASS-1E GTG A,B,C,D SEQUENCER FAIL TO OPERATE (CCF)
			EPSOO02RDG	(HE) FAIL TO CONNECT THE ALTERNATE AC POWER SOURCE TO CLASS 1E BUS
			OPS----PRBF	POWER RECOVERY (1H)
			OPS----PRCF	POWER RECOVERY (3H)
			RCP----SEAL	RCP SEAL LOCA
12	6.0E-09	0.59	!19LOOP	LOSS OF OFFSITE POWER
			ACWOO02CT-DP2	(HE) FAIL TO ESTABLISH THE ALTERNATE CCWS BY NON-ESSENTIAL CHILLED WATER SYSTEM COOLING TOWER
			ACWOO02FS	(HE) FAIL TO ESTABLISH THE ALTERNATE CCWS BY FIRE PROTECTION WATER SUPPLY SYSTEM
			CWSCF4PCBD001-R-ALL	NCS-MPP-001A,B,C,D (CCW PUMP) FAIL TO RE-START (CCF)
			RCP----SEAL	RCP SEAL LOCA

Table 19.1-25 US-APWR PRA Dominant Cutsets (Sheet 4 of 9)

Rank	Cutsets Freq. (/RY)	Percent (%)	Cutsets	Basic Event Name
13	6.0E-09	0.58	!03SLOCA	SMALL PIPE BREAK LOCA
			NCCOO02CCW	(HE) FAIL TO OPERATE ALTERNATE C/V COOLING BY C/V FAN
			RSSCF4MVOD145-ALL	NCS-MOV-145A,B,C,D FAIL TO OPEN (CCF)
14	5.7E-09	0.56	!10SLBO	STEAM LINE BREAK DOWNSTREAM MSIV
			SGNBTSWCCF2	GROUP-2 APPLICATION SOFTWARE CCF
			SGNOO01S	(HE) FAIL TO START SAFETY INJECTION PUMP BY DAS
15	5.7E-09	0.56	!10SLBO	STEAM LINE BREAK DOWNSTREAM MSIV
			HPIOO01SDVDAS	(HE) FAIL TO OPEN SAFETY DEPRESSURIZATION VALVE BY DAS
			SGNBTSWCCF2	GROUP-2 APPLICATION SOFTWARE CCF
16	5.0E-09	0.49	!20ATWS	ANTICIPATED TRANSIENT
			RTPCRDF	ROD INJECTION FAILURE (4< RODS)
			RTPMTCF	UNFAVORABLE MODERATOR TEMPERATURE
17	5.0E-09	0.49	!15LOCCW	LOSS OF COMPONENT COOLING WATER
			CHICF2PMBD001-ALL	CVS-MPP-001A,B (CHI PUMP) FAIL TO START (CCF)
			RCP----SEAL	RCP SEAL LOCA
18	4.9E-09	0.48	!02MLOCA	MEDIUM PIPE BREAK LOCA
			RWSCF4SUPR001-ALL	SIS-SST-001A,B,C,D (ESS/CS STRAINER) PLUG DURING OPERATION (CCF)
19	4.5E-09	0.44	!10SLBO	STEAM LINE BREAK DOWNSTREAM MSIV
			HPIOO02FWBD-S	(HE) FAIL TO OPEN SAFETY DEPRESSURIZATION VALVE
			MSRCF4AVCD515-ALL	MSS-SMV-515A,B,C,D FAIL TO CLOSE (CCF)

Table 19.1-25 US-APWR PRA Dominant Cutsets (Sheet 5 of 9)

Rank	Cutsets Freq. (/RY)	Percent (%)	Cutsets	Basic Event Name
20	3.9E-09	0.39	!19LOOP	LOSS OF OFFSITE POWER
			EPSOO02RDG	(HE) FAIL TO CONNECT THE ALTERNATE AC POWER SOURCE TO CLASS 1E BUS
			OPS----PRBS	POWER RECOVERY SUCCESS (1H)
			RCP----SEAL	RCP SEAL LOCA
			SGNBTSWCCF2	GROUP-2 APPLICATION SOFTWARE CCF
21	3.6E-09	0.36	!19LOOP	LOSS OF OFFSITE POWER
			EPSCF4CBFC52EPS-ALL	EPS 52/EPSA,B,C,D (BREAKER) FAIL TO CLOSE (CCF)
			EPSOO02RDG	(HE) FAIL TO CONNECT THE ALTERNATE AC POWER SOURCE TO CLASS 1E BUS
			OPS----PRBF	POWER RECOVERY (1H)
			OPS----PRCF	POWER RECOVERY (3H)
			RCP----SEAL	RCP SEAL LOCA
22	3.0E-09	0.29	!03SLOCA	SMALL PIPE BREAK LOCA
			HPICF4PMAD001-ALL	SIS-MPP-001A,B,C,D (SI PUMP) FAIL TO START (CCF)
			RSSOO02LNUP	(HE) FAIL TO OPERATE ALTERNATE CORE COOLING
23	2.8E-09	0.27	!19LOOP	LOSS OF OFFSITE POWER
			EPSCBFO52UAT-ALL	EPS 52/UATA,B,C,D (BREAKER) FAIL TO OPEN (CCF)
			EPSOO01UATRAT	(HE) FAIL TO SEPARATE 52/UATA,D,52/RATA,D (BREAKER) AT LOCAL
			OPS----PRBF	POWER RECOVERY (1H)
			OPS----PRCF	POWER RECOVERY (3H)
			RCP----SEAL	RCP SEAL LOCA

Table 19.1-25 US-APWR PRA Dominant Cutsets (Sheet 6 of 9)

Rank	Cutsets Freq. (/RY)	Percent (%)	Cutsets	Basic Event Name
24	2.8E-09	0.27	!19LOOP	LOSS OF OFFSITE POWER
			EPSCBFO52RAT-ALL	EPS 52/RATA,B,C,D (BREAKER) FAIL TO OPEN (CCF)
			EPSOO01UATRAT	(HE) FAIL TO SEPARATE 52/UATA,D,52/RATA,D (BREAKER) AT LOCAL
			OPS----PRBF	POWER RECOVERY (1H)
			OPS----PRCF	POWER RECOVERY (3H)
			RCP----SEAL	RCP SEAL LOCA
25	2.7E-09	0.27	!15LOCCW	LOSS OF COMPONENT COOLING WATER
			EFWCF2PTSR001AD-ALL	EFS-MPP-001A,D (EFW PUMP) FAIL TO RUN DURING FIRST HOUR OF OPERATION (CCF)
			RCP----SEAL	RCP SEAL LOCA
26	2.7E-09	0.26	!15LOCCW	LOSS OF COMPONENT COOLING WATER
			EFWOO01006AB	(HE) FAIL TO CHANGEOVER EFW PIT
			EFWPTAD001D	EFS-MPP-001D (D-EFW PUMP) FAIL TO START
			RCP----SEAL	RCP SEAL LOCA
27	2.7E-09	0.26	!15LOCCW	LOSS OF COMPONENT COOLING WATER
			EFWOO01006AB	(HE) FAIL TO CHANGEOVER EFW PIT
			EFWPTAD001A	EFS-MPP-001A (A-EFW PUMP) FAIL TO START
			RCP----SEAL	RCP SEAL LOCA
28	2.7E-09	0.26	!19LOOP	LOSS OF OFFSITE POWER
			EPSCF2DLLRAAC-ALL	AAC A,B FAIL TO RUN AFTER FIRST HOUR OF OPERATION (CCF)
			EPSCF4DLADGTG-ALL	CLASS-1E GTG A,B,C,D FAIL TO START (CCF)
			OPS----PRBF	POWER RECOVERY (1H)
			OPS----PRCF	POWER RECOVERY (3H)
			RCP----SEAL	RCP SEAL LOCA

Table 19.1-25 US-APWR PRA Dominant Cutsets (Sheet 7 of 9)

Rank	Cutsets Freq. (/RY)	Percent (%)	Cutsets	Basic Event Name
29	2.6E-09	0.26	!19LOOP	LOSS OF OFFSITE POWER
			EPSOO02RDG	(HE) FAIL TO CONNECT THE ALTERNATE AC POWER SOURCE TO CLASS 1E BUS
			OPS----PRBF	POWER RECOVERY (1H)
			OPS----PRCS	POWER RECOVERY SUCCESS (3H)
			RCP----SEAL	RCP SEAL LOCA
			SGNBTSWCCF2	GROUP-2 APPLICATION SOFTWARE CCF
30	2.6E-09	0.26	!19LOOP	LOSS OF OFFSITE POWER
			EPSCF4DLLRGTG-ALL	CLASS-1E GTG A,B,C,D FAIL TO RUN AFTER FIRST HOUR OF OPERATION (CCF)
			EPSDLLRAACA-L2	A-AAC FAIL TO LOAD AND RUN AFTER FIRST HOUR OF OPERATION
			EPSDLLRAACB-L2	B-AAC FAIL TO LOAD AND RUN AFTER FIRST HOUR OF OPERATION
			OPS----PRBF	POWER RECOVERY (1H)
			OPS----PRCF	POWER RECOVERY (3H)
			RCP----SEAL	RCP SEAL LOCA
31	2.6E-09	0.25	!19LOOP	LOSS OF OFFSITE POWER
			EPSCF2DLADAAC-ALL	AAC A,B FAIL TO START (CCF)
			EPSCF4DLLRGTG-ALL	CLASS-1E GTG A,B,C,D FAIL TO RUN AFTER FIRST HOUR OF OPERATION (CCF)
			OPS----PRBF	POWER RECOVERY (1H)
			OPS----PRCF	POWER RECOVERY (3H)
			RCP----SEAL	RCP SEAL LOCA

Table 19.1-25 US-APWR PRA Dominant Cutsets (Sheet 8 of 9)

Rank	Cutsets Freq. (/RY)	Percent (%)	Cutsets	Basic Event Name
32	2.5E-09	0.24	!19LOOP	LOSS OF OFFSITE POWER
			EPSCF4DLLRGTG-234	CLASS-1E GTG A,C,D FAIL TO RUN AFTER FIRST HOUR OF OPERATION (CCF)
			EPSOO02RDG	(HE) FAIL TO CONNECT THE ALTERNATE AC POWER SOURCE TO CLASS 1E BUS
			RCP----SEAL	RCP SEAL LOCA
			SWSTMPE001B	EWS-MPP-001B (B-ESW PUMP) TEST & MAINTENANCE
33	2.5E-09	0.24	!19LOOP	LOSS OF OFFSITE POWER
			EPSCBFO52UAT-ACD	EPS 52/UATA,C,D (BREAKER) FAIL TO OPEN (CCF)
			RCP----SEAL	RCP SEAL LOCA
			SWSTMPE001B	EWS-MPP-001B (B-ESW PUMP) TEST & MAINTENANCE
34	2.5E-09	0.24	!19LOOP	LOSS OF OFFSITE POWER
			EPSCBFO52RAT-ACD	EPS 52/RATA,C,D (BREAKER) FAIL TO OPEN (CCF)
			RCP----SEAL	RCP SEAL LOCA
			SWSTMPE001B	EWS-MPP-001B (B-ESW PUMP) TEST & MAINTENANCE
35	2.4E-09	0.24	!15LOCCW	LOSS OF COMPONENT COOLING WATER
			RCP----SEAL	RCP SEAL LOCA
			SGNBTSWCCF3	NON-SAFETY (PCMS) APPLICATION SOFTWARE CCF
36	2.2E-09	0.22	!15LOCCW	LOSS OF COMPONENT COOLING WATER
			ACWOO02FS	(HE) FAIL TO ESTABLISH THE ALTERNATE CCWS BY FIRE PROTECTION WATER SUPPLY SYSTEM
			ACWTMPZ351A	VWS-MPP-351A (A-CONDENSER WATER PUMP) TEST & MAINTENANCE
			RCP----SEAL	RCP SEAL LOCA

Table 19.1-25 US-APWR PRA Dominant Cutsets (Sheet 9 of 9)

Rank	Cutsets Freq. (/RY)	Percent (%)	Cutsets	Basic Event Name
37	2.1E-09	0.20	!03SLOCA	SMALL PIPE BREAK LOCA
			SGNBTSWCCF2	GROUP-2 APPLICATION SOFTWARE CCF
			SGNOO01S	(HE) FAIL TO START SAFETY INJECTION PUMP BY DAS
38	2.1E-09	0.20	!15LOCCW	LOSS OF COMPONENT COOLING WATER
			EFWOO01006AB	(HE) FAIL TO CHANGEOVER EFW PIT
			EFWTMTA001A	EFS-MPP-001A (A-EFW PUMP) TEST & MAINTENANCE
			RCP----SEAL	RCP SEAL LOCA
39	2.1E-09	0.20	!15LOCCW	LOSS OF COMPONENT COOLING WATER
			EFWOO01006AB	(HE) FAIL TO CHANGEOVER EFW PIT
			EFWTMTA001D	EFS-MPP-001D (D-EFW PUMP) TEST & MAINTENANCE
			RCP----SEAL	RCP SEAL LOCA
40	2.0E-09	0.19	!19LOOP	LOSS OF OFFSITE POWER
			EPSCF2DLSRAAC-ALL	AAC A,B FAIL TO RUN DURING FIRST HOUR OF OPERATION (CCF)
			EPSCF4DLLRGTG-ALL	CLASS-1E GTG A,B,C,D FAIL TO RUN AFTER FIRST HOUR OF OPERATION (CCF)
			OPS----PRBF	POWER RECOVERY (1H)
			OPS----PRCF	POWER RECOVERY (3H)
			RCP----SEAL	RCP SEAL LOCA

Table 19.1-26 US-APWR PRA Dominant Cutsets for Each Initiating Event (Sheet 1 of 39)
Large Pipe Break LOCA (Sheet 1 of 2)

Rank	Cutsets Freq. (/RY)	Percent (%)	Cutsets	Basic Event Name
1	1.3E-10	40.9	!01LLOCA	LARGE PIPE BREAK LOCA
			HPICF4PMAD001-ALL	SIS-MPP-001A,B,C,D (SI PUMP) FAIL TO START (CCF)
			RSS-RHR-LL	ALTERNATE CORE COOLING FAILURE
2	1.2E-11	3.6	!01LLOCA	LARGE PIPE BREAK LOCA
			RSS-RHR-LL	ALTERNATE CORE COOLING FAILURE
			RWSCF4SUPR001-ALL	SIS-SST-001A,B,C,D (ESS/CS STRAINER) PLUG DURING OPERATION (CCF)
3	1.1E-11	3.5	!01LLOCA	LARGE PIPE BREAK LOCA
			HPICF4PMAD001-234	SIS-MPP-001A,C,D (SI PUMP) FAIL TO START (CCF)
			RSS-RHR-LL	ALTERNATE CORE COOLING FAILURE
4	1.1E-11	3.5	!01LLOCA	LARGE PIPE BREAK LOCA
			HPICF4PMAD001-123	SIS-MPP-001B,C,D (SI PUMP) FAIL TO START (CCF)
			RSS-RHR-LL	ALTERNATE CORE COOLING FAILURE
5	1.1E-11	3.5	!01LLOCA	LARGE PIPE BREAK LOCA
			HPICF4PMAD001-124	SIS-MPP-001A,B,C(SI PUMP) FAIL TO START (CCF)
			RSS-RHR-LL	ALTERNATE CORE COOLING FAILURE
6	1.1E-11	3.5	!01LLOCA	LARGE PIPE BREAK LOCA
			HPICF4PMAD001-134	SIS-MPP-001A,B,D (SI PUMP) FAIL TO START (CCF)
			RSS-RHR-LL	ALTERNATE CORE COOLING FAILURE

Table 19.1-26 US-APWR PRA Dominant Cutsets for Each Initiating Event (Sheet 2 of 39)
Large Pipe Break LOCA (Sheet 2 of 2)

Rank	Cutsets Freq. (/RY)	Percent (%)	Cutsets	Basic Event Name
7	1.0E-11	3.1	!01LLOCA	LARGE PIPE BREAK LOCA
			HPICF4PMSR001-ALL	SIS-MPP-001A,B,C,D (SI PUMP) FAIL TO RUN DURING FIRST HOUR OF OPERATION (CCF)
			RSS-RHR-LL	ALTERNATE CORE COOLING FAILURE
8	6.3E-12	1.9	!01LLOCA	LARGE PIPE BREAK LOCA
			EPSCF4DLLRGTG-ALL	CLASS-1E GTG A,B,C,D FAIL TO RUN AFTER FIRST HOUR OF OPERATION (CCF)
			OPSLOOP	CONSEQUENTIAL LOOP GIVEN A REACTOR TRIP
			RSS-RHR-LL	ALTERNATE CORE COOLING FAILURE
9	4.4E-12	1.4	!01LLOCA	LARGE PIPE BREAK LOCA
			RSS-RHR-LL	ALTERNATE CORE COOLING FAILURE
			RWSCF4SUPR001-123	SIS-SST-001B,C,D (ESS/CS STRAINER) PLUG DURING OPERATION (CCF)
10	4.4E-12	1.4	!01LLOCA	LARGE PIPE BREAK LOCA
			RSS-RHR-LL	ALTERNATE CORE COOLING FAILURE
			RWSCF4SUPR001-134	SIS-SST-001A,B,D (ESS/CS STRAINER) PLUG DURING OPERATION (CCF)

Table 19.1-26 US-APWR PRA Dominant Cutsets for Each Initiating Event (Sheet 3 of 39)
Medium Pipe Break LOCA (Sheet 1 of 2)

Rank	Cutsets Freq. (/RY)	Percent (%)	Cutsets	Basic Event Name
1	4.9E-09	30.7	!02MLOCA RWSCF4SUPR001-ALL	MEDIUM PIPE BREAK LOCA SIS-SST-001A,B,C,D (ESS/CS STRAINER) PLUG DURING OPERATION (CCF)
2	1.8E-09	11.6	!02MLOCA RWSCF4SUPR001-123	MEDIUM PIPE BREAK LOCA SIS-SST-001B,C,D (ESS/CS STRAINER) PLUG DURING OPERATION (CCF)
3	8.3E-10	5.2	!02MLOCA NCCOO02CCW RSSCF4MVOD145-ALL	MEDIUM PIPE BREAK LOCA (HE) FAIL TO OPERATE ALTERNATE C/V COOLING BY C/V FAN NCS-MOV-145A,B,C,D FAIL TO OPEN (CCF)
4	5.0E-10	3.2	!02MLOCA ACCCF4CVOD102-ALL	MEDIUM PIPE BREAK LOCA SIS-VLV-102A,B,C,D FAIL TO OPEN (CCF)
5	5.0E-10	3.2	!02MLOCA ACCCF4CVOD103-ALL	MEDIUM PIPE BREAK LOCA SIS-VLV-103A,B,C,D FAIL TO OPEN (CCF)
6	4.1E-10	2.6	!02MLOCA HPICF4PMAD001-ALL RSSOO02LNUP	MEDIUM PIPE BREAK LOCA SIS-MPP-001A,B,C,D (SI PUMP) FAIL TO START (CCF) (HE) FAIL TO OPERATE ALTERNATE CORE COOLING
7	2.9E-10	1.8	!02MLOCA SGNBTSWCCF2 SGNOO01S	MEDIUM PIPE BREAK LOCA GROUP-2 APPLICATION SOFTWARE CCF (HE) FAIL TO START SAFETY INJECTION PUMP BY DAS
8	1.9E-10	1.2	!02MLOCA NCCOO02CCW RSSCF4PMAD001-ALL	MEDIUM PIPE BREAK LOCA (HE) FAIL TO OPERATE ALTERNATE C/V COOLING BY C/V FAN RHS-MPP-001A,B,C,D (CS/RHR PUMP) FAIL TO START (CCF)

Table 19.1-26 US-APWR PRA Dominant Cutsets for Each Initiating Event (Sheet 4 of 39)
Medium Pipe Break LOCA (Sheet 2 of 2)

Rank	Cutsets Freq. (/RY)	Percent (%)	Cutsets	Basic Event Name
9	1.4E-10	0.90	!02MLOCA	MEDIUM PIPE BREAK LOCA
			HPICF4PMAD001-ALL	SIS-MPP-001A,B,C,D (SI PUMP) FAIL TO START (CCF)
			MSPOO02STRV	(HE) FAIL TO DEPRESSURIZE RCS BY SECONDARY SIDE COOLING
10	1.3E-10	0.84	!02MLOCA	MEDIUM PIPE BREAK LOCA
			ACCCF4CVOD103-234	SIS-VLV-103B,C,D FAIL TO OPEN (CCF)

Table 19.1-26 US-APWR PRA Dominant Cutsets for Each Initiating Event (Sheet 5 of 39)
Small Pipe Break LOCA (Sheet 1 of 2)

Rank	Cutsets Freq. (/RY)	Percent (%)	Cutsets	Basic Event Name
1	3.5E-08	45.9	!03SLOCA	SMALL PIPE BREAK LOCA
			RWSCF4SUPR001-ALL	SIS-SST-001A,B,C,D (ESS/CS STRAINER) PLUG DURING OPERATION (CCF)
2	6.0E-09	7.8	!03SLOCA	SMALL PIPE BREAK LOCA
			NCCOO02CCW	(HE) FAIL TO OPERATE ALTERNATE C/V COOLING BY C/V FAN
			RSSCF4MVOD145-ALL	NCS-MOV-145A,B,C,D FAIL TO OPEN (CCF)
3	3.0E-09	3.9	!03SLOCA	SMALL PIPE BREAK LOCA
			HPICF4PMAD001-ALL	SIS-MPP-001A,B,C,D (SI PUMP) FAIL TO START (CCF)
			RSSOO02LNUP	(HE) FAIL TO OPERATE ALTERNATE CORE COOLING
4	2.1E-09	2.7	!03SLOCA	SMALL PIPE BREAK LOCA
			SGNBTSWCCF2	GROUP-2 APPLICATION SOFTWARE CCF
			SGNOO01S	(HE) FAIL TO START SAFETY INJECTION PUMP BY DAS
5	1.3E-09	1.8	!03SLOCA	SMALL PIPE BREAK LOCA
			NCCOO02CCW	(HE) FAIL TO OPERATE ALTERNATE C/V COOLING BY C/V FAN
			RSSCF4PMAD001-ALL	RHS-MPP-001A,B,C,D (CS/RHR PUMP) FAIL TO START (CCF)
6	1.0E-09	1.4	!03SLOCA	SMALL PIPE BREAK LOCA
			HPICF4PMAD001-ALL	SIS-MPP-001A,B,C,D (SI PUMP) FAIL TO START (CCF)
			MSPOO02STRV	(HE) FAIL TO DEPRESSURIZE RCS BY SECONDARY SIDE COOLING

Table 19.1-26 US-APWR PRA Dominant Cutsets for Each Initiating Event (Sheet 6 of 39)
Small Pipe Break LOCA (Sheet 2 of 2)

Rank	Cutsets Freq. (/RY)	Percent (%)	Cutsets	Basic Event Name
7	5.7E-10	0.74	!03SLOCA	SMALL PIPE BREAK LOCA
			EPSCF4CBSO52STH-ALL	EPS 52/STHA,B,C,D (BREAKER) SPURIOUS OPEN (CCF)
8	5.7E-10	0.74	!03SLOCA	SMALL PIPE BREAK LOCA
			EPSCF4CBSO52LC-ALL	EPS 52/LCA,B,C,D (BREAKER) SPURIOUS OPEN (CCF)
9	5.7E-10	0.74	!03SLOCA	SMALL PIPE BREAK LOCA
			EPSCF4CBSO52STL-ALL	EPS 52/STLA,B,C,D (BREAKER) SPURIOUS OPEN (CCF)
10	4.4E-10	0.58	!03SLOCA	SMALL PIPE BREAK LOCA
			SGNBTHWCCF	DIGITAL I&C HARDWARE CCF
			SGNOO01S	(HE) FAIL TO START SAFETY INJECTION PUMP BY DAS

Table 19.1-26 US-APWR PRA Dominant Cutsets for Each Initiating Event (Sheet 7 of 39)
Very Small Pipe Break LOCA (Sheet 1 of 2)

Rank	Cutsets Freq. (/RY)	Percent (%)	Cutsets	Basic Event Name
1	2.4E-10	22.2	!04VSLOCA	VERY SMALL PIPE BREAK LOCA
			EPSCF4CBSO52STH-ALL	EPS 52/STHA,B,C,D (BREAKER) SPURIOUS OPEN (CCF)
2	2.4E-10	22.2	!04VSLOCA	VERY SMALL PIPE BREAK LOCA
			EPSCF4CBSO52STL-ALL	EPS 52/STLA,B,C,D (BREAKER) SPURIOUS OPEN (CCF)
3	1.7E-10	15.5	!04VSLOCA	VERY SMALL PIPE BREAK LOCA
			EPSCF4DLLRGTG-ALL	CLASS-1E GTG A,B,C,D FAIL TO RUN AFTER FIRST HOUR OF OPERATION (CCF)
			EPSOO02RDG	(HE) FAIL TO CONNECT THE ALTERNATE AC POWER SOURCE TO CLASS 1E BUS
			OPSLOOP	CONSEQUENTIAL LOOP GIVEN A REACTOR TRIP
4	5.4E-11	5.1	!04VSLOCA	VERY SMALL PIPE BREAK LOCA
			CWSCF4RHPR-FF	NCS-MHX-001A,B,C,D (A,B,C,D-CCW HX) PLUG / FOUL (CCF)
5	3.5E-11	3.3	!04VSLOCA	VERY SMALL PIPE BREAK LOCA
			EPSCF4DLADGTG-ALL	CLASS-1E GTG A,B,C,D FAIL TO START (CCF)
			EPSOO02RDG	(HE) FAIL TO CONNECT THE ALTERNATE AC POWER SOURCE TO CLASS 1E BUS
			OPSLOOP	CONSEQUENTIAL LOOP GIVEN A REACTOR TRIP
6	2.6E-11	2.4	!04VSLOCA	VERY SMALL PIPE BREAK LOCA
			EPSCF4DLSRGTG-ALL	CLASS-1E GTG A,B,C,D FAIL TO RUN DURING FIRST HOUR OF OPERATION (CCF)
			EPSOO02RDG	(HE) FAIL TO CONNECT THE ALTERNATE AC POWER SOURCE TO CLASS 1E BUS
			OPSLOOP	CONSEQUENTIAL LOOP GIVEN A REACTOR TRIP

Table 19.1-26 US-APWR PRA Dominant Cutsets for Each Initiating Event (Sheet 8 of 39)
Very Small Pipe Break LOCA (Sheet 2 of 2)

Rank	Cutsets Freq. (/RY)	Percent (%)	Cutsets	Basic Event Name
7	1.8E-11	1.7	!04VSLOCA	VERY SMALL PIPE BREAK LOCA
			SWSCF4PMYR-FF	EWS-MPP-001A,B,C,D (A,B,C,D-ESW PUMP) FAIL TO RUN (CCF)
8	1.2E-11	1.1	!04VSLOCA	VERY SMALL PIPE BREAK LOCA
			EPSCF2DLLRAAC-ALL	AAC A,B FAIL TO RUN AFTER FIRST HOUR OF OPERATION (CCF)
			EPSCF4DLLRGTG-ALL	CLASS-1E GTG A,B,C,D FAIL TO RUN AFTER FIRST HOUR OF OPERATION (CCF)
			OPSLOOP	CONSEQUENTIAL LOOP GIVEN A REACTOR TRIP
9	1.0E-11	0.95	!04VSLOCA	VERY SMALL PIPE BREAK LOCA
			CWSCF4PCYR-FF	NCS-MPP-001A,B,C,D (A,B,C,D-CCW PUMP) FAIL TO RUN (CCF)
10	9.1E-12	0.85	!04VSLOCA	VERY SMALL PIPE BREAK LOCA
			EFWCF2CVOD008-ALL	EFS-VLV-008A,B FAIL TO OPEN (CCF)
			HPIOO02FWBD-S	(HE) FAIL TO OPEN SAFETY DEPRESSURIZATION VALVE

Table 19.1-26 US-APWR PRA Dominant Cutsets for Each Initiating Event (Sheet 9 of 39)
Steam Generator Tube Rupture (Sheet 1 of 3)

Rank	Cutsets Freq. (/RY)	Percent (%)	Cutsets	Basic Event Name
1	1.3E-09	12.1	!05SGTR	STEAM GENERATOR TUBE RUPTURE
			HITOO02	(HE) FAIL TO CONTROL HIGH HEAD INJECTION FLOW
			MSPMLWTH	WATER HUMMER IN STEAM LINE
			SGNST-EFWPA	A-SG WATER LEVEL HIGH/LOW SIGNAL FAILURE
2	3.0E-10	2.8	!05SGTR	STEAM GENERATOR TUBE RUPTURE
			MSPMLWTH	WATER HUMMER IN STEAM LINE
			PZROO02PORV	(HE) FAIL TO OPERATE RCS FORCED DEPRESSURIZATION
			SGNST-EFWPA	A-SG WATER LEVEL HIGH/LOW SIGNAL FAILURE
3	1.2E-10	1.2	!05SGTR	STEAM GENERATOR TUBE RUPTURE
			MSPMLWTH	WATER HUMMER IN STEAM LINE
			MSPOO02STRV-SG	(HE) FAIL TO DEPRESSURIZE RCS BY SECONDARY SIDE COOLING
			SGNST-EFWPA	A-SG WATER LEVEL HIGH/LOW SIGNAL FAILURE
4	1.2E-10	1.1	!05SGTR	STEAM GENERATOR TUBE RUPTURE
			HITOO02-DP3	(HE) FAIL TO CONTROL HIGH HEAD INJECTION FLOW
			MSPOO0250A1-DP2	(HE) FAIL TO CLOSE MSS-50A1 (MANUAL VALVE)
			MSRAVCD550A	MSS-TCV-550A FAIL TO CLOSE
			MSROO02515A	(HE) FAIL TO CLOSE MSS-SMV-515A
5	1.2E-10	1.1	!05SGTR	STEAM GENERATOR TUBE RUPTURE
			HITOO02-DP3	(HE) FAIL TO CONTROL HIGH HEAD INJECTION FLOW
			MSPOO0250C2-DP2	(HE) FAIL TO CLOSE MSS-50C2 (MANUAL VALVE)
			MSRAVCD550F	MSS-TCV-550F FAIL TO CLOSE
			MSROO02515A	(HE) FAIL TO CLOSE MSS-SMV-515A

Table 19.1-26 US-APWR PRA Dominant Cutsets for Each Initiating Event (Sheet 10 of 39)
Steam Generator Tube Rupture (Sheet 2 of 3)

Rank	Cutsets Freq. (/RY)	Percent (%)	Cutsets	Basic Event Name
6	1.2E-10	1.1	!05SGTR	STEAM GENERATOR TUBE RUPTURE
			HITOO02-DP3	(HE) FAIL TO CONTROL HIGH HEAD INJECTION FLOW
			MSPOO0250A2-DP2	(HE) FAIL TO CLOSE MSS-50A2 (MANUAL VALVE)
			MSRAVCD550K	MSS-TCV-550K FAIL TO CLOSE
			MSROO02515A	(HE) FAIL TO CLOSE MSS-SMV-515A
7	1.2E-10	1.1	!05SGTR	STEAM GENERATOR TUBE RUPTURE
			HITOO02-DP3	(HE) FAIL TO CONTROL HIGH HEAD INJECTION FLOW
			MSPOO0250A1-DP2	(HE) FAIL TO CLOSE MSS-50A1 (MANUAL VALVE)
			MSRAVCD550N	MSS-TCV-550N FAIL TO CLOSE
			MSROO02515A	(HE) FAIL TO CLOSE MSS-SMV-515A
8	1.2E-10	1.1	!05SGTR	STEAM GENERATOR TUBE RUPTURE
			HITOO02-DP3	(HE) FAIL TO CONTROL HIGH HEAD INJECTION FLOW
			MSPOO0250B2-DP2	(HE) FAIL TO CLOSE MSS-50B2 (MANUAL VALVE)
			MSRAVCD550E	MSS-TCV-550E FAIL TO CLOSE
			MSROO02515A	(HE) FAIL TO CLOSE MSS-SMV-515A
9	1.2E-10	1.1	!05SGTR	STEAM GENERATOR TUBE RUPTURE
			HITOO02-DP3	(HE) FAIL TO CONTROL HIGH HEAD INJECTION FLOW
			MSPOO0250C1-DP2	(HE) FAIL TO CLOSE MSS-50C1 (MANUAL VALVE)
			MSRAVCD550Q	MSS-TCV-550Q FAIL TO CLOSE
			MSROO02515A	(HE) FAIL TO CLOSE MSS-SMV-515A

Table 19.1-26 US-APWR PRA Dominant Cutsets for Each Initiating Event (Sheet 11 of 39)
Steam Generator Tube Rupture (Sheet 3 of 3)

Rank	Cutsets Freq. (/RY)	Percent (%)	Cutsets	Basic Event Name
10	1.2E-10	1.1	!05SGTR	STEAM GENERATOR TUBE RUPTURE
			HITOO02-DP3	(HE) FAIL TO CONTROL HIGH HEAD INJECTION FLOW
			MSPOO0250C1-DP2	(HE) FAIL TO CLOSE MSS-50C1 (MANUAL VALVE)
			MSRAVCD550C	MSS-TCV-550C FAIL TO CLOSE
			MSROO02515A	(HE) FAIL TO CLOSE MSS-SMV-515A

Table 19.1-26 US-APWR PRA Dominant Cutsets for Each Initiating Event (Sheet 12 of 39)
Reactor Vessel Rupture

Rank	Cutsets Freq. (/RY)	Percent (%)	Cutsets	Basic Event Name
1	1.0E-07	100	!07RVR	REACTOR VESSEL RUPTURE

Table 19.1-26 US-APWR PRA Dominant Cutsets for Each Initiating Event (Sheet 13 of 39)
Steam Line Break/Leak (Turbine Side) (Sheet 1 of 2)

Rank	Cutsets Freq. (/RY)	Percent (%)	Cutsets	Basic Event Name
1	5.7E-09	16.1	!10SLBO	STEAM LINE BREAK DOWNSTREAM MSIV
			SGNBTSWCCF2	GROUP-2 APPLICATION SOFTWARE CCF
			SGNOO01S	(HE) FAIL TO START SAFETY INJECTION PUMP BY DAS
2	5.7E-09	16.1	!10SLBO	STEAM LINE BREAK DOWNSTREAM MSIV
			HPIOO01SDVDAS	(HE) FAIL TO OPEN SAFETY DEPRESSURIZATION VALVE BY DAS
			SGNBTSWCCF2	GROUP-2 APPLICATION SOFTWARE CCF
3	4.5E-09	12.7	!10SLBO	STEAM LINE BREAK DOWNSTREAM MSIV
			HPIOO02FWBD-S	(HE) FAIL TO OPEN SAFETY DEPRESSURIZATION VALVE
			MSRCF4AVCD515-ALL	MSS-SMV-515A,B,C,D FAIL TO CLOSE (CCF)
4	1.3E-09	3.8	!10SLBO	STEAM LINE BREAK DOWNSTREAM MSIV
			HPIOO02FWBD-S	(HE) FAIL TO OPEN SAFETY DEPRESSURIZATION VALVE
			MSRCF4AVCD515-24	MSS-SMV-515B,D FAIL TO CLOSE (CCF)
5	1.3E-09	3.8	!10SLBO	STEAM LINE BREAK DOWNSTREAM MSIV
			HPIOO02FWBD-S	(HE) FAIL TO OPEN SAFETY DEPRESSURIZATION VALVE
			MSRCF4AVCD515-14	MSS-SMV-515C,D FAIL TO CLOSE (CCF)
6	1.3E-09	3.8	!10SLBO	STEAM LINE BREAK DOWNSTREAM MSIV
			HPIOO02FWBD-S	(HE) FAIL TO OPEN SAFETY DEPRESSURIZATION VALVE
			MSRCF4AVCD515-12	MSS-SMV-515B,C FAIL TO CLOSE (CCF)

Table 19.1-26 US-APWR PRA Dominant Cutsets for Each Initiating Event (Sheet 14 of 39)
Steam Line Break/Leak (Turbine Side) (Sheet 2 of 2)

Rank	Cutsets Freq. (/RY)	Percent (%)	Cutsets	Basic Event Name
7	1.3E-09	3.8	!10SLBO	STEAM LINE BREAK DOWNSTREAM MSIV
			HPIOO02FWBD-S	(HE) FAIL TO OPEN SAFETY DEPRESSURIZATION VALVE
			MSRCF4AVCD515-23	MSS-SMV-515B,C FAIL TO CLOSE (CCF)
8	1.3E-09	3.8	!10SLBO	STEAM LINE BREAK DOWNSTREAM MSIV
			HPIOO02FWBD-S	(HE) FAIL TO OPEN SAFETY DEPRESSURIZATION VALVE
			MSRCF4AVCD515-34	MSS-SMV-515A,D FAIL TO CLOSE (CCF)
9	1.3E-09	3.8	!10SLBO	STEAM LINE BREAK DOWNSTREAM MSIV
			HPIOO02FWBD-S	(HE) FAIL TO OPEN SAFETY DEPRESSURIZATION VALVE
			MSRCF4AVCD515-13	MSS-SMV-515A,C FAIL TO CLOSE (CCF)
10	1.2E-09	3.4	!10SLBO	STEAM LINE BREAK DOWNSTREAM MSIV
			HPIOO01SDVDAS	(HE) FAIL TO OPEN SAFETY DEPRESSURIZATION VALVE BY DAS
			SGNBTHWCCF	DIGITAL I&C HARDWARE CCF

Table 19.1-26 US-APWR PRA Dominant Cutsets for Each Initiating Event (Sheet 15 of 39)
Steam Line Break/Leak (CV Side) (Sheet 1 of 2)

Rank	Cutsets Freq. (/RY)	Percent (%)	Cutsets	Basic Event Name
1	6.1E-12	3.5	!11SLBI	STEAM LINE BREAK UPSTREAM MSIV
			EFWCF2CVOD008-ALL	EFS-VLV-008A,B FAIL TO OPEN (CCF)
			HPIOO02FWBD-S	(HE) FAIL TO OPEN SAFETY DEPRESSURIZATION VALVE
2	4.2E-12	2.4	!11SLBI	STEAM LINE BREAK UPSTREAM MSIV
			EFWCF4CVOD012-ALL	EFS-VLV-012A,B,C,D FAIL TO OPEN (CCF)
			HPIOO02FWBD-S	(HE) FAIL TO OPEN SAFETY DEPRESSURIZATION VALVE
3	4.2E-12	2.4	!11SLBI	STEAM LINE BREAK UPSTREAM MSIV
			EFWCF4CVOD018-ALL	EFS-VLV-018A,B,C,D FAIL TO OPEN (CCF)
			HPIOO02FWBD-S	(HE) FAIL TO OPEN SAFETY DEPRESSURIZATION VALVE
4	3.8E-12	2.2	!11SLBI	STEAM LINE BREAK UPSTREAM MSIV
			EFWPTAD001D	EFS-MPP-001D (D-EFW PUMP) FAIL TO START
			SGNBTSWCCF2	GROUP-2 APPLICATION SOFTWARE CCF
			SGNOO01S	(HE) FAIL TO START SAFETY INJECTION PUMP BY DAS
5	3.8E-12	2.2	!11SLBI	STEAM LINE BREAK UPSTREAM MSIV
			EFWPTAD001D	EFS-MPP-001D (D-EFW PUMP) FAIL TO START
			HPIOO01SDVDAS	(HE) FAIL TO OPEN SAFETY DEPRESSURIZATION VALVE BY DAS
			SGNBTSWCCF2	GROUP-2 APPLICATION SOFTWARE CCF
6	3.5E-12	2.0	!11SLBI	STEAM LINE BREAK UPSTREAM MSIV
			HPIOO02FWBD-S	(HE) FAIL TO OPEN SAFETY DEPRESSURIZATION VALVE
			RTPCF4ICYRRT7001-ALL	SG WATER LEVEL SENSOR (NARROW RANGE) CCF

Table 19.1-26 US-APWR PRA Dominant Cutsets for Each Initiating Event (Sheet 16 of 39)
Steam Line Break/Leak (CV Side) (Sheet 2 of 2)

Rank	Cutsets Freq. (/RY)	Percent (%)	Cutsets	Basic Event Name
7	3.4E-12	2.0	!11SLBI	STEAM LINE BREAK UPSTREAM MSIV
			EFWOO01006AB	(HE) FAIL TO CHANGEOVER EFW PIT
			EFWPTAD001A	EFS-MPP-001A (A-EFW PUMP) FAIL TO START
			HPIOO02FWBD-S	(HE) FAIL TO OPEN SAFETY DEPRESSURIZATION VALVE
			SWSTMPE001B	EWS-MPP-001B (B-ESW PUMP) TEST & MAINTENANCE
8	3.0E-12	1.8	!11SLBI	STEAM LINE BREAK UPSTREAM MSIV
			HPIOO01SDVDAS	(HE) FAIL TO OPEN SAFETY DEPRESSURIZATION VALVE BY DAS
			OPSLOOP	CONSEQUENTIAL LOOP GIVEN A REACTOR TRIP
			SGNBTSWCCF2	GROUP-2 APPLICATION SOFTWARE CCF
9	3.0E-12	1.8	!11SLBI	STEAM LINE BREAK UPSTREAM MSIV
			OPSLOOP	CONSEQUENTIAL LOOP GIVEN A REACTOR TRIP
			SGNBTSWCCF2	GROUP-2 APPLICATION SOFTWARE CCF
			SGNOO01S	(HE) FAIL TO START SAFETY INJECTION PUMP BY DAS
10	2.8E-12	1.6	!11SLBI	STEAM LINE BREAK UPSTREAM MSIV
			EFWOO01006AB	(HE) FAIL TO CHANGEOVER EFW PIT
			EFWPTAD001A	EFS-MPP-001A (A-EFW PUMP) FAIL TO START
			HPIOO02FWBD-S	(HE) FAIL TO OPEN SAFETY DEPRESSURIZATION VALVE
			VCWCHBD001B	VWS-MEQ-001B (B-ESSENTIAL CHILLER UNIT) FAIL TO START

Table 19.1-26 US-APWR PRA Dominant Cutsets for Each Initiating Event (Sheet 17 of 39)
Feedwater Line Break (Sheet 1 of 2)

Rank	Cutsets Freq. (/RY)	Percent (%)	Cutsets	Basic Event Name
1	2.1E-11	3.4	!12FWLB	FEED WATER LINE BREAK
			EFWCF2CVOD008-ALL	EFS-VLV-008A,B FAIL TO OPEN (CCF)
			HPIOO02FWBD-S	(HE) FAIL TO OPEN SAFETY DEPRESSURIZATION VALVE
2	1.4E-11	2.4	!12FWLB	FEED WATER LINE BREAK
			EFWCF4CVOD012-ALL	EFS-VLV-012A,B,C,D FAIL TO OPEN (CCF)
			HPIOO02FWBD-S	(HE) FAIL TO OPEN SAFETY DEPRESSURIZATION VALVE
3	1.4E-11	2.4	!12FWLB	FEED WATER LINE BREAK
			EFWCF4CVOD018-ALL	EFS-VLV-018A,B,C,D FAIL TO OPEN (CCF)
			HPIOO02FWBD-S	(HE) FAIL TO OPEN SAFETY DEPRESSURIZATION VALVE
4	1.3E-11	2.1	!12FWLB	FEED WATER LINE BREAK
			EFWPTAD001D	EFS-MPP-001D (D-EFW PUMP) FAIL TO START
			HPIOO01SDVDAS	(HE) FAIL TO OPEN SAFETY DEPRESSURIZATION VALVE BY DAS
			SGNBTSWCCF2	GROUP-2 APPLICATION SOFTWARE CCF
5	1.3E-11	2.1	!12FWLB	FEED WATER LINE BREAK
			EFWPTAD001D	EFS-MPP-001D (D-EFW PUMP) FAIL TO START
			SGNBTSWCCF2	GROUP-2 APPLICATION SOFTWARE CCF
			SGNOO01S	(HE) FAIL TO START SAFETY INJECTION PUMP BY DAS
6	1.2E-11	2.0	!12FWLB	FEED WATER LINE BREAK
			HPIOO02FWBD-S	(HE) FAIL TO OPEN SAFETY DEPRESSURIZATION VALVE
			RTPCF4ICYRRT7001-ALL	SG WATER LEVEL SENSOR (NARROW RANGE) CCF

Table 19.1-26 US-APWR PRA Dominant Cutsets for Each Initiating Event (Sheet 18 of 39)
Feedwater Line Break (Sheet 2 of 2)

Rank	Cutsets Freq. (/RY)	Percent (%)	Cutsets	Basic Event Name
7	1.2E-11	1.9	!12FWLB	FEED WATER LINE BREAK
			EFWOO01006AB	(HE) FAIL TO CHANGEOVER EFW PIT
			EFWPTAD001A	EFS-MPP-001A (A-EFW PUMP) FAIL TO START
			HPIOO02FWBD-S	(HE) FAIL TO OPEN SAFETY DEPRESSURIZATION VALVE
			SWSTMPE001B	EWS-MPP-001B (B-ESW PUMP) TEST & MAINTENANCE
8	1.0E-11	1.7	!12FWLB	FEED WATER LINE BREAK
			HPIOO01SDVDAS	(HE) FAIL TO OPEN SAFETY DEPRESSURIZATION VALVE BY DAS
			OPSLOOP	CONSEQUENTIAL LOOP GIVEN A REACTOR TRIP
			SGNBTSWCCF2	GROUP-2 APPLICATION SOFTWARE CCF
9	1.0E-11	1.7	!12FWLB	FEED WATER LINE BREAK
			OPSLOOP	CONSEQUENTIAL LOOP GIVEN A REACTOR TRIP
			SGNBTSWCCF2	GROUP-2 APPLICATION SOFTWARE CCF
			SGNOO01S	(HE) FAIL TO START SAFETY INJECTION PUMP BY DAS
10	9.6E-12	1.6	!12FWLB	FEED WATER LINE BREAK
			EFWOO01006AB	(HE) FAIL TO CHANGEOVER EFW PIT
			EFWPTAD001A	EFS-MPP-001A (A-EFW PUMP) FAIL TO START
			HPIOO02FWBD-S	(HE) FAIL TO OPEN SAFETY DEPRESSURIZATION VALVE
			VCWCHBD001B	VWS-MEQ-001B (B-ESSENTIAL CHILLER UNIT) FAIL TO START

Table 19.1-26 US-APWR PRA Dominant Cutsets for Each Initiating Event (Sheet 19 of 39)
General Transient (Sheet 1 of 3)

Rank	Cutsets Freq. (/RY)	Percent (%)	Cutsets	Basic Event Name
1	7.2E-10	3.7	!13TRANS	GENERAL TRANSIENT
			EFWCF2CVOD008-ALL	EFS-VLV-008A,B FAIL TO OPEN (CCF)
			HPIOO02FWBD	(HE) FAIL TO OPEN SAFETY DEPRESSURIZATION VALVE AND START SAFETY INJECTION PUMP
			MFWHARD	MFW SYSTEM FAILURE
2	5.2E-10	2.7	!13TRANS	GENERAL TRANSIENT
			EFWPTAD001A	EFS-MPP-001A (A-EFW PUMP) FAIL TO START
			RTPBTSWCCF	BASIC SOFTWARE CCF
3	5.0E-10	2.6	!13TRANS	GENERAL TRANSIENT
			EFWCF4CVOD018-ALL	EFS-VLV-018A,B,C,D FAIL TO OPEN (CCF)
			HPIOO02FWBD	(HE) FAIL TO OPEN SAFETY DEPRESSURIZATION VALVE AND START SAFETY INJECTION PUMP
			MFWHARD	MFW SYSTEM FAILURE
4	5.0E-10	2.6	!13TRANS	GENERAL TRANSIENT
			EFWCF4CVOD012-ALL	EFS-VLV-012A,B,C,D FAIL TO OPEN (CCF)
			HPIOO02FWBD	(HE) FAIL TO OPEN SAFETY DEPRESSURIZATION VALVE AND START SAFETY INJECTION PUMP
			MFWHARD	MFW SYSTEM FAILURE
5	4.1E-10	2.2	!13TRANS	GENERAL TRANSIENT
			HPIOO02FWBD	(HE) FAIL TO OPEN SAFETY DEPRESSURIZATION VALVE AND START SAFETY INJECTION PUMP
			MFWHARD	MFW SYSTEM FAILURE
			RTPCF4ICYRRT7001-ALL	SG WATER LEVEL SENSOR (NARROW RANGE) CCF

Table 19.1-26 US-APWR PRA Dominant Cutsets for Each Initiating Event (Sheet 20 of 39)
General Transient (Sheet 2 of 3)

Rank	Cutsets Freq. (/RY)	Percent (%)	Cutsets	Basic Event Name
6	4.0E-10	2.1	!13TRANS	GENERAL TRANSIENT
			EFWOO01006AB	(HE) FAIL TO CHANGEOVER EFW PIT
			EFWPTAD001A	EFS-MPP-001A (A-EFW PUMP) FAIL TO START
			HPIOO02FWBD	(HE) FAIL TO OPEN SAFETY DEPRESSURIZATION VALVE AND START SAFETY INJECTION PUMP
			MFWHARD	MFW SYSTEM FAILURE
			SWSTMPE001B	EWS-MPP-001B (B-ESW PUMP) TEST & MAINTENANCE
7	4.0E-10	2.1	!13TRANS	GENERAL TRANSIENT
			EFWTMTA001A	EFS-MPP-001A (A-EFW PUMP) TEST & MAINTENANCE
			RTPBTSWCCF	BASIC SOFTWARE CCF
8	3.9E-10	2.0	!13TRANS	GENERAL TRANSIENT
			EFWCF2CVOD008-ALL	EFS-VLV-008A,B FAIL TO OPEN (CCF)
			HPIOO02FWBD-DP2	(HE) FAIL TO OPEN SAFETY DEPRESSURIZATION VALVE AND START SAFETY INJECTION PUMP
			MFWOO02R	(HE) FAIL TO RECOVER MFWS
9	3.4E-10	1.8	!13TRANS	GENERAL TRANSIENT
			EFWOO01006AB	(HE) FAIL TO CHANGEOVER EFW PIT
			EFWPTAD001A	EFS-MPP-001A (A-EFW PUMP) FAIL TO START
			HPIOO02FWBD	(HE) FAIL TO OPEN SAFETY DEPRESSURIZATION VALVE AND START SAFETY INJECTION PUMP
			MFWHARD	MFW SYSTEM FAILURE
			VCWCHBD001B	VWS-MEQ-001B (B-ESSENTIAL CHILLER UNIT) FAIL TO START

Table 19.1-26 US-APWR PRA Dominant Cutsets for Each Initiating Event (Sheet 21 of 39)
General Transient (Sheet 3 of 3)

Rank	Cutsets Freq. (/RY)	Percent (%)	Cutsets	Basic Event Name
10	3.1E-10	1.6	!13TRANS	GENERAL TRANSIENT
			EFWOO01006AB	(HE) FAIL TO CHANGEOVER EFW PIT
			EFWTMTA001A	EFS-MPP-001A (A-EFW PUMP) TEST & MAINTENANCE
			HPIOO02FWBD	(HE) FAIL TO OPEN SAFETY DEPRESSURIZATION VALVE AND START SAFETY INJECTION PUMP
			MFWHARD	MFW SYSTEM FAILURE
			SWSTMPE001B	EWS-MPP-001B (B-ESW PUMP) TEST & MAINTENANCE

Table 19.1-26 US-APWR PRA Dominant Cutsets for Each Initiating Event (Sheet 22 of 39)
Loss of Feedwater Flow (Sheet 1 of 3)

Rank	Cutsets Freq. (/RY)	Percent (%)	Cutsets	Basic Event Name
1	1.7E-09	6.6	!14LOFF	LOSS OF FEED WATER FLOW
			EFWCF2CVOD008-ALL	EFS-VLV-008A,B FAIL TO OPEN (CCF)
			HPIOO02FWBD	(HE) FAIL TO OPEN SAFETY DEPRESSURIZATION VALVE AND START SAFETY INJECTION PUMP
2	1.2E-09	4.7	!14LOFF	LOSS OF FEED WATER FLOW
			EFWCF4CVOD018-ALL	EFS-VLV-018A,B,C,D FAIL TO OPEN (CCF)
			HPIOO02FWBD	(HE) FAIL TO OPEN SAFETY DEPRESSURIZATION VALVE AND START SAFETY INJECTION PUMP
3	1.2E-09	4.7	!14LOFF	LOSS OF FEED WATER FLOW
			EFWCF4CVOD012-ALL	EFS-VLV-012A,B,C,D FAIL TO OPEN (CCF)
			HPIOO02FWBD	(HE) FAIL TO OPEN SAFETY DEPRESSURIZATION VALVE AND START SAFETY INJECTION PUMP
4	9.8E-10	3.8	!14LOFF	LOSS OF FEED WATER FLOW
			HPIOO02FWBD	(HE) FAIL TO OPEN SAFETY DEPRESSURIZATION VALVE AND START SAFETY INJECTION PUMP
			RTPCF4ICYRRT7001-ALL	SG WATER LEVEL SENSOR (NARROW RANGE) CCF
5	9.6E-10	3.7	!14LOFF	LOSS OF FEED WATER FLOW
			EFWOO01006AB	(HE) FAIL TO CHANGEOVER EFW PIT
			EFWPTAD001A	EFS-MPP-001A (A-EFW PUMP) FAIL TO START
			HPIOO02FWBD	(HE) FAIL TO OPEN SAFETY DEPRESSURIZATION VALVE AND START SAFETY INJECTION PUMP
			SWSTMPE001B	EWS-MPP-001B (B-ESW PUMP) TEST & MAINTENANCE

Table 19.1-26 US-APWR PRA Dominant Cutsets for Each Initiating Event (Sheet 23 of 39)
Loss of Feedwater Flow (Sheet 2 of 3)

Rank	Cutsets Freq. (/RY)	Percent (%)	Cutsets	Basic Event Name
6	8.0E-10	3.1	!14LOFF	LOSS OF FEED WATER FLOW
			EFWOO01006AB	(HE) FAIL TO CHANGEOVER EFW PIT
			EFWPTAD001A	EFS-MPP-001A (A-EFW PUMP) FAIL TO START
			HPIOO02FWBD	(HE) FAIL TO OPEN SAFETY DEPRESSURIZATION VALVE AND START SAFETY INJECTION PUMP
			VCWCHBD001B	VWS-MEQ-001B (B-ESSENTIAL CHILLER UNIT) FAIL TO START
7	7.3E-10	2.8	!14LOFF	LOSS OF FEED WATER FLOW
			EFWOO01006AB	(HE) FAIL TO CHANGEOVER EFW PIT
			EFWTMTA001A	EFS-MPP-001A (A-EFW PUMP) TEST & MAINTENANCE
			HPIOO02FWBD	(HE) FAIL TO OPEN SAFETY DEPRESSURIZATION VALVE AND START SAFETY INJECTION PUMP
			SWSTMPE001B	EWS-MPP-001B (B-ESW PUMP) TEST & MAINTENANCE
8	6.4E-10	2.5	!14LOFF	LOSS OF FEED WATER FLOW
			EFWOO01006AB	(HE) FAIL TO CHANGEOVER EFW PIT
			EFWPTAD001A	EFS-MPP-001A (A-EFW PUMP) FAIL TO START
			HPIOO02FWBD	(HE) FAIL TO OPEN SAFETY DEPRESSURIZATION VALVE AND START SAFETY INJECTION PUMP
			VCWTMPZ001B	VWS-MPP-001B (B-ESSENTIAL CHILLED WATER PUMP) TEST & MAINTE-NANCE
9	6.1E-10	2.4	!14LOFF	LOSS OF FEED WATER FLOW
			EFWCF4MVFC017-ALL	EFS-MOV-017A,B,C,D FAIL TO CONTROL (CCF)
			HPIOO02FWBD	(HE) FAIL TO OPEN SAFETY DEPRESSURIZATION VALVE AND START SAFETY INJECTION PUMP

Table 19.1-26 US-APWR PRA Dominant Cutsets for Each Initiating Event (Sheet 24 of 39)
Loss of Feedwater Flow (Sheet 3 of 3)

Rank	Cutsets Freq. (/RY)	Percent (%)	Cutsets	Basic Event Name
10	6.1E-10	2.4	!14LOFF	LOSS OF FEED WATER FLOW
			EFWOO01006AB	(HE) FAIL TO CHANGEOVER EFW PIT
			EFWTMTA001A	EFS-MPP-001A (A-EFW PUMP) TEST & MAINTENANCE
			HPIOO02FWBD	(HE) FAIL TO OPEN SAFETY DEPRESSURIZATION VALVE AND START SAFETY INJECTION PUMP
			VCWCHBD001B	VWS-MEQ-001B (B-ESSENTIAL CHILLER UNIT) FAIL TO START

Table 19.1-26 US-APWR PRA Dominant Cutsets for Each Initiating Event (Sheet 25 of 39)
Loss of Component Cooling Water (Sheet 1 of 2)

Rank	Cutsets Freq. (/RY)	Percent (%)	Cutsets	Basic Event Name
1	1.4E-07	66.3	!15LOCCW	LOSS OF COMPONENT COOLING WATER
			ACWOO02CT-DP2	(HE) FAIL TO ESTABLISH THE ALTERNATE CCWS BY NON-ESSENTIAL CHILLED WATER SYSTEM COOLING TOWER
			ACWOO02FS	(HE) FAIL TO ESTABLISH THE ALTERNATE CCWS BY FIRE PROTECTION WATER SUPPLY SYSTEM
			RCP----SEAL	RCP SEAL LOCA
2	1.1E-08	5.3	!15LOCCW	LOSS OF COMPONENT COOLING WATER
			EFWCF2PTAD001AD-ALL	EFS-MPP-001A,D (EFW PUMP) FAIL TO START (CCF)
			RCP----SEAL	RCP SEAL LOCA
3	5.0E-09	2.4	!15LOCCW	LOSS OF COMPONENT COOLING WATER
			CHICF2PMBD001-ALL	CVS-MPP-001A,B (CHI PUMP) FAIL TO START (CCF)
			RCP----SEAL	RCP SEAL LOCA
4	2.7E-09	1.3	!15LOCCW	LOSS OF COMPONENT COOLING WATER
			EFWCF2PTSR001AD-ALL	EFS-MPP-001A,D (EFW PUMP) FAIL TO RUN DURING FIRST HOUR OF OPERATION (CCF)
			RCP----SEAL	RCP SEAL LOCA
5	2.7E-09	1.3	!15LOCCW	LOSS OF COMPONENT COOLING WATER
			EFWOO01006AB	(HE) FAIL TO CHANGEOVER EFW PIT
			EFWPTAD001A	EFS-MPP-001A (A-EFW PUMP) FAIL TO START
			RCP----SEAL	RCP SEAL LOCA

Table 19.1-26 US-APWR PRA Dominant Cutsets for Each Initiating Event (Sheet 26 of 39)
Loss of Component Cooling Water (Sheet 2 of 2)

Rank	Cutsets Freq. (/RY)	Percent (%)	Cutsets	Basic Event Name
6	2.7E-09	1.3	!15LOCCW	LOSS OF COMPONENT COOLING WATER
			EFWOO01006AB	(HE) FAIL TO CHANGEOVER EFW PIT
			EFWPTAD001D	EFS-MPP-001D (D-EFW PUMP) FAIL TO START
			RCP----SEAL	RCP SEAL LOCA
7	2.4E-09	1.2	!15LOCCW	LOSS OF COMPONENT COOLING WATER
			RCP----SEAL	RCP SEAL LOCA
			SGNBTSWCCF3	NON-SAFETY (PCMS) APPLICATION SOFTWARE CCF
8	2.2E-09	1.1	!15LOCCW	LOSS OF COMPONENT COOLING WATER
			ACWOO02FS	(HE) FAIL TO ESTABLISH THE ALTERNATE CCWS BY FIRE PROTECTION WATER SUPPLY SYSTEM
			ACWTMPZ351A	VWS-MPP-351A (A-CONDENSER WATER PUMP) TEST & MAINTENANCE
			RCP----SEAL	RCP SEAL LOCA
9	2.1E-09	0.98	!15LOCCW	LOSS OF COMPONENT COOLING WATER
			EFWOO01006AB	(HE) FAIL TO CHANGEOVER EFW PIT
			EFWTMTA001A	EFS-MPP-001A (A-EFW PUMP) TEST & MAINTENANCE
			RCP----SEAL	RCP SEAL LOCA
10	2.1E-09	0.98	!15LOCCW	LOSS OF COMPONENT COOLING WATER
			EFWOO01006AB	(HE) FAIL TO CHANGEOVER EFW PIT
			EFWTMTA001D	EFS-MPP-001D (D-EFW PUMP) TEST & MAINTENANCE
			RCP----SEAL	RCP SEAL LOCA

Table 19.1-26 US-APWR PRA Dominant Cutsets for Each Initiating Event (Sheet 27 of 39)
Loss of Partial Component Cooling Water (Sheet 1 of 2)

Rank	Cutsets Freq. (/RY)	Percent (%)	Cutsets	Basic Event Name
1	1.8E-09	11.4	!16PLOCW	PARTIAL LOSS OF COMPONENT COOLING WATER
			RCP----SEAL	RCP SEAL LOCA
			SGNBTSWCCF2	GROUP-2 APPLICATION SOFTWARE CCF
			SGNOO01S	(HE) FAIL TO START SAFETY INJECTION PUMP BY DAS
2	9.1E-10	5.6	!16PLOCW	PARTIAL LOSS OF COMPONENT COOLING WATER
			EFWOO01006AB	(HE) FAIL TO CHANGEOVER EFW PIT
			EFWPTAD001A	EFS-MPP-001A (A-EFW PUMP) FAIL TO START
			HPIOO02FWBD-S	(HE) FAIL TO OPEN SAFETY DEPRESSURIZATION VALVE
3	6.9E-10	4.3	!16PLOCW	PARTIAL LOSS OF COMPONENT COOLING WATER
			EFWOO01006AB	(HE) FAIL TO CHANGEOVER EFW PIT
			EFWTMTA001A	EFS-MPP-001A (A-EFW PUMP) TEST & MAINTENANCE
			HPIOO02FWBD-S	(HE) FAIL TO OPEN SAFETY DEPRESSURIZATION VALVE
4	3.9E-10	2.4	!16PLOCW	PARTIAL LOSS OF COMPONENT COOLING WATER
			RCP----SEAL	RCP SEAL LOCA
			SGNBTHWCCF	DIGITAL I&C HARDWARE CCF
			SGNOO01S	(HE) FAIL TO START SAFETY INJECTION PUMP BY DAS
5	3.5E-10	2.2	!16PLOCW	PARTIAL LOSS OF COMPONENT COOLING WATER
			EPSCF4DLLRGTG-ALL	CLASS-1E GTG A,B,C,D FAIL TO RUN AFTER FIRST HOUR OF OPERATION (CCF)
			EPSOO02RDG	(HE) FAIL TO CONNECT THE ALTERNATE AC POWER SOURCE TO CLASS 1E BUS
			OPSLOOP	CONSEQUENTIAL LOOP GIVEN A REACTOR TRIP
			RCP----SEAL	RCP SEAL LOCA

Table 19.1-26 US-APWR PRA Dominant Cutsets for Each Initiating Event (Sheet 28 of 39)
Loss of Partial Component Cooling Water (Sheet 2 of 2)

Rank	Cutsets Freq. (/RY)	Percent (%)	Cutsets	Basic Event Name
6	3.3E-10	2.1	!16PLOCW	PARTIAL LOSS OF COMPONENT COOLING WATER
			EFWOO01006AB	(HE) FAIL TO CHANGEOVER EFW PIT
			EFWPTSR001A	EFS-MPP-001A (A-EFW PUMP) FAIL TO RUN DURING FIRST HOUR OF OPERATION
			HPIOO02FWBD-S	(HE) FAIL TO OPEN SAFETY DEPRESSURIZATION VALVE
7	3.2E-10	2.0	!16PLOCW	PARTIAL LOSS OF COMPONENT COOLING WATER
			RCP----SEAL	RCP SEAL LOCA
			RTPBTSWCCF	BASIC SOFTWARE CCF
8	3.2E-10	2.0	!16PLOCW	PARTIAL LOSS OF COMPONENT COOLING WATER
			RCP----SEAL	RCP SEAL LOCA
			RTPDASF	DAS FAILURE
			SGNBTSWCCF2	GROUP-2 APPLICATION SOFTWARE CCF
9	2.9E-10	1.8	!16PLOCW	PARTIAL LOSS OF COMPONENT COOLING WATER
			EPSCF4DLLRGTG-ALL	CLASS-1E GTG A,B,C,D FAIL TO RUN AFTER FIRST HOUR OF OPERATION (CCF)
			EPSDLLRAACB-L2	B-AAC FAIL TO LOAD AND RUN AFTER FIRST HOUR OF OPERATION
			OPSLOOP	CONSEQUENTIAL LOOP GIVEN A REACTOR TRIP
			RCP----SEAL	RCP SEAL LOCA
10	2.1E-10	1.3	!16PLOCW	PARTIAL LOSS OF COMPONENT COOLING WATER
			EFWOO01006AB	(HE) FAIL TO CHANGEOVER EFW PIT
			EFWPTLR001A	EFS-MPP-001A (A-EFW PUMP) FAIL TO RUN AFTER FIRST HOUR OF OPERATION
			HPIOO02FWBD-S	(HE) FAIL TO OPEN SAFETY DEPRESSURIZATION VALVE

Table 19.1-26 US-APWR PRA Dominant Cutsets for Each Initiating Event (Sheet 29 of 39)
Loss of Offsite Power (Sheet 1 of 4)

Rank	Cutsets Freq. (/RY)	Percent (%)	Cutsets	Basic Event Name
1	1.8E-07	38.4	!19LOOP	LOSS OF OFFSITE POWER
			EPSCF4DLLRGTG-ALL	CLASS-1E GTG A,B,C,D FAIL TO RUN AFTER FIRST HOUR OF OPERATION (CCF)
			EPSOO02RDG	(HE) FAIL TO CONNECT THE ALTERNATE AC POWER SOURCE TO CLASS 1E BUS
			OPS----PRBF	POWER RECOVERY (1H)
			OPS----PRCF	POWER RECOVERY (3H)
			RCP----SEAL	RCP SEAL LOCA
2	3.8E-08	8.2	!19LOOP	LOSS OF OFFSITE POWER
			EPSCF4DLADGTG-ALL	CLASS-1E GTG A,B,C,D FAIL TO START (CCF)
			EPSOO02RDG	(HE) FAIL TO CONNECT THE ALTERNATE AC POWER SOURCE TO CLASS 1E BUS
			OPS----PRBF	POWER RECOVERY (1H)
			OPS----PRCF	POWER RECOVERY (3H)
			RCP----SEAL	RCP SEAL LOCA
3	2.8E-08	6.1	!19LOOP	LOSS OF OFFSITE POWER
			EPSCF4DLSRGTG-ALL	CLASS-1E GTG A,B,C,D FAIL TO RUN DURING FIRST HOUR OF OPERATION (CCF)
			EPSOO02RDG	(HE) FAIL TO CONNECT THE ALTERNATE AC POWER SOURCE TO CLASS 1E BUS
			OPS----PRBF	POWER RECOVERY (1H)
			OPS----PRCF	POWER RECOVERY (3H)
			RCP----SEAL	RCP SEAL LOCA

Table 19.1-26 US-APWR PRA Dominant Cutsets for Each Initiating Event (Sheet 30 of 39)
Loss of Offsite Power (Sheet 2 of 4)

Rank	Cutsets Freq. (/RY)	Percent (%)	Cutsets	Basic Event Name
4	1.3E-08	2.7	!19LOOP	LOSS OF OFFSITE POWER
			EPSCF2DLLRAAC-ALL	AAC A,B FAIL TO RUN AFTER FIRST HOUR OF OPERATION (CCF)
			EPSCF4DLLRGTG-ALL	CLASS-1E GTG A,B,C,D FAIL TO RUN AFTER FIRST HOUR OF OPERATION (CCF)
			OPS----PRBF	POWER RECOVERY (1H)
			OPS----PRCF	POWER RECOVERY (3H)
			RCP----SEAL	RCP SEAL LOCA
5	1.1E-08	2.4	!19LOOP	LOSS OF OFFSITE POWER
			ACWOO02CT-DP2	(HE) FAIL TO ESTABLISH THE ALTERNATE CCWS BY NON-ESSENTIAL CHILLED WATER SYSTEM COOLING TOWER
			ACWOO02FS	(HE) FAIL TO ESTABLISH THE ALTERNATE CCWS BY FIRE PROTECTION WATER SUPPLY SYSTEM
			RCP----SEAL	RCP SEAL LOCA
			SWSCF4PMBD001-R-ALL	EWS-MPP-001A,B,C,D (ESW PUMP) FAIL TO RE-START (CCF)
6	6.8E-09	1.5	!19LOOP	LOSS OF OFFSITE POWER
			EPSCF4SEFFGTG-ALL	CLASS-1E GTG A,B,C,D SEQUENCER FAIL TO OPERATE (CCF)
			EPSOO02RDG	(HE) FAIL TO CONNECT THE ALTERNATE AC POWER SOURCE TO CLASS 1E BUS
			OPS----PRBF	POWER RECOVERY (1H)
			OPS----PRCF	POWER RECOVERY (3H)
			RCP----SEAL	RCP SEAL LOCA

Table 19.1-26 US-APWR PRA Dominant Cutsets for Each Initiating Event (Sheet 31 of 39)
Loss of Offsite Power (Sheet 3 of 4)

Rank	Cutsets Freq. (/RY)	Percent (%)	Cutsets	Basic Event Name
7	6.0E-09	1.3	!19LOOP	LOSS OF OFFSITE POWER
			ACWOO02CT-DP2	(HE) FAIL TO ESTABLISH THE ALTERNATE CCWS BY NON-ESSENTIAL CHILLED WATER SYSTEM COOLING TOWER
			ACWOO02FS	(HE) FAIL TO ESTABLISH THE ALTERNATE CCWS BY FIRE PROTECTION WATER SUPPLY SYSTEM
			CWSCF4PCBD001-R-ALL	NCS-MPP-001A,B,C,D (CCW PUMP) FAIL TO RE-START (CCF)
			RCP----SEAL	RCP SEAL LOCA
8	3.9E-09	0.85	!19LOOP	LOSS OF OFFSITE POWER
			EPSOO02RDG	(HE) FAIL TO CONNECT THE ALTERNATE AC POWER SOURCE TO CLASS 1E BUS
			OPS----PRBS	POWER RECOVERY SUCCESS (1H)
			RCP----SEAL	RCP SEAL LOCA
			SGNBTSWCCF2	GROUP-2 APPLICATION SOFTWARE CCF
9	3.6E-09	0.78	!19LOOP	LOSS OF OFFSITE POWER
			EPSCF4CBFC52EPS-ALL	EPS 52/EPSA,B,C,D (BREAKER) FAIL TO CLOSE (CCF)
			EPSOO02RDG	(HE) FAIL TO CONNECT THE ALTERNATE AC POWER SOURCE TO CLASS 1E BUS
			OPS----PRBF	POWER RECOVERY (1H)
			OPS----PRCF	POWER RECOVERY (3H)
			RCP----SEAL	RCP SEAL LOCA

Table 19.1-26 US-APWR PRA Dominant Cutsets for Each Initiating Event (Sheet 32 of 39)
Loss of Offsite Power (Sheet 4 of 4)

Rank	Cutsets Freq. (/RY)	Percent (%)	Cutsets	Basic Event Name
10	2.8E-09	0.60	!19LOOP	LOSS OF OFFSITE POWER
			EPSCBFO52UAT-ALL	EPS 52/UATA,B,C,D (BREAKER) FAIL TO OPEN (CCF)
			EPSOO01UATRAT	(HE) FAIL TO SEPARATE 52/UATA,D,52/RATA,D (BREAKER) AT LOCAL
			OPS----PRBF	POWER RECOVERY (1H)
			OPS----PRCF	POWER RECOVERY (3H)
			RCP----SEAL	RCP SEAL LOCA

Table 19.1-26 US-APWR PRA Dominant Cutsets for Each Initiating Event (Sheet 33 of 39)
Anticipated Transient Without Scram (Sheet 1 of 2)

Rank	Cutsets Freq. (/RY)	Percent (%)	Cutsets	Basic Event Name
1	2.1E-08	46.1	!20ATWS	ANTICIPATED TRANSIENT
			RTPDASF	DAS FAILURE
			SGNBTHWCCF	DIGITAL I&C HARDWARE CCF
2	5.0E-09	10.8	!20ATWS	ANTICIPATED TRANSIENT
			RTPCRDF	ROD INJECTION FAILURE (4< RODS)
			RTPMTCF	UNFAVORABLE MODERATOR TEMPERATURE
3	1.8E-09	3.9	!20ATWS	ANTICIPATED TRANSIENT
			EBIOO02CVS	(HE) FAIL TO START BORIC ACID TRANSFER
			RTPCRDF	ROD INJECTION FAILURE (4< RODS)
4	1.2E-09	2.6	!20ATWS	ANTICIPATED TRANSIENT
			RTPCRDF	ROD INJECTION FAILURE (4< RODS)
			SWSTMPE001B	EWS-MPP-001B (B-ESW PUMP) TEST & MAINTENANCE
5	1.2E-09	2.6	!20ATWS	ANTICIPATED TRANSIENT
			RTPCF4AXFFRT-ALL	REACTOR TRIP BREAKER A1,A2,B1,B2,C1,C2,D1,D2 (CCF)
			RTPDASF	DAS FAILURE
			RTPMTCF	UNFAVORABLE MODERATOR TEMPERATURE
6	1.0E-09	2.2	!20ATWS	ANTICIPATED TRANSIENT
			RTPBTSWCCF	BASIC SOFTWARE CCF
			RTPDASF	DAS FAILURE

Table 19.1-26 US-APWR PRA Dominant Cutsets for Each Initiating Event (Sheet 34 of 39)
Anticipated Transient Without Scram (Sheet 2 of 2)

Rank	Cutsets Freq. (/RY)	Percent (%)	Cutsets	Basic Event Name
7	1.0E-09	2.2	!20ATWS	ANTICIPATED TRANSIENT
			RTPCRDF	ROD INJECTION FAILURE (4< RODS)
			TTPTSVF	TURBINE STOP VALVE FAILURE
8	1.0E-09	2.2	!20ATWS	ANTICIPATED TRANSIENT
			RTPCRDF	ROD INJECTION FAILURE (4< RODS)
			VCWCHBD001B	VWS-MEQ-001B (B-ESSENTIAL CHILLER UNIT) FAIL TO START
9	8.0E-10	1.7	!20ATWS	ANTICIPATED TRANSIENT
			RTPCRDF	ROD INJECTION FAILURE (4< RODS)
			VCWTMPZ001B	VWS-MPP-001B (B-ESSENTIAL CHILLED WATER PUMP) TEST & MAINTE-NANCE
10	6.5E-10	1.4	!20ATWS	ANTICIPATED TRANSIENT
			EFWPTAD001D	EFS-MPP-001D (D-EFW PUMP) FAIL TO START
			RTPCRDF	ROD INJECTION FAILURE (4< RODS)

Table 19.1-26 US-APWR PRA Dominant Cutsets for Each Initiating Event (Sheet 35 of 39)
Loss of Vital AC Bus (Sheet 1 of 3)

Rank	Cutsets Freq. (/RY)	Percent (%)	Cutsets	Basic Event Name
1	3.8E-10	17.6	!21LOAC	LOSS OF VITAL AC BUS
			EFWOO01006AB	(HE) FAIL TO CHANGEOVER EFW PIT
			EFWPTAD001A	EFS-MPP-001A (A-EFW PUMP) FAIL TO START
			HPIOO02FWBD	(HE) FAIL TO OPEN SAFETY DEPRESSURIZATION VALVE AND START SAFETY INJECTION PUMP
			MFWHARD	MFW SYSTEM FAILURE
2	2.9E-10	13.4	!21LOAC	LOSS OF VITAL AC BUS
			EFWOO01006AB	(HE) FAIL TO CHANGEOVER EFW PIT
			EFWTMTA001A	EFS-MPP-001A (A-EFW PUMP) TEST & MAINTENANCE
			HPIOO02FWBD	(HE) FAIL TO OPEN SAFETY DEPRESSURIZATION VALVE AND START SAFETY INJECTION PUMP
			MFWHARD	MFW SYSTEM FAILURE
3	2.0E-10	9.4	!21LOAC	LOSS OF VITAL AC BUS
			EFWOO01006AB	(HE) FAIL TO CHANGEOVER EFW PIT
			EFWPTAD001A	EFS-MPP-001A (A-EFW PUMP) FAIL TO START
			HPIOO02FWBD-DP2	(HE) FAIL TO OPEN SAFETY DEPRESSURIZATION VALVE AND START SAFETY INJECTION PUMP
			MFWOO02R	(HE) FAIL TO RECOVER MFWS
4	1.9E-10	8.9	!21LOAC	LOSS OF VITAL AC BUS
			RTPDASF	DAS FAILURE
			SGNBTHWCCF	DIGITAL I&C HARDWARE CCF

Table 19.1-26 US-APWR PRA Dominant Cutsets for Each Initiating Event (Sheet 36 of 39)
Loss of Vital AC Bus (Sheet 2 of 3)

Rank	Cutsets Freq. (/RY)	Percent (%)	Cutsets	Basic Event Name
5	1.5E-10	7.2	!21LOAC	LOSS OF VITAL AC BUS
			EFWOO01006AB	(HE) FAIL TO CHANGEOVER EFW PIT
			EFWTMTA001A	EFS-MPP-001A (A-EFW PUMP) TEST & MAINTENANCE
			HPIOO02FWBD-DP2	(HE) FAIL TO OPEN SAFETY DEPRESSURIZATION VALVE AND START SAFETY INJECTION PUMP
			MFWOO02R	(HE) FAIL TO RECOVER MFWS
6	1.4E-10	6.4	!21LOAC	LOSS OF VITAL AC BUS
			EFWOO01006AB	(HE) FAIL TO CHANGEOVER EFW PIT
			EFWPTSR001A	EFS-MPP-001A (A-EFW PUMP) FAIL TO RUN DURING FIRST HOUR OF OPERATION
			HPIOO02FWBD	(HE) FAIL TO OPEN SAFETY DEPRESSURIZATION VALVE AND START SAFETY INJECTION PUMP
			MFWHARD	MFW SYSTEM FAILURE
7	8.9E-11	4.1	!21LOAC	LOSS OF VITAL AC BUS
			EFWOO01006AB	(HE) FAIL TO CHANGEOVER EFW PIT
			EFWPTLR001A	EFS-MPP-001A (A-EFW PUMP) FAIL TO RUN AFTER FIRST HOUR OF OPERATION
			HPIOO02FWBD	(HE) FAIL TO OPEN SAFETY DEPRESSURIZATION VALVE AND START SAFETY INJECTION PUMP
			MFWHARD	MFW SYSTEM FAILURE

Table 19.1-26 US-APWR PRA Dominant Cutsets for Each Initiating Event (Sheet 37 of 39)
Loss of Vital AC Bus (Sheet 3 of 3)

Rank	Cutsets Freq. (/RY)	Percent (%)	Cutsets	Basic Event Name
8	7.4E-11	3.4	!21LOAC	LOSS OF VITAL AC BUS
			EFWOO01006AB	(HE) FAIL TO CHANGEOVER EFW PIT
			EFWPTSR001A	EFS-MPP-001A (A-EFW PUMP) FAIL TO RUN DURING FIRST HOUR OF OPERATION
			HPIOO02FWBD-DP2	(HE) FAIL TO OPEN SAFETY DEPRESSURIZATION VALVE AND START SAFETY INJECTION PUMP
			MFWOO02R	(HE) FAIL TO RECOVER MFWS
9	5.5E-11	2.6	!21LOAC	LOSS OF VITAL AC BUS
			EFWMVOD103A	EFS-MOV-103A FAIL TO OPEN
			EFWOO01006AB	(HE) FAIL TO CHANGEOVER EFW PIT
			HPIOO02FWBD	(HE) FAIL TO OPEN SAFETY DEPRESSURIZATION VALVE AND START SAFETY INJECTION PUMP
			MFWHARD	MFW SYSTEM FAILURE
10	4.8E-11	2.2	!21LOAC	LOSS OF VITAL AC BUS
			EFWOO01006AB	(HE) FAIL TO CHANGEOVER EFW PIT
			EFWPTLR001A	EFS-MPP-001A (A-EFW PUMP) FAIL TO RUN AFTER FIRST HOUR OF OPERATION
			HPIOO02FWBD-DP2	(HE) FAIL TO OPEN SAFETY DEPRESSURIZATION VALVE AND START SAFETY INJECTION PUMP
			MFWOO02R	(HE) FAIL TO RECOVER MFWS

Table 19.1-26 US-APWR PRA Dominant Cutsets for Each Initiating Event (Sheet 38 of 39)
Loss of Vital DC Bus (Sheet 1 of 2)

Rank	Cutsets Freq. (/RY)	Percent (%)	Cutsets	Basic Event Name
1	2.5E-11	37.3	!22LODC	LOSS OF VITAL DC BUS
			RTPDASF	DAS FAILURE
			SGNBTHWCCF	DIGITAL I&C HARDWARE CCF
2	1.3E-12	2.0	!22LODC	LOSS OF VITAL DC BUS
			EPSOO02RDG	(HE) FAIL TO CONNECT THE ALTERNATE AC POWER SOURCE TO CLASS 1E BUS
			OPSLOOP	CONSEQUENTIAL LOOP GIVEN A REACTOR TRIP
			SGNBTSWCCF2	GROUP-2 APPLICATION SOFTWARE CCF
3	1.2E-12	1.8	!22LODC	LOSS OF VITAL DC BUS
			RTPBTSWCCF	BASIC SOFTWARE CCF
			RTPDASF	DAS FAILURE
4	1.1E-12	1.6	!22LODC	LOSS OF VITAL DC BUS
			EPSDLLRAACA-L2	A-AAC FAIL TO LOAD AND RUN AFTER FIRST HOUR OF OPERATION
			OPSLOOP	CONSEQUENTIAL LOOP GIVEN A REACTOR TRIP
			SGNBTSWCCF2	GROUP-2 APPLICATION SOFTWARE CCF
5	1.1E-12	1.6	!22LODC	LOSS OF VITAL DC BUS
			EFWCF2CVOD008-ALL	EFS-VLV-008A,B FAIL TO OPEN (CCF)
			HPIOO02FWBD	(HE) FAIL TO OPEN SAFETY DEPRESSURIZATION VALVE AND START SAFETY INJECTION PUMP
			MFWHARD	MFW SYSTEM FAILURE

Table 19.1-26 US-APWR PRA Dominant Cutsets for Each Initiating Event (Sheet 39 of 39)
Loss of Vital DC Bus (Sheet 2 of 2)

Rank	Cutsets Freq. (/RY)	Percent (%)	Cutsets	Basic Event Name
6	7.7E-13	1.2	!22LODC	LOSS OF VITAL DC BUS
			EFWPTAD001A	EFS-MPP-001A (A-EFW PUMP) FAIL TO START
			RTPBTSWCCF	BASIC SOFTWARE CCF
7	7.4E-13	1.1	!22LODC	LOSS OF VITAL DC BUS
			EPSTMDGAACA	A-AAC TEST & MAINTENANCE
			OPSLOOP	CONSEQUENTIAL LOOP GIVEN A REACTOR TRIP
			SGNBTSWCCF2	GROUP-2 APPLICATION SOFTWARE CCF
8	7.4E-13	1.1	!22LODC	LOSS OF VITAL DC BUS
			EFWCF4CVOD012-ALL	EFS-VLV-012A,B,C,D FAIL TO OPEN (CCF)
			HPIOO02FWBD	(HE) FAIL TO OPEN SAFETY DEPRESSURIZATION VALVE AND START SAFETY INJECTION PUMP
			MFWHARD	MFW SYSTEM FAILURE
9	7.4E-13	1.1	!22LODC	LOSS OF VITAL DC BUS
			EFWCF4CVOD018-ALL	EFS-VLV-018A,B,C,D FAIL TO OPEN (CCF)
			HPIOO02FWBD	(HE) FAIL TO OPEN SAFETY DEPRESSURIZATION VALVE AND START SAFETY INJECTION PUMP
			MFWHARD	MFW SYSTEM FAILURE
10	6.1E-13	0.91	!22LODC	LOSS OF VITAL DC BUS
			HPIOO02FWBD	(HE) FAIL TO OPEN SAFETY DEPRESSURIZATION VALVE AND START SAFETY INJECTION PUMP
			MFWHARD	MFW SYSTEM FAILURE
			RTPCF4ICYRRT7001-ALL	SG WATER LEVEL SENSOR (NARROW RANGE) CCF

Table 19.1-27 LOOP with Reactor Trip Resulting SBO Sequence Dominant Cutsets (Sheet 1 of 7)

Rank	Cutsets Freq. (/RY)	Percent (%)	Cutsets	Basic Event Name
1	1.8E-07	52.6	!19LOOP	LOSS OF OFFSITE POWER
			EPSCF4DLLRGTG-ALL	CLASS-1E GTG A,B,C,D FAIL TO RUN AFTER FIRST HOUR OF OPERATION (CCF)
			EPSOO02RDG	(HE) FAIL TO CONNECT THE ALTERNATE AC POWER SOURCE TO CLASS 1E BUS
			OPS----PRBF	POWER RECOVERY (1H)
			OPS----PRCF	POWER RECOVERY (3H)
			RCP----SEAL	RCP SEAL LOCA
2	3.8E-08	11.2	!19LOOP	LOSS OF OFFSITE POWER
			EPSCF4DLADGTG-ALL	CLASS-1E GTG A,B,C,D FAIL TO START (CCF)
			EPSOO02RDG	(HE) FAIL TO CONNECT THE ALTERNATE AC POWER SOURCE TO CLASS 1E BUS
			OPS----PRBF	POWER RECOVERY (1H)
			OPS----PRCF	POWER RECOVERY (3H)
			RCP----SEAL	RCP SEAL LOCA
3	2.8E-08	8.3	!19LOOP	LOSS OF OFFSITE POWER
			EPSCF4DLSRGTG-ALL	CLASS-1E GTG A,B,C,D FAIL TO RUN DURING FIRST HOUR OF OPERATION (CCF)
			EPSOO02RDG	(HE) FAIL TO CONNECT THE ALTERNATE AC POWER SOURCE TO CLASS 1E BUS
			OPS----PRBF	POWER RECOVERY (1H)
			OPS----PRCF	POWER RECOVERY (3H)
			RCP----SEAL	RCP SEAL LOCA

Table 19.1-27 LOOP with Reactor Trip Resulting SBO Sequence Dominant Cutsets (Sheet 2 of 7)

Rank	Cutsets Freq. (/RY)	Percent (%)	Cutsets	Basic Event Name
4	1.3E-08	3.7	!19LOOP	LOSS OF OFFSITE POWER
			EPSCF2DLLRAAC-ALL	AAC A,B FAIL TO RUN AFTER FIRST HOUR OF OPERATION (CCF)
			EPSCF4DLLRGTG-ALL	CLASS-1E GTG A,B,C,D FAIL TO RUN AFTER FIRST HOUR OF OPERATION (CCF)
			OPS----PRBF	POWER RECOVERY (1H)
			OPS----PRCF	POWER RECOVERY (3H)
			RCP----SEAL	RCP SEAL LOCA
5	6.8E-09	2.0	!19LOOP	LOSS OF OFFSITE POWER
			EPSCF4SEFFGTG-ALL	CLASS-1E GTG A,B,C,D SEQUENCER FAIL TO OPERATE (CCF)
			EPSOO02RDG	(HE) FAIL TO CONNECT THE ALTERNATE AC POWER SOURCE TO CLASS 1E BUS
			OPS----PRBF	POWER RECOVERY (1H)
			OPS----PRCF	POWER RECOVERY (3H)
			RCP----SEAL	RCP SEAL LOCA
6	3.6E-09	1.1	!19LOOP	LOSS OF OFFSITE POWER
			EPSCF4CBFC52EPS-ALL	EPS 52/EPSA,B,C,D (BREAKER) FAIL TO CLOSE (CCF)
			EPSOO02RDG	(HE) FAIL TO CONNECT THE ALTERNATE AC POWER SOURCE TO CLASS 1E BUS
			OPS----PRBF	POWER RECOVERY (1H)
			OPS----PRCF	POWER RECOVERY (3H)
			RCP----SEAL	RCP SEAL LOCA

Table 19.1-27 LOOP with Reactor Trip Resulting SBO Sequence Dominant Cutsets (Sheet 3 of 7)

Rank	Cutsets Freq. (/RY)	Percent (%)	Cutsets	Basic Event Name
7	2.8E-09	0.82	!19LOOP	LOSS OF OFFSITE POWER
			EPSCBFO52UAT-ALL	EPS 52/UATA,B,C,D (BREAKER) FAIL TO OPEN (CCF)
			EPSOO01UATRAT	(HE) FAIL TO SEPARATE 52/UATA,D,52/RATA,D (BREAKER) AT LOCAL
			OPS----PRBF	POWER RECOVERY (1H)
			OPS----PRCF	POWER RECOVERY (3H)
			RCP----SEAL	RCP SEAL LOCA
8	2.8E-09	0.82	!19LOOP	LOSS OF OFFSITE POWER
			EPSCBFO52RAT-ALL	EPS 52/RATA,B,C,D (BREAKER) FAIL TO OPEN (CCF)
			EPSOO01UATRAT	(HE) FAIL TO SEPARATE 52/UATA,D,52/RATA,D (BREAKER) AT LOCAL
			OPS----PRBF	POWER RECOVERY (1H)
			OPS----PRCF	POWER RECOVERY (3H)
			RCP----SEAL	RCP SEAL LOCA
9	2.7E-09	0.79	!19LOOP	LOSS OF OFFSITE POWER
			EPSCF2DLLRAAC-ALL	AAC A,B FAIL TO RUN AFTER FIRST HOUR OF OPERATION (CCF)
			EPSCF4DLADGTG-ALL	CLASS-1E GTG A,B,C,D FAIL TO START (CCF)
			OPS----PRBF	POWER RECOVERY (1H)
			OPS----PRCF	POWER RECOVERY (3H)
			RCP----SEAL	RCP SEAL LOCA

Table 19.1-27 LOOP with Reactor Trip Resulting SBO Sequence Dominant Cutsets (Sheet 4 of 7)

Rank	Cutsets Freq. (/RY)	Percent (%)	Cutsets	Basic Event Name
10	2.6E-09	0.77	!19LOOP	LOSS OF OFFSITE POWER
			EPSCF4DLLRGTG-ALL	CLASS-1E GTG A,B,C,D FAIL TO RUN AFTER FIRST HOUR OF OPERATION (CCF)
			EPSDLLRAACA-L2	A-AAC FAIL TO LOAD AND RUN AFTER FIRST HOUR OF OPERATION
			EPSDLLRAACB-L2	B-AAC FAIL TO LOAD AND RUN AFTER FIRST HOUR OF OPERATION
			OPS----PRBF	POWER RECOVERY (1H)
			OPS----PRCF	POWER RECOVERY (3H)
			RCP----SEAL	RCP SEAL LOCA
11	2.6E-09	0.76	!19LOOP	LOSS OF OFFSITE POWER
			EPSCF2DLADAAC-ALL	AAC A,B FAIL TO START (CCF)
			EPSCF4DLLRGTG-ALL	CLASS-1E GTG A,B,C,D FAIL TO RUN AFTER FIRST HOUR OF OPERATION (CCF)
			OPS----PRBF	POWER RECOVERY (1H)
			OPS----PRCF	POWER RECOVERY (3H)
			RCP----SEAL	RCP SEAL LOCA
12	2.0E-09	0.58	!19LOOP	LOSS OF OFFSITE POWER
			EPSCF2DLSRAAC-ALL	AAC A,B FAIL TO RUN DURING FIRST HOUR OF OPERATION (CCF)
			EPSCF4DLLRGTG-ALL	CLASS-1E GTG A,B,C,D FAIL TO RUN AFTER FIRST HOUR OF OPERATION (CCF)
			OPS----PRBF	POWER RECOVERY (1H)
			OPS----PRCF	POWER RECOVERY (3H)
			RCP----SEAL	RCP SEAL LOCA

Table 19.1-27 LOOP with Reactor Trip Resulting SBO Sequence Dominant Cutsets (Sheet 5 of 7)

Rank	Cutsets Freq. (/RY)	Percent (%)	Cutsets	Basic Event Name
13	2.0E-09	0.58	!19LOOP	LOSS OF OFFSITE POWER
			EPSCF2DLLRAAC-ALL	AAC A,B FAIL TO RUN AFTER FIRST HOUR OF OPERATION (CCF)
			EPSCF4DLSRGTG-ALL	CLASS-1E GTG A,B,C,D FAIL TO RUN DURING FIRST HOUR OF OPERATION (CCF)
			OPS----PRBF	POWER RECOVERY (1H)
			OPS----PRCF	POWER RECOVERY (3H)
			RCP----SEAL	RCP SEAL LOCA
14	1.8E-09	0.53	!19LOOP	LOSS OF OFFSITE POWER
			EPSOO02RDG	(HE) FAIL TO CONNECT THE ALTERNATE AC POWER SOURCE TO CLASS 1E BUS
			OPS----PRBF	POWER RECOVERY (1H)
			OPS----PRCF	POWER RECOVERY (3H)
			RCP----SEAL	RCP SEAL LOCA
			SGNBTSWCCF2	GROUP-2 APPLICATION SOFTWARE CCF
15	1.8E-09	0.53	!19LOOP	LOSS OF OFFSITE POWER
			EPSCF4DLLRGTG-ALL	CLASS-1E GTG A,B,C,D FAIL TO RUN AFTER FIRST HOUR OF OPERATION (CCF)
			EPSDLLRAACB-L2	B-AAC FAIL TO LOAD AND RUN AFTER FIRST HOUR OF OPERATION
			EPSTMDGAACA	A-AAC TEST & MAINTENANCE
			OPS----PRBF	POWER RECOVERY (1H)
			OPS----PRCF	POWER RECOVERY (3H)
			RCP----SEAL	RCP SEAL LOCA

Table 19.1-27 LOOP with Reactor Trip Resulting SBO Sequence Dominant Cutsets (Sheet 6 of 7)

Rank	Cutsets Freq. (/RY)	Percent (%)	Cutsets	Basic Event Name
16	1.8E-09	0.53	!19LOOP	LOSS OF OFFSITE POWER
			EPSCF4DLLRGTG-ALL	CLASS-1E GTG A,B,C,D FAIL TO RUN AFTER FIRST HOUR OF OPERATION (CCF)
			EPSDLLRAACA-L2	A-AAC FAIL TO LOAD AND RUN AFTER FIRST HOUR OF OPERATION
			EPSTMDGAACB	B-AAC TEST & MAINTENANCE
			OPS----PRBF	POWER RECOVERY (1H)
			OPS----PRCF	POWER RECOVERY (3H)
			RCP----SEAL	RCP SEAL LOCA
17	1.4E-09	0.40	!19LOOP	LOSS OF OFFSITE POWER
			EPSCF4CBSC52UAT-ALL	EPS 52/UATA,B,C,D (BREAKER) SPURIOUS CLOSE (CCF)
			OPS----PRBF	POWER RECOVERY (1H)
			OPS----PRCF	POWER RECOVERY (3H)
			RCP----SEAL	RCP SEAL LOCA
18	1.4E-09	0.40	!19LOOP	LOSS OF OFFSITE POWER
			EPSCF4CBSC52RAT-ALL	EPS 52/RATA,B,C,D (BREAKER) SPURIOUS CLOSE (CCF)
			OPS----PRBF	POWER RECOVERY (1H)
			OPS----PRCF	POWER RECOVERY (3H)
			RCP----SEAL	RCP SEAL LOCA

Table 19.1-27 LOOP with Reactor Trip Resulting SBO Sequence Dominant Cutsets (Sheet 7 of 7)

Rank	Cutsets Freq. (/RY)	Percent (%)	Cutsets	Basic Event Name
19	1.2E-09	0.35	!19LOOP	LOSS OF OFFSITE POWER
			EPSCF2SEFFAAC-ALL	AAC A,B SEQUENCER FAIL TO OPERATE (CCF)
			EPSCF4DLLRGTG-ALL	CLASS-1E GTG A,B,C,D FAIL TO RUN AFTER FIRST HOUR OF OPERATION (CCF)
			OPS----PRBF	POWER RECOVERY (1H)
			OPS----PRCF	POWER RECOVERY (3H)
			RCP----SEAL	RCP SEAL LOCA
20	8.5E-10	0.25	!19LOOP	LOSS OF OFFSITE POWER
			EPPBTSWCCF	BO-SIGNAL (TRAIN P1,2) SOFTWARE CCF
			EPSCF4DLLRGTG-ALL	CLASS-1E GTG A,B,C,D FAIL TO RUN AFTER FIRST HOUR OF OPERATION (CCF)
			OPS----PRBF	POWER RECOVERY (1H)
			OPS----PRCF	POWER RECOVERY (3H)
			RCP----SEAL	RCP SEAL LOCA

Table 19.1-28 LOCCW with Reactor Trip Sequence Dominant Cutsets (Sheet 1 of 3)

Rank	Cutsets Freq. (/RY)	Percent (%)	Cutsets	Basic Event Name
1	1.4E-07	84.8	!15LOCCW	LOSS OF COMPONENT COOLING WATER
			ACWOO02CT-DP2	(HE) FAIL TO ESTABLISH THE ALTERNATE CCWS BY NON-ESSENTIAL CHILLED WATER SYSTEM COOLING TOWER
			ACWOO02FS	(HE) FAIL TO ESTABLISH THE ALTERNATE CCWS BY FIRE PROTECTION WATER SUPPLY SYSTEM
			RCP----SEAL	RCP SEAL LOCA
2	5.0E-09	3.0	!15LOCCW	LOSS OF COMPONENT COOLING WATER
			CHICF2PMBD001-ALL	CVS-MPP-001A,B (CHI PUMP) FAIL TO START (CCF)
			RCP----SEAL	RCP SEAL LOCA
3	2.4E-09	1.5	!15LOCCW	LOSS OF COMPONENT COOLING WATER
			RCP----SEAL	RCP SEAL LOCA
			SGNBTSWCCF3	NON-SAFETY (PCMS) APPLICATION SOFTWARE CCF
4	2.2E-09	1.3	!15LOCCW	LOSS OF COMPONENT COOLING WATER
			ACWOO02FS	(HE) FAIL TO ESTABLISH THE ALTERNATE CCWS BY FIRE PROTECTION WATER SUPPLY SYSTEM
			ACWTMPZ351A	VWS-MPP-351A (A-CONDENSER WATER PUMP) TEST & MAINTENANCE
			RCP----SEAL	RCP SEAL LOCA
5	1.1E-09	0.70	!15LOCCW	LOSS OF COMPONENT COOLING WATER
			ACWCF2MVCD316-ALL	NCS-MOV-316A,B FAIL TO CLOSE (CCF)
			RCP----SEAL	RCP SEAL LOCA
6	1.1E-09	0.70	!15LOCCW	LOSS OF COMPONENT COOLING WATER
			ACWCF2MVOD324-ALL	NCS-MOV-324A,B FAIL TO OPEN (CCF)
			RCP----SEAL	RCP SEAL LOCA

Table 19.1-28 LOCCW with Reactor Trip Sequence Dominant Cutsets (Sheet 2 of 3)

Rank	Cutsets Freq. (/RY)	Percent (%)	Cutsets	Basic Event Name
7	1.1E-09	0.70	!15LOCCW	LOSS OF COMPONENT COOLING WATER
			ACWCF2MVOD322-ALL	NCS-MOV-322A,B FAIL TO OPEN (CCF)
			RCP----SEAL	RCP SEAL LOCA
8	5.9E-10	0.36	!15LOCCW	LOSS OF COMPONENT COOLING WATER
			CHIORPR080	CVS-FE-080 (ORIFICE) PLUG
			RCP----SEAL	RCP SEAL LOCA
9	5.9E-10	0.36	!15LOCCW	LOSS OF COMPONENT COOLING WATER
			CHIORPR060	CVS-FE-060 (ORIFICE) PLUG
			RCP----SEAL	RCP SEAL LOCA
10	5.9E-10	0.36	!15LOCCW	LOSS OF COMPONENT COOLING WATER
			CHIORPR070	CVS-FE-070 (ORIFICE) PLUG
			RCP----SEAL	RCP SEAL LOCA
11	5.9E-10	0.36	!15LOCCW	LOSS OF COMPONENT COOLING WATER
			CHIORPR090	CVS-FE-090 (ORIFICE) PLUG
			RCP----SEAL	RCP SEAL LOCA
12	5.5E-10	0.34	!15LOCCW	LOSS OF COMPONENT COOLING WATER
			ACWOO02FS	(HE) FAIL TO ESTABLISH THE ALTERNATE CCWS BY FIRE PROTECTION WATER SUPPLY SYSTEM
			ACWTMCT371A	VWS-MEQ-371A (A-COOLING TOWER) TEST & MAINTENANCE
			RCP----SEAL	RCP SEAL LOCA
13	4.1E-10	0.25	!15LOCCW	LOSS OF COMPONENT COOLING WATER
			ACWOO02FS	(HE) FAIL TO ESTABLISH THE ALTERNATE CCWS BY FIRE PROTECTION WATER SUPPLY SYSTEM
			ACWPMAD351A	VWS-MPP-351A (A-CONDENSER WATER PUMP) FAIL TO START
			RCP----SEAL	RCP SEAL LOCA

Table 19.1-28 LOCCW with Reactor Trip Sequence Dominant Cutsets (Sheet 3 of 3)

Rank	Cutsets Freq. (/RY)	Percent (%)	Cutsets	Basic Event Name
14	3.5E-10	0.21	!15LOCCW	LOSS OF COMPONENT COOLING WATER
			CHIPMBD001A-R	CVS-MPP-001A (A-CHI PUMP) FAIL TO RE-START
			CHITMPZ001B	CVS-MPP-001B (B-CHI PUMP) TEST & MAINTENANCE
			RCP----SEAL	RCP SEAL LOCA
15	2.9E-10	0.18	!15LOCCW	LOSS OF COMPONENT COOLING WATER
			CHICVOD179B	CVS-VLV-179B FAIL TO OPEN
			RCP----SEAL	RCP SEAL LOCA
16	2.9E-10	0.18	!15LOCCW	LOSS OF COMPONENT COOLING WATER
			CHICVOD179A	CVS-VLV-179A FAIL TO OPEN
			RCP----SEAL	RCP SEAL LOCA
17	2.9E-10	0.18	!15LOCCW	LOSS OF COMPONENT COOLING WATER
			CHICVOD182B	CVS-VLV-182B FAIL TO OPEN
			RCP----SEAL	RCP SEAL LOCA
18	2.9E-10	0.18	!15LOCCW	LOSS OF COMPONENT COOLING WATER
			CHICVOD181C	CVS-VLV-181C FAIL TO OPEN
			RCP----SEAL	RCP SEAL LOCA
19	2.9E-10	0.18	!15LOCCW	LOSS OF COMPONENT COOLING WATER
			CHICVOD181A	CVS-VLV-181A FAIL TO OPEN
			RCP----SEAL	RCP SEAL LOCA
20	2.9E-10	0.18	!15LOCCW	LOSS OF COMPONENT COOLING WATER
			CHICVOD182A	CVS-VLV-182A FAIL TO OPEN
			RCP----SEAL	RCP SEAL LOCA

Table 19.1-29 LOOP with Reactor Trip Resulting LOCCW Sequence Dominant Cutsets (Sheet 1 of 5)

Rank	Cutsets Freq. (/RY)	Percent (%)	Cutsets	Basic Event Name
1	1.1E-08	12.3	!19LOOP	LOSS OF OFFSITE POWER
			ACWOO02CT-DP2	(HE) FAIL TO ESTABLISH THE ALTERNATE CCWS BY NON-ESSENTIAL CHILLED WATER SYSTEM COOLING TOWER
			ACWOO02FS	(HE) FAIL TO ESTABLISH THE ALTERNATE CCWS BY FIRE PROTECTION WATER SUPPLY SYSTEM
			RCP----SEAL	RCP SEAL LOCA
			SWSCF4PMBD001-R-ALL	EWS-MPP-001A,B,C,D (ESW PUMP) FAIL TO RE-START (CCF)
2	6.0E-09	6.7	!19LOOP	LOSS OF OFFSITE POWER
			ACWOO02CT-DP2	(HE) FAIL TO ESTABLISH THE ALTERNATE CCWS BY NON-ESSENTIAL CHILLED WATER SYSTEM COOLING TOWER
			ACWOO02FS	(HE) FAIL TO ESTABLISH THE ALTERNATE CCWS BY FIRE PROTECTION WATER SUPPLY SYSTEM
			CWSCF4PCBD001-R-ALL	NCS-MPP-001A,B,C,D (CCW PUMP) FAIL TO RE-START (CCF)
			RCP----SEAL	RCP SEAL LOCA
3	2.5E-09	2.8	!19LOOP	LOSS OF OFFSITE POWER
			EPSCF4DLLRGTG-234	CLASS-1E GTG A,C,D FAIL TO RUN AFTER FIRST HOUR OF OPERATION (CCF)
			EPSOO02RDG	(HE) FAIL TO CONNECT THE ALTERNATE AC POWER SOURCE TO CLASS 1E BUS
			RCP----SEAL	RCP SEAL LOCA
			SWSTMPE001B	EWS-MPP-001B (B-ESW PUMP) TEST & MAINTENANCE
4	2.5E-09	2.8	!19LOOP	LOSS OF OFFSITE POWER
			EPSCBFO52RAT-ACD	EPS 52/RATA,C,D (BREAKER) FAIL TO OPEN (CCF)
			RCP----SEAL	RCP SEAL LOCA
			SWSTMPE001B	EWS-MPP-001B (B-ESW PUMP) TEST & MAINTENANCE

Table 19.1-29 LOOP with Reactor Trip Resulting LOCCW Sequence Dominant Cutsets (Sheet 2 of 5)

Rank	Cutsets Freq. (/RY)	Percent (%)	Cutsets	Basic Event Name
5	2.5E-09	2.8	!19LOOP	LOSS OF OFFSITE POWER
			EPSCBFO52UAT-ACD	EPS 52/UATA,C,D (BREAKER) FAIL TO OPEN (CCF)
			RCP----SEAL	RCP SEAL LOCA
			SWSTMPE001B	EWS-MPP-001B (B-ESW PUMP) TEST & MAINTENANCE
6	1.5E-09	1.6	!19LOOP	LOSS OF OFFSITE POWER
			CWSTMRC001B	NCS-MHX-001B (B-CCW HX) TEST & MAINTENANCE
			EPSCF4DLLRGTG-234	CLASS-1E GTG A,C,D FAIL TO RUN AFTER FIRST HOUR OF OPERATION
			EPSOO02RDG	(HE) FAIL TO CONNECT THE ALTERNATE AC POWER SOURCE TO
			RCP----SEAL	RCP SEAL LOCA
7	1.5E-09	1.6	!19LOOP	LOSS OF OFFSITE POWER
			CWSTMRC001B	NCS-MHX-001B (B-CCW HX) TEST & MAINTENANCE
			EPSCBFO52RAT-ACD	EPS 52/RATA,C,D (BREAKER) FAIL TO OPEN (CCF)
			RCP----SEAL	RCP SEAL LOCA
8	1.5E-09	1.6	!19LOOP	LOSS OF OFFSITE POWER
			CWSTMRC001B	NCS-MHX-001B (B-CCW HX) TEST & MAINTENANCE
			EPSCBFO52UAT-ACD	EPS 52/UATA,C,D (BREAKER) FAIL TO OPEN (CCF)
			RCP----SEAL	RCP SEAL LOCA
9	1.3E-09	1.4	!19LOOP	LOSS OF OFFSITE POWER
			CWSTMPC001B	NCS-MPP-001B (B-CCW PUMP) TEST & MAINTENANCE
			EPSCF4DLLRGTG-234	CLASS-1E GTG A,C,D FAIL TO RUN AFTER FIRST HOUR OF OPERATION (CCF)
			EPSOO02RDG	(HE) FAIL TO CONNECT THE ALTERNATE AC POWER SOURCE TO CLASS 1E BUS
			RCP----SEAL	RCP SEAL LOCA

Table 19.1-29 LOOP with Reactor Trip Resulting LOCCW Sequence Dominant Cutsets (Sheet 3 of 5)

Rank	Cutsets Freq. (/RY)	Percent (%)	Cutsets	Basic Event Name
10	1.2E-09	1.4	!19LOOP	LOSS OF OFFSITE POWER
			CWSTMPC001B	NCS-MPP-001B (B-CCW PUMP) TEST & MAINTENANCE
			EPSCBFO52UAT-ACD	EPS 52/UATA,C,D (BREAKER) FAIL TO OPEN (CCF)
			RCP----SEAL	RCP SEAL LOCA
11	1.2E-09	1.4	!19LOOP	LOSS OF OFFSITE POWER
			CWSTMPC001B	NCS-MPP-001B (B-CCW PUMP) TEST & MAINTENANCE
			EPSCBFO52RAT-ACD	EPS 52/RATA,C,D (BREAKER) FAIL TO OPEN (CCF)
			RCP----SEAL	RCP SEAL LOCA
12	5.3E-10	0.59	!19LOOP	LOSS OF OFFSITE POWER
			EPSCF4DLADGTG-134	CLASS-1E GTG A,C,D FAIL TO START (CCF)
			EPSOO02RDG	(HE) FAIL TO CONNECT THE ALTERNATE AC POWER SOURCE TO CLASS 1E BUS
			RCP----SEAL	RCP SEAL LOCA
			SWSTMPE001B	EWS-MPP-001B (B-ESW PUMP) TEST & MAINTENANCE
13	3.9E-10	0.44	!19LOOP	LOSS OF OFFSITE POWER
			EPSCF4DLSRGTG-234	CLASS-1E GTG A,C,D FAIL TO RUN DURING FIRST HOUR OF OPERATION (CCF)
			EPSOO02RDG	(HE) FAIL TO CONNECT THE ALTERNATE AC POWER SOURCE TO CLASS 1E BUS
			RCP----SEAL	RCP SEAL LOCA
			SWSTMPE001B	EWS-MPP-001B (B-ESW PUMP) TEST & MAINTENANCE
14	3.9E-10	0.44	!19LOOP	LOSS OF OFFSITE POWER
			CHICF2PMBD001-ALL	CVS-MPP-001A,B (CHI PUMP) FAIL TO START (CCF)
			RCP----SEAL	RCP SEAL LOCA
			SWSCF4PMBD001-R-ALL	EWS-MPP-001A,B,C,D (ESW PUMP) FAIL TO RE-START (CCF)

Table 19.1-29 LOOP with Reactor Trip Resulting LOCCW Sequence Dominant Cutsets (Sheet 4 of 5)

Rank	Cutsets Freq. (/RY)	Percent (%)	Cutsets	Basic Event Name
15	3.8E-10	0.42	!19LOOP	LOSS OF OFFSITE POWER
			ACWOO02FS	(HE) FAIL TO ESTABLISH THE ALTERNATE CCWS BY FIRE PROTECTION WATER SUPPLY SYSTEM
			EPSDLLRAACA-L2	A-AAC FAIL TO LOAD AND RUN AFTER FIRST HOUR OF OPERATION
			RCP----SEAL	RCP SEAL LOCA
			SWSCF4PMBD001-R-ALL	EWS-MPP-001A,B,C,D (ESW PUMP) FAIL TO RE-START (CCF)
16	3.5E-10	0.39	!19LOOP	LOSS OF OFFSITE POWER
			EPSCF4DLLRGTG-234	CLASS-1E GTG A,C,D FAIL TO RUN AFTER FIRST HOUR OF OPERATION (CCF)
			EPSOO02RDG	(HE) FAIL TO CONNECT THE ALTERNATE AC POWER SOURCE TO CLASS 1E BUS
			RCP----SEAL	RCP SEAL LOCA
			SWSPMBD001B-R	EWS-MPP-001B (B-ESW PUMP) FAIL TO RE-START
17	3.5E-10	0.39	!19LOOP	LOSS OF OFFSITE POWER
			EPSCF4DLLRGTG-134	CLASS-1E GTG A,B,D FAIL TO RUN AFTER FIRST HOUR OF OPERATION (CCF)
			EPSOO02RDG	(HE) FAIL TO CONNECT THE ALTERNATE AC POWER SOURCE TO CLASS 1E BUS
			RCP----SEAL	RCP SEAL LOCA
			SWSPMBD001C-R	EWS-MPP-001C (C-ESW PUMP) FAIL TO RE-START
18	3.5E-10	0.39	!19LOOP	LOSS OF OFFSITE POWER
			EPSCBFO52UAT-ACD	EPS 52/UATA,C,D (BREAKER) FAIL TO OPEN (CCF)
			RCP----SEAL	RCP SEAL LOCA
			SWSPMBD001B-R	EWS-MPP-001B (B-ESW PUMP) FAIL TO RE-START

Table 19.1-29 LOOP with Reactor Trip Resulting LOCCW Sequence Dominant Cutsets (Sheet 5 of 5)

Rank	Cutsets Freq. (/RY)	Percent (%)	Cutsets	Basic Event Name
19	3.5E-10	0.39	!19LOOP	LOSS OF OFFSITE POWER
			EPSCBFO52RAT-ACD	EPS 52/RATA,C,D (BREAKER) FAIL TO OPEN (CCF)
			RCP----SEAL	RCP SEAL LOCA
			SWSPMBD001B-R	EWS-MPP-001B (B-ESW PUMP) FAIL TO RE-START
20	3.5E-10	0.39	!19LOOP	LOSS OF OFFSITE POWER
			EPSCBFO52UAT-ABD	EPS 52/UATA,B,D (BREAKER) FAIL TO OPEN (CCF)
			RCP----SEAL	RCP SEAL LOCA
			SWSPMBD001C-R	EWS-MPP-001C (C-ESW PUMP) FAIL TO RE-START

Table 19.1-30 Basic Events (Hardware Failure, Human Error) FV Importance (Sheet 1 of 3)

Rank	Basic Event ID	Basic Event Description	Basic Event Probability	FV Importance	RAW
1	OPS----PRBF	POWER RECOVERY (1H)	5.3E-01	3.4E-01	1.3E+00
2	OPS----PRCF	POWER RECOVERY (3H)	4.1E-01	3.3E-01	1.5E+00
3	EPSOO02RDG	(HE) FAIL TO CONNECT THE ALTERNATE AC POWER SOURCE TO CLASS 1E BUS	2.1E-02	2.9E-01	1.5E+01
4	EPSCF4DLLRGTG-ALL	CLASS-1E GTG A,B,C,D FAIL TO RUN AFTER FIRST HOUR OF OPERATION (CCF)	9.9E-04	2.2E-01	2.2E+02
5	ACWOO02FS	(HE) FAIL TO ESTABLISH THE ALTERNATE CCWS BY FIRE PROTECTION WATER SUPPLY SYSTEM	1.1E-02	1.8E-01	1.7E+01
6	ACWOO02CT-DP2	(HE) FAIL TO ESTABLISH THE ALTERNATE CCWS BY NON-ESSENTIAL CHILLED WATER SYSTEM COOLING TOWER	5.1E-01	1.7E-01	1.2E+00
7	EFWOO01006AB	(HE) FAIL TO CHANGEOVER EFW PIT	1.7E-02	5.2E-02	4.0E+00
8	EPSCF4DLADGTG-ALL	CLASS-1E GTG A,B,C,D FAIL TO START (CCF)	2.1E-04	4.6E-02	2.2E+02
9	HPIOO02FWBD	(HE) FAIL TO OPEN SAFETY DEPRESSURIZATION VALVE AND START SAFETY INJECTION PUMP	3.8E-03	4.2E-02	1.2E+01
10	RWSCF4SUPR001-ALL	SIS-SST-001A,B,C,D (ESS/CS STRAINER) PLUG DURING OPERATION (CCF)	9.7E-06	3.9E-02	4.0E+03
11	SGNBTSWCCF2	GROUP-2 APPLICATION SOFTWARE CCF	1.0E-05	3.7E-02	3.7E+03
12	EPSCF4DLSRGTG-ALL	CLASS-1E GTG A,B,C,D FAIL TO RUN DURING FIRST HOUR OF OPERATION (CCF)	1.6E-04	3.4E-02	2.2E+02
13	RTPDASF	DAS FAILURE	1.0E-02	3.0E-02	4.0E+00
14	SGNBTHWCCF	DIGITAL I&C HARDWARE CCF	2.1E-06	2.9E-02	1.4E+04
15	EFWPTAD001A	EFS-MPP-001A (A-EFW PUMP) FAIL TO START	6.5E-03	2.2E-02	4.4E+00
16	EPSCF2DLLRAAC-ALL	AAC A,B FAIL TO RUN AFTER FIRST HOUR OF OPERATION (CCF)	1.5E-03	2.1E-02	1.5E+01
17	HPIOO02FWBD-S	(HE) FAIL TO OPEN SAFETY DEPRESSURIZATION VALVE	2.6E-03	2.1E-02	9.0E+00

Table 19.1-30 Basic Events (Hardware Failure, Human Error) FV Importance (Sheet 2 of 3)

Rank	Basic Event ID	Basic Event Description	Basic Event Probability	FV Importance	RAW
18	SWSTMPE001B	EWS-MPP-001B (B-ESW PUMP) TEST & MAINTENANCE	1.2E-02	1.9E-02	2.6E+00
19	RTPCRDF	ROD INJECTION FAILURE (4< RODS)	1.0E-07	1.9E-02	1.7E+05
20	EPSDLLRAACA-L2	A-AAC FAIL TO LOAD AND RUN AFTER FIRST HOUR OF OPERATION	1.8E-02	1.6E-02	1.9E+00
21	SWSCF4PMBD001-R-ALL	EWS-MPP-001A,B,C,D (ESW PUMP) FAIL TO RE-START (CCF)	4.8E-05	1.6E-02	3.3E+02
22	OPSLOOP	CONSEQUENTIAL LOOP GIVEN A REACTOR TRIP	5.3E-03	1.6E-02	4.0E+00
23	EFWCF2PTAD001AD-ALL	EFS-MPP-001A,D (EFW PUMP) FAIL TO START (CCF)	4.5E-04	1.5E-02	3.5E+01
24	SGNOO01S	(HE) FAIL TO START SAFETY INJECTION PUMP BY DAS	5.7E-02	1.5E-02	1.3E+00
25	EFWTMTA001A	EFS-MPP-001A (A-EFW PUMP) TEST & MAINTENANCE	5.0E-03	1.5E-02	4.0E+00
26	EFWPTAD001D	EFS-MPP-001D (D-EFW PUMP) FAIL TO START	6.5E-03	1.3E-02	2.9E+00
27	EPSDLLRAACB-L2	B-AAC FAIL TO LOAD AND RUN AFTER FIRST HOUR OF OPERATION	1.8E-02	1.3E-02	1.7E+00
28	MFWHARD	MFW SYSTEM FAILURE	1.0E-01	1.1E-02	1.1E+00
29	EPSCF4DLLRGTG-234	CLASS-1E GTG A,C,D FAIL TO RUN AFTER FIRST HOUR OF OPERATION (CCF)	2.5E-04	1.0E-02	4.2E+01
30	RSSCF4MVOD145-ALL	NCS-MOV-145A,B,C,D FAIL TO OPEN (CCF)	8.4E-05	9.9E-03	1.2E+02
31	NCCOO02CCW	(HE) FAIL TO OPERATE ALTERNATE C/V COOLING BY C/V FAN	2.0E-02	9.5E-03	1.5E+00
32	EPSTMDGAACA	A-AAC TEST & MAINTENANCE	1.2E-02	9.2E-03	1.8E+00
33	HPICF4PMAD001-ALL	SIS-MPP-001A,B,C,D (SI PUMP) FAIL TO START (CCF)	1.1E-04	9.0E-03	8.1E+01
34	HPIOO01SDVDAS	(HE) FAIL TO OPEN SAFETY DEPRESSURIZATION VALVE BY DAS	5.7E-02	8.9E-03	1.1E+00
35	CWSCF4PCBD001-R-ALL	NCS-MPP-001A,B,C,D (CCW PUMP) FAIL TO RE-START (CCF)	2.6E-05	8.8E-03	3.3E+02
36	EPSCBFO52RAT-ACD	EPS 52/RATA,C,D (BREAKER) FAIL TO OPEN (CCF)	5.2E-06	8.4E-03	1.6E+03
37	EPSCBFO52UAT-ACD	EPS 52/UATA,C,D (BREAKER) FAIL TO OPEN (CCF)	5.2E-06	8.4E-03	1.6E+03
38	EPSCF4SEFFGTG-ALL	CLASS-1E GTG A,B,C,D SEQUENCER FAIL TO OPERATE (CCF)	3.8E-05	8.2E-03	2.2E+02

Table 19.1-30 Basic Events (Hardware Failure, Human Error) FV Importance (Sheet 3 of 3)

Rank	Basic Event ID	Basic Event Description	Basic Event Probability	FV Importance	RAW
39	EFWPTSR001A	EFS-MPP-001A (A-EFW PUMP) FAIL TO RUN DURING FIRST HOUR OF OPERATION	2.4E-03	8.1E-03	4.4E+00
40	EFWTMTA001D	EFS-MPP-001D (D-EFW PUMP) TEST & MAINTENANCE	5.0E-03	7.7E-03	2.5E+00
41	EPSDLLREGTGC	C-CLASS 1E GTG FAIL TO LOAD AND RUN AFTER FIRST HOUR OF OPERATION	1.7E-02	7.7E-03	1.5E+00
42	EPSTMDGAACB	B-AAC TEST & MAINTENANCE	1.2E-02	6.7E-03	1.5E+00
43	CWSTMRC001B	NCS-MHX-001B (B-CCW HX) TEST & MAINTENANCE	7.0E-03	6.5E-03	1.9E+00
44	VCWCHBD001B	VWS-MEQ-001B (B-ESSENTIAL CHILLER UNIT) FAIL TO START	1.0E-02	6.4E-03	1.6E+00
45	CHICF2PMBD001-ALL	CVS-MPP-001A,B (CHI PUMP) FAIL TO START (CCF)	2.0E-04	6.2E-03	3.2E+01
46	RTPMTCF	UNFAVORABLE MODERATOR TEMPERATURE	5.0E-02	6.0E-03	1.1E+00
47	MSROO02515A	(HE) FAIL TO CLOSE MSS-SMV-515A	2.6E-03	6.0E-03	3.3E+00
48	OPS----PRBS	POWER RECOVERY SUCCESS (1H)	4.7E-01	5.7E-03	1.0E+00
49	HPIOO02FWBD-DP2	(HE) FAIL TO OPEN SAFETY DEPRESSURIZATION VALVE AND START SAFETY INJECTION PUMP	5.4E-02	5.6E-03	1.1E+00
50	MFWOO02R	(HE) FAIL TO RECOVER MFWS	3.8E-03	5.6E-03	2.5E+00
51	CWSTMPC001B	NCS-MPP-001B (B-CCW PUMP) TEST & MAINTENANCE	6.0E-03	5.6E-03	1.9E+00
52	EPSOO01UATRAT	(HE) FAIL TO SEPARATE 52/UATA,D,52/RATA,D (BREAKER) AT LOCAL	1.6E-02	5.5E-03	1.3E+00
53	EPSDLLREGTGB	B-CLASS 1E GTG FAIL TO LOAD AND RUN AFTER FIRST HOUR OF OPERATION	1.7E-02	5.4E-03	1.3E+00
54	EFWPTLR001A	EFS-MPP-001A (A-EFW PUMP) FAIL TO RUN AFTER FIRST HOUR OF OPERATION	1.5E-03	5.2E-03	4.4E+00
55	VCWTMPZ001B	VWS-MPP-001B (B-ESSENTIAL CHILLED WATER PUMP) TEST & MAINTENANCE	8.0E-03	5.1E-03	1.6E+00

Table 19.1-31 Basic Events (Hardware Failure, Human Error) RAW (Sheet 1 of 45)

Rank	Basic Event ID	Basic Event Description	Basic Event Probability	RAW	FV Importance
1	RTPCRDF	ROD INJECTION FAILURE (4< RODS)	1.0E-07	1.7E+05	1.9E-02
2	RTPBTSWCCF	BASIC SOFTWARE CCF	1.0E-07	4.6E+04	4.7E-03
3	SGNBTHWCCF	DIGITAL I&C HARDWARE CCF	2.1E-06	1.4E+04	2.9E-02
4	EPSCF4CBSC52RAT-ALL	EPS 52/RATA,B,C,D (BREAKER) SPURIOUS CLOSE (CCF)	1.6E-07	8.5E+03	1.3E-03
5	EPSCF4CBSC52UAT-ALL	EPS 52/UATA,B,C,D (BREAKER) SPURIOUS CLOSE (CCF)	1.6E-07	8.5E+03	1.3E-03
6	SWSCF4PMYR-FF	EWS-MPP-001A,B,C,D (A,B,C,D-ESW PUMP) FAIL TO RUN (CCF)	1.2E-08	6.2E+03	7.5E-05
7	EPSCF4CBSO52STH-ALL	EPS 52/STHA,B,C,D (BREAKER) SPURIOUS OPEN (CCF)	1.6E-07	6.1E+03	9.6E-04
8	EPSCF4CBSO52STL-ALL	EPS 52/STLA,B,C,D (BREAKER) SPURIOUS OPEN (CCF)	1.6E-07	6.1E+03	9.6E-04
9	CWSCF4RHPR-FF	NCS-MHX-001A,B,C,D (A,B,C,D-CCW HX) PLUG / FOUL (CCF)	3.6E-08	5.8E+03	2.1E-04
10	CWSCF4PCYR-FF	NCS-MPP-001A,B,C,D (A,B,C,D-CCW PUMP) FAIL TO RUN (CCF)	6.7E-09	5.8E+03	3.9E-05
11	EPSCF4CBSO52LC-ALL	EPS 52/LCA,B,C,D (BREAKER) SPURIOUS OPEN (CCF)	1.6E-07	4.6E+03	7.3E-04
12	RWSCF4SUPR001-ALL	SIS-SST-001A,B,C,D (ESS/CS STRAINER) PLUG DURING OPERATION (CCF)	9.7E-06	4.0E+03	3.9E-02
13	RWSXVEL024	RWS-VLV-024 EXTERNAL LEAK LARGE	7.2E-08	4.0E+03	2.9E-04
14	RWSXVEL001	RWS-VLV-001 EXTERNAL LEAK LARGE	7.2E-08	4.0E+03	2.9E-04
15	RWSCVEL023	RWS-VLV-023 EXTERNAL LEAK LARGE	4.8E-08	4.0E+03	1.9E-04
16	RWSMVEL002	RWS-MOV-002 EXTERNAL LEAK LARGE	2.4E-08	4.0E+03	9.7E-05
17	RWSPNELPIPE1	RWS PIPING BETWEEN RWSP AND RWS-VLV-023 EXTERNAL LEAK LARGE	6.0E-10	4.0E+03	2.4E-06
18	RWSPNELPIPE2	RWS PIPING BETWEEN RWSP AND RWS-VLV-002 EXTERNAL LEAK LARGE	6.0E-10	4.0E+03	2.4E-06
19	RWSTNEL001	RWS-MCP-001 (RWSP) EXTERNAL LEAK LARGE	4.8E-08	4.0E+03	1.9E-04
20	HPIMVEL001B	SIS-MOV-001B EXTERNAL LEAK LARGE	2.4E-08	4.0E+03	9.7E-05

Table 19.1-31 Basic Events (Hardware Failure, Human Error) RAW (Sheet 2 of 45)

Rank	Basic Event ID	Basic Event Description	Basic Event Probability	RAW	FV Importance
21	HPIMVEL001C	SIS-MOV-001C EXTERNAL LEAK LARGE	2.4E-08	4.0E+03	9.7E-05
22	HPIMVEL001D	SIS-MOV-001D EXTERNAL LEAK LARGE	2.4E-08	4.0E+03	9.7E-05
23	HPIMVEL001A	SIS-MOV-001A EXTERNAL LEAK LARGE	2.4E-08	4.0E+03	9.7E-05
24	RSSMVELCSS001B	CSS-MOV-001B EXTERNAL LEAK LARGE	2.4E-08	4.0E+03	9.7E-05
25	RSSMVELCSS001A	CSS-MOV-001A EXTERNAL LEAK LARGE	2.4E-08	4.0E+03	9.7E-05
26	RSSMVELCSS001C	CSS-MOV-001C EXTERNAL LEAK LARGE	2.4E-08	4.0E+03	9.7E-05
27	RSSMVELCSS001D	CSS-MOV-001D EXTERNAL LEAK LARGE	2.4E-08	4.0E+03	9.7E-05
28	EPSCF4CBSO52STL-234	EPS 52/STLB,C,D (BREAKER) SPURIOUS OPEN (CCF)	2.9E-08	4.0E+03	1.2E-04
29	EPSCF4CBSO52STH-234	EPS 52/STHB,C,D (BREAKER) SPURIOUS OPEN (CCF)	2.9E-08	4.0E+03	1.2E-04
30	EPSCF4CBSO52LC-123	EPS 52/LCB,C,D (BREAKER) SPURIOUS OPEN (CCF)	2.9E-08	4.0E+03	1.2E-04
31	RSSPNEL01D	CSS PIPING BETWEEN RWSP AND CSS-MOV-001D EXTERNAL LEAK LARGE	6.0E-10	4.0E+03	2.4E-06
32	HPIPNELSUCTSB	SIS PIPING B BETWEEN RWSP AND SIS-MOV-001B EXTERNAL LEAK LARGE	6.0E-10	4.0E+03	2.4E-06
33	HPIPNELSUCTSC	SIS PIPING C BETWEEN RWSP AND SIS-MOV-001C EXTERNAL LEAK LARGE	6.0E-10	4.0E+03	2.4E-06
34	RSSPNEL01C	CSS PIPING BETWEEN RWSP AND CSS-MOV-001C EXTERNAL LEAK LARGE	6.0E-10	4.0E+03	2.4E-06
35	HPIPNELSUCTSA	SIS PIPING A BETWEEN RWSP AND SIS-MOV-001A EXTERNAL LEAK LARGE	6.0E-10	4.0E+03	2.4E-06
36	RSSPNEL01B	CSS PIPING BETWEEN RWSP AND CSS-MOV-001B EXTERNAL LEAK LARGE	6.0E-10	4.0E+03	2.4E-06
37	RSSPNEL01A	CSS PIPING BETWEEN RWSP AND CSS-MOV-001A EXTERNAL LEAK LARGE	6.0E-10	4.0E+03	2.4E-06
38	HPIPNELSUCTSD	SIS PIPING D BETWEEN RWSP AND SIS-MOV-001D EXTERNAL LEAK LARGE	6.0E-10	4.0E+03	2.4E-06

Table 19.1-31 Basic Events (Hardware Failure, Human Error) RAW (Sheet 3 of 45)

Rank	Basic Event ID	Basic Event Description	Basic Event Probability	RAW	FV Importance
39	SGNBTSWCCF2	GROUP-2 APPLICATION SOFTWARE CCF	1.0E-05	3.7E+03	3.7E-02
40	RTPCF4AXFFRT-ALL	REACTOR TRIP BREAKER A1,A2,B1,B2,C1,C2,D1,D2 (CCF)	2.4E-06	1.9E+03	4.6E-03
41	EPSCBFO52RAT-ACD	EPS 52/RATA,C,D (BREAKER) FAIL TO OPEN (CCF)	5.2E-06	1.6E+03	8.4E-03
42	EPSCBFO52UAT-ACD	EPS 52/UATA,C,D (BREAKER) FAIL TO OPEN (CCF)	5.2E-06	1.6E+03	8.4E-03
43	EPSCF4CBSC52RAT-134	EPS 52/RATA,C,D (BREAKER) SPURIOUS CLOSE (CCF)	2.9E-08	1.6E+03	4.7E-05
44	EPSCF4CBSC52UAT-134	EPS 52/UATA,C,D (BREAKER) SPURIOUS CLOSE (CCF)	2.9E-08	1.6E+03	4.7E-05
45	RTPCF4ICYRRT7001-ALL	SG WATER LEVEL SENSOR (NARROW RANGE) CCF	1.4E-06	1.5E+03	2.1E-03
46	EFWCF2CVOD008-ALL	EFS-VLV-008A,B FAIL TO OPEN (CCF)	2.4E-06	1.5E+03	3.6E-03
47	EFWCF4CVOD018-ALL	EFS-VLV-018A,B,C,D FAIL TO OPEN (CCF)	1.7E-06	1.5E+03	2.5E-03
48	EFWCF4CVOD012-ALL	EFS-VLV-012A,B,C,D FAIL TO OPEN (CCF)	1.7E-06	1.5E+03	2.5E-03
49	EFWCF4MVFC017-ALL	EFS-MOV-017A,B,C,D FAIL TO CONTROL (CCF)	8.5E-07	1.5E+03	1.3E-03
50	EFWCF4MVFC017-234	EFS-MOV-017A,B,C FAIL TO CONTROL (CCF)	2.8E-07	1.5E+03	4.2E-04
51	EFWCF4MVFC017-124	EFS-MOV-017A,C,D FAIL TO CONTROL (CCF)	2.8E-07	1.5E+03	4.2E-04
52	EFWCF4MVFC017-123	EFS-MOV-017A,B,D FAIL TO CONTROL (CCF)	2.8E-07	1.5E+03	4.2E-04
53	EFWCF4MVFC017-134	EFS-MOV-017B,C,D FAIL TO CONTROL (CCF)	2.8E-07	1.5E+03	4.2E-04
54	EFWXVEL006A	EFS-VLV-006A EXTERNAL LEAK LARGE	7.2E-08	1.5E+03	1.1E-04
55	EFWXVEL006B	EFS-VLV-006B EXTERNAL LEAK LARGE	7.2E-08	1.5E+03	1.1E-04
56	EFWCF4CVOD018-234	EFS-VLV-018A,C,D FAIL TO OPEN (CCF)	6.2E-08	1.5E+03	9.2E-05
57	EFWCF4CVOD018-124	EFS-VLV-018A,B,C FAIL TO OPEN (CCF)	6.2E-08	1.5E+03	9.2E-05
58	EFWCF4CVOD018-123	EFS-VLV-018B,C,D FAIL TO OPEN (CCF)	6.2E-08	1.5E+03	9.2E-05
59	EFWCF4CVOD018-134	EFS-VLV-018A,B,D FAIL TO OPEN (CCF)	6.2E-08	1.5E+03	9.2E-05
60	EPSCF4CBSO72DB-124	EPS 72/DBA,B,D (BREAKER) SPURIOUS OPEN (CCF)	2.9E-08	1.0E+03	2.9E-05
61	EPSCF4CBSO72DB-234	EPS 72/DBA,C,D (BREAKER) SPURIOUS OPEN (CCF)	2.9E-08	1.0E+03	2.9E-05
62	EPSCF4BYFFBAT-123	CLASS-1E BATTERY A, C, D FAIL TO OPERATE (CCF)	1.2E-08	1.0E+03	1.2E-05
63	EPSCF4BYFFBAT-134	CLASS-1E BATTERY A, B, D FAIL TO OPERATE (CCF)	1.2E-08	1.0E+03	1.2E-05
64	EPSCF4CBSO72DB-ALL	EPS 72/DBA,B,C,D (BREAKER) SPURIOUS OPEN (CCF)	1.6E-07	9.3E+02	1.5E-04

Table 19.1-31 Basic Events (Hardware Failure, Human Error) RAW (Sheet 4 of 45)

Rank	Basic Event ID	Basic Event Description	Basic Event Probability	RAW	FV Importance
65	EPSCF4BYFFBAT-ALL	CLASS-1E BATTERY A, B, C, D FAIL TO OPERATE (CCF)	5.0E-08	9.3E+02	4.7E-05
66	EPSCBFO52UAT-ABD	EPS 52/UATA,B,D (BREAKER) FAIL TO OPEN (CCF)	5.2E-06	6.2E+02	3.2E-03
67	EPSCBFO52RAT-ABD	EPS 52/RATA,B,D (BREAKER) FAIL TO OPEN (CCF)	5.2E-06	6.2E+02	3.2E-03
68	EPSCF4CBSC52RAT-124	EPS 52/RATA,B,D (BREAKER) SPURIOUS CLOSE (CCF)	2.9E-08	6.2E+02	1.8E-05
69	EPSCF4CBSC52UAT-124	EPS 52/UATA,B,D (BREAKER) SPURIOUS CLOSE (CCF)	2.9E-08	6.2E+02	1.8E-05
70	RWSCF4SUPR001-123	SIS-SST-001B,C,D (ESS/CS STRAINER) PLUG DURING OPERATION (CCF)	3.7E-06	6.1E+02	2.2E-03
71	ACCCF4CVOD102-ALL	SIS-VLV-102A,B,C,D FAIL TO OPEN (CCF)	1.0E-06	4.9E+02	4.9E-04
72	ACCCF4CVOD103-ALL	SIS-VLV-103A,B,C,D FAIL TO OPEN (CCF)	1.0E-06	4.9E+02	4.9E-04
73	ACCCF4CVOD103-124	SIS-VLV-103A,B,D FAIL TO OPEN (CCF)	2.7E-07	4.9E+02	1.3E-04
74	ACCCF4CVOD103-123	SIS-VLV-103A,B,C FAIL TO OPEN (CCF)	2.7E-07	4.9E+02	1.3E-04
75	ACCCF4CVOD103-134	SIS-VLV-103A,C,D FAIL TO OPEN (CCF)	2.7E-07	4.9E+02	1.3E-04
76	ACCCF4CVOD102-123	SIS-VLV-102A,B,C FAIL TO OPEN (CCF)	2.7E-07	4.9E+02	1.3E-04
77	ACCCF4CVOD103-234	SIS-VLV-103B,C,D FAIL TO OPEN (CCF)	2.7E-07	4.9E+02	1.3E-04
78	ACCCF4CVOD102-134	SIS-VLV-102A,C,D FAIL TO OPEN (CCF)	2.7E-07	4.9E+02	1.3E-04
79	ACCCF4CVOD102-234	SIS-VLV-102B,C,D FAIL TO OPEN (CCF)	2.7E-07	4.9E+02	1.3E-04
80	ACCCF4CVOD102-124	SIS-VLV-102A,B,D FAIL TO OPEN (CCF)	2.7E-07	4.9E+02	1.3E-04
81	ACCCF4CVOD102-34	SIS-VLV-102C,D FAIL TO OPEN (CCF)	1.6E-07	4.9E+02	7.8E-05
82	ACCCF4CVOD102-23	SIS-VLV-102B,C FAIL TO OPEN (CCF)	1.6E-07	4.9E+02	7.8E-05
83	ACCCF4CVOD103-12	SIS-VLV-103A,B FAIL TO OPEN (CCF)	1.6E-07	4.9E+02	7.8E-05
84	ACCCF4CVOD103-24	SIS-VLV-103B,D FAIL TO OPEN (CCF)	1.6E-07	4.9E+02	7.8E-05
85	ACCCF4CVOD102-24	SIS-VLV-102B,D FAIL TO OPEN (CCF)	1.6E-07	4.9E+02	7.8E-05
86	ACCCF4CVOD103-14	SIS-VLV-103A,D FAIL TO OPEN (CCF)	1.6E-07	4.9E+02	7.8E-05
87	EPSCF4CBSO72DB-123	EPS 72/DBA,B,C (BREAKER) SPURIOUS OPEN (CCF)	2.9E-08	4.4E+02	1.3E-05
88	EPSCF4BYFFBAT-234	CLASS-1E BATTERY A, B, C FAIL TO OPERATE (CCF)	1.2E-08	4.4E+02	5.4E-06

Table 19.1-31 Basic Events (Hardware Failure, Human Error) RAW (Sheet 5 of 45)

Rank	Basic Event ID	Basic Event Description	Basic Event Probability	RAW	FV Importance
89	SWSCF4PMBD001-R-ALL	EWS-MPP-001A,B,C,D (ESW PUMP) FAIL TO RE-START (CCF)	4.8E-05	3.3E+02	1.6E-02
90	CWSCF4PCBD001-R-ALL	NCS-MPP-001A,B,C,D (CCW PUMP) FAIL TO RE-START (CCF)	2.6E-05	3.3E+02	8.8E-03
91	EPSCF4CBSO72DB-134	EPS 72/DBB,C,D (BREAKER) SPURIOUS OPEN (CCF)	2.9E-08	3.3E+02	9.7E-06
92	EPSCF4BYFFBAT-124	CLASS-1E BATTERY B, C, D FAIL TO OPERATE (CCF)	1.2E-08	3.3E+02	4.1E-06
93	CWSCF4CVOD016-R-ALL	NCS-VLV-016AB,C,D FAIL TO RE-OPEN (CCF)	1.5E-07	3.3E+02	4.9E-05
94	SWSCF4CVOD602-R-ALL	EWS-VLV-602A,B,C,D FAIL TO RE-OPEN (CCF)	1.5E-07	3.3E+02	4.9E-05
95	SWSCF4CVOD502-R-ALL	EWS-VLV-502A,B,C,D FAIL TO RE-OPEN (CCF)	1.5E-07	3.3E+02	4.9E-05
96	EPSCF4CBSO52STL-134	EPS 52/STLA,C,D (BREAKER) SPURIOUS OPEN (CCF)	2.9E-08	3.0E+02	8.7E-06
97	EPSCF4CBSO52STH-124	EPS 52/STHA,C,D (BREAKER) SPURIOUS OPEN (CCF)	2.9E-08	3.0E+02	8.7E-06
98	EPSCF4DLLRGTG-ALL	CLASS-1E GTG A,B,C,D FAIL TO RUN AFTER FIRST HOUR OF OPERATION (CCF)	9.9E-04	2.2E+02	2.2E-01
99	EPSCF4DLADGTG-ALL	CLASS-1E GTG A,B,C,D FAIL TO START (CCF)	2.1E-04	2.2E+02	4.6E-02
100	EPSCF4DLSRGTG-ALL	CLASS-1E GTG A,B,C,D FAIL TO RUN DURING FIRST HOUR OF OPERATION (CCF)	1.6E-04	2.2E+02	3.4E-02
101	EPSCF4SEFFGTG-ALL	CLASS-1E GTG A,B,C,D SEQUENCER FAIL TO OPERATE (CCF)	3.8E-05	2.2E+02	8.2E-03
102	EPSCF4CBFC52EPS-ALL	EPS 52/EPSA,B,C,D (BREAKER) FAIL TO CLOSE (CCF)	2.0E-05	2.2E+02	4.4E-03
103	EPSCF4CBSO52EPS-ALL	EPS 52/EPSA,B,C,D (BREAKER) SPURIOUS OPEN (CCF)	1.6E-07	2.2E+02	3.4E-05
104	EPSCF4IVFFIBC-ALL	CLASS-1E UPS UNIT A,B,C,D FAIL TO OPERATE (CCF)	1.5E-06	2.2E+02	3.3E-04
105	EPSCF4CBSO52UA-ALL	EPS 52/UAA,B,C,D (BREAKER) SPURIOUS OPEN (CCF)	1.6E-07	2.1E+02	3.4E-05
106	EPSCF4CBSO72AU-ALL	EPS 72/AUA,B,C,D (BREAKER) SPURIOUS OPEN (CCF)	1.6E-07	2.1E+02	3.4E-05
107	EPSCF4CBSO52LC-234	EPS 52/LCA,C,D (BREAKER) SPURIOUS OPEN (CCF)	2.9E-08	2.1E+02	6.0E-06
108	HPIPMEL001B	SIS-MPP-001B (B-SI PUMP) EXTERNAL LEAK LARGE	1.9E-07	1.6E+02	3.1E-05
109	RSSPMEL001B	RHS-MPP-001B (B-CS/RHR PUMP) EXTERNAL LEAK LARGE	1.9E-07	1.6E+02	3.1E-05

Table 19.1-31 Basic Events (Hardware Failure, Human Error) RAW (Sheet 6 of 45)

Rank	Basic Event ID	Basic Event Description	Basic Event Probability	RAW	FV Importance
110	HPIPMEL001C	SIS-MPP-001C (C-SI PUMP) EXTERNAL LEAK LARGE	1.9E-07	1.6E+02	3.1E-05
111	RSSRIEL001C	RHS-MHX-001C (C-CS/RHR HX) TUBE EXTERNAL LEAK LARGE	7.2E-07	1.6E+02	1.2E-04
112	RSSRIEL001A	RHS-MHX-001A (A-CS/RHR HX) TUBE EXTERNAL LEAK LARGE	7.2E-07	1.6E+02	1.2E-04
113	RSSRIEL001D	RHS-MHX-001D (D-CS/RHR HX) TUBE EXTERNAL LEAK LARGE	7.2E-07	1.6E+02	1.2E-04
114	RSSRIEL001B	RHS-MHX-001B (B-CS/RHR HX) TUBE EXTERNAL LEAK LARGE	7.2E-07	1.6E+02	1.2E-04
115	RSSPMEL001C	RHS-MPP-001C (C-CS/RHR PUMP) EXTERNAL LEAK LARGE	1.9E-07	1.6E+02	3.1E-05
116	RSSXVEL013A	RHS-VLV-013A EXTERNAL LEAK LARGE	7.2E-08	1.6E+02	1.2E-05
117	RSSXVEL013D	RHS-VLV-013D EXTERNAL LEAK LARGE	7.2E-08	1.6E+02	1.2E-05
118	RSSXVEL013C	RHS-VLV-013C EXTERNAL LEAK LARGE	7.2E-08	1.6E+02	1.2E-05
119	RSSXVEL013B	RHS-VLV-013B EXTERNAL LEAK LARGE	7.2E-08	1.6E+02	1.2E-05
120	RSSCVEL004D	RHS-VLV-004D EXTERNAL LEAK LARGE	4.8E-08	1.6E+02	7.8E-06
121	RSSCVEL004C	RHS-VLV-004C EXTERNAL LEAK LARGE	4.8E-08	1.6E+02	7.8E-06
122	RSSCVEL004A	RHS-VLV-004A EXTERNAL LEAK LARGE	4.8E-08	1.6E+02	7.8E-06
123	RSSCVEL004B	RHS-VLV-004B EXTERNAL LEAK LARGE	4.8E-08	1.6E+02	7.8E-06
124	CFACVEL012	CSS-VLV-012 EXTERNAL LEAK LARGE	4.8E-08	1.6E+02	7.8E-06
125	HPIPMEL001A	SIS-MPP-001A (A-SI PUMP) EXTERNAL LEAK LARGE	1.9E-07	1.6E+02	3.1E-05
126	RSSPMEL001A	RHS-MPP-001A (A-CS/RHR PUMP) EXTERNAL LEAK LARGE	1.9E-07	1.6E+02	3.1E-05
127	HPIPMEL001D	SIS-MPP-001D (D-SI PUMP) EXTERNAL LEAK LARGE	1.9E-07	1.6E+02	3.1E-05
128	RSSPMEL001D	RHS-MPP-001D (D-CS/RHR PUMP) EXTERNAL LEAK LARGE	1.9E-07	1.6E+02	3.1E-05
129	RSSXVEL034D	RHS-VLV-034D EXTERNAL LEAK LARGE	7.2E-08	1.6E+02	1.2E-05
130	RSSXVEL031D	RHS-VLV-031D EXTERNAL LEAK LARGE	7.2E-08	1.6E+02	1.2E-05
131	RSSXVEL031A	RHS-VLV-031A EXTERNAL LEAK LARGE	7.2E-08	1.6E+02	1.2E-05

Table 19.1-31 Basic Events (Hardware Failure, Human Error) RAW (Sheet 7 of 45)

Rank	Basic Event ID	Basic Event Description	Basic Event Probability	RAW	FV Importance
132	RSSXVEL034A	RHS-VLV-034A EXTERNAL LEAK LARGE	7.2E-08	1.6E+02	1.2E-05
133	RSSXVEL002B	CSS-VLV-002B EXTERNAL LEAK LARGE	7.2E-08	1.6E+02	1.2E-05
134	RSSXVEL002D	CSS-VLV-002D EXTERNAL LEAK LARGE	7.2E-08	1.6E+02	1.2E-05
135	RSSXVEL002A	CSS-VLV-002A EXTERNAL LEAK LARGE	7.2E-08	1.6E+02	1.2E-05
136	RSSXVEL002C	CSS-VLV-002C EXTERNAL LEAK LARGE	7.2E-08	1.6E+02	1.2E-05
137	RSSMVEL004A	CSS-MOV-004A EXTERNAL LEAK LARGE	2.4E-08	1.6E+02	3.9E-06
138	RSSMVEL004B	CSS-MOV-004B EXTERNAL LEAK LARGE	2.4E-08	1.6E+02	3.9E-06
139	RSSMVEL004D	CSS-MOV-004D EXTERNAL LEAK LARGE	2.4E-08	1.6E+02	3.9E-06
140	RSSMVEL004C	CSS-MOV-004C EXTERNAL LEAK LARGE	2.4E-08	1.6E+02	3.9E-06
141	HPICVEL004B	SIS-VLV-004B EXTERNAL LEAK LARGE	4.8E-08	1.6E+02	7.7E-06
142	HPICVEL004C	SIS-VLV-004C EXTERNAL LEAK LARGE	4.8E-08	1.6E+02	7.7E-06
143	HPICVEL004D	SIS-VLV-004D EXTERNAL LEAK LARGE	4.8E-08	1.6E+02	7.7E-06
144	HPICVEL004A	SIS-VLV-004A EXTERNAL LEAK LARGE	4.8E-08	1.6E+02	7.7E-06
145	RWSMVEL004	RWS-MOV-004 EXTERNAL LEAK LARGE	2.4E-08	1.6E+02	3.9E-06
146	HPIMVEL009B	SIS-MOV-009B EXTERNAL LEAK LARGE	2.4E-08	1.6E+02	3.9E-06
147	HPIMVEL009D	SIS-MOV-009D EXTERNAL LEAK LARGE	2.4E-08	1.6E+02	3.9E-06
148	HPIMVEL009A	SIS-MOV-009A EXTERNAL LEAK LARGE	2.4E-08	1.6E+02	3.9E-06
149	HPIMVEL009C	SIS-MOV-009C EXTERNAL LEAK LARGE	2.4E-08	1.6E+02	3.9E-06
150	RWSPNELPIPE3	RWS PIPING BETWEEN RWS-VLV-002 AND RWS-VLV-004 EXTERNAL LEAK LARGE	6.0E-10	1.6E+02	9.6E-08
151	HPIPNELINJSD	SIS D-SI PUMP DISCHARGE LINE (OUTSIDE C/V) PIPING EXTERNAL LEAK LARGE	6.0E-10	1.6E+02	9.6E-08
152	HPIPNELINJSB	SIS B-SI PUMP DISCHARGE LINE (OUTSIDE C/V) PIPING EXTERNAL LEAK LARGE	6.0E-10	1.6E+02	9.6E-08
153	HPIPNELINJSA	SIS A-SI PUMP DISCHARGE LINE (OUTSIDE C/V) PIPING EXTERNAL LEAK LARGE	6.0E-10	1.6E+02	9.6E-08

Table 19.1-31 Basic Events (Hardware Failure, Human Error) RAW (Sheet 8 of 45)

Rank	Basic Event ID	Basic Event Description	Basic Event Probability	RAW	FV Importance
154	HPIPNELINJSC	SIS C-SI PUMP DISCHARGE LINE (OUTSIDE C/V) PIPING EXTERNAL LEAK LARGE	6.0E-10	1.6E+02	9.6E-08
155	RSSMVEL021B	RHS-MOV-021B EXTERNAL LEAK LARGE	2.4E-08	1.6E+02	3.9E-06
156	RSSMVEL021C	RHS-MOV-021C EXTERNAL LEAK LARGE	2.4E-08	1.6E+02	3.9E-06
157	RSSMVEL021A	RHS-MOV-021A EXTERNAL LEAK LARGE	2.4E-08	1.6E+02	3.9E-06
158	RSSMVEL021D	RHS-MOV-021D EXTERNAL LEAK LARGE	2.4E-08	1.6E+02	3.9E-06
159	RSSAVEL033	RHS-HCV-033 EXTERNAL LEAK LARGE	2.2E-08	1.6E+02	3.5E-06
160	RSSAVEL021	RHS-FCV-021 EXTERNAL LEAK LARGE	2.2E-08	1.6E+02	3.5E-06
161	RSSAVEL031	RHS-FCV-031 EXTERNAL LEAK LARGE	2.2E-08	1.6E+02	3.5E-06
162	RSSAVEL023	RHS-HCV-023 EXTERNAL LEAK LARGE	2.2E-08	1.6E+02	3.5E-06
163	RWSPMEL001A	RWS-MPP-001A (A-RWR PUMP) EXTERNAL LEAK LARGE	1.9E-07	1.6E+02	3.0E-05
164	RWSPMEL001B	RWS-MPP-001B (B-RWR PUMP) EXTERNAL LEAK LARGE	1.9E-07	1.6E+02	3.0E-05
165	RWSXVEL014	RWS-VLV-014 EXTERNAL LEAK LARGE	7.2E-08	1.6E+02	1.1E-05
166	RWSXVEL006A	RWS-VLV-006A EXTERNAL LEAK LARGE	7.2E-08	1.6E+02	1.1E-05
167	RWSXVEL066B	NCS-VLV-066B EXTERNAL LEAK LARGE	7.2E-08	1.6E+02	1.1E-05
168	RWSXVEL103A	SFS-VLV-103A EXTERNAL LEAK LARGE	7.2E-08	1.6E+02	1.1E-05
169	RWSXVEL101	RWS-VLV-101 EXTERNAL LEAK LARGE	7.2E-08	1.6E+02	1.1E-05
170	RWSXVEL066A	NCS-VLV-066A EXTERNAL LEAK LARGE	7.2E-08	1.6E+02	1.1E-05
171	RWSXVEL013A	RWS-VLV-013A EXTERNAL LEAK LARGE	7.2E-08	1.6E+02	1.1E-05
172	RWSXVEL028	SFS-VLV-028 EXTERNAL LEAK LARGE	7.2E-08	1.6E+02	1.1E-05
173	RWSXVEL006B	RWS-VLV-006B EXTERNAL LEAK LARGE	7.2E-08	1.6E+02	1.1E-05
174	RWSXVEL021	RWS-VLV-021 EXTERNAL LEAK LARGE	7.2E-08	1.6E+02	1.1E-05
175	RWSXVEL103B	SFS-VLV-103B EXTERNAL LEAK LARGE	7.2E-08	1.6E+02	1.1E-05
176	RWSXVEL005	RWS-VLV-005 EXTERNAL LEAK LARGE	7.2E-08	1.6E+02	1.1E-05
177	RWSXVEL013B	RWS-VLV-013B EXTERNAL LEAK LARGE	7.2E-08	1.6E+02	1.1E-05
178	RWSCVEL065A	NCS-VLV-065A EXTERNAL LEAK LARGE	4.8E-08	1.6E+02	7.6E-06

Table 19.1-31 Basic Events (Hardware Failure, Human Error) RAW (Sheet 9 of 45)

Rank	Basic Event ID	Basic Event Description	Basic Event Probability	RAW	FV Importance
179	RWSCVEL027	SFS-VLV-027 EXTERNAL LEAK LARGE	4.8E-08	1.6E+02	7.6E-06
180	RWSCVEL037	LMS-VLV-037 EXTERNAL LEAK LARGE	4.8E-08	1.6E+02	7.6E-06
181	RWSCVEL065B	NCS-VLV-065B EXTERNAL LEAK LARGE	4.8E-08	1.6E+02	7.6E-06
182	RWSCVEL012A	RWS-VLV-012A EXTERNAL LEAK LARGE	4.8E-08	1.6E+02	7.6E-06
183	RWSCVEL012B	RWS-VLV-012B EXTERNAL LEAK LARGE	4.8E-08	1.6E+02	7.6E-06
184	RWSPNELPIPE4	RWS PIPING BETWEEN RWS-VLV-004 AND RWSAT EXTERNAL LEAK LARGE	6.0E-10	1.6E+02	9.5E-08
185	RWSCF4SUPR001-234	SIS-SST-001A,C,D (ESS/CS STRAINER) PLUG DURING OPERATION (CCF)	3.7E-06	1.5E+02	5.4E-04
186	EPSCF4IVFFIBC-124	CLASS-1E UPS UNIT A,C,D FAIL TO OPERATE (CCF)	5.0E-07	1.5E+02	7.2E-05
187	EPSCF4CBSO52STH-134	EPS 52/STHA,B,D (BREAKER) SPURIOUS OPEN (CCF)	2.9E-08	1.4E+02	4.1E-06
188	EPSCF4CBSO52STL-124	EPS 52/STLA,B,D (BREAKER) SPURIOUS OPEN (CCF)	2.9E-08	1.4E+02	4.1E-06
189	EPSCBFO52UAT-ALL	EPS 52/UATA,B,C,D (BREAKER) FAIL TO OPEN (CCF)	2.0E-05	1.4E+02	2.8E-03
190	EPSCBFO52RAT-ALL	EPS 52/RATA,B,C,D (BREAKER) FAIL TO OPEN (CCF)	2.0E-05	1.4E+02	2.8E-03
191	RSSPNEL07C	CSS C/V SPRAY LINE C (OUTSIDE C/V) PIPING EXTERNAL LEAK LARGE	6.0E-10	1.4E+02	8.3E-08
192	RSSPNEL11D	RHS PIPING BETWEEN RHS-VLV-031D AND ALTERNATE CORE COOLING LINE EXTERNAL LEAK LARGE	6.0E-10	1.4E+02	8.3E-08
193	RSSPNEL10D	CSS PIPING BETWEEN RHS-VLV-034D AND D-CS/RHR PUMP SUCTION LINE EXTERNAL LEAK LARGE	6.0E-10	1.4E+02	8.3E-08
194	RSSPNEL12C	RHS-FCV-031 LINE PIPING EXTERNAL LEAK LARGE	6.0E-10	1.4E+02	8.3E-08
195	RSSPNEL03D	CSS PIPING BETWEEN CSS-MOV-001D AND D-CS/RHR PUMP EXTERNAL LEAK LARGE	6.0E-10	1.4E+02	8.3E-08
196	RSSPNEL04C	RHS C-CS/RHR PUMP LINE PIPING EXTERNAL LEAK LARGE	6.0E-10	1.4E+02	8.3E-08
197	RSSPNEL07D	CSS C/V SPRAY LINE D (OUTSIDE C/V) PIPING EXTERNAL LEAK LARGE	6.0E-10	1.4E+02	8.3E-08

Table 19.1-31 Basic Events (Hardware Failure, Human Error) RAW (Sheet 10 of 45)

Rank	Basic Event ID	Basic Event Description	Basic Event Probability	RAW	FV Importance
198	RSSPNEL04D	RHS D-CS/RHR PUMP LINE PIPING EXTERNAL LEAK LARGE	6.0E-10	1.4E+02	8.3E-08
199	RSSPNEL05D	RHS RHR OPERATION SUCTION LINE D (OUTSIDE C/V) PIPING EXTERNAL LEAK LARGE	6.0E-10	1.4E+02	8.3E-08
200	RSSPNEL05C	RHS RHR OPERATION SUCTION LINE C (OUTSIDE C/V) PIPING EXTERNAL LEAK LARGE	6.0E-10	1.4E+02	8.3E-08
201	HPIPNELSUCTLB	SIS PIPING B BETWEEN SIS-MOV-001B AND B-SI PUMP EXTERNAL LEAK LARGE	6.0E-10	1.4E+02	8.3E-08
202	HPIPNELSUCTLD	SIS PIPING D BETWEEN SIS-MOV-001D AND D-SI PUMP EXTERNAL LEAK LARGE	6.0E-10	1.4E+02	8.3E-08
203	HPIPNELSUCTLC	SIS PIPING C BETWEEN SIS-MOV-001C AND C-SI PUMP EXTERNAL LEAK LARGE	6.0E-10	1.4E+02	8.3E-08
204	RSSPNEL05B	RHS RHR OPERATION SUCTION LINE B (OUTSIDE C/V) PIPING EXTERNAL LEAK LARGE	6.0E-10	1.4E+02	8.3E-08
205	RSSPNEL08B	RHS ALTERNATE CORE COOLING LINE B (OUTSIDE C/V) PIPING EXTERNAL LEAK LARGE	6.0E-10	1.4E+02	8.3E-08
206	RSSPNEL08A	RHS ALTERNATE CORE COOLING LINE A (OUTSIDE C/V) PIPING EXTERNAL LEAK LARGE	6.0E-10	1.4E+02	8.3E-08
207	RSSPNEL08C	RHS ALTERNATE CORE COOLING LINE C (OUTSIDE C/V) PIPING EXTERNAL LEAK LARGE	6.0E-10	1.4E+02	8.3E-08
208	RSSPNEL05A	RHS RHR OPERATION SUCTION LINE A (OUTSIDE C/V) PIPING EXTERNAL LEAK LARGE	6.0E-10	1.4E+02	8.3E-08
209	RSSPNEL08D	RHS ALTERNATE CORE COOLING LINE D (OUTSIDE C/V) PIPING EXTERNAL LEAK LARGE	6.0E-10	1.4E+02	8.3E-08
210	HPIPNELSUCTLA	SIS PIPING A BETWEEN SIS-MOV-001A AND A-SI PUMP EXTERNAL LEAK LARGE	6.0E-10	1.4E+02	8.3E-08

Table 19.1-31 Basic Events (Hardware Failure, Human Error) RAW (Sheet 11 of 45)

Rank	Basic Event ID	Basic Event Description	Basic Event Probability	RAW	FV Importance
211	RSSPNEL03B	CSS PIPING BETWEEN CSS-MOV-001B AND B-CS/RHR PUMP EXTERNAL LEAK LARGE	6.0E-10	1.4E+02	8.3E-08
212	RSSPNEL04B	RHS B-CS/RHR PUMP LINE PIPING EXTERNAL LEAK LARGE	6.0E-10	1.4E+02	8.3E-08
213	RSSPNEL11A	RHS PIPING BETWEEN RHS-VLV-031A AND ALTERNATE CORE COOLING LINE EXTERNAL LEAK LARGE	6.0E-10	1.4E+02	8.3E-08
214	RSSPNEL10A	CSS PIPING BETWEEN RHS-VLV-034A AND A-CS/RHR PUMP SUCTION LINE EXTERNAL LEAK LARGE	6.0E-10	1.4E+02	8.3E-08
215	RSSPNEL07A	CSS C/V SPRAY LINE A (OUTSIDE C/V) PIPING EXTERNAL LEAK LARGE	6.0E-10	1.4E+02	8.3E-08
216	RSSPNEL07B	CSS C/V SPRAY LINE B (OUTSIDE C/V) PIPING EXTERNAL LEAK LARGE	6.0E-10	1.4E+02	8.3E-08
217	RSSPNEL12B	RHS-FCV-021 LINE PIPING EXTERNAL LEAK LARGE	6.0E-10	1.4E+02	8.3E-08
218	RSSPNEL03C	CSS PIPING BETWEEN CSS-MOV-001C AND C-CS/RHR PUMP EXTERNAL LEAK LARGE	6.0E-10	1.4E+02	8.3E-08
219	RSSPNEL04A	RHS A-CS/RHR PUMP LINE PIPING EXTERNAL LEAK	6.0E-10	1.4E+02	8.3E-08
220	RSSPNEL03A	CSS PIPING BETWEEN CSS-MOV-001A AND A-CS/RHR PUMP EXTERNAL LEAK LARGE	6.0E-10	1.4E+02	8.3E-08
221	RWSCF4SUPR001-124	SIS-SST-001A,B,C (ESS/CS STRAINER) PLUG DURING OPERATION (CCF)	3.7E-06	1.3E+02	4.7E-04
222	EFWCF4CVOD012-234	EFS-VLV-012A,C,D FAIL TO OPEN (CCF)	6.2E-08	1.3E+02	7.9E-06
223	EPSCF4IVFFIBC-123	CLASS-1E UPS UNIT A,B,D FAIL TO OPERATE (CCF)	5.0E-07	1.2E+02	6.1E-05
224	RSSCF4PMAD001-ALL	RHS-MPP-001A,B,C,D (CS/RHR PUMP) FAIL TO START (CCF)	1.9E-05	1.2E+02	2.3E-03
225	RSSCF4PMSR001-ALL	RHS-MPP-001A,B,C,D (CS/RHR PUMP) FAIL TO RUN DURING FIRST HOUR OF OPERATION (CCF)	5.0E-06	1.2E+02	6.0E-04
226	RSSCF4RHPR001-ALL	RHS-MHX-001A,B,C,D (CS/RHR HX) PLUG / FOUL (CCF)	4.8E-06	1.2E+02	5.8E-04
227	RSSCF4CVOD004-ALL	RHS-VLV-004A,B,C,D FAIL TO OPEN (CCF)	4.3E-07	1.2E+02	5.2E-05

Table 19.1-31 Basic Events (Hardware Failure, Human Error) RAW (Sheet 12 of 45)

Rank	Basic Event ID	Basic Event Description	Basic Event Probability	RAW	FV Importance
228	EPSCF4CBSO72AU-124	EPS 72/AUA,C,D (BREAKER) SPURIOUS OPEN (CCF)	2.9E-08	1.2E+02	3.5E-06
229	EPSCF4CBSO52UA-124	EPS 52/UAA,C,D (BREAKER) SPURIOUS OPEN (CCF)	2.9E-08	1.2E+02	3.5E-06
230	RSSCF4PMLR001-ALL	RHS-MPP-001A,B,C,D (CS/RHR PUMP) FAIL TO RUN AFTER FIRST HOUR OF OPERATION (CCF)	1.7E-06	1.2E+02	2.1E-04
231	RSSCF4MVOD145-ALL	NCS-MOV-145A,B,C,D FAIL TO OPEN (CCF)	8.4E-05	1.2E+02	9.9E-03
232	EPSCBFO52UAT-AD	EPS 52/UATA,D (BREAKER) FAIL TO OPEN (CCF)	5.0E-06	1.2E+02	5.7E-04
233	EPSCBFO52RAT-AD	EPS 52/RATA,D (BREAKER) FAIL TO OPEN (CCF)	5.0E-06	1.2E+02	5.7E-04
234	EPSCF4CBSC52UAT-14	EPS 52/UATA,D (BREAKER) SPURIOUS CLOSE (CCF)	3.4E-08	1.2E+02	3.9E-06
235	EPSCF4CBSC52RAT-14	EPS 52/RATA,D (BREAKER) SPURIOUS CLOSE (CCF)	3.4E-08	1.2E+02	3.9E-06
236	EPSCF4CBSO52STH-123	EPS 52/STHA,B,C (BREAKER) SPURIOUS OPEN (CCF)	2.9E-08	1.1E+02	3.3E-06
237	EPSCF4CBSO52STL-123	EPS 52/STLA,B,C (BREAKER) SPURIOUS OPEN (CCF)	2.9E-08	1.1E+02	3.3E-06
238	EPSCF4CBSO52LC-124	EPS 52/LCA,B,C (BREAKER) SPURIOUS OPEN (CCF)	2.9E-08	1.1E+02	3.3E-06
239	MSPPNELPA1	MSS MAIN STEAM LINE PIPING EXTERNAL LEAK LARGE	6.0E-10	1.0E+02	6.2E-08
240	EPSCF4CBSO72AU-123	EPS 72/AUA,B,D (BREAKER) SPURIOUS OPEN (CCF)	2.9E-08	1.0E+02	2.9E-06
241	EPSCF4CBSO52UA-123	EPS 52/UAA,B,D (BREAKER) SPURIOUS OPEN (CCF)	2.9E-08	1.0E+02	2.9E-06
242	EPSCF4CBSO52LC-23	EPS 52/LCC,D (BREAKER) SPURIOUS OPEN (CCF)	3.4E-08	8.4E+01	2.8E-06
243	EPSCF4CBSO52STL-34	EPS 52/STLC,D (BREAKER) SPURIOUS OPEN (CCF)	3.4E-08	8.4E+01	2.8E-06
244	EPSCF4CBSO52STH-24	EPS 52/STHC,D (BREAKER) SPURIOUS OPEN (CCF)	3.4E-08	8.4E+01	2.8E-06
245	HPICF4PMAD001-ALL	SIS-MPP-001A,B,C,D (SI PUMP) FAIL TO START (CCF)	1.1E-04	8.1E+01	9.0E-03
246	HPICF4PMSR001-ALL	SIS-MPP-001A,B,C,D (SI PUMP) FAIL TO RUN DURING FIRST HOUR OF OPERATION (CCF)	8.5E-06	7.9E+01	6.6E-04
247	HPICF4PMLR001-ALL	SIS-MPP-001A,B,C,D (SI PUMP) FAIL TO RUN AFTER FIRST HOUR OF OPERATION (CCF)	2.9E-06	7.6E+01	2.2E-04
248	HPICF4CVOD013-ALL	SIS-VLV-013A,B,C,D FAIL TO OPEN (CCF)	1.0E-06	7.5E+01	7.4E-05
249	HPICF4CVOD012-ALL	SIS-VLV-012A,B,C,D FAIL TO OPEN (CCF)	1.0E-06	7.5E+01	7.4E-05
250	HPICF4CVOD004-ALL	SIS-VLV-004A,B,C,D FAIL TO OPEN (CCF)	1.0E-06	7.5E+01	7.4E-05

Table 19.1-31 Basic Events (Hardware Failure, Human Error) RAW (Sheet 13 of 45)

Rank	Basic Event ID	Basic Event Description	Basic Event Probability	RAW	FV Importance
251	HPICF4CVOD010-ALL	SIS-VLV-010A,B,C,D FAIL TO OPEN (CCF)	1.0E-06	7.5E+01	7.4E-05
252	EPSCBFO52RAT-BCD	EPS 52/RATB,C,D (BREAKER) FAIL TO OPEN (CCF)	5.2E-06	7.3E+01	3.7E-04
253	EPSCF4CBSC52RAT-234	EPS 52/RATB,C,D (BREAKER) SPURIOUS CLOSE (CCF)	2.9E-08	7.3E+01	2.1E-06
254	EPSCBFO52UAT-BCD	EPS 52/UATB,C,D (BREAKER) FAIL TO OPEN (CCF)	5.2E-06	7.3E+01	3.7E-04
255	EPSCF4CBSC52UAT-234	EPS 52/UATB,C,D (BREAKER) SPURIOUS CLOSE (CCF)	2.9E-08	7.3E+01	2.1E-06
256	EFWCF4CVOD012-134	EFS-VLV-012A,B,D FAIL TO OPEN (CCF)	6.2E-08	7.0E+01	4.3E-06
257	HPICF4PMAD001-123	SIS-MPP-001B,C,D (SI PUMP) FAIL TO START (CCF)	9.5E-06	6.2E+01	5.8E-04
258	HPICF4PMSR001-123	SIS-MPP-001B,C,D (SI PUMP) FAIL TO RUN DURING FIRST HOUR OF OPERATION (CCF)	3.3E-06	6.1E+01	2.0E-04
259	EPSCBFO52UAT-ABC	EPS 52/UATA,B,C (BREAKER) FAIL TO OPEN (CCF)	5.2E-06	6.1E+01	3.1E-04
260	EPSCBFO52RAT-ABC	EPS 52/RATA,B,C (BREAKER) FAIL TO OPEN (CCF)	5.2E-06	6.1E+01	3.1E-04
261	EPSCF4CBSC52UAT-123	EPS 52/UATA,B,C (BREAKER) SPURIOUS CLOSE (CCF)	2.9E-08	6.1E+01	1.7E-06
262	EPSCF4CBSC52RAT-123	EPS 52/RATA,B,C (BREAKER) SPURIOUS CLOSE (CCF)	2.9E-08	6.1E+01	1.7E-06
263	HPICF4PMLR001-123	SIS-MPP-001B,C,D (SI PUMP) FAIL TO RUN AFTER FIRST HOUR OF OPERATION (CCF)	1.1E-06	6.0E+01	6.6E-05
264	HPICF4CVOD010-123	SIS-VLV-010B,C,D FAIL TO OPEN (CCF)	2.7E-07	5.8E+01	1.5E-05
265	HPICF4CVOD012-123	SIS-VLV-012B,C,D FAIL TO OPEN (CCF)	2.7E-07	5.8E+01	1.5E-05
266	HPICF4CVOD013-123	SIS-VLV-013B,C,D FAIL TO OPEN (CCF)	2.7E-07	5.8E+01	1.5E-05
267	HPICF4CVOD004-123	SIS-VLV-004B,C,D FAIL TO OPEN (CCF)	2.7E-07	5.8E+01	1.5E-05
268	EFWXVEL013D	EFS-VLV-013D EXTERNAL LEAK LARGE	7.2E-08	4.9E+01	3.5E-06
269	EFWXVEL013A	EFS-VLV-013A EXTERNAL LEAK LARGE	7.2E-08	4.9E+01	3.5E-06
270	EFWCVEL012D	EFS-VLV-012D EXTERNAL LEAK LARGE	4.8E-08	4.9E+01	2.3E-06
271	EFWCVEL012A	EFS-VLV-012A EXTERNAL LEAK LARGE	4.8E-08	4.9E+01	2.3E-06
272	EFWCF4CVOD012-123	EFS-VLV-012A,B,C FAIL TO OPEN (CCF)	6.2E-08	4.7E+01	2.9E-06
273	EFWCF4CVOD012-124	EFS-VLV-012B,C,D FAIL TO OPEN (CCF)	6.2E-08	4.7E+01	2.9E-06
274	EFWCVEL018A	EFS-VLV-018A EXTERNAL LEAK LARGE	4.8E-08	4.6E+01	2.2E-06

Table 19.1-31 Basic Events (Hardware Failure, Human Error) RAW (Sheet 14 of 45)

Rank	Basic Event ID	Basic Event Description	Basic Event Probability	RAW	FV Importance
275	EFWCVEL018D	EFS-VLV-018D EXTERNAL LEAK LARGE	4.8E-08	4.6E+01	2.2E-06
276	EPSCF4CBSO52LC-134	EPS 52/LCA,B,D (BREAKER) SPURIOUS OPEN (CCF)	2.9E-08	4.5E+01	1.3E-06
277	EPSCF4DLLRGTG-234	CLASS-1E GTG A,C,D FAIL TO RUN AFTER FIRST HOUR OF OPERATION (CCF)	2.5E-04	4.2E+01	1.0E-02
278	EPSCF4DLADGTG-134	CLASS-1E GTG A,C,D FAIL TO START (CCF)	5.2E-05	4.2E+01	2.2E-03
279	EPSCF4DLSRGTG-234	CLASS-1E GTG A,C,D FAIL TO RUN DURING FIRST HOUR OF OPERATION (CCF)	3.9E-05	4.2E+01	1.6E-03
280	EPSCF4SEFFGTG-234	CLASS-1E GTG A,C,D SEQUENCER FAIL TO OPERATE (CCF)	1.3E-05	4.2E+01	5.2E-04
281	EPSCF4CBFC52EPS-123	EPS 52/EPSA,C,D (BREAKER) FAIL TO CLOSE (CCF)	5.2E-06	4.2E+01	2.1E-04
282	EPSCF4CBSO52EPS-234	EPS 52/EPSA,C,D (BREAKER) SPURIOUS OPEN (CCF)	2.9E-08	4.2E+01	1.2E-06
283	EFWMVEL017D	EFS-MOV-017D EXTERNAL LEAK LARGE	2.4E-08	4.2E+01	9.8E-07
284	EFWMVEL014D	EFS-MOV-014D EXTERNAL LEAK LARGE	2.4E-08	4.2E+01	9.8E-07
285	EFWPNELSGD	EFS D-SG SUPPLY LINE PIPING EXTERNAL LEAK LARGE	6.0E-10	4.2E+01	2.5E-08
286	EFWMVEL017A	EFS-MOV-017A EXTERNAL LEAK LARGE	2.4E-08	4.0E+01	9.5E-07
287	EFWMVEL019D	EFS-MOV-019D EXTERNAL LEAK LARGE	2.4E-08	4.0E+01	9.5E-07
288	EFWMVEL019A	EFS-MOV-019A EXTERNAL LEAK LARGE	2.4E-08	4.0E+01	9.5E-07
289	EFWMVEL014A	EFS-MOV-014A EXTERNAL LEAK LARGE	2.4E-08	4.0E+01	9.5E-07
290	EFWPNELSGA	EFS A-SG SUPPLY LINE PIPING EXTERNAL LEAK LARGE	6.0E-10	4.0E+01	2.4E-08
291	RWSCF4SUPR001-23	SIS-SST-001C,D (ESS/CS STRAINER) PLUG DURING OPERATION (CCF)	3.0E-06	3.7E+01	1.1E-04
292	EPSCF4CBSO52STH-14	EPS 52/STHA,D (BREAKER) SPURIOUS OPEN (CCF)	3.4E-08	3.5E+01	1.1E-06
293	EPSCF4CBSO52STL-14	EPS 52/STLA,D (BREAKER) SPURIOUS OPEN (CCF)	3.4E-08	3.5E+01	1.1E-06
294	EFWCF2PTAD001AD-ALL	EFS-MPP-001A,D (EFW PUMP) FAIL TO START (CCF)	4.5E-04	3.5E+01	1.5E-02
295	EFWCF2PTSR001AD-ALL	EFS-MPP-001A,D (EFW PUMP) FAIL TO RUN DURING FIRST HOUR OF OPERATION (CCF)	1.1E-04	3.5E+01	3.8E-03

Table 19.1-31 Basic Events (Hardware Failure, Human Error) RAW (Sheet 15 of 45)

Rank	Basic Event ID	Basic Event Description	Basic Event Probability	RAW	FV Importance
296	EFWCF2PTLR001AD-ALL	EFS-MPP-001A,D (EFW PUMP) FAIL TO RUN AFTER FIRST HOUR OF OPERATION (CCF)	7.2E-05	3.5E+01	2.4E-03
297	EFWCVOD008B	EFS-VLV-008B FAIL TO OPEN	9.6E-06	3.4E+01	3.2E-04
298	EFWCVPR008B	EFS-VLV-008B PLUG	2.4E-06	3.4E+01	7.9E-05
299	EFWCVEL008B	EFS-VLV-008B EXTERNAL LEAK LARGE	4.8E-08	3.4E+01	1.6E-06
300	EFWCF2MVOD103-ALL	EFS-MOV-103A,D FAIL TO OPEN (CCF)	4.2E-05	3.4E+01	1.4E-03
301	SGNBTSWCCF3	NON-SAFETY (PCMS) APPLICATION SOFTWARE CCF	1.0E-04	3.4E+01	3.3E-03
302	PZRSVCD120	RCS-SRV-120 FAIL TO RE-CLOSE	7.0E-05	3.3E+01	2.3E-03
303	PZRSVCD121	RCS-SRV-121 FAIL TO RE-CLOSE	7.0E-05	3.3E+01	2.3E-03
304	PZRSVCD122	RCS-SRV-122 FAIL TO RE-CLOSE	7.0E-05	3.3E+01	2.3E-03
305	PZRSVCD123	RCS-SRV-123 FAIL TO RE-CLOSE	7.0E-05	3.3E+01	2.3E-03
306	EFWXVPR007B	EFS-VLV-007B PLUG	2.4E-06	3.3E+01	7.7E-05
307	EFWXVEL009D	EFS-VLV-009D EXTERNAL LEAK LARGE	7.2E-08	3.3E+01	2.3E-06
308	EFWXVEL007B	EFS-VLV-007B EXTERNAL LEAK LARGE	7.2E-08	3.3E+01	2.3E-06
309	EFWXVEL009C	EFS-VLV-009C EXTERNAL LEAK LARGE	7.2E-08	3.3E+01	2.3E-06
310	EFWTNEL001B	EFS-MPT-001B (B-EFW PIT) EXTERNAL LEAK LARGE	4.8E-08	3.3E+01	1.5E-06
311	EFWPNELCSTB	EFS B-EFW PIT OUTLET PIPING EXTERNAL LEAK LARGE	6.0E-10	3.3E+01	1.9E-08
312	CHICF2PMBD001-ALL	CVS-MPP-001A,B (CHI PUMP) FAIL TO START (CCF)	2.0E-04	3.2E+01	6.2E-03
313	CHIORPR080	CVS-FE-080 (ORIFICE) PLUG	2.4E-05	3.1E+01	7.3E-04
314	CHIORPR090	CVS-FE-090 (ORIFICE) PLUG	2.4E-05	3.1E+01	7.3E-04
315	CHIORPR060	CVS-FE-060 (ORIFICE) PLUG	2.4E-05	3.1E+01	7.3E-04
316	CHIORPR070	CVS-FE-070 (ORIFICE) PLUG	2.4E-05	3.1E+01	7.3E-04
317	CHICVOD182D	CVS-VLV-182D FAIL TO OPEN	1.2E-05	3.1E+01	3.6E-04
318	CHICVOD182A	CVS-VLV-182A FAIL TO OPEN	1.2E-05	3.1E+01	3.6E-04
319	CHICVOD182B	CVS-VLV-182B FAIL TO OPEN	1.2E-05	3.1E+01	3.6E-04
320	CHICVOD182C	CVS-VLV-182C FAIL TO OPEN	1.2E-05	3.1E+01	3.6E-04

Table 19.1-31 Basic Events (Hardware Failure, Human Error) RAW (Sheet 16 of 45)

Rank	Basic Event ID	Basic Event Description	Basic Event Probability	RAW	FV Importance
321	CHICVOD179B	CVS-VLV-179B FAIL TO OPEN	1.2E-05	3.1E+01	3.6E-04
322	CHICVOD179A	CVS-VLV-179A FAIL TO OPEN	1.2E-05	3.1E+01	3.6E-04
323	CHICVOD179C	CVS-VLV-179C FAIL TO OPEN	1.2E-05	3.1E+01	3.6E-04
324	CHICVOD181A	CVS-VLV-181A FAIL TO OPEN	1.2E-05	3.1E+01	3.6E-04
325	CHICVOD181B	CVS-VLV-181B FAIL TO OPEN	1.2E-05	3.1E+01	3.6E-04
326	CHICVOD179D	CVS-VLV-179D FAIL TO OPEN	1.2E-05	3.1E+01	3.6E-04
327	CHICVOD181D	CVS-VLV-181D FAIL TO OPEN	1.2E-05	3.1E+01	3.6E-04
328	CHICVOD181C	CVS-VLV-181C FAIL TO OPEN	1.2E-05	3.1E+01	3.6E-04
329	CHIAVCM050	CVS-FCV-050 SPURIOUS CLOSE	4.8E-06	3.1E+01	1.5E-04
330	CHIAVCM165	CVS-AOV-165 SPURIOUS CLOSE	4.8E-06	3.1E+01	1.5E-04
331	CHIXVPR166	CVS-VLV-166 PLUG	2.4E-06	3.1E+01	7.3E-05
332	CHIXVPR170B	CVS-VLV-170B PLUG	2.4E-06	3.1E+01	7.3E-05
333	CHIXVPR164	CVS-VLV-164 PLUG	2.4E-06	3.1E+01	7.3E-05
334	CHIMVPR178D	CVS-MOV-178D PLUG	2.4E-06	3.1E+01	7.3E-05
335	CHIMVPR178C	CVS-MOV-178C PLUG	2.4E-06	3.1E+01	7.3E-05
336	CHIXVPR171B	CVS-VLV-171B PLUG	2.4E-06	3.1E+01	7.3E-05
337	CHIXVPR180A	CVS-VLV-180A PLUG	2.4E-06	3.1E+01	7.3E-05
338	CHIAVPR050	CVS-FCV-050 PLUG	2.4E-06	3.1E+01	7.3E-05
339	CHIXVPR180C	CVS-VLV-180C PLUG	2.4E-06	3.1E+01	7.3E-05
340	CHIXVPR180B	CVS-VLV-180B PLUG	2.4E-06	3.1E+01	7.3E-05
341	CHIAVPR165	CVS-AOV-165 PLUG	2.4E-06	3.1E+01	7.3E-05
342	CHIXVPR177B	CVS-VLV-177B PLUG	2.4E-06	3.1E+01	7.3E-05
343	CHIXVPR177A	CVS-VLV-177A PLUG	2.4E-06	3.1E+01	7.3E-05
344	CHIXVPR177D	CVS-VLV-177D PLUG	2.4E-06	3.1E+01	7.3E-05
345	CHIXVPR177C	CVS-VLV-177C PLUG	2.4E-06	3.1E+01	7.3E-05
346	CHICVPR181B	CVS-VLV-181B PLUG	2.4E-06	3.1E+01	7.3E-05

Table 19.1-31 Basic Events (Hardware Failure, Human Error) RAW (Sheet 17 of 45)

Rank	Basic Event ID	Basic Event Description	Basic Event Probability	RAW	FV Importance
347	CHICVPR179A	CVS-VLV-179A PLUG	2.4E-06	3.1E+01	7.3E-05
348	CHICVPR181D	CVS-VLV-181D PLUG	2.4E-06	3.1E+01	7.3E-05
349	CHICVPR181C	CVS-VLV-181C PLUG	2.4E-06	3.1E+01	7.3E-05
350	CHICVPR179C	CVS-VLV-179C PLUG	2.4E-06	3.1E+01	7.3E-05
351	CHICVPR179B	CVS-VLV-179B PLUG	2.4E-06	3.1E+01	7.3E-05
352	CHICVPR181A	CVS-VLV-181A PLUG	2.4E-06	3.1E+01	7.3E-05
353	CHICVPR179D	CVS-VLV-179D PLUG	2.4E-06	3.1E+01	7.3E-05
354	CHICVPR182A	CVS-VLV-182A PLUG	2.4E-06	3.1E+01	7.3E-05
355	CHICVPR182D	CVS-VLV-182D PLUG	2.4E-06	3.1E+01	7.3E-05
356	CHICVPR182C	CVS-VLV-182C PLUG	2.4E-06	3.1E+01	7.3E-05
357	CHIMVPR178B	CVS-MOV-178B PLUG	2.4E-06	3.1E+01	7.3E-05
358	CHIMVPR178A	CVS-MOV-178A PLUG	2.4E-06	3.1E+01	7.3E-05
359	CHIXVPR168	CVS-VLV-168 PLUG	2.4E-06	3.1E+01	7.3E-05
360	CHICVPR182B	CVS-VLV-182B PLUG	2.4E-06	3.1E+01	7.3E-05
361	CHIFLPR003B	CVS-MFT-003B (SEAL WATER INJECTION FILTER) PLUG	2.4E-06	3.1E+01	7.3E-05
362	CHIXVPR173	CVS-VLV-173 PLUG	2.4E-06	3.1E+01	7.3E-05
363	CHIXVPR180D	CVS-VLV-180D PLUG	2.4E-06	3.1E+01	7.3E-05
364	CHIMVCM178D	CVS-MOV-178D SPURIOUS CLOSE	9.6E-07	3.1E+01	2.9E-05
365	CHIMVCM178B	CVS-MOV-178B SPURIOUS CLOSE	9.6E-07	3.1E+01	2.9E-05
366	CHIMVCM178A	CVS-MOV-178A SPURIOUS CLOSE	9.6E-07	3.1E+01	2.9E-05
367	CHIMVCM178C	CVS-MOV-178C SPURIOUS CLOSE	9.6E-07	3.1E+01	2.9E-05
368	ACWCF2MVOD324-ALL	NCS-MOV-324A,B FAIL TO OPEN (CCF)	4.7E-05	3.1E+01	1.4E-03
369	ACWCF2MVCD316-ALL	NCS-MOV-316A,B FAIL TO CLOSE (CCF)	4.7E-05	3.1E+01	1.4E-03
370	ACWCF2MVOD322-ALL	NCS-MOV-322A,B FAIL TO OPEN (CCF)	4.7E-05	3.1E+01	1.4E-03
371	CHIMVPR031C	CVS-LCV-031C PLUG	2.4E-06	3.1E+01	7.3E-05
372	CHICVPR125	CVS-VLV-125 PLUG	2.4E-06	3.1E+01	7.3E-05

Table 19.1-31 Basic Events (Hardware Failure, Human Error) RAW (Sheet 18 of 45)

Rank	Basic Event ID	Basic Event Description	Basic Event Probability	RAW	FV Importance
373	CHIMVPR031B	CVS-LCV-031B PLUG	2.4E-06	3.1E+01	7.3E-05
374	CHIMVCM031B	CVS-LCV-031B SPURIOUS CLOSE	9.6E-07	3.1E+01	2.9E-05
375	CHIMVCM031C	CVS-LCV-031C SPURIOUS CLOSE	9.6E-07	3.1E+01	2.9E-05
376	CHITNEL001	CVS-MTK-001 (VCT) EXTERNAL LEAK LARGE	4.8E-08	3.1E+01	1.5E-06
377	EFWCVOD008A	EFS-VLV-008A FAIL TO OPEN	9.6E-06	3.1E+01	2.9E-04
378	EFWCVPR008A	EFS-VLV-008A PLUG	2.4E-06	3.1E+01	7.2E-05
379	EFWCVEL008A	EFS-VLV-008A EXTERNAL LEAK LARGE	4.8E-08	3.1E+01	1.4E-06
380	ACWCF2CVCD306-ALL	NCS-VLV-306A,B FAIL TO CLOSE (CCF)	4.7E-06	3.1E+01	1.4E-04
381	CHIRIEL001	CVS-MHX-001 (REGENERATIVE HX) TUBE EXTERNAL LEAK LARGE	7.2E-07	3.1E+01	2.1E-05
382	CHIPMEL001B	CVS-MPP-001B (B-CHI PUMP) EXTERNAL LEAK LARGE	1.9E-07	3.1E+01	5.7E-06
383	CHIPMEL001A	CVS-MPP-001A (A-CHI PUMP) EXTERNAL LEAK LARGE	1.9E-07	3.1E+01	5.7E-06
384	CHIXVEL145	CVS-VLV-145 EXTERNAL LEAK LARGE	7.2E-08	3.1E+01	2.1E-06
385	CHIXVEL126A	CVS-VLV-126A EXTERNAL LEAK LARGE	7.2E-08	3.1E+01	2.1E-06
386	CHIXVEL171B	CVS-VLV-171B EXTERNAL LEAK LARGE	7.2E-08	3.1E+01	2.1E-06
387	CHIXVEL144	CVS-VLV-144 EXTERNAL LEAK LARGE	7.2E-08	3.1E+01	2.1E-06
388	CHIXVEL147	CVS-VLV-147 EXTERNAL LEAK LARGE	7.2E-08	3.1E+01	2.1E-06
389	CHIXVEL130B	CVS-VLV-130B EXTERNAL LEAK LARGE	7.2E-08	3.1E+01	2.1E-06
390	CHIXVEL132A	CVS-VLV-132A EXTERNAL LEAK LARGE	7.2E-08	3.1E+01	2.1E-06
391	CHIXVEL132B	CVS-VLV-132B EXTERNAL LEAK LARGE	7.2E-08	3.1E+01	2.1E-06
392	CHIXVEL133	CVS-VLV-133 EXTERNAL LEAK LARGE	7.2E-08	3.1E+01	2.1E-06
393	CHIXVEL166	CVS-VLV-166 EXTERNAL LEAK LARGE	7.2E-08	3.1E+01	2.1E-06
394	CHIXVEL164	CVS-VLV-164 EXTERNAL LEAK LARGE	7.2E-08	3.1E+01	2.1E-06
395	CHIXVEL163	CVS-VLV-163 EXTERNAL LEAK LARGE	7.2E-08	3.1E+01	2.1E-06
396	CHIXVEL168	CVS-VLV-168 EXTERNAL LEAK LARGE	7.2E-08	3.1E+01	2.1E-06
397	CHIXVEL170B	CVS-VLV-170B EXTERNAL LEAK LARGE	7.2E-08	3.1E+01	2.1E-06

Table 19.1-31 Basic Events (Hardware Failure, Human Error) RAW (Sheet 19 of 45)

Rank	Basic Event ID	Basic Event Description	Basic Event Probability	RAW	FV Importance
398	CHIXVEL173	CVS-VLV-173 EXTERNAL LEAK LARGE	7.2E-08	3.1E+01	2.1E-06
399	CHIXVEL130A	CVS-VLV-130A EXTERNAL LEAK LARGE	7.2E-08	3.1E+01	2.1E-06
400	CHIXVEL167	CVS-VLV-167 EXTERNAL LEAK LARGE	7.2E-08	3.1E+01	2.1E-06
401	CHIXVEL126B	CVS-VLV-126B EXTERNAL LEAK LARGE	7.2E-08	3.1E+01	2.1E-06
402	CHICVEL131A	CVS-VLV-131A EXTERNAL LEAK LARGE	4.8E-08	3.1E+01	1.4E-06
403	CHICVEL131B	CVS-VLV-131B EXTERNAL LEAK LARGE	4.8E-08	3.1E+01	1.4E-06
404	CHICVEL153	CVS-VLV-153 EXTERNAL LEAK LARGE	4.8E-08	3.1E+01	1.4E-06
405	CHICVEL129B	CVS-VLV-129B EXTERNAL LEAK LARGE	4.8E-08	3.1E+01	1.4E-06
406	CHICVEL125	CVS-VLV-125 EXTERNAL LEAK LARGE	4.8E-08	3.1E+01	1.4E-06
407	CHICVEL129A	CVS-VLV-129A EXTERNAL LEAK LARGE	4.8E-08	3.1E+01	1.4E-06
408	CHICVEL161	CVS-VLV-161 EXTERNAL LEAK LARGE	4.8E-08	3.1E+01	1.4E-06
409	CHICVEL160	CVS-VLV-160 EXTERNAL LEAK LARGE	4.8E-08	3.1E+01	1.4E-06
410	CHIMVEL152	CVS-MOV-152 EXTERNAL LEAK LARGE	2.4E-08	3.1E+01	7.1E-07
411	CHIMVEL031C	CVS-LCV-031C EXTERNAL LEAK LARGE	2.4E-08	3.1E+01	7.1E-07
412	CHIMVEL031B	CVS-LCV-031B EXTERNAL LEAK LARGE	2.4E-08	3.1E+01	7.1E-07
413	CHIMVEL151	CVS-MOV-151 EXTERNAL LEAK LARGE	2.4E-08	3.1E+01	7.1E-07
414	CHIAVEL048	CVS-FCV-048 EXTERNAL LEAK LARGE	2.2E-08	3.1E+01	6.4E-07
415	CHIAVEL159	CVS-AOV-159 EXTERNAL LEAK LARGE	2.2E-08	3.1E+01	6.4E-07
416	CHIAVEL155	CVS-AOV-155 EXTERNAL LEAK LARGE	2.2E-08	3.1E+01	6.4E-07
417	CHIAVEL165	CVS-AOV-165 EXTERNAL LEAK LARGE	2.2E-08	3.1E+01	6.4E-07
418	CHIAVEL050	CVS-FCV-050 EXTERNAL LEAK LARGE	2.2E-08	3.1E+01	6.4E-07
419	CHIAVEL146	CVS-AOV-146 EXTERNAL LEAK LARGE	2.2E-08	3.1E+01	6.4E-07
420	CHIPNELPIPE1	CVS CHARGING INJECTION LINE PIPING EXTERNAL LEAK LARGE	6.0E-10	3.1E+01	1.8E-08
421	CHICF2PMYR001-R-ALL	CVS-MPP-001A,B (CHI PUMP) FAIL TO RUN (CCF)	5.0E-06	3.1E+01	1.5E-04
422	EFWXVPR007A	EFS-VLV-007A PLUG	2.4E-06	3.0E+01	7.1E-05

Table 19.1-31 Basic Events (Hardware Failure, Human Error) RAW (Sheet 20 of 45)

Rank	Basic Event ID	Basic Event Description	Basic Event Probability	RAW	FV Importance
423	EFWXVEL009A	EFS-VLV-009A EXTERNAL LEAK LARGE	7.2E-08	3.0E+01	2.1E-06
424	EFWXVEL007A	EFS-VLV-007A EXTERNAL LEAK LARGE	7.2E-08	3.0E+01	2.1E-06
425	EFWXVEL009B	EFS-VLV-009B EXTERNAL LEAK LARGE	7.2E-08	3.0E+01	2.1E-06
426	EFWTNEL001A	EFS-MPT-001A (A-EFW PIT) EXTERNAL LEAK LARGE	4.8E-08	3.0E+01	1.4E-06
427	EFWPNELCSTA	EFS A-EFW PIT OUTLET PIPING EXTERNAL LEAK LARGE	6.0E-10	3.0E+01	1.8E-08
428	EPSCF4CBSO52LC-34	EPS 52/LCA,D (BREAKER) SPURIOUS OPEN (CCF)	3.4E-08	2.9E+01	9.5E-07
429	MSRCF4AVCD515-ALL	MSS-SMV-515A,B,C,D FAIL TO CLOSE (CCF)	1.8E-04	2.9E+01	4.9E-03
430	MSRCF4AVCD515-23	MSS-SMV-515B,C FAIL TO CLOSE (CCF)	5.2E-05	2.9E+01	1.5E-03
431	MSRCF4AVCD515-34	MSS-SMV-515A,D FAIL TO CLOSE (CCF)	5.2E-05	2.9E+01	1.5E-03
432	MSRCF4AVCD515-13	MSS-SMV-515A,C FAIL TO CLOSE (CCF)	5.2E-05	2.9E+01	1.5E-03
433	MSRCF4AVCD515-234	MSS-SMV-515A,B,D FAIL TO CLOSE (CCF)	2.6E-05	2.9E+01	7.2E-04
434	MSRCF4AVCD515-123	MSS-SMV-515A,B,C FAIL TO CLOSE (CCF)	2.6E-05	2.9E+01	7.2E-04
435	MSRCF4AVCD515-134	MSS-SMV-515A,C,D FAIL TO CLOSE (CCF)	2.6E-05	2.9E+01	7.2E-04
436	MSRCF4AVCD515-12	MSS-SMV-515B,C FAIL TO CLOSE (CCF)	5.2E-05	2.9E+01	1.4E-03
437	MSRCF4AVCD515-24	MSS-SMV-515B,D FAIL TO CLOSE (CCF)	5.2E-05	2.9E+01	1.4E-03
438	MSRCF4AVCD515-14	MSS-SMV-515C,D FAIL TO CLOSE (CCF)	5.2E-05	2.9E+01	1.4E-03
439	MSRCF4AVCD515-124	MSS-SMV-515B,C,D FAIL TO CLOSE (CCF)	2.6E-05	2.9E+01	7.2E-04
440	EFWCF4CVOD012-24	EFS-VLV-012C,D FAIL TO OPEN (CCF)	2.3E-07	2.8E+01	6.2E-06
441	EPSCF4CBSO72DD1-ALL	EPS 72/DDAA,BB,BC,AD (BREAKER) SPURIOUS OPEN (CCF)	1.6E-07	2.8E+01	4.3E-06
442	EPSCF4CBSO72DD2-ALL	EPS 72/DDDA,BA,BD,DD (BREAKER) SPURIOUS OPEN (CCF)	1.6E-07	2.8E+01	4.3E-06
443	EPSCF4CBSO72DD2-14	EPS 72/DDDA,DD (BREAKER) SPURIOUS OPEN (CCF)	3.4E-08	2.8E+01	9.2E-07
444	EPSCF4CBSO72DD1-12	EPS 72/DDAA,AD (BREAKER) SPURIOUS OPEN (CCF)	3.4E-08	2.8E+01	9.2E-07
445	EPSCF4CBSO72DD2-124	EPS 72/DDDA,BA,DD (BREAKER) SPURIOUS OPEN (CCF)	2.9E-08	2.8E+01	8.0E-07
446	EPSCF4CBSO72DD1-123	EPS 72/DDAA,BB,AD (BREAKER) SPURIOUS OPEN (CCF)	2.9E-08	2.8E+01	8.0E-07
447	EPSCF4CBSO72DD2-134	EPS 72/DDDA,BD,DD (BREAKER) SPURIOUS OPEN (CCF)	2.9E-08	2.8E+01	8.0E-07

Table 19.1-31 Basic Events (Hardware Failure, Human Error) RAW (Sheet 21 of 45)

Rank	Basic Event ID	Basic Event Description	Basic Event Probability	RAW	FV Importance
448	EPSCF4CBSO72DD1-124	EPS 72/DDAA,BC,AD (BREAKER) SPURIOUS OPEN (CCF)	2.9E-08	2.8E+01	8.0E-07
449	CHIXVEL177D	CVS-VLV-177D EXTERNAL LEAK LARGE	7.2E-08	2.8E+01	1.9E-06
450	CHIXVEL180C	CVS-VLV-180C EXTERNAL LEAK LARGE	7.2E-08	2.8E+01	1.9E-06
451	CHIXVEL177A	CVS-VLV-177A EXTERNAL LEAK LARGE	7.2E-08	2.8E+01	1.9E-06
452	CHIXVEL180D	CVS-VLV-180D EXTERNAL LEAK LARGE	7.2E-08	2.8E+01	1.9E-06
453	CHIXVEL180B	CVS-VLV-180B EXTERNAL LEAK LARGE	7.2E-08	2.8E+01	1.9E-06
454	CHIXVEL180A	CVS-VLV-180A EXTERNAL LEAK LARGE	7.2E-08	2.8E+01	1.9E-06
455	CHIXVEL177C	CVS-VLV-177C EXTERNAL LEAK LARGE	7.2E-08	2.8E+01	1.9E-06
456	CHIXVEL177B	CVS-VLV-177B EXTERNAL LEAK LARGE	7.2E-08	2.8E+01	1.9E-06
457	CHICVEL181B	CVS-VLV-181B EXTERNAL LEAK LARGE	4.8E-08	2.8E+01	1.3E-06
458	CHICVEL181C	CVS-VLV-181C EXTERNAL LEAK LARGE	4.8E-08	2.8E+01	1.3E-06
459	CHICVEL181D	CVS-VLV-181D EXTERNAL LEAK LARGE	4.8E-08	2.8E+01	1.3E-06
460	CHICVEL182A	CVS-VLV-182A EXTERNAL LEAK LARGE	4.8E-08	2.8E+01	1.3E-06
461	CHICVEL182B	CVS-VLV-182B EXTERNAL LEAK LARGE	4.8E-08	2.8E+01	1.3E-06
462	CHICVEL182D	CVS-VLV-182D EXTERNAL LEAK LARGE	4.8E-08	2.8E+01	1.3E-06
463	CHICVEL182C	CVS-VLV-182C EXTERNAL LEAK LARGE	4.8E-08	2.8E+01	1.3E-06
464	CHICVEL179C	CVS-VLV-179C EXTERNAL LEAK LARGE	4.8E-08	2.8E+01	1.3E-06
465	CHICVEL179B	CVS-VLV-179B EXTERNAL LEAK LARGE	4.8E-08	2.8E+01	1.3E-06
466	CHICVEL179A	CVS-VLV-179A EXTERNAL LEAK LARGE	4.8E-08	2.8E+01	1.3E-06
467	CHICVEL181A	CVS-VLV-181A EXTERNAL LEAK LARGE	4.8E-08	2.8E+01	1.3E-06
468	CHICVEL179D	CVS-VLV-179D EXTERNAL LEAK LARGE	4.8E-08	2.8E+01	1.3E-06
469	CHIMVEL178D	CVS-MOV-178D EXTERNAL LEAK LARGE	2.4E-08	2.8E+01	6.4E-07
470	CHIMVEL178C	CVS-MOV-178C EXTERNAL LEAK LARGE	2.4E-08	2.8E+01	6.4E-07
471	CHIMVEL178B	CVS-MOV-178B EXTERNAL LEAK LARGE	2.4E-08	2.8E+01	6.4E-07
472	CHIMVEL178A	CVS-MOV-178A EXTERNAL LEAK LARGE	2.4E-08	2.8E+01	6.4E-07
473	CHICVEL595	CVS-VLV-595 EXTERNAL LEAK LARGE	4.8E-08	2.8E+01	1.3E-06

Table 19.1-31 Basic Events (Hardware Failure, Human Error) RAW (Sheet 22 of 45)

Rank	Basic Event ID	Basic Event Description	Basic Event Probability	RAW	FV Importance
474	ACWCVEL306B	NCS-VLV-306B EXTERNAL LEAK LARGE	4.8E-08	2.8E+01	1.3E-06
475	ACWCVEL306A	NCS-VLV-306A EXTERNAL LEAK LARGE	4.8E-08	2.8E+01	1.3E-06
476	ACWMVEL316A	NCS-MOV-316A EXTERNAL LEAK LARGE	2.4E-08	2.8E+01	6.4E-07
477	ACWMVEL316B	NCS-MOV-316B EXTERNAL LEAK LARGE	2.4E-08	2.8E+01	6.4E-07
478	ACWMVEL325B	NCS-MOV-325B EXTERNAL LEAK LARGE	2.4E-08	2.8E+01	6.4E-07
479	ACWMVEL325A	NCS-MOV-325A EXTERNAL LEAK LARGE	2.4E-08	2.8E+01	6.4E-07
480	ACWMVEL324A	NCS-MOV-324A EXTERNAL LEAK LARGE	2.4E-08	2.8E+01	6.4E-07
481	ACWMVEL326B	NCS-MOV-326B EXTERNAL LEAK LARGE	2.4E-08	2.8E+01	6.4E-07
482	ACWMVEL321B	NCS-MOV-321B EXTERNAL LEAK LARGE	2.4E-08	2.8E+01	6.4E-07
483	ACWMVEL321A	NCS-MOV-321A EXTERNAL LEAK LARGE	2.4E-08	2.8E+01	6.4E-07
484	ACWMVEL322B	NCS-MOV-322B EXTERNAL LEAK LARGE	2.4E-08	2.8E+01	6.4E-07
485	ACWMVEL322A	NCS-MOV-322A EXTERNAL LEAK LARGE	2.4E-08	2.8E+01	6.4E-07
486	ACWMVEL326A	NCS-MOV-326A EXTERNAL LEAK LARGE	2.4E-08	2.8E+01	6.4E-07
487	ACWMVEL323B	NCS-MOV-323B EXTERNAL LEAK LARGE	2.4E-08	2.8E+01	6.4E-07
488	ACWMVEL323A	NCS-MOV-323A EXTERNAL LEAK LARGE	2.4E-08	2.8E+01	6.4E-07
489	ACWMVEL324B	NCS-MOV-324B EXTERNAL LEAK LARGE	2.4E-08	2.8E+01	6.4E-07
490	ACWPNELPIPEB2	ALTERNATE CCW B-CHI PUMP DISCHARGE LINE PIPING EXTERNAL LEAK LARGE	6.0E-10	2.8E+01	1.6E-08
491	ACWPNELPIPEA2	ALTERNATE CCW A-CHI PUMP DISCHARGE LINE PIPING EXTERNAL LEAK LARGE	6.0E-10	2.8E+01	1.6E-08
492	ACWPNELPIPEA1	ALTERNATE CCW A-CHI PUMP SUCTION LINE PIPING EXTERNAL LEAK LARGE	6.0E-10	2.8E+01	1.6E-08
493	ACWPNELPIPEB1	ALTERNATE CCW B-CHI PUMP SUCTION LINE PIPING EXTERNAL LEAK LARGE	6.0E-10	2.8E+01	1.6E-08
494	EFWCF4CVOD012-13	EFS-VLV-012A,B FAIL TO OPEN (CCF)	2.3E-07	2.8E+01	6.0E-06
495	EFWCF4CVOD012-34	EFS-VLV-012A,D FAIL TO OPEN (CCF)	2.3E-07	2.7E+01	5.9E-06

Table 19.1-31 Basic Events (Hardware Failure, Human Error) RAW (Sheet 23 of 45)

Rank	Basic Event ID	Basic Event Description	Basic Event Probability	RAW	FV Importance
496	SWSCF4PMBD001-R-124	EWS-MPP-001A,C,D (ESW PUMP) FAIL TO RE-START (CCF)	1.5E-05	2.7E+01	4.0E-04
497	CWSCF4PCBD001-R-123	NCS-MPP-001A,C,D (CCW PUMP) FAIL TO RE-START (CCF)	8.4E-06	2.7E+01	2.1E-04
498	EFWCF4MVFC017-14	EFS-MOV-017C,D FAIL TO CONTROL (CCF)	5.6E-07	2.6E+01	1.4E-05
499	EFWXVEL026B	EFS-VLV-026B EXTERNAL LEAK LARGE	7.2E-08	2.5E+01	1.7E-06
500	EFWPNELTESTB	EFS C,D-EFW PUMP TEST LINE PIPING EXTERNAL LEAK LARGE	6.0E-10	2.5E+01	1.4E-08
501	EFWCF4CVOD018-23	EFS-VLV-018C,D FAIL TO OPEN (CCF)	2.3E-07	2.5E+01	5.4E-06
502	EPSCBFO52RAT-CD	EPS 52/RATC,D (BREAKER) FAIL TO OPEN (CCF)	5.0E-06	2.5E+01	1.2E-04
503	EPSCF4CBSC52RAT-34	EPS 52/RATC,D (BREAKER) SPURIOUS CLOSE (CCF)	3.4E-08	2.5E+01	8.0E-07
504	EPSCBFO52UAT-CD	EPS 52/UATC,D (BREAKER) FAIL TO OPEN (CCF)	5.0E-06	2.5E+01	1.2E-04
505	EPSCF4CBSC52UAT-34	EPS 52/UATC,D (BREAKER) SPURIOUS CLOSE (CCF)	3.4E-08	2.5E+01	8.0E-07
506	EFWXVEL013C	EFS-VLV-013C EXTERNAL LEAK LARGE	7.2E-08	2.5E+01	1.7E-06
507	EFWXVEL013B	EFS-VLV-013B EXTERNAL LEAK LARGE	7.2E-08	2.5E+01	1.7E-06
508	EFWCVEL012C	EFS-VLV-012C EXTERNAL LEAK LARGE	4.8E-08	2.5E+01	1.1E-06
509	EFWCVEL012B	EFS-VLV-012B EXTERNAL LEAK LARGE	4.8E-08	2.5E+01	1.1E-06
510	EFWCF4MVFC017-13	EFS-MOV-017B,D FAIL TO CONTROL (CCF)	5.6E-07	2.4E+01	1.3E-05
511	EFWCF4MVFC017-34	EFS-MOV-017B,C FAIL TO CONTROL (CCF)	5.6E-07	2.4E+01	1.3E-05
512	EFWXVEL026A	EFS-VLV-026A EXTERNAL LEAK LARGE	7.2E-08	2.4E+01	1.7E-06
513	EFWPNELTESTA	EFS A,B-EFW PUMP TEST LINE PIPING EXTERNAL LEAK LARGE	6.0E-10	2.4E+01	1.4E-08
514	EFWCF4CVOD018-13	EFS-VLV-018B,D FAIL TO OPEN (CCF)	2.3E-07	2.4E+01	5.2E-06
515	EFWCF4CVOD018-12	EFS-VLV-018B,C FAIL TO OPEN (CCF)	2.3E-07	2.4E+01	5.2E-06
516	EFWCVEL018C	EFS-VLV-018C EXTERNAL LEAK LARGE	4.8E-08	2.2E+01	1.0E-06
517	EFWCVEL018B	EFS-VLV-018B EXTERNAL LEAK LARGE	4.8E-08	2.2E+01	1.0E-06
518	PZRCF2MVOD117-ALL	RCS-MOV-117A,B FAIL TO OPEN (CCF)	1.3E-04	2.0E+01	2.4E-03
519	SGNBTSWCCF1	GROUP-1 APPLICATION SOFTWARE CCF	1.0E-05	2.0E+01	1.9E-04

Table 19.1-31 Basic Events (Hardware Failure, Human Error) RAW (Sheet 24 of 45)

Rank	Basic Event ID	Basic Event Description	Basic Event Probability	RAW	FV Importance
520	RWSCF4SUPR001-12	SIS-SST-001B,C (ESS/CS STRAINER) PLUG DURING OPERATION (CCF)	3.0E-06	1.9E+01	5.4E-05
521	SWSCF4PMBD001-R-134	EWS-MPP-001A,B,D (ESW PUMP) FAIL TO RE-START (CCF)	1.5E-05	1.9E+01	2.7E-04
522	CWSCF4PCBD001-R-124	NCS-MPP-001A,B,D (CCW PUMP) FAIL TO RE-START (CCF)	8.4E-06	1.9E+01	1.5E-04
523	EFWMVEL017B	EFS-MOV-017B EXTERNAL LEAK LARGE	2.4E-08	1.8E+01	4.1E-07
524	EFWMVEL014B	EFS-MOV-014B EXTERNAL LEAK LARGE	2.4E-08	1.8E+01	4.1E-07
525	EFWMVEL014C	EFS-MOV-014C EXTERNAL LEAK LARGE	2.4E-08	1.8E+01	4.1E-07
526	EFWMVEL017C	EFS-MOV-017C EXTERNAL LEAK LARGE	2.4E-08	1.8E+01	4.1E-07
527	EFWPNELSGC	EFS C-SG SUPPLY LINE PIPING EXTERNAL LEAK LARGE	6.0E-10	1.8E+01	1.0E-08
528	EFWPNELSGB	EFS B-SG SUPPLY LINE PIPING EXTERNAL LEAK LARGE	6.0E-10	1.8E+01	1.0E-08
529	EPSCF4IVFFIBC-134	CLASS-1E UPS UNIT A,B,C FAIL TO OPERATE (CCF)	5.0E-07	1.7E+01	8.2E-06
530	ACWOO02FS	(HE) FAIL TO ESTABLISH THE ALTERNATE CCWS BY FIRE PROTECTION WATER SUPPLY SYSTEM	1.1E-02	1.7E+01	1.8E-01
531	EFWMVEL019B	EFS-MOV-019B EXTERNAL LEAK LARGE	2.4E-08	1.7E+01	3.8E-07
532	EFWMVEL019C	EFS-MOV-019C EXTERNAL LEAK LARGE	2.4E-08	1.7E+01	3.8E-07
533	EPSCF4DLLRGTG-134	CLASS-1E GTG A,B,D FAIL TO RUN AFTER FIRST HOUR OF OPERATION (CCF)	2.5E-04	1.7E+01	3.9E-03
534	EPSCF4DLADGTG-124	CLASS-1E GTG A,B,D FAIL TO START (CCF)	5.2E-05	1.7E+01	8.2E-04
535	EPSCF4DLSRGTG-134	CLASS-1E GTG A,B,D FAIL TO RUN DURING FIRST HOUR OF OPERATION (CCF)	3.9E-05	1.7E+01	6.1E-04
536	EPSCF4SEFFGTG-134	CLASS-1E GTG A,B,D SEQUENCER FAIL TO OPERATE (CCF)	1.3E-05	1.7E+01	1.9E-04
537	EPSCF4CBFC52EPS-124	EPS 52/EPSA,B,D (BREAKER) FAIL TO CLOSE (CCF)	5.2E-06	1.7E+01	8.1E-05
538	EPSCF4CBSO52EPS-134	EPS 52/EPSA,B,D (BREAKER) SPURIOUS OPEN (CCF)	2.9E-08	1.7E+01	4.6E-07
539	SWSCF4PMBD001-R-234	EWS-MPP-001A,B,C (ESW PUMP) FAIL TO RE-START (CCF)	1.5E-05	1.7E+01	2.4E-04
540	CWSCF4PCBD001-R-134	NCS-MPP-001A,B,C (CCW PUMP) FAIL TO RE-START (CCF)	8.4E-06	1.6E+01	1.3E-04

Table 19.1-31 Basic Events (Hardware Failure, Human Error) RAW (Sheet 25 of 45)

Rank	Basic Event ID	Basic Event Description	Basic Event Probability	RAW	FV Importance
541	EPSCF4IVFFMVI-ALL	MOV INVERTER A1,B,C,D1 FAIL TO OPERATE FAIL TO OPERATE (CCF)	1.5E-06	1.6E+01	2.2E-05
542	EPSCF2CBSO52LL2-ALL	EPS 52/LLDA,LLDD (BREAKER) SPURIOUS OPEN (CCF)	2.8E-07	1.6E+01	4.1E-06
543	EPSCF2CBSO52LL1-ALL	EPS 52/LLAA,LLAD (BREAKER) SPURIOUS OPEN (CCF)	2.8E-07	1.6E+01	4.1E-06
544	EPSCF2CBSO52LC1-ALL	EPS 52/LCA1,D1 (BREAKER) SPURIOUS CLOSE (CCF)	2.8E-07	1.6E+01	4.1E-06
545	RTPCF4ICYRRT7001-234	SG WATER LEVEL SENSOR (NARROW RANGE) RT7001B,RT7001D,RT7001C CCF	9.1E-08	1.6E+01	1.3E-06
546	RTPCF4ICYRRT7001-245	SG WATER LEVEL SENSOR (NARROW RANGE) RT7001B,RT7001C,RT7001A CCF	9.1E-08	1.6E+01	1.3E-06
547	RTPCF4ICYRRT7001-235	SG WATER LEVEL SENSOR (NARROW RANGE) RT7001B,RT7001D,RT7001A CCF	9.1E-08	1.6E+01	1.3E-06
548	RTPCF4ICYRRT7001-345	SG WATER LEVEL SENSOR (NARROW RANGE) RT7001C,RT7001D,RT7001A CCF	9.1E-08	1.6E+01	1.3E-06
549	SWSCF4CVOD602-R-234	EWS-VLV-602A,C,D FAIL TO RE-OPEN (CCF)	5.0E-08	1.5E+01	7.1E-07
550	SWSCF4CVOD502-R-234	EWS-VLV-502A,C,D FAIL TO RE-OPEN (CCF)	5.0E-08	1.5E+01	7.1E-07
551	CWSCF4CVOD016-R-134	NCS-VLV-016A,C,D FAIL TO RE-OPEN (CCF)	5.0E-08	1.5E+01	7.1E-07
552	EPSCF2DLLRAAC-ALL	AAC A,B FAIL TO RUN AFTER FIRST HOUR OF OPERATION (CCF)	1.5E-03	1.5E+01	2.1E-02
553	EPSCF2DLADAAC-ALL	AAC A,B FAIL TO START (CCF)	3.1E-04	1.5E+01	4.3E-03
554	EPSCF2DLSRAAC-ALL	AAC A,B FAIL TO RUN DURING FIRST HOUR OF OPERATION (CCF)	2.3E-04	1.5E+01	3.3E-03
555	EPSCF2SEFFAAC-ALL	AAC A,B SEQUENCER FAIL TO OPERATE (CCF)	1.4E-04	1.5E+01	2.0E-03
556	EPSCF2CBFC52AAC2-ALL	EPS 52/AACAP,52/AACBP (BREAKER) FAIL TO CLOSE (CCF)	2.8E-05	1.5E+01	4.0E-04
557	EPSCF2CBSO5AAC2-ALL	EPS 52/AACAP,52/AACBP (BREAKER) SPURIOUS OPEN (CCF)	2.8E-07	1.5E+01	4.0E-06

Table 19.1-31 Basic Events (Hardware Failure, Human Error) RAW (Sheet 26 of 45)

Rank	Basic Event ID	Basic Event Description	Basic Event Probability	RAW	FV Importance
558	EPSCF4DLLRGTG-124	CLASS-1E GTG A,B,C FAIL TO RUN AFTER FIRST HOUR OF OPERATION (CCF)	2.5E-04	1.5E+01	3.5E-03
559	EPSCF4DLADGTG-123	CLASS-1E GTG A,B,C FAIL TO START (CCF)	5.2E-05	1.5E+01	7.3E-04
560	EPSCF4DLSRGTG-124	CLASS-1E GTG A,B,C FAIL TO RUN DURING FIRST HOUR OF OPERATION (CCF)	3.9E-05	1.5E+01	5.5E-04
561	EPSCF4SEFFGTG-124	CLASS-1E GTG A,B,C SEQUENCER FAIL TO OPERATE (CCF)	1.3E-05	1.5E+01	1.8E-04
562	EPSCF4CBFC52EPS-234	EPS 52/EPSA,B,C (BREAKER) FAIL TO CLOSE (CCF)	5.2E-06	1.5E+01	7.2E-05
563	EPSCF4CBSO52EPS-124	EPS 52/EPSA,B,C (BREAKER) SPURIOUS OPEN (CCF)	2.9E-08	1.5E+01	4.1E-07
564	EPPBTSWCCF	BO-SIGNAL (TRAIN P1,2) SOFTWARE CCF	1.0E-04	1.5E+01	1.4E-03
565	EPPBTHWCCF	BO-SIGNAL (TRAIN P1,2) HARDWARE CCF	2.1E-06	1.5E+01	3.0E-05
566	EPSCF2CBFC89AAC-ALL	EPS 89/AACA,D (SELECTER CIRCUIT) FAIL TO CLOSE (CCF)	2.8E-05	1.5E+01	3.9E-04
567	EPSCF2CBFC52AAC-ALL	EPS 52/AACA,D (BREAKER) FAIL TO CLOSE (CCF)	2.8E-05	1.5E+01	3.9E-04
568	EPSCF2CBFO52EPS-ALL	EPS 52/EPSA,D (BREAKER) FAIL TO OPEN (CCF)	2.8E-05	1.5E+01	3.9E-04
569	EPSCF2CBSC52EPS-ALL	EPS 52/EPSA,D (BREAKER) SPURIOUS CLOSE (CCF)	2.8E-07	1.5E+01	3.9E-06
570	EPSCF2CBSO52AAC-ALL	EPS 52/AACA,D (BREAKER) SPURIOUS OPEN (CCF)	2.8E-07	1.5E+01	3.9E-06
571	EPSCF2CBSO89AAC-ALL	EPS 89/AACA,D (SELECTER CIRCUIT) SPURIOUS OPEN (CCF)	2.8E-07	1.5E+01	3.9E-06
572	EPSCF4DLLRGTG-123	CLASS-1E GTG B,C,D FAIL TO RUN AFTER FIRST HOUR OF OPERATION (CCF)	2.5E-04	1.5E+01	3.4E-03
573	EPSCF4DLADGTG-234	CLASS-1E GTG B,C,D FAIL TO START (CCF)	5.2E-05	1.5E+01	7.2E-04
574	EPSCF4DLSRGTG-123	CLASS-1E GTG B,C,D FAIL TO RUN DURING FIRST HOUR OF OPERATION (CCF)	3.9E-05	1.5E+01	5.3E-04
575	EPSCF4SEFFGTG-123	CLASS-1E GTG B,C,D SEQUENCER FAIL TO OPERATE (CCF)	1.3E-05	1.5E+01	1.7E-04
576	EPSCF4CBFC52EPS-134	EPS 52/EPSB,C,D (BREAKER) FAIL TO CLOSE (CCF)	5.2E-06	1.5E+01	7.1E-05

Table 19.1-31 Basic Events (Hardware Failure, Human Error) RAW (Sheet 27 of 45)

Rank	Basic Event ID	Basic Event Description	Basic Event Probability	RAW	FV Importance
577	EPSCF4CBSO52EPS-123	EPS 52/EPSB,C,D (BREAKER) SPURIOUS OPEN (CCF)	2.9E-08	1.5E+01	4.0E-07
578	EPSOO02RDG	(HE) FAIL TO CONNECT THE ALTERNATE AC POWER SOURCE TO CLASS 1E BUS	2.1E-02	1.5E+01	2.9E-01
579	EPSBSFFMCD	D-CLASS 1E 6.9KV SWITCHGEAR FAILURE	5.8E-06	1.4E+01	7.7E-05
580	EPSCF4IVFFIBC-234	CLASS-1E UPS UNIT B,C,D FAIL TO OPERATE (CCF)	5.0E-07	1.4E+01	6.6E-06
581	HPIOO02FWBD	(HE) FAIL TO OPEN SAFETY DEPRESSURIZATION VALVE AND START SAFETY INJECTION PUMP	3.8E-03	1.2E+01	4.2E-02
582	HPICF4PMAD001-234	SIS-MPP-001A,C,D (SI PUMP) FAIL TO START (CCF)	9.5E-06	1.2E+01	1.0E-04
583	EPSBSFFDCCD	D-CLASS 1E DC SWITCHBOARD	5.8E-06	1.1E+01	5.9E-05
584	SWSCF4PMBD001-R-123	EWS-MPP-001B,C,D (ESW PUMP) FAIL TO RE-START (CCF)	1.5E-05	1.1E+01	1.5E-04
585	HPICF4PMSR001-234	SIS-MPP-001A,C,D (SI PUMP) FAIL TO RUN DURING FIRST HOUR OF OPERATION (CCF)	3.3E-06	1.1E+01	3.3E-05
586	CWSCF4PCBD001-R-234	NCS-MPP-001B,C,D (CCW PUMP) FAIL TO RE-START (CCF)	8.4E-06	1.1E+01	8.3E-05
587	HPICF4PMLR001-234	SIS-MPP-001A,C,D (SI PUMP) FAIL TO RUN AFTER FIRST HOUR OF OPERATION (CCF)	1.1E-06	9.9E+00	1.0E-05
588	SWSCF4CVOD602-R-134	EWS-VLV-602A,B,D FAIL TO RE-OPEN (CCF)	5.0E-08	9.7E+00	4.4E-07
589	SWSCF4CVOD502-R-134	EWS-VLV-502A,B,D FAIL TO RE-OPEN (CCF)	5.0E-08	9.7E+00	4.4E-07
590	CWSCF4CVOD016-R-124	NCS-VLV-016AB,D FAIL TO RE-OPEN (CCF)	5.0E-08	9.7E+00	4.4E-07
591	RWSCF4SUPR001-134	SIS-SST-001A,B,D (ESS/CS STRAINER) PLUG DURING OPERATION (CCF)	3.7E-06	9.4E+00	3.1E-05
592	HPICF4CVOD013-234	SIS-VLV-013A,C,D FAIL TO OPEN (CCF)	2.7E-07	9.0E+00	2.2E-06
593	HPICF4CVOD004-234	SIS-VLV-004A,C,D FAIL TO OPEN (CCF)	2.7E-07	9.0E+00	2.2E-06
594	HPICF4CVOD012-234	SIS-VLV-012A,C,D FAIL TO OPEN (CCF)	2.7E-07	9.0E+00	2.2E-06
595	HPICF4CVOD010-234	SIS-VLV-010A,C,D FAIL TO OPEN (CCF)	2.7E-07	9.0E+00	2.2E-06
596	HPIOO02FWBD-S	(HE) FAIL TO OPEN SAFETY DEPRESSURIZATION VALVE	2.6E-03	9.0E+00	2.1E-02
597	SWSCF2PMYR001AC-ALL	EWS-MPP-001A,C (ESW PUMP) FAIL TO RUN (CCF)	8.9E-06	8.6E+00	6.7E-05

Table 19.1-31 Basic Events (Hardware Failure, Human Error) RAW (Sheet 28 of 45)

Rank	Basic Event ID	Basic Event Description	Basic Event Probability	RAW	FV Importance
598	HPICF4PMAD001-23	SIS-MPP-001C,D (SI PUMP) FAIL TO START (CCF)	2.2E-05	8.5E+00	1.6E-04
599	EPSCF4CBSO72AU-234	EPS 72/AUB,C,D (BREAKER) SPURIOUS OPEN (CCF)	2.9E-08	7.8E+00	2.0E-07
600	EPSCF4CBSO52UA-234	EPS 52/UAB,C,D (BREAKER) SPURIOUS OPEN (CCF)	2.9E-08	7.8E+00	2.0E-07
601	EPSCF4CBSO52UA-134	EPS 52/UAA,B,C (BREAKER) SPURIOUS OPEN (CCF)	2.9E-08	7.8E+00	2.0E-07
602	EPSCF4CBSO72AU-134	EPS 72/AUA,B,C (BREAKER) SPURIOUS OPEN (CCF)	2.9E-08	7.8E+00	2.0E-07
603	EPSCBFO52RAT-AC	EPS 52/RATA,C (BREAKER) FAIL TO OPEN (CCF)	5.0E-06	7.8E+00	3.4E-05
604	EPSCBFO52UAT-AC	EPS 52/UATA,C (BREAKER) FAIL TO OPEN (CCF)	5.0E-06	7.8E+00	3.4E-05
605	EPSCF4CBSC52RAT-13	EPS 52/RATA,C (BREAKER) SPURIOUS CLOSE (CCF)	3.4E-08	7.8E+00	2.3E-07
606	EPSCF4CBSC52UAT-13	EPS 52/UATA,C (BREAKER) SPURIOUS CLOSE (CCF)	3.4E-08	7.8E+00	2.3E-07
607	HPICF4PMSR001-23	SIS-MPP-001C,D (SI PUMP) FAIL TO RUN DURING FIRST HOUR OF OPERATION (CCF)	3.6E-06	7.7E+00	2.4E-05
608	EPSCF4IVFFIBC-13	CLASS-1E UPS UNIT A,B FAIL TO OPERATE (CCF)	1.0E-06	7.1E+00	6.1E-06
609	HPICF4PMLR001-23	SIS-MPP-001C,D (SI PUMP) FAIL TO RUN AFTER FIRST HOUR OF OPERATION (CCF)	1.2E-06	7.0E+00	7.4E-06
610	RSSCF4PMAD001-123	RHS-MPP-001A,C,D (CS/RHR PUMP) FAIL TO START (CCF)	6.3E-06	6.8E+00	3.6E-05
611	SWSCF2PMYR001BD-ALL	EWS-MPP-001B,D (ESW PUMP) FAIL TO RUN (CCF)	8.9E-06	6.7E+00	5.1E-05
612	CWSCF2PCYR001AC-ALL	NCS-MPP-001A,C (CCW PUMP) FAIL TO RUN (CCF)	5.0E-06	6.7E+00	2.8E-05
613	CWSCF4CVOD016-R-123	NCS-VLV-016AB,C FAIL TO RE-OPEN (CCF)	5.0E-08	6.6E+00	2.8E-07
614	SWSCF4CVOD602-R-124	EWS-VLV-602A,B,C FAIL TO RE-OPEN (CCF)	5.0E-08	6.6E+00	2.8E-07
615	SWSCF4CVOD502-R-124	EWS-VLV-502A,B,C FAIL TO RE-OPEN (CCF)	5.0E-08	6.6E+00	2.8E-07
616	RSSCF4PMAD001-134	RHS-MPP-001A,B,C (CS/RHR PUMP) FAIL TO START (CCF)	6.3E-06	6.2E+00	3.3E-05
617	SGNOO04ICVR12	(HE) MISCALIBRATION OF C/V PRESSURE SENSORS A,B,C,D	6.7E-05	6.2E+00	3.4E-04
618	SGNCF4ICVR0012-ALL	CONTAINMENT PRESSURE SENSOR CCF	1.3E-06	6.2E+00	6.6E-06
619	SWSCF2PMBD001BD-ALL	EWS-MPP-001B,D (ESW PUMP) FAIL TO START (CCF)	1.4E-04	6.1E+00	7.0E-04

Table 19.1-31 Basic Events (Hardware Failure, Human Error) RAW (Sheet 29 of 45)

Rank	Basic Event ID	Basic Event Description	Basic Event Probability	RAW	FV Importance
620	RSSCF4PMSR001-234	RHS-MPP-001A,C,D (CS/RHR PUMP) FAIL TO RUN DURING FIRST HOUR OF OPERATION (CCF)	1.7E-06	6.0E+00	8.4E-06
621	EPSCF4IVFFIBC-12	CLASS-1E UPS UNIT A,D FAIL TO OPERATE (CCF)	1.0E-06	6.0E+00	5.0E-06
622	EPSCF4IVFFIBC-24	CLASS-1E UPS UNIT C,D FAIL TO OPERATE (CCF)	1.0E-06	6.0E+00	5.0E-06
623	SWSSTPRST001C	EWS-SST-001C (STRAINER) PLUG	1.7E-04	5.8E+00	8.1E-04
624	SWSMVPR503C	EWS-MOV-503C PLUG	2.4E-06	5.8E+00	1.2E-05
625	SWSCVPR502C	EWS-VLV-502C PLUG	2.4E-06	5.8E+00	1.2E-05
626	SWSXVPR508C	EWS-VLV-508C PLUG	2.4E-06	5.8E+00	1.2E-05
627	SWSXVPR506C	EWS-VLV-506C PLUG	2.4E-06	5.8E+00	1.2E-05
628	SWSMVCM503C	EWS-MOV-503C SPURIOUS CLOSE	9.6E-07	5.8E+00	4.7E-06
629	SWSXVEL508C	EWS-VLV-508C EXTERNAL LEAK LARGE	7.2E-08	5.8E+00	3.5E-07
630	SWSXVEL509C	EWS-VLV-509C EXTERNAL LEAK LARGE	7.2E-08	5.8E+00	3.5E-07
631	SWSXVEL507C	EWS-VLV-507C EXTERNAL LEAK LARGE	7.2E-08	5.8E+00	3.5E-07
632	SWSXVEL506C	EWS-VLV-506C EXTERNAL LEAK LARGE	7.2E-08	5.8E+00	3.5E-07
633	SWSXVEL701C	EWS-VLV-701C EXTERNAL LEAK LARGE	7.2E-08	5.8E+00	3.5E-07
634	SWSCVEL502C	EWS-VLV-502C EXTERNAL LEAK LARGE	4.8E-08	5.8E+00	2.3E-07
635	SWSMVEL503C	EWS-MOV-503C EXTERNAL LEAK LARGE	2.4E-08	5.8E+00	1.2E-07
636	SWSPEELSWPC1	EWS C-ESW PUMP DISCHARGE LINE PIPING EXTERNAL LEAK LARGE	3.6E-09	5.8E+00	1.7E-08
637	RSSCF4MVOD145-234	NCS-MOV-145A,C,D FAIL TO OPEN (CCF)	1.5E-06	5.7E+00	6.9E-06
638	SWSPMYR001C	EWS-MPP-001C (C-ESW PUMP) FAIL TO RUN	1.1E-04	5.7E+00	5.3E-04
639	HPICF4CVOD010-23	SIS-VLV-010C,D FAIL TO OPEN (CCF)	1.6E-07	5.7E+00	7.6E-07
640	HPICF4CVOD013-23	SIS-VLV-013C,D FAIL TO OPEN (CCF)	1.6E-07	5.7E+00	7.6E-07
641	HPICF4CVOD012-23	SIS-VLV-012C,D FAIL TO OPEN (CCF)	1.6E-07	5.7E+00	7.6E-07
642	HPICF4CVOD004-23	SIS-VLV-004C,D FAIL TO OPEN (CCF)	1.6E-07	5.7E+00	7.6E-07

Table 19.1-31 Basic Events (Hardware Failure, Human Error) RAW (Sheet 30 of 45)

Rank	Basic Event ID	Basic Event Description	Basic Event Probability	RAW	FV Importance
643	RSSCF4PMSR001-124	RHS-MPP-001A,B,C (CS/RHR PUMP) FAIL TO RUN DURING FIRST HOUR OF OPERATION (CCF)	1.7E-06	5.6E+00	7.6E-06
644	SWSORPR002C	EWS-SRO-002C (ORIFICE) PLUG	2.4E-05	5.6E+00	1.1E-04
645	SWSFMPR072	EWS-FT-072 (FLOW METER) PLUG	2.4E-05	5.6E+00	1.1E-04
646	SWSXVPR601C	EWS-VLV-601C PLUG	2.4E-06	5.6E+00	1.1E-05
647	SWSCVPR602C	EWS-VLV-602C PLUG	2.4E-06	5.6E+00	1.1E-05
648	SWSXVEL601C	EWS-VLV-601C EXTERNAL LEAK LARGE	7.2E-08	5.6E+00	3.3E-07
649	SWSCVEL602C	EWS-VLV-602C EXTERNAL LEAK LARGE	4.8E-08	5.6E+00	2.2E-07
650	SWSPEELSWSC2	EWS C-ESW PUMP COOLING LINE PIPING EXTERNAL LEAK LARGE	3.6E-09	5.6E+00	1.6E-08
651	MSPSVCD510A	MSS-SRV-510A FAIL TO RE-CLOSE	7.0E-05	5.5E+00	3.2E-04
652	MSPSVCD509A	MSS-SRV-509A FAIL TO RE-CLOSE	7.0E-05	5.5E+00	3.2E-04
653	MSPSVOM509A	MSS-SRV-509A SPURIOUS OPEN	4.8E-06	5.5E+00	2.2E-05
654	MSPSVOM510A	MSS-SRV-510A SPURIOUS OPEN	4.8E-06	5.5E+00	2.2E-05
655	EPSTRFF001D	D-CLASS 1E 6.9KV-480V CLASS 1E STATION SERVICE TRANSFORMER FAIL TO OPERATE	8.2E-06	5.5E+00	3.6E-05
656	EPSBSFFLCD	D-CLASS 1E 480V LOAD CENTER FAILURE	5.8E-06	5.5E+00	2.6E-05
657	EPSCBFO52UAT-BD	EPS 52/UATB,D (BREAKER) FAIL TO OPEN (CCF)	5.0E-06	5.5E+00	2.2E-05
658	EPSCBFO52RAT-BD	EPS 52/RATB,D (BREAKER) FAIL TO OPEN (CCF)	5.0E-06	5.5E+00	2.2E-05
659	EPSCF4CBSC52UAT-24	EPS 52/UATB,D (BREAKER) SPURIOUS CLOSE (CCF)	3.4E-08	5.5E+00	1.5E-07
660	EPSCF4CBSC52RAT-24	EPS 52/RATB,D (BREAKER) SPURIOUS CLOSE (CCF)	3.4E-08	5.5E+00	1.5E-07
661	SGNCF4ICVR0012-234	CONTAINMENT PRESSURE SENSOR P10012B,P10012C,P10012D CCF	4.3E-07	5.3E+00	1.8E-06
662	SGNCF4ICVR0012-123	CONTAINMENT PRESSURE SENSOR P10012A,P10012B,P10012C CCF	4.3E-07	5.3E+00	1.8E-06

Table 19.1-31 Basic Events (Hardware Failure, Human Error) RAW (Sheet 31 of 45)

Rank	Basic Event ID	Basic Event Description	Basic Event Probability	RAW	FV Importance
663	SGNCF4ICVR0012-124	CONTAINMENT PRESSURE SENSOR P10012A,P10012B,P10012D CCF	4.3E-07	5.3E+00	1.8E-06
664	SGNCF4ICVR0012-134	CONTAINMENT PRESSURE SENSOR P10012A,P10012C,P10012D CCF	4.3E-07	5.3E+00	1.8E-06
665	RSSCF4MVOD004-ALL	CSS-MOV-004A,B,C,D FAIL TO OPEN (CCF)	8.4E-05	5.3E+00	3.6E-04
666	RSSCF4MVOD145-124	NCS-MOV-145A,B,C FAIL TO OPEN (CCF)	1.5E-06	5.2E+00	6.1E-06
667	EPSBSFFMCCD	D-CLASS 1E 480V MCC FAILURE	5.8E-06	5.2E+00	2.4E-05
668	SWSCF4PMBD001-R-23	EWS-MPP-001B,C (ESW PUMP) FAIL TO RE-START (CCF)	7.1E-05	5.0E+00	2.9E-04
669	EPSBSFFDCCA	A-CLASS 1E DC SWITCHBOARD	5.8E-06	5.0E+00	2.3E-05
670	CWSCF4PCBD001-R-34	NCS-MPP-001B,C (CCW PUMP) FAIL TO RE-START (CCF)	3.9E-05	5.0E+00	1.6E-04
671	EPSCBSO52STLD	EPS 52/STLD (BREAKER) SPURIOUS OPEN	3.0E-06	5.0E+00	1.2E-05
672	EPSCBSO52LCD	EPS 52/LCD (BREAKER) SPURIOUS OPEN	3.0E-06	5.0E+00	1.2E-05
673	EPSCBSO52STHD	EPS 52/STHD (BREAKER) SPURIOUS OPEN	3.0E-06	5.0E+00	1.2E-05
674	ACCORPR006D	SIS-SRO-006D (ORIFICE) PLUG	2.4E-05	5.0E+00	9.5E-05
675	ACCORPR006B	SIS-SRO-006B (ORIFICE) PLUG	2.4E-05	5.0E+00	9.5E-05
676	ACCORPR006C	SIS-SRO-006C (ORIFICE) PLUG	2.4E-05	5.0E+00	9.5E-05
677	ACCCVOD103B	SIS-VLV-103B FAIL TO OPEN	9.7E-06	5.0E+00	3.8E-05
678	ACCCVOD103C	SIS-VLV-103C FAIL TO OPEN	9.7E-06	5.0E+00	3.8E-05
679	ACCCVOD103D	SIS-VLV-103D FAIL TO OPEN	9.7E-06	5.0E+00	3.8E-05
680	ACCCVOD102B	SIS-VLV-102B FAIL TO OPEN	9.7E-06	5.0E+00	3.8E-05
681	ACCCVOD102C	SIS-VLV-102C FAIL TO OPEN	9.7E-06	5.0E+00	3.8E-05
682	ACCCVOD102D	SIS-VLV-102D FAIL TO OPEN	9.7E-06	5.0E+00	3.8E-05
683	ACCCVPR103D	SIS-VLV-103D PLUG	2.4E-06	5.0E+00	9.5E-06
684	ACCCVPR102D	SIS-VLV-102D PLUG	2.4E-06	5.0E+00	9.5E-06
685	ACCMVPR101D	SIS-MOV-101D PLUG	2.4E-06	5.0E+00	9.5E-06
686	ACCMVPR101C	SIS-MOV-101C PLUG	2.4E-06	5.0E+00	9.5E-06

Table 19.1-31 Basic Events (Hardware Failure, Human Error) RAW (Sheet 32 of 45)

Rank	Basic Event ID	Basic Event Description	Basic Event Probability	RAW	FV Importance
687	ACCCVPR103B	SIS-VLV-103B PLUG	2.4E-06	5.0E+00	9.5E-06
688	ACCCVPR103C	SIS-VLV-103C PLUG	2.4E-06	5.0E+00	9.5E-06
689	ACCCVPR102C	SIS-VLV-102C PLUG	2.4E-06	5.0E+00	9.5E-06
690	ACCMVPR101B	SIS-MOV-101B PLUG	2.4E-06	5.0E+00	9.5E-06
691	ACCCVPR102B	SIS-VLV-102B PLUG	2.4E-06	5.0E+00	9.5E-06
692	ACCCVEL102C	SIS-VLV-102C EXTERNAL LEAK LARGE	4.8E-08	5.0E+00	1.9E-07
693	ACCCVEL102D	SIS-VLV-102D EXTERNAL LEAK LARGE	4.8E-08	5.0E+00	1.9E-07
694	ACCCVEL102B	SIS-VLV-102B EXTERNAL LEAK LARGE	4.8E-08	5.0E+00	1.9E-07
695	ACCMVEL101C	SIS-MOV-101C EXTERNAL LEAK LARGE	2.4E-08	5.0E+00	9.5E-08
696	ACCMVEL101B	SIS-MOV-101B EXTERNAL LEAK LARGE	2.4E-08	5.0E+00	9.5E-08
697	ACCMVEL101D	SIS-MOV-101D EXTERNAL LEAK LARGE	2.4E-08	5.0E+00	9.5E-08
698	ACCPNELINJC	SIS C-ACC INJECTION LINE PIPING EXTERNAL LEAK LARGE	6.0E-10	5.0E+00	2.4E-09
699	ACCPNELINJB	SIS B-ACC INJECTION LINE PIPING EXTERNAL LEAK LARGE	6.0E-10	5.0E+00	2.4E-09
700	ACCPNELINJD	SIS D-ACC INJECTION LINE PIPING EXTERNAL LEAK LARGE	6.0E-10	5.0E+00	2.4E-09
701	RSSCF4PMLR001-234	RHS-MPP-001A,C,D (CS/RHR PUMP) FAIL TO RUN AFTER FIRST HOUR OF OPERATION (CCF)	5.8E-07	5.0E+00	2.3E-06
702	ACCCF4CVOD103-23	SIS-VLV-103B,C FAIL TO OPEN (CCF)	1.6E-07	4.9E+00	6.3E-07
703	ACCCF4CVOD103-13	SIS-VLV-103A,C FAIL TO OPEN (CCF)	1.6E-07	4.9E+00	6.3E-07
704	ACCCF4CVOD102-12	SIS-VLV-102A,B FAIL TO OPEN (CCF)	1.6E-07	4.9E+00	6.3E-07
705	ACCCF4CVOD102-13	SIS-VLV-102A,C FAIL TO OPEN (CCF)	1.6E-07	4.9E+00	6.3E-07
706	ACCCF4CVOD102-14	SIS-VLV-102A,D FAIL TO OPEN (CCF)	1.6E-07	4.9E+00	6.3E-07
707	ACCCF4CVOD103-34	SIS-VLV-103C,D FAIL TO OPEN (CCF)	1.6E-07	4.9E+00	6.3E-07
708	ACCCVEL103D	SIS-VLV-103D EXTERNAL LEAK LARGE	4.8E-08	4.9E+00	1.9E-07
709	RSSCVEL028D	RHS-VLV-028D EXTERNAL LEAK LARGE	4.8E-08	4.9E+00	1.9E-07
710	RSSCVEL028B	RHS-VLV-028B EXTERNAL LEAK LARGE	4.8E-08	4.9E+00	1.9E-07
711	ACCCVEL103B	SIS-VLV-103B EXTERNAL LEAK LARGE	4.8E-08	4.9E+00	1.9E-07

Table 19.1-31 Basic Events (Hardware Failure, Human Error) RAW (Sheet 33 of 45)

Rank	Basic Event ID	Basic Event Description	Basic Event Probability	RAW	FV Importance
712	ACCCVEL103C	SIS-VLV-103C EXTERNAL LEAK LARGE	4.8E-08	4.9E+00	1.9E-07
713	RSSCVEL028C	RHS-VLV-028C EXTERNAL LEAK LARGE	4.8E-08	4.9E+00	1.9E-07
714	EPSBSFFMVCA1	A-CLASS 1E MOV 480V MCC1 FAILURE	5.8E-06	4.6E+00	2.1E-05
715	EPSCBFO52UAT-AB	EPS 52/UATA,B (BREAKER) FAIL TO OPEN (CCF)	5.0E-06	4.6E+00	1.8E-05
716	EPSCBFO52RAT-AB	EPS 52/RATA,B (BREAKER) FAIL TO OPEN (CCF)	5.0E-06	4.6E+00	1.8E-05
717	EPSCF4CBSC52UAT-12	EPS 52/UATA,B (BREAKER) SPURIOUS CLOSE (CCF)	3.4E-08	4.6E+00	1.2E-07
718	EPSCF4CBSC52RAT-12	EPS 52/RATA,B (BREAKER) SPURIOUS CLOSE (CCF)	3.4E-08	4.6E+00	1.2E-07
719	EFWPTAD001A	EFS-MPP-001A (A-EFW PUMP) FAIL TO START	6.5E-03	4.4E+00	2.2E-02
720	EFWPTSR001A	EFS-MPP-001A (A-EFW PUMP) FAIL TO RUN DURING FIRST HOUR OF OPERATION	2.4E-03	4.4E+00	8.1E-03
721	EFWPTLR001A	EFS-MPP-001A (A-EFW PUMP) FAIL TO RUN AFTER FIRST HOUR OF OPERATION	1.5E-03	4.4E+00	5.2E-03
722	EFWPTEL001A	EFS-MPP-001A (A-EFW PUMP) EXTERNAL LEAK LARGE	2.2E-07	4.4E+00	7.3E-07
723	EFWMVOD103A	EFS-MOV-103A FAIL TO OPEN	9.6E-04	4.3E+00	3.2E-03
724	EPSCF4DLLRGTG-23	CLASS-1E GTG C,D FAIL TO RUN AFTER FIRST HOUR OF OPERATION (CCF)	2.5E-04	4.2E+00	8.2E-04
725	EPSCF4DLADGTG-34	CLASS-1E GTG C,D FAIL TO START (CCF)	4.3E-05	4.2E+00	1.4E-04
726	EPSCF4DLSRGTG-23	CLASS-1E GTG C,D FAIL TO RUN DURING FIRST HOUR OF OPERATION (CCF)	4.0E-05	4.2E+00	1.3E-04
727	EPSCF4SEFFGTG-23	CLASS-1E GTG C,D SEQUENCER FAIL TO OPERATE (CCF)	2.5E-05	4.2E+00	8.1E-05
728	EPSCF4CBFC52EPS-13	EPS 52/EPS C,D (BREAKER) FAIL TO CLOSE (CCF)	5.0E-06	4.2E+00	1.6E-05
729	EPSCF4CBSO52EPS-23	EPS 52/EPSC,D (BREAKER) SPURIOUS OPEN (CCF)	3.4E-08	4.2E+00	1.1E-07
730	RSSCF4PMLR001-124	RHS-MPP-001A,B,C (CS/RHR PUMP) FAIL TO RUN AFTER FIRST HOUR OF OPERATION (CCF)	5.8E-07	4.2E+00	1.9E-06
731	EFWCF2PMAD001BC-ALL	EFS-MPP-001B,C (EFW PUMP) FAIL TO START (CCF)	2.2E-04	4.2E+00	7.0E-04

Table 19.1-31 Basic Events (Hardware Failure, Human Error) RAW (Sheet 34 of 45)

Rank	Basic Event ID	Basic Event Description	Basic Event Probability	RAW	FV Importance
732	HVACF2AHSR401-ALL	VRS-MAH-401B,C (EFW PUMP AIR HANDLING UNIT) FAIL TO RUN DURING FIRST HOUR OF OPERATION (CCF)	1.2E-04	4.2E+00	3.7E-04
733	VCWCF2CHYR001-ALL	VWS-MEQ-001B,C (ESSENTIAL CHILLER UNIT) FAIL TO RUN (CCF)	1.0E-04	4.2E+00	3.2E-04
734	SWSCF2CVOD502BD-ALL	EWS-VLV-502B,D FAIL TO OPEN (CCF)	5.6E-07	4.1E+00	1.8E-06
735	SWSCF2CVOD602BD-ALL	EWS-VLV-602B,D FAIL TO OPEN (CCF)	5.6E-07	4.1E+00	1.8E-06
736	RTPCF4ICVRRT6001-ALL	PRESSURIZER PRESSURE SENSOR CCF	1.1E-06	4.1E+00	3.4E-06
737	HVACF2AHAD401-ALL	VRS-MAH-401B,C (EFW PUMP AIR HANDLING UNIT) FAIL TO START (CCF)	3.8E-05	4.1E+00	1.2E-04
738	HPICF4PMAD001-124	SIS-MPP-001A,B,C(SI PUMP) FAIL TO START (CCF)	9.5E-06	4.1E+00	2.9E-05
739	EFWOO01006AB	(HE) FAIL TO CHANGEOVER EFW PIT	1.7E-02	4.0E+00	5.2E-02
740	RSSCF4CVOD004-234	RHS-VLV-004A,C,D FAIL TO OPEN (CCF)	2.2E-07	4.0E+00	6.7E-07
741	RSSCF4RHPR001-234	RHS-MHX-001A,C,D (CS/RHR HX) PLUG / FOUL (CCF)	6.4E-08	4.0E+00	1.9E-07
742	OPSLOOP	CONSEQUENTIAL LOOP GIVEN A REACTOR TRIP	5.3E-03	4.0E+00	1.6E-02
743	EPSBSFFMCC	C-CLASS 1E 6.9KV SWITCHGEAR FAILURE	5.8E-06	4.0E+00	1.7E-05
744	EFWTMTA001A	EFS-MPP-001A (A-EFW PUMP) TEST & MAINTENANCE	5.0E-03	4.0E+00	1.5E-02
745	EFWCF2PMSR001BC-ALL	EFS-MPP-001B,C (EFW PUMP) FAIL TO RUN DURING FIRST HOUR OF OPERATION (CCF)	1.7E-05	4.0E+00	5.1E-05
746	RTPDASF	DAS FAILURE	1.0E-02	4.0E+00	3.0E-02
747	RSSCF4CVOD005-ALL	CSS-VLV-005A,B,C,D FAIL TO OPEN (CCF)	4.3E-07	3.9E+00	1.2E-06
748	EPSBSFFDCCC	C-CLASS 1E DC SWITCHBOARD	5.8E-06	3.9E+00	1.7E-05
749	CWSCF4MVCD020-ALL	NCS-MOV-020A,B,C,D FAIL TO CLOSE (CCF)	1.3E-05	3.8E+00	3.5E-05
750	CWSCF4MVCD007-ALL	NCS-MOV-007A,B,C,D FAIL TO CLOSE (CCF)	1.3E-05	3.8E+00	3.5E-05
751	EFWCVOD012A	EFS-VLV-012A FAIL TO OPEN	9.5E-06	3.8E+00	2.6E-05
752	EFWXVPR013A	EFS-VLV-013A PLUG	2.4E-06	3.8E+00	6.6E-06
753	EFWCVPR012A	EFS-VLV-012A PLUG	2.4E-06	3.8E+00	6.6E-06

Table 19.1-31 Basic Events (Hardware Failure, Human Error) RAW (Sheet 35 of 45)

Rank	Basic Event ID	Basic Event Description	Basic Event Probability	RAW	FV Importance
754	EFWXVIL023A	EFS-VLV-023A INTERNAL LEAK LARGE	1.1E-05	3.8E+00	2.9E-05
755	EFWXVEL023A	EFS-VLV-023A EXTERNAL LEAK LARGE	7.2E-08	3.8E+00	2.0E-07
756	EFWXVEL021A	EFS-VLV-021A EXTERNAL LEAK LARGE	7.2E-08	3.8E+00	2.0E-07
757	EFWCVEL022A	EFS-VLV-022A EXTERNAL LEAK LARGE	4.8E-08	3.8E+00	1.3E-07
758	EFWCVEL020A	EFS-VLV-020A EXTERNAL LEAK LARGE	4.8E-08	3.8E+00	1.3E-07
759	HPICF4PMSR001-124	SIS-MPP-001A,B,C (SI PUMP) FAIL TO RUN DURING FIRST HOUR OF OPERATION (CCF)	3.3E-06	3.8E+00	9.0E-06
760	EFWCF2PMLR001BC-ALL	EFS-MPP-001B,C (EFW PUMP) FAIL TO RUN AFTER FIRST HOUR OF OPERATION (CCF)	5.9E-06	3.7E+00	1.6E-05
761	VCWCF2PMYR001-ALL	VWS-MPP-001B,C (ESSENTIAL CHILLED WATER PUMP) FAIL TO RUN (CCF)	5.6E-06	3.7E+00	1.5E-05
762	HVACF2AHLR401-ALL	VRS-MAH-401B,C (EFW PUMP AIR HANDLING UNIT) FAIL TO RUN AFTER FIRST HOUR OF OPERATION (CCF)	4.3E-06	3.7E+00	1.2E-05
763	EPSCF4DLLRGTG-34	CLASS-1E GTG A,D FAIL TO RUN AFTER FIRST HOUR OF OPERATION (CCF)	2.5E-04	3.6E+00	6.5E-04
764	EPSCF4DLADGTG-14	CLASS-1E GTG A,D FAIL TO START (CCF)	4.3E-05	3.6E+00	1.1E-04
765	EPSCF4DLSRGTG-34	CLASS-1E GTG A,D FAIL TO RUN DURING FIRST HOUR OF OPERATION (CCF)	4.0E-05	3.6E+00	1.0E-04
766	EPSCF4SEFFGTG-34	CLASS-1E GTG A,D SEQUENCER FAIL TO OPERATE (CCF)	2.5E-05	3.6E+00	6.4E-05
767	EPSCF4CBFC52EPS-12	EPS 52/EPS A,D (BREAKER) FAIL TO CLOSE (CCF)	5.0E-06	3.6E+00	1.3E-05
768	EPSCF4CBSO52EPS-34	EPS 52/EPSA,D (BREAKER) SPURIOUS OPEN (CCF)	3.4E-08	3.6E+00	8.6E-08
769	SWSCF4PMBD001-R-14	EWS-MPP-001A,D (ESW PUMP) FAIL TO RE-START (CCF)	7.1E-05	3.5E+00	1.8E-04
770	HPICF4PMLR001-124	SIS-MPP-001A,B,C (SI PUMP) FAIL TO RUN AFTER FIRST HOUR OF OPERATION (CCF)	1.1E-06	3.5E+00	2.8E-06
771	CWSCF4PCBD001-R-12	NCS-MPP-001A,D (CCW PUMP) FAIL TO RE-START (CCF)	3.9E-05	3.5E+00	9.7E-05
772	SWSRIEL001C	NCS-MHX-001C (C-CCW HX) TUBE EXTERNAL LEAK LARGE	7.2E-07	3.4E+00	1.7E-06

Table 19.1-31 Basic Events (Hardware Failure, Human Error) RAW (Sheet 36 of 45)

Rank	Basic Event ID	Basic Event Description	Basic Event Probability	RAW	FV Importance
773	SWSXVEL511C	EWS-VLV-511C EXTERNAL LEAK LARGE	7.2E-08	3.4E+00	1.7E-07
774	SWSXVEL514C	EWS-VLV-514C EXTERNAL LEAK LARGE	7.2E-08	3.4E+00	1.7E-07
775	SWSPEELSWSC3	EWS C-CCW HX COOLING LINE PIPING EXTERNAL LEAK LARGE	3.6E-09	3.4E+00	8.7E-09
776	EPSCF4IVFFIBC-14	CLASS-1E UPS UNIT A,C FAIL TO OPERATE (CCF)	1.0E-06	3.4E+00	2.4E-06
777	EFWMVPR103A	EFS-MOV-103A PLUG	2.4E-06	3.4E+00	5.8E-06
778	EFWMVCM103A	EFS-MOV-103A SPURIOUS CLOSE	9.6E-07	3.4E+00	2.3E-06
779	EFWMVEL103A	EFS-MOV-103A EXTERNAL LEAK LARGE	2.4E-08	3.4E+00	5.8E-08
780	EFWPNELSTA	EFS A-T/D EFW PUMP STEAM SUPPLY LINE PIPING EXTERNAL LEAK LARGE	6.0E-10	3.4E+00	1.4E-09
781	EFWXVPR009A	EFS-VLV-009A PLUG	2.4E-06	3.4E+00	5.7E-06
782	RSSCF4CVOD004-124	RHS-VLV-004A,B,C FAIL TO OPEN (CCF)	2.2E-07	3.4E+00	5.2E-07
783	RSSCF4RHPR001-124	RHS-MHX-001A,B,C (CS/RHR HX) PLUG / FOUL (CCF)	6.4E-08	3.4E+00	1.5E-07
784	MSROO02515A	(HE) FAIL TO CLOSE MSS-SMV-515A	2.6E-03	3.3E+00	6.0E-03
785	HPICF4CVOD012-124	SIS-VLV-012A,B,C FAIL TO OPEN (CCF)	2.7E-07	3.3E+00	6.3E-07
786	HPICF4CVOD013-124	SIS-VLV-013A,B,C FAIL TO OPEN (CCF)	2.7E-07	3.3E+00	6.3E-07
787	HPICF4CVOD010-124	SIS-VLV-010A,B,C FAIL TO OPEN (CCF)	2.7E-07	3.3E+00	6.3E-07
788	HPICF4CVOD004-124	SIS-VLV-004A,B,C FAIL TO OPEN (CCF)	2.7E-07	3.3E+00	6.3E-07
789	RSSCF4PMAD001-124	RHS-MPP-001B,C,D (CS/RHR PUMP) FAIL TO START (CCF)	6.3E-06	3.3E+00	1.5E-05
790	EPSCF4DLLRGTG-12	CLASS-1E GTG B,C FAIL TO RUN AFTER FIRST HOUR OF OPERATION (CCF)	2.5E-04	3.3E+00	5.8E-04
791	EPSCF4DLADGTG-23	CLASS-1E GTG B,C FAIL TO START (CCF)	4.3E-05	3.3E+00	9.8E-05
792	EPSCF4DLSRGTG-12	CLASS-1E GTG B,C FAIL TO RUN DURING FIRST HOUR OF OPERATION (CCF)	4.0E-05	3.3E+00	9.2E-05
793	EPSCF4SEFFGTG-12	CLASS-1E GTG?B,C SEQUENCER FAIL TO OPERATE (CCF)	2.5E-05	3.3E+00	5.8E-05
794	EPSCF4CBFC52EPS-34	EPS 52/EPSB,C (BREAKER) FAIL TO CLOSE (CCF)	5.0E-06	3.3E+00	1.1E-05

Table 19.1-31 Basic Events (Hardware Failure, Human Error) RAW (Sheet 37 of 45)

Rank	Basic Event ID	Basic Event Description	Basic Event Probability	RAW	FV Importance
795	EPSCBFO52UAT-BC	EPS 52/UATB,C (BREAKER) FAIL TO OPEN (CCF)	5.0E-06	3.3E+00	1.1E-05
796	EPSCF4CBSC52UAT-23	EPS 52/UATB,C (BREAKER) SPURIOUS CLOSE (CCF)	3.4E-08	3.3E+00	7.7E-08
797	EPSCF4CBSO52EPS-12	EPS 52/EPSB,C (BREAKER) SPURIOUS OPEN (CCF)	3.4E-08	3.3E+00	7.7E-08
798	RWSCF4SUPR001-24	SIS-SST-001A,C (ESS/CS STRAINER) PLUG DURING OPERATION (CCF)	3.0E-06	3.3E+00	6.9E-06
799	HPICF4PMAD001-134	SIS-MPP-001A,B,D (SI PUMP) FAIL TO START (CCF)	9.5E-06	3.3E+00	2.1E-05
800	EPSCF4DLLRGTG-24	CLASS-1E GTG A,C FAIL TO RUN AFTER FIRST HOUR OF OPERATION (CCF)	2.5E-04	3.2E+00	5.7E-04
801	EPSCF4DLADGTG-13	CLASS-1E GTG A,C FAIL TO START (CCF)	4.3E-05	3.2E+00	9.5E-05
802	EPSCF4DLSRGTG-24	CLASS-1E GTG A,C FAIL TO RUN DURING FIRST HOUR OF OPERATION (CCF)	4.0E-05	3.2E+00	8.9E-05
803	EPSCF4SEFFGTG-24	CLASS-1E GTG A,C SEQUENCER FAIL TO OPERATE (CCF)	2.5E-05	3.2E+00	5.6E-05
804	EPSCF4CBFC52EPS-23	EPS 52/EPSA,C (BREAKER) FAIL TO CLOSE (CCF)	5.0E-06	3.2E+00	1.1E-05
805	EPSCF4CBSO52EPS-24	EPS 52/EPSA,C (BREAKER) SPURIOUS OPEN (CCF)	3.4E-08	3.2E+00	7.5E-08
806	EPSBSFFMVCD	D-CLASS 1E MOV 480V MCC1 FAILURE	5.8E-06	3.2E+00	1.3E-05
807	EPSCF4IVFFIBC-34	CLASS-1E UPS UNIT B,C FAIL TO OPERATE (CCF)	1.0E-06	3.2E+00	2.2E-06
808	EPSCBFO52UAT-D	EPS 52/UATD (BREAKER) FAIL TO OPEN	3.5E-04	3.1E+00	7.3E-04
809	EPSCBFO52RAT-D	EPS 52/RATD (BREAKER) FAIL TO OPEN	3.5E-04	3.1E+00	7.3E-04
810	EPSCBSC52UATD	EPS 52/UATD (BREAKER) SPURIOUS CLOSE	3.0E-06	3.1E+00	6.3E-06
811	EPSCBSC52RATD	EPS 52/RATD (BREAKER) SPURIOUS CLOSE	3.0E-06	3.1E+00	6.3E-06
812	EFWXVOD006B	EFS-VLV-006B FAIL TO OPEN	7.0E-04	3.1E+00	1.5E-03
813	EFWXVCD007B	EFS-VLV-007B FAIL TO CLOSE	7.0E-04	3.1E+00	1.5E-03
814	EFWXVPR006B	EFS-VLV-006B PLUG	2.4E-06	3.1E+00	5.0E-06
815	EFWCF4CVOD012-23	EFS-VLV-012A,C FAIL TO OPEN (CCF)	2.3E-07	3.1E+00	4.7E-07
816	CWSCF2PCYR001BD-ALL	NCS-MPP-001B,D (CCW PUMP) FAIL TO RUN (CCF)	5.0E-06	3.0E+00	1.0E-05
817	EFWCF4MVFC017-24	EFS-MOV-017A,CFAIL TO CONTROL (CCF)	5.6E-07	3.0E+00	1.1E-06

Table 19.1-31 Basic Events (Hardware Failure, Human Error) RAW (Sheet 38 of 45)

Rank	Basic Event ID	Basic Event Description	Basic Event Probability	RAW	FV Importance
818	EFWCF4MVFC017-12	EFS-MOV-017A,D FAIL TO CONTROL (CCF)	5.6E-07	3.0E+00	1.1E-06
819	EFWPTAD001D	EFS-MPP-001D (D-EFW PUMP) FAIL TO START	6.5E-03	2.9E+00	1.3E-02
820	EFWPTSR001D	EFS-MPP-001D (D-EFW PUMP) FAIL TO RUN DURING FIRST HOUR OF OPERATION	2.4E-03	2.9E+00	4.7E-03
821	EFWPTLR001D	EFS-MPP-001D (D-EFW PUMP) FAIL TO RUN AFTER FIRST HOUR OF OPERATION	1.5E-03	2.9E+00	3.0E-03
822	EFWPTEL001D	EFS-MPP-001D (D-EFW PUMP) EXTERNAL LEAK LARGE	2.2E-07	2.9E+00	4.2E-07
823	HPICF4PMSR001-134	SIS-MPP-001A,B,D (SI PUMP) FAIL TO RUN DURING FIRST HOUR OF OPERATION (CCF)	3.3E-06	2.9E+00	6.3E-06
824	EFWMVOD103D	EFS-MOV-103D FAIL TO OPEN	9.6E-04	2.9E+00	1.8E-03
825	SWSORPR001C	EWS-SRO-001C (ORIFICE) PLUG	2.4E-05	2.9E+00	4.6E-05
826	CWSORPR042	NCS-FE-042 (ORIFICE) PLUG	2.4E-05	2.9E+00	4.6E-05
827	SWSORPR036	EWS-FE-036 (ORIFICE) PLUG	2.4E-05	2.9E+00	4.6E-05
828	SWSXVPR517C	EWS-VLV-517C PLUG	2.4E-06	2.9E+00	4.6E-06
829	SWSXVPR520C	EWS-VLV-520C PLUG	2.4E-06	2.9E+00	4.6E-06
830	CWSCVPR016C	NCS-VLV-016C PLUG	2.4E-06	2.9E+00	4.6E-06
831	CWSXVPR104C	NCS-VLV-104C PLUG	2.4E-06	2.9E+00	4.6E-06
832	CWSXVPR008C	NCS-VLV-008C PLUG	2.4E-06	2.9E+00	4.6E-06
833	CWSXVPR018C	NCS-VLV-018C PLUG	2.4E-06	2.9E+00	4.6E-06
834	CWSXVPR101C	NCS-VLV-101C PLUG	2.4E-06	2.9E+00	4.6E-06
835	CWSXVPR005C	NCS-VLV-005C PLUG	2.4E-06	2.9E+00	4.6E-06
836	CWSPCYR001C	NCS-MPP-001C (C-CCW PUMP) FAIL TO RUN	6.2E-05	2.9E+00	1.2E-04
837	HPICF4PMAD001-12	SIS-MPP-001B,C (SI PUMP) FAIL TO START (CCF)	2.2E-05	2.9E+00	4.0E-05
838	RSSCF4PMSR001-123	RHS-MPP-001B,C,D (CS/RHR PUMP) FAIL TO RUN DURING FIRST HOUR OF OPERATION (CCF)	1.7E-06	2.8E+00	3.0E-06
839	CWSORPR037	NCS-FE-037 (ORIFICE) PLUG	2.4E-05	2.8E+00	4.3E-05

Table 19.1-31 Basic Events (Hardware Failure, Human Error) RAW (Sheet 39 of 45)

Rank	Basic Event ID	Basic Event Description	Basic Event Probability	RAW	FV Importance
840	HPICF4PMLR001-134	SIS-MPP-001A,B,D (SI PUMP) FAIL TO RUN AFTER FIRST HOUR OF OPERATION (CCF)	1.1E-06	2.8E+00	2.0E-06
841	EPSCBFO52RAT-BC	EPS 52/RATB,C (BREAKER) FAIL TO OPEN (CCF)	5.0E-06	2.8E+00	8.7E-06
842	EPSCF4CBSC52RAT-23	EPS 52/RATB,C (BREAKER) SPURIOUS CLOSE (CCF)	3.4E-08	2.8E+00	5.9E-08
843	EPSCF4CBSO72DB-24	EPS 72/DBA,D (BREAKER) SPURIOUS OPEN (CCF)	3.4E-08	2.7E+00	5.7E-08
844	EPSCF4BYFFBAT-13	CLASS-1E BATTERY A, D FAIL TO OPERATE (CCF)	1.9E-08	2.7E+00	3.2E-08
845	SWSMVOD503B	EWS-MOV-503B FAIL TO OPEN	1.0E-03	2.7E+00	1.7E-03
846	SWSMVPR503B	EWS-MOV-503B PLUG	2.4E-06	2.7E+00	4.1E-06
847	SWSMVCM503B	EWS-MOV-503B SPURIOUS CLOSE	9.6E-07	2.7E+00	1.6E-06
848	SWSMVEL503B	EWS-MOV-503B EXTERNAL LEAK LARGE	2.4E-08	2.7E+00	4.1E-08
849	HPICF4CVOD010-134	SIS-VLV-010A,B,D FAIL TO OPEN (CCF)	2.7E-07	2.7E+00	4.5E-07
850	HPICF4CVOD013-134	SIS-VLV-013A,B,D FAIL TO OPEN (CCF)	2.7E-07	2.7E+00	4.5E-07
851	HPICF4CVOD004-134	SIS-VLV-004A,B,D FAIL TO OPEN (CCF)	2.7E-07	2.7E+00	4.5E-07
852	HPICF4CVOD012-134	SIS-VLV-012A,B,D FAIL TO OPEN (CCF)	2.7E-07	2.7E+00	4.5E-07
853	RSSCF4MVOD145-123	NCS-MOV-145B,C,D FAIL TO OPEN (CCF)	1.5E-06	2.7E+00	2.4E-06
854	NCCOO04014	(HE) NCC MISCALIBRATION OF CSS-PT-014	8.0E-04	2.6E+00	1.3E-03
855	NCCIPFF014	CSS-PT-014 FAIL TO OPERATE	2.7E-05	2.6E+00	4.5E-05
856	SGNPIFD4001B	SLS-B POWER I/F B (DIGITAL PART) FAILURE	2.7E-04	2.6E+00	4.4E-04
857	EPSCF4IVFFIBC-23	CLASS-1E UPS UNIT B,D FAIL TO OPERATE (CCF)	1.0E-06	2.6E+00	1.6E-06
858	SWSSTPRST001B	EWS-SST-001B (STRAINER) PLUG	1.7E-04	2.6E+00	2.7E-04
859	SWSXVPR506B	EWS-VLV-506B PLUG	2.4E-06	2.6E+00	3.9E-06
860	SWSXVPR508B	EWS-VLV-508B PLUG	2.4E-06	2.6E+00	3.9E-06
861	SWSXVEL506B	EWS-VLV-506B EXTERNAL LEAK LARGE	7.2E-08	2.6E+00	1.2E-07
862	SWSXVEL508B	EWS-VLV-508B EXTERNAL LEAK LARGE	7.2E-08	2.6E+00	1.2E-07
863	SWSXVEL509B	EWS-VLV-509B EXTERNAL LEAK LARGE	7.2E-08	2.6E+00	1.2E-07
864	SWSXVEL701B	EWS-VLV-701B EXTERNAL LEAK LARGE	7.2E-08	2.6E+00	1.2E-07

Table 19.1-31 Basic Events (Hardware Failure, Human Error) RAW (Sheet 40 of 45)

Rank	Basic Event ID	Basic Event Description	Basic Event Probability	RAW	FV Importance
865	SWSXVEL507B	EWS-VLV-507B EXTERNAL LEAK LARGE	7.2E-08	2.6E+00	1.2E-07
866	SWSPEELSWPB1	EWS B-ESW PUMP DISCHARGE LINE PIPING EXTERNAL LEAK LARGE	3.6E-09	2.6E+00	5.8E-09
867	SWSTMPE001B	EWS-MPP-001B (B-ESW PUMP) TEST & MAINTENANCE	1.2E-02	2.6E+00	1.9E-02
868	SWSPMYR001B	EWS-MPP-001B (B-ESW PUMP) FAIL TO RUN	1.1E-04	2.6E+00	1.8E-04
869	EPSCF4IVFFMVI-134	MOV INVERTER A1,C,D1 FAIL TO OPERATE FAIL TO OPERATE (CCF)	5.0E-07	2.6E+00	7.9E-07
870	RSSCF4PMLR001-123	RHS-MPP-001B,C,D (CS/RHR PUMP) FAIL TO RUN AFTER FIRST HOUR OF OPERATION (CCF)	5.8E-07	2.6E+00	9.1E-07
871	EFWCVOD012D	EFS-VLV-012D FAIL TO OPEN	9.5E-06	2.6E+00	1.5E-05
872	EFWXVPR013D	EFS-VLV-013D PLUG	2.4E-06	2.6E+00	3.8E-06
873	EFWCVPR012D	EFS-VLV-012D PLUG	2.4E-06	2.6E+00	3.8E-06
874	EFWXVIL023D	EFS-VLV-023D INTERNAL LEAK LARGE	1.1E-05	2.6E+00	1.7E-05
875	EFWXVEL021D	EFS-VLV-021D EXTERNAL LEAK LARGE	7.2E-08	2.6E+00	1.1E-07
876	EFWXVEL023D	EFS-VLV-023D EXTERNAL LEAK LARGE	7.2E-08	2.6E+00	1.1E-07
877	EFWCVEL022D	EFS-VLV-022D EXTERNAL LEAK LARGE	4.8E-08	2.6E+00	7.5E-08
878	EFWCVEL020D	EFS-VLV-020D EXTERNAL LEAK LARGE	4.8E-08	2.6E+00	7.5E-08
879	SWSCF4PMBD001-R-24	EWS-MPP-001A,C (ESW PUMP) FAIL TO RE-START (CCF)	7.1E-05	2.5E+00	1.1E-04
880	EPSCF4CBSO52LC-13	EPS 52/LCB,D (BREAKER) SPURIOUS OPEN (CCF)	3.4E-08	2.5E+00	5.2E-08
881	EPSCF4CBSO52STH-34	EPS 52/STHB,D (BREAKER) SPURIOUS OPEN (CCF)	3.4E-08	2.5E+00	5.2E-08
882	EPSCF4CBSO52STL-24	EPS 52/STLB,D (BREAKER) SPURIOUS OPEN (CCF)	3.4E-08	2.5E+00	5.2E-08
883	EFWTMTA001D	EFS-MPP-001D (D-EFW PUMP) TEST & MAINTENANCE	5.0E-03	2.5E+00	7.7E-03
884	SWSORPR002B	EWS-SRO-002B (ORIFICE) PLUG	2.4E-05	2.5E+00	3.7E-05
885	SWSFMPR071	EWS-FT-071 (FLOW METER) PLUG	2.4E-05	2.5E+00	3.7E-05
886	SWSCVPR602B	EWS-VLV-602B PLUG	2.4E-06	2.5E+00	3.7E-06
887	SWSXVPR601B	EWS-VLV-601B PLUG	2.4E-06	2.5E+00	3.7E-06

Table 19.1-31 Basic Events (Hardware Failure, Human Error) RAW (Sheet 41 of 45)

Rank	Basic Event ID	Basic Event Description	Basic Event Probability	RAW	FV Importance
888	SWSXVEL601B	EWS-VLV-601B EXTERNAL LEAK LARGE	7.2E-08	2.5E+00	1.1E-07
889	SWSCVEL602B	EWS-VLV-602B EXTERNAL LEAK LARGE	4.8E-08	2.5E+00	7.4E-08
890	SWSPEELSWSB2	EWS B-ESW PUMP COOLING LINE PIPING EXTERNAL LEAK LARGE	3.6E-09	2.5E+00	5.5E-09
891	CWSCF2PCBD001BD-ALL	NCS-MPP-001B,D (CCW PUMP) FAIL TO START (CCF)	7.5E-05	2.5E+00	1.1E-04
892	HPICF4PMSR001-12	SIS-MPP-001B,C (SI PUMP) FAIL TO RUN DURING FIRST HOUR OF OPERATION (CCF)	3.6E-06	2.5E+00	5.3E-06
893	SGNST-EFWPA	A-SG WATER LEVEL HIGH/LOW SIGNAL FAILURE	1.2E-03	2.5E+00	1.8E-03
894	CWSCF4PCBD001-R-13	NCS-MPP-001A,C (CCW PUMP) FAIL TO RE-START (CCF)	3.9E-05	2.5E+00	5.8E-05
895	MFWOO02R	(HE) FAIL TO RECOVER MFWS	3.8E-03	2.5E+00	5.6E-03
896	SWSCF4PMBD001-R-12	EWS-MPP-001C,D (ESW PUMP) FAIL TO RE-START (CCF)	7.1E-05	2.4E+00	1.0E-04
897	SWSCF4PMBD001-R-34	EWS-MPP-001A,B (ESW PUMP) FAIL TO RE-START (CCF)	7.1E-05	2.4E+00	1.0E-04
898	RTPCF4ICVRRT6001-124	PRESSURIZER PRESSURE SENSOR 6001 A,C,D CCF	3.7E-07	2.4E+00	5.2E-07
899	RTPCF4ICVRRT6001-123	PRESSURIZER PRESSURE SENSOR 6001 B,C,D CCF	3.7E-07	2.4E+00	5.2E-07
900	RTPCF4ICVRRT6001-134	PRESSURIZER PRESSURE SENSOR 6001 A,B,C CCF	3.7E-07	2.4E+00	5.2E-07
901	RTPCF4ICVRRT6001-234	PRESSURIZER PRESSURE SENSOR 6001 A,B,D CCF	3.7E-07	2.4E+00	5.2E-07
902	SWSXVPR514C	EWS-VLV-514C PLUG	2.4E-06	2.4E+00	3.4E-06
903	SWSXVPR511C	EWS-VLV-511C PLUG	2.4E-06	2.4E+00	3.4E-06
904	EPSTRFF001B	B-CLASS 1E 6.9KV-480V CLASS 1E STATION SERVICE TRANSFORMER FAIL TO OPERATE	8.2E-06	2.4E+00	1.1E-05
905	EPSBSFFLCB	B-CLASS 1E 480V LOAD CENTER FAILURE	5.8E-06	2.4E+00	8.1E-06
906	EPSCBFO52UAT-A	EPS 52/UATA (BREAKER) FAIL TO OPEN	3.5E-04	2.4E+00	4.8E-04
907	EPSCBFO52RAT-A	EPS 52/RATA (BREAKER) FAIL TO OPEN	3.5E-04	2.4E+00	4.8E-04
908	EPSCBSC52RATA	EPS 52/RATA (BREAKER) SPURIOUS CLOSE	3.0E-06	2.4E+00	4.2E-06
909	EPSCBSC52UATA	EPS 52/UATA (BREAKER) SPURIOUS CLOSE	3.0E-06	2.4E+00	4.2E-06

Table 19.1-31 Basic Events (Hardware Failure, Human Error) RAW (Sheet 42 of 45)

Rank	Basic Event ID	Basic Event Description	Basic Event Probability	RAW	FV Importance
910	EPSCF4IVFFMVI-124	MOV INVERTER A1,B,D1 FAIL TO OPERATE FAIL TO OPERATE (CCF)	5.0E-07	2.4E+00	6.9E-07
911	CWSCF4PCBD001-R-23	NCS-MPP-001C,D (CCW PUMP) FAIL TO RE-START (CCF)	3.9E-05	2.4E+00	5.4E-05
912	RSSCF4PMAD001-234	RHS-MPP-001A,B,D (CS/RHR PUMP) FAIL TO START (CCF)	6.3E-06	2.4E+00	8.5E-06
913	CWSCF4PCBD001-R-14	NCS-MPP-001A,B (CCW PUMP) FAIL TO RE-START (CCF)	3.9E-05	2.4E+00	5.4E-05
914	EFWMVPR103D	EFS-MOV-103D PLUG	2.4E-06	2.4E+00	3.3E-06
915	EFWMVCM103D	EFS-MOV-103D SPURIOUS CLOSE	9.6E-07	2.4E+00	1.3E-06
916	EFWMVEL103D	EFS-MOV-103D EXTERNAL LEAK LARGE	2.4E-08	2.4E+00	3.3E-08
917	EFWPNELSTB	EFS D-T/D EFW PUMP STEAM SUPPLY LINE PIPING EXTERNAL LEAK LARGE	6.0E-10	2.4E+00	8.2E-10
918	SWSPMEL001C	EWS-MPP-001C (C-ESW PUMP) EXTERNAL LEAK LARGE	1.9E-07	2.4E+00	2.6E-07
919	EFWXVPR009D	EFS-VLV-009D PLUG	2.4E-06	2.3E+00	3.2E-06
920	EPSBSFFMCA	A-CLASS 1E 6.9KV SWITCHGEAR FAILURE	5.8E-06	2.3E+00	7.6E-06
921	EPSBSFFMCCB	B-CLASS 1E 480V MCC FAILURE	5.8E-06	2.3E+00	7.5E-06
922	HPICF4PMLR001-12	SIS-MPP-001B,C (SI PUMP) FAIL TO RUN AFTER FIRST HOUR OF OPERATION (CCF)	1.2E-06	2.3E+00	1.6E-06
923	EFWCF4CVOD018-24	EFS-VLV-018A,C FAIL TO OPEN (CCF)	2.3E-07	2.3E+00	2.9E-07
924	EFWCF4CVOD018-34	EFS-VLV-018A,D FAIL TO OPEN (CCF)	2.3E-07	2.3E+00	2.9E-07
925	RSSCF4CVOD004-123	RHS-VLV-004B,C,D FAIL TO OPEN (CCF)	2.2E-07	2.3E+00	2.8E-07
926	RSSCF4RHPR001-123	RHS-MHX-001B,C,D (CS/RHR HX) PLUG / FOUL (CCF)	6.4E-08	2.3E+00	8.2E-08
927	SWSCF4PMBD001-R-13	EWS-MPP-001B,D (ESW PUMP) FAIL TO RE-START (CCF)	7.1E-05	2.3E+00	9.2E-05
928	EPSCBSO52LCB	EPS 52/LCB (BREAKER) SPURIOUS OPEN	3.0E-06	2.2E+00	3.7E-06
929	EPSCBSO52STHB	EPS 52/STHB (BREAKER) SPURIOUS OPEN	3.0E-06	2.2E+00	3.7E-06
930	EPSCBSO52STLB	EPS 52/STLB (BREAKER) SPURIOUS OPEN	3.0E-06	2.2E+00	3.7E-06
931	CWSRHPF001C	NCS-MHX-001C (C-CCW HX) PLUG / FOUL	1.4E-06	2.2E+00	1.7E-06
932	CWSCF4PCBD001-R-24	NCS-MPP-001B,D (CCW PUMP) FAIL TO RE-START (CCF)	3.9E-05	2.2E+00	4.9E-05

Table 19.1-31 Basic Events (Hardware Failure, Human Error) RAW (Sheet 43 of 45)

Rank	Basic Event ID	Basic Event Description	Basic Event Probability	RAW	FV Importance
933	SWSCVPR502B	EWS-VLV-502B PLUG	2.4E-06	2.2E+00	2.9E-06
934	SWSCVEL502B	EWS-VLV-502B EXTERNAL LEAK LARGE	4.8E-08	2.2E+00	5.8E-08
935	EPSTRFF001C	C-CLASS 1E 6.9KV-480V CLASS 1E STATION SERVICE TRANSFORMER FAIL TO OPERATE	8.2E-06	2.2E+00	9.6E-06
936	EPSBSFFLCC	C-CLASS 1E 480V LOAD CENTER FAILURE	5.8E-06	2.2E+00	6.8E-06
937	CWSRIEL001C	NCS-MHX-001C (C-CCW HX) TUBE EXTERNAL LEAK LARGE	7.2E-07	2.1E+00	8.2E-07
938	CWSPMEL001C	NCS-MPP-001C (C-CCW PUMP) EXTERNAL LEAK LARGE	1.9E-07	2.1E+00	2.2E-07
939	HPIXVEL111C	NCS-VLV-111C EXTERNAL LEAK LARGE	7.2E-08	2.1E+00	8.2E-08
940	CWSXVEL104C	NCS-VLV-104C EXTERNAL LEAK LARGE	7.2E-08	2.1E+00	8.2E-08
941	HPIXVEL116C	NCS-VLV-116C EXTERNAL LEAK LARGE	7.2E-08	2.1E+00	8.2E-08
942	HPIXVEL119C	NCS-VLV-119C EXTERNAL LEAK LARGE	7.2E-08	2.1E+00	8.2E-08
943	HPIXVEL114C	NCS-VLV-114C EXTERNAL LEAK LARGE	7.2E-08	2.1E+00	8.2E-08
944	HPIXVEL115C	NCS-VLV-115C EXTERNAL LEAK LARGE	7.2E-08	2.1E+00	8.2E-08
945	CWSXVEL101C	NCS-VLV-101C EXTERNAL LEAK LARGE	7.2E-08	2.1E+00	8.2E-08
946	CWSXVEL008C	NCS-VLV-008C EXTERNAL LEAK LARGE	7.2E-08	2.1E+00	8.2E-08
947	CWSXVEL018C	NCS-VLV-018C EXTERNAL LEAK LARGE	7.2E-08	2.1E+00	8.2E-08
948	CWSCVEL016C	NCS-VLV-016C EXTERNAL LEAK LARGE	4.8E-08	2.1E+00	5.5E-08
949	CWSPNELCWC	NCS CWS TRAIN C PIPING EXTERNAL LEAK LARGE	6.0E-10	2.1E+00	6.8E-10
950	EPSCF4DLLRGTG-14	CLASS-1E GTG A,B FAIL TO RUN AFTER FIRST HOUR OF OPERATION (CCF)	2.5E-04	2.1E+00	2.8E-04
951	EPSCF4DLADGTG-12	CLASS-1E GTG A,B FAIL TO START (CCF)	4.3E-05	2.1E+00	4.8E-05
952	EPSCF4DLSRGTG-14	CLASS-1E GTG A,B FAIL TO RUN DURING FIRST HOUR OF OPERATION (CCF)	4.0E-05	2.1E+00	4.5E-05
953	EPSCF4SEFFGTG-14	CLASS-1E GTG A,B SEQUENCER FAIL TO OPERATE (CCF)	2.5E-05	2.1E+00	2.8E-05
954	EPSCF4CBFC52EPS-24	EPS 52/EPSA,B (BREAKER) FAIL TO CLOSE (CCF)	5.0E-06	2.1E+00	5.5E-06
955	EPSCF4CBSO52EPS-14	EPS 52/EPSA,B (BREAKER) SPURIOUS OPEN (CCF)	3.4E-08	2.1E+00	3.7E-08

Table 19.1-31 Basic Events (Hardware Failure, Human Error) RAW (Sheet 44 of 45)

Rank	Basic Event ID	Basic Event Description	Basic Event Probability	RAW	FV Importance
956	EPSCF4DLLRGTG-13	CLASS-1E GTG B,D FAIL TO RUN AFTER FIRST HOUR OF OPERATION (CCF)	2.5E-04	2.1E+00	2.8E-04
957	EPSCF4DLADGTG-24	CLASS-1E GTG B,D FAIL TO START (CCF)	4.3E-05	2.1E+00	4.7E-05
958	EPSCF4DLSRGTG-13	CLASS-1E GTG B,D FAIL TO RUN DURING FIRST HOUR OF OPERATION (CCF)	4.0E-05	2.1E+00	4.4E-05
959	EPSCF4SEFFGTG-13	CLASS-1E GTG B,D SEQUENCER FAIL TO OPERATE (CCF)	2.5E-05	2.1E+00	2.8E-05
960	EPSCF4CBFC52EPS-14	EPS 52/EPSB,D (BREAKER) FAIL TO CLOSE (CCF)	5.0E-06	2.1E+00	5.5E-06
961	EPSCF4CBSO52EPS-13	EPS 52/EPSB,D (BREAKER) SPURIOUS OPEN (CCF)	3.4E-08	2.1E+00	3.7E-08
962	SWSSTPRST003C	EWS-SST-003C (STRAINER) PLUG	1.7E-04	2.1E+00	1.8E-04
963	RWSSUPR001C	SIS-SST-001C (C-ESS/CS STRAINER) PLUG DURING OPERATION	2.1E-04	2.1E+00	2.3E-04
964	EPSBSFFMCCC	C-CLASS 1E 480V MCC FAILURE	5.8E-06	2.1E+00	6.2E-06
965	EFWCF4CVOD012-14	EFS-VLV-012B,D FAIL TO OPEN (CCF)	2.3E-07	2.0E+00	2.3E-07
966	ACWCF2MVOD321-ALL	NCS-MOV-321A,B FAIL TO OPEN (CCF)	4.7E-05	2.0E+00	4.7E-05
967	ACWCF2MVOD325-ALL	NCS-MOV-325A,B FAIL TO OPEN (CCF)	4.7E-05	2.0E+00	4.7E-05
968	SWSRIEL001B	NCS-MHX-001B (B-CCW HX) TUBE EXTERNAL LEAK LARGE	7.2E-07	2.0E+00	7.1E-07
969	SWSXVEL511B	EWS-VLV-511B EXTERNAL LEAK LARGE	7.2E-08	2.0E+00	7.1E-08
970	SWSXVEL514B	EWS-VLV-514B EXTERNAL LEAK LARGE	7.2E-08	2.0E+00	7.1E-08
971	SWSPEELSWSB3	EWS B-CCW HX COOLING LINE PIPING EXTERNAL LEAK LARGE	3.6E-09	2.0E+00	3.5E-09
972	EPSCBSO52LCC	EPS 52/LCC (BREAKER) SPURIOUS OPEN	3.0E-06	2.0E+00	2.9E-06
973	EPSCBSO52STLC	EPS 52/STLC (BREAKER) SPURIOUS OPEN	3.0E-06	2.0E+00	2.9E-06
974	EPSCBSO52STHC	EPS 52/STHC (BREAKER) SPURIOUS OPEN	3.0E-06	2.0E+00	2.9E-06
975	RSSCF4PMSR001-134	RHS-MPP-001A,B,D (CS/RHR PUMP) FAIL TO RUN DURING FIRST HOUR OF OPERATION (CCF)	1.7E-06	2.0E+00	1.6E-06
976	RSSCF4MVOD145-134	NCS-MOV-145A,B,D FAIL TO OPEN (CCF)	1.5E-06	2.0E+00	1.4E-06

Table 19.1-31 Basic Events (Hardware Failure, Human Error) RAW (Sheet 45 of 45)

Rank	Basic Event ID	Basic Event Description	Basic Event Probability	RAW	FV Importance
977	SWSPMBD001C-R	EWS-MPP-001C (C-ESW PUMP) FAIL TO RE-START	1.7E-03	2.0E+00	1.6E-03
978	SWSMVOD503C	EWS-MOV-503C FAIL TO OPEN	1.0E-03	2.0E+00	9.5E-04
979	SWSCVOD502C-R	EWS-VLV-502C FAIL TO RE-OPEN	1.1E-05	2.0E+00	1.1E-05

Table 19.1-32 Common Cause Failure FV Importance

Rank	Basic Event ID	Basic Event Description	Basic Event Probability	FV Importance	RAW
1	EPSCF4DLLRGTG-ALL	CLASS-1E GTG A,B,C,D FAIL TO RUN AFTER FIRST HOUR OF OPERATION (CCF)	9.9E-04	2.2E-01	2.2E+02
2	EPSCF4DLADGTG-ALL	CLASS-1E GTG A,B,C,D FAIL TO START (CCF)	2.1E-04	4.6E-02	2.2E+02
3	RWSCF4SUPR001-ALL	SIS-SST-001A,B,C,D (ESS/CS STRAINER) PLUG DURING OPERATION (CCF)	9.7E-06	3.9E-02	4.0E+03
4	SGNBTSWCCF2	GROUP-2 APPLICATION SOFTWARE CCF	1.0E-05	3.7E-02	3.7E+03
5	EPSCF4DLSRGTG-ALL	CLASS-1E GTG A,B,C,D FAIL TO RUN DURING FIRST HOUR OF OPERATION (CCF)	1.6E-04	3.4E-02	2.2E+02
6	SGNBTHWCCF	DIGITAL I&C HARDWARE CCF	2.1E-06	2.9E-02	1.4E+04
7	EPSCF2DLLRAAC-ALL	AAC A,B FAIL TO RUN AFTER FIRST HOUR OF OPERATION (CCF)	1.5E-03	2.1E-02	1.5E+01
8	SWSCF4PMBD001-R-ALL	EWS-MPP-001A,B,C,D (ESW PUMP) FAIL TO RE-START (CCF)	4.8E-05	1.6E-02	3.3E+02
9	EFWCF2PTAD001AD-ALL	EFS-MPP-001A,D (EFW PUMP) FAIL TO START (CCF)	4.5E-04	1.5E-02	3.5E+01
10	EPSCF4DLLRGTG-234	CLASS-1E GTG A,C,D FAIL TO RUN AFTER FIRST HOUR OF OPERATION (CCF)	2.5E-04	1.0E-02	4.2E+01

Table 19.1-33 Common Cause Failure RAW

Rank	Basic Event ID	Basic Event Description	Basic Event Probability	RAW	FV Importance
1	RTPBTSWCCF	BASIC SOFTWARE CCF	1.0E-07	4.6E+04	4.7E-03
2	SGNBTHWCCF	DIGITAL I&C HARDWARE CCF	2.1E-06	1.4E+04	2.9E-02
3	EPSCF4CBSC52RAT-ALL	EPS 52/RATA,B,C,D (BREAKER) SPURIOUS CLOSE (CCF)	1.6E-07	8.5E+03	1.3E-03
4	EPSCF4CBSC52UAT-ALL	EPS 52/UATA,B,C,D (BREAKER) SPURIOUS CLOSE (CCF)	1.6E-07	8.5E+03	1.3E-03
5	SWSCF4PMYR-FF	EWS-MPP-001A,B,C,D (A,B,C,D-ESW PUMP) FAIL TO RUN (CCF)	1.2E-08	6.2E+03	7.5E-05
6	EPSCF4CBSO52STH-ALL	EPS 52/STHA,B,C,D (BREAKER) SPURIOUS OPEN (CCF)	1.6E-07	6.1E+03	9.6E-04
7	EPSCF4CBSO52STL-ALL	EPS 52/STLA,B,C,D (BREAKER) SPURIOUS OPEN (CCF)	1.6E-07	6.1E+03	9.6E-04
8	CWSCF4RHPR-FF	NCS-MHX-001A,B,C,D (A,B,C,D-CCW HX) PLUG / FOUL (CCF)	3.6E-08	5.8E+03	2.1E-04
9	CWSCF4PCYR-FF	NCS-MPP-001A,B,C,D (A,B,C,D-CCW PUMP) FAIL TO RUN (CCF)	6.7E-09	5.8E+03	3.9E-05
10	EPSCF4CBSO52LC-ALL	EPS 52/LCA,B,C,D (BREAKER) SPURIOUS OPEN (CCF)	1.6E-07	4.6E+03	7.3E-04

Table 19.1-34 Human Error FV Importance

Rank	Basic Event ID	Basic Event Description	Basic Event Probability	FV Importance	RAW
1	EPSOO02RDG	(HE) FAIL TO CONNECT THE ALTERNATE AC POWER SOURCE TO CLASS 1E BUS	2.1E-02	2.9E-01	1.5E+01
2	ACWOO02FS	(HE) FAIL TO ESTABLISH THE ALTERNATE CCWS BY FIRE PROTECTION WATER SUPPLY SYSTEM	1.1E-02	1.8E-01	1.7E+01
3	ACWOO02CT-DP2	(HE) FAIL TO ESTABLISH THE ALTERNATE CCWS BY NON-ESSENTIAL CHILLED WATER SYSTEM COOLING TOWER	5.1E-01	1.7E-01	1.2E+00
4	EFWOO01006AB	(HE) FAIL TO CHANGEOVER EFW PIT	1.7E-02	5.2E-02	4.0E+00
5	HPIOO02FWBD	(HE) FAIL TO OPEN SAFETY DEPRESSURIZATION VALVE AND START SAFETY INJECTION PUMP	3.8E-03	4.2E-02	1.2E+01
6	HPIOO02FWBD-S	(HE) FAIL TO OPEN SAFETY DEPRESSURIZATION VALVE	2.6E-03	2.1E-02	9.0E+00
7	SGNOO01S	(HE) FAIL TO START SAFETY INJECTION PUMP BY DAS	5.7E-02	1.5E-02	1.3E+00
8	NCCOO02CCW	(HE) FAIL TO OPERATE ALTERNATE C/V COOLING BY C/V FAN	2.0E-02	9.5E-03	1.5E+00
9	HPIOO01SDVDAS	(HE) FAIL TO OPEN SAFETY DEPRESSURIZATION VALVE BY DAS	5.7E-02	8.9E-03	1.1E+00
10	MSROO02515A	(HE) FAIL TO CLOSE MSS-SMV-515A	2.6E-03	6.0E-03	3.3E+00

Table 19.1-35 Human Error RAW

Rank	Basic Event ID	Basic Event Description	Basic Event Probability	RAW	FV Importance
1	ACWOO02FS	(HE) FAIL TO ESTABLISH THE ALTERNATE CCWS BY FIRE PROTECTION WATER SUPPLY SYSTEM	1.1E-02	1.7E+01	1.8E-01
2	EPSOO02RDG	(HE) FAIL TO CONNECT THE ALTERNATE AC POWER SOURCE TO CLASS 1E BUS	2.1E-02	1.5E+01	2.9E-01
3	HPIOO02FWBD	(HE) FAIL TO OPEN SAFETY DEPRESSURIZATION VALVE AND START SAFETY INJECTION PUMP	3.8E-03	1.2E+01	4.2E-02
4	HPIOO02FWBD-S	(HE) FAIL TO OPEN SAFETY DEPRESSURIZATION VALVE	2.6E-03	9.0E+00	2.1E-02
5	SGNOO04ICVR12	(HE) MISCALIBRATION OF C/V PRESSURE SENSORS A,B,C,D	6.7E-05	6.2E+00	3.4E-04
6	EFWOO01006AB	(HE) FAIL TO CHANGEOVER EFW PIT	1.7E-02	4.0E+00	5.2E-02
7	MSROO02515A	(HE) FAIL TO CLOSE MSS-SMV-515A	2.6E-03	3.3E+00	6.0E-03
8	NCCOO04014	(HE) NCC MISCALIBRATION OF CSS-PT-014	8.0E-04	2.6E+00	1.3E-03
9	MFWOO02R	(HE) FAIL TO RECOVER MFWS	3.8E-03	2.5E+00	5.6E-03
10	RSSOO02LNUP	(HE) FAIL TO OPERATE ALTERNATE CORE COOLING	7.4E-03	1.7E+00	5.0E-03

Table 19.1-36 Hardware Single Failure FV Importance

Rank	Basic Event ID	Basic Event Description	Basic Event Probability	FV Importance	RAW
1	RTPDASF	DAS FAILURE	1.0E-02	3.0E-02	4.0E+00
2	EFWPTAD001A	EFS-MPP-001A (A-EFW PUMP) FAIL TO START	6.5E-03	2.2E-02	4.4E+00
3	RTPCRDF	ROD INJECTION FAILURE (4< RODS)	1.0E-07	1.9E-02	1.7E+05
4	EPSDLLRAACA-L2	A-AAC FAIL TO LOAD AND RUN AFTER FIRST HOUR OF OPERATION	1.8E-02	1.6E-02	1.9E+00
5	EFWPTAD001D	EFS-MPP-001D (D-EFW PUMP) FAIL TO START	6.5E-03	1.3E-02	2.9E+00
6	EPSDLLRAACB-L2	B-AAC FAIL TO LOAD AND RUN AFTER FIRST HOUR OF OPERATION	1.8E-02	1.3E-02	1.7E+00
7	MFWHARD	MFW SYSTEM FAILURE	1.0E-01	1.1E-02	1.1E+00
8	EFWPTSR001A	EFS-MPP-001A (A-EFW PUMP) FAIL TO RUN DURING FIRST HOUR OF OPERATION	2.4E-03	8.1E-03	4.4E+00
9	EPSDLLREGTGC	C-CLASS 1E GTG FAIL TO LOAD AND RUN AFTER FIRST HOUR OF OPERATION	1.7E-02	7.7E-03	1.5E+00
10	VCWCHBD001B	VWS-MEQ-001B (B-ESSENTIAL CHILLER UNIT) FAIL TO START	1.0E-02	6.4E-03	1.6E+00

Table 19.1-37 Hardware Single Failure RAW

Rank	Basic Event ID	Basic Event Description	Basic Event Probability	RAW	FV Importance
1	RTPCRDF	ROD INJECTION FAILURE (4< RODS)	1.0E-07	1.7E+05	1.9E-02
2	RWSXVEL024	RWS-VLV-024 EXTERNAL LEAK LARGE	7.2E-08	4.0E+03	2.9E-04
3	RWSXVEL001	RWS-VLV-001 EXTERNAL LEAK LARGE	7.2E-08	4.0E+03	2.9E-04
4	RWSCVEL023	RWS-VLV-023 EXTERNAL LEAK LARGE	4.8E-08	4.0E+03	1.9E-04
5	RWSMVEL002	RWS-MOV-002 EXTERNAL LEAK LARGE	2.4E-08	4.0E+03	9.7E-05
6	RWSPNELPIPE1	RWS PIPING BETWEEN RWSP AND RWS-VLV-023 EXTERNAL LEAK LARGE	6.0E-10	4.0E+03	2.4E-06
7	RWSPNELPIPE2	RWS PIPING BETWEEN RWSP AND RWS-VLV-002 EXTERNAL LEAK LARGE	6.0E-10	4.0E+03	2.4E-06
8	RWSTNEL001	RWS-MCP-001 (RWSP) EXTERNAL LEAK LARGE	4.8E-08	4.0E+03	1.9E-04
9	HPIMVEL001B	SIS-MOV-001B EXTERNAL LEAK LARGE	2.4E-08	4.0E+03	9.7E-05
10	HPIMVEL001A	SIS-MOV-001A EXTERNAL LEAK LARGE	2.4E-08	4.0E+03	9.7E-05

Table 19.1-38 Key Sources of Uncertainty and Key Assumptions (Level 1 PRA for Internal Events at Power) (Sheet 1 of 9)

Key Sources of Uncertainty and Key Assumptions		Type (Note)	Summary Results of Qualitative Assessments	Quantitative Approach
Unique Equipment and their Duty to the US-APWR Design	SDVs	M	Motor-operated valves will be more reliable than air-operated valves for feed and bleed operation.	NA
	Motor-Operated Main Steam Depressurization Valves (MSDVs)	M	Hardware failure probabilities of MSDVs are not significant contributors to CDF.	NA
	Advanced Accumulators	M	The failure modes of the advanced accumulators are assumed similar to existing accumulators in the current PWR plants. Advanced accumulators are not significant contributors to CDF.	NA
	CS/RHRS	M	Appropriate conservative and simplified assumptions are made in the event tree / fault tree models.	NA
	Gas turbine generators	M	Sensitivity analysis of failure probability and failure rates was performed.	Sensitivity Analysis (Case 3-2)
	Digital I&C	M	Actuation of automatic signals and operator actions require the digital I&C system. Uncertainty from CCF of basic software, application software or hardware impacts reliability of these signals and operator actions. Sensitivity analyses of various CCF probabilities of basic software, application software and hardware for the digital I&C system were conducted.	Sensitivity Analysis (Case 4-1, 4-4, 4-5)
	AAC application software	M	Software for AAC is independent from the safety-related equipment such as Class 1E GTG to reduce risk caused by software CCF. Sensitivity analysis assuming complete dependency between AAC and the safety related equipment is performed.	Sensitivity Analysis (Case 4-3)

Table 19.1-38 Key Sources of Uncertainty and Key Assumptions (Level 1 PRA for Internal Events at Power) (Sheet 2 of 9)

Key Sources of Uncertainty and Key Assumptions		Type (Note)	Summary Results of Qualitative Assessments	Quantitative Approach
Initiating Event Analysis	Completeness of initiating events to the US-APWR design	C	Rare initiating events to the US-APWR design are assessed.	NA
	Statistical uncertainty of initiating event frequency	P	(Statistical uncertainty is considered)	Uncertainty Analysis
	Event frequency of partial loss of CCWS/ESWS given on line maintenance of CCW and ESW pumps	P	If the unavailability of standby pumps due to maintenance is increased compared to operating plants, the assumed partial loss of CCW/ESW frequency can be underestimated. The contribution of partial loss of CCW to the at-power internal events CDF is approximately 1% and is relatively low compared to other initiating events. Hence, increase in the partial loss of CCW event frequency due to on-line maintenance has only small impact on the CDF.	NA
	Completeness of design and probabilities supporting the omission of ISLOCA from the PRA	C	The RHRS piping withstands higher pressure than operating plants. The RHRS piping design allows the reactor coolant to flow back into the in-containment RWSP which can significantly reduce the risk of an ISLOCA.	NA

Table 19.1-38 Key Sources of Uncertainty and Key Assumptions (Level 1 PRA for Internal Events at Power) (Sheet 3 of 9)

Key Sources of Uncertainty and Key Assumptions		Type (Note)	Summary Results of Qualitative Assessments	Quantitative Approach
Event Tree Analysis	Identification of accident sequences	M	Considered realistic accident sequences.	NA
Success Criteria Analysis	Boundary conditions Plant parameters	M	Appropriate simplified evaluations for the US-APWR have been performed.	NA
System Analysis	Plugging before events occurred is not modeled.	M	It would be hard to plug during normal operation in RCS and safety related systems.	NA
	System unavailability due to test and maintenance	M	US generic data is considered appropriate at design stage. The following components have RAW higher than 2.0 or FV importance higher than 5.0E-03 and are required for adequate control for on-line maintenance. - Turbine driven EFW pump - Essential service water pump - Alternate AC power source - Component cooling water pump and heat exchanger - Essential chilled water pump Component unavailability will be adequately controlled by the maintenance rule. Sensitivity analysis is performed to study the impact caused by on line maintenance.	Sensitivity Analysis (Case 1-1, 1-2, 1-3, 1-4)

Table 19.1-38 Key Sources of Uncertainty and Key Assumptions (Level 1 PRA for Internal Events at Power) (Sheet 4 of 9)

Key Sources of Uncertainty and Key Assumptions		Type (Note)	Summary Results of Qualitative Assessments	Quantitative Approach
System Analysis	Class 1E electrical room HVAC are reliable and do not impact risk	M	Even if losses of HVAC occur, actuation signals of all trains will actually complete within a short time after the occurrence of an initiating event, and therefore, losses of HVAC may not affect the signal actuation. Even if HVAC function were to have impact on signals they will be limited to those that are required to operate hours after the initiating event. It is unlikely for losses of HVAC to actuate spurious signal and lead to functional failure of system so HVAC failure are likely to cause plant trip or malfunction of operating mitigation systems. To relax room heat up after losses of Class 1E electrical room HVAC, the operator will be open the room door and utilize available portable fans.	If Class 1E electrical room heat up were to occur and impact components in the most undesirable way, conditional core damage frequency will be 1.0 and the consequences will be severe.
	System unavailability due to accumulator injection line check valve failure	M	The reliability of accumulator injection has large impact on core damage scenarios of large and medium pipe break LOCA events. Following these initiating events, check valves at the accumulator discharge line will open and will be kept open until the accumulator's small flow rate injection function for core re-flood completes. Hence the failures of check valves potentially occur only at the initial stage of LOCA events, where the advanced accumulator operates same as conventional type accumulators. The reliability of check valves is expected to be same as those of conventional accumulators.	NA

Table 19.1-38 Key Sources of Uncertainty and Key Assumptions (Level 1 PRA for Internal Events at Power) (Sheet 5 of 9)

Key Sources of Uncertainty and Key Assumptions		Type (Note)	Summary Results of Qualitative Assessments	Quantitative Approach
System Analysis	Outage types and their frequencies	M	The four train safety system design of the US-APWR gives higher flexibility of maintenance compared to conventional plants. It is expected that this design feature will reduce the frequency of unplanned shutdown. However, there are uncertainties associated with the frequencies of unplanned shutdown and their duration. A sensitivity analysis which considers the shutdown frequency of all outage types was carried out.	Sensitivity Analysis (Case 04 LPSD)
	Status of pressurize safety valves	M	In LOCCW, PLOCW or LOOP event, initial state of pressurizer safety valves is assumed to be kept open. Then, one of the valves fails to re-close, resulting in LOCA (i.e., safety valve stuck open LOCA). Uncertainty from initial state of the PSVs has potential impact on risk caused by LOCCW, PLOCW or LOOP initiating event. Sensitivity analysis assuming that RCS pressure would not exceed set value of pressurizer safety valve following the initiating events was performed.	Sensitivity Analysis (Case 6-1)
Data Analysis	Test interval	M	Test interval of valves and pumps that are controlled by the TS in Chapter 16 is basically three months, which is the same as the Standard TS. Sensitivity analysis of valve reliability that has high FV importance and long test interval (24 months or more) was performed.	Sensitivity Analysis (Case 7-1)

Table 19.1-38 Key Sources of Uncertainty and Key Assumptions (Level 1 PRA for Internal Events at Power) (Sheet 6 of 9)

Key Sources of Uncertainty and Key Assumptions		Type (Note)	Summary Results of Qualitative Assessments	Quantitative Approach
Data Analysis	Applicability of failure modes to the US-APWR equipment design	M	Potentially valuable generic data sources were collected. All the failure modes of the US-APWR component types were considered.	NA
	Failure probability and failure rates for diesel generators are applied to gas turbine generators.	M	Sensitivity analysis of failure probability and failure rate of GTGs was performed.	Sensitivity Analysis (Case 3-2)
	Statistical uncertainty of failure rate	P	(Statistical uncertainty is considerable)	Uncertainty Analysis
	Failure probability of digital I&C software	M	Actuation of automatic signals and operator actions requires the digital I&C system. Uncertainty from CCF of basic software, application software or hardware impacts reliability of these signals and operator actions. Sensitivity analyses of various CCF probabilities of application software, basic software and hardware for the digital I&C system were conducted.	Sensitivity Analysis (Case 4-1, 4-4, 4-5)
	Reliability of components	M	There is no plant-specific reliability data for the US-APWR. In the design stage, it is likely that the reliability of components of a newly designed plant is within the range of operating US plants. Therefore, US generic data is applicable.	NA

Table 19.1-38 Key Sources of Uncertainty and Key Assumptions (Level 1 PRA for Internal Events at Power) (Sheet 7 of 9)

Key Sources of Uncertainty and Key Assumptions		Type (Note)	Summary Results of Qualitative Assessments	Quantitative Approach
Common Cause Failure Analysis	CCF parameters of emergency diesel generators are applied to gas turbine generators.	M	Sensitivity analysis of gas turbine generator CCF parameters was performed.	Sensitivity Analysis (Case 3-1)
	CCF of inter-systems is not included in the CCF model.	M	The environment, operation or service, design, and maintenance are different between inter-systems.	NA
	Statistical uncertainty of CCF probabilities.	P	(Statistical uncertainty is involved in data base)	Uncertainty Analysis
	CCF between HHIS and accumulator injection system	M	Check valves in HHIS and accumulator injection system have no impact on common cause failures since the valve type (e.g., design pressure and temperature) and operating environment are different.	NA

Table 19.1-38 Key Sources of Uncertainty and Key Assumptions (Level 1 PRA for Internal Events at Power) (Sheet 8 of 9)

Key Sources of Uncertainty and Key Assumptions		Type (Note)	Summary Results of Qualitative Assessments	Quantitative Approach
Common Cause Failure Analysis	CCF in normally running components	M	There are published data for the CCF of normally running pumps to continue to run. Based on expert judgment, the PRA applies a CCF parameter, lower than those reported in the NUREGs, for the normally running CCW and ESW pumps. Uncertainty associated with the CCF parameters for normally running pumps impact the initiating event frequency of total loss of CCW, which has large contribution to the CDF. The PRA considers CCF between normally running pumps and standby pumps, and applies a value of 0.1. This value is expected as a conservative estimation since the running pumps and the standby pumps are initially in an asymmetric configuration. When taking into consideration of the conservative CCF parameter set used for the CCF of pumps with asymmetric configuration, the evaluated initiating event frequency of total loss of CCW for the US-APWR design is not expected be higher than the current value even if uncertainty of CCF for normally running pumps may result in higher CCF parameters.	NA

Table 19.1-38 Key Sources of Uncertainty and Key Assumptions (Level 1 PRA for Internal Events at Power) (Sheet 9 of 9)

Key Sources of Uncertainty and Key Assumptions		Type (Note)	Summary Results of Qualitative Assessments	Quantitative Approach
HRA	Human error probability	M	Sensitivity analyses of post initiating event operator action failure probabilities were performed to study the impact of human errors to CDF. Set all the HEPs to 1.0 or 0.0.	Sensitivity Analysis (Case 2-1, 2-2)
	Statistical uncertainty of human error probability	P	(Statistical uncertainty is considered)	Uncertainty Analysis
	Visual Display Unit (VDU) Interaction	M	Sensitivity studies were carried out assuming that changing windows on the display is not effective to reduce dependencies between actions and cannot be perceived as actions performed in different locations.	Sensitivity Analysis (Case 2-4)
	Frequent training of operator actions	M	Sensitivity analysis assuming that operators perform less frequent training was carried out.	Sensitivity Analysis (Case 2-3)
Note - Uncertainty sources are categorized into three types, Parametric (P), Modeling (M) or Completeness(C).				

Table 19.1-39 Definition of Plant Damage States

Primary System Pressure	Reactor Cavity Flooding Status		C/V Isolated								C/V not Isolated		C/V failure before core damage	C/V Bypass (SGTR)
			Igniter Functional				Igniter not Functional							
			CSS Injected		CSS not Injected		CSS Injected		CSS not Injected		CSS Injected	CSS not Injected		
			C/V Cooled	C/V not Cooled	C/V Cooled	C/V not Cooled	C/V Cooled	C/V not Cooled	C/V Cooled	C/V not Cooled				
			A	B	C	D	E	F	G	H	I	J	K	L
Low	Not Flooded	1	NA	NA	1C	1D	NA	NA	1G	1H	NA	1J	1K	NA
	Flooded after RV Failure	2	2A	2B	2C	2D	2E	2F	2G	2H	2I	2J		
	Flooded before RV Failure	3	3A	3B	3C	3D	3E	3F	3G	3H				
Medium	Not Flooded	4	NA	NA	4C	4D	NA	NA	4G	4H	NA	4J	4K	4L
	Flooded after RV Failure	5	5A	5B	5C	5D	5E	5F	5G	5H	5I	5J		
	Flooded before RV Failure	6	6A	6B	6C	6D	6E	6F	6G	6H				
High	Not Flooded	7	NA	NA	7C	7D	NA	NA	7G	7H	NA	7J	NA	NA
	Flooded after RV Failure	8	8A	8B	8C	8D	8E	8F	8G	8H	8I	8J		
	Flooded before RV Failure	9	9A	9B	9C	9D	9E	9F	9G	9H				

Number of PDS=72

·NA means combination has no possibility.

: Reactor Cavity is flooded when CS success.

: As water is not injected into RV in high pressure sequences, C/V failure before core damage never occurs. Injection with charging pumps is not considered.

: The primary system pressure during SGTR accident sequences is equivalent to medium one.

Table 19.1-40 Definition of CSET Top Events

(Sheet 1 of 3)

Name	Containment Isolation
Symbol	CI
Definition	Defined as a failure, when a containment isolation valve on the containment penetration line except for screening out lines is fails to close. Screening criteria are follows: 1. It connects to the closed loop in containment and its integrity is kept at severe accident. 2. There is an isolation valve, and the outside part of containment is a closed loop that has tolerance at severe accident. 3. It has one blind flange at least. 4. It is managed and has a valve that is normally close or locked close either when power is supplied or lost. 5. It has a normally close or automatic close valve other than containment isolation valves and is inside of containment. Extracted penetrations are as follows. • Chemical volume control system - seal water return line • Liquid waste management system - C/V sump pump discharge line • Instrument air system - instrument air line • Containment purge system - containment low volume purge exhaust line
Success Criteria	One isolation valve in each penetration closed.
Thermal/Hydraulic Computer Code	None.
Operation	(1) Automatic (2) When automatic control is not available due to software CCF, manual closing operation from DAS (3) When DAS is not available, manual closing operation at local.

Name	RCS Depressurization
Symbol	FD
Definition	Defined as a failure, when RCS pressure does not decrease to the degree that high pressure melt ejection does not occur, due to depressurization operation failure etc. Concretely defined as a success, when depressurization valves for severe accident that is a motor operated valves open successfully. Operation delay time is considered that is basis of the design, which guarantees the necessary valve size for depressurization. The necessary valve size for depressurization is confirmed by the MAAP analysis.
Success Criteria	2 of 2 depressurization valves for severe accident open successfully. or 1 of 2 safety depressurization valves open successfully.
Thermal/Hydraulic Computer Code	MAAP
Operation	(1) Detect core damage with core outlet thermometer (2) Manual opening operation from main control room (3) When manual opening operation is not available due to software CCF, manual opening operation from DAS.

Table 19.1-40 Definition of CSET Top Events

(Sheet 2 of 3)

Name	Hydrogen Control
Symbol	IG
Definition	Defined as a success, when necessary igniters are functional for the control of hydrogen concentration in the containment. The effectiveness of igniters is confirmed by the GOTHIC analysis.
Success Criteria	20 of 20 igniters are functional.
Thermal/Hydraulic Computer Code	GOTHIC
Operation	1. Automatic by ECCS actuation signal 2. When automatic control is not available, manual activating operation.

Name	Reactor Cavity Flooding
Symbol	CF
Definition	Defined as a success, when the reactor cavity injection (with CSS or firewater injection into the reactor cavity manually operated) successes by a mission time. The mission time is considered that is basis of the design, which guarantees the necessary flow rate for sufficiently filling the reactor cavity before vessel melt through and cooling the debris in the reactor cavity. The mission time and necessary flow rate of the reactor cavity injection confirmed by the MAAP analysis.
Success Criteria	1 of 4 CSSs is functional. or 1 of 1 firewater injection into the reactor cavity is functional.
Thermal/Hydraulic Computer Code	MAAP
Operation	1. Detect core damage with core outlet thermometer 2. Inject water into the reactor cavity through CSS 3. When failure of CSS, inject water into the reactor cavity through firewater injection

Table 19.1-40 Definition of CSET Top Events

(Sheet 3 of 3)

Name	Recovery of CSS and CS/RHR HX
Symbol	RS
Definition	Defined as a success, when recovery of CSS and CS/RHR HX success by the time to maintain the containment integrity. Electric power supply is a target of the recovery when there is LOOP as the initiating event with the loss of emergency power supply and power is not recovered yet. CCWS or ESWS is a target of the recovery when there is loss of CCW or essential service water as the initiating event. Also they are target of the recovery when there are common cause failures of all CCW to restart after power recovery. Firewater injection to the spray header is considered to extend the mission time to recovery of CCWS or ESWS. The mission time to recovery of these support systems is determined by the MAAP analysis.
Success Criteria	1 of 4 CSS and same train of CS/RHR HX are functional.
Thermal/Hydraulic Computer Code	MAAP
Operation	The operation of the firewater injection to the spray header is follows: 1. Identify containment pressure is greater than the containment design pressure in the monitor. 2. Start firewater injection to spray header 3. Identify containment pressure is less than the containment design pressure minus about 7 psi in the monitor. 4. Stop firewater injection to spray header 5. Return to (1)

Table 19.1-41 Dependencies between Frontline Systems and Supporting Systems of the CSET

Supporting Systems (SSs)		Essential Service Water System				Component Cooling Water System				Saftey Chilled Water System (Safety-related)				Emergency Station Power Supply System (Safety-related)																Emergency Station Power Supply System (Non-safety)				Heating, Ventilating & Air Conditioning System																Instrument Air		Engineered Safety Features Actuation Signal							
		ESWS				CCWS				CWS(S)				Class 1E GTG/ AC6.9kV				AC480V				DC125V (Switchboard)				AC120V (I&C Panelboard)				AC6.9 kV		AC480 V		Safeguard Component Area				Emergency Power Supply Area				Class 1E Electrical Room				Emergency Feedwater Motor-driven Pump Area		Emergency Feedwater Turbine-driven Pump Area		Non-Safety		IA		ECCS Actuation Signal				Containment Spray Actuation Signal			
Frontline Systems (FSs)		A	B	C	D	A	B	C	D	A	B	C	D	A	B	C	D	A	B	C	D	A	B	C	D	A	B	C	D	P1	P2	P1	P2	A	B	C	D	A	B	C	D	A	B	C	D	B	C	A	D	A	B	A	B	A	B	C	D	A	B	C	D
Firewater Injection to Reactor Cavity																		X												X																													
Firewater Injection to Spray Header																		X	X											X																													
Depressurization Valves for Severe Accident																		X			X																																					
Containment Isolation																		X			X	X			X	X			X																						NA	NA					X			X
Hydrogen Control	A																									X						X																						X					
	B																										X						X																						X				

Table 19.1-42 Dominant Cutsets of LRF (Sheet 1 of 10)

No.	Cutsets Freq. (/RY)	Percent (%)	Cutsets	Basic Event Name
1	6.0E-09	5.7	!03SLOCA	SMALL PIPE BREAK LOCA
			NCCOO02CCW	(HE) FAIL TO OPERATE ALTERNATE C/V COOLING BY C/V FAN
			RSSCF4MVOD145-ALL	NCS-MOV-145A,B,C,D FAIL TO OPEN (CCF)
2	4.0E-09	3.8	!19LOOP	LOSS OF OFFSITE POWER
			EPSOO02RDG	(HE) FAIL TO CONNECT THE ALTERNATE AC POWER SOURCE TO CLASS 1E BUS
			OPS----PRBS	POWER RECOVERY SUCCESS (1H)
			RCP----SEAL	RCP SEAL LOCA
			SGNBTSWCCF2	GROUP-2 APPLICATION SOFTWARE CCF
3	3.0E-09	2.9	!19LOOP	LOSS OF OFFSITE POWER
			1CF	REACTOR CAVITY FLOODING FAILS DUE TO LOSS OF POWER SUPPLY
			1FD	RCS DEPRESSURIZATION FAILS DUE TO LOSS OF POWER SUPPLY
			EPSCF4DLLRGTG-ALL	CLASS-1E GTG A,B,C,D FAIL TO RUN AFTER FIRST HOUR OF OPERATION (CCF)
			EPSOO02RDG	(HE) FAIL TO CONNECT THE ALTERNATE AC POWER SOURCE TO CLASS 1E BUS
			LR-5A	CCFP FOR SPECIFIC PDS
			OPS----PRBF	POWER RECOVERY (1H)
			OPS----PRCF	POWER RECOVERY (3H)
			RCP----SEAL	RCP SEAL LOCA

Table 19.1-42 Dominant Cutsets of LRF (Sheet 2 of 10)

No.	Cutsets Freq. (/RY)	Percent (%)	Cutsets	Basic Event Name
4	2.6E-09	2.5	!19LOOP	LOSS OF OFFSITE POWER
			EPSOO02RDG	(HE) FAIL TO CONNECT THE ALTERNATE AC POWER SOURCE TO CLASS 1E BUS
			OPS----PRBF	POWER RECOVERY (1H)
			OPS----PRCS	POWER RECOVERY SUCCESS (3H)
			RCP----SEAL	RCP SEAL LOCA
			SGNBTSWCCF2	GROUP-2 APPLICATION SOFTWARE CCF
5	2.4E-09	2.3	!15LOCCW	LOSS OF COMPONENT COOLING WATER
			RCP----SEAL	RCP SEAL LOCA
			SGNBTSWCCF3	NON-SAFETY (PCMS) APPLICATION SOFTWARE CCF
6	2.2E-09	2.1	!15LOCCW	LOSS OF COMPONENT COOLING WATER
			ACWOO02CT-DP2	(HE) FAIL TO ESTABLISH THE ALTERNATE CCWS BY NON-ESSENTIAL CHILLED WATER SYSTEM COOLING TOWER
			ACWOO02FS	(HE) FAIL TO ESTABLISH THE ALTERNATE CCWS BY FIRE PROTECTION WATER SUPPLY SYSTEM
			CCWRSA	CCW RECOVERY (AFTER CORE MELT)
			RCP----SEAL	RCP SEAL LOCA
7	1.8E-09	1.7	!19LOOP	LOSS OF OFFSITE POWER
			1CF	REACTOR CAVITY FLOODING FAILS DUE TO LOSS OF POWER SUPPLY
			1FD	RCS DEPRESSURIZATION FAILS DUE TO LOSS OF POWER SUPPLY
			EPSOO02RDG	(HE) FAIL TO CONNECT THE ALTERNATE AC POWER SOURCE TO CLASS 1E BUS
			OPS----PRBF	POWER RECOVERY (1H)
			OPS----PRCF	POWER RECOVERY (3H)
			RCP----SEAL	RCP SEAL LOCA
			SGNBTSWCCF2	GROUP-2 APPLICATION SOFTWARE CCF

Table 19.1-42 Dominant Cutsets of LRF (Sheet 3 of 10)

No.	Cutsets Freq. (/RY)	Percent (%)	Cutsets	Basic Event Name
8	1.7E-09	1.6	!15LOCCW	LOSS OF COMPONENT COOLING WATER
			ACWOO02CT-DP2	(HE) FAIL TO ESTABLISH THE ALTERNATE CCWS BY NON-ESSENTIAL CHILLED WATER SYSTEM COOLING TOWER
			ACWOO02FS	(HE) FAIL TO ESTABLISH THE ALTERNATE CCWS BY FIRE PROTECTION WATER SUPPLY SYSTEM
			LR-3A	CCFP FOR SPECIFIC PDS
			RCP----SEAL	RCP SEAL LOCA
9	1.4E-09	1.4	!19LOOP	LOSS OF OFFSITE POWER
			1CF	REACTOR CAVITY FLOODING FAILS DUE TO LOSS OF POWER SUPPLY
			1FD	RCS DEPRESSURIZATION FAILS DUE TO LOSS OF POWER SUPPLY
			EPSCF2DLLRAAC-ALL	AAC A,B FAIL TO RUN AFTER FIRST HOUR OF OPERATION (CCF)
			EPSCF4DLLRGTG-ALL	CLASS-1E GTG A,B,C,D FAIL TO RUN AFTER FIRST HOUR OF OPERATION (CCF)
			LR-5E	CCFP FOR SPECIFIC PDS
			OPS----PRBF	POWER RECOVERY (1H)
			OPS----PRCF	POWER RECOVERY (3H)
			RCP----SEAL	RCP SEAL LOCA
10	1.3E-09	1.3	!03SLOCA	SMALL PIPE BREAK LOCA
			NCCOO02CCW	(HE) FAIL TO OPERATE ALTERNATE C/V COOLING BY C/V FAN
			RSSCF4PMAD001-ALL	RHS-MPP-001A,B,C,D (CS/RHR PUMP) FAIL TO START (CCF)
11	1.3E-09	1.2	!05SGTR	STEAM GENERATOR TUBE RUPTURE
			HITOO02	(HE) FAIL TO CONTROL HIGH HEAD INJECTION FLOW
			MSPMLWTH	WATER HUMMER IN STEAM LINE
			SGNST-EFWPA	A-SG WATER LEVEL HIGH/LOW SIGNAL FAILURE
12	1.2E-09	1.2	!07RVR	REACTOR VESSEL RUPTURE
			LR-3A	CCFP FOR SPECIFIC PDS

Table 19.1-42 Dominant Cutsets of LRF (Sheet 4 of 10)

No.	Cutsets Freq. (/RY)	Percent (%)	Cutsets	Basic Event Name
13	1.2E-09	1.1	!15LOCCW	LOSS OF COMPONENT COOLING WATER
			ACWOO02CT-DP2	(HE) FAIL TO ESTABLISH THE ALTERNATE CCWS BY NON-ESSENTIAL CHILLED WATER SYSTEM COOLING TOWER
			ACWOO02FS	(HE) FAIL TO ESTABLISH THE ALTERNATE CCWS BY FIRE PROTECTION WATER SUPPLY SYSTEM
			RCP----SEAL	RCP SEAL LOCA
			RSAOO02FWP	(HE) FAIL TO OPERATE FIRE PROTECTION WATER PUMP
14	1.0E-09	1.0	!19LOOP	LOSS OF OFFSITE POWER
			1CF	REACTOR CAVITY FLOODING FAILS DUE TO LOSS OF POWER SUPPLY
			1FD	RCS DEPRESSURIZATION FAILS DUE TO LOSS OF POWER SUPPLY
			EPSCF2DLLRAAC-ALL	AAC A,B FAIL TO RUN AFTER FIRST HOUR OF OPERATION (CCF)
			EPSCF4DLLRGTG-ALL	CLASS-1E GTG A,B,C,D FAIL TO RUN AFTER FIRST HOUR OF OPERATION (CCF)
			OPS----PRBF	POWER RECOVERY (1H)
			OPS----PRCF	POWER RECOVERY (3H)
			OPSRSB	OFFSITE POWER RECOVERY(AFTER CORE MELT)
			RCP----SEAL	RCP SEAL LOCA

Table 19.1-42 Dominant Cutsets of LRF (Sheet 5 of 10)

No.	Cutsets Freq. (/RY)	Percent (%)	Cutsets	Basic Event Name
15	1.0E-09	1.0	!19LOOP	LOSS OF OFFSITE POWER
			1CF	REACTOR CAVITY FLOODING FAILS DUE TO LOSS OF POWER SUPPLY
			1FD	RCS DEPRESSURIZATION FAILS DUE TO LOSS OF POWER SUPPLY
			EPSCF4DLLRGTG-ALL	CLASS-1E GTG A,B,C,D FAIL TO RUN AFTER FIRST HOUR OF OPERATION (CCF)
			EPSOO02RDG	(HE) FAIL TO CONNECT THE ALTERNATE AC POWER SOURCE TO CLASS 1E BUS
			OPS----PRBF	POWER RECOVERY (1H)
			OPS----PRCF	POWER RECOVERY (3H)
			OPSRSB	OFFSITE POWER RECOVERY(AFTER CORE MELT)
			RCP----SEAL	RCP SEAL LOCA
			RSBOO02RDG	(HE) FAIL TO CONNECT THE ALTERNATE AC POWER SOURCE TO CLASS 1E BUS(AFTER CORE MELT)
16	1.0E-09	1.0	!10SLBO	STEAM LINE BREAK DOWNSTREAM MSIV
			RTPBTSWCCF	BASIC SOFTWARE CCF
17	8.4E-10	0.8	!19LOOP	LOSS OF OFFSITE POWER
			EPSOO02RDG	(HE) FAIL TO CONNECT THE ALTERNATE AC POWER SOURCE TO CLASS 1E BUS
			OPS----PRBS	POWER RECOVERY SUCCESS (1H)
			RCP----SEAL	RCP SEAL LOCA
			SGNBTHWCCF	DIGITAL I&C HARDWARE CCF
18	8.3E-10	0.8	!02MLOCA	MEDIUM PIPE BREAK LOCA
			NCCOO02CCW	(HE) FAIL TO OPERATE ALTERNATE C/V COOLING BY C/V FAN
			RSSCF4MVOD145-ALL	NCS-MOV-145A,B,C,D FAIL TO OPEN (CCF)

Table 19.1-42 Dominant Cutsets of LRF (Sheet 6 of 10)

No.	Cutsets Freq. (/RY)	Percent (%)	Cutsets	Basic Event Name
19	6.9E-10	0.7	!03SLOCA	SMALL PIPE BREAK LOCA
			NCCOO02CCW	(HE) FAIL TO OPERATE ALTERNATE C/V COOLING BY C/V FAN
			RWSCF4SUPR001-ALL	SIS-SST-001A,B,C,D (ESS/CS STRAINER) PLUG DURING OPERATION (CCF)
20	6.7E-10	0.6	!10SLBO	STEAM LINE BREAK DOWNSTREAM MSIV
			LR-8A	CCFP FOR SPECIFIC PDS
			RTPDASF	DAS FAILURE
			SGNBTSWCCF2	GROUP-2 APPLICATION SOFTWARE CCF
21	6.4E-10	0.6	!19LOOP	LOSS OF OFFSITE POWER
			1CF	REACTOR CAVITY FLOODING FAILS DUE TO LOSS OF POWER SUPPLY
			1FD	RCS DEPRESSURIZATION FAILS DUE TO LOSS OF POWER SUPPLY
			EPSCF4DLADGTG-ALL	CLASS-1E GTG A,B,C,D FAIL TO START (CCF)
			EPSOO02RDG	(HE) FAIL TO CONNECT THE ALTERNATE AC POWER SOURCE TO CLASS 1E BUS
			LR-5A	CCFP FOR SPECIFIC PDS
			OPS----PRBF	POWER RECOVERY (1H)
			OPS----PRCF	POWER RECOVERY (3H)
			RCP----SEAL	RCP SEAL LOCA
22	5.7E-10	0.5	!19LOOP	LOSS OF OFFSITE POWER
			LR-8A	CCFP FOR SPECIFIC PDS
			RTPDASF	DAS FAILURE
			SGNBTHWCCF	DIGITAL I&C HARDWARE CCF
23	5.7E-10	0.5	!03SLOCA	SMALL PIPE BREAK LOCA
			EPSCF4CBSO52STH-ALL	EPS 52/STHA,B,C,D (BREAKER) SPURIOUS OPEN (CCF)
24	5.7E-10	0.5	!03SLOCA	SMALL PIPE BREAK LOCA
			EPSCF4CBSO52STL-ALL	EPS 52/STLA,B,C,D (BREAKER) SPURIOUS OPEN (CCF)

Table 19.1-42 Dominant Cutsets of LRF (Sheet 7 of 10)

No.	Cutsets Freq. (/RY)	Percent (%)	Cutsets	Basic Event Name
25	5.7E-10	0.5	!03SLOCA	SMALL PIPE BREAK LOCA
			EPSCF4CBSO52LC-ALL	EPS 52/LCA,B,C,D (BREAKER) SPURIOUS OPEN (CCF)
26	5.6E-10	0.5	!19LOOP	LOSS OF OFFSITE POWER
			EPSOO02RDG	(HE) FAIL TO CONNECT THE ALTERNATE AC POWER SOURCE TO CLASS 1E BUS
			OPS----PRBF	POWER RECOVERY (1H)
			OPS----PRCS	POWER RECOVERY SUCCESS (3H)
			RCP----SEAL	RCP SEAL LOCA
			SGNBTHWCCF	DIGITAL I&C HARDWARE CCF
27	5.2E-10	0.5	!13TRANS	GENERAL TRANSIENT
			EFWPTAD001A	EFS-MPP-001A (A-EFW PUMP) FAIL TO START
			RTPBTSWCCF	BASIC SOFTWARE CCF
28	5.0E-10	0.5	!10SLBO	STEAM LINE BREAK DOWNSTREAM MSIV
			RSSOO01CSP	(HE) FAIL TO START CV SPRAY SYSTEM
			SGNBTSWCCF2	GROUP-2 APPLICATION SOFTWARE CCF
29	4.7E-10	0.5	!19LOOP	LOSS OF OFFSITE POWER
			1CF	REACTOR CAVITY FLOODING FAILS DUE TO LOSS OF POWER SUPPLY
			1FD	RCS DEPRESSURIZATION FAILS DUE TO LOSS OF POWER SUPPLY
			EPSCF4DLSRGTG-ALL	CLASS-1E GTG A,B,C,D FAIL TO RUN DURING FIRST HOUR OF OPERATION (CCF)
			EPSOO02RDG	(HE) FAIL TO CONNECT THE ALTERNATE AC POWER SOURCE TO CLASS 1E BUS
			LR-5A	CCFP FOR SPECIFIC PDS
			OPS----PRBF	POWER RECOVERY (1H)
			OPS----PRCF	POWER RECOVERY (3H)
			RCP----SEAL	RCP SEAL LOCA

Table 19.1-42 Dominant Cutsets of LRF (Sheet 8 of 10)

No.	Cutsets Freq. (/RY)	Percent (%)	Cutsets	Basic Event Name
30	4.4E-10	0.4	!03SLOCA	SMALL PIPE BREAK LOCA
			LR-3C	CCFP FOR SPECIFIC PDS
			RWSCF4SUPR001-ALL	SIS-SST-001A,B,C,D (ESS/CS STRAINER) PLUG DURING OPERATION (CCF)
31	4.0E-10	0.4	!13TRANS	GENERAL TRANSIENT
			EFWTMTA001A	EFS-MPP-001A (A-EFW PUMP) TEST & MAINTENANCE
			RTPBTSWCCF	BASIC SOFTWARE CCF
32	4.0E-10	0.4	!03SLOCA	SMALL PIPE BREAK LOCA
			EPSCF4DLLRGTG-ALL	CLASS-1E GTG A,B,C,D FAIL TO RUN AFTER FIRST HOUR OF OPERATION (CCF)
			EPSOO02RDG	(HE) FAIL TO CONNECT THE ALTERNATE AC POWER SOURCE TO CLASS 1E BUS
			OPSLOOP	CONSEQUENTIAL LOOP GIVEN A REACTOR TRIP
33	3.9E-10	0.4	!19LOOP	LOSS OF OFFSITE POWER
			1CF	REACTOR CAVITY FLOODING FAILS DUE TO LOSS OF POWER SUPPLY
			1FD	RCS DEPRESSURIZATION FAILS DUE TO LOSS OF POWER SUPPLY
			EPSOO02RDG	(HE) FAIL TO CONNECT THE ALTERNATE AC POWER SOURCE TO CLASS 1E BUS
			OPS----PRBF	POWER RECOVERY (1H)
			OPS----PRCF	POWER RECOVERY (3H)
			RCP----SEAL	RCP SEAL LOCA
			SGNBTHWCCF	DIGITAL I&C HARDWARE CCF

Table 19.1-42 Dominant Cutsets of LRF (Sheet 9 of 10)

No.	Cutsets Freq. (/RY)	Percent (%)	Cutsets	Basic Event Name
34	3.8E-10	0.4	!10SLBO	STEAM LINE BREAK DOWNSTREAM MSIV
			FDAOO01SDVDAS	(HE) FAIL TO OPEN SAFETY DEPRESSURIZATION VALVE BY DAS (AFTER CORE MELT)
			LR-8A	CCFP FOR SPECIFIC PDS
			SGNBTSWCCF2	GROUP-2 APPLICATION SOFTWARE CCF
			SGNOO01S	(HE) FAIL TO START SAFETY INJECTION PUMP BY DAS
35	3.8E-10	0.4	!10SLBO	STEAM LINE BREAK DOWNSTREAM MSIV
			FDAOO01SDVDAS	(HE) FAIL TO OPEN SAFETY DEPRESSURIZATION VALVE BY DAS (AFTER CORE MELT)
			HPIOO01SDVDAS	(HE) FAIL TO OPEN SAFETY DEPRESSURIZATION VALVE BY DAS
			LR-8A	CCFP FOR SPECIFIC PDS
			SGNBTSWCCF2	GROUP-2 APPLICATION SOFTWARE CCF
36	3.6E-10	0.3	!03SLOCA	SMALL PIPE BREAK LOCA
			NCCAVOD022	NCS-PCV-022 FAIL TO OPEN
			RSSCF4MVOD145-ALL	NCS-MOV-145A,B,C,D FAIL TO OPEN (CCF)
37	3.6E-10	0.3	!19LOOP	LOSS OF OFFSITE POWER
			1CF	REACTOR CAVITY FLOODING FAILS DUE TO LOSS OF POWER SUPPLY
			1FD	RCS DEPRESSURIZATION FAILS DUE TO LOSS OF POWER SUPPLY
			EPSCF4DLLRGTG-ALL	CLASS-1E GTG A,B,C,D FAIL TO RUN AFTER FIRST HOUR OF OPERATION (CCF)
			EPSDLLRAACA-L2	A-AAC FAIL TO LOAD AND RUN AFTER FIRST HOUR OF OPERATION
			EPSOO02RDG	(HE) FAIL TO CONNECT THE ALTERNATE AC POWER SOURCE TO CLASS 1E BUS
			LR-5E	CCFP FOR SPECIFIC PDS
			OPS----PRBF	POWER RECOVERY (1H)
			OPS----PRCF	POWER RECOVERY (3H)
			RCP----SEAL	RCP SEAL LOCA

Table 19.1-42 Dominant Cutsets of LRF (Sheet 10 of 10)

No.	Cutsets Freq. (/RY)	Percent (%)	Cutsets	Basic Event Name
38	3.6E-10	0.3	!19LOOP	LOSS OF OFFSITE POWER
			1CF	REACTOR CAVITY FLOODING FAILS DUE TO LOSS OF POWER SUPPLY
			1FD	RCS DEPRESSURIZATION FAILS DUE TO LOSS OF POWER SUPPLY
			EPSCF4DLLRGTG-ALL	CLASS-1E GTG A,B,C,D FAIL TO RUN AFTER FIRST HOUR OF OPERATION (CCF)
			EPSDLLRAACB-L2	B-AAC FAIL TO LOAD AND RUN AFTER FIRST HOUR OF OPERATION
			EPSOO02RDG	(HE) FAIL TO CONNECT THE ALTERNATE AC POWER SOURCE TO CLASS 1E BUS
			LR-5E	CCFP FOR SPECIFIC PDS
			OPS----PRBF	POWER RECOVERY (1H)
			OPS----PRCF	POWER RECOVERY (3H)
			RCP----SEAL	RCP SEAL LOCA
39	3.6E-10	0.3	!03SLOCA	SMALL PIPE BREAK LOCA
			RTPBTSWCCF	BASIC SOFTWARE CCF
40	3.6E-10	0.3	!03SLOCA	SMALL PIPE BREAK LOCA
			NCCOO02CCW	(HE) FAIL TO OPERATE ALTERNATE C/V COOLING BY C/V FAN
			RSSCF4PMSR001-ALL	RHS-MPP-001A,B,C,D (CS/RHR PUMP) FAIL TO RUN DURING FIRST HOUR OF OPERATION (CCF)

Table 19.1-43 Contribution of Initiating Events to LRF

Initiating Event ID	Initiating Event Description	Percent Contribution
LOOP	Loss of Offsite Power	40.4%
SLOCA	Small Pipe Break LOCA	18.0%
LOCCW	Loss of Component Cooling Water	10.7%
SGTR	Steam Generator Tube Rupture	10.2%
PLOCW	Partial Loss of Component Cooling Water	8.1%
SLBO	Steam Line Break/Leak (Downstream MSIV: Turbine side)	3.9%
MLOCA	Medium Pipe Break LOCA	2.5%
TRANS	General Transient	2.2%
RVR	RV Rupture	1.2%
LOFF	Loss of Feedwater Flow	1.0%
VSLOCA	Very Small Pipe Break LOCA	0.9%
ATWS	Anticipated Transient Without Scram	0.6%
LOAC	Loss of Vital AC Bus	0.2%
FWLB	Feed-water Line Break	0.1%
LODC	Loss of Vital DC Bus	0.0%
SLBI	Steam Line Break/Leak (Upstream MSIV: CV side)	0.0%
LLOCA	Large Pipe Break LOCA	0.0%
	TOTAL =	100.0%

Table 19.1-44 Basic Events (Hardware Failure, Human Error) FV Importance for LRF (Sheet 1 of 7)

Rank	Basic Event ID	Basic Event Description	Basic Event Probability	FV Importance	RAW
1	OPS----PRBF	POWER RECOVERY (1H)	5.3E-01	2.7E-01	1.2E+00
2	OPS----PRCF	POWER RECOVERY (3H)	4.1E-01	2.3E-01	1.3E+00
3	EPSOO02RDG	(HE) FAIL TO CONNECT THE ALTERNATE AC POWER SOURCE TO CLASS 1E BUS	2.1E-02	2.2E-01	1.1E+01
4	SGNBTSWCCF2	GROUP-2 APPLICATION SOFTWARE CCF	1.0E-05	1.7E-01	1.7E+04
5	EPSCF4DLLRGTG-ALL	CLASS-1E GTG A,B,C,D FAIL TO RUN AFTER FIRST HOUR OF OPERATION (CCF)	9.9E-04	1.4E-01	1.5E+02
6	NCCOO02CCW	(HE) FAIL TO OPERATE ALTERNATE C/V COOLING BY C/V FAN	2.0E-02	1.0E-01	6.0E+00
7	RSSCF4MVOD145-ALL	NCS-MOV-145A,B,C,D FAIL TO OPEN (CCF)	8.4E-05	9.7E-02	1.2E+03
8	OPSLOOP	CONSEQUENTIAL LOOP GIVEN A REACTOR TRIP	5.3E-03	8.5E-02	1.7E+01
9	ACWOO02FS	(HE) FAIL TO ESTABLISH THE ALTERNATE CCWS BY FIRE PROTECTION WATER SUPPLY SYSTEM	1.1E-02	7.1E-02	7.2E+00
10	OPSRSB	OFFSITE POWER RECOVERY(AFTER CORE MELT)	8.3E-02	7.0E-02	1.8E+00
11	ACWOO02CT-DP2	(HE) FAIL TO ESTABLISH THE ALTERNATE CCWS BY NON-ESSENTIAL CHILLED WATER SYSTEM COOLING TOWER	5.1E-01	6.8E-02	1.1E+00
12	MSROO02515A	(HE) FAIL TO CLOSE MSS-SMV-515A	2.6E-03	5.9E-02	2.4E+01
13	OPS----PRBS	POWER RECOVERY SUCCESS (1H)	4.7E-01	5.5E-02	1.1E+00
14	SGNBTHWCCF	DIGITAL I&C HARDWARE CCF	2.1E-06	4.6E-02	2.2E+04
15	EPSCF2DLLRAAC-ALL	AAC A,B FAIL TO RUN AFTER FIRST HOUR OF OPERATION (CCF)	1.5E-03	4.5E-02	3.2E+01

Table 19.1-44 Basic Events (Hardware Failure, Human Error) FV Importance for LRF (Sheet 2 of 7)

Rank	Basic Event ID	Basic Event Description	Basic Event Probability	FV Importance	RAW
16	CCWRSA	CCW RECOVERY (AFTER CORE MELT)	1.6E-02	4.4E-02	3.8E+00
17	EPSDLLRAACB-L2	B-AAC FAIL TO LOAD AND RUN AFTER FIRST HOUR OF OPERATION	1.8E-02	4.1E-02	3.3E+00
18	EPSDLLRAACA-L2	A-AAC FAIL TO LOAD AND RUN AFTER FIRST HOUR OF OPERATION	1.8E-02	3.7E-02	3.1E+00
19	OPS----PRCS	POWER RECOVERY SUCCESS (3H)	5.9E-01	3.7E-02	1.0E+00
20	RTPBTSWCCF	BASIC SOFTWARE CCF	1.0E-07	3.7E-02	3.6E+05
21	SGNBTSWCCF3	NON-SAFETY (PCMS) APPLICATION SOFTWARE CCF	1.0E-04	3.2E-02	3.2E+02
22	EPSCF4DLADGTG-ALL	CLASS-1E GTG A,B,C,D FAIL TO START (CCF)	2.1E-04	3.1E-02	1.5E+02
23	RTPDASF	DAS FAILURE	1.0E-02	2.6E-02	3.5E+00
24	RSAOO02FWP	(HE) FAIL TO OPERATE FIRE PROTECTION WATER PUMP	8.5E-03	2.4E-02	3.8E+00
25	EPSTMDGAACB	B-AAC TEST & MAINTENANCE	1.2E-02	2.4E-02	3.0E+00
26	EPSCF4DLSRGTG-ALL	CLASS-1E GTG A,B,C,D FAIL TO RUN DURING FIRST HOUR OF OPERATION (CCF)	1.6E-04	2.3E-02	1.5E+02
27	RSSCF4PMAD001-ALL	RHS-MPP-001A,B,C,D (CS/RHR PUMP) FAIL TO START (CCF)	1.9E-05	2.2E-02	1.2E+03
28	EPSTMDGAACA	A-AAC TEST & MAINTENANCE	1.2E-02	2.1E-02	2.8E+00
29	HITOO02	(HE) FAIL TO CONTROL HIGH HEAD INJECTION FLOW	2.7E-02	2.1E-02	1.8E+00
30	MSPMLWTH	WATER HUMMER IN STEAM LINE	1.0E-02	1.8E-02	2.8E+00
31	EFWPTAD001A	EFS-MPP-001A (A-EFW PUMP) FAIL TO START	6.5E-03	1.8E-02	3.7E+00

Table 19.1-44 Basic Events (Hardware Failure, Human Error) FV Importance for LRF (Sheet 3 of 7)

Rank	Basic Event ID	Basic Event Description	Basic Event Probability	FV Importance	RAW
32	SGNST-EFWPA	A-SG WATER LEVEL HIGH/LOW SIGNAL FAILURE	1.2E-03	1.7E-02	1.5E+01
33	HITOO02-DP3	(HE) FAIL TO CONTROL HIGH HEAD INJECTION FLOW	1.7E-01	1.7E-02	1.1E+00
34	EFWOO01006AB	(HE) FAIL TO CHANGEOVER EFW PIT	1.7E-02	1.7E-02	2.0E+00
35	RWSCF4SUPR001-ALL	SIS-SST-001A,B,C,D (ESS/CS STRAINER) PLUG DURING OPERATION (CCF)	9.7E-06	1.6E-02	1.7E+03
36	PZROO02PORV-DP3	(HE) FAIL TO OPERATE RCS FORCED DEPRESSURIZATION	1.5E-01	1.5E-02	1.1E+00
37	RSBOO02RDG	(HE) FAIL TO CONNECT THE ALTERNATE AC POWER SOURCE TO CLASS 1E BUS(AFTER CORE MELT)	7.0E-02	1.5E-02	1.2E+00
38	MSPOO02STRV-SG-DP3	(HE) FAIL TO DEPRESSURIZE RCS BY SECONDARY SIDE COOLING	1.5E-01	1.5E-02	1.1E+00
39	EPSDLLREGTGC	C-CLASS 1E GTG FAIL TO LOAD AND RUN AFTER FIRST HOUR OF OPERATION	1.7E-02	1.4E-02	1.8E+00
40	NCCOO04014	(HE) NCC MISCALIBRATION OF CSS-PT-014	8.0E-04	1.3E-02	1.8E+01
41	RSSOO01CSP	(HE) FAIL TO START CV SPRAY SYSTEM	5.0E-03	1.3E-02	3.6E+00
42	FDAOO01SDVDAS	(HE) FAIL TO OPEN SAFETY DEPRESSURIZATION VALVE BY DAS (AFTER CORE MELT)	1.0E-01	1.3E-02	1.1E+00
43	EFWTMTA001A	EFS-MPP-001A (A-EFW PUMP) TEST & MAINTENANCE	5.0E-03	1.2E-02	3.5E+00
44	MSPOO0250A1-DP2	(HE) FAIL TO CLOSE MSS-50A1 (MANUAL VALVE)	5.8E-02	1.2E-02	1.2E+00

Table 19.1-44 Basic Events (Hardware Failure, Human Error) FV Importance for LRF (Sheet 4 of 7)

Rank	Basic Event ID	Basic Event Description	Basic Event Probability	FV Importance	RAW
45	MSPOO0250C1-DP2	(HE) FAIL TO CLOSE MSS-50C1 (MANUAL VALVE)	5.8E-02	1.2E-02	1.2E+00
46	MSPOO0250B1-DP2	(HE) FAIL TO CLOSE MSS-50B1 (MANUAL VALVE)	5.8E-02	1.2E-02	1.2E+00
47	EPSDLADAACB	B-AAC FAIL TO START	4.7E-03	1.1E-02	3.3E+00
48	EPSDLADAACA	A-AAC FAIL TO START	4.7E-03	1.0E-02	3.1E+00
49	EFWPTAD001D	EFS-MPP-001D (D-EFW PUMP) FAIL TO START	6.5E-03	9.8E-03	2.5E+00
50	EPSDLLREGTGD	D-CLASS 1E GTG FAIL TO LOAD AND RUN AFTER FIRST HOUR OF OPERATION	1.7E-02	9.5E-03	1.6E+00
51	EPSCF4CBSO52STL-ALL	EPS 52/STLA,B,C,D (BREAKER) SPURIOUS OPEN (CCF)	1.6E-07	9.4E-03	5.9E+04
52	EPSCF4CBSO52STH-ALL	EPS 52/STHA,B,C,D (BREAKER) SPURIOUS OPEN (CCF)	1.6E-07	9.4E-03	5.9E+04
53	EPSCF2DLADAAC-ALL	AAC A,B FAIL TO START (CCF)	3.1E-04	9.3E-03	3.2E+01
54	SWSTMPE001D	EWS-MPP-001D (D-ESW PUMP) TEST & MAINTENANCE	1.2E-02	9.3E-03	1.8E+00
55	EFWCF2PTAD001AD-ALL	EFS-MPP-001A,D (EFW PUMP) FAIL TO START (CCF)	4.5E-04	8.8E-03	2.0E+01
56	SWSCF4PMBD001-R-ALL	EWS-MPP-001A,B,C,D (ESW PUMP) FAIL TO RE-START (CCF)	4.8E-05	8.5E-03	1.8E+02
57	EPSTMDGEGTGC	C-CLASS 1E GTG TEST & MAINTENANCE	1.2E-02	8.1E-03	1.7E+00
58	SGNOO01S	(HE) FAIL TO START SAFETY INJECTION PUMP BY DAS	5.7E-02	7.9E-03	1.1E+00
59	MSPOO0250A2-DP2	(HE) FAIL TO CLOSE MSS-50A2 (MANUAL VALVE)	5.8E-02	7.8E-03	1.1E+00

Table 19.1-44 Basic Events (Hardware Failure, Human Error) FV Importance for LRF (Sheet 5 of 7)

Rank	Basic Event ID	Basic Event Description	Basic Event Probability	FV Importance	RAW
60	MSPOO0250B2-DP2	(HE) FAIL TO CLOSE MSS-50B2 (MANUAL VALVE)	5.8E-02	7.8E-03	1.1E+00
61	MSPOO0250C2-DP2	(HE) FAIL TO CLOSE MSS-50C2 (MANUAL VALVE)	5.8E-02	7.8E-03	1.1E+00
62	RSSOO02LNUP-SG-DP3	(HE) FAIL TO TRANSFER TO RHR OPERATION MODE	1.5E-01	7.6E-03	1.0E+00
63	HPIOO02FWBD-S-DP4	(HE) FAIL TO OPEN SAFETY DEPRESSURIZATION VALVE	5.0E-01	7.6E-03	1.0E+00
64	EPSCF4DLLRGTG-234	CLASS-1E GTG A,C,D FAIL TO RUN AFTER FIRST HOUR OF OPERATION (CCF)	2.5E-04	7.6E-03	3.1E+01
65	HPIOO01SDVDAS	(HE) FAIL TO OPEN SAFETY DEPRESSURIZATION VALVE BY DAS	5.7E-02	7.5E-03	1.1E+00
66	EPSCF4CBSO52LC-ALL	EPS 52/LCA,B,C,D (BREAKER) SPURIOUS OPEN (CCF)	1.6E-07	7.1E-03	4.5E+04
67	CHIOO01CHIB	(HE) FAIL TO START THE STANDBY CHARGING INJECTION PUMP B	2.6E-03	7.1E-03	3.8E+00
68	EPSCF2DLSRAAC-ALL	AAC A,B FAIL TO RUN DURING FIRST HOUR OF OPERATION (CCF)	2.3E-04	7.1E-03	3.2E+01
69	HPIOO02FWBD-S	(HE) FAIL TO OPEN SAFETY DEPRESSURIZATION VALVE	2.6E-03	6.9E-03	3.7E+00
70	SWSTMPE001B	EWS-MPP-001B (B-ESW PUMP) TEST & MAINTENANCE	1.2E-02	6.9E-03	1.6E+00
71	NCCOO02CCW-DP2	(HE) FAIL TO OPERATE ALTERNATE C/V COOLING BY C/V FAN	6.9E-02	6.7E-03	1.1E+00
72	EPSSEFFAACB	B-AAC SEQUENCER FAIL TO OPERATE	2.9E-03	6.7E-03	3.3E+00

Table 19.1-44 Basic Events (Hardware Failure, Human Error) FV Importance for LRF (Sheet 6 of 7)

Rank	Basic Event ID	Basic Event Description	Basic Event Probability	FV Importance	RAW
73	EPSDLSRAACB	B-AAC FAIL TO LOAD AND RUN DURING FIRST HOUR OF OPERATION	2.8E-03	6.5E-03	3.3E+00
74	EFWPTSR001A	EFS-MPP-001A (A-EFW PUMP) FAIL TO RUN DURING FIRST HOUR OF OPERATION	2.4E-03	6.4E-03	3.7E+00
75	EPSOO01UATRAT	(HE) FAIL TO SEPARATE 52/UATA,D,52/RATA,D (BREAKER) AT LOCAL	1.6E-02	6.2E-03	1.4E+00
76	NCCAVOD022	NCS-PCV-022 FAIL TO OPEN	1.2E-03	6.2E-03	6.1E+00
77	EPSSEFFAACA	A-AAC SEQUENCER FAIL TO OPERATE	2.9E-03	6.1E-03	3.1E+00
78	HPIOO02FWBD	(HE) FAIL TO OPEN SAFETY DEPRESSURIZATION VALVE AND START SAFETY INJECTION PUMP	3.8E-03	5.9E-03	2.6E+00
79	EPSCBFO52RAT-ACD	EPS 52/RATA,C,D (BREAKER) FAIL TO OPEN (CCF)	5.2E-06	5.9E-03	1.1E+03
80	EPSCBFO52UAT-ACD	EPS 52/UATA,C,D (BREAKER) FAIL TO OPEN (CCF)	5.2E-06	5.9E-03	1.1E+03
81	EPSDLSRAACA	A-AAC FAIL TO LOAD AND RUN DURING FIRST HOUR OF OPERATION	2.8E-03	5.9E-03	3.1E+00
82	RSSCF4PMSR001-ALL	RHS-MPP-001A,B,C,D (CS/RHR PUMP) FAIL TO RUN DURING FIRST HOUR OF OPERATION (CCF)	5.0E-06	5.9E-03	1.2E+03
83	EFWTMTA001D	EFS-MPP-001D (D-EFW PUMP) TEST & MAINTENANCE	5.0E-03	5.9E-03	2.2E+00
84	OPS----PRDF	OFFSITE POWER RECOVERY FAILURE WITHIN 24 HOURS	1.8E-02	5.7E-03	1.3E+00

Table 19.1-44 Basic Events (Hardware Failure, Human Error) FV Importance for LRF (Sheet 7 of 7)

Rank	Basic Event ID	Basic Event Description	Basic Event Probability	FV Importance	RAW
85	RSSCF4RHPR001-ALL	RHS-MHX-001A,B,C,D (CS/RHR HX) PLUG / FOUL (CCF)	4.8E-06	5.6E-03	1.2E+03
86	EPSCF4SEFFGTG-ALL	CLASS-1E GTG A,B,C,D SEQUENCER FAIL TO OPERATE (CCF)	3.8E-05	5.4E-03	1.5E+02
87	CWSTMRC001D	NCS-MHX-001D (D-CCW HX) TEST & MAINTENANCE	7.0E-03	5.4E-03	1.8E+00
88	NCCMVOD403	VWS-MOV-403 FAIL TO OPEN	1.0E-03	5.1E-03	6.1E+00
89	NCCMVOD422	VWS-MOV-422 FAIL TO OPEN	1.0E-03	5.1E-03	6.1E+00
90	NCCMVCD414	VWS-MOV-414 FAIL TO CLOSE	1.0E-03	5.1E-03	6.1E+00
91	NCCMVOD242	NCS-MOV-242 FAIL TO OPEN	1.0E-03	5.1E-03	6.1E+00
92	NCCMVOD407	VWS-MOV-407 FAIL TO OPEN	1.0E-03	5.1E-03	6.1E+00
93	NCCMVOD241	NCS-MOV-241 FAIL TO OPEN	1.0E-03	5.1E-03	6.1E+00
94	EPSTMDGEGTGD	D-CLASS 1E GTG TEST & MAINTENANCE	1.2E-02	5.1E-03	1.4E+00

Table 19.1-45 Basic Events (Hardware Failure, Human Error) RAW for LRF (Sheet 1 of 60)

Rank	Basic Event ID	Basic Event Description	Basic Event Probability	FV Importance	RAW
1	RTPBTSWCCF	BASIC SOFTWARE CCF	1.0E-07	3.7E-02	3.6E+05
2	EPSCF4CBSO52STL-ALL	EPS 52/STLA,B,C,D (BREAKER) SPURIOUS OPEN (CCF)	1.6E-07	9.4E-03	5.9E+04
3	EPSCF4CBSO52STH-ALL	EPS 52/STHA,B,C,D (BREAKER) SPURIOUS OPEN (CCF)	1.6E-07	9.4E-03	5.9E+04
4	SWSCF4PMYR-FF	EWS-MPP-001A,B,C,D (A,B,C,D-ESW PUMP) FAIL TO RUN (CCF)	1.2E-08	7.0E-04	5.8E+04
5	CWSCF4RHPR-FF	NCS-MHX-001A,B,C,D (A,B,C,D-CCW HX) PLUG / FOUL (CCF)	3.6E-08	1.9E-03	5.3E+04
6	CWSCF4PCYR-FF	NCS-MPP-001A,B,C,D (A,B,C,D-CCW PUMP) FAIL TO RUN (CCF)	6.7E-09	3.6E-04	5.3E+04
7	EPSCF4CBSO52LC-ALL	EPS 52/LCA,B,C,D (BREAKER) SPURIOUS OPEN (CCF)	1.6E-07	7.1E-03	4.5E+04
8	RTPCRDF	ROD INJECTION FAILURE (4< RODS)	1.0E-07	2.6E-03	2.6E+04
9	SGNBTHWCCF	DIGITAL I&C HARDWARE CCF	2.1E-06	4.6E-02	2.2E+04
10	SGNBTSWCCF2	GROUP-2 APPLICATION SOFTWARE CCF	1.0E-05	1.7E-01	1.7E+04
11	EPSCF4CBSC52RAT-ALL	EPS 52/RATA,B,C,D (BREAKER) SPURIOUS CLOSE (CCF)	1.6E-07	1.5E-03	9.5E+03
12	EPSCF4CBSC52UAT-ALL	EPS 52/UATA,B,C,D (BREAKER) SPURIOUS CLOSE (CCF)	1.6E-07	1.5E-03	9.5E+03
13	EPSCF4CBSO72DB-ALL	EPS 72/DBA,B,C,D (BREAKER) SPURIOUS OPEN (CCF)	1.6E-07	1.3E-03	8.3E+03
14	EPSCF4BYFFBAT-ALL	CLASS-1E BATTERY A, B, C, D FAIL TO OPERATE (CCF)	5.0E-08	4.2E-04	8.3E+03
15	EPSCF4CBSO52STH-124	EPS 52/STHA,C,D (BREAKER) SPURIOUS OPEN (CCF)	2.9E-08	8.9E-05	3.1E+03

Table 19.1-45 Basic Events (Hardware Failure, Human Error) RAW for LRF (Sheet 2 of 60)

Rank	Basic Event ID	Basic Event Description	Basic Event Probability	FV Importance	RAW
16	EPSCF4CBSO52STL-134	EPS 52/STLA,C,D (BREAKER) SPURIOUS OPEN (CCF)	2.9E-08	8.9E-05	3.1E+03
17	EPSCF4CBSO52LC-234	EPS 52/LCA,C,D (BREAKER) SPURIOUS OPEN (CCF)	2.9E-08	6.6E-05	2.3E+03
18	RWSCF4SUPR001-ALL	SIS-SST-001A,B,C,D (ESS/CS STRAINER) PLUG DURING OPERATION (CCF)	9.7E-06	1.6E-02	1.7E+03
19	RWSXVEL001	RWS-VLV-001 EXTERNAL LEAK LARGE	7.2E-08	1.2E-04	1.7E+03
20	RWSXVEL024	RWS-VLV-024 EXTERNAL LEAK LARGE	7.2E-08	1.2E-04	1.7E+03
21	RWSCVEL023	RWS-VLV-023 EXTERNAL LEAK LARGE	4.8E-08	7.9E-05	1.7E+03
22	RWSMVEL002	RWS-MOV-002 EXTERNAL LEAK LARGE	2.4E-08	4.0E-05	1.7E+03
23	RWSPNELPIPE1	RWS PIPING BETWEEN RWSP AND RWS-VLV-023 EXTERNAL LEAK LARGE	6.0E-10	9.9E-07	1.7E+03
24	RWSPNELPIPE2	RWS PIPING BETWEEN RWSP AND RWS-VLV-002 EXTERNAL LEAK LARGE	6.0E-10	9.9E-07	1.7E+03
25	RWSTNEL001	RWS-MCP-001 (RWSP) EXTERNAL LEAK LARGE	4.8E-08	7.9E-05	1.6E+03
26	HPIMVEL001D	SIS-MOV-001D EXTERNAL LEAK LARGE	2.4E-08	3.9E-05	1.6E+03
27	HPIMVEL001A	SIS-MOV-001A EXTERNAL LEAK LARGE	2.4E-08	3.9E-05	1.6E+03
28	HPIMVEL001B	SIS-MOV-001B EXTERNAL LEAK LARGE	2.4E-08	3.9E-05	1.6E+03
29	HPIMVEL001C	SIS-MOV-001C EXTERNAL LEAK LARGE	2.4E-08	3.9E-05	1.6E+03
30	RSSMVELCSS001D	CSS-MOV-001D EXTERNAL LEAK LARGE	2.4E-08	3.9E-05	1.6E+03
31	RSSMVELCSS001C	CSS-MOV-001C EXTERNAL LEAK LARGE	2.4E-08	3.9E-05	1.6E+03
32	RSSMVELCSS001A	CSS-MOV-001A EXTERNAL LEAK LARGE	2.4E-08	3.9E-05	1.6E+03
33	RSSMVELCSS001B	CSS-MOV-001B EXTERNAL LEAK LARGE	2.4E-08	3.9E-05	1.6E+03
34	EPSCF4CBSO52STL-124	EPS 52/STLA,B,D (BREAKER) SPURIOUS OPEN (CCF)	2.9E-08	4.2E-05	1.4E+03

Table 19.1-45 Basic Events (Hardware Failure, Human Error) RAW for LRF (Sheet 3 of 60)

Rank	Basic Event ID	Basic Event Description	Basic Event Probability	FV Importance	RAW
35	EPSCF4CBSO52STH-134	EPS 52/STHA,B,D (BREAKER) SPURIOUS OPEN (CCF)	2.9E-08	4.2E-05	1.4E+03
36	EPSCF4CBSO52LC-123	EPS 52/LCB,C,D (BREAKER) SPURIOUS OPEN (CCF)	2.9E-08	4.1E-05	1.4E+03
37	MSPPNELPA1	MSS MAIN STEAM LINE PIPING EXTERNAL LEAK LARGE	6.0E-10	8.0E-07	1.3E+03
38	EPSCF4CBSO52STL-123	EPS 52/STLA,B,C (BREAKER) SPURIOUS OPEN (CCF)	2.9E-08	3.7E-05	1.3E+03
39	EPSCF4CBSO52STH-123	EPS 52/STHA,B,C (BREAKER) SPURIOUS OPEN (CCF)	2.9E-08	3.7E-05	1.3E+03
40	EPSCF4CBSO52LC-124	EPS 52/LCA,B,C (BREAKER) SPURIOUS OPEN (CCF)	2.9E-08	3.7E-05	1.3E+03
41	RSSPNEL01D	CSS PIPING BETWEEN RWSP AND CSS-MOV-001D EXTERNAL LEAK LARGE	6.0E-10	7.5E-07	1.3E+03
42	HPIPNELSUCTSA	SIS PIPING A BETWEEN RWSP AND SIS-MOV-001A EXTERNAL LEAK LARGE	6.0E-10	7.5E-07	1.3E+03
43	RSSPNEL01C	CSS PIPING BETWEEN RWSP AND CSS-MOV-001C EXTERNAL LEAK LARGE	6.0E-10	7.5E-07	1.3E+03
44	HPIPNELSUCTSB	SIS PIPING B BETWEEN RWSP AND SIS-MOV-001B EXTERNAL LEAK LARGE	6.0E-10	7.5E-07	1.3E+03
45	RSSPNEL01B	CSS PIPING BETWEEN RWSP AND CSS-MOV-001B EXTERNAL LEAK LARGE	6.0E-10	7.5E-07	1.3E+03
46	RSSPNEL01A	CSS PIPING BETWEEN RWSP AND CSS-MOV-001A EXTERNAL LEAK LARGE	6.0E-10	7.5E-07	1.3E+03
47	HPIPNELSUCTSC	SIS PIPING C BETWEEN RWSP AND SIS-MOV-001C EXTERNAL LEAK LARGE	6.0E-10	7.5E-07	1.3E+03

Table 19.1-45 Basic Events (Hardware Failure, Human Error) RAW for LRF (Sheet 4 of 60)

Rank	Basic Event ID	Basic Event Description	Basic Event Probability	FV Importance	RAW
48	HPIPNELSUCTSD	SIS PIPING D BETWEEN RWSP AND SIS-MOV-001D EXTERNAL LEAK LARGE	6.0E-10	7.5E-07	1.3E+03
49	RSSCF4PMAD001-ALL	RHS-MPP-001A,B,C,D (CS/RHR PUMP) FAIL TO START (CCF)	1.9E-05	2.2E-02	1.2E+03
50	RSSCF4PMSR001-ALL	RHS-MPP-001A,B,C,D (CS/RHR PUMP) FAIL TO RUN DURING FIRST HOUR OF OPERATION (CCF)	5.0E-06	5.9E-03	1.2E+03
51	RSSCF4PMLR001-ALL	RHS-MPP-001A,B,C,D (CS/RHR PUMP) FAIL TO RUN AFTER FIRST HOUR OF OPERATION (CCF)	1.7E-06	2.0E-03	1.2E+03
52	RSSCF4RHPR001-ALL	RHS-MHX-001A,B,C,D (CS/RHR HX) PLUG / FOUL (CCF)	4.8E-06	5.6E-03	1.2E+03
53	RSSCF4CVOD004-ALL	RHS-VLV-004A,B,C,D FAIL TO OPEN (CCF)	4.3E-07	5.0E-04	1.2E+03
54	RSSCF4MVOD145-ALL	NCS-MOV-145A,B,C,D FAIL TO OPEN (CCF)	8.4E-05	9.7E-02	1.2E+03
55	EPSCBFO52RAT-ACD	EPS 52/RATA,C,D (BREAKER) FAIL TO OPEN (CCF)	5.2E-06	5.9E-03	1.1E+03
56	EPSCF4CBSC52RAT-134	EPS 52/RATA,C,D (BREAKER) SPURIOUS CLOSE (CCF)	2.9E-08	3.3E-05	1.1E+03
57	EPSCBFO52UAT-ACD	EPS 52/UATA,C,D (BREAKER) FAIL TO OPEN (CCF)	5.2E-06	5.9E-03	1.1E+03
58	EPSCF4CBSC52UAT-134	EPS 52/UATA,C,D (BREAKER) SPURIOUS CLOSE (CCF)	2.9E-08	3.3E-05	1.1E+03
59	EPSCF4CBSO72DB-234	EPS 72/DBA,C,D (BREAKER) SPURIOUS OPEN (CCF)	2.9E-08	3.3E-05	1.1E+03
60	EPSCF4BYFFBAT-123	CLASS-1E BATTERY A, C, D FAIL TO OPERATE (CCF)	1.2E-08	1.4E-05	1.1E+03

Table 19.1-45 Basic Events (Hardware Failure, Human Error) RAW for LRF (Sheet 5 of 60)

Rank	Basic Event ID	Basic Event Description	Basic Event Probability	FV Importance	RAW
61	EPSCF4CBSO72DB-123	EPS 72/DBA,B,C (BREAKER) SPURIOUS OPEN (CCF)	2.9E-08	3.2E-05	1.1E+03
62	EPSCF4BYFFBAT-234	CLASS-1E BATTERY A, B, C FAIL TO OPERATE (CCF)	1.2E-08	1.4E-05	1.1E+03
63	EPSCF4CBSO52STH-234	EPS 52/STHB,C,D (BREAKER) SPURIOUS OPEN (CCF)	2.9E-08	3.1E-05	1.1E+03
64	EPSCF4CBSO52STL-234	EPS 52/STLB,C,D (BREAKER) SPURIOUS OPEN (CCF)	2.9E-08	3.1E-05	1.1E+03
65	EPSCF4CBSO72DB-124	EPS 72/DBA,B,D (BREAKER) SPURIOUS OPEN (CCF)	2.9E-08	2.7E-05	9.4E+02
66	EPSCF4BYFFBAT-134	CLASS-1E BATTERY A, B, D FAIL TO OPERATE (CCF)	1.2E-08	1.2E-05	9.4E+02
67	RTPCF4ICYRRT7001-ALL	SG WATER LEVEL SENSOR (NARROW RANGE) CCF	1.4E-06	9.9E-04	7.3E+02
68	EPSCF4CBSO52LC-134	EPS 52/LCA,B,D (BREAKER) SPURIOUS OPEN (CCF)	2.9E-08	1.8E-05	6.3E+02
69	EPSCBFO52RAT-ABD	EPS 52/RATA,B,D (BREAKER) FAIL TO OPEN (CCF)	5.2E-06	2.8E-03	5.3E+02
70	EPSCBFO52UAT-ABD	EPS 52/UATA,B,D (BREAKER) FAIL TO OPEN (CCF)	5.2E-06	2.8E-03	5.3E+02
71	EPSCF4CBSC52RAT-124	EPS 52/RATA,B,D (BREAKER) SPURIOUS CLOSE (CCF)	2.9E-08	1.6E-05	5.3E+02
72	EPSCF4CBSC52UAT-124	EPS 52/UATA,B,D (BREAKER) SPURIOUS CLOSE (CCF)	2.9E-08	1.6E-05	5.3E+02
73	EPSCF4CBSO72DB-134	EPS 72/DBB,C,D (BREAKER) SPURIOUS OPEN (CCF)	2.9E-08	1.5E-05	5.1E+02

Table 19.1-45 Basic Events (Hardware Failure, Human Error) RAW for LRF (Sheet 6 of 60)

Rank	Basic Event ID	Basic Event Description	Basic Event Probability	FV Importance	RAW
74	EPSCF4BYFFBAT-124	CLASS-1E BATTERY B, C, D FAIL TO OPERATE (CCF)	1.2E-08	6.4E-06	5.1E+02
75	EPSCF4CBSO52STL-14	EPS 52/STLA,D (BREAKER) SPURIOUS OPEN (CCF)	3.4E-08	1.4E-05	4.1E+02
76	EPSCF4CBSO52STH-14	EPS 52/STHA,D (BREAKER) SPURIOUS OPEN (CCF)	3.4E-08	1.4E-05	4.1E+02
77	EFWCF2CVOD008-ALL	EFS-VLV-008A,B FAIL TO OPEN (CCF)	2.4E-06	8.3E-04	3.5E+02
78	EFWCF4CVOD018-ALL	EFS-VLV-018A,B,C,D FAIL TO OPEN (CCF)	1.7E-06	5.8E-04	3.5E+02
79	EFWCF4CVOD012-ALL	EFS-VLV-012A,B,C,D FAIL TO OPEN (CCF)	1.7E-06	5.8E-04	3.5E+02
80	EFWCF4MVFC017-ALL	EFS-MOV-017A,B,C,D FAIL TO CONTROL (CCF)	8.5E-07	2.9E-04	3.5E+02
81	EFWCF4MVFC017-134	EFS-MOV-017B,C,D FAIL TO CONTROL (CCF)	2.8E-07	9.6E-05	3.4E+02
82	EFWCF4MVFC017-234	EFS-MOV-017A,B,C FAIL TO CONTROL (CCF)	2.8E-07	9.6E-05	3.4E+02
83	EFWCF4MVFC017-124	EFS-MOV-017A,C,D FAIL TO CONTROL (CCF)	2.8E-07	9.6E-05	3.4E+02
84	EFWCF4MVFC017-123	EFS-MOV-017A,B,D FAIL TO CONTROL (CCF)	2.8E-07	9.6E-05	3.4E+02
85	EFWXVEL006A	EFS-VLV-006A EXTERNAL LEAK LARGE	7.2E-08	2.3E-05	3.3E+02
86	EFWXVEL006B	EFS-VLV-006B EXTERNAL LEAK LARGE	7.2E-08	2.3E-05	3.3E+02
87	EFWCF4CVOD018-134	EFS-VLV-018A,B,D FAIL TO OPEN (CCF)	6.2E-08	2.0E-05	3.2E+02
88	EFWCF4CVOD018-124	EFS-VLV-018A,B,C FAIL TO OPEN (CCF)	6.2E-08	2.0E-05	3.2E+02
89	EFWCF4CVOD018-123	EFS-VLV-018B,C,D FAIL TO OPEN (CCF)	6.2E-08	2.0E-05	3.2E+02
90	EFWCF4CVOD018-234	EFS-VLV-018A,C,D FAIL TO OPEN (CCF)	6.2E-08	2.0E-05	3.2E+02
91	SGNBTSWCCF3	NON-SAFETY (PCMS) APPLICATION SOFTWARE CCF	1.0E-04	3.2E-02	3.2E+02

Table 19.1-45 Basic Events (Hardware Failure, Human Error) RAW for LRF (Sheet 7 of 60)

Rank	Basic Event ID	Basic Event Description	Basic Event Probability	FV Importance	RAW
92	EPSCF4CBSO52LC-34	EPS 52/LCA,D (BREAKER) SPURIOUS OPEN (CCF)	3.4E-08	1.0E-05	3.0E+02
93	RTPCF4AXFFRT-ALL	REACTOR TRIP BREAKER A1,A2,B1,B2,C1,C2,D1,D2 (CCF)	2.4E-06	6.2E-04	2.6E+02
94	EPSCBFO52RAT-BCD	EPS 52/RATB,C,D (BREAKER) FAIL TO OPEN (CCF)	5.2E-06	1.1E-03	2.2E+02
95	EPSCF4CBSC52RAT-234	EPS 52/RATB,C,D (BREAKER) SPURIOUS CLOSE (CCF)	2.9E-08	6.4E-06	2.2E+02
96	EPSCBFO52UAT-BCD	EPS 52/UATB,C,D (BREAKER) FAIL TO OPEN (CCF)	5.2E-06	1.1E-03	2.2E+02
97	EPSCF4CBSC52UAT-234	EPS 52/UATB,C,D (BREAKER) SPURIOUS CLOSE (CCF)	2.9E-08	6.4E-06	2.2E+02
98	EPSCF4CBSO52LC-23	EPS 52/LCC,D (BREAKER) SPURIOUS OPEN (CCF)	3.4E-08	6.9E-06	2.1E+02
99	EPSCF4CBSO52STH-24	EPS 52/STHC,D (BREAKER) SPURIOUS OPEN (CCF)	3.4E-08	6.8E-06	2.0E+02
100	EPSCF4CBSO52STL-34	EPS 52/STLC,D (BREAKER) SPURIOUS OPEN (CCF)	3.4E-08	6.8E-06	2.0E+02
101	SWSCF4PMBD001-R-ALL	EWS-MPP-001A,B,C,D (ESW PUMP) FAIL TO RE-START (CCF)	4.8E-05	8.5E-03	1.8E+02
102	CWSCF4PCBD001-R-ALL	NCS-MPP-001A,B,C,D (CCW PUMP) FAIL TO RE-START (CCF)	2.6E-05	4.7E-03	1.8E+02
103	EPSCBFO52RAT-CD	EPS 52/RATC,D (BREAKER) FAIL TO OPEN (CCF)	5.0E-06	8.2E-04	1.7E+02
104	EPSCF4CBSC52RAT-34	EPS 52/RATC,D (BREAKER) SPURIOUS CLOSE (CCF)	3.4E-08	5.6E-06	1.7E+02

Table 19.1-45 Basic Events (Hardware Failure, Human Error) RAW for LRF (Sheet 8 of 60)

Rank	Basic Event ID	Basic Event Description	Basic Event Probability	FV Importance	RAW
105	EPSCBFO52UAT-CD	EPS 52/UATC,D (BREAKER) FAIL TO OPEN (CCF)	5.0E-06	8.2E-04	1.7E+02
106	EPSCF4CBSC52UAT-34	EPS 52/UATC,D (BREAKER) SPURIOUS CLOSE (CCF)	3.4E-08	5.6E-06	1.7E+02
107	SWSCF4CVOD502-R-ALL	EWS-VLV-502A,B,C,D FAIL TO RE-OPEN (CCF)	1.5E-07	2.5E-05	1.7E+02
108	SWSCF4CVOD602-R-ALL	EWS-VLV-602A,B,C,D FAIL TO RE-OPEN (CCF)	1.5E-07	2.5E-05	1.7E+02
109	CWSCF4CVOD016-R-ALL	NCS-VLV-016A,B,C,D FAIL TO RE-OPEN (CCF)	1.5E-07	2.5E-05	1.7E+02
110	EPSCBFO52RAT-ALL	EPS 52/RATA,B,C,D (BREAKER) FAIL TO OPEN (CCF)	2.0E-05	3.2E-03	1.6E+02
111	EPSCBFO52UAT-ALL	EPS 52/UATA,B,C,D (BREAKER) FAIL TO OPEN (CCF)	2.0E-05	3.2E-03	1.6E+02
112	EPSCF4IVFFIBC-ALL	CLASS-1E UPS UNIT A,B,C,D FAIL TO OPERATE (CCF)	1.5E-06	2.3E-04	1.6E+02
113	EPSCF4CBSO72AU-ALL	EPS 72/AUA,B,C,D (BREAKER) SPURIOUS OPEN (CCF)	1.6E-07	2.3E-05	1.5E+02
114	EPSCF4CBSO52UA-ALL	EPS 52/UAA,B,C,D (BREAKER) SPURIOUS OPEN (CCF)	1.6E-07	2.3E-05	1.5E+02
115	EPSCF4DLLRGTG-ALL	CLASS-1E GTG A,B,C,D FAIL TO RUN AFTER FIRST HOUR OF OPERATION (CCF)	9.9E-04	1.4E-01	1.5E+02
116	EPSCF4DLADGTG-ALL	CLASS-1E GTG A,B,C,D FAIL TO START (CCF)	2.1E-04	3.1E-02	1.5E+02

Table 19.1-45 Basic Events (Hardware Failure, Human Error) RAW for LRF (Sheet 9 of 60)

Rank	Basic Event ID	Basic Event Description	Basic Event Probability	FV Importance	RAW
117	EPSCF4DLSRGTG-ALL	CLASS-1E GTG A,B,C,D FAIL TO RUN DURING FIRST HOUR OF OPERATION (CCF)	1.6E-04	2.3E-02	1.5E+02
118	EPSCF4SEFFGTG-ALL	CLASS-1E GTG A,B,C,D SEQUENCER FAIL TO OPERATE (CCF)	3.8E-05	5.4E-03	1.5E+02
119	EPSCF4CBFC52EPS-ALL	EPS 52/EPSA,B,C,D (BREAKER) FAIL TO CLOSE (CCF)	2.0E-05	2.9E-03	1.5E+02
120	EPSCF4CBSO52EPS-ALL	EPS 52/EPSA,B,C,D (BREAKER) SPURIOUS OPEN (CCF)	1.6E-07	2.3E-05	1.5E+02
121	EPSCF2CBSO52LC1-ALL	EPS 52/LCA1,D1 (BREAKER) SPURIOUS CLOSE (CCF)	2.8E-07	4.0E-05	1.4E+02
122	EPSCF2CBSO52LL2-ALL	EPS 52/LLDA,LLDD (BREAKER) SPURIOUS OPEN (CCF)	2.8E-07	4.0E-05	1.4E+02
123	EPSCF2CBSO52LL1-ALL	EPS 52/LLAA,LLAD (BREAKER) SPURIOUS OPEN (CCF)	2.8E-07	4.0E-05	1.4E+02
124	EPSCF4IVFFMVI-ALL	MOV INVERTER A1,B,C,D1 FAIL TO OPERATE (CCF)	1.5E-06	2.1E-04	1.4E+02
125	HPIPMEL001C	SIS-MPP-001C (C-SI PUMP) EXTERNAL LEAK LARGE	1.9E-07	2.4E-05	1.3E+02
126	RSSPMEL001C	RHS-MPP-001C (C-CS/RHR PUMP) EXTERNAL LEAK LARGE	1.9E-07	2.4E-05	1.3E+02
127	EFWCF4MVFC017-14	EFS-MOV-017C,D FAIL TO CONTROL (CCF)	5.6E-07	6.4E-05	1.1E+02
128	EFWCF4CVOD018-23	EFS-VLV-018C,D FAIL TO OPEN (CCF)	2.3E-07	2.5E-05	1.1E+02
129	EFWCF4MVFC017-13	EFS-MOV-017B,D FAIL TO CONTROL (CCF)	5.6E-07	6.2E-05	1.1E+02

Table 19.1-45 Basic Events (Hardware Failure, Human Error) RAW for LRF (Sheet 10 of 60)

Rank	Basic Event ID	Basic Event Description	Basic Event Probability	FV Importance	RAW
130	EFWCF4MVFC017-34	EFS-MOV-017B,C FAIL TO CONTROL (CCF)	5.6E-07	6.2E-05	1.1E+02
131	EFWCF4CVOD018-12	EFS-VLV-018B,C FAIL TO OPEN (CCF)	2.3E-07	2.4E-05	1.1E+02
132	EFWCF4CVOD018-13	EFS-VLV-018B,D FAIL TO OPEN (CCF)	2.3E-07	2.4E-05	1.1E+02
133	EPSCF4CBSO52STH-34	EPS 52/STHB,D (BREAKER) SPURIOUS OPEN (CCF)	3.4E-08	3.4E-06	1.0E+02
134	EPSCF4CBSO52STL-24	EPS 52/STLB,D (BREAKER) SPURIOUS OPEN (CCF)	3.4E-08	3.4E-06	1.0E+02
135	EPSCF4CBSO52LC-13	EPS 52/LCB,D (BREAKER) SPURIOUS OPEN (CCF)	3.4E-08	3.4E-06	1.0E+02
136	RWSCF4SUPR001-123	SIS-SST-001B,C,D (ESS/CS STRAINER) PLUG DURING OPERA-TION (CCF)	3.7E-06	3.6E-04	9.9E+01
137	EPSCBFO52RAT-AD	EPS 52/RATA,D (BREAKER) FAIL TO OPEN (CCF)	5.0E-06	4.1E-04	8.4E+01
138	EPSCBFO52UAT-AD	EPS 52/UATA,D (BREAKER) FAIL TO OPEN (CCF)	5.0E-06	4.1E-04	8.4E+01
139	EPSCF4CBSC52UAT-14	EPS 52/UATA,D (BREAKER) SPURIOUS CLOSE (CCF)	3.4E-08	2.8E-06	8.4E+01
140	EPSCF4CBSC52RAT-14	EPS 52/RATA,D (BREAKER) SPURIOUS CLOSE (CCF)	3.4E-08	2.8E-06	8.4E+01
141	RWSCF4SUPR001-234	SIS-SST-001A,C,D (ESS/CS STRAINER) PLUG DURING OPERA-TION (CCF)	3.7E-06	2.9E-04	8.0E+01
142	HPIPMEL001D	SIS-MPP-001D (D-SI PUMP) EXTERNAL LEAK LARGE	1.9E-07	1.4E-05	7.6E+01
143	RSSPMEL001D	RHS-MPP-001D (D-CS/RHR PUMP) EXTERNAL LEAK LARGE	1.9E-07	1.4E-05	7.6E+01
144	CFACVEL012	CSS-VLV-012 EXTERNAL LEAK LARGE	4.8E-08	3.4E-06	7.3E+01

Table 19.1-45 Basic Events (Hardware Failure, Human Error) RAW for LRF (Sheet 11 of 60)

Rank	Basic Event ID	Basic Event Description	Basic Event Probability	FV Importance	RAW
145	RSSRIEL001A	RHS-MHX-001A (A-CS/RHR HX) TUBE EXTERNAL LEAK LARGE	7.2E-07	5.2E-05	7.3E+01
146	RSSRIEL001D	RHS-MHX-001D (D-CS/RHR HX) TUBE EXTERNAL LEAK LARGE	7.2E-07	5.2E-05	7.3E+01
147	RSSXVEL013D	RHS-VLV-013D EXTERNAL LEAK LARGE	7.2E-08	5.2E-06	7.3E+01
148	RSSXVEL013A	RHS-VLV-013A EXTERNAL LEAK LARGE	7.2E-08	5.2E-06	7.3E+01
149	RSSCVEL004D	RHS-VLV-004D EXTERNAL LEAK LARGE	4.8E-08	3.4E-06	7.3E+01
150	RSSCVEL004A	RHS-VLV-004A EXTERNAL LEAK LARGE	4.8E-08	3.4E-06	7.3E+01
151	RSSRIEL001C	RHS-MHX-001C (C-CS/RHR HX) TUBE EXTERNAL LEAK LARGE	7.2E-07	5.1E-05	7.3E+01
152	RSSXVEL013C	RHS-VLV-013C EXTERNAL LEAK LARGE	7.2E-08	5.1E-06	7.3E+01
153	RSSCVEL004C	RHS-VLV-004C EXTERNAL LEAK LARGE	4.8E-08	3.4E-06	7.3E+01
154	RSSRIEL001B	RHS-MHX-001B (B-CS/RHR HX) TUBE EXTERNAL LEAK LARGE	7.2E-07	5.1E-05	7.2E+01
155	RSSXVEL013B	RHS-VLV-013B EXTERNAL LEAK LARGE	7.2E-08	5.1E-06	7.2E+01
156	RSSCVEL004B	RHS-VLV-004B EXTERNAL LEAK LARGE	4.8E-08	3.4E-06	7.2E+01
157	RWSCF4SUPR001-124	SIS-SST-001A,B,C (ESS/CS STRAINER) PLUG DURING OPERATION (CCF)	3.7E-06	2.6E-04	7.2E+01
158	HPIPMEL001A	SIS-MPP-001A (A-SI PUMP) EXTERNAL LEAK LARGE	1.9E-07	1.4E-05	7.2E+01
159	RSSPMEL001A	RHS-MPP-001A (A-CS/RHR PUMP) EXTERNAL LEAK LARGE	1.9E-07	1.4E-05	7.1E+01
160	HPIPMEL001B	SIS-MPP-001B (B-SI PUMP) EXTERNAL LEAK LARGE	1.9E-07	1.4E-05	7.1E+01
161	RSSPMEL001B	RHS-MPP-001B (B-CS/RHR PUMP) EXTERNAL LEAK LARGE	1.9E-07	1.3E-05	7.1E+01

Table 19.1-45 Basic Events (Hardware Failure, Human Error) RAW for LRF (Sheet 12 of 60)

Rank	Basic Event ID	Basic Event Description	Basic Event Probability	FV Importance	RAW
162	RWSPMEL001B	RWS-MPP-001B (B-RWR PUMP) EXTERNAL LEAK LARGE	1.9E-07	1.3E-05	7.0E+01
163	RWSPMEL001A	RWS-MPP-001A (A-RWR PUMP) EXTERNAL LEAK LARGE	1.9E-07	1.3E-05	7.0E+01
164	RWSXVEL014	RWS-VLV-014 EXTERNAL LEAK LARGE	7.2E-08	5.0E-06	7.0E+01
165	RWSXVEL013A	RWS-VLV-013A EXTERNAL LEAK LARGE	7.2E-08	5.0E-06	7.0E+01
166	RWSXVEL006A	RWS-VLV-006A EXTERNAL LEAK LARGE	7.2E-08	5.0E-06	7.0E+01
167	RWSXVEL021	RWS-VLV-021 EXTERNAL LEAK LARGE	7.2E-08	5.0E-06	7.0E+01
168	RWSXVEL006B	RWS-VLV-006B EXTERNAL LEAK LARGE	7.2E-08	5.0E-06	7.0E+01
169	RWSXVEL066A	NCS-VLV-066A EXTERNAL LEAK LARGE	7.2E-08	5.0E-06	7.0E+01
170	RWSXVEL066B	NCS-VLV-066B EXTERNAL LEAK LARGE	7.2E-08	5.0E-06	7.0E+01
171	RWSXVEL005	RWS-VLV-005 EXTERNAL LEAK LARGE	7.2E-08	5.0E-06	7.0E+01
172	RWSXVEL101	RWS-VLV-101 EXTERNAL LEAK LARGE	7.2E-08	5.0E-06	7.0E+01
173	RWSXVEL028	SFS-VLV-028 EXTERNAL LEAK LARGE	7.2E-08	5.0E-06	7.0E+01
174	RWSXVEL013B	RWS-VLV-013B EXTERNAL LEAK LARGE	7.2E-08	5.0E-06	7.0E+01
175	RWSXVEL103A	SFS-VLV-103A EXTERNAL LEAK LARGE	7.2E-08	5.0E-06	7.0E+01
176	RWSXVEL103B	SFS-VLV-103B EXTERNAL LEAK LARGE	7.2E-08	5.0E-06	7.0E+01
177	RWSCVEL037	LMS-VLV-037 EXTERNAL LEAK LARGE	4.8E-08	3.3E-06	7.0E+01
178	RWSCVEL065A	NCS-VLV-065A EXTERNAL LEAK LARGE	4.8E-08	3.3E-06	7.0E+01
179	RWSCVEL065B	NCS-VLV-065B EXTERNAL LEAK LARGE	4.8E-08	3.3E-06	7.0E+01
180	RWSCVEL027	SFS-VLV-027 EXTERNAL LEAK LARGE	4.8E-08	3.3E-06	7.0E+01
181	RWSCVEL012A	RWS-VLV-012A EXTERNAL LEAK LARGE	4.8E-08	3.3E-06	7.0E+01
182	RWSCVEL012B	RWS-VLV-012B EXTERNAL LEAK LARGE	4.8E-08	3.3E-06	7.0E+01
183	RWSPNELPIPE4	RWS PIPING BETWEEN RWS-VLV-004 AND RWSAT EXTERNAL LEAK LARGE	6.0E-10	4.2E-08	7.0E+01
184	RSSXVEL002B	CSS-VLV-002B EXTERNAL LEAK LARGE	7.2E-08	5.0E-06	7.0E+01
185	RSSMVEL004B	CSS-MOV-004B EXTERNAL LEAK LARGE	2.4E-08	1.7E-06	7.0E+01

Table 19.1-45 Basic Events (Hardware Failure, Human Error) RAW for LRF (Sheet 13 of 60)

Rank	Basic Event ID	Basic Event Description	Basic Event Probability	FV Importance	RAW
186	RSSXVEL002A	CSS-VLV-002A EXTERNAL LEAK LARGE	7.2E-08	4.9E-06	6.9E+01
187	RSSXVEL002C	CSS-VLV-002C EXTERNAL LEAK LARGE	7.2E-08	4.9E-06	6.9E+01
188	RSSXVEL002D	CSS-VLV-002D EXTERNAL LEAK LARGE	7.2E-08	4.9E-06	6.9E+01
189	RSSMVEL004A	CSS-MOV-004A EXTERNAL LEAK LARGE	2.4E-08	1.6E-06	6.9E+01
190	RSSMVEL004D	CSS-MOV-004D EXTERNAL LEAK LARGE	2.4E-08	1.6E-06	6.9E+01
191	RSSMVEL004C	CSS-MOV-004C EXTERNAL LEAK LARGE	2.4E-08	1.6E-06	6.9E+01
192	HPICVEL004C	SIS-VLV-004C EXTERNAL LEAK LARGE	4.8E-08	3.2E-06	6.8E+01
193	HPICVEL004B	SIS-VLV-004B EXTERNAL LEAK LARGE	4.8E-08	3.2E-06	6.8E+01
194	HPICVEL004A	SIS-VLV-004A EXTERNAL LEAK LARGE	4.8E-08	3.2E-06	6.8E+01
195	HPICVEL004D	SIS-VLV-004D EXTERNAL LEAK LARGE	4.8E-08	3.2E-06	6.8E+01
196	HPIMVEL009A	SIS-MOV-009A EXTERNAL LEAK LARGE	2.4E-08	1.6E-06	6.8E+01
197	HPIMVEL009D	SIS-MOV-009D EXTERNAL LEAK LARGE	2.4E-08	1.6E-06	6.8E+01
198	HPIMVEL009C	SIS-MOV-009C EXTERNAL LEAK LARGE	2.4E-08	1.6E-06	6.8E+01
199	HPIMVEL009B	SIS-MOV-009B EXTERNAL LEAK LARGE	2.4E-08	1.6E-06	6.8E+01
200	HPIPNELINJSB	SIS B-SI PUMP DISCHARGE LINE (OUTSIDE C/V) PIPING EXTERNAL LEAK LARGE	6.0E-10	4.0E-08	6.8E+01
201	HPIPNELINJSA	SIS A-SI PUMP DISCHARGE LINE (OUTSIDE C/V) PIPING EXTERNAL LEAK LARGE	6.0E-10	4.0E-08	6.8E+01
202	HPIPNELINJSC	SIS C-SI PUMP DISCHARGE LINE (OUTSIDE C/V) PIPING EXTERNAL LEAK LARGE	6.0E-10	4.0E-08	6.8E+01
203	HPIPNELINJSD	SIS D-SI PUMP DISCHARGE LINE (OUTSIDE C/V) PIPING EXTERNAL LEAK LARGE	6.0E-10	4.0E-08	6.8E+01
204	RSSXVEL034A	RHS-VLV-034A EXTERNAL LEAK LARGE	7.2E-08	4.8E-06	6.8E+01

Table 19.1-45 Basic Events (Hardware Failure, Human Error) RAW for LRF (Sheet 14 of 60)

Rank	Basic Event ID	Basic Event Description	Basic Event Probability	FV Importance	RAW
205	RSSXVEL031D	RHS-VLV-031D EXTERNAL LEAK LARGE	7.2E-08	4.8E-06	6.8E+01
206	RSSXVEL034D	RHS-VLV-034D EXTERNAL LEAK LARGE	7.2E-08	4.8E-06	6.8E+01
207	RSSXVEL031A	RHS-VLV-031A EXTERNAL LEAK LARGE	7.2E-08	4.8E-06	6.8E+01
208	EPSCF4IVFFIBC-124	CLASS-1E UPS UNIT A,C,D FAIL TO OPERATE (CCF)	5.0E-07	3.3E-05	6.8E+01
209	RSSMVEL021B	RHS-MOV-021B EXTERNAL LEAK LARGE	2.4E-08	1.5E-06	6.4E+01
210	RSSMVEL021A	RHS-MOV-021A EXTERNAL LEAK LARGE	2.4E-08	1.5E-06	6.4E+01
211	RSSMVEL021C	RHS-MOV-021C EXTERNAL LEAK LARGE	2.4E-08	1.5E-06	6.4E+01
212	RSSMVEL021D	RHS-MOV-021D EXTERNAL LEAK LARGE	2.4E-08	1.5E-06	6.4E+01
213	RWSMVEL004	RWS-MOV-004 EXTERNAL LEAK LARGE	2.4E-08	1.5E-06	6.4E+01
214	RWSPNELPIPE3	RWS PIPING BETWEEN RWS-VLV-002 AND RWS-VLV-004 EXTERNAL LEAK LARGE	6.0E-10	3.8E-08	6.4E+01
215	EPSCBFO52UAT-ABC	EPS 52/UATA,B,C (BREAKER) FAIL TO OPEN (CCF)	5.2E-06	3.3E-04	6.4E+01
216	EPSCBFO52RAT-ABC	EPS 52/RATA,B,C (BREAKER) FAIL TO OPEN (CCF)	5.2E-06	3.3E-04	6.4E+01
217	EPSCF4CBSC52RAT-123	EPS 52/RATA,B,C (BREAKER) SPURIOUS CLOSE (CCF)	2.9E-08	1.8E-06	6.4E+01
218	EPSCF4CBSC52UAT-123	EPS 52/UATA,B,C (BREAKER) SPURIOUS CLOSE (CCF)	2.9E-08	1.8E-06	6.4E+01
219	RSSCF4PMAD001-123	RHS-MPP-001A,C,D (CS/RHR PUMP) FAIL TO START (CCF)	6.3E-06	3.9E-04	6.3E+01
220	SWSCF2PMYR001AC-ALL	EWS-MPP-001A,C (ESW PUMP) FAIL TO RUN (CCF)	8.9E-06	5.5E-04	6.2E+01

Table 19.1-45 Basic Events (Hardware Failure, Human Error) RAW for LRF (Sheet 15 of 60)

Rank	Basic Event ID	Basic Event Description	Basic Event Probability	FV Importance	RAW
221	RSSCF4PMSR001-234	RHS-MPP-001A,C,D (CS/RHR PUMP) FAIL TO RUN DURING FIRST HOUR OF OPERATION (CCF)	1.7E-06	1.0E-04	6.1E+01
222	RSSCF4MVOD145-234	NCS-MOV-145A,C,D FAIL TO OPEN (CCF)	1.5E-06	8.6E-05	6.0E+01
223	ACCCF4CVOD103-ALL	SIS-VLV-103A,B,C,D FAIL TO OPEN (CCF)	1.0E-06	6.0E-05	6.0E+01
224	ACCCF4CVOD102-ALL	SIS-VLV-102A,B,C,D FAIL TO OPEN (CCF)	1.0E-06	6.0E-05	6.0E+01
225	ACCCF4CVOD102-234	SIS-VLV-102B,C,D FAIL TO OPEN (CCF)	2.7E-07	1.6E-05	6.0E+01
226	ACCCF4CVOD103-124	SIS-VLV-103A,B,D FAIL TO OPEN (CCF)	2.7E-07	1.6E-05	6.0E+01
227	ACCCF4CVOD102-124	SIS-VLV-102A,B,D FAIL TO OPEN (CCF)	2.7E-07	1.6E-05	6.0E+01
228	ACCCF4CVOD103-123	SIS-VLV-103A,B,C FAIL TO OPEN (CCF)	2.7E-07	1.6E-05	6.0E+01
229	ACCCF4CVOD102-134	SIS-VLV-102A,C,D FAIL TO OPEN (CCF)	2.7E-07	1.6E-05	6.0E+01
230	ACCCF4CVOD103-234	SIS-VLV-103B,C,D FAIL TO OPEN (CCF)	2.7E-07	1.6E-05	6.0E+01
231	ACCCF4CVOD102-123	SIS-VLV-102A,B,C FAIL TO OPEN (CCF)	2.7E-07	1.6E-05	6.0E+01
232	ACCCF4CVOD103-134	SIS-VLV-103A,C,D FAIL TO OPEN (CCF)	2.7E-07	1.6E-05	6.0E+01
233	ACCCF4CVOD103-14	SIS-VLV-103A,D FAIL TO OPEN (CCF)	1.6E-07	9.5E-06	6.0E+01
234	ACCCF4CVOD102-24	SIS-VLV-102B,D FAIL TO OPEN (CCF)	1.6E-07	9.5E-06	6.0E+01
235	ACCCF4CVOD102-34	SIS-VLV-102C,D FAIL TO OPEN (CCF)	1.6E-07	9.5E-06	6.0E+01
236	ACCCF4CVOD103-12	SIS-VLV-103A,B FAIL TO OPEN (CCF)	1.6E-07	9.5E-06	6.0E+01
237	ACCCF4CVOD102-23	SIS-VLV-102B,C FAIL TO OPEN (CCF)	1.6E-07	9.5E-06	6.0E+01
238	ACCCF4CVOD103-24	SIS-VLV-103B,D FAIL TO OPEN (CCF)	1.6E-07	9.5E-06	6.0E+01
239	RSSCF4PMAD001-134	RHS-MPP-001A,B,C (CS/RHR PUMP) FAIL TO START (CCF)	6.3E-06	3.6E-04	5.8E+01
240	RSSAVEL021	RHS-FCV-021 EXTERNAL LEAK LARGE	2.2E-08	1.2E-06	5.7E+01
241	RSSAVEL033	RHS-HCV-033 EXTERNAL LEAK LARGE	2.2E-08	1.2E-06	5.7E+01
242	RSSAVEL023	RHS-HCV-023 EXTERNAL LEAK LARGE	2.2E-08	1.2E-06	5.7E+01
243	RSSAVEL031	RHS-FCV-031 EXTERNAL LEAK LARGE	2.2E-08	1.2E-06	5.7E+01

Table 19.1-45 Basic Events (Hardware Failure, Human Error) RAW for LRF (Sheet 16 of 60)

Rank	Basic Event ID	Basic Event Description	Basic Event Probability	FV Importance	RAW
244	RSSCF4PMLR001-234	RHS-MPP-001A,C,D (CS/RHR PUMP) FAIL TO RUN AFTER FIRST HOUR OF OPERATION (CCF)	5.8E-07	3.2E-05	5.7E+01
245	RSSCF4PMSR001-124	RHS-MPP-001A,B,C (CS/RHR PUMP) FAIL TO RUN DURING FIRST HOUR OF OPERATION (CCF)	1.7E-06	9.2E-05	5.6E+01
246	RSSCF4MVOD145-124	NCS-MOV-145A,B,C FAIL TO OPEN (CCF)	1.5E-06	7.8E-05	5.5E+01
247	RSSCF4CVOD004-234	RHS-VLV-004A,C,D FAIL TO OPEN (CCF)	2.2E-07	1.2E-05	5.3E+01
248	RSSCF4RHPR001-234	RHS-MHX-001A,C,D (CS/RHR HX) PLUG / FOUL (CCF)	6.4E-08	3.3E-06	5.3E+01
249	CWSCF2PCYR001AC-ALL	NCS-MPP-001A,C (CCW PUMP) FAIL TO RUN (CCF)	5.0E-06	2.6E-04	5.3E+01
250	RSSCF4PMLR001-124	RHS-MPP-001A,B,C (CS/RHR PUMP) FAIL TO RUN AFTER FIRST HOUR OF OPERATION (CCF)	5.8E-07	2.9E-05	5.1E+01
251	SGNOO04ICVR12	(HE) MISCALIBRATION OF C/V PRESSURE SENSORS A,B,C,D	6.7E-05	3.2E-03	4.9E+01
252	SGNCF4ICVR0012-ALL	CONTAINMENT PRESSURE SENSOR CCF	1.3E-06	6.2E-05	4.9E+01
253	RSSCF4MVOD004-ALL	CSS-MOV-004A,B,C,D FAIL TO OPEN (CCF)	8.4E-05	4.0E-03	4.8E+01
254	RSSCF4CVOD004-124	RHS-VLV-004A,B,C FAIL TO OPEN (CCF)	2.2E-07	1.1E-05	4.8E+01
255	RSSCF4RHPR001-124	RHS-MHX-001A,B,C (CS/RHR HX) PLUG / FOUL (CCF)	6.4E-08	3.0E-06	4.8E+01
256	EPSCF4IVFFIBC-123	CLASS-1E UPS UNIT A,B,D FAIL TO OPERATE (CCF)	5.0E-07	2.4E-05	4.8E+01
257	SGNCF4ICVR0012-234	CONTAINMENT PRESSURE SENSOR P10012B,P10012C,P10012D CCF	4.3E-07	2.0E-05	4.8E+01

Table 19.1-45 Basic Events (Hardware Failure, Human Error) RAW for LRF (Sheet 17 of 60)

Rank	Basic Event ID	Basic Event Description	Basic Event Probability	FV Importance	RAW
258	SGNCF4ICVR0012-123	CONTAINMENT PRESSURE SENSOR P10012A,P10012B,P10012C CCF	4.3E-07	2.0E-05	4.8E+01
259	SGNCF4ICVR0012-134	CONTAINMENT PRESSURE SENSOR P10012A,P10012C,P10012D CCF	4.3E-07	2.0E-05	4.8E+01
260	SGNCF4ICVR0012-124	CONTAINMENT PRESSURE SENSOR P10012A,P10012B,P10012D CCF	4.3E-07	2.0E-05	4.8E+01
261	EPSBSFFMCD	D-CLASS 1E 6.9KV SWITCHGEAR FAILURE	5.8E-06	2.6E-04	4.7E+01
262	EPSBSFFDCCD	D-CLASS 1E DC SWITCHBOARD	5.8E-06	2.6E-04	4.6E+01
263	MSPSVCD509A	MSS-SRV-509A FAIL TO RE-CLOSE	7.0E-05	3.1E-03	4.5E+01
264	MSPSVCD510A	MSS-SRV-510A FAIL TO RE-CLOSE	7.0E-05	3.1E-03	4.5E+01
265	MSPSVOM510A	MSS-SRV-510A SPURIOUS OPEN	4.8E-06	2.1E-04	4.5E+01
266	MSPSVOM509A	MSS-SRV-509A SPURIOUS OPEN	4.8E-06	2.1E-04	4.5E+01
267	EPSCF4CBSO52UA-124	EPS 52/UAA,C,D (BREAKER) SPURIOUS OPEN (CCF)	2.9E-08	1.2E-06	4.2E+01
268	EPSCF4CBSO72AU-124	EPS 72/AUA,C,D (BREAKER) SPURIOUS OPEN (CCF)	2.9E-08	1.2E-06	4.2E+01
269	RSSCF4CVOD005-ALL	CSS-VLV-005A,B,C,D FAIL TO OPEN (CCF)	4.3E-07	1.5E-05	3.7E+01
270	EPSCF2DLLRAAC-ALL	AAC A,B FAIL TO RUN AFTER FIRST HOUR OF OPERATION (CCF)	1.5E-03	4.5E-02	3.2E+01
271	EPSCF2DLADAAC-ALL	AAC A,B FAIL TO START (CCF)	3.1E-04	9.3E-03	3.2E+01
272	EPSCF2DLSRAAC-ALL	AAC A,B FAIL TO RUN DURING FIRST HOUR OF OPERATION (CCF)	2.3E-04	7.1E-03	3.2E+01
273	EPSCF2SEFFAAC-ALL	AAC A,B SEQUENCER FAIL TO OPERATE (CCF)	1.4E-04	4.3E-03	3.2E+01
274	EPSCF2CBFC52AAC2-ALL	EPS 52/AACAP,52/AACBP (BREAKER) FAIL TO CLOSE (CCF)	2.8E-05	8.7E-04	3.2E+01

Table 19.1-45 Basic Events (Hardware Failure, Human Error) RAW for LRF (Sheet 18 of 60)

Rank	Basic Event ID	Basic Event Description	Basic Event Probability	FV Importance	RAW
275	EPSCF2CBSO5AAC2-ALL	EPS 52/AACAP,52/AACBP (BREAKER) SPURIOUS OPEN (CCF)	2.8E-07	8.7E-06	3.2E+01
276	EPSCF4DLLRGTG-234	CLASS-1E GTG A,C,D FAIL TO RUN AFTER FIRST HOUR OF OPERATION (CCF)	2.5E-04	7.6E-03	3.1E+01
277	EPSCF4DLADGTG-134	CLASS-1E GTG A,C,D FAIL TO START (CCF)	5.2E-05	1.6E-03	3.1E+01
278	EPSCF4DLSRGTG-234	CLASS-1E GTG A,C,D FAIL TO RUN DURING FIRST HOUR OF OPERATION (CCF)	3.9E-05	1.2E-03	3.1E+01
279	EPSCF4SEFFGTG-234	CLASS-1E GTG A,C,D SEQUENCER FAIL TO OPERATE (CCF)	1.3E-05	3.8E-04	3.1E+01
280	EPSCF4CBFC52EPS-123	EPS 52/EPSA,C,D (BREAKER) FAIL TO CLOSE (CCF)	5.2E-06	1.6E-04	3.1E+01
281	EPSCF4CBSO52EPS-234	EPS 52/EPSA,C,D (BREAKER) SPURIOUS OPEN (CCF)	2.9E-08	8.9E-07	3.1E+01
282	EPPBTSWCCF	BO-SIGNAL (TRAIN P1,2) SOFTWARE CCF	1.0E-04	3.0E-03	3.1E+01
283	EPPBTHWCCF	BO-SIGNAL (TRAIN P1,2) HARDWARE CCF	2.1E-06	6.5E-05	3.1E+01
284	EPSCF4CBSO72DB-24	EPS 72/DBA,D (BREAKER) SPURIOUS OPEN (CCF)	3.4E-08	9.6E-07	3.0E+01
285	EPSCF4BYFFBAT-13	CLASS-1E BATTERY A, D FAIL TO OPERATE (CCF)	1.9E-08	5.4E-07	3.0E+01
286	CWSCF2RHP001AC-ALL	NCS-MHX-001A,C (CCW HX) PLUG / FOUL (CCF)	6.8E-08	1.8E-06	2.7E+01
287	EPSCF4CBSO72AU-123	EPS 72/AUA,B,D (BREAKER) SPURIOUS OPEN (CCF)	2.9E-08	7.3E-07	2.6E+01
288	EPSCF4CBSO52UA-123	EPS 52/UAA,B,D (BREAKER) SPURIOUS OPEN (CCF)	2.9E-08	7.3E-07	2.6E+01

Table 19.1-45 Basic Events (Hardware Failure, Human Error) RAW for LRF (Sheet 19 of 60)

Rank	Basic Event ID	Basic Event Description	Basic Event Probability	FV Importance	RAW
289	RSSCF4PMAD001-124	RHS-MPP-001B,C,D (CS/RHR PUMP) FAIL TO START (CCF)	6.3E-06	1.5E-04	2.5E+01
290	RSSCF4PMSR001-123	RHS-MPP-001B,C,D (CS/RHR PUMP) FAIL TO RUN DURING FIRST HOUR OF OPERATION (CCF)	1.7E-06	3.9E-05	2.4E+01
291	RSSCF4MVOD145-123	NCS-MOV-145B,C,D FAIL TO OPEN (CCF)	1.5E-06	3.4E-05	2.4E+01
292	MSROO02515A	(HE) FAIL TO CLOSE MSS-SMV-515A	2.6E-03	5.9E-02	2.4E+01
293	RSSCF4PMLR001-123	RHS-MPP-001B,C,D (CS/RHR PUMP) FAIL TO RUN AFTER FIRST HOUR OF OPERATION (CCF)	5.8E-07	1.3E-05	2.3E+01
294	EPSCF4CBSO52STL-13	EPS 52/STLA,C (BREAKER) SPURIOUS OPEN (CCF)	3.4E-08	7.0E-07	2.2E+01
295	EPSCF4CBSO52STH-12	EPS 52/STHA,C (BREAKER) SPURIOUS OPEN (CCF)	3.4E-08	7.0E-07	2.2E+01
296	SGNBTSWCCF1	GROUP-1 APPLICATION SOFTWARE CCF	1.0E-05	2.1E-04	2.2E+01
297	EFWCF4CVOD012-234	EFS-VLV-012A,C,D FAIL TO OPEN (CCF)	6.2E-08	1.3E-06	2.1E+01
298	EPSCF4CBSO52LC-24	EPS 52/LCA,C (BREAKER) SPURIOUS OPEN (CCF)	3.4E-08	6.7E-07	2.1E+01
299	EFWCF2PTAD001AD-ALL	EFS-MPP-001A,D (EFW PUMP) FAIL TO START (CCF)	4.5E-04	8.8E-03	2.0E+01
300	EFWCF2PTSR001AD-ALL	EFS-MPP-001A,D (EFW PUMP) FAIL TO RUN DURING FIRST HOUR OF OPERATION (CCF)	1.1E-04	2.2E-03	2.0E+01
301	EFWCF2PTLR001AD-ALL	EFS-MPP-001A,D (EFW PUMP) FAIL TO RUN AFTER FIRST HOUR OF OPERATION (CCF)	7.2E-05	1.4E-03	2.0E+01

Table 19.1-45 Basic Events (Hardware Failure, Human Error) RAW for LRF (Sheet 20 of 60)

Rank	Basic Event ID	Basic Event Description	Basic Event Probability	FV Importance	RAW
302	EPSCF2CBFC52AAC-ALL	EPS 52/AACA,D (BREAKER) FAIL TO CLOSE (CCF)	2.8E-05	5.5E-04	2.0E+01
303	EPSCF2CBFO52EPS-ALL	EPS 52/EPSA,D (BREAKER) FAIL TO OPEN (CCF)	2.8E-05	5.5E-04	2.0E+01
304	EPSCF2CBFC89AAC-ALL	EPS 89/AACA,D (SELECTER CIRCUIT) FAIL TO CLOSE (CCF)	2.8E-05	5.5E-04	2.0E+01
305	EPSCF2CBSC52EPS-ALL	EPS 52/EPSA,D (BREAKER) SPURIOUS CLOSE (CCF)	2.8E-07	5.5E-06	2.0E+01
306	EPSCF2CBSO89AAC-ALL	EPS 89/AACA,D (SELECTER CIRCUIT) SPURIOUS OPEN (CCF)	2.8E-07	5.5E-06	2.0E+01
307	EPSCF2CBSO52AAC-ALL	EPS 52/AACA,D (BREAKER) SPURIOUS OPEN (CCF)	2.8E-07	5.5E-06	2.0E+01
308	RSSCF4CVOD004-123	RHS-VLV-004B,C,D FAIL TO OPEN (CCF)	2.2E-07	4.3E-06	2.0E+01
309	RTPCF4ICYRRT7001-235	SG WATER LEVEL SENSOR (NARROW RANGE) RT7001B,RT7001D,RT7001A CCF	9.1E-08	1.8E-06	2.0E+01
310	RTPCF4ICYRRT7001-245	SG WATER LEVEL SENSOR (NARROW RANGE) RT7001B,RT7001C,RT7001A CCF	9.1E-08	1.8E-06	2.0E+01
311	RTPCF4ICYRRT7001-234	SG WATER LEVEL SENSOR (NARROW RANGE) RT7001B,RT7001D,RT7001C CCF	9.1E-08	1.8E-06	2.0E+01
312	RTPCF4ICYRRT7001-345	SG WATER LEVEL SENSOR (NARROW RANGE) RT7001C,RT7001D,RT7001A CCF	9.1E-08	1.8E-06	2.0E+01
313	RSSCF4RHPR001-123	RHS-MHX-001B,C,D (CS/RHR HX) PLUG / FOUL (CCF)	6.4E-08	1.2E-06	2.0E+01
314	PZRSVCD120	RCS-SRV-120 FAIL TO RE-CLOSE	7.0E-05	1.3E-03	2.0E+01
315	PZRSVCD121	RCS-SRV-121 FAIL TO RE-CLOSE	7.0E-05	1.3E-03	2.0E+01
316	PZRSVCD122	RCS-SRV-122 FAIL TO RE-CLOSE	7.0E-05	1.3E-03	2.0E+01
317	PZRSVCD123	RCS-SRV-123 FAIL TO RE-CLOSE	7.0E-05	1.3E-03	2.0E+01

Table 19.1-45 Basic Events (Hardware Failure, Human Error) RAW for LRF (Sheet 21 of 60)

Rank	Basic Event ID	Basic Event Description	Basic Event Probability	FV Importance	RAW
318	EPSCF4CBSO72DD2-ALL	EPS 72/DDDA,BA,BD,DD (BREAKER) SPURIOUS OPEN (CCF)	1.6E-07	3.0E-06	2.0E+01
319	EPSCF4CBSO72DD1-ALL	EPS 72/DDAA,BB,BC,AD (BREAKER) SPURIOUS OPEN (CCF)	1.6E-07	3.0E-06	2.0E+01
320	EPSCF4CBSO72DD1-12	EPS 72/DDAA,AD (BREAKER) SPURIOUS OPEN (CCF)	3.4E-08	6.3E-07	2.0E+01
321	EPSCF4CBSO72DD2-14	EPS 72/DDDA,DD (BREAKER) SPURIOUS OPEN (CCF)	3.4E-08	6.3E-07	2.0E+01
322	EPSCF4CBSO72DD1-123	EPS 72/DDAA,BB,AD (BREAKER) SPURIOUS OPEN (CCF)	2.9E-08	5.5E-07	2.0E+01
323	EPSCF4CBSO72DD2-124	EPS 72/DDDA,BA,DD (BREAKER) SPURIOUS OPEN (CCF)	2.9E-08	5.5E-07	2.0E+01
324	EPSCF4CBSO72DD2-134	EPS 72/DDDA,BD,DD (BREAKER) SPURIOUS OPEN (CCF)	2.9E-08	5.5E-07	2.0E+01
325	EPSCF4CBSO72DD1-124	EPS 72/DDAA,BC,AD (BREAKER) SPURIOUS OPEN (CCF)	2.9E-08	5.5E-07	2.0E+01
326	EPSCF4DLLRGTG-123	CLASS-1E GTG B,C,D FAIL TO RUN AFTER FIRST HOUR OF OPERATION (CCF)	2.5E-04	4.6E-03	2.0E+01
327	EPSCF4DLADGTG-234	CLASS-1E GTG B,C,D FAIL TO START (CCF)	5.2E-05	9.8E-04	2.0E+01
328	EPSCF4DLSRGTG-123	CLASS-1E GTG B,C,D FAIL TO RUN DURING FIRST HOUR OF OPERATION (CCF)	3.9E-05	7.3E-04	2.0E+01
329	EPSCF4SEFFGTG-123	CLASS-1E GTG B,C,D SEQUENCER FAIL TO OPERATE (CCF)	1.3E-05	2.3E-04	2.0E+01
330	EPSCF4CBFC52EPS-134	EPS 52/EPSB,C,D (BREAKER) FAIL TO CLOSE (CCF)	5.2E-06	9.7E-05	2.0E+01

Table 19.1-45 Basic Events (Hardware Failure, Human Error) RAW for LRF (Sheet 22 of 60)

Rank	Basic Event ID	Basic Event Description	Basic Event Probability	FV Importance	RAW
331	EPSCF4CBSO52EPS-123	EPS 52/EPSB,C,D (BREAKER) SPURIOUS OPEN (CCF)	2.9E-08	5.5E-07	2.0E+01
332	EFWCF2MVOD103-ALL	EFS-MOV-103A,D FAIL TO OPEN (CCF)	4.2E-05	7.8E-04	1.9E+01
333	SWSCF4PMBD001-R-124	EWS-MPP-001A,C,D (ESW PUMP) FAIL TO RE-START (CCF)	1.5E-05	2.7E-04	1.9E+01
334	CWSCF4PCBD001-R-123	NCS-MPP-001A,C,D (CCW PUMP) FAIL TO RE-START (CCF)	8.4E-06	1.5E-04	1.8E+01
335	EPSCF4IVFFMVI-134	MOV INVERTER A1,C,D1 FAIL TO OPERATE (CCF)	5.0E-07	8.6E-06	1.8E+01
336	NCCOO04014	(HE) NCC MISCALIBRATION OF CSS-PT-014	8.0E-04	1.3E-02	1.8E+01
337	NCCIPFF014	CSS-PT-014 FAIL TO OPERATE	2.7E-05	4.5E-04	1.8E+01
338	EPSCF4CBSO52STH-23	EPS 52/STHB,C (BREAKER) SPURIOUS OPEN (CCF)	3.4E-08	5.6E-07	1.8E+01
339	EPSCF4CBSO52STL-23	EPS 52/STLB,C (BREAKER) SPURIOUS OPEN (CCF)	3.4E-08	5.6E-07	1.8E+01
340	EPSCF4CBSO52LC-12	EPS 52/LCB,C (BREAKER) SPURIOUS OPEN (CCF)	3.4E-08	5.6E-07	1.8E+01
341	RSSCF4PMAD001-234	RHS-MPP-001A,B,D (CS/RHR PUMP) FAIL TO START (CCF)	6.3E-06	1.0E-04	1.8E+01
342	RWSCF4SUPR001-134	SIS-SST-001A,B,D (ESS/CS STRAINER) PLUG DURING OPERATION (CCF)	3.7E-06	6.1E-05	1.7E+01
343	EFWXVEL013D	EFS-VLV-013D EXTERNAL LEAK LARGE	7.2E-08	1.2E-06	1.7E+01
344	EFWCVEL012D	EFS-VLV-012D EXTERNAL LEAK LARGE	4.8E-08	7.7E-07	1.7E+01
345	OPSLOOP	CONSEQUENTIAL LOOP GIVEN A REACTOR TRIP	5.3E-03	8.5E-02	1.7E+01
346	EPSBSFFMVCA1	A-CLASS 1E MOV 480V MCC1 FAILURE	5.8E-06	9.1E-05	1.7E+01

Table 19.1-45 Basic Events (Hardware Failure, Human Error) RAW for LRF (Sheet 23 of 60)

Rank	Basic Event ID	Basic Event Description	Basic Event Probability	FV Importance	RAW
347	RSSCF4MVOD145-134	NCS-MOV-145A,B,D FAIL TO OPEN (CCF)	1.5E-06	2.3E-05	1.7E+01
348	EPSCF4IVFFIBC-234	CLASS-1E UPS UNIT B,C,D FAIL TO OPERATE (CCF)	5.0E-07	7.5E-06	1.6E+01
349	RSSCF4PMSR001-134	RHS-MPP-001A,B,D (CS/RHR PUMP) FAIL TO RUN DURING FIRST HOUR OF OPERATION (CCF)	1.7E-06	2.5E-05	1.6E+01
350	SGNST-EFWPA	A-SG WATER LEVEL HIGH/LOW SIGNAL FAILURE	1.2E-03	1.7E-02	1.5E+01
351	EFWCF4CVOD012-134	EFS-VLV-012A,B,D FAIL TO OPEN (CCF)	6.2E-08	8.4E-07	1.5E+01
352	EFWXVEL013A	EFS-VLV-013A EXTERNAL LEAK LARGE	7.2E-08	9.7E-07	1.5E+01
353	EFWCVEL012A	EFS-VLV-012A EXTERNAL LEAK LARGE	4.8E-08	6.5E-07	1.5E+01
354	RWSCF4SUPR001-23	SIS-SST-001C,D (ESS/CS STRAINER) PLUG DURING OPERATION (CCF)	3.0E-06	4.0E-05	1.4E+01
355	CHICF2PMBD001-ALL	CVS-MPP-001A,B (CHI PUMP) FAIL TO START (CCF)	2.0E-04	2.7E-03	1.4E+01
356	RSSCF4PMLR001-134	RHS-MPP-001A,B,D (CS/RHR PUMP) FAIL TO RUN AFTER FIRST HOUR OF OPERATION (CCF)	5.8E-07	7.6E-06	1.4E+01
357	SWSCF4PMBD001-R-134	EWS-MPP-001A,B,D (ESW PUMP) FAIL TO RE-START (CCF)	1.5E-05	2.0E-04	1.4E+01
358	CWSCF4PCBD001-R-124	NCS-MPP-001A,B,D (CCW PUMP) FAIL TO RE-START (CCF)	8.4E-06	1.1E-04	1.4E+01
359	EFWCF4CVOD012-34	EFS-VLV-012A,D FAIL TO OPEN (CCF)	2.3E-07	2.8E-06	1.4E+01
360	HPICF4PMAD001-ALL	SIS-MPP-001A,B,C,D (SI PUMP) FAIL TO START (CCF)	1.1E-04	1.4E-03	1.3E+01
361	EPSBSFFMCA	A-CLASS 1E 6.9KV SWITCHGEAR FAILURE	5.8E-06	7.0E-05	1.3E+01

Table 19.1-45 Basic Events (Hardware Failure, Human Error) RAW for LRF (Sheet 24 of 60)

Rank	Basic Event ID	Basic Event Description	Basic Event Probability	FV Importance	RAW
362	EPSCF4DLLRGTG-23	CLASS-1E GTG C,D FAIL TO RUN AFTER FIRST HOUR OF OPERATION (CCF)	2.5E-04	3.0E-03	1.3E+01
363	EPSCF4DLADGTG-34	CLASS-1E GTG C,D FAIL TO START (CCF)	4.3E-05	5.0E-04	1.3E+01
364	EPSCF4DLSRGTG-23	CLASS-1E GTG C,D FAIL TO RUN DURING FIRST HOUR OF OPERATION (CCF)	4.0E-05	4.7E-04	1.3E+01
365	EPSCF4SEFFGTG-23	CLASS-1E GTG C,D SEQUENCER FAIL TO OPERATE (CCF)	2.5E-05	2.9E-04	1.3E+01
366	EPSCF4CBFC52EPS-13	EPS 52/EPS C,D (BREAKER) FAIL TO CLOSE (CCF)	5.0E-06	5.8E-05	1.3E+01
367	EPSCF4CBSO52EPS-23	EPS 52/EPSC,D (BREAKER) SPURIOUS OPEN (CCF)	3.4E-08	4.0E-07	1.3E+01
368	RSSCF4CVOD004-134	RHS-VLV-004A,B,D FAIL TO OPEN (CCF)	2.2E-07	2.6E-06	1.3E+01
369	RSSCF4RHPR001-134	RHS-MHX-001A,B,D (CS/RHR HX) PLUG / FOUL (CCF)	6.4E-08	7.5E-07	1.3E+01
370	EFWCVEL018D	EFS-VLV-018D EXTERNAL LEAK LARGE	4.8E-08	5.6E-07	1.3E+01
371	EFWMVEL014D	EFS-MOV-014D EXTERNAL LEAK LARGE	2.4E-08	2.8E-07	1.3E+01
372	EFWMVEL017D	EFS-MOV-017D EXTERNAL LEAK LARGE	2.4E-08	2.8E-07	1.3E+01
373	EFWPNELSGD	EFS D-SG SUPPLY LINE PIPING EXTERNAL LEAK LARGE	6.0E-10	7.0E-09	1.3E+01
374	EPSCF4IVFFMVI-124	MOV INVERTER A1,B,D1 FAIL TO OPERATE (CCF)	5.0E-07	5.7E-06	1.2E+01
375	ACWCF2MVOD322-ALL	NCS-MOV-322A,B FAIL TO OPEN (CCF)	4.7E-05	5.4E-04	1.2E+01
376	ACWCF2MVCD316-ALL	NCS-MOV-316A,B FAIL TO CLOSE (CCF)	4.7E-05	5.4E-04	1.2E+01
377	ACWCF2MVOD324-ALL	NCS-MOV-324A,B FAIL TO OPEN (CCF)	4.7E-05	5.4E-04	1.2E+01
378	CHIORPR070	CVS-FE-070 (ORIFICE) PLUG	2.4E-05	2.7E-04	1.2E+01
379	CHIORPR080	CVS-FE-080 (ORIFICE) PLUG	2.4E-05	2.7E-04	1.2E+01
380	CHIORPR060	CVS-FE-060 (ORIFICE) PLUG	2.4E-05	2.7E-04	1.2E+01

Table 19.1-45 Basic Events (Hardware Failure, Human Error) RAW for LRF (Sheet 25 of 60)

Rank	Basic Event ID	Basic Event Description	Basic Event Probability	FV Importance	RAW
381	CHIORPR090	CVS-FE-090 (ORIFICE) PLUG	2.4E-05	2.7E-04	1.2E+01
382	CHICVOD181A	CVS-VLV-181A FAIL TO OPEN	1.2E-05	1.4E-04	1.2E+01
383	CHICVOD179D	CVS-VLV-179D FAIL TO OPEN	1.2E-05	1.4E-04	1.2E+01
384	CHICVOD181D	CVS-VLV-181D FAIL TO OPEN	1.2E-05	1.4E-04	1.2E+01
385	CHICVOD182C	CVS-VLV-182C FAIL TO OPEN	1.2E-05	1.4E-04	1.2E+01
386	CHICVOD182B	CVS-VLV-182B FAIL TO OPEN	1.2E-05	1.4E-04	1.2E+01
387	CHICVOD182A	CVS-VLV-182A FAIL TO OPEN	1.2E-05	1.4E-04	1.2E+01
388	CHICVOD182D	CVS-VLV-182D FAIL TO OPEN	1.2E-05	1.4E-04	1.2E+01
389	CHICVOD181B	CVS-VLV-181B FAIL TO OPEN	1.2E-05	1.4E-04	1.2E+01
390	CHICVOD181C	CVS-VLV-181C FAIL TO OPEN	1.2E-05	1.4E-04	1.2E+01
391	CHICVOD179A	CVS-VLV-179A FAIL TO OPEN	1.2E-05	1.4E-04	1.2E+01
392	CHICVOD179C	CVS-VLV-179C FAIL TO OPEN	1.2E-05	1.4E-04	1.2E+01
393	CHICVOD179B	CVS-VLV-179B FAIL TO OPEN	1.2E-05	1.4E-04	1.2E+01
394	CHIAVCM050	CVS-FCV-050 SPURIOUS CLOSE	4.8E-06	5.5E-05	1.2E+01
395	CHIAVCM165	CVS-AOV-165 SPURIOUS CLOSE	4.8E-06	5.5E-05	1.2E+01
396	CHIXVPR170B	CVS-VLV-170B PLUG	2.4E-06	2.7E-05	1.2E+01
397	CHIXVPR164	CVS-VLV-164 PLUG	2.4E-06	2.7E-05	1.2E+01
398	CHIXVPR166	CVS-VLV-166 PLUG	2.4E-06	2.7E-05	1.2E+01
399	CHIXVPR171B	CVS-VLV-171B PLUG	2.4E-06	2.7E-05	1.2E+01
400	CHIXVPR180B	CVS-VLV-180B PLUG	2.4E-06	2.7E-05	1.2E+01
401	CHIXVPR180A	CVS-VLV-180A PLUG	2.4E-06	2.7E-05	1.2E+01
402	CHIXVPR180D	CVS-VLV-180D PLUG	2.4E-06	2.7E-05	1.2E+01
403	CHIXVPR180C	CVS-VLV-180C PLUG	2.4E-06	2.7E-05	1.2E+01
404	CHIXVPR177B	CVS-VLV-177B PLUG	2.4E-06	2.7E-05	1.2E+01
405	CHIXVPR177A	CVS-VLV-177A PLUG	2.4E-06	2.7E-05	1.2E+01
406	CHIXVPR177D	CVS-VLV-177D PLUG	2.4E-06	2.7E-05	1.2E+01
407	CHIXVPR177C	CVS-VLV-177C PLUG	2.4E-06	2.7E-05	1.2E+01

Table 19.1-45 Basic Events (Hardware Failure, Human Error) RAW for LRF (Sheet 26 of 60)

Rank	Basic Event ID	Basic Event Description	Basic Event Probability	FV Importance	RAW
408	CHIMVPR178D	CVS-MOV-178D PLUG	2.4E-06	2.7E-05	1.2E+01
409	CHICVPR179B	CVS-VLV-179B PLUG	2.4E-06	2.7E-05	1.2E+01
410	CHICVPR179A	CVS-VLV-179A PLUG	2.4E-06	2.7E-05	1.2E+01
411	CHICVPR179C	CVS-VLV-179C PLUG	2.4E-06	2.7E-05	1.2E+01
412	CHICVPR181A	CVS-VLV-181A PLUG	2.4E-06	2.7E-05	1.2E+01
413	CHICVPR179D	CVS-VLV-179D PLUG	2.4E-06	2.7E-05	1.2E+01
414	CHIAVPR050	CVS-FCV-050 PLUG	2.4E-06	2.7E-05	1.2E+01
415	CHIFLPR003B	CVS-MFT-003B (SEAL WATER INJECTION FILTER) PLUG	2.4E-06	2.7E-05	1.2E+01
416	CHIAVPR165	CVS-AOV-165 PLUG	2.4E-06	2.7E-05	1.2E+01
417	CHIXVPR168	CVS-VLV-168 PLUG	2.4E-06	2.7E-05	1.2E+01
418	CHIXVPR173	CVS-VLV-173 PLUG	2.4E-06	2.7E-05	1.2E+01
419	CHICVPR182D	CVS-VLV-182D PLUG	2.4E-06	2.7E-05	1.2E+01
420	CHICVPR182C	CVS-VLV-182C PLUG	2.4E-06	2.7E-05	1.2E+01
421	CHIMVPR178A	CVS-MOV-178A PLUG	2.4E-06	2.7E-05	1.2E+01
422	CHIMVPR178C	CVS-MOV-178C PLUG	2.4E-06	2.7E-05	1.2E+01
423	CHIMVPR178B	CVS-MOV-178B PLUG	2.4E-06	2.7E-05	1.2E+01
424	CHICVPR181C	CVS-VLV-181C PLUG	2.4E-06	2.7E-05	1.2E+01
425	CHICVPR181B	CVS-VLV-181B PLUG	2.4E-06	2.7E-05	1.2E+01
426	CHICVPR181D	CVS-VLV-181D PLUG	2.4E-06	2.7E-05	1.2E+01
427	CHICVPR182B	CVS-VLV-182B PLUG	2.4E-06	2.7E-05	1.2E+01
428	CHICVPR182A	CVS-VLV-182A PLUG	2.4E-06	2.7E-05	1.2E+01
429	CHIMVCM178D	CVS-MOV-178D SPURIOUS CLOSE	9.6E-07	1.1E-05	1.2E+01
430	CHIMVCM178C	CVS-MOV-178C SPURIOUS CLOSE	9.6E-07	1.1E-05	1.2E+01
431	CHIMVCM178A	CVS-MOV-178A SPURIOUS CLOSE	9.6E-07	1.1E-05	1.2E+01
432	CHIMVCM178B	CVS-MOV-178B SPURIOUS CLOSE	9.6E-07	1.1E-05	1.2E+01

Table 19.1-45 Basic Events (Hardware Failure, Human Error) RAW for LRF (Sheet 27 of 60)

Rank	Basic Event ID	Basic Event Description	Basic Event Probability	FV Importance	RAW
433	EPSCF4IVFFIBC-24	CLASS-1E UPS UNIT C,D FAIL TO OPERATE (CCF)	1.0E-06	1.1E-05	1.2E+01
434	EFWCVOD008B	EFS-VLV-008B FAIL TO OPEN	9.6E-06	1.1E-04	1.2E+01
435	EFWCVPR008B	EFS-VLV-008B PLUG	2.4E-06	2.7E-05	1.2E+01
436	EFWCVEL008B	EFS-VLV-008B EXTERNAL LEAK LARGE	4.8E-08	5.4E-07	1.2E+01
437	EPSCF4CBSO52STL-12	EPS 52/STLA,B (BREAKER) SPURIOUS OPEN (CCF)	3.4E-08	3.7E-07	1.2E+01
438	EPSCF4CBSO52STH-13	EPS 52/STHA,B (BREAKER) SPURIOUS OPEN (CCF)	3.4E-08	3.7E-07	1.2E+01
439	HPICF4PMSR001-ALL	SIS-MPP-001A,B,C,D (SI PUMP) FAIL TO RUN DURING FIRST HOUR OF OPERATION (CCF)	8.5E-06	9.3E-05	1.2E+01
440	EPSBSFFMVCD	D-CLASS 1E MOV 480V MCC1 FAILURE	5.8E-06	6.3E-05	1.2E+01
441	CHIRIEL001	CVS-MHX-001 (REGENERATIVE HX) TUBE EXTERNAL LEAK LARGE	7.2E-07	7.8E-06	1.2E+01
442	CHIPMEL001B	CVS-MPP-001B (B-CHI PUMP) EXTERNAL LEAK LARGE	1.9E-07	2.1E-06	1.2E+01
443	CHIPMEL001A	CVS-MPP-001A (A-CHI PUMP) EXTERNAL LEAK LARGE	1.9E-07	2.1E-06	1.2E+01
444	CHIXVEL132A	CVS-VLV-132A EXTERNAL LEAK LARGE	7.2E-08	7.8E-07	1.2E+01
445	CHIXVEL163	CVS-VLV-163 EXTERNAL LEAK LARGE	7.2E-08	7.8E-07	1.2E+01
446	CHIXVEL167	CVS-VLV-167 EXTERNAL LEAK LARGE	7.2E-08	7.8E-07	1.2E+01
447	CHIXVEL168	CVS-VLV-168 EXTERNAL LEAK LARGE	7.2E-08	7.8E-07	1.2E+01
448	CHIXVEL164	CVS-VLV-164 EXTERNAL LEAK LARGE	7.2E-08	7.8E-07	1.2E+01
449	CHIXVEL166	CVS-VLV-166 EXTERNAL LEAK LARGE	7.2E-08	7.8E-07	1.2E+01
450	CHIXVEL170B	CVS-VLV-170B EXTERNAL LEAK LARGE	7.2E-08	7.8E-07	1.2E+01
451	CHIXVEL126A	CVS-VLV-126A EXTERNAL LEAK LARGE	7.2E-08	7.8E-07	1.2E+01

Table 19.1-45 Basic Events (Hardware Failure, Human Error) RAW for LRF (Sheet 28 of 60)

Rank	Basic Event ID	Basic Event Description	Basic Event Probability	FV Importance	RAW
452	CHIXVEL171B	CVS-VLV-171B EXTERNAL LEAK LARGE	7.2E-08	7.8E-07	1.2E+01
453	CHIXVEL173	CVS-VLV-173 EXTERNAL LEAK LARGE	7.2E-08	7.8E-07	1.2E+01
454	CHIXVEL132B	CVS-VLV-132B EXTERNAL LEAK LARGE	7.2E-08	7.8E-07	1.2E+01
455	CHIXVEL126B	CVS-VLV-126B EXTERNAL LEAK LARGE	7.2E-08	7.8E-07	1.2E+01
456	CHIXVEL130A	CVS-VLV-130A EXTERNAL LEAK LARGE	7.2E-08	7.8E-07	1.2E+01
457	CHIXVEL147	CVS-VLV-147 EXTERNAL LEAK LARGE	7.2E-08	7.8E-07	1.2E+01
458	CHIXVEL133	CVS-VLV-133 EXTERNAL LEAK LARGE	7.2E-08	7.8E-07	1.2E+01
459	CHIXVEL130B	CVS-VLV-130B EXTERNAL LEAK LARGE	7.2E-08	7.8E-07	1.2E+01
460	CHIXVEL145	CVS-VLV-145 EXTERNAL LEAK LARGE	7.2E-08	7.8E-07	1.2E+01
461	CHIXVEL144	CVS-VLV-144 EXTERNAL LEAK LARGE	7.2E-08	7.8E-07	1.2E+01
462	CHICVEL131B	CVS-VLV-131B EXTERNAL LEAK LARGE	4.8E-08	5.2E-07	1.2E+01
463	CHICVEL153	CVS-VLV-153 EXTERNAL LEAK LARGE	4.8E-08	5.2E-07	1.2E+01
464	CHICVEL131A	CVS-VLV-131A EXTERNAL LEAK LARGE	4.8E-08	5.2E-07	1.2E+01
465	CHICVEL129B	CVS-VLV-129B EXTERNAL LEAK LARGE	4.8E-08	5.2E-07	1.2E+01
466	CHICVEL129A	CVS-VLV-129A EXTERNAL LEAK LARGE	4.8E-08	5.2E-07	1.2E+01
467	CHICVEL125	CVS-VLV-125 EXTERNAL LEAK LARGE	4.8E-08	5.2E-07	1.2E+01
468	CHICVEL160	CVS-VLV-160 EXTERNAL LEAK LARGE	4.8E-08	5.2E-07	1.2E+01
469	CHICVEL161	CVS-VLV-161 EXTERNAL LEAK LARGE	4.8E-08	5.2E-07	1.2E+01
470	CHIMVEL031C	CVS-LCV-031C EXTERNAL LEAK LARGE	2.4E-08	2.6E-07	1.2E+01
471	CHIMVEL031B	CVS-LCV-031B EXTERNAL LEAK LARGE	2.4E-08	2.6E-07	1.2E+01
472	CHIMVEL152	CVS-MOV-152 EXTERNAL LEAK LARGE	2.4E-08	2.6E-07	1.2E+01
473	CHIMVEL151	CVS-MOV-151 EXTERNAL LEAK LARGE	2.4E-08	2.6E-07	1.2E+01
474	CHIAVEL159	CVS-AOV-159 EXTERNAL LEAK LARGE	2.2E-08	2.4E-07	1.2E+01
475	CHIAVEL146	CVS-AOV-146 EXTERNAL LEAK LARGE	2.2E-08	2.4E-07	1.2E+01
476	CHIAVEL155	CVS-AOV-155 EXTERNAL LEAK LARGE	2.2E-08	2.4E-07	1.2E+01
477	CHIAVEL048	CVS-FCV-048 EXTERNAL LEAK LARGE	2.2E-08	2.4E-07	1.2E+01
478	CHIAVEL050	CVS-FCV-050 EXTERNAL LEAK LARGE	2.2E-08	2.4E-07	1.2E+01

Table 19.1-45 Basic Events (Hardware Failure, Human Error) RAW for LRF (Sheet 29 of 60)

Rank	Basic Event ID	Basic Event Description	Basic Event Probability	FV Importance	RAW
479	CHIAVEL165	CVS-AOV-165 EXTERNAL LEAK LARGE	2.2E-08	2.4E-07	1.2E+01
480	CHIPNELPIPE1	CVS CHARGING INJECTION LINE PIPING EXTERNAL LEAK LARGE	6.0E-10	6.5E-09	1.2E+01
481	EPSCBFO52RAT-BD	EPS 52/RATB,D (BREAKER) FAIL TO OPEN (CCF)	5.0E-06	5.4E-05	1.2E+01
482	EPSCBFO52UAT-BD	EPS 52/UATB,D (BREAKER) FAIL TO OPEN (CCF)	5.0E-06	5.4E-05	1.2E+01
483	EPSCF4CBSC52UAT-24	EPS 52/UATB,D (BREAKER) SPURIOUS CLOSE (CCF)	3.4E-08	3.6E-07	1.2E+01
484	EPSCF4CBSC52RAT-24	EPS 52/RATB,D (BREAKER) SPURIOUS CLOSE (CCF)	3.4E-08	3.6E-07	1.2E+01
485	EPSTRFF001B	B-CLASS 1E 6.9KV-480V CLASS 1E STATION SERVICE TRANS-FORMER FAIL TO OPERATE	8.2E-06	8.7E-05	1.2E+01
486	EPSBSFFLCB	B-CLASS 1E 480V LOAD CENTER FAILURE	5.8E-06	6.1E-05	1.2E+01
487	EPSBSFFMCCB	B-CLASS 1E 480V MCC FAILURE	5.8E-06	6.0E-05	1.1E+01
488	CHIXVEL180B	CVS-VLV-180B EXTERNAL LEAK LARGE	7.2E-08	7.5E-07	1.1E+01
489	CHIXVEL177B	CVS-VLV-177B EXTERNAL LEAK LARGE	7.2E-08	7.5E-07	1.1E+01
490	CHIXVEL177C	CVS-VLV-177C EXTERNAL LEAK LARGE	7.2E-08	7.5E-07	1.1E+01
491	CHIXVEL180A	CVS-VLV-180A EXTERNAL LEAK LARGE	7.2E-08	7.5E-07	1.1E+01
492	CHIXVEL177D	CVS-VLV-177D EXTERNAL LEAK LARGE	7.2E-08	7.5E-07	1.1E+01
493	CHIXVEL177A	CVS-VLV-177A EXTERNAL LEAK LARGE	7.2E-08	7.5E-07	1.1E+01
494	CHIXVEL180D	CVS-VLV-180D EXTERNAL LEAK LARGE	7.2E-08	7.5E-07	1.1E+01
495	CHIXVEL180C	CVS-VLV-180C EXTERNAL LEAK LARGE	7.2E-08	7.5E-07	1.1E+01
496	CHICVEL182A	CVS-VLV-182A EXTERNAL LEAK LARGE	4.8E-08	5.0E-07	1.1E+01
497	CHICVEL181D	CVS-VLV-181D EXTERNAL LEAK LARGE	4.8E-08	5.0E-07	1.1E+01
498	CHICVEL181C	CVS-VLV-181C EXTERNAL LEAK LARGE	4.8E-08	5.0E-07	1.1E+01

Table 19.1-45 Basic Events (Hardware Failure, Human Error) RAW for LRF (Sheet 30 of 60)

Rank	Basic Event ID	Basic Event Description	Basic Event Probability	FV Importance	RAW
499	CHICVEL182D	CVS-VLV-182D EXTERNAL LEAK LARGE	4.8E-08	5.0E-07	1.1E+01
500	CHICVEL182C	CVS-VLV-182C EXTERNAL LEAK LARGE	4.8E-08	5.0E-07	1.1E+01
501	CHICVEL182B	CVS-VLV-182B EXTERNAL LEAK LARGE	4.8E-08	5.0E-07	1.1E+01
502	CHICVEL179C	CVS-VLV-179C EXTERNAL LEAK LARGE	4.8E-08	5.0E-07	1.1E+01
503	CHICVEL179B	CVS-VLV-179B EXTERNAL LEAK LARGE	4.8E-08	5.0E-07	1.1E+01
504	CHICVEL179A	CVS-VLV-179A EXTERNAL LEAK LARGE	4.8E-08	5.0E-07	1.1E+01
505	CHICVEL181B	CVS-VLV-181B EXTERNAL LEAK LARGE	4.8E-08	5.0E-07	1.1E+01
506	CHICVEL181A	CVS-VLV-181A EXTERNAL LEAK LARGE	4.8E-08	5.0E-07	1.1E+01
507	CHICVEL179D	CVS-VLV-179D EXTERNAL LEAK LARGE	4.8E-08	5.0E-07	1.1E+01
508	CHIMVEL178A	CVS-MOV-178A EXTERNAL LEAK LARGE	2.4E-08	2.5E-07	1.1E+01
509	CHIMVEL178B	CVS-MOV-178B EXTERNAL LEAK LARGE	2.4E-08	2.5E-07	1.1E+01
510	CHIMVEL178D	CVS-MOV-178D EXTERNAL LEAK LARGE	2.4E-08	2.5E-07	1.1E+01
511	CHIMVEL178C	CVS-MOV-178C EXTERNAL LEAK LARGE	2.4E-08	2.5E-07	1.1E+01
512	EFWXVPR007B	EFS-VLV-007B PLUG	2.4E-06	2.5E-05	1.1E+01
513	EFWXVEL009D	EFS-VLV-009D EXTERNAL LEAK LARGE	7.2E-08	7.5E-07	1.1E+01
514	EFWXVEL009C	EFS-VLV-009C EXTERNAL LEAK LARGE	7.2E-08	7.5E-07	1.1E+01
515	EFWXVEL007B	EFS-VLV-007B EXTERNAL LEAK LARGE	7.2E-08	7.5E-07	1.1E+01
516	EFWTNEL001B	EFS-MPT-001B (B-EFW PIT) EXTERNAL LEAK LARGE	4.8E-08	5.0E-07	1.1E+01
517	EFWPNELCSTB	EFS B-EFW PIT OUTLET PIPING EXTERNAL LEAK LARGE	6.0E-10	6.2E-09	1.1E+01
518	CHIMVPR031C	CVS-LCV-031C PLUG	2.4E-06	2.5E-05	1.1E+01
519	CHIMVPR031B	CVS-LCV-031B PLUG	2.4E-06	2.5E-05	1.1E+01
520	CHICVPR125	CVS-VLV-125 PLUG	2.4E-06	2.5E-05	1.1E+01
521	CHIMVCM031C	CVS-LCV-031C SPURIOUS CLOSE	9.6E-07	9.9E-06	1.1E+01
522	CHIMVCM031B	CVS-LCV-031B SPURIOUS CLOSE	9.6E-07	9.9E-06	1.1E+01

Table 19.1-45 Basic Events (Hardware Failure, Human Error) RAW for LRF (Sheet 31 of 60)

Rank	Basic Event ID	Basic Event Description	Basic Event Probability	FV Importance	RAW
523	CHITNEL001	CVS-MTK-001 (VCT) EXTERNAL LEAK LARGE	4.8E-08	4.9E-07	1.1E+01
524	CHICF2PMYR001-R-ALL	CVS-MPP-001A,B (CHI PUMP) FAIL TO RUN (CCF)	5.0E-06	5.1E-05	1.1E+01
525	ACWCF2CVCD306-ALL	NCS-VLV-306A,B FAIL TO CLOSE (CCF)	4.7E-06	4.8E-05	1.1E+01
526	EPSCBSO52STLB	EPS 52/STLB (BREAKER) SPURIOUS OPEN	3.0E-06	3.1E-05	1.1E+01
527	EPSCBSO52STHB	EPS 52/STHB (BREAKER) SPURIOUS OPEN	3.0E-06	3.1E-05	1.1E+01
528	EPSCBSO52LCB	EPS 52/LCB (BREAKER) SPURIOUS OPEN	3.0E-06	3.1E-05	1.1E+01
529	EPSOO02RDG	(HE) FAIL TO CONNECT THE ALTERNATE AC POWER SOURCE TO CLASS 1E BUS	2.1E-02	2.2E-01	1.1E+01
530	EPSCF4CBSO52LC-14	EPS 52/LCA,B (BREAKER) SPURIOUS OPEN (CCF)	3.4E-08	3.3E-07	1.1E+01
531	EPSCF4CBSO52UA-24	EPS 52/UAC,D (BREAKER) SPURIOUS OPEN (CCF)	3.4E-08	3.3E-07	1.1E+01
532	EPSCF4CBSO72AU-24	EPS 72/AUC,D (BREAKER) SPURIOUS OPEN (CCF)	3.4E-08	3.3E-07	1.1E+01
533	EPSCF4CBSO72DB-34	EPS 72/DBC,D (BREAKER) SPURIOUS OPEN (CCF)	3.4E-08	3.3E-07	1.1E+01
534	EPSCF4CBSO72AU-234	EPS 72/AUB,C,D (BREAKER) SPURIOUS OPEN (CCF)	2.9E-08	2.9E-07	1.1E+01
535	EPSCF4CBSO52UA-234	EPS 52/UAB,C,D (BREAKER) SPURIOUS OPEN (CCF)	2.9E-08	2.9E-07	1.1E+01
536	EPSCF4BYFFBAT-12	CLASS-1E BATTERY C, D FAIL TO OPERATE (CCF)	1.9E-08	1.9E-07	1.1E+01

Table 19.1-45 Basic Events (Hardware Failure, Human Error) RAW for LRF (Sheet 32 of 60)

Rank	Basic Event ID	Basic Event Description	Basic Event Probability	FV Importance	RAW
537	HPICF4PMLR001-ALL	SIS-MPP-001A,B,C,D (SI PUMP) FAIL TO RUN AFTER FIRST HOUR OF OPERATION (CCF)	2.9E-06	2.9E-05	1.1E+01
538	RSSCF4PMAD001-12	RHS-MPP-001C,D (CS/RHR PUMP) FAIL TO START (CCF)	1.3E-05	1.2E-04	1.1E+01
539	EPSCF4DLLRGTG-124	CLASS-1E GTG A,B,C FAIL TO RUN AFTER FIRST HOUR OF OPERATION (CCF)	2.5E-04	2.3E-03	1.0E+01
540	EPSCF4DLADGTG-123	CLASS-1E GTG A,B,C FAIL TO START (CCF)	5.2E-05	4.9E-04	1.0E+01
541	EPSCF4DLSRGTG-124	CLASS-1E GTG A,B,C FAIL TO RUN DURING FIRST HOUR OF OPERATION (CCF)	3.9E-05	3.7E-04	1.0E+01
542	EPSCF4SEFFGTG-124	CLASS-1E GTG A,B,C SEQUENCER FAIL TO OPERATE (CCF)	1.3E-05	1.2E-04	1.0E+01
543	EPSCF4CBFC52EPS-234	EPS 52/EPSA,B,C (BREAKER) FAIL TO CLOSE (CCF)	5.2E-06	4.9E-05	1.0E+01
544	HPICF4CVOD012-ALL	SIS-VLV-012A,B,C,D FAIL TO OPEN (CCF)	1.0E-06	9.5E-06	1.0E+01
545	HPICF4CVOD013-ALL	SIS-VLV-013A,B,C,D FAIL TO OPEN (CCF)	1.0E-06	9.5E-06	1.0E+01
546	HPICF4CVOD004-ALL	SIS-VLV-004A,B,C,D FAIL TO OPEN (CCF)	1.0E-06	9.5E-06	1.0E+01
547	HPICF4CVOD010-ALL	SIS-VLV-010A,B,C,D FAIL TO OPEN (CCF)	1.0E-06	9.5E-06	1.0E+01
548	EPSCF4CBSO52EPS-124	EPS 52/EPSA,B,C (BREAKER) SPURIOUS OPEN (CCF)	2.9E-08	2.8E-07	1.0E+01
549	RSSCF4PMSR001-23	RHS-MPP-001C,D (CS/RHR PUMP) FAIL TO RUN DURING FIRST HOUR OF OPERATION (CCF)	3.3E-06	3.1E-05	1.0E+01
550	EPSCF4IVFFMVI-14	MOV INVERTER A1,D1 FAIL TO OPERATE (CCF)	1.0E-06	9.3E-06	1.0E+01

Table 19.1-45 Basic Events (Hardware Failure, Human Error) RAW for LRF (Sheet 33 of 60)

Rank	Basic Event ID	Basic Event Description	Basic Event Probability	FV Importance	RAW
551	RSSCF4PMLR001-23	RHS-MPP-001C,D (CS/RHR PUMP) FAIL TO RUN AFTER FIRST HOUR OF OPERATION (CCF)	1.2E-06	1.1E-05	1.0E+01
552	EPSCBFO52RAT-D	EPS 52/RATD (BREAKER) FAIL TO OPEN	3.5E-04	3.2E-03	1.0E+01
553	EPSCBFO52UAT-D	EPS 52/UATD (BREAKER) FAIL TO OPEN	3.5E-04	3.2E-03	1.0E+01
554	EPSCBSC52RATD	EPS 52/RATD (BREAKER) SPURIOUS CLOSE	3.0E-06	2.8E-05	1.0E+01
555	EPSCBSC52UATD	EPS 52/UATD (BREAKER) SPURIOUS CLOSE	3.0E-06	2.8E-05	1.0E+01
556	SWSCF4CVOD502-R-234	EWS-VLV-502A,C,D FAIL TO RE-OPEN (CCF)	5.0E-08	4.6E-07	1.0E+01
557	CWSCF4CVOD016-R-134	NCS-VLV-016A,C,D FAIL TO RE-OPEN (CCF)	5.0E-08	4.6E-07	1.0E+01
558	SWSCF4CVOD602-R-234	EWS-VLV-602A,C,D FAIL TO RE-OPEN (CCF)	5.0E-08	4.6E-07	1.0E+01
559	ACWCVEL306B	NCS-VLV-306B EXTERNAL LEAK LARGE	4.8E-08	4.4E-07	1.0E+01
560	ACWCVEL306A	NCS-VLV-306A EXTERNAL LEAK LARGE	4.8E-08	4.4E-07	1.0E+01
561	ACWMVEL316A	NCS-MOV-316A EXTERNAL LEAK LARGE	2.4E-08	2.2E-07	1.0E+01
562	ACWMVEL316B	NCS-MOV-316B EXTERNAL LEAK LARGE	2.4E-08	2.2E-07	1.0E+01
563	SWSSTPRST001C	EWS-SST-001C (STRAINER) PLUG	1.7E-04	1.5E-03	9.9E+00
564	SWSMVPR503C	EWS-MOV-503C PLUG	2.4E-06	2.1E-05	9.9E+00
565	SWSXVPR508C	EWS-VLV-508C PLUG	2.4E-06	2.1E-05	9.9E+00
566	SWSCVPR502C	EWS-VLV-502C PLUG	2.4E-06	2.1E-05	9.9E+00
567	SWSXVPR506C	EWS-VLV-506C PLUG	2.4E-06	2.1E-05	9.9E+00
568	SWSMVCM503C	EWS-MOV-503C SPURIOUS CLOSE	9.6E-07	8.6E-06	9.9E+00
569	SWSXVEL506C	EWS-VLV-506C EXTERNAL LEAK LARGE	7.2E-08	6.4E-07	9.9E+00
570	SWSXVEL507C	EWS-VLV-507C EXTERNAL LEAK LARGE	7.2E-08	6.4E-07	9.9E+00

Table 19.1-45 Basic Events (Hardware Failure, Human Error) RAW for LRF (Sheet 34 of 60)

Rank	Basic Event ID	Basic Event Description	Basic Event Probability	FV Importance	RAW
571	SWSXVEL508C	EWS-VLV-508C EXTERNAL LEAK LARGE	7.2E-08	6.4E-07	9.9E+00
572	SWSXVEL509C	EWS-VLV-509C EXTERNAL LEAK LARGE	7.2E-08	6.4E-07	9.9E+00
573	SWSXVEL701C	EWS-VLV-701C EXTERNAL LEAK LARGE	7.2E-08	6.4E-07	9.9E+00
574	SWSCVEL502C	EWS-VLV-502C EXTERNAL LEAK LARGE	4.8E-08	4.3E-07	9.9E+00
575	SWSMVEL503C	EWS-MOV-503C EXTERNAL LEAK LARGE	2.4E-08	2.1E-07	9.9E+00
576	SWSPEELSWPC1	EWS C-ESW PUMP DISCHARGE LINE PIPING EXTERNAL LEAK LARGE	3.6E-09	3.2E-08	9.9E+00
577	EPSCF4DLLRGTG-134	CLASS-1E GTG A,B,D FAIL TO RUN AFTER FIRST HOUR OF OPERATION (CCF)	2.5E-04	2.2E-03	9.8E+00
578	EPSCF4DLADGTG-124	CLASS-1E GTG A,B,D FAIL TO START (CCF)	5.2E-05	4.6E-04	9.8E+00
579	EPSCF4DLSRGTG-134	CLASS-1E GTG A,B,D FAIL TO RUN DURING FIRST HOUR OF OPERATION (CCF)	3.9E-05	3.5E-04	9.8E+00
580	EPSCF4SEFFGTG-134	CLASS-1E GTG A,B,D SEQUENCER FAIL TO OPERATE (CCF)	1.3E-05	1.1E-04	9.8E+00
581	EPSCF4CBFC52EPS-124	EPS 52/EPSA,B,D (BREAKER) FAIL TO CLOSE (CCF)	5.2E-06	4.6E-05	9.8E+00
582	EPSCF4CBSO52EPS-134	EPS 52/EPSA,B,D (BREAKER) SPURIOUS OPEN (CCF)	2.9E-08	2.6E-07	9.8E+00
583	SWSPMYR001C	EWS-MPP-001C (C-ESW PUMP) FAIL TO RUN	1.1E-04	9.8E-04	9.8E+00
584	RSSCF4MVOD145-23	NCS-MOV-145C,D FAIL TO OPEN (CCF)	5.7E-06	5.0E-05	9.7E+00
585	CHICVEL595	CVS-VLV-595 EXTERNAL LEAK LARGE	4.8E-08	4.1E-07	9.6E+00
586	EFWCVEL018A	EFS-VLV-018A EXTERNAL LEAK LARGE	4.8E-08	4.1E-07	9.6E+00
587	EFWMVEL019D	EFS-MOV-019D EXTERNAL LEAK LARGE	2.4E-08	2.1E-07	9.6E+00
588	EFWMVEL017A	EFS-MOV-017A EXTERNAL LEAK LARGE	2.4E-08	2.1E-07	9.6E+00

Table 19.1-45 Basic Events (Hardware Failure, Human Error) RAW for LRF (Sheet 35 of 60)

Rank	Basic Event ID	Basic Event Description	Basic Event Probability	FV Importance	RAW
589	EFWMVEL019A	EFS-MOV-019A EXTERNAL LEAK LARGE	2.4E-08	2.1E-07	9.6E+00
590	EFWMVEL014A	EFS-MOV-014A EXTERNAL LEAK LARGE	2.4E-08	2.1E-07	9.6E+00
591	ACWMVEL325B	NCS-MOV-325B EXTERNAL LEAK LARGE	2.4E-08	2.1E-07	9.6E+00
592	ACWMVEL325A	NCS-MOV-325A EXTERNAL LEAK LARGE	2.4E-08	2.1E-07	9.6E+00
593	ACWMVEL323B	NCS-MOV-323B EXTERNAL LEAK LARGE	2.4E-08	2.1E-07	9.6E+00
594	ACWMVEL326A	NCS-MOV-326A EXTERNAL LEAK LARGE	2.4E-08	2.1E-07	9.6E+00
595	ACWMVEL326B	NCS-MOV-326B EXTERNAL LEAK LARGE	2.4E-08	2.1E-07	9.6E+00
596	ACWMVEL324A	NCS-MOV-324A EXTERNAL LEAK LARGE	2.4E-08	2.1E-07	9.6E+00
597	ACWMVEL324B	NCS-MOV-324B EXTERNAL LEAK LARGE	2.4E-08	2.1E-07	9.6E+00
598	ACWMVEL323A	NCS-MOV-323A EXTERNAL LEAK LARGE	2.4E-08	2.1E-07	9.6E+00
599	ACWMVEL321A	NCS-MOV-321A EXTERNAL LEAK LARGE	2.4E-08	2.1E-07	9.6E+00
600	ACWMVEL321B	NCS-MOV-321B EXTERNAL LEAK LARGE	2.4E-08	2.1E-07	9.6E+00
601	ACWMVEL322B	NCS-MOV-322B EXTERNAL LEAK LARGE	2.4E-08	2.1E-07	9.6E+00
602	ACWMVEL322A	NCS-MOV-322A EXTERNAL LEAK LARGE	2.4E-08	2.1E-07	9.6E+00
603	EFWPNELSGA	EFS A-SG SUPPLY LINE PIPING EXTERNAL LEAK LARGE	6.0E-10	5.2E-09	9.6E+00
604	ACWPNELPIPEA2	ALTERNATE CCW A-CHI PUMP DISCHARGE LINE PIPING EXTERNAL LEAK LARGE	6.0E-10	5.2E-09	9.6E+00
605	ACWPNELPIPEB2	ALTERNATE CCW B-CHI PUMP DISCHARGE LINE PIPING EXTERNAL LEAK LARGE	6.0E-10	5.2E-09	9.6E+00
606	ACWPNELPIPEA1	ALTERNATE CCW A-CHI PUMP SUCTION LINE PIPING EXTERNAL LEAK LARGE	6.0E-10	5.2E-09	9.6E+00
607	ACWPNELPIPEB1	ALTERNATE CCW B-CHI PUMP SUCTION LINE PIPING EXTERNAL LEAK LARGE	6.0E-10	5.2E-09	9.6E+00
608	SWSFMPR072	EWS-FT-072 (FLOW METER) PLUG	2.4E-05	2.1E-04	9.6E+00

Table 19.1-45 Basic Events (Hardware Failure, Human Error) RAW for LRF (Sheet 36 of 60)

Rank	Basic Event ID	Basic Event Description	Basic Event Probability	FV Importance	RAW
609	SWSORPR002C	EWS-SRO-002C (ORIFICE) PLUG	2.4E-05	2.1E-04	9.6E+00
610	SWSXVPR601C	EWS-VLV-601C PLUG	2.4E-06	2.1E-05	9.6E+00
611	SWSCVPR602C	EWS-VLV-602C PLUG	2.4E-06	2.1E-05	9.6E+00
612	SWSXVEL601C	EWS-VLV-601C EXTERNAL LEAK LARGE	7.2E-08	6.2E-07	9.6E+00
613	SWSCVEL602C	EWS-VLV-602C EXTERNAL LEAK LARGE	4.8E-08	4.1E-07	9.6E+00
614	SWSPEELSWSC2	EWS C-ESW PUMP COOLING LINE PIPING EXTERNAL LEAK LARGE	3.6E-09	3.1E-08	9.6E+00
615	EPSCF2CBSO72DU1-ALL	EPS 72/DUA1,D1 (BREAKER) SPURIOUS OPEN (CCF)	2.8E-07	2.4E-06	9.5E+00
616	CWSCF4CVOD016-R-124	NCS-VLV-016A,B,D FAIL TO RE-OPEN (CCF)	5.0E-08	4.2E-07	9.5E+00
617	SWSCF4CVOD502-R-134	EWS-VLV-502A,B,D FAIL TO RE-OPEN (CCF)	5.0E-08	4.2E-07	9.5E+00
618	SWSCF4CVOD602-R-134	EWS-VLV-602A,B,D FAIL TO RE-OPEN (CCF)	5.0E-08	4.2E-07	9.5E+00
619	EFWCVOD008A	EFS-VLV-008A FAIL TO OPEN	9.6E-06	7.8E-05	9.1E+00
620	EFWCVPR008A	EFS-VLV-008A PLUG	2.4E-06	1.9E-05	9.1E+00
621	EFWCVEL008A	EFS-VLV-008A EXTERNAL LEAK LARGE	4.8E-08	3.9E-07	9.1E+00
622	EPSTRFF001A	A-CLASS 1E 6.9KV-480V CLASS 1E STATION SERVICE TRANSFORMER FAIL TO OPERATE	8.2E-06	6.5E-05	9.0E+00
623	EPSBSFFLCA	A-CLASS 1E 480V LOAD CENTER FAILURE	5.8E-06	4.6E-05	9.0E+00
624	EFWXVPR007A	EFS-VLV-007A PLUG	2.4E-06	1.8E-05	8.5E+00
625	EFWXVEL009B	EFS-VLV-009B EXTERNAL LEAK LARGE	7.2E-08	5.4E-07	8.5E+00
626	EFWXVEL009A	EFS-VLV-009A EXTERNAL LEAK LARGE	7.2E-08	5.4E-07	8.5E+00
627	EFWXVEL007A	EFS-VLV-007A EXTERNAL LEAK LARGE	7.2E-08	5.4E-07	8.5E+00

Table 19.1-45 Basic Events (Hardware Failure, Human Error) RAW for LRF (Sheet 37 of 60)

Rank	Basic Event ID	Basic Event Description	Basic Event Probability	FV Importance	RAW
628	EFWTNEL001A	EFS-MPT-001A (A-EFW PIT) EXTERNAL LEAK LARGE	4.8E-08	3.6E-07	8.5E+00
629	EFWPNELCSTA	EFS A-EFW PIT OUTLET PIPING EXTERNAL LEAK LARGE	6.0E-10	4.5E-09	8.5E+00
630	SWSCF4PMBD001-R-234	EWS-MPP-001A,B,C (ESW PUMP) FAIL TO RE-START (CCF)	1.5E-05	1.1E-04	8.5E+00
631	RSSCF4MVOD004-124	CSS-MOV-004A,B,C FAIL TO OPEN (CCF)	1.5E-06	1.1E-05	8.5E+00
632	RSSCF4CVOD004-23	RHS-VLV-004C,D FAIL TO OPEN (CCF)	2.0E-07	1.5E-06	8.4E+00
633	RSSCF4RHPR001-23	RHS-MHX-001C,D (CS/RHR HX) PLUG / FOUL (CCF)	1.7E-07	1.3E-06	8.4E+00
634	RSSCF4MVOD004-234	CSS-MOV-004A,C,D FAIL TO OPEN (CCF)	1.5E-06	1.1E-05	8.4E+00
635	EFWXVEL013C	EFS-VLV-013C EXTERNAL LEAK LARGE	7.2E-08	5.3E-07	8.4E+00
636	EFWCVEL012C	EFS-VLV-012C EXTERNAL LEAK LARGE	4.8E-08	3.6E-07	8.4E+00
637	EPSBSFFMCC	C-CLASS 1E 6.9KV SWITCHGEAR FAILURE	5.8E-06	4.2E-05	8.4E+00
638	EFWCF4CVOD012-124	EFS-VLV-012B,C,D FAIL TO OPEN (CCF)	6.2E-08	4.6E-07	8.3E+00
639	EFWCF4CVOD012-123	EFS-VLV-012A,B,C FAIL TO OPEN (CCF)	6.2E-08	4.6E-07	8.3E+00
640	EPSCBSO52STHA	EPS 52/STHA (BREAKER) SPURIOUS OPEN	3.0E-06	2.2E-05	8.3E+00
641	EPSCBSO52STLA	EPS 52/STLA (BREAKER) SPURIOUS OPEN	3.0E-06	2.2E-05	8.3E+00
642	EPSTRFF001C	C-CLASS 1E 6.9KV-480V CLASS 1E STATION SERVICE TRANSFORMER FAIL TO OPERATE	8.2E-06	6.0E-05	8.3E+00
643	EPSBSFFLCC	C-CLASS 1E 480V LOAD CENTER FAILURE	5.8E-06	4.2E-05	8.3E+00
644	EFWCF4CVOD012-24	EFS-VLV-012C,D FAIL TO OPEN (CCF)	2.3E-07	1.6E-06	8.3E+00

Table 19.1-45 Basic Events (Hardware Failure, Human Error) RAW for LRF (Sheet 38 of 60)

Rank	Basic Event ID	Basic Event Description	Basic Event Probability	FV Importance	RAW
645	EPSCF4IVFFMVI-123	MOV INVERTER A1,B,C FAIL TO OPERATE (CCF)	5.0E-07	3.6E-06	8.1E+00
646	CIACF2AVCDCIV-ALL	VCS-AOV-356,357 FAIL TO CLOSE (CCF)	5.6E-05	4.0E-04	8.1E+00
647	HPICF4PMAD001-123	SIS-MPP-001B,C,D (SI PUMP) FAIL TO START (CCF)	9.5E-06	6.8E-05	8.1E+00
648	EPSBSFFMCCC	C-CLASS 1E 480V MCC FAILURE	5.8E-06	4.1E-05	8.1E+00
649	CWSCF4PCBD001-R-134	NCS-MPP-001A,B,C (CCW PUMP) FAIL TO RE-START (CCF)	8.4E-06	5.9E-05	8.1E+00
650	CIACF2MVCDCIV-ALL	RCS-MOV-203,204 FAIL TO CLOSE (CCF)	3.3E-05	2.3E-04	8.0E+00
651	SWSORPR036	EWS-FE-036 (ORIFICE) PLUG	2.4E-05	1.7E-04	8.0E+00
652	CWSORPR042	NCS-FE-042 (ORIFICE) PLUG	2.4E-05	1.7E-04	8.0E+00
653	SWSORPR001C	EWS-SRO-001C (ORIFICE) PLUG	2.4E-05	1.7E-04	8.0E+00
654	CWSXVPR008C	NCS-VLV-008C PLUG	2.4E-06	1.7E-05	8.0E+00
655	CWSXVPR005C	NCS-VLV-005C PLUG	2.4E-06	1.7E-05	8.0E+00
656	SWSXVPR520C	EWS-VLV-520C PLUG	2.4E-06	1.7E-05	8.0E+00
657	CWSXVPR104C	NCS-VLV-104C PLUG	2.4E-06	1.7E-05	8.0E+00
658	CWSXVPR101C	NCS-VLV-101C PLUG	2.4E-06	1.7E-05	8.0E+00
659	CWSCVPR016C	NCS-VLV-016C PLUG	2.4E-06	1.7E-05	8.0E+00
660	CWSXVPR018C	NCS-VLV-018C PLUG	2.4E-06	1.7E-05	8.0E+00
661	SWSXVPR517C	EWS-VLV-517C PLUG	2.4E-06	1.7E-05	8.0E+00
662	CWSPCYR001C	NCS-MPP-001C (C-CCW PUMP) FAIL TO RUN	6.2E-05	4.3E-04	8.0E+00
663	EPSCBSO52STLC	EPS 52/STLC (BREAKER) SPURIOUS OPEN	3.0E-06	2.1E-05	7.8E+00
664	EPSCBSO52LCC	EPS 52/LCC (BREAKER) SPURIOUS OPEN	3.0E-06	2.1E-05	7.8E+00
665	EPSCBSO52STHC	EPS 52/STHC (BREAKER) SPURIOUS OPEN	3.0E-06	2.1E-05	7.8E+00

Table 19.1-45 Basic Events (Hardware Failure, Human Error) RAW for LRF (Sheet 39 of 60)

Rank	Basic Event ID	Basic Event Description	Basic Event Probability	FV Importance	RAW
666	CWSORPR037	NCS-FE-037 (ORIFICE) PLUG	2.4E-05	1.6E-04	7.8E+00
667	SWSSTPRST003C	EWS-SST-003C (STRAINER) PLUG	1.7E-04	1.1E-03	7.8E+00
668	HPICF4PMSR001-123	SIS-MPP-001B,C,D (SI PUMP) FAIL TO RUN DURING FIRST HOUR OF OPERATION (CCF)	3.3E-06	2.2E-05	7.6E+00
669	ACWTNELFWT	FWT (FIRE SUPPRESSION WATER TANK) EXTERNAL LEAK LARGE	4.8E-08	3.0E-07	7.3E+00
670	ACWPNELPIPEFS	FIRE SUPPRESSION WATER TANK LINE PIPING EXTERNAL LEAK LARGE	6.0E-10	3.8E-09	7.3E+00
671	ACWOO02FS	(HE) FAIL TO ESTABLISH THE ALTERNATE CCWS BY FIRE PROTECTION WATER SUPPLY SYSTEM	1.1E-02	7.1E-02	7.2E+00
672	SWSXVPR514C	EWS-VLV-514C PLUG	2.4E-06	1.5E-05	7.1E+00
673	SWSXVPR511C	EWS-VLV-511C PLUG	2.4E-06	1.5E-05	7.1E+00
674	EPSCBFO52RAT-AC	EPS 52/RATA,C (BREAKER) FAIL TO OPEN (CCF)	5.0E-06	3.0E-05	7.1E+00
675	EPSCBFO52UAT-AC	EPS 52/UATA,C (BREAKER) FAIL TO OPEN (CCF)	5.0E-06	3.0E-05	7.1E+00
676	EPSCF4CBSC52UAT-13	EPS 52/UATA,C (BREAKER) SPURIOUS CLOSE (CCF)	3.4E-08	2.0E-07	7.1E+00
677	EPSCF4CBSC52RAT-13	EPS 52/RATA,C (BREAKER) SPURIOUS CLOSE (CCF)	3.4E-08	2.0E-07	7.1E+00
678	HPICF4PMLR001-123	SIS-MPP-001B,C,D (SI PUMP) FAIL TO RUN AFTER FIRST HOUR OF OPERATION (CCF)	1.1E-06	6.8E-06	7.0E+00
679	SWSRIEL001C	NCS-MHX-001C (C-CCW HX) TUBE EXTERNAL LEAK LARGE	7.2E-07	4.3E-06	7.0E+00

Table 19.1-45 Basic Events (Hardware Failure, Human Error) RAW for LRF (Sheet 40 of 60)

Rank	Basic Event ID	Basic Event Description	Basic Event Probability	FV Importance	RAW
680	SWSXVEL511C	EWS-VLV-511C EXTERNAL LEAK LARGE	7.2E-08	4.3E-07	7.0E+00
681	SWSXVEL514C	EWS-VLV-514C EXTERNAL LEAK LARGE	7.2E-08	4.3E-07	7.0E+00
682	SWSPEELSWSC3	EWS C-CCW HX COOLING LINE PIPING EXTERNAL LEAK LARGE	3.6E-09	2.2E-08	7.0E+00
683	EPSBSFFMCCA	A-CLASS 1E 480V MCC FAILURE	5.8E-06	3.4E-05	6.9E+00
684	PZRCF2MVOD117-ALL	RCS-MOV-117A,B FAIL TO OPEN (CCF)	1.3E-04	7.4E-04	6.9E+00
685	MSRCF4AVCD515-ALL	MSS-SMV-515A,B,C,D FAIL TO CLOSE (CCF)	1.8E-04	1.0E-03	6.9E+00
686	CWSRHPF001C	NCS-MHX-001C (C-CCW HX) PLUG / FOUL	1.4E-06	8.0E-06	6.8E+00
687	MSRCF4AVCD515-24	MSS-SMV-515B,D FAIL TO CLOSE (CCF)	5.2E-05	3.1E-04	6.8E+00
688	MSRCF4AVCD515-14	MSS-SMV-515C,D FAIL TO CLOSE (CCF)	5.2E-05	3.1E-04	6.8E+00
689	MSRCF4AVCD515-34	MSS-SMV-515A,D FAIL TO CLOSE (CCF)	5.2E-05	3.1E-04	6.8E+00
690	MSRCF4AVCD515-134	MSS-SMV-515A,C,D FAIL TO CLOSE (CCF)	2.6E-05	1.5E-04	6.8E+00
691	MSRCF4AVCD515-124	MSS-SMV-515B,C,D FAIL TO CLOSE (CCF)	2.6E-05	1.5E-04	6.8E+00
692	MSRCF4AVCD515-234	MSS-SMV-515A,B,D FAIL TO CLOSE (CCF)	2.6E-05	1.5E-04	6.8E+00
693	EPSCBSO52LCA	EPS 52/LCA (BREAKER) SPURIOUS OPEN	3.0E-06	1.7E-05	6.8E+00
694	SWSCF4PMBD001-R-14	EWS-MPP-001A,D (ESW PUMP) FAIL TO RE-START (CCF)	7.1E-05	4.1E-04	6.7E+00
695	CWSCF4PCBD001-R-12	NCS-MPP-001A,D (CCW PUMP) FAIL TO RE-START (CCF)	3.9E-05	2.2E-04	6.6E+00
696	HPICF4CVOD004-123	SIS-VLV-004B,C,D FAIL TO OPEN (CCF)	2.7E-07	1.5E-06	6.6E+00
697	HPICF4CVOD010-123	SIS-VLV-010B,C,D FAIL TO OPEN (CCF)	2.7E-07	1.5E-06	6.6E+00
698	HPICF4CVOD012-123	SIS-VLV-012B,C,D FAIL TO OPEN (CCF)	2.7E-07	1.5E-06	6.6E+00
699	HPICF4CVOD013-123	SIS-VLV-013B,C,D FAIL TO OPEN (CCF)	2.7E-07	1.5E-06	6.6E+00
700	RSSCF4MVOD004-123	CSS-MOV-004B,C,D FAIL TO OPEN (CCF)	1.5E-06	8.0E-06	6.5E+00
701	EFWCF4CVOD012-13	EFS-VLV-012A,B FAIL TO OPEN (CCF)	2.3E-07	1.2E-06	6.4E+00

Table 19.1-45 Basic Events (Hardware Failure, Human Error) RAW for LRF (Sheet 41 of 60)

Rank	Basic Event ID	Basic Event Description	Basic Event Probability	FV Importance	RAW
702	CWSRIEL001C	NCS-MHX-001C (C-CCW HX) TUBE EXTERNAL LEAK LARGE	7.2E-07	3.9E-06	6.4E+00
703	CWSPMEL001C	NCS-MPP-001C (C-CCW PUMP) EXTERNAL LEAK LARGE	1.9E-07	1.0E-06	6.4E+00
704	CWSXVEL104C	NCS-VLV-104C EXTERNAL LEAK LARGE	7.2E-08	3.9E-07	6.4E+00
705	HPIXVEL114C	NCS-VLV-114C EXTERNAL LEAK LARGE	7.2E-08	3.9E-07	6.4E+00
706	HPIXVEL119C	NCS-VLV-119C EXTERNAL LEAK LARGE	7.2E-08	3.9E-07	6.4E+00
707	CWSXVEL008C	NCS-VLV-008C EXTERNAL LEAK LARGE	7.2E-08	3.9E-07	6.4E+00
708	CWSXVEL018C	NCS-VLV-018C EXTERNAL LEAK LARGE	7.2E-08	3.9E-07	6.4E+00
709	CWSXVEL101C	NCS-VLV-101C EXTERNAL LEAK LARGE	7.2E-08	3.9E-07	6.4E+00
710	HPIXVEL115C	NCS-VLV-115C EXTERNAL LEAK LARGE	7.2E-08	3.9E-07	6.4E+00
711	HPIXVEL111C	NCS-VLV-111C EXTERNAL LEAK LARGE	7.2E-08	3.9E-07	6.4E+00
712	HPIXVEL116C	NCS-VLV-116C EXTERNAL LEAK LARGE	7.2E-08	3.9E-07	6.4E+00
713	CWSCVEL016C	NCS-VLV-016C EXTERNAL LEAK LARGE	4.8E-08	2.6E-07	6.4E+00
714	CWSPNELCWC	NCS CWS TRAIN C PIPING EXTERNAL LEAK LARGE	6.0E-10	3.2E-09	6.4E+00
715	NCCMVCD414	VWS-MOV-414 FAIL TO CLOSE	1.0E-03	5.1E-03	6.1E+00
716	NCCMVOD242	NCS-MOV-242 FAIL TO OPEN	1.0E-03	5.1E-03	6.1E+00
717	NCCMVOD407	VWS-MOV-407 FAIL TO OPEN	1.0E-03	5.1E-03	6.1E+00
718	NCCMVOD241	NCS-MOV-241 FAIL TO OPEN	1.0E-03	5.1E-03	6.1E+00
719	NCCMVPR407	VWS-MOV-407 PLUG	2.4E-06	1.2E-05	6.1E+00
720	NCCMVPR241	NCS-MOV-241 PLUG	2.4E-06	1.2E-05	6.1E+00
721	NCCMVPR242	NCS-MOV-242 PLUG	2.4E-06	1.2E-05	6.1E+00
722	NCCMVOM414	VWS-MOV-414 SPURIOUS OPEN	9.6E-07	4.9E-06	6.1E+00
723	NCCMVCM407	VWS-MOV-407 SPURIOUS CLOSE	9.6E-07	4.9E-06	6.1E+00
724	NCCMVCM241	NCS-MOV-241 SPURIOUS CLOSE	9.6E-07	4.9E-06	6.1E+00

Table 19.1-45 Basic Events (Hardware Failure, Human Error) RAW for LRF (Sheet 42 of 60)

Rank	Basic Event ID	Basic Event Description	Basic Event Probability	FV Importance	RAW
725	NCCMVCM242	NCS-MOV-242 SPURIOUS CLOSE	9.6E-07	4.9E-06	6.1E+00
726	NCCMVIL414	VWS-MOV-414 INTERNAL LEAK LARGE	7.2E-08	3.7E-07	6.1E+00
727	NCCAVOD022	NCS-PCV-022 FAIL TO OPEN	1.2E-03	6.2E-03	6.1E+00
728	NCCOO04022	(HE) NCC MISCALIBRATION OF NCS-PCA-022	8.0E-04	4.1E-03	6.1E+00
729	NCCIPFF022	NCS-PCA-022 FAIL TO OPERATE	2.7E-05	1.4E-04	6.1E+00
730	NCCAVCM022	NCS-PCV-022 SPURIOUS CLOSE	4.8E-06	2.5E-05	6.1E+00
731	NCCAVOM056B	NCS-RCV-056B SPURIOUS OPEN	4.8E-06	2.5E-05	6.1E+00
732	NCCSVOM003B	NCS-SRV-003B SPURIOUS OPEN	4.8E-06	2.5E-05	6.1E+00
733	NCCAVPR022	NCS-PCV-022 PLUG	2.4E-06	1.2E-05	6.1E+00
734	NCCAVIL056B	NCS-RCV-056B INTERNAL LEAK LARGE	1.2E-07	6.2E-07	6.1E+00
735	NCCTKEL001B	NCS-MTK-001B (B-CCW SURGE TANK) EXTERNAL LEAK LARGE	7.2E-08	3.7E-07	6.1E+00
736	NCCXVEL045B	NCS-VLV-045B EXTERNAL LEAK LARGE	7.2E-08	3.7E-07	6.1E+00
737	NCCAVEL056B	NCS-RCV-056B EXTERNAL LEAK LARGE	2.2E-08	1.1E-07	6.1E+00
738	NCCAVEL022	NCS-PCV-022 EXTERNAL LEAK LARGE	2.2E-08	1.1E-07	6.1E+00
739	NCCPNELPIPE1	NCS B-CCW SURGE TANK PRESSURIZING LINE PIPING EXTERNAL LEAK LARGE	6.0E-10	3.1E-09	6.1E+00
740	NCCMVOD403	VWS-MOV-403 FAIL TO OPEN	1.0E-03	5.1E-03	6.1E+00
741	NCCMVOD422	VWS-MOV-422 FAIL TO OPEN	1.0E-03	5.1E-03	6.1E+00
742	NCCCVOD421	VWS-VLV-421 FAIL TO OPEN	1.2E-05	6.2E-05	6.1E+00
743	NCCCVPR421	VWS-VLV-421 PLUG	2.4E-06	1.2E-05	6.1E+00
744	NCCMVPR403	VWS-MOV-403 PLUG	2.4E-06	1.2E-05	6.1E+00
745	NCCMVPR422	VWS-MOV-422 PLUG	2.4E-06	1.2E-05	6.1E+00
746	NCCMVCM403	VWS-MOV-403 SPURIOUS CLOSE	9.6E-07	4.9E-06	6.1E+00
747	NCCMVCM422	VWS-MOV-422 SPURIOUS CLOSE	9.6E-07	4.9E-06	6.1E+00

Table 19.1-45 Basic Events (Hardware Failure, Human Error) RAW for LRF (Sheet 43 of 60)

Rank	Basic Event ID	Basic Event Description	Basic Event Probability	FV Importance	RAW
748	NCCRIEL001C	VCS-MAH-001C (C-CONTAINMENT FAN COOLER UNIT) EXTERNAL LEAK LARGE	7.2E-07	3.7E-06	6.1E+00
749	NCCRIEL001B	VCS-MAH-001B (B-CONTAINMENT FAN COOLER UNIT) EXTERNAL LEAK LARGE	7.2E-07	3.7E-06	6.1E+00
750	NCCRIEL001A	VCS-MAH-001A (A-CONTAINMENT FAN COOLER UNIT) EXTERNAL LEAK LARGE	7.2E-07	3.7E-06	6.1E+00
751	NCCRIEL001D	VCS-MAH-001D (D-CONTAINMENT FAN COOLER UNIT) EXTERNAL LEAK LARGE	7.2E-07	3.7E-06	6.1E+00
752	NCCXVEL413A	VWS-VLV-413A EXTERNAL LEAK LARGE	7.2E-08	3.7E-07	6.1E+00
753	NCCXVEL412D	VWS-VLV-412D EXTERNAL LEAK LARGE	7.2E-08	3.7E-07	6.1E+00
754	NCCXVEL412C	VWS-VLV-412C EXTERNAL LEAK LARGE	7.2E-08	3.7E-07	6.1E+00
755	NCCXVEL415	VWS-VLV-415 EXTERNAL LEAK LARGE	7.2E-08	3.7E-07	6.1E+00
756	NCCXVEL413D	VWS-VLV-413D EXTERNAL LEAK LARGE	7.2E-08	3.7E-07	6.1E+00
757	NCCXVEL413C	VWS-VLV-413C EXTERNAL LEAK LARGE	7.2E-08	3.7E-07	6.1E+00
758	NCCXVEL413B	VWS-VLV-413B EXTERNAL LEAK LARGE	7.2E-08	3.7E-07	6.1E+00
759	NCCXVEL412A	VWS-VLV-412A EXTERNAL LEAK LARGE	7.2E-08	3.7E-07	6.1E+00
760	NCCXVEL412B	VWS-VLV-412B EXTERNAL LEAK LARGE	7.2E-08	3.7E-07	6.1E+00
761	NCCCVEL423	VWS-VLV-423 EXTERNAL LEAK LARGE	4.8E-08	2.5E-07	6.1E+00
762	NCCCVEL421	VWS-VLV-421 EXTERNAL LEAK LARGE	4.8E-08	2.5E-07	6.1E+00
763	NCCMVEL242	NCS-MOV-242 EXTERNAL LEAK LARGE	2.4E-08	1.2E-07	6.1E+00
764	NCCMVEL401	VWS-MOV-401 EXTERNAL LEAK LARGE	2.4E-08	1.2E-07	6.1E+00
765	NCCMVEL409	VWS-MOV-409 EXTERNAL LEAK LARGE	2.4E-08	1.2E-07	6.1E+00
766	NCCMVEL403	VWS-MOV-403 EXTERNAL LEAK LARGE	2.4E-08	1.2E-07	6.1E+00
767	NCCMVEL407	VWS-MOV-407 EXTERNAL LEAK LARGE	2.4E-08	1.2E-07	6.1E+00
768	NCCMVEL241	NCS-MOV-241 EXTERNAL LEAK LARGE	2.4E-08	1.2E-07	6.1E+00
769	NCCMVEL411D	VWS-MOV-411D EXTERNAL LEAK LARGE	2.4E-08	1.2E-07	6.1E+00
770	NCCMVEL414	VWS-MOV-414 EXTERNAL LEAK LARGE	2.4E-08	1.2E-07	6.1E+00

Table 19.1-45 Basic Events (Hardware Failure, Human Error) RAW for LRF (Sheet 44 of 60)

Rank	Basic Event ID	Basic Event Description	Basic Event Probability	FV Importance	RAW
771	NCCMVEL422	VWS-MOV-422 EXTERNAL LEAK LARGE	2.4E-08	1.2E-07	6.1E+00
772	NCCMVEL411A	VWS-MOV-411A EXTERNAL LEAK LARGE	2.4E-08	1.2E-07	6.1E+00
773	NCCMVEL411B	VWS-MOV-411B EXTERNAL LEAK LARGE	2.4E-08	1.2E-07	6.1E+00
774	NCCMVEL411C	VWS-MOV-411C EXTERNAL LEAK LARGE	2.4E-08	1.2E-07	6.1E+00
775	NCCAVEL041B	VWS-TCV-041B EXTERNAL LEAK LARGE	2.2E-08	1.1E-07	6.1E+00
776	NCCAVEL041A	VWS-TCV-041A EXTERNAL LEAK LARGE	2.2E-08	1.1E-07	6.1E+00
777	NCCAVEL042A	VWS-TCV-042A EXTERNAL LEAK LARGE	2.2E-08	1.1E-07	6.1E+00
778	NCCAVEL042B	VWS-TCV-042B EXTERNAL LEAK LARGE	2.2E-08	1.1E-07	6.1E+00
779	NCCPNELPIPE2	VWS ALTERNATE CONTAINMENT COOLING LINE PIPING EXTERNAL LEAK LARGE	6.0E-10	3.1E-09	6.1E+00
780	RSSCF4CVOD005-124	CSS-VLV-005A,B,C FAIL TO OPEN (CCF)	2.2E-07	1.1E-06	6.1E+00
781	EPSCF4ATFFS-ALL	SWITCH FAIL TO OPERATE (CCF)	3.8E-05	1.9E-04	6.1E+00
782	EPSCF4IVFFIBC-134	CLASS-1E UPS UNIT A,B,C FAIL TO OPERATE (CCF)	5.0E-07	2.5E-06	6.0E+00
783	NCCOO02CCW	(HE) FAIL TO OPERATE ALTERNATE C/V COOLING BY C/V FAN	2.0E-02	1.0E-01	6.0E+00
784	EPSBSFFMCP1	P1 NON-CLASS 1E 6.9KV SWITCHGEAR FAILURE	5.8E-06	2.9E-05	6.0E+00
785	CWSCF2MVOD020-ALL	NCS-MOV-020C,D FAIL TO OPEN (CCF)	4.7E-05	2.3E-04	6.0E+00
786	CWSCF2MVOD007-ALL	NCS-MOV-007C,D FAIL TO OPEN (CCF)	4.7E-05	2.3E-04	6.0E+00
787	EFWXVEL026B	EFS-VLV-026B EXTERNAL LEAK LARGE	7.2E-08	3.6E-07	5.9E+00
788	EFWPNELTESTB	EFS C,D-EFW PUMP TEST LINE PIPING EXTERNAL LEAK LARGE	6.0E-10	3.0E-09	5.9E+00
789	NCCCF4MVOD411-ALL	VWS-MOV-411A,B,C,D FAIL TO OPEN (CCF)	1.3E-05	6.1E-05	5.9E+00
790	NCCCF4MVOD411-134	VWS-MOV-411A,C,D FAIL TO OPEN (CCF)	4.2E-06	2.0E-05	5.9E+00

Table 19.1-45 Basic Events (Hardware Failure, Human Error) RAW for LRF (Sheet 45 of 60)

Rank	Basic Event ID	Basic Event Description	Basic Event Probability	FV Importance	RAW
791	NCCCF4MVOD411-124	VWS-MOV-411A,B,D FAIL TO OPEN (CCF)	4.2E-06	2.0E-05	5.9E+00
792	NCCCF4MVOD411-234	VWS-MOV-411B,C,D FAIL TO OPEN (CCF)	4.2E-06	2.0E-05	5.9E+00
793	NCCCF4MVOD411-123	VWS-MOV-411A,B,C FAIL TO OPEN (CCF)	4.2E-06	2.0E-05	5.9E+00
794	EPSCF2CBSO52STHP-ALL	EPS 52/STHP1,2 (BREAKER) SPURIOUS OPEN (CCF)	2.8E-07	1.4E-06	5.9E+00
795	EPSCF2CBSO52LCP-ALL	EPS 52/LCP11,21 (BREAKER) SPURIOUS OPEN (CCF)	2.8E-07	1.4E-06	5.9E+00
796	EPSCF2CBSO52STLP-ALL	EPS 52/STLP1,2 (BREAKER) SPURIOUS OPEN (CCF)	2.8E-07	1.4E-06	5.9E+00
797	RSSCF4CVOD005-234	CSS-VLV-005A,C,D FAIL TO OPEN (CCF)	2.2E-07	1.1E-06	5.8E+00
798	EPSCF4IVFFMVI-234	MOV INVERTER B,C,D1 FAIL TO OPERATE (CCF)	5.0E-07	2.4E-06	5.7E+00
799	CWSCF4CVOD016-R-14	NCS-VLV-016A,D FAIL TO RE-OPEN (CCF)	1.0E-07	4.6E-07	5.6E+00
800	SWSCF4CVOD602-R-34	EWS-VLV-602A,D FAIL TO RE-OPEN (CCF)	1.0E-07	4.6E-07	5.6E+00
801	SWSCF4CVOD502-R-34	EWS-VLV-502A,D FAIL TO RE-OPEN (CCF)	1.0E-07	4.6E-07	5.6E+00
802	MSRCF4AVCD515-13	MSS-SMV-515A,C FAIL TO CLOSE (CCF)	5.2E-05	2.4E-04	5.6E+00
803	MSRCF4AVCD515-12	MSS-SMV-515B,C FAIL TO CLOSE (CCF)	5.2E-05	2.4E-04	5.6E+00
804	MSRCF4AVCD515-23	MSS-SMV-515B,C FAIL TO CLOSE (CCF)	5.2E-05	2.4E-04	5.6E+00
805	MSRCF4AVCD515-123	MSS-SMV-515A,B,C FAIL TO CLOSE (CCF)	2.6E-05	1.2E-04	5.6E+00
806	EFWXVEL013B	EFS-VLV-013B EXTERNAL LEAK LARGE	7.2E-08	3.3E-07	5.5E+00
807	EFWCVEL012B	EFS-VLV-012B EXTERNAL LEAK LARGE	4.8E-08	2.2E-07	5.5E+00
808	EFWXVEL026A	EFS-VLV-026A EXTERNAL LEAK LARGE	7.2E-08	3.2E-07	5.4E+00
809	EFWPNELTESTA	EFS A,B-EFW PUMP TEST LINE PIPING EXTERNAL LEAK LARGE	6.0E-10	2.7E-09	5.4E+00
810	EPSCF4CBSOB-ALL	BREAKER (BETWEEN 480V MCC AND MOV 480V MCC) SPURIOUS OPEN (CCF)	1.6E-07	7.0E-07	5.4E+00

Table 19.1-45 Basic Events (Hardware Failure, Human Error) RAW for LRF (Sheet 46 of 60)

Rank	Basic Event ID	Basic Event Description	Basic Event Probability	FV Importance	RAW
811	SWSCF4PMBD001-R-123	EWS-MPP-001B,C,D (ESW PUMP) FAIL TO RE-START (CCF)	1.5E-05	6.5E-05	5.3E+00
812	SWSPMEL001C	EWS-MPP-001C (C-ESW PUMP) EXTERNAL LEAK LARGE	1.9E-07	8.0E-07	5.2E+00
813	EFWCVEL018C	EFS-VLV-018C EXTERNAL LEAK LARGE	4.8E-08	2.0E-07	5.1E+00
814	EFWMVEL014C	EFS-MOV-014C EXTERNAL LEAK LARGE	2.4E-08	9.9E-08	5.1E+00
815	EFWMVEL017C	EFS-MOV-017C EXTERNAL LEAK LARGE	2.4E-08	9.9E-08	5.1E+00
816	EFWPNELSGC	EFS C-SG SUPPLY LINE PIPING EXTERNAL LEAK LARGE	6.0E-10	2.5E-09	5.1E+00
817	EPSCBFO52RAT-AB	EPS 52/RATA,B (BREAKER) FAIL TO OPEN (CCF)	5.0E-06	2.0E-05	5.1E+00
818	EPSCBFO52UAT-AB	EPS 52/UATA,B (BREAKER) FAIL TO OPEN (CCF)	5.0E-06	2.0E-05	5.1E+00
819	EPSCF4CBSC52RAT-12	EPS 52/RATA,B (BREAKER) SPURIOUS CLOSE (CCF)	3.4E-08	1.4E-07	5.1E+00
820	EPSCF4CBSC52UAT-12	EPS 52/UATA,B (BREAKER) SPURIOUS CLOSE (CCF)	3.4E-08	1.4E-07	5.1E+00
821	RSSCF4CVOD005-123	CSS-VLV-005B,C,D FAIL TO OPEN (CCF)	2.2E-07	8.7E-07	4.9E+00
822	CWSCF4PCBD001-R-234	NCS-MPP-001B,C,D (CCW PUMP) FAIL TO RE-START (CCF)	8.4E-06	3.3E-05	4.9E+00
823	MSRAVCD550D	MSS-TCV-550D FAIL TO CLOSE	1.2E-03	4.6E-03	4.8E+00
824	MSRAVCD550K	MSS-TCV-550K FAIL TO CLOSE	1.2E-03	4.6E-03	4.8E+00
825	MSRAVCD550M	MSS-TCV-550M FAIL TO CLOSE	1.2E-03	4.6E-03	4.8E+00
826	MSRAVCD550F	MSS-TCV-550F FAIL TO CLOSE	1.2E-03	4.6E-03	4.8E+00
827	MSRAVCD550L	MSS-TCV-550L FAIL TO CLOSE	1.2E-03	4.6E-03	4.8E+00
828	MSRAVCD550E	MSS-TCV-550E FAIL TO CLOSE	1.2E-03	4.6E-03	4.8E+00
829	MSRAVCD550A	MSS-TCV-550A FAIL TO CLOSE	1.2E-03	4.6E-03	4.8E+00

Table 19.1-45 Basic Events (Hardware Failure, Human Error) RAW for LRF (Sheet 47 of 60)

Rank	Basic Event ID	Basic Event Description	Basic Event Probability	FV Importance	RAW
830	MSRAVCD550N	MSS-TCV-550N FAIL TO CLOSE	1.2E-03	4.6E-03	4.8E+00
831	MSRAVCD550G	MSS-TCV-550G FAIL TO CLOSE	1.2E-03	4.6E-03	4.8E+00
832	MSRAVCD550Q	MSS-TCV-550Q FAIL TO CLOSE	1.2E-03	4.6E-03	4.8E+00
833	MSRAVCD550J	MSS-TCV-550J FAIL TO CLOSE	1.2E-03	4.6E-03	4.8E+00
834	MSRAVCD550C	MSS-TCV-550C FAIL TO CLOSE	1.2E-03	4.6E-03	4.8E+00
835	MSRAVCD550P	MSS-TCV-550P FAIL TO CLOSE	1.2E-03	4.6E-03	4.8E+00
836	MSRAVCD550H	MSS-TCV-550H FAIL TO CLOSE	1.2E-03	4.6E-03	4.8E+00
837	MSRAVCD550B	MSS-TCV-550B FAIL TO CLOSE	1.2E-03	4.6E-03	4.8E+00
838	RSSCF4PMAD001-13	RHS-MPP-001A,C (CS/RHR PUMP) FAIL TO START (CCF)	1.3E-05	4.5E-05	4.6E+00
839	EFWCF4MVFC017-24	EFS-MOV-017A,C FAIL TO CONTROL (CCF)	5.6E-07	1.9E-06	4.4E+00
840	EFWCF4MVFC017-12	EFS-MOV-017A,D FAIL TO CONTROL (CCF)	5.6E-07	1.9E-06	4.4E+00
841	RSSRXEL001C	RHS-MHX-001C (C-CS/RHR HX) SHELL EXTERNAL LEAK LARGE	9.6E-08	3.2E-07	4.3E+00
842	RSSCF4MVOD004-134	CSS-MOV-004A,B,D FAIL TO OPEN (CCF)	1.5E-06	4.8E-06	4.3E+00
843	RSSCF4MVOD145-24	NCS-MOV-145B,D FAIL TO OPEN (CCF)	5.7E-06	1.9E-05	4.3E+00
844	RWSCF4SUPR001-24	SIS-SST-001A,C (ESS/CS STRAINER) PLUG DURING OPERATION (CCF)	3.0E-06	9.2E-06	4.1E+00
845	RSSCF4PMSR001-24	RHS-MPP-001A,C (CS/RHR PUMP) FAIL TO RUN DURING FIRST HOUR OF OPERATION (CCF)	3.3E-06	9.9E-06	4.0E+00
846	CHIOO01CHIB	(HE) FAIL TO START THE STANDBY CHARGING INJECTION PUMP B	2.6E-03	7.1E-03	3.8E+00
847	CCWRSA	CCW RECOVERY (AFTER CORE MELT)	1.6E-02	4.4E-02	3.8E+00

Table 19.1-45 Basic Events (Hardware Failure, Human Error) RAW for LRF (Sheet 48 of 60)

Rank	Basic Event ID	Basic Event Description	Basic Event Probability	FV Importance	RAW
848	RSAOO02FWP	(HE) FAIL TO OPERATE FIRE PROTECTION WATER PUMP	8.5E-03	2.4E-02	3.8E+00
849	CFAMVOD011	CSS-MOV-011 FAIL TO OPEN	1.0E-03	2.8E-03	3.8E+00
850	CFAORPRFSO1	ORIFICE FSO1 PLUG	2.4E-05	6.8E-05	3.8E+00
851	CFACVOD012	CSS-VLV-012 FAIL TO OPEN	1.2E-05	3.4E-05	3.8E+00
852	CFAMVPR011	CSS-MOV-011 PLUG	2.4E-06	6.8E-06	3.8E+00
853	CFACVPR012	CSS-VLV-012 PLUG	2.4E-06	6.8E-06	3.8E+00
854	CFAMVOD010	FSS-MOV-010 FAIL TO OPEN	1.0E-03	2.7E-03	3.7E+00
855	RSSMVOD004B	CSS-MOV-004B FAIL TO OPEN	9.0E-04	2.5E-03	3.7E+00
856	CFAFMPRFSF1	FLOW METER FSF1 PLUG	2.4E-05	6.6E-05	3.7E+00
857	CFAXVPRFSV1	MANUAL VALVE FSV1 PLUG	2.4E-06	6.6E-06	3.7E+00
858	CFAMVPR010	FSS-MOV-010 PLUG	2.4E-06	6.6E-06	3.7E+00
859	HPIOO02FWBD-S	(HE) FAIL TO OPEN SAFETY DEPRESSURIZATION VALVE	2.6E-03	6.9E-03	3.7E+00
860	RWSCF4SUPR001-12	SIS-SST-001B,C (ESS/CS STRAINER) PLUG DURING OPERATION (CCF)	3.0E-06	8.0E-06	3.7E+00
861	EFWPTAD001A	EFS-MPP-001A (A-EFW PUMP) FAIL TO START	6.5E-03	1.8E-02	3.7E+00
862	EFWPTSR001A	EFS-MPP-001A (A-EFW PUMP) FAIL TO RUN DURING FIRST HOUR OF OPERATION	2.4E-03	6.4E-03	3.7E+00
863	EFWPTLR001A	EFS-MPP-001A (A-EFW PUMP) FAIL TO RUN AFTER FIRST HOUR OF OPERATION	1.5E-03	4.1E-03	3.7E+00
864	EFWPTEL001A	EFS-MPP-001A (A-EFW PUMP) EXTERNAL LEAK LARGE	2.2E-07	5.8E-07	3.7E+00
865	RSSCF4MVOD004-12	CSS-MOV-004B,C FAIL TO OPEN (CCF)	5.7E-06	1.5E-05	3.7E+00
866	RSSXVEL144C	NCS-VLV-144C EXTERNAL LEAK LARGE	7.2E-08	1.9E-07	3.6E+00

Table 19.1-45 Basic Events (Hardware Failure, Human Error) RAW for LRF (Sheet 49 of 60)

Rank	Basic Event ID	Basic Event Description	Basic Event Probability	FV Importance	RAW
867	RSSXVEL141C	NCS-VLV-141C EXTERNAL LEAK LARGE	7.2E-08	1.9E-07	3.6E+00
868	CWSXVEL005C	NCS-VLV-005C EXTERNAL LEAK LARGE	7.2E-08	1.9E-07	3.6E+00
869	RSSXVEL128C	NCS-VLV-128C EXTERNAL LEAK LARGE	7.2E-08	1.9E-07	3.6E+00
870	RSSXVEL125C	NCS-VLV-125C EXTERNAL LEAK LARGE	7.2E-08	1.9E-07	3.6E+00
871	RSSXVEL131C	NCS-VLV-131C EXTERNAL LEAK LARGE	7.2E-08	1.9E-07	3.6E+00
872	CWSMVEL020C	NCS-MOV-020C EXTERNAL LEAK LARGE	2.4E-08	6.2E-08	3.6E+00
873	CWSMVEL007C	NCS-MOV-007C EXTERNAL LEAK LARGE	2.4E-08	6.2E-08	3.6E+00
874	EFWMVOD103A	EFS-MOV-103A FAIL TO OPEN	9.6E-04	2.5E-03	3.6E+00
875	RSSOO01CSP	(HE) FAIL TO START CV SPRAY SYSTEM	5.0E-03	1.3E-02	3.6E+00
876	RSSCF4PMLR001-24	RHS-MPP-001A,C (CS/RHR PUMP) FAIL TO RUN AFTER FIRST HOUR OF OPERATION (CCF)	1.2E-06	2.9E-06	3.5E+00
877	RTPDASF	DAS FAILURE	1.0E-02	2.6E-02	3.5E+00
878	SWSCF2PMYR001BD-ALL	EWS-MPP-001B,D (ESW PUMP) FAIL TO RUN (CCF)	8.9E-06	2.2E-05	3.5E+00
879	EFWTMTA001A	EFS-MPP-001A (A-EFW PUMP) TEST & MAINTENANCE	5.0E-03	1.2E-02	3.5E+00
880	RSSCF4MVOD004-14	CSS-MOV-004A,B FAIL TO OPEN (CCF)	5.7E-06	1.4E-05	3.4E+00
881	SWSCF2PMBD001BD-ALL	EWS-MPP-001B,D (ESW PUMP) FAIL TO START (CCF)	1.4E-04	3.3E-04	3.4E+00
882	EFWCF4CVOD018-34	EFS-VLV-018A,D FAIL TO OPEN (CCF)	2.3E-07	5.4E-07	3.4E+00
883	EFWCF4CVOD018-24	EFS-VLV-018A,C FAIL TO OPEN (CCF)	2.3E-07	5.4E-07	3.4E+00
884	EFWCF4CVOD012-23	EFS-VLV-012A,C FAIL TO OPEN (CCF)	2.3E-07	5.4E-07	3.4E+00
885	RSSCVOD005B	CSS-VLV-005B FAIL TO OPEN	1.0E-05	2.4E-05	3.3E+00
886	EPSBSFFMCB	B-CLASS 1E 6.9KV SWITCHGEAR FAILURE	5.8E-06	1.3E-05	3.3E+00
887	RSSCVPR005B	CSS-VLV-005B PLUG	2.4E-06	5.6E-06	3.3E+00

Table 19.1-45 Basic Events (Hardware Failure, Human Error) RAW for LRF (Sheet 50 of 60)

Rank	Basic Event ID	Basic Event Description	Basic Event Probability	FV Importance	RAW
888	SGNCF4ICVR0012-13	CONTAINMENT PRESSURE SENSOR P10012A,P10012C CCF	8.5E-07	2.0E-06	3.3E+00
889	SGNCF4ICVR0012-14	CONTAINMENT PRESSURE SENSOR P10012A,P10012D CCF	8.5E-07	2.0E-06	3.3E+00
890	SGNCF4ICVR0012-12	CONTAINMENT PRESSURE SENSOR P10012A,P10012B CCF	8.5E-07	2.0E-06	3.3E+00
891	SGNCF4ICVR0012-24	CONTAINMENT PRESSURE SENSOR P10012B,P10012D CCF	8.5E-07	2.0E-06	3.3E+00
892	SGNCF4ICVR0012-23	CONTAINMENT PRESSURE SENSOR P10012B,P10012C CCF	8.5E-07	2.0E-06	3.3E+00
893	SGNCF4ICVR0012-34	CONTAINMENT PRESSURE SENSOR P10012C,P10012D CCF	8.5E-07	2.0E-06	3.3E+00
894	SGNST-BOP2	BO-SIGNAL (TRAIN P2) FAILURE	1.2E-03	2.8E-03	3.3E+00
895	RSSCF4MVOD004-24	CSS-MOV-004A,C FAIL TO OPEN (CCF)	5.7E-06	1.3E-05	3.3E+00
896	EPSDLLRAACB-L2	B-AAC FAIL TO LOAD AND RUN AFTER FIRST HOUR OF OPERATION	1.8E-02	4.1E-02	3.3E+00
897	EPSDLADAACB	B-AAC FAIL TO START	4.7E-03	1.1E-02	3.3E+00
898	EPSSEFFAACB	B-AAC SEQUENCER FAIL TO OPERATE	2.9E-03	6.7E-03	3.3E+00
899	EPSDLSRAACB	B-AAC FAIL TO LOAD AND RUN DURING FIRST HOUR OF OPERATION	2.8E-03	6.5E-03	3.3E+00
900	EPSCBFC52AACBP	EPS 52/AACBP (BREAKER) FAIL TO CLOSE	3.7E-04	8.7E-04	3.3E+00
901	EPSCBSO52AACBP	EPS 52/AACBP (BREAKER) SPURIOUS OPEN	3.1E-06	7.2E-06	3.3E+00
902	RSSCF4MVOD004-13	CSS-MOV-004B,D FAIL TO OPEN (CCF)	5.7E-06	1.3E-05	3.3E+00
903	EPSBSFFDCCD1	D1-CLASS 1E DC SWITCHBOARD	5.8E-06	1.3E-05	3.2E+00
904	EPSCBFO52RAT-A	EPS 52/RATA (BREAKER) FAIL TO OPEN	3.5E-04	7.8E-04	3.2E+00

Table 19.1-45 Basic Events (Hardware Failure, Human Error) RAW for LRF (Sheet 51 of 60)

Rank	Basic Event ID	Basic Event Description	Basic Event Probability	FV Importance	RAW
905	EPSCBFO52UAT-A	EPS 52/UATA (BREAKER) FAIL TO OPEN	3.5E-04	7.8E-04	3.2E+00
906	EPSBSFFDCCA	A-CLASS 1E DC SWITCHBOARD	5.8E-06	1.3E-05	3.2E+00
907	EPSCBSC52RATA	EPS 52/RATA (BREAKER) SPURIOUS CLOSE	3.0E-06	6.8E-06	3.2E+00
908	EPSCBSC52UATA	EPS 52/UATA (BREAKER) SPURIOUS CLOSE	3.0E-06	6.8E-06	3.2E+00
909	RSSMVPR004B	CSS-MOV-004B PLUG	2.4E-06	5.4E-06	3.2E+00
910	RSSMVCM004B	CSS-MOV-004B SPURIOUS CLOSE	9.6E-07	2.1E-06	3.2E+00
911	RSSCF4MVOD004-23	CSS-MOV-004C,D FAIL TO OPEN (CCF)	5.7E-06	1.3E-05	3.2E+00
912	EFWCVOD012A	EFS-VLV-012A FAIL TO OPEN	9.5E-06	2.0E-05	3.1E+00
913	EFWXVPR013A	EFS-VLV-013A PLUG	2.4E-06	5.2E-06	3.1E+00
914	EFWCVPR012A	EFS-VLV-012A PLUG	2.4E-06	5.2E-06	3.1E+00
915	RSSXVPR002B	CSS-VLV-002B PLUG	2.4E-06	5.1E-06	3.1E+00
916	EFWXVIL023A	EFS-VLV-023A INTERNAL LEAK LARGE	1.1E-05	2.2E-05	3.1E+00
917	EFWXVEL023A	EFS-VLV-023A EXTERNAL LEAK LARGE	7.2E-08	1.5E-07	3.1E+00
918	EFWXVEL021A	EFS-VLV-021A EXTERNAL LEAK LARGE	7.2E-08	1.5E-07	3.1E+00
919	EFWCVEL022A	EFS-VLV-022A EXTERNAL LEAK LARGE	4.8E-08	1.0E-07	3.1E+00
920	EFWCVEL020A	EFS-VLV-020A EXTERNAL LEAK LARGE	4.8E-08	1.0E-07	3.1E+00
921	EPSTRFF001D	D-CLASS 1E 6.9KV-480V CLASS 1E STATION SERVICE TRANS-FORMER FAIL TO OPERATE	8.2E-06	1.7E-05	3.1E+00
922	EPSBSFFLCD	D-CLASS 1E 480V LOAD CENTER FAILURE	5.8E-06	1.2E-05	3.1E+00
923	RSSCF4CVOD005-134	CSS-VLV-005A,B,D FAIL TO OPEN (CCF)	2.2E-07	4.6E-07	3.1E+00
924	EPSDLLRAACA-L2	A-AAC FAIL TO LOAD AND RUN AFTER FIRST HOUR OF OPERATION	1.8E-02	3.7E-02	3.1E+00
925	EPSDLADAACA	A-AAC FAIL TO START	4.7E-03	1.0E-02	3.1E+00

Table 19.1-45 Basic Events (Hardware Failure, Human Error) RAW for LRF (Sheet 52 of 60)

Rank	Basic Event ID	Basic Event Description	Basic Event Probability	FV Importance	RAW
926	EPSSEFFAACA	A-AAC SEQUENCER FAIL TO OPERATE	2.9E-03	6.1E-03	3.1E+00
927	EPSDLSRAACA	A-AAC FAIL TO LOAD AND RUN DURING FIRST HOUR OF OPERATION	2.8E-03	5.9E-03	3.1E+00
928	EPSCBFC52AACAP	EPS 52/AACAP (BREAKER) FAIL TO CLOSE	3.7E-04	7.9E-04	3.1E+00
929	EPSCBSO52AACAP	EPS 52/AACAP (BREAKER) SPURIOUS OPEN	3.1E-06	6.6E-06	3.1E+00
930	SGNST-BOP1	BO-SIGNAL (TRAIN P1) FAILURE	1.2E-03	2.5E-03	3.1E+00
931	EPSCBSO72DDDD	EPS 72/DDDD (BREAKER) SPURIOUS OPEN	3.0E-06	6.2E-06	3.0E+00
932	EPSCBSO72DDAD	EPS 72/DDAD (BREAKER) SPURIOUS OPEN	3.0E-06	6.2E-06	3.0E+00
933	EPSCF4CBSO72DD2-34	EPS 72/DDBD,DD (BREAKER) SPURIOUS OPEN (CCF)	3.4E-08	6.9E-08	3.0E+00
934	EPSCF4CBSO72DD2-24	EPS 72/DDBA,DD (BREAKER) SPURIOUS OPEN (CCF)	3.4E-08	6.9E-08	3.0E+00
935	EPSCF4CBSO72DD1-13	EPS 72/DDBB,AD (BREAKER) SPURIOUS OPEN (CCF)	3.4E-08	6.9E-08	3.0E+00
936	EPSCF4CBSO72DD1-14	EPS 72/DDBC,AD (BREAKER) SPURIOUS OPEN (CCF)	3.4E-08	6.9E-08	3.0E+00
937	EPSCF4CBSO72DD2-234	EPS 72/DDBA,BD,DD (BREAKER) SPURIOUS OPEN (CCF)	2.9E-08	6.0E-08	3.0E+00
938	EPSCF4CBSO72DD1-134	EPS 72/DDBB,BC,AD (BREAKER) SPURIOUS OPEN (CCF)	2.9E-08	6.0E-08	3.0E+00
939	EPSTMDGAACB	B-AAC TEST & MAINTENANCE	1.2E-02	2.4E-02	3.0E+00
940	EPSCBFC89AACD	EPS 89/AACD (SELECTOR CIRCUIT) FAIL TO CLOSE	3.7E-04	7.2E-04	2.9E+00

Table 19.1-45 Basic Events (Hardware Failure, Human Error) RAW for LRF (Sheet 53 of 60)

Rank	Basic Event ID	Basic Event Description	Basic Event Probability	FV Importance	RAW
941	EPSCBFO52EPSD	EPS 52/EPSD (BREAKER) FAIL TO OPEN	3.7E-04	7.2E-04	2.9E+00
942	EPSCBFC52AACD	EPS 52/AACD (BREAKER) FAIL TO CLOSE	3.7E-04	7.2E-04	2.9E+00
943	EPSCBSO52AACD	EPS 52/AACD (BREAKER) SPURIOUS OPEN	3.1E-06	6.0E-06	2.9E+00
944	EPSCBSO89AACD	EPS 89/AACD (SELECTOR CIRCUIT) SPURIOUS OPEN	3.1E-06	6.0E-06	2.9E+00
945	EPSCBSC52EPSD	EPS 52/EPSD (BREAKER) SPURIOUS CLOSE	3.1E-06	6.0E-06	2.9E+00
946	EPSBSFFMCCD	D-CLASS 1E 480V MCC FAILURE	5.8E-06	1.1E-05	2.9E+00
947	EPSBSFFLCA1	A1-CLASS 1E 480V LOAD CENTER FAILURE	5.8E-06	1.1E-05	2.9E+00
948	EPSBSFFMCCA1	A1-CLASS 1E 480V MCC FAILURE	5.8E-06	1.1E-05	2.9E+00
949	EPSCF4DLLRGTG-12	CLASS-1E GTG B,C FAIL TO RUN AFTER FIRST HOUR OF OPERATION (CCF)	2.5E-04	4.7E-04	2.8E+00
950	EPSCF4DLADGTG-23	CLASS-1E GTG B,C FAIL TO START (CCF)	4.3E-05	7.9E-05	2.8E+00
951	EPSCF4DLSRGTG-12	CLASS-1E GTG B,C FAIL TO RUN DURING FIRST HOUR OF OPERATION (CCF)	4.0E-05	7.3E-05	2.8E+00
952	EPSCF4SEFFGTG-12	CLASS-1E GTG B,C SEQUENCER FAIL TO OPERATE (CCF)	2.5E-05	4.6E-05	2.8E+00
953	EPSCF4CBFC52EPS-34	EPS 52/EPSB,C (BREAKER) FAIL TO CLOSE (CCF)	5.0E-06	9.1E-06	2.8E+00
954	EPSCBFO52UAT-BC	EPS 52/UATB,C (BREAKER) FAIL TO OPEN (CCF)	5.0E-06	9.1E-06	2.8E+00
955	EPSCF4CBSO52EPS-12	EPS 52/EPSB,C (BREAKER) SPURIOUS OPEN (CCF)	3.4E-08	6.2E-08	2.8E+00
956	EPSCF4CBSC52UAT-23	EPS 52/UATB,C (BREAKER) SPURIOUS CLOSE (CCF)	3.4E-08	6.2E-08	2.8E+00

Table 19.1-45 Basic Events (Hardware Failure, Human Error) RAW for LRF (Sheet 54 of 60)

Rank	Basic Event ID	Basic Event Description	Basic Event Probability	FV Importance	RAW
957	MSPMLWTH	WATER HUMMER IN STEAM LINE	1.0E-02	1.8E-02	2.8E+00
958	CFAFMFFFSF1	FLOW METER FSF1 RUPTURE	7.2E-07	1.3E-06	2.8E+00
959	CFAXVELFSV1	MANUAL VALVE FSV1 EXTERNAL LEAK LARGE	7.2E-08	1.3E-07	2.8E+00
960	CFAMVEL010	FSS-MOV-010 EXTERNAL LEAK LARGE	2.4E-08	4.4E-08	2.8E+00
961	CFAPNELPIPE4	FROM FWT (FIRE SUPPRESSION WATER TANK) TO TIE LINE PIPING EXTERNAL LEAK LARGE	6.0E-10	1.1E-09	2.8E+00
962	EFWMVPR103A	EFS-MOV-103A PLUG	2.4E-06	4.4E-06	2.8E+00
963	EFWMVCM103A	EFS-MOV-103A SPURIOUS CLOSE	9.6E-07	1.8E-06	2.8E+00
964	EFWMVEL103A	EFS-MOV-103A EXTERNAL LEAK LARGE	2.4E-08	4.4E-08	2.8E+00
965	EFWPNELSTA	EFS A-T/D EFW PUMP STEAM SUPPLY LINE PIPING EXTERNAL LEAK LARGE	6.0E-10	1.1E-09	2.8E+00
966	RSSCF4CVOD005-24	CSS-VLV-005A,C FAIL TO OPEN (CCF)	2.0E-07	3.6E-07	2.8E+00
967	RSSCF4CVOD004-24	RHS-VLV-004A,C FAIL TO OPEN (CCF)	2.0E-07	3.6E-07	2.8E+00
968	RSSCF4RHPR001-24	RHS-MHX-001A,C(CS/RHR HX) PLUG / FOUL (CCF)	1.7E-07	3.1E-07	2.8E+00
969	EFWXVPR009A	EFS-VLV-009A PLUG	2.4E-06	4.3E-06	2.8E+00
970	CWSCF2PCBD001BD-ALL	NCS-MPP-001B,D (CCW PUMP) FAIL TO START (CCF)	7.5E-05	1.3E-04	2.8E+00
971	EPSTMDGAACA	A-AAC TEST & MAINTENANCE	1.2E-02	2.1E-02	2.8E+00
972	CWSCF2PCYR001BD-ALL	NCS-MPP-001B,D (CCW PUMP) FAIL TO RUN (CCF)	5.0E-06	8.7E-06	2.7E+00
973	EPSCBSO52LCD	EPS 52/LCD (BREAKER) SPURIOUS OPEN	3.0E-06	5.2E-06	2.7E+00
974	RSSCF2MVCD145-ALL	NCS-MOV-145C,D FAIL TO CLOSE (CCF)	4.7E-05	8.0E-05	2.7E+00
975	CHIPMBD001B-R	CVS-MPP-001B (B-CHI PUMP) FAIL TO RE-START	1.8E-03	3.0E-03	2.7E+00

Table 19.1-45 Basic Events (Hardware Failure, Human Error) RAW for LRF (Sheet 55 of 60)

Rank	Basic Event ID	Basic Event Description	Basic Event Probability	FV Importance	RAW
976	SWSCF4PMBD001-R-23	EWS-MPP-001B,C (ESW PUMP) FAIL TO RE-START (CCF)	7.1E-05	1.2E-04	2.7E+00
977	RSSCF4CVOD005-23	CSS-VLV-005C,D FAIL TO OPEN (CCF)	2.0E-07	3.3E-07	2.7E+00
978	RSSCF4PMAD001-34	RHS-MPP-001A,B (CS/RHR PUMP) FAIL TO START (CCF)	1.3E-05	2.1E-05	2.7E+00
979	EPSCF4DLLRGTG-24	CLASS-1E GTG A,C FAIL TO RUN AFTER FIRST HOUR OF OPERATION (CCF)	2.5E-04	4.2E-04	2.7E+00
980	EPSCF4DLADGTG-13	CLASS-1E GTG A,C FAIL TO START (CCF)	4.3E-05	7.1E-05	2.7E+00
981	EPSCF4DLSRGTG-24	CLASS-1E GTG A,C FAIL TO RUN DURING FIRST HOUR OF OPERATION (CCF)	4.0E-05	6.6E-05	2.7E+00
982	EPSCF4SEFFGTG-24	CLASS-1E GTG A,C SEQUENCER FAIL TO OPERATE (CCF)	2.5E-05	4.1E-05	2.7E+00
983	EPSCF4CBFC52EPS-23	EPS 52/EPSA,C (BREAKER) FAIL TO CLOSE (CCF)	5.0E-06	8.2E-06	2.7E+00
984	EPSCF4CBSO52EPS-24	EPS 52/EPSA,C (BREAKER) SPURIOUS OPEN (CCF)	3.4E-08	5.6E-08	2.7E+00
985	RSSCF4CVOD005-12	CSS-VLV-005B,C FAIL TO OPEN (CCF)	2.0E-07	3.3E-07	2.6E+00
986	EPSCBFC89AACA	EPS 89/AACA (SELECTOR CIRCUIT) FAIL TO CLOSE	3.7E-04	6.0E-04	2.6E+00
987	EPSCBFO52EPSA	EPS 52/EPSA (BREAKER) FAIL TO OPEN	3.7E-04	6.0E-04	2.6E+00
988	EPSCBFC52AACA	EPS 52/AACA (BREAKER) FAIL TO CLOSE	3.7E-04	6.0E-04	2.6E+00
989	CWSCF4PCBD001-R-34	NCS-MPP-001B,C (CCW PUMP) FAIL TO RE-START (CCF)	3.9E-05	6.4E-05	2.6E+00
990	EPSCBSO52AACA	EPS 52/AACA (BREAKER) SPURIOUS OPEN	3.1E-06	5.0E-06	2.6E+00
991	EPSCBSO89AACA	EPS 89/AACA (SELECTOR CIRCUIT) SPURIOUS OPEN	3.1E-06	5.0E-06	2.6E+00

Table 19.1-45 Basic Events (Hardware Failure, Human Error) RAW for LRF (Sheet 56 of 60)

Rank	Basic Event ID	Basic Event Description	Basic Event Probability	FV Importance	RAW
992	EPSCBSC52EPSA	EPS 52/EPSA (BREAKER) SPURIOUS CLOSE	3.1E-06	5.0E-06	2.6E+00
993	EPSCF4DLLRGTG-34	CLASS-1E GTG A,D FAIL TO RUN AFTER FIRST HOUR OF OPERATION (CCF)	2.5E-04	4.0E-04	2.6E+00
994	EPSCF4DLADGTG-14	CLASS-1E GTG A,D FAIL TO START (CCF)	4.3E-05	6.8E-05	2.6E+00
995	EPSCF4DLSRGTG-34	CLASS-1E GTG A,D FAIL TO RUN DURING FIRST HOUR OF OPERATION (CCF)	4.0E-05	6.4E-05	2.6E+00
996	EPSCF4SEFFGTG-34	CLASS-1E GTG A,D SEQUENCER FAIL TO OPERATE (CCF)	2.5E-05	4.0E-05	2.6E+00
997	EPSCF4CBFC52EPS-12	EPS 52/EPS A,D (BREAKER) FAIL TO CLOSE (CCF)	5.0E-06	7.9E-06	2.6E+00
998	EPSCF4CBSO52EPS-34	EPS 52/EPSA,D (BREAKER) SPURIOUS OPEN (CCF)	3.4E-08	5.3E-08	2.6E+00
999	EPSCBSO52LLAA	EPS 52/LLAA (BREAKER) SPURIOUS OPEN	3.1E-06	4.9E-06	2.6E+00
1000	EPSCBSO52LLDA	EPS 52/LLDA (BREAKER) SPURIOUS OPEN	3.1E-06	4.9E-06	2.6E+00
1001	EPSCBSO52LCA1	EPS 52/LCA1 (BREAKER) SPURIOUS OPEN	3.1E-06	4.9E-06	2.6E+00
1002	MSPRVCD515	MSS-PCV-515 FAIL TO RE-CLOSE	1.0E-03	1.6E-03	2.6E+00
1003	HPIOO02FWBD	(HE) FAIL TO OPEN SAFETY DEPRESSURIZATION VALVE AND START SAFETY INJECTION PUMP	3.8E-03	5.9E-03	2.6E+00
1004	EPSCBSO52STLD	EPS 52/STLD (BREAKER) SPURIOUS OPEN	3.0E-06	4.5E-06	2.5E+00
1005	EPSCBSO52STHD	EPS 52/STHD (BREAKER) SPURIOUS OPEN	3.0E-06	4.5E-06	2.5E+00

Table 19.1-45 Basic Events (Hardware Failure, Human Error) RAW for LRF (Sheet 57 of 60)

Rank	Basic Event ID	Basic Event Description	Basic Event Probability	FV Importance	RAW
1006	EPSBSFFDCCC	C-CLASS 1E DC SWITCHBOARD	5.8E-06	8.6E-06	2.5E+00
1007	EFWPTAD001D	EFS-MPP-001D (D-EFW PUMP) FAIL TO START	6.5E-03	9.8E-03	2.5E+00
1008	EFWPTSR001D	EFS-MPP-001D (D-EFW PUMP) FAIL TO RUN DURING FIRST HOUR OF OPERATION	2.4E-03	3.6E-03	2.5E+00
1009	EFWPTLR001D	EFS-MPP-001D (D-EFW PUMP) FAIL TO RUN AFTER FIRST HOUR OF OPERATION	1.5E-03	2.3E-03	2.5E+00
1010	EFWPTEL001D	EFS-MPP-001D (D-EFW PUMP) EXTERNAL LEAK LARGE	2.2E-07	3.2E-07	2.5E+00
1011	EFWMVOD103D	EFS-MOV-103D FAIL TO OPEN	9.6E-04	1.4E-03	2.4E+00
1012	MSPMVCD507A	MSS-MOV-507A FAIL TO CLOSE	1.0E-03	1.4E-03	2.4E+00
1013	HPICF4PMAD001-234	SIS-MPP-001A,C,D (SI PUMP) FAIL TO START (CCF)	9.5E-06	1.3E-05	2.4E+00
1014	RSSCF4CVOD005-14	CSS-VLV-005A,B FAIL TO OPEN (CCF)	2.0E-07	2.6E-07	2.3E+00
1015	RSSCF4CVOD005-13	CSS-VLV-005B,D FAIL TO OPEN (CCF)	2.0E-07	2.6E-07	2.3E+00
1016	RSSCVEL005B	CSS-VLV-005B EXTERNAL LEAK LARGE	4.8E-08	6.4E-08	2.3E+00
1017	CFAMVEL011	CSS-MOV-011 EXTERNAL LEAK LARGE	2.4E-08	3.2E-08	2.3E+00
1018	CFAPNELPIPE2	FROM TIE LINE TO CSS-VLV-012 PIPING EXTERNAL LEAK LARGE	6.0E-10	7.9E-10	2.3E+00
1019	RSSCF4MVOD145-14	NCS-MOV-145A,B FAIL TO OPEN (CCF)	5.7E-06	7.3E-06	2.3E+00
1020	MSRAVCD515A	MSS-SMV-515A FAIL TO CLOSE	7.9E-04	9.9E-04	2.3E+00
1021	MSRAVOM565	MSS-HCV-565 SPURIOUS OPEN	4.8E-06	5.9E-06	2.2E+00
1022	MSRAVOM515A	MSS-SMV-515A SPURIOUS OPEN	4.8E-06	5.9E-06	2.2E+00
1023	MSRAVIL515A	MSS-SMV-515A INTERNAL LEAK LARGE	1.2E-07	1.5E-07	2.2E+00
1024	MSRAVIL565	MSS-HCV-565 INTERNAL LEAK LARGE	1.2E-07	1.5E-07	2.2E+00

Table 19.1-45 Basic Events (Hardware Failure, Human Error) RAW for LRF (Sheet 58 of 60)

Rank	Basic Event ID	Basic Event Description	Basic Event Probability	FV Importance	RAW
1025	EFWCF2PMAD001BC-ALL	EFS-MPP-001B,C (EFW PUMP) FAIL TO START (CCF)	2.2E-04	2.7E-04	2.2E+00
1026	HVACF2AHSR401-ALL	VRS-MAH-401B,C (EFW PUMP AIR HANDLING UNIT) FAIL TO RUN DURING FIRST HOUR OF OPERATION (CCF)	1.2E-04	1.4E-04	2.2E+00
1027	VCWCF2CHYR001-ALL	VWS-MEQ-001B,C (ESSENTIAL CHILLER UNIT) FAIL TO RUN (CCF)	1.0E-04	1.2E-04	2.2E+00
1028	CWSCF4MVCD007-ALL	NCS-MOV-007A,B,C,D FAIL TO CLOSE (CCF)	1.3E-05	1.5E-05	2.2E+00
1029	CWSCF4MVCD020-ALL	NCS-MOV-020A,B,C,D FAIL TO CLOSE (CCF)	1.3E-05	1.5E-05	2.2E+00
1030	EFWTMTA001D	EFS-MPP-001D (D-EFW PUMP) TEST & MAINTENANCE	5.0E-03	5.9E-03	2.2E+00
1031	HVACF2AHAD401-ALL	VRS-MAH-401B,C (EFW PUMP AIR HANDLING UNIT) FAIL TO START (CCF)	3.8E-05	4.3E-05	2.1E+00
1032	SWSCF4PMBD001-R-24	EWS-MPP-001A,C (ESW PUMP) FAIL TO RE-START (CCF)	7.1E-05	8.1E-05	2.1E+00
1033	RWSCF4SUPR001-14	SIS-SST-001A,B (ESS/CS STRAINER) PLUG DURING OPERATION (CCF)	3.0E-06	3.3E-06	2.1E+00
1034	HPICF4PMSR001-234	SIS-MPP-001A,C,D (SI PUMP) FAIL TO RUN DURING FIRST HOUR OF OPERATION (CCF)	3.3E-06	3.6E-06	2.1E+00
1035	RSSCF4PMSR001-14	RHS-MPP-001A,B (CS/RHR PUMP) FAIL TO RUN DURING FIRST HOUR OF OPERATION (CCF)	3.3E-06	3.6E-06	2.1E+00
1036	CWSCF4PCBD001-R-13	NCS-MPP-001A,C (CCW PUMP) FAIL TO RE-START (CCF)	3.9E-05	4.2E-05	2.1E+00

Table 19.1-45 Basic Events (Hardware Failure, Human Error) RAW for LRF (Sheet 59 of 60)

Rank	Basic Event ID	Basic Event Description	Basic Event Probability	FV Importance	RAW
1037	EFWCVOD012D	EFS-VLV-012D FAIL TO OPEN	9.5E-06	1.0E-05	2.1E+00
1038	EFWXVPR013D	EFS-VLV-013D PLUG	2.4E-06	2.6E-06	2.1E+00
1039	EFWCVPR012D	EFS-VLV-012D PLUG	2.4E-06	2.6E-06	2.1E+00
1040	EFWCF2PMSR001BC-ALL	EFS-MPP-001B,C (EFW PUMP) FAIL TO RUN DURING FIRST HOUR OF OPERATION (CCF)	1.7E-05	1.8E-05	2.1E+00
1041	EFWXVIL023D	EFS-VLV-023D INTERNAL LEAK LARGE	1.1E-05	1.1E-05	2.1E+00
1042	EFWXVEL021D	EFS-VLV-021D EXTERNAL LEAK LARGE	7.2E-08	7.6E-08	2.1E+00
1043	EFWXVEL023D	EFS-VLV-023D EXTERNAL LEAK LARGE	7.2E-08	7.6E-08	2.1E+00
1044	EFWCVEL022D	EFS-VLV-022D EXTERNAL LEAK LARGE	4.8E-08	5.1E-08	2.1E+00
1045	EFWCVEL020D	EFS-VLV-020D EXTERNAL LEAK LARGE	4.8E-08	5.1E-08	2.1E+00
1046	EPSCF4DLLRGTG-13	CLASS-1E GTG B,D FAIL TO RUN AFTER FIRST HOUR OF OPERATION (CCF)	2.5E-04	2.6E-04	2.0E+00
1047	EPSCF4DLADGTG-24	CLASS-1E GTG B,D FAIL TO START (CCF)	4.3E-05	4.4E-05	2.0E+00
1048	EPSCF4DLSRGTG-13	CLASS-1E GTG B,D FAIL TO RUN DURING FIRST HOUR OF OPERATION (CCF)	4.0E-05	4.1E-05	2.0E+00
1049	EPSCF4SEFFGTG-13	CLASS-1E GTG B,D SEQUENCER FAIL TO OPERATE (CCF)	2.5E-05	2.6E-05	2.0E+00
1050	EPSCF4CBFC52EPS-14	EPS 52/EPSB,D (BREAKER) FAIL TO CLOSE (CCF)	5.0E-06	5.1E-06	2.0E+00
1051	EPSCF4CBSO52EPS-13	EPS 52/EPSB,D (BREAKER) SPURIOUS OPEN (CCF)	3.4E-08	3.5E-08	2.0E+00
1052	EPSCBFO52RAT-BC	EPS 52/RATB,C (BREAKER) FAIL TO OPEN (CCF)	5.0E-06	5.1E-06	2.0E+00
1053	EPSCF4CBSC52RAT-23	EPS 52/RATB,C (BREAKER) SPURIOUS CLOSE (CCF)	3.4E-08	3.4E-08	2.0E+00
1054	EFWCVEL018B	EFS-VLV-018B EXTERNAL LEAK LARGE	4.8E-08	4.9E-08	2.0E+00

Table 19.1-45 Basic Events (Hardware Failure, Human Error) RAW for LRF (Sheet 60 of 60)

Rank	Basic Event ID	Basic Event Description	Basic Event Probability	FV Importance	RAW
1055	EFWMVEL014B	EFS-MOV-014B EXTERNAL LEAK LARGE	2.4E-08	2.4E-08	2.0E+00
1056	EFWMVEL017B	EFS-MOV-017B EXTERNAL LEAK LARGE	2.4E-08	2.4E-08	2.0E+00
1057	EFWPNELSGB	EFS B-SG SUPPLY LINE PIPING EXTERNAL LEAK LARGE	6.0E-10	6.1E-10	2.0E+00

Table 19.1-46 Common Cause Failure FV Importance for LRF

Rank	Basic Event ID	Basic Event Description	Basic Event Probability	FV Importance	RAW
1	SGNBTSWCCF2	GROUP-2 APPLICATION SOFTWARE CCF	1.0E-05	1.7E-01	1.7E+04
2	EPSCF4DLLRGTG-ALL	CLASS-1E GTG A,B,C,D FAIL TO RUN AFTER FIRST HOUR OF OPERATION (CCF)	9.9E-04	1.4E-01	1.5E+02
3	RSSCF4MVOD145-ALL	NCS-MOV-145A,B,C,D FAIL TO OPEN (CCF)	8.4E-05	9.7E-02	1.2E+03
4	SGNBTHWCCF	DIGITAL I&C HARDWARE CCF	2.1E-06	4.6E-02	2.2E+04
5	EPSCF2DLLRAAC-ALL	AAC A,B FAIL TO RUN AFTER FIRST HOUR OF OPERATION (CCF)	1.5E-03	4.5E-02	3.2E+01
6	RTPBTSWCCF	BASIC SOFTWARE CCF	1.0E-07	3.7E-02	3.6E+05
7	SGNBTSWCCF3	NON-SAFETY (PCMS) APPLICATION SOFTWARE CCF	1.0E-04	3.2E-02	3.2E+02
8	EPSCF4DLADGTG-ALL	CLASS-1E GTG A,B,C,D FAIL TO START (CCF)	2.1E-04	3.1E-02	1.5E+02
9	EPSCF4DLSRGTG-ALL	CLASS-1E GTG A,B,C,D FAIL TO RUN DURING FIRST HOUR OF OPERATION (CCF)	1.6E-04	2.3E-02	1.5E+02
10	RSSCF4PMAD001-ALL	RHS-MPP-001A,B,C,D (CS/RHR PUMP) FAIL TO START (CCF)	1.9E-05	2.2E-02	1.2E+03

Table 19.1-47 Common Cause Failure RAW for LRF

Rank	Basic Event ID	Basic Event Description	Basic Event Probability	FV Importance	RAW
1	RTPBTSWCCF	BASIC SOFTWARE CCF	1.0E-07	3.7E-02	3.6E+05
2	EPSCF4CBSO52STL-ALL	EPS 52/STLA,B,C,D (BREAKER) SPURIOUS OPEN (CCF)	1.6E-07	9.4E-03	5.9E+04
3	EPSCF4CBSO52STH-ALL	EPS 52/STHA,B,C,D (BREAKER) SPURIOUS OPEN (CCF)	1.6E-07	9.4E-03	5.9E+04
4	SWSCF4PMYR-FF	EWS-MPP-001A,B,C,D (A,B,C,D-ESW PUMP) FAIL TO RUN (CCF)	1.2E-08	7.0E-04	5.8E+04
5	CWSCF4RHPR-FF	NCS-MHX-001A,B,C,D (A,B,C,D-CCW HX) PLUG / FOUL (CCF)	3.6E-08	1.9E-03	5.3E+04
6	CWSCF4PCYR-FF	NCS-MPP-001A,B,C,D (A,B,C,D-CCW PUMP) FAIL TO RUN (CCF)	6.7E-09	3.6E-04	5.3E+04
7	EPSCF4CBSO52LC-ALL	EPS 52/LCA,B,C,D (BREAKER) SPURIOUS OPEN (CCF)	1.6E-07	7.1E-03	4.5E+04
8	SGNBTHWCCF	DIGITAL I&C HARDWARE CCF	2.1E-06	4.6E-02	2.2E+04
9	SGNBTSWCCF2	GROUP-2 APPLICATION SOFTWARE CCF	1.0E-05	1.7E-01	1.7E+04
10	EPSCF4CBSC52RAT-ALL	EPS 52/RATA,B,C,D (BREAKER) SPURIOUS CLOSE (CCF)	1.6E-07	1.5E-03	9.5E+03

Table 19.1-48 Human Error FV Importance for LRF

Rank	Basic Event ID	Basic Event Description	Basic Event Probability	FV Importance	RAW
1	EPSOO02RDG	(HE) FAIL TO CONNECT THE ALTERNATE AC POWER SOURCE TO CLASS 1E BUS	2.1E-02	2.2E-01	1.1E+01
2	NCCOO02CCW	(HE) FAIL TO OPERATE ALTERNATE C/V COOLING BY C/V FAN	2.0E-02	1.0E-01	6.0E+00
3	ACWOO02FS	(HE) FAIL TO ESTABLISH THE ALTERNATE CCWS BY FIRE PROTECTION WATER SUPPLY SYSTEM	1.1E-02	7.1E-02	7.2E+00
4	ACWOO02CT-DP2	(HE) FAIL TO ESTABLISH THE ALTERNATE CCWS BY NON-ESSENTIAL CHILLED WATER SYSTEM COOLING TOWER	5.1E-01	6.8E-02	1.1E+00
5	MSROO02515A	(HE) FAIL TO CLOSE MSS-SMV-515A	2.6E-03	5.9E-02	2.4E+01
6	RSAOO02FWP	(HE) FAIL TO OPERATE FIRE PROTECTION WATER PUMP	8.5E-03	2.4E-02	3.8E+00
7	HITOO02	(HE) FAIL TO CONTROL HIGH HEAD INJECTION FLOW	2.7E-02	2.1E-02	1.8E+00
8	HITOO02-DP3	(HE) FAIL TO CONTROL HIGH HEAD INJECTION FLOW	1.7E-01	1.7E-02	1.1E+00
9	EFWOO01006AB	(HE) FAIL TO CHANGEOVER EFW PIT	1.7E-02	1.7E-02	2.0E+00
10	PZROO02PORV-DP3	(HE) FAIL TO OPERATE RCS FORCED DEPRESSURIZATION	1.5E-01	1.5E-02	1.1E+00

Table 19.1-49 Human Error RAW for LRF

Rank	Basic Event ID	Basic Event Description	Basic Event Probability	FV Importance	RAW
1	SGNOO04ICVR12	(HE) MISCALIBRATION OF C/V PRESSURE SENSORS A,B,C,D	6.7E-05	3.2E-03	4.9E+01
2	MSROO02515A	(HE) FAIL TO CLOSE MSS-SMV-515A	2.6E-03	5.9E-02	2.4E+01
3	NCCOO04014	(HE) NCC MISCALIBRATION OF CSS-PT-014	8.0E-04	1.3E-02	1.8E+01
4	EPSOO02RDG	(HE) FAIL TO CONNECT THE ALTERNATE AC POWER SOURCE TO CLASS 1E BUS	2.1E-02	2.2E-01	1.1E+01
5	ACWOO02FS	(HE) FAIL TO ESTABLISH THE ALTERNATE CCWS BY FIRE PROTECTION WATER SUPPLY SYSTEM	1.1E-02	7.1E-02	7.2E+00
6	NCCOO04022	(HE) NCC MISCALIBRATION OF NCS-PCA-022	8.0E-04	4.1E-03	6.1E+00
7	NCCOO02CCW	(HE) FAIL TO OPERATE ALTERNATE C/V COOLING BY C/V FAN	2.0E-02	1.0E-01	6.0E+00
8	CHIOO01CHIB	(HE) FAIL TO START THE STANDBY CHARGING INJECTION PUMP B	2.6E-03	7.1E-03	3.8E+00
9	RSAOO02FWP	(HE) FAIL TO OPERATE FIRE PROTECTION WATER PUMP	8.5E-03	2.4E-02	3.8E+00
10	HPIOO02FWBD-S	(HE) FAIL TO OPEN SAFETY DEPRESSURIZATION VALVE	2.6E-03	6.9E-03	3.7E+00

Table 19.1-50 Hardware Single Failure FV Importance for LRF

Rank	Basic Event ID	Basic Event Description	Basic Event Probability	FV Importance	RAW
1	EPSDLLRAACB-L2	B-AAC FAIL TO LOAD AND RUN AFTER FIRST HOUR OF OPERATION	1.8E-02	4.1E-02	3.3E+00
2	EPSDLLRAACA-L2	A-AAC FAIL TO LOAD AND RUN AFTER FIRST HOUR OF OPERATION	1.8E-02	3.7E-02	3.1E+00
3	RTPDASF	DAS FAILURE	1.0E-02	2.6E-02	3.5E+00
4	EFWPTAD001A	EFS-MPP-001A (A-EFW PUMP) FAIL TO START	6.5E-03	1.8E-02	3.7E+00
5	SGNST-EFWPA	A-SG WATER LEVEL HIGH/LOW SIGNAL FAILURE	1.2E-03	1.7E-02	1.5E+01
6	EPSDLLREGTGC	C-CLASS 1E GTG FAIL TO LOAD AND RUN AFTER FIRST HOUR OF OPERATION	1.7E-02	1.4E-02	1.8E+00
7	EPSDLADAACB	B-AAC FAIL TO START	4.7E-03	1.1E-02	3.3E+00
8	EPSDLADAACA	A-AAC FAIL TO START	4.7E-03	1.0E-02	3.1E+00
9	EFWPTAD001D	EFS-MPP-001D (D-EFW PUMP) FAIL TO START	6.5E-03	9.8E-03	2.5E+00
10	EPSDLLREGTGD	D-CLASS 1E GTG FAIL TO LOAD AND RUN AFTER FIRST HOUR OF OPERATION	1.7E-02	9.5E-03	1.6E+00

Table 19.1-51 Hardware Single Failure RAW for LRF

Rank	Basic Event ID	Basic Event Description	Basic Event Probability	FV Importance	RAW
1	RTPCRDF	ROD INJECTION FAILURE (4< RODS)	1.0E-07	2.6E-03	2.6E+04
2	RWSXVEL001	RWS-VLV-001 EXTERNAL LEAK LARGE	7.2E-08	1.2E-04	1.7E+03
3	RWSXVEL024	RWS-VLV-024 EXTERNAL LEAK LARGE	7.2E-08	1.2E-04	1.7E+03
4	RWSCVEL023	RWS-VLV-023 EXTERNAL LEAK LARGE	4.8E-08	7.9E-05	1.7E+03
5	RWSMVEL002	RWS-MOV-002 EXTERNAL LEAK LARGE	2.4E-08	4.0E-05	1.7E+03
6	RWSPNELPIPE1	RWS PIPING BETWEEN RWSP AND RWS-VLV-023 EXTERNAL LEAK LARGE	6.0E-10	9.9E-07	1.7E+03
7	RWSPNELPIPE2	RWS PIPING BETWEEN RWSP AND RWS-VLV-002 EXTERNAL LEAK LARGE	6.0E-10	9.9E-07	1.7E+03
8	RWSTNEL001	RWS-MCP-001 (RWSP) EXTERNAL LEAK LARGE	4.8E-08	7.9E-05	1.6E+03
9	HPIMVEL001D	SIS-MOV-001D EXTERNAL LEAK LARGE	2.4E-08	3.9E-05	1.6E+03
10	HPIMVEL001A	SIS-MOV-001A EXTERNAL LEAK LARGE	2.4E-08	3.9E-05	1.6E+03

Table 19.1-52 Dominant Plant Damage States of LRF

No	PDS	Conditional Containment Failure Probability for each PDS	Frequency (/RY)	Percentage Contribution	Cumulative Percentage
1	4K	1.0E+00	2.0E-08	18.6%	18.6%
2	1D	1.0E+00	1.3E-08	11.9%	30.5%
3	4L	1.0E+00	1.0E-08	9.5%	40.0%
4	3D	1.0E+00	9.7E-08	9.1%	49.1%
5	4D	1.0E+00	9.6E-09	9.0%	58.2%
6	5E	1.1E-01	8.4E-09	7.9%	66.0%
7	3A	1.2E-02	6.4E-09	6.0%	72.1%
8	4H	1.0E+00	5.8E-09	5.4%	77.5%
9	5A	1.7E-02	4.6E-09	4.3%	81.8%
10	1H	1.0E+00	4.2E-09	3.9%	85.7%
11	6H	1.0E+00	3.0E-09	2.8%	88.5%
12	8A	6.7E-01	2.8E-09	2.6%	91.1%
13	2I	1.0E+00	2.8E-09	2.6%	93.7%
14	6D	1.0E+00	2.1E-09	1.9%	95.6%
15	1K	1.0E+00	1.9E-09	1.7%	97.4%
Total LRF			1.1E-07		

Table 19.1-53 Key Sources of Uncertainty and Key Assumptions (Level 2 PRA for Internal Events at Power)

Key Sources of Uncertainty and Key Assumptions		Type (Note)	Summary Results of Qualitative Assessments	Quantitative Approach
Level1/Level2 Interface	Parametric uncertainty of core damage frequency	P	(Parametric uncertainty is considered)	Uncertainty Analysis
	ATWS scenarios are included in low RCS pressure state.	M	ATWS scenarios lead to LLOCA due to primary system overpressurization. If these scenarios lead to SGTR, there is slightly increase LRF because these sequence have a few percent of CDF.	NA
	Reactor vessel rupture scenarios are included in low RCS pressure state.	M	It is assumed that reactor vessel rupture is same as LLOCA.	NA
Containment Event Tree Development	Reactor vessel is assumed to fail regardless of the status of water injection into reactor vessel.	M	It is conservatively assumed no in-vessel retention.	NA
Level 2 event sequence quantification	Parametric uncertainty of the systems in the CSET	P	(Parametric uncertainty is considered)	Uncertainty Analysis
	The mean time to repair for one train of the CCWS is set to 24 hours regardless of cause of failure.	M	Mean maintenance act duration time is 19 hours for the pumps and 21 hours for the Diesels (Ref. 19.1-25). 24 hours is assumed.	NA
	There are no dependencies of Human errors between level 1 PRA event tree and containment system event tree.	M	In the case of core damage accident, procedure has changed and technical support team organized to support operators.	NA
Note - Uncertainty sources are categorized into two types, Parametric (P) or Modeling (M).				

Table 19.1-54 HCLPF Values of Structures and Categories of Components (Sheet 1 of 6)

EQUIPMENT NAME	FAILURE MODE	HCLPF (g:PGA)	basis
Building / Structure			
Reactor Building	Structural Failure	0.69	3
Safety Power Source Buildings	Structural Failure	1.36	3
Containment	Structural Failure	0.63	3
Emergency Feedwater Pits	Structural Failure	0.69	3
Refueling Water Storage Pit	Structural Failure	0.63	3
Interior Containment Structure	Structural Failure	0.66	3
Essential Service Water Intake Structure	Structural Failure	0.50	2
Essential Service Water Pipe Tunnel	Structural Failure	0.50	2
Primary Components			
Fuel Assembly (Reactor Internals and Core Assembly)	Structural Failure	0.50	2
Control Rod Drive	Structural Failure	0.67	1
Reactor Vessel	Structural Failure	0.62	1
Reactor Coolant Pumps	Structural Failure	0.67	1
Pressurizer	Structural Failure	0.67	1
Steam Generator (including Steam Generator Tubes)	Structural Failure	0.67	1
Mechanical Equipment			
Cable Trays	Structural Failure	0.53	1
Accumulators	Structural Failure	0.75	1
CS/RHR Heat Exchangers	Structural Failure	0.58	1
CCW Heat Exchangers	Structural Failure	0.58	1
Component Cooling Water Surge Tanks	Structural Failure	0.58	1
Essential Chilled Water Compression Tanks	Structural Failure	0.58	1
Air Conditioner Ducts	Structural Failure	0.53	1
High Head Injection System Piping	Structural Failure	0.80	1
Accumulator System Piping	Structural Failure	0.80	1
CS/RHR System Piping	Structural Failure	0.80	1
Emergency Feedwater System Piping	Structural Failure	0.80	1
Essential Chilled Water System Piping	Structural Failure	0.80	1

Table 19.1-54 HCLPF Values of Structures and Categories of Components (Sheet 2 of 6)

EQUIPMENT NAME	FAILURE MODE	HCLPF (g:PGA)	basis
Mechanical Equipment (continue)			
Component Cooling Water System Piping	Structural Failure	0.80	1
Essential Service Water System Piping	Structural Failure	0.80	1
RCS Piping	Structural Failure	0.80	1
DVI Piping	Structural Failure	0.80	1
CS/RHR Hot leg Injection Piping	Structural Failure	0.80	1
Main Steam Lines (The upstream side from Main Steam Isolation Valves	Structural Failure	0.80	1
In-Core Instrumentation Tube	Structural Failure	0.80	1
Pressurizer Safety Valve Piping	Structural Failure	0.80	1
Safety Depressurization Valve Piping	Structural Failure	0.80	1
Pressurizer Spray Piping	Structural Failure	0.80	1
Emergency Letdown Piping	Structural Failure	0.80	1
RCS Instrumentation Letdown Piping	Structural Failure	0.80	1
Accumulator Cold leg Injection Piping	Structural Failure	0.80	1
High Head Injection System Hot leg Piping	Structural Failure	0.80	1
Containment Spray Nozzles	Structural Failure	0.80	1
Pumps and Electric motor			
Safety Injection Pumps	Functional Failure	0.62	1
Safety Injection Pumps	Structural Failure	0.62	1
CS/RHR Pumps	Functional Failure	0.62	1
CS/RHR Pumps	Structural Failure	0.62	1
Motor-Driven Emergency Feedwater Pumps	Functional Failure	0.62	1
Component Cooling Water Pumps	Structural/ Functional Failure	0.62	1
ESWPumps	Structural/ Functional Failure	0.62	1
Essential Chilled Water Pumps	Functional Failure	0.62	1
Turbine-Driven Emergency Feedwater Pumps	Functional Failure	0.75	1
Emergency Feedwater Pump Area Air Handling Units	Functional Failure	0.67	1
Essential Chiller Units	Functional Failure	0.50	2
Essential Chiller Units	Structural Failure	0.50	2

Table 19.1-54 HCLPF Values of Structures and Categories of Components (Sheet 3 of 6)

EQUIPMENT NAME	FAILURE MODE	HCLPF (g:PGA)	basis
Motor-Operated Valve			
CS/RHR Heat Exchanger Outlet Valves	Functional Failure	0.80	1
Containment Spray Header Containment Isolation Valves	Functional Failure	0.80	1
EFW Isolation Motor-Operated Flow Control Valves	Functional Failure	0.80	1
T/D EFWP steam supply line Motor-Operated Valves	Functional Failure	0.80	1
CCW Supply / Return Header Isolation Valves (NCS-MOV-007A,B,C,D)	Functional Failure	0.80	1
CCW Supply / Return Header Isolation Valves (NCS-MOV-020A,B,C,D)	Functional Failure	0.80	1
Main Feedwater Isolation Valves	Functional Failure	0.80	1
RWSP Outlet Line Motor-Operated Valve 1	Functional Failure	0.80	1
RWSP Outlet Line Motor-Operated Valve 2	Functional Failure	0.80	1
ESWS Pump Outlet Motor-Operated Valves	Functional Failure	0.80	1
Air-Operated Valve			
Main Steam Isolation Valves	Functional Failure	0.80	1
RWSP Return Line Air-Operated valve	Functional Failure	0.80	1
Electrical Equipment			
Offsite Power System (Ceramic Insulators)	Functional Failure	0.08	1
Class 1E Gas Turbine Generators	Functional Failure	0.50	2
Batteries and Racks	Functional Failure	1.13	1
Class 1E 6.9kV-480V Station Service Transformers	Functional Failure	0.72	1
Class 1E I&C Power Transformers	Functional Failure	0.72	1

Table 19.1-54 HCLPF Values of Structures and Categories of Components (Sheet 4 of 6)

EQUIPMENT NAME	FAILURE MODE	HCLPF (g:PGA)	basis
Electrical Equipment (continue)			
Class 1E 6.9kVSwitchgears	Functional Failure	0.96	1
Class 1E 480V Load Centers (A,B,C,D)	Functional Failure	0.96	1
Class 1E 480V Load Centers (A1,D1)	Functional Failure	0.96	1
Class 1E Motor Control Centers (A,B,C,D)	Functional Failure	0.96	1
Class 1E Motor Control Centers (A1,D1)	Functional Failure	0.96	1
Class 1E Gas Turbine Generator Controlboards	Functional Failure	1.13	1
Gas Turbine Control Cabinets	Functional Failure	1.13	1
Class 1E DC Switchboards (A,B,C,D)	Functional Failure	1.13	1
Class 1E DC Switchboards (A1,D1)	Functional Failure	1.13	1
Solenoid Distribution Panels	Functional Failure	1.13	1
Safety Logic System Cabinets	Functional Failure	1.13	1
Reactor Protection System Cabinets	Functional Failure	1.13	1
ESF Actuation System Cabinets	Functional Failure	1.13	1
Safety Remote I/O Cabinets	Functional Failure	1.13	1
Emergency Feedwater Pump Outlet Flow Control Valves Panels	Functional Failure	1.13	1
Ventilation Chiller Control Cabinets	Functional Failure	1.13	1
Class 1E Battery Chargers	Functional Failure	0.75	1
Class 1E UPS Units	Functional Failure	0.75	1
Class 1E AC120V Panelboards	Functional Failure	0.75	1
Turbine-driven Emergency Feedwater Pump Actuation Cabinets	Functional Failure	1.13	1
Class 1E MOV Inverters	Functional Failure	0.75	1
MOV Inverter Switches	Functional Failure	0.75	1
Class 1E MOV Motor Control Centers	Functional Failure	0.96	1

Table 19.1-54 HCLPF Values of Structures and Categories of Components (Sheet 5 of 6)

EQUIPMENT NAME	FAILURE MODE	HCLPF (g:PGA)	basis
Safety and Check Valves			
Pressurizer Safety Valves	Functional Failure	0.80	1
Safety Injection pump Discharge Check Valves	Functional Failure	0.80	1
RV/HL Injection Line Check Valves	Functional Failure	0.80	1
RV Injection Line Check Valves 1	Functional Failure	0.80	1
RV Injection Line Check Valves 2	Functional Failure	0.80	1
Accumulator Injection Line Check Valves 1	Functional Failure	0.80	1
Accumulator Injection Line Check Valves 2	Functional Failure	0.80	1
CS/RHR Pump Suction Check Valves	Functional Failure	0.80	1
Containment Spray Header Line Check Valves	Functional Failure	0.80	1
EFW Isolation Check Valves	Functional Failure	0.80	1
EFW Pit outlet Check Valves	Functional Failure	0.80	1
EFWP discharge Check Valves	Functional Failure	0.80	1
SG Outlet Check Valves	Functional Failure	0.80	1
CCW Pump outlet Check Valves	Functional Failure	0.80	1
ESWS Pump Outlet Check Valves	Functional Failure	0.80	1
ESWS Supply Line Check Valves	Functional Failure	0.80	1
Main Feedwater Isolation Check Valves	Functional Failure	0.80	1
RWSP Return Line Check Valve	Functional Failure	0.80	1
Essential Chilled Water Pump Discharge Check Valves	Functional Failure	0.80	1
Containment Isolation Equipment			
RCP Seal Water Return Line: C/V Isolation Valves	Functional Failure	0.80	1
RCP Seal Water Return Line C/V Isolation System Piping	Structural Failure	0.80	1
C/V Sump Pump Outlet Pipe Line C/V Isolation System Piping	Structural Failure	0.80	1
Control air Supply Line: C/V Isolation Valve 1	Functional Failure	0.80	1

Table 19.1-54 HCLPF Values of Structures and Categories of Components (Sheet 6 of 6)

EQUIPMENT NAME	FAILURE MODE	HCLPF (g:PGA)	basis
Containment Isolation Equipment (continue)			
Control air Supply Line: C/V Isolation Valve 2	Functional Failure	0.80	1
Instrument Air Pipe C/V Isolation System Piping	Structural Failure	0.80	1
CV Clean up Pipe Line C/V Isolation System Piping	Structural Failure	0.80	1
Containment low volume purge supply Containment Isolation Valve (VCS-AOV-356)	Functional Failure	0.80	1
Containment low volume purge supply Containment Isolation Valve (VCS-AOV-357)	Functional Failure	0.80	1
Penetrations	Structural Failure	0.50	2
Equipment hatches	Structural Failure	0.50	2
Other Equipment			
Spent Fuel Pit Heat Exchangers	Structural Failure	0.58	1
Spent Fuel Pit	Structural Failure	0.69	3
Spent Fuel Pit Pumps	Functional Failure	0.62	1
Spent Fuel Pit Pumps	Structural Failure	0.62	1
Spent Fuel Pit Water Cooling System Piping	Structural Failure	0.80	1

Notes:

1. HCLPF based on EPRI Utility Requirements Document (Reference 19.1-35)

2. HCLPF is assumed as 0.5g.

3. HCLPF based on EPRI TR-103959 methodology (Reference 19.1-36)

Table 19.1-55 HCLPFs for Basic Events (Sheet 1 of 13)

EQUIPMENT NAME	FAILURE MODE	SEISMIC BASIC EVENT ID	MEDIAN PGA (g)	βc	HCLPF (g)	IMPACTS
Building / Structure						
Reactor building	Structural Failure	SE-GTSBDSFBLDGE	1.78	0.42	0.69	SE_GSTC
Safety power source buildings	Structural Failure	SE-GTSBDSFBLDGP	3.35	0.40	1.36	SE_GSTC
Containment	Structural Failure	SE-GTSSRSFCVESS	1.22	0.30	0.63	SE_GSTC
Emergency Feedwater Pits	Structural Failure	SE-EFWTNSF001AB	1.78	0.42	0.69	SE_GSTC
Refueling water storage pit	Structural Failure	SE-RWSTNSFRWSP	1.22	0.30	0.63	SE_GSTC
Interior containment structure	Structural Failure	SE-GTSSRSFCVINT	1.52	0.36	0.66	SE_GSTC
Essential service water intake Structure	Structural Failure	SE-SWSSRSFESWBAS	-	-	0.50	SE_CCW
Essential service water pipe tunnel	Structural Failure	SE-SWSSRSFESWTUN	-	-	0.50	SE_CCW
Primary Components						
Fuel assembly (Reactor internals and core assembly)	Structural Failure	SE-ELOSRSFFUEL	-	-	0.50	SE_ELOCA
Control rod drive	Structural Failure	SE-RTPSRSFCRD	2.2	0.51	0.67	SE-RTA
Reactor vessel	Structural Failure	SE-ELOSRSFRXVES	1.8	0.46	0.62	SE_ELOCA

Table 19.1-55 HCLPFs for Basic Events (Sheet 2 of 13)

EQUIPMENT NAME	FAILURE MODE	SEISMIC BASIC EVENT ID	MEDIAN PGA (g)	βc	HCLPF (g)	IMPACTS
Primary Components (Continued)						
Reactor coolant pumps	Structural Failure	SE-ELOPMSF001ABCD	2.2	0.51	0.67	SE_ELOCA
Pressurizer	Structural Failure	SE-LLOPZSFPZR	2.2	0.51	0.67	SE_LLOCA
Steam generator (including steam generator tubes)	Structural Failure	SE-GTSSGSFSG	2.2	0.51	0.67	SE_GSTC
Mechanical Equipment						
Cable trays	Structural Failure	SE-GTSCASFCABLE	2.2	0.61	0.53	SE_GSTC
Accumulators	Structural Failure	SE-ACCTKSF001ABCD	2.2	0.46	0.75	SE-ACA-LLOCA SE-ACA-SLOCA
CS/RHR Heat Exchangers	Structural Failure	SE-RSSRISF001ABCD	1.7	0.46	0.58	SE_CCW
CCW Heat Exchangers	Structural Failure	SE-CWSRISF001ABCD	1.7	0.46	0.58	SE_CCW
Component Cooling Water Surge Tanks	Structural Failure	SE-CWSTNSF001AB	1.7	0.46	0.58	SE_CCW
Essential Chilled Water Compression Tanks	Structural Failure	SE-HVATNSF001BC	1.7	0.46	0.58	HVA-EFW-A(B)
Air conditioner ducts	Structural Failure	SE-HVAVDSFDUCT	2.2	0.61	0.53	HVA-EFW-A(B)
High head injection system piping	Structural Failure	SE-HPIPNSFINJA	3.3	0.61	0.80	SE-HPI-LL SE-HPI-ML SE-HPI-SL SE-RWS

Table 19.1-55 HCLPFs for Basic Events (Sheet 3 of 13)

EQUIPMENT NAME	FAILURE MODE	SEISMIC BASIC EVENT ID	MEDIAN PGA (g)	βc	HCLPF (g)	IMPACTS
Mechanical Equipment (Continued)						
Accumulator System Piping	Structural Failure	SE-ACCPNSFINJA	3.3	0.61	0.80	SE-ACA-LLOCA SE-ACA-SLOCA
CS/RHR system piping	Structural Failure	SE-RSSPNSFPIPE	3.3	0.61	0.80	SE-RSS-CSS SE-RSS-CSS-HRSE-RWS
Emergency Feedwater System Piping	Structural Failure	SE-EFWPNSFCSTA	3.3	0.61	0.80	SE-EFW-SL SE-EFW-LO1
HVAC chiller system piping	Structural Failure	SE-HVAPNSFCHPIPE	3.3	0.61	0.80	HVA-EFW-A(B)
Component cooling water system piping	Structural Failure	SE-CWSPNSFCCWA	3.3	0.61	0.80	SE_CCW
Essential service water system piping	Structural Failure	SE-SWSPNSFSWPA1	3.3	0.61	0.80	SE_CCW
RCS piping	Structural Failure	SE-ELOPNSFNPIP	3.3	0.61	0.80	SE_ELOCA
DVI piping	Structural Failure	SE-ELOPNSFDV	3.3	0.61	0.80	SE_ELOCA
CS/RHR Hot Leg injection piping	Structural Failure	SE-ELOPNSFCSHL	3.3	0.61	0.80	SE_ELOCA
Main Steam Lines(The upstream side from Main SteamIsolation Valves)	Structural Failure	SE-ELOPNSFMSIV	3.3	0.61	0.80	SE_ELOCA
In-core instrumentation tube	Structural Failure	SE-ELOPNSFINSTR	3.3	0.61	0.80	SE_ELOCA
Pressurizer safety valve piping	Structural Failure	SE-LLOPNSFPZRSV	3.3	0.61	0.80	SE_LLOCA

Table 19.1-55 HCLPFs for Basic Events (Sheet 4 of 13)

EQUIPMENT NAME	FAILURE MODE	SEISMIC BASIC EVENT ID	MEDIAN PGA (g)	βc	HCLPF (g)	IMPACTS
Mechanical Equipment (Continued)						
Safety Depressurization Valve Piping	Structural Failure	SE-LLOPNSFPZRRV	3.3	0.61	0.80	SE_LLOCA
Pressurizer Spray Piping	Structural Failure	SE-LLOPNSFPZRSP	3.3	0.61	0.80	SE_LLOCA
Emergency Letdown Piping	Structural Failure	SE-LLOPNSFELD	3.3	0.61	0.80	SE_LLOCA
RCS Instrumentation Letdown Piping	Structural Failure	SE-SLOPNSFINST	3.3	0.61	0.80	SE_SLOCA
Accumulator Coldleg Injection Piping	Structural Failure	SE-ELOPNSFACCINJ	3.3	0.61	0.80	SE_ELOCA
High Head Injection System Hotleg Piping	Structural Failure	SE-ELOPNSFHPIINJ	3.3	0.61	0.80	SE_ELOCA
Containment Spray Nozzles	Structural Failure	SE-RSSSZSFNOZABCD	3.3	0.61	0.80	SE-RSS-CSS SE-RSS-CSS-HR
Pumps and Electric motor						
Safety Injection Pumps	Functional Failure	SE-HPIPMFF001ABCD	1.8	0.46	0.62	SE-HPI-LL SE-HPI-ML SE-HPI-SL
Safety Injection Pumps	Structural Failure	SE-HPIPMSF001ABCD	1.8	0.46	0.62	SE_CCW
CS/RHR Pumps	Functional Failure	SE-RSSPMFF001ABCD	1.8	0.46	0.62	SE-RSS-CSS SE-RSS-CSS-HR
CS/RHR Pumps	Structural Failure	SE-RSSPMSF001ABCD	1.8	0.46	0.62	SE_CCW

Table 19.1-55 HCLPFs for Basic Events (Sheet 5 of 13)

EQUIPMENT NAME	FAILURE MODE	SEISMIC BASIC EVENT ID	MEDIAN PGA (g)	βc	HCLPF (g)	IMPACTS
Pumps and Electric motor (Continued)						
Motor Driven Emergency Feedwater Pumps	Functional Failure	SE-EFWPMFF001BC	1.8	0.46	0.62	SE-EFW-SL SE-EFW-LO1
Component Cooling Water Pumps	Structural/ Functional Failure	SE-CWSPMFF001ABCD	1.8	0.46	0.62	SE_CCW
ESW Pumps	Structural/ Functional Failure	SE-SWSPMFF001ABCD	1.8	0.46	0.62	SE_CCW
Essential Chilled Water Pumps	Functional Failure	SE-HVAPMFF001BC	1.8	0.46	0.62	HVA-EFW-A(B)
Turbine Driven Emergency Feedwater Pumps	Functional Failure	SE-EFWPTFF001AD	2.2	0.46	0.75	SE-EFW-SL SE-EFW-LO1
Emergency Feedwater Pump Area Air Handling Units	Functional Failure	SE-HVAAHFF401BC	2.2	0.51	0.67	HVA-EFW-A(B)
Essential Chiller Units	Functional Failure	SE-HVACHFF001BC	-	-	0.50	HVA-EFW-A(B)
Essential Chiller Units	Structural Failure	SE-HVACHSF001BC	-	-	0.50	SE_CCW
Motor-Operated Valve						
CS/RHR Heat Exchanger Outlet Valves	Functional Failure	SE-RSSMVFF145ABCD	3.3	0.61	0.80	SE-RSS-CSS-HR

Table 19.1-55 HCLPFs for Basic Events (Sheet 6 of 13)

EQUIPMENT NAME	FAILURE MODE	SEISMIC BASIC EVENT ID	MEDIAN PGA (g)	βc	HCLPF (g)	IMPACTS
Motor-Operated Valve (Continued)						
Containment Spray Header Containment Isolation Valves	Functional Failure	SE-RSSMVFF004ABCD	3.3	0.61	0.80	SE-RSS-CSS SE-RSS-CSS-HR
EFW Isolation Motor-Operated Flow Control Valves	Functional Failure	SE-EFWMVFF017ABCD	3.3	0.61	0.80	SE-EFW-SL SE-EFW-LO1
T/D EFWP steam supply line Motor-Operated Valves	Functional Failure	SE-EFWMVFF103AD	3.3	0.61	0.80	SE-EFW-SL SE-EFW-LO1
CCW Supply / Return Header Isolation Valves (NCS-MOV-007A,B,C,D)	Functional Failure	SE-CWSMVFF007ABCD	3.3	0.61	0.80	SE_CCW
CCW Supply / Return Header Isolation Valves (NCS-MOV-020A,B,C,D)	Functional Failure	SE-CWSMVFF020ABCD	3.3	0.61	0.80	SE_CCW
Main Feedwater Isolation Valves	Functional Failure	SE-MFWMVFF512ABCD	3.3	0.61	0.80	SE_ELOCA
RWSP Outlet Line Motor-Operated Valve 1	Functional Failure	SE-RWSMVFF002	3.3	0.61	0.80	SE-RWS
RWSP Outlet Line Motor-Operated Valve 2	Functional Failure	SE-RWSMVFF004	3.3	0.61	0.80	SE-RWS
ESWS Pump Outlet Motor-Operated Valves	Functional Failure	SE-SWSPMFF503ABCD	3.3	0.61	0.80	SE_CCW

Table 19.1-55 HCLPFs for Basic Events (Sheet 7 of 13)

EQUIPMENT NAME	FAILURE MODE	SEISMIC BASIC EVENT ID	MEDIAN PGA (g)	βc	HCLPF (g)	IMPACTS
Air-Operated Valve						
Main Steam Isolation Valves	Functional Failure	SE-MSRAVFF515ABCD	3.3	0.61	0.80	SE_ELOCA
RWSP Return Line Air-Operated valve	Functional Failure	SE-RWSAVFF022	3.3	0.61	0.80	SE-RWS
Electrical Equipment						
Offsite Power System (Ceramic Insulators)	Functional Failure	SE-OPSTRFFRESERVE	0.30	0.55	0.08	SE_LOOP
Class 1E Gas Turbine Generators	Functional Failure	SE-EPSDLFFGTABCD	-	-	0.50	SE-OPS EPS-69KA(B)(C)(D)
Batteries and Racks	Functional Failure	SE-EPSBYFFBYABCD	3.3	0.46	1.13	SE-OPS EPS-69KA(B)(C)(D) EPS-SBA(B)(C)(D)
Class 1E 6.9kV-480V Station Service Transformers	Functional Failure	SE-EPSTRFF001ABCD	2.1	0.46	0.72	EPS-480A(B)(C)(D)
Class 1E I&C Power Transformers	Functional Failure	SE-EPSEPFF002ABCD	2.1	0.46	0.72	EPS-VITALA(B)(C)(D)
Class 1E 6.9kV Switchgears	Functional Failure	SE-EPSEPFFMCABCD	2.8	0.46	0.96	SE-OPS EPS-69KA(B)(C)(D)
Class 1E 480V Load Centers (A,B,C,D)	Functional Failure	SE-EPSEPFFPCABCD	2.8	0.46	0.96	EPS-480A(B)(C)(D)
Class 1E 480V Load Centers (A1,D1)	Functional Failure	SE-EPSEPFFPCA1D1	2.8	0.46	0.96	EPS-48A1(D1)

Table 19.1-55 HCLPFs for Basic Events (Sheet 8 of 13)

EQUIPMENT NAME	FAILURE MODE	SEISMIC BASIC EVENT ID	MEDIAN PGA (g)	βc	HCLPF (g)	IMPACTS
Electrical Equipment (Continued)						
Class 1E Motor Control Centers (A,B,C,D)	Functional Failure	SE-EPSEPFFMCCABCD	2.8	0.46	0.96	EPS-MCA(B)(C)(D)
Class 1E Motor Control Centers (A1,D1)	Functional Failure	SE-EPSEPFFMCCA1D1	2.8	0.46	0.96	EPS-MCA1(D1)
Class 1E Gas Turbine Generator Controlboards	Functional Failure	SE-EPSEPFFEGBABCD	3.3	0.46	1.13	SE-OPS EPS-69KA(B)(C)(D)
Gas Turbine Control Cabinets	Functional Failure	SE-EPSEPFFEPBABCD	3.3	0.46	1.13	SE-OPS EPS-69KA(B)(C)(D)
Class 1E DC Switchboards (A,B,C,D)	Functional Failure	SE-EPSEPFFDCCABCD	3.3	0.46	1.13	SE-OPS EPS-69KA(B)(C)(D) EPS-SBA(B)(C)(D)
Class 1E DC Switchboards (A1,D1)	Functional Failure	SE-EPSEPFFDCCA1D1	3.3	0.46	1.13	EPS-SBA1(D1)
Solenoid Distribution Panels	Functional Failure	SE-EPSEPFFSDCABCD	3.3	0.46	1.13	SE_GSTC
Safety Logic System Cabinets	Functional Failure	SE-SGNEPFFSLCABCD	3.3	0.46	1.13	SE_GSTC
Reactor Protection System Cabinets	Functional Failure	SE-SGNEPFFRPSABCD	3.3	0.46	1.13	SE_GSTC
ESF Actuation System Cabinets	Functional Failure	SE-SGNEPFFEFCABCD	3.3	0.46	1.13	SE_GSTC
Safety Remote I/O Cabinets	Functional Failure	SE-SGNEPFFRIOABCD	3.3	0.46	1.13	SE_GSTC

Table 19.1-55 HCLPFs for Basic Events (Sheet 9 of 13)

EQUIPMENT NAME	FAILURE MODE	SEISMIC BASIC EVENT ID	MEDIAN PGA (g)	βc	HCLPF (g)	IMPACTS
Electrical Equipment (Continued)						
Ventilation Chiller Control Cabinets	Functional Failure	SE-SGNEPFFVCPABCD	3.3	0.46	1.1	HVA-EFW-A(B)
Class 1E Battery Chargers	Functional Failure	SE-EPSEPFFBCPABCD	2.2	0.46	0.75	SE-OPS EPS-69KA(B)(C)(D) EPS-SBA(B)(C)(D)
Class 1E UPS Units	Functional Failure	SE-EPSIVFFIBCABCD	2.2	0.46	0.75	SE-OPS EPS-69KA(B)(C)(D) EPS-VITALA(B)(C)(D)
Class 1E AC120V Panelboards	Functional Failure	SE-EPSEPFFIBDABCD	2.2	0.46	0.75	SE-OPS EPS-69KA(B)(C)(D) EPS-VITALA(B)(C)(D)
Turbine-driven Emergency Feedwater Pump Actuation Cabinets	Functional Failure	SE-SGNEPFFTDFAD	3.3	0.46	1.13	SE-EFW-SL SE-EFW-LO1
Emergency Feedwater Pump Outlet Flow Control Valves Panels	Functional Failure	SE-SGNEPFFAFWABCD	3.3	0.46	1.13	SE-EFW-SL SE-EFW-LO1
Class 1E MOV Inverters	Functional Failure	SE-EPSIVFFMVIABCD	2.2	0.46	0.75	EPS-MVMC1A(B)(C)(1D)
MOV Inverter Switches	Functional Failure	SE-EPSATFFSABCD	2.2	0.46	0.75	EPS-MVMC1A(B)(C)(1D)
Class 1E MOV Motor Control Centers	Functional Failure	SE-EPSEPFFMOVMCCABCD	2.8	0.46	0.96	EPS-MVMC1A(B)(C)(1D)

Table 19.1-55 HCLPFs for Basic Events (Sheet 10 of 13)

EQUIPMENT NAME	FAILURE MODE	SEISMIC BASIC EVENT ID	MEDIAN PGA (g)	βc	HCLPF (g)	IMPACTS
Safety and Check Valves						
Pressurizer Safety Valves	Functional Failure	SE-PZRSVFF120-123	3.3	0.61	0.80	SE_LLOCA
Safety Injection pump Discharge Check Valves	Functional Failure	SE-HPICVFF004ABCD	3.3	0.61	0.80	SE-HPI-LLSE-HPI-ML SE-HPI-SL
RV/HL Injection Line Check Valves	Functional Failure	SE-HPICVFF010ABCD	3.3	0.61	0.80	SE-HPI-LL SE-HPI-ML SE-HPI-SL
RV Injection Line Check Valves 1	Functional Failure	SE-HPICVFF012ABCD	3.3	0.61	0.80	SE-HPI-LL SE-HPI-ML SE-HPI-SL
RV Injection Line Check Valves 2	Functional Failure	SE-HPICVFF013ABCD	3.3	0.61	0.80	SE-HPI-LL SE-HPI-ML SE-HPI-SL
Accumulator Injection Line Check Valves 1	Functional Failure	SE-ACCCVFF102ABCD	3.3	0.61	0.80	SE-ACA-LLOCA SE-ACA-SLOCA
Accumulator Injection Line Check Valves 2	Functional Failure	SE-ACCCVFF103ABCD	3.3	0.61	0.80	SE-ACA-LLOCA SE-ACA-SLOCA
CS/RHR Pump Suction Check Valves	Functional Failure	SE-RSSCVFF004ABCD	3.3	0.61	0.80	SE-RSS-CSS SE-RSS-CSS-HR

Table 19.1-55 HCLPFs for Basic Events (Sheet 11 of 13)

EQUIPMENT NAME	FAILURE MODE	SEISMIC BASIC EVENT ID	MEDIAN PGA (g)	βc	HCLPF (g)	IMPACTS
Safety and Check Valves (Continued)						
Containment Spray Header Line Check Valves	Functional Failure	SE-RSSCVFF005ABCD	3.3	0.61	0.80	SE-RSS-CSS SE-RSS-CSS-HR
EFW Isolation Check Valves	Functional Failure	SE-EFWCVFF018ABCD	3.3	0.61	0.80	SE-EFW-SL SE-EFW-LO1
EFW Pit outlet Check Valves	Functional Failure	SE-EFWCVFF008AB	3.3	0.61	0.80	SE-EFW-SL SE-EFW-LO1
ESW discharge Check Valves	Functional Failure	SE-EFWCVFF012ABCD	3.3	0.61	0.80	SE-EFW-SL SE-EFW-LO1
SG Outlet Check Valves	Functional Failure	SE-EFWCVFF102ABCD	3.3	0.61	0.80	SE-EFW-SL SE-EFW-LO1
CCW Pump outlet Check Valves	Functional Failure	SE-CWSCVFF016ABCD	3.3	0.61	0.80	SE_CCW
ESWS Pump Outlet Check Valves	Functional Failure	SE-SWSCVFF502ABCD	3.3	0.61	0.80	SE_CCW
ESWS Supply Line Check Valves	Functional Failure	SE-SWSCVFF602ABCD	3.3	0.61	0.80	SE_CCW
Main Feedwater Isolation Check Valves	Functional Failure	SE-MFWCVFF511ABCD	3.3	0.61	0.80	SE_ELOCA
RWSP Return Line Check Valve	Functional Failure	SE-RWSCVFF023	3.3	0.61	0.80	SE-RWS
Essential Chilled Water Pump Discharge Check Valves	Functional Failure	SE-HVACVFF005BC	3.3	0.61	0.80	HVA-EFW-A(B)

Table 19.1-55 HCLPFs for Basic Events (Sheet 12 of 13)

EQUIPMENT NAME	FAILURE MODE	SEISMIC BASIC EVENT ID	MEDIAN PGA (g)	βc	HCLPF (g)	IMPACTS
Containment Isolation Equipment						
RCP Seal Water Return Line: C/V Isolation Valves	Functional Failure	SE-CVIMVFF203	3.3	0.61	0.80	C/V ISOLATION
RCP Seal Water Return Line C/V Isolation System Piping	Structural Failure	SE-CVIPNSFSEALPIPE	3.3	0.61	0.80	C/V ISOLATION
C/V Sump Pump Outlet Pipe Line C/V Isolation System Piping	Structural Failure	SE-CVIPNSFSUMPPIPE	3.3	0.61	0.80	C/V ISOLATION
Control air Supply Line : C/V Isolation Valve 1	Functional Failure	SE-CVIMVFF002	3.3	0.61	0.80	C/V ISOLATION
Control air Supply Line : C/V Isolation Valve 2	Functional Failure	SE-CVICVFF003	3.3	0.61	0.80	C/V ISOLATION
Instrument Air Pipe C/V Isolation System Piping	Structural Failure	SE-CVIPNSFIAPIPE	3.3	0.61	0.80	C/V ISOLATION
C/V Clean up Pipe Line C/V Isolation System Piping	Structural Failure	SE-CVIPNSFCVCLPIPE	3.3	0.61	0.80	C/V ISOLATION
Containment low volume purge supply Containment Isolation Valve	Functional Failure	SE-CVIAVFF356	3.3	0.61	0.80	C/V ISOLATION
Containment low volume purge supply Containment Isolation Valve	Functional Failure	SE-CVIAVFF357	3.3	0.61	0.80	C/V ISOLATION
Penetrations	Structural Failure	SE-CVIPESFPENE	-	-	0.50	C/V ISOLATION
Equipment hatches	Structural Failure	SE-CVIHCSFHATCH	-	-	0.50	C/V ISOLATION

Table 19.1-55 HCLPFs for Basic Events (Sheet 13 of 13)

EQUIPMENT NAME	FAILURE MODE	SEISMIC BASIC EVENT ID	MEDIAN PGA (g)	βc	HCLPF (g)	IMPACTS
Other Equipment						
Spent Fuel Pit Heat Exchangers	Structural Failure	SE-SFPRISFSFPHXAB	1.7	0.46	0.58	LPSD
Spent Fuel Pit	Structural Failure	SE-SFPTNSFSFPIT	-	-	1.5	LPSD
Spent Fuel Pit Pumps	Structural Failure	SE-SFPPMSFSFP1AB	1.8	0.46	0.62	LPSD
Spent Fuel Pit Pumps	Functional Failure	SE-SFPPMFFSFP1AB	1.8	0.46	0.62	LPSD
Spent Fuel Pit Water Cooling System Piping	Structural Failure	SE-SFPPNSFSFPPIPE	3.3	0.61	0.80	LPSD

Table 19.1-56 HCLPFs for Sequences and the Plant HCLPF

SEQUENCE ID	SEQUENCE CODE	INITIATING EVENT HCLPF (g)	SEQUENCE HCLPF (INITIATING EVENT IS NOT INCLUDED) (g)	SEQUENCE HCLPF (g)
SE_GTC-0001		0.53	NA	0.53
SE_ELOCA-0001		0.50	NA	0.50
SE_CCWS-0001		0.50	NA	0.50
SE_LLOCA-0002	SE_CXC	0.67	0.75	0.75
SE_LLOCA-0003	SE_CSA	0.67	0.62	0.67
SE_LLOCA-0004	SE_ACA	0.67	0.75	0.75
SE_LLOCA-0005	SE_ACA-SE_CXC	0.67	0.75	0.75
SE_LLOCA-0006	SE_ACA-SE_CSA	0.67	0.75	0.75
SE_LLOCA-0007	SE_HIA	0.67	0.62	0.67
SE_LLOCA-0008	SE_HIA-SE_CXC	0.67	0.75	0.75
SE_LLOCA-0009	SE_HIA-SE_CSA	0.67	0.50	0.67
SE_LLOCA-0010	SE_HIA-SE_ACA	0.67	0.75	0.75
SE_LLOCA-0011	SE_HIA-SE_ACA-SE_CXC	0.67	0.75	0.75
SE_LLOCA-0012	SE_HIA-SE_ACA-SE_CSA	0.67	0.75	0.75
SE_SLOCA-0002	SE_CXB	0.80	0.80	0.80
SE_SLOCA-0003	SE_CSA	0.80	0.62	0.80
SE_SLOCA-0004	SE_HIB	0.80	0.62	0.80
SE_SLOCA-0005	SE_HIB-SE_CXB	0.80	0.80	0.80
SE_SLOCA-0006	SE_HIB-SE_CSA	0.80	0.50	0.80
SE_SLOCA-0007	SE_HIB-SE_ACC	0.80	0.75	0.80
SE_SLOCA-0008	SE_HIB-SE_ACC-SE_CXB	0.80	0.80	0.80
SE_SLOCA-0009	SE_HIB-SE_ACC-SE_CSA	0.80	0.75	0.80
SE_SLOCA-0010	SE_EFA	0.80	0.75	0.80
SE_SLOCA-0011	SE_EFA-SE_CXB	0.80	0.75	0.80
SE_SLOCA-0012	SE_EFA-SE_CSA	0.80	0.75	0.80
SE_SLOCA-0013	SE_EFA-SE_HIB	0.80	0.75	0.80
SE_SLOCA-0014	SE_EFA-SE_HIB-SE_CXB	0.80	0.75	0.80
SE_SLOCA-0015	SE_EFA-SE_HIB-SE_CSA	0.80	0.75	0.80
SE_SLOCA-0016	SE_RTA	0.80	0.67	0.80
SE_LOOP-0014	SE_EFO	0.08	0.75	0.75
SE_LOOP-0015	SE_EFO-SE_CXB3	0.08	0.75	0.75
SE_LOOP-0016	SE_EFO-SE_CSA	0.08	0.75	0.75
SE_LOOP-0027	SE_OPS-SEL	0.08	0.50	0.50
SE_LOOP-0029	SE_RTA	0.08	0.67	0.67
			Plant HCLPF =	**0.50g**

Table 19.1-57 Initiating Events Included/Excluded in the Internal Fire PRA

	Event description	Considered in Fire PRA MODEL
1	Large Pipe Break Loss-of-Coolant Accident	No, fires will not induce a pipe break.
2	Medium Pipe Break Loss-of-Coolant Accident	No, a fire cannot induce simultaneous spurious opening of two emergency letdown valves.
3	Small Pipe Break Loss-of-Coolant Accident	Yes, a small Pipe Break LOCA may occur in the event a fire induces spurious opening of safety depressurization valve.
4	Very Small Pipe Break Loss-of-Coolant Accident	No, a fire cannot induce simultaneous spurious opening of two reactor vessel top vent line valves.
5	Reactor Vessel Rupture	No, a fire can not induce vessel rupture.
6	Steam Generator Tube Rupture	No, a fire can not induce SG tube rupture.
7	Main Steam Line Break (Downstream MSIV: Turbine side)	Yes, may occur if the fire can induce spurious opening of secondary side power operated valve.
8	Main Steam Line Break (Upstream MSIV: CV side)	Yes, a MSLB may occur due to fire induced spurious opening of a main steam power operated relief valve.
9	Feed Water Line Break	No, a fire can not induce a pipe break.
10	General Transient	Yes
11	Loss of Main Feed Water	Yes
12	Total Loss of Component Cooling Water	No, fire cannot affect all four trains because of physical separation among the four trains.
13	Partial Loss of Component Cooling Water	Yes
14	Loss of Offsite Power	Yes
15	Loss of Vital AC Bus	No, LOAC is included in TRANS.
16	Loss of Vital DC Bus	No, LODC is included in TRANS.
17	ATWS	No, no fire induced scenarios could be identified leading to ATWS condition.

Table 19.1-58 Fire Compartment Evaluation

Fire Compartment	Description	Fire Frequency [1/RY]	CDF [1/RY]	Remarks
YARD	Switchyard (FA7-301 to FA7-309)	6.0E-03	2.6E-07	
FA6-101-01	Turbine Building B1F Floor	5.6E-02	2.0E-07	
FA6-101-04	FA6-101-04 Zone	1.4E-03	6.0E-08	
FA2-202	A-Class 1E Electrical Room	2.2E-03	4.3E-08	
FA2-205	D-Class 1E Electrical Room	2.2E-03	2.8E-08	
FA1-101-17	C/V 3F Northwestern Part Floor Zone	7.5E-04	2.3E-08	
FA2-304	A-Class 1E I&C Room	1.2E-03	1.5E-08	
FA1-101-24	C/V 4F Southwestern Part Floor Zone	3.4E-04	1.1E-08	
FA2-302	A-Class 1E UPS Room	6.9E-04	9.8E-09	
FA2-309	D-Class 1E I&C Room	1.2E-03	8.4E-09	
FA3-109	C-Class 1E GTG Room	4.7E-03	7.7E-09	
FA3-103	B-Class 1E GTG Room	4.7E-03	6.6E-09	

Table 19.1-59 Screened Multiple Compartment Scenarios

Fire Scenario No.	Fire exposing Area	Fire exposed Area	CDF (/RY)
FA2-205-M04	FA2-205	FA2-206	2.8E-08
FA2-202-M04	FA2-202	FA2-201	2.7E-08
FA2-202-M11	FA2-202	FA2-307	2.1E-08
FA2-205-M11	FA2-205	FA2-312	2.1E-08
FA6-101-01-M02	FA6-101-01	FA6-101-04	1.8E-08
FA2-202-M10	FA2-202	FA6-101-04	1.6E-08
FA2-205-M10	FA2-205	FA6-101-04	1.5E-08
FA6-101-04-M04	FA6-101-04	FA2-202	9.9E-09
FA6-101-04-M07	FA6-101-04	FA2-205	9.5E-09
FA2-307-M09	FA2-307	FA2-202	9.4E-09
FA2-312-M08	FA2-312	FA2-205	9.4E-09

Table 19.1-60 Cutsets for Dominant Scenarios (YARD) (Sheet 1 of 14)

No.	Cut Set Freq. (/RY)	Percent (%)	Cutsets	Basic Event Name
1	1.3E-07	48.6	YARD_B27	IGNITION SOURCE - TRANSFORMER . CATASTROPHIC
			EPSCF4DLLRGTG-ALL	CLASS-1E GTG A,B,C,D FAIL TO RUN AFTER FIRST HOUR OF OPERATION (CCF)
			EPSOO02RDG	(HE) FAIL TO CONNECT THE ALTERNATE AC POWER SOURCE TO CLASS 1E BUS
			RCP----SEAL	RCP SEAL LOCA
			YARD	INITIATING EVENT OCCURRENCE PROBABILITY (LOOP)
2	2.7E-08	10.3	YARD_B27	IGNITION SOURCE - TRANSFORMER . CATASTROPHIC
			EPSCF4DLADGTG-ALL	CLASS-1E GTG A,B,C,D FAIL TO START (CCF)
			EPSOO02RDG	(HE) FAIL TO CONNECT THE ALTERNATE AC POWER SOURCE TO CLASS 1E BUS
			RCP----SEAL	RCP SEAL LOCA
			YARD	INITIATING EVENT OCCURRENCE PROBABILITY (LOOP)
3	2.0E-08	7.7	YARD_B27	IGNITION SOURCE - TRANSFORMER . CATASTROPHIC
			EPSCF4DLSRGTG-ALL	CLASS-1E GTG A,B,C,D FAIL TO RUN DURING FIRST HOUR OF OPERATION (CCF)
			EPSOO02RDG	(HE) FAIL TO CONNECT THE ALTERNATE AC POWER SOURCE TO CLASS 1E BUS
			RCP----SEAL	RCP SEAL LOCA
			YARD	INITIATING EVENT OCCURRENCE PROBABILITY (LOOP)
4	8.7E-09	3.4	YARD_B27	IGNITION SOURCE - TRANSFORMER . CATASTROPHIC
			EPSCF2DLLRAAC-ALL	AAC A,B FAIL TO RUN AFTER FIRST HOUR OF OPERATION (CCF)
			EPSCF4DLLRGTG-ALL	CLASS-1E GTG A,B,C,D FAIL TO RUN AFTER FIRST HOUR OF OPERATION (CCF)
			RCP----SEAL	RCP SEAL LOCA
			YARD	INITIATING EVENT OCCURRENCE PROBABILITY (LOOP)
5	4.7E-09	1.8	YARD_B27	IGNITION SOURCE - TRANSFORMER . CATASTROPHIC
			EPSCF4SEFFGTG-ALL	CLASS-1E GTG A,B,C,D SEQUENCER FAIL TO OPERATE (CCF)
			EPSOO02RDG	(HE) FAIL TO CONNECT THE ALTERNATE AC POWER SOURCE TO CLASS 1E BUS
			RCP----SEAL	RCP SEAL LOCA
			YARD	INITIATING EVENT OCCURRENCE PROBABILITY (LOOP)

Table 19.1-60 Cutsets for Dominant Scenarios (YARD) (Sheet 2 of 14)

No.	Cut Set Freq. (/RY)	Percent (%)	Cutsets	Basic Event Name
6	2.5E-09	0.99	YARD_B27	IGNITION SOURCE - TRANSFORMER . CATASTROPHIC
			EPSCF4CBFC52EPS-ALL	EPS 52/EPSA,B,C,D (BREAKER) FAIL TO CLOSE (CCF)
			EPSOO02RDG	(HE) FAIL TO CONNECT THE ALTERNATE AC POWER SOURCE TO CLASS 1E BUS
			RCP----SEAL	RCP SEAL LOCA
			YARD	INITIATING EVENT OCCURRENCE PROBABILITY (LOOP)
7	2.0E-09	0.76	YARD_B27	IGNITION SOURCE - TRANSFORMER . CATASTROPHIC
			EPSCBFO52UAT-ALL	EPS 52/UATA,B,C,D (BREAKER) FAIL TO OPEN (CCF)
			EPSOO01UATRAT	(HE) FAIL TO SEPARATE 52/UATA,D,52/RATA,D (BREAKER) AT LOCAL
			RCP----SEAL	RCP SEAL LOCA
			YARD	INITIATING EVENT OCCURRENCE PROBABILITY (LOOP)
8	2.0E-09	0.76	YARD_B27	IGNITION SOURCE - TRANSFORMER . CATASTROPHIC
			EPSCBFO52RAT-ALL	EPS 52/RATA,B,C,D (BREAKER) FAIL TO OPEN (CCF)
			EPSOO01UATRAT	(HE) FAIL TO SEPARATE 52/UATA,D,52/RATA,D (BREAKER) AT LOCAL
			RCP----SEAL	RCP SEAL LOCA
			YARD	INITIATING EVENT OCCURRENCE PROBABILITY (LOOP)
9	1.9E-09	0.73	YARD_B27	IGNITION SOURCE - TRANSFORMER . CATASTROPHIC
			EPSCF2DLLRAAC-ALL	AAC A,B FAIL TO RUN AFTER FIRST HOUR OF OPERATION (CCF)
			EPSCF4DLADGTG-ALL	CLASS-1E GTG A,B,C,D FAIL TO START (CCF)
			RCP----SEAL	RCP SEAL LOCA
			YARD	INITIATING EVENT OCCURRENCE PROBABILITY (LOOP)
10	1.8E-09	0.71	YARD_B27	IGNITION SOURCE - TRANSFORMER . CATASTROPHIC
			EPSCF4DLLRGTG-ALL	CLASS-1E GTG A,B,C,D FAIL TO RUN AFTER FIRST HOUR OF OPERATION (CCF)
			EPSDLLRAACA-L2	A-AAC FAIL TO LOAD AND RUN AFTER FIRST HOUR OF OPERATION
			EPSDLLRAACB-L2	B-AAC FAIL TO LOAD AND RUN AFTER FIRST HOUR OF OPERATION
			RCP----SEAL	RCP SEAL LOCA
			YARD	INITIATING EVENT OCCURRENCE PROBABILITY (LOOP)

Table 19.1-60 Cutsets for Dominant Scenarios (FA6-101-01) (Sheet 3 of 14)

No.	Cut Set Freq. (/RY)	Percent (%)	Cutsets	Basic Event Name
1	7.5E-09	3.8	FA6-101-01_B32	IGNITION SOURCE - MAIN FEEDWATER PUMPS
			FA6-101-01_10	INITIATING EVENT OCCURRENCE PROBABILITY (SLBO)
			HPIOO01SDVDAS	(HE) FAIL TO OPEN SAFETY DEPRESSURIZATION VALVE BY DAS
			SGNBTSWCCF2	GROUP-2 APPLICATION SOFTWARE CCF
2	7.5E-09	3.8	FA6-101-01_B32	IGNITION SOURCE - MAIN FEEDWATER PUMPS
			FA6-101-01_10	INITIATING EVENT OCCURRENCE PROBABILITY (SLBO)
			SGNBTSWCCF2	GROUP-2 APPLICATION SOFTWARE CCF
			SGNOO01S	(HE) FAIL TO START SAFETY INJECTION PUMP BY DAS
3	5.9E-09	3.0	FA6-101-01_B32	IGNITION SOURCE - MAIN FEEDWATER PUMPS
			FA6-101-01_10	INITIATING EVENT OCCURRENCE PROBABILITY (SLBO)
			HPIOO02FWBD-S	(HE) FAIL TO OPEN SAFETY DEPRESSURIZATION VALVE
			MSRCF4AVCD515-ALL	MSS-SMV-515A,B,C,D FAIL TO CLOSE (CCF)
4	5.5E-09	2.8	FA6-101-01_B35	IGNITION SOURCE - T/G OIL
			FA6-101-01_10	INITIATING EVENT OCCURRENCE PROBABILITY (SLBO)
			SGNBTSWCCF2	GROUP-2 APPLICATION SOFTWARE CCF
			SGNOO01S	(HE) FAIL TO START SAFETY INJECTION PUMP BY DAS
5	5.5E-09	2.8	FA6-101-01_B35	IGNITION SOURCE - T/G OIL
			FA6-101-01_10	INITIATING EVENT OCCURRENCE PROBABILITY (SLBO)
			HPIOO01SDVDAS	(HE) FAIL TO OPEN SAFETY DEPRESSURIZATION VALVE BY DAS
			SGNBTSWCCF2	GROUP-2 APPLICATION SOFTWARE CCF
6	4.3E-09	2.2	FA6-101-01_B35	IGNITION SOURCE - T/G OIL
			FA6-101-01_10	INITIATING EVENT OCCURRENCE PROBABILITY (SLBO)
			HPIOO02FWBD-S	(HE) FAIL TO OPEN SAFETY DEPRESSURIZATION VALVE
			MSRCF4AVCD515-ALL	MSS-SMV-515A,B,C,D FAIL TO CLOSE (CCF)

Table 19.1-60 Cutsets for Dominant Scenarios (FA6-101-01) (Sheet 4 of 14)

No.	Cut Set Freq. (/RY)	Percent (%)	Cutsets	Basic Event Name
7	4.3E-09	2.2	FA6-101-01_B36	IGNITION SOURCE - TRANSIENT FIRES CAUSED BY WELDING AND CUTTING
			FA6-101-01_10	INITIATING EVENT OCCURRENCE PROBABILITY (SLBO)
			HPIOO01SDVDAS	(HE) FAIL TO OPEN SAFETY DEPRESSURIZATION VALVE BY DAS
			SGNBTSWCCF2	GROUP-2 APPLICATION SOFTWARE CCF
8	4.3E-09	2.2	FA6-101-01_B36	IGNITION SOURCE - TRANSIENT FIRES CAUSED BY WELDING AND CUTTING
			FA6-101-01_10	INITIATING EVENT OCCURRENCE PROBABILITY (SLBO)
			SGNBTSWCCF2	GROUP-2 APPLICATION SOFTWARE CCF
			SGNOO01S	(HE) FAIL TO START SAFETY INJECTION PUMP BY DAS
9	4.1E-09	2.1	FA6-101-01_B37	IGNITION SOURCE - TRANSIENTS
			FA6-101-01_10	INITIATING EVENT OCCURRENCE PROBABILITY (SLBO)
			SGNBTSWCCF2	GROUP-2 APPLICATION SOFTWARE CCF
			SGNOO01S	(HE) FAIL TO START SAFETY INJECTION PUMP BY DAS
10	4.1E-09	2.1	FA6-101-01_B37	IGNITION SOURCE - TRANSIENTS
			FA6-101-01_10	INITIATING EVENT OCCURRENCE PROBABILITY (SLBO)
			HPIOO01SDVDAS	(HE) FAIL TO OPEN SAFETY DEPRESSURIZATION VALVE BY DAS
			SGNBTSWCCF2	GROUP-2 APPLICATION SOFTWARE CCF

Table 19.1-60 Cutsets for Dominant Scenarios (FA6-101-04) (Sheet 5 of 14)

No.	Cut Set Freq. (/RY)	Percent (%)	Cutsets	Basic Event Name
1	1.5E-08	24.6	FA6-101-04_B36	FIRE IGNITION FREQUENCY OF FA6-101-04 BY BIN 36
			EPSCF4DLLRGTG-ALL	CLASS-1E GTG A,B,C,D FAIL TO RUN AFTER FIRST HOUR OF OPERATION (CCF)
			EPSOO02RDG	(HE) FAIL TO CONNECT THE ALTERNATE AC POWER SOURCE TO CLASS 1E BUS
			FA6-101-04	INITIATING EVENT OCCURRENCE PROBABILITY (LOOP)
			RCP----SEAL	RCP SEAL LOCA
2	1.4E-08	23.0	FA6-101-04_B37	FIRE IGNITION FREQUENCY OF FA6-101-04 BY BIN 37
			EPSCF4DLLRGTG-ALL	CLASS-1E GTG A,B,C,D FAIL TO RUN AFTER FIRST HOUR OF OPERATION (CCF)
			EPSOO02RDG	(HE) FAIL TO CONNECT THE ALTERNATE AC POWER SOURCE TO CLASS 1E BUS
			FA6-101-04	INITIATING EVENT OCCURRENCE PROBABILITY (LOOP)
			RCP----SEAL	RCP SEAL LOCA
3	3.2E-09	5.3	FA6-101-04_B36	FIRE IGNITION FREQUENCY OF FA6-101-04 BY BIN 36
			EPSCF4DLADGTG-ALL	CLASS-1E GTG A,B,C,D FAIL TO START (CCF)
			EPSOO02RDG	(HE) FAIL TO CONNECT THE ALTERNATE AC POWER SOURCE TO CLASS 1E BUS
			FA6-101-04	INITIATING EVENT OCCURRENCE PROBABILITY (LOOP)
			RCP----SEAL	RCP SEAL LOCA
4	3.0E-09	4.9	FA6-101-04_B37	FIRE IGNITION FREQUENCY OF FA6-101-04 BY BIN 37
			EPSCF4DLADGTG-ALL	CLASS-1E GTG A,B,C,D FAIL TO START (CCF)
			EPSOO02RDG	(HE) FAIL TO CONNECT THE ALTERNATE AC POWER SOURCE TO CLASS 1E BUS
			FA6-101-04	INITIATING EVENT OCCURRENCE PROBABILITY (LOOP)
			RCP----SEAL	RCP SEAL LOCA
5	2.3E-09	3.9	FA6-101-04_B36	FIRE IGNITION FREQUENCY OF FA6-101-04 BY BIN 36
			EPSCF4DLSRGTG-ALL	CLASS-1E GTG A,B,C,D FAIL TO RUN DURING FIRST HOUR OF OPERATION (CCF)
			EPSOO02RDG	(HE) FAIL TO CONNECT THE ALTERNATE AC POWER SOURCE TO CLASS 1E BUS
			FA6-101-04	INITIATING EVENT OCCURRENCE PROBABILITY (LOOP)
			RCP----SEAL	RCP SEAL LOCA

Table 19.1-60 Cutsets for Dominant Scenarios (FA6-101-04) (Sheet 6 of 14)

No.	Cut Set Freq. (/RY)	Percent (%)	Cutsets	Basic Event Name
6	2.2E-09	3.6	FA6-101-04_B37	FIRE IGNITION FREQUENCY OF FA6-101-04 BY BIN 37
			EPSCF4DLSRGTG-ALL	CLASS-1E GTG A,B,C,D FAIL TO RUN DURING FIRST HOUR OF OPERATION (CCF)
			EPSOO02RDG	(HE) FAIL TO CONNECT THE ALTERNATE AC POWER SOURCE TO CLASS 1E BUS
			FA6-101-04	INITIATING EVENT OCCURRENCE PROBABILITY (LOOP)
			RCP----SEAL	RCP SEAL LOCA
7	1.0E-09	1.7	FA6-101-04_B36	FIRE IGNITION FREQUENCY OF FA6-101-04 BY BIN 36
			EPSCF2DLLRAAC-ALL	AAC A,B FAIL TO RUN AFTER FIRST HOUR OF OPERATION (CCF)
			EPSCF4DLLRGTG-ALL	CLASS-1E GTG A,B,C,D FAIL TO RUN AFTER FIRST HOUR OF OPERATION (CCF)
			FA6-101-04	INITIATING EVENT OCCURRENCE PROBABILITY (LOOP)
			RCP----SEAL	RCP SEAL LOCA
8	9.7E-10	1.6	FA6-101-04_B37	FIRE IGNITION FREQUENCY OF FA6-101-04 BY BIN 37
			EPSCF2DLLRAAC-ALL	AAC A,B FAIL TO RUN AFTER FIRST HOUR OF OPERATION (CCF)
			EPSCF4DLLRGTG-ALL	CLASS-1E GTG A,B,C,D FAIL TO RUN AFTER FIRST HOUR OF OPERATION (CCF)
			FA6-101-04	INITIATING EVENT OCCURRENCE PROBABILITY (LOOP)
			RCP----SEAL	RCP SEAL LOCA
9	6.0E-10	1.0	FA6-101-04_B31	FIRE IGNITION FREQUENCY OF FA6-101-04 BY BIN 31
			EPSCF4DLLRGTG-ALL	CLASS-1E GTG A,B,C,D FAIL TO RUN AFTER FIRST HOUR OF OPERATION (CCF)
			EPSOO02RDG	(HE) FAIL TO CONNECT THE ALTERNATE AC POWER SOURCE TO CLASS 1E BUS
			FA6-101-04	INITIATING EVENT OCCURRENCE PROBABILITY (LOOP)
			RCP----SEAL	RCP SEAL LOCA
10	5.6E-10	0.93	FA6-101-04_B36	FIRE IGNITION FREQUENCY OF FA6-101-04 BY BIN 36
			EPSCF4SEFFGTG-ALL	CLASS-1E GTG A,B,C,D SEQUENCER FAIL TO OPERATE (CCF)
			EPSOO02RDG	(HE) FAIL TO CONNECT THE ALTERNATE AC POWER SOURCE TO CLASS 1E BUS
			FA6-101-04	INITIATING EVENT OCCURRENCE PROBABILITY (LOOP)
			RCP----SEAL	RCP SEAL LOCA

Table 19.1-60 Cutsets for Dominant Scenarios (FA2-202) (Sheet 7 of 14)

No.	Cut Set Freq. (/RY)	Percent (%)	Cutsets	Basic Event Name
1	1.6E-09	3.8	FA2-202_B15	IGNITION SOURCE - ELECTRICAL CABINETS
			EFWOO01006FIREAB	(HE) FAIL TO CHANGEOVER EFW PIT from B to A
			FA2-202_14	INITIATING EVENT OCCURRENCE PROBABILITY (TRANSA)
			HPIOO02FWBD	(HE) FAIL TO OPEN SAFETY DEPRESSURIZATION VALVE AND START SAFETY INJECTION PUMP
			SWSTMPE001B	EWS-MPP-001B (B-ESW PUMP) TEST & MAINTENANCE
2	1.3E-09	3.1	FA2-202_B15	IGNITION SOURCE - ELECTRICAL CABINETS
			EFWOO01006FIREAB	(HE) FAIL TO CHANGEOVER EFW PIT from B to A
			FA2-202_14	INITIATING EVENT OCCURRENCE PROBABILITY (TRANSA)
			HPIOO02FWBD	(HE) FAIL TO OPEN SAFETY DEPRESSURIZATION VALVE AND START SAFETY INJECTION PUMP
			VCWCHBD001B	VWS-MEQ-001B (B-ESSENTIAL CHILLER UNIT) FAIL TO START
3	1.1E-09	2.5	FA2-202_B15	IGNITION SOURCE - ELECTRICAL CABINETS
			EFWOO01006FIREAB	(HE) FAIL TO CHANGEOVER EFW PIT from B to A
			FA2-202_14	INITIATING EVENT OCCURRENCE PROBABILITY (TRANSA)
			HPIOO02FWBD	(HE) FAIL TO OPEN SAFETY DEPRESSURIZATION VALVE AND START SAFETY INJECTION PUMP
			VCWTMPZ001B	VWS-MPP-001B (B-ESSENTIAL CHILLED WATER PUMP) TEST & MAINTENANCE
4	9.1E-10	2.1	FA2-202_B15	IGNITION SOURCE - ELECTRICAL CABINETS
			EFWOO01006FIREAB	(HE) FAIL TO CHANGEOVER EFW PIT from B to A
			FA2-202_14	INITIATING EVENT OCCURRENCE PROBABILITY (TRANSA)
			HPIOO02FWBD	(HE) FAIL TO OPEN SAFETY DEPRESSURIZATION VALVE AND START SAFETY INJECTION PUMP
			SGNCBYFESFBN2CPB	ESFAS-B NO.2 CPU EPS_TRAIN-B POWER MODULE FAILURE
5	8.4E-10	2.0	FA2-202_B15	IGNITION SOURCE - ELECTRICAL CABINETS
			FA2-202_03	INITIATING EVENT OCCURRENCE PROBABILITY (SLOCA)
			HPICF4PMAD001-ALL	SIS-MPP-001A,B,C,D (SI PUMP) FAIL TO START (CCF)

Table 19.1-60 Cutsets for Dominant Scenarios (FA2-202) (Sheet 8 of 14)

No.	Cut Set Freq. (/RY)	Percent (%)	Cutsets	Basic Event Name
6	7.3E-10	1.7	FA2-202_B15	IGNITION SOURCE - ELECTRICAL CABINETS
			EFWOO01006FIREAB	(HE) FAIL TO CHANGEOVER EFW PIT from B to A
			FA2-202_14	INITIATING EVENT OCCURRENCE PROBABILITY (TRANSA)
			HPIOO02FWBD	(HE) FAIL TO OPEN SAFETY DEPRESSURIZATION VALVE AND START SAFETY INJECTION PUMP
			SGNNWIFS2003B2	ESFAS-B NO.2 NETWORK I/F CARD FOR SAFETY BUS S2003B2 FAILURE
7	6.3E-10	1.5	FA2-202_B15	IGNITION SOURCE - ELECTRICAL CABINETS
			FA2-202_03	INITIATING EVENT OCCURRENCE PROBABILITY (SLOCA)
			RSSCF4MVOD004-ALL	CSS-MOV-004A,B,C,D FAIL TO OPEN (CCF)
8	6.3E-10	1.5	FA2-202_B15	IGNITION SOURCE - ELECTRICAL CABINETS
			FA2-202_03	INITIATING EVENT OCCURRENCE PROBABILITY (SLOCA)
			RSSCF4MVOD145-ALL	NCS-MOV-145A,B,C,D FAIL TO OPEN (CCF)
9	6.2E-10	1.4	FA2-202_B15	IGNITION SOURCE - ELECTRICAL CABINETS
			EFWOO01006FIREAB	(HE) FAIL TO CHANGEOVER EFW PIT from B to A
			FA2-202_14	INITIATING EVENT OCCURRENCE PROBABILITY (TRANSA)
			HPIOO02FWBD	(HE) FAIL TO OPEN SAFETY DEPRESSURIZATION VALVE AND START SAFETY INJECTION PUMP
			SGNCPUCS2001B2	ESFAS-B NO.2 CPU CARD S2001B2 FAILURE
10	5.4E-10	1.3	FA2-202_B15	IGNITION SOURCE - ELECTRICAL CABINETS
			EFWMVFC017D	EFS-MOV-017D FAIL TO CONTROL
			FA2-202_14	INITIATING EVENT OCCURRENCE PROBABILITY (TRANSA)
			HPIOO02FWBD	(HE) FAIL TO OPEN SAFETY DEPRESSURIZATION VALVE AND START SAFETY INJECTION PUMP

Table 19.1-60 Cutsets for Dominant Scenarios (FA2-205) (Sheet 9 of 14)

No.	Cut Set Freq. (/RY)	Percent (%)	Cutsets	Basic Event Name
1	1.2E-09	4.3	FA2-205_B15 FA2-205_14 SGNBTSWCCF2 SGNOO01S	IGNITION SOURCE - ELECTRICAL CABINETS INITIATING EVENT OCCURRENCE PROBABILITY (TRANSA) GROUP-2 APPLICATION SOFTWARE CCF (HE) FAIL TO START SAFETY INJECTION PUMP BY DAS
2	1.2E-09	4.3	FA2-205_B15 FA2-205_14 HPIOO01SDVDAS SGNBTSWCCF2	IGNITION SOURCE - ELECTRICAL CABINETS INITIATING EVENT OCCURRENCE PROBABILITY (TRANSA) (HE) FAIL TO OPEN SAFETY DEPRESSURIZATION VALVE BY DAS GROUP-2 APPLICATION SOFTWARE CCF
3	8.4E-10	3.0	FA2-205_B15 FA2-205_03 HPICF4PMAD001-ALL	IGNITION SOURCE - ELECTRICAL CABINETS INITIATING EVENT OCCURRENCE PROBABILITY (SLOCA) SIS-MPP-001A,B,C,D (SI PUMP) FAIL TO START (CCF)
4	6.3E-10	2.3	FA2-205_B15 FA2-205_03 RSSCF4MVOD004-ALL	IGNITION SOURCE - ELECTRICAL CABINETS INITIATING EVENT OCCURRENCE PROBABILITY (SLOCA) CSS-MOV-004A,B,C,D FAIL TO OPEN (CCF)
5	6.3E-10	2.3	FA2-205_B15 FA2-205_03 RSSCF4MVOD145-ALL	IGNITION SOURCE - ELECTRICAL CABINETS INITIATING EVENT OCCURRENCE PROBABILITY (SLOCA) NCS-MOV-145A,B,C,D FAIL TO OPEN (CCF)
6	5.4E-10	2.0	FA2-205_B15 EFWMVFC017B FA2-205_14 HPIOO02FWBD	IGNITION SOURCE - ELECTRICAL CABINETS EFS-MOV-017B FAIL TO CONTROL INITIATING EVENT OCCURRENCE PROBABILITY (TRANSA) (HE) FAIL TO OPEN SAFETY DEPRESSURIZATION VALVE AND START SAFETY INJECTION PUMP

Table 19.1-60 Cutsets for Dominant Scenarios (FA2-205) (Sheet 10 of 14)

No.	Cut Set Freq. (/RY)	Percent (%)	Cutsets	Basic Event Name
7	5.4E-10	2.0	FA2-205_B15	IGNITION SOURCE - ELECTRICAL CABINETS
			EFWMVFC017A	EFS-MOV-017A FAIL TO CONTROL
			FA2-205_14	INITIATING EVENT OCCURRENCE PROBABILITY (TRANSA)
			HPIOO02FWBD	(HE) FAIL TO OPEN SAFETY DEPRESSURIZATION VALVE AND START SAFETY INJECTION PUMP
8	5.3E-10	1.9	FA2-205_B15	IGNITION SOURCE - ELECTRICAL CABINETS
			EFWOO01006FIREBA	(HE) FAIL TO CHANGEOVER EFW PIT from A to B
			EFWTMPA001C	EFS-MPP-001C (C-EFW PUMP) TEST & MAINTENANCE
			FA2-205_14	INITIATING EVENT OCCURRENCE PROBABILITY (TRANSA)
			HPIOO02FWBD	(HE) FAIL TO OPEN SAFETY DEPRESSURIZATION VALVE AND START SAFETY INJECTION PUMP
9	3.6E-10	1.3	FA2-205_B15	IGNITION SOURCE - ELECTRICAL CABINETS
			FA2-205_03	INITIATING EVENT OCCURRENCE PROBABILITY (SLOCA)
			HPITMPI001C	SIS-MPP-001C (C-SI PUMP) TEST & MAINTENANCE
			SWSTMPE001B	EWS-MPP-001B (B-ESW PUMP) TEST & MAINTENANCE
10	3.3E-10	1.2	FA2-205_B15	IGNITION SOURCE - ELECTRICAL CABINETS
			EFWOO01006FIREBA	(HE) FAIL TO CHANGEOVER EFW PIT from A to B
			FA2-205_14	INITIATING EVENT OCCURRENCE PROBABILITY (TRANSA)
			HPIOO02FWBD	(HE) FAIL TO OPEN SAFETY DEPRESSURIZATION VALVE AND START SAFETY INJECTION PUMP
			HVATMAH401C	VRS-MAH-401C (C-EFW PUMP AIR HANDLING UNIT) TEST & MAINTENANCE

Table 19.1-60 Cutsets for Dominant Scenarios (FA2-205-M04) (Sheet 11 of 14)

No.	Cut Set Freq. (/RY)	Percent (%)	Cutsets	Basic Event Name
1	1.7E-09	6.1	FA2-205_B15	IGNITION SOURCE - ELECTRICAL CABINETS
			FA2-205-M04	INITIATING EVENT OCCURRENCE PROBABILITY (SLOCA)
			FA2-205-M04_P	FIRE RESISTANT DOOR FAILURE
			HPICF4PMAD001-ALL	SIS-MPP-001A,B,C,D (SI PUMP) FAIL TO START (CCF)
2	1.3E-09	4.6	FA2-205_B15	IGNITION SOURCE - ELECTRICAL CABINETS
			FA2-205-M04	INITIATING EVENT OCCURRENCE PROBABILITY (SLOCA)
			FA2-205-M04_P	FIRE RESISTANT DOOR FAILURE
			RSSCF4MVOD145-ALL	NCS-MOV-145A,B,C,D FAIL TO OPEN (CCF)
3	1.3E-09	4.6	FA2-205_B15	IGNITION SOURCE - ELECTRICAL CABINETS
			FA2-205-M04	INITIATING EVENT OCCURRENCE PROBABILITY (SLOCA)
			FA2-205-M04_P	FIRE RESISTANT DOOR FAILURE
			RSSCF4MVOD004-ALL	CSS-MOV-004A,B,C,D FAIL TO OPEN (CCF)
4	9.2E-10	3.3	FA2-205_B15	IGNITION SOURCE - ELECTRICAL CABINETS
			FA2-205-M04	INITIATING EVENT OCCURRENCE PROBABILITY (SLOCA)
			FA2-205-M04_P	FIRE RESISTANT DOOR FAILURE
			RSSTMRP001C	RHS-MHX-001C (C-CS/RHR HX) TEST & MAINTENANCE
			SWSTMPE001D	EWS-MPP-001D (D-ESW PUMP) TEST & MAINTENANCE
5	7.4E-10	2.6	FA2-205_B15	IGNITION SOURCE - ELECTRICAL CABINETS
			FA2-205-M04	INITIATING EVENT OCCURRENCE PROBABILITY (SLOCA)
			FA2-205-M04_P	FIRE RESISTANT DOOR FAILURE
			RSSTMPI001C	RHS-MPP-001C (C-CS/RHR PUMP) TEST & MAINTENANCE
			SWSTMPE001D	EWS-MPP-001D (D-ESW PUMP) TEST & MAINTENANCE
6	7.4E-10	2.6	FA2-205_B15	IGNITION SOURCE - ELECTRICAL CABINETS
			FA2-205-M04	INITIATING EVENT OCCURRENCE PROBABILITY (SLOCA)
			FA2-205-M04_P	FIRE RESISTANT DOOR FAILURE
			HPITMPI001C	SIS-MPP-001C (C-SI PUMP) TEST & MAINTENANCE
			SWSTMPE001D	EWS-MPP-001D (D-ESW PUMP) TEST & MAINTENANCE

Table 19.1-60 Cutsets for Dominant Scenarios (FA2-205-M04) (Sheet 12 of 14)

No.	Cut Set Freq. (/RY)	Percent (%)	Cutsets	Basic Event Name
7	6.7E-10	2.4	FA2-205_B15	IGNITION SOURCE - ELECTRICAL CABINETS
			EFWOO01006FIREAB	(HE) FAIL TO CHANGEOVER EFW PIT FROM B TO A
			FA2-205-M04	INITIATING EVENT OCCURRENCE PROBABILITY (SLOCA)
			FA2-205-M04_P	FIRE RESISTANT DOOR FAILURE
			HPIOO02FWBD-S	(HE) FAIL TO OPEN SAFETY DEPRESSURIZATION VALVE
8	5.4E-10	1.9	FA2-205_B15	IGNITION SOURCE - ELECTRICAL CABINETS
			CWSTMRC001D	NCS-MHX-001D (D-CCW HX) TEST & MAINTENANCE
			FA2-205-M04	INITIATING EVENT OCCURRENCE PROBABILITY (SLOCA)
			FA2-205-M04_P	FIRE RESISTANT DOOR FAILURE
			RSSTMRP001C	RHS-MHX-001C (C-CS/RHR HX) TEST & MAINTENANCE
9	4.6E-10	1.6	FA2-205_B15	IGNITION SOURCE - ELECTRICAL CABINETS
			CWSTMPC001D	NCS-MPP-001D (D-CCW PUMP) TEST & MAINTENANCE
			FA2-205-M04	INITIATING EVENT OCCURRENCE PROBABILITY (SLOCA)
			FA2-205-M04_P	FIRE RESISTANT DOOR FAILURE
			RSSTMRP001C	RHS-MHX-001C (C-CS/RHR HX) TEST & MAINTENANCE
10	4.3E-10	1.5	FA2-205_B15	IGNITION SOURCE - ELECTRICAL CABINETS
			CWSTMRC001D	NCS-MHX-001D (D-CCW HX) TEST & MAINTENANCE
			FA2-205-M04	INITIATING EVENT OCCURRENCE PROBABILITY (SLOCA)
			FA2-205-M04_P	FIRE RESISTANT DOOR FAILURE
			HPITMPI001C	SIS-MPP-001C (C-SI PUMP) TEST & MAINTENANCE

Table 19.1-60 Cutsets for Dominant Scenarios (FA2-202-M04) (Sheet 13 of 14)

No.	Cut Set Freq. (/RY)	Percent (%)	Cutsets	Basic Event Name
1	1.7E-09	6.3	FA2-202_B15	IGNITION SOURCE - ELECTRICAL CABINETS
			FA2-202-M04	INITIATING EVENT OCCURRENCE PROBABILITY (SLOCA)
			FA2-202-M04_P	FIRE RESISTANT DOOR FAILURE
			HPICF4PMAD001-ALL	SIS-MPP-001A,B,C,D (SI PUMP) FAIL TO START (CCF)
2	1.3E-09	4.8	FA2-202_B15	IGNITION SOURCE - ELECTRICAL CABINETS
			FA2-202-M04	INITIATING EVENT OCCURRENCE PROBABILITY (SLOCA)
			FA2-202-M04_P	FIRE RESISTANT DOOR FAILURE
			RSSCF4MVOD004-ALL	CSS-MOV-004A,B,C,D FAIL TO OPEN (CCF)
3	1.3E-09	4.8	FA2-202_B15	IGNITION SOURCE - ELECTRICAL CABINETS
			FA2-202-M04	INITIATING EVENT OCCURRENCE PROBABILITY (SLOCA)
			FA2-202-M04_P	FIRE RESISTANT DOOR FAILURE
			RSSCF4MVOD145-ALL	NCS-MOV-145A,B,C,D FAIL TO OPEN (CCF)
4	9.2E-10	3.4	FA2-202_B15	IGNITION SOURCE - ELECTRICAL CABINETS
			FA2-202-M04	INITIATING EVENT OCCURRENCE PROBABILITY (SLOCA)
			FA2-202-M04_P	FIRE RESISTANT DOOR FAILURE
			RSSTMRP001C	RHS-MHX-001C (C-CS/RHR HX) TEST & MAINTENANCE
			SWSTMPE001D	EWS-MPP-001D (D-ESW PUMP) TEST & MAINTENANCE
5	7.4E-10	2.7	FA2-202_B15	IGNITION SOURCE - ELECTRICAL CABINETS
			FA2-202-M04	INITIATING EVENT OCCURRENCE PROBABILITY (SLOCA)
			FA2-202-M04_P	FIRE RESISTANT DOOR FAILURE
			HPITMPI001C	SIS-MPP-001C (C-SI PUMP) TEST & MAINTENANCE
			SWSTMPE001D	EWS-MPP-001D (D-ESW PUMP) TEST & MAINTENANCE
6	7.4E-10	2.7	FA2-202_B15	IGNITION SOURCE - ELECTRICAL CABINETS
			FA2-202-M04	INITIATING EVENT OCCURRENCE PROBABILITY (SLOCA)
			FA2-202-M04_P	FIRE RESISTANT DOOR FAILURE
			RSSTMPI001C	RHS-MPP-001C (C-CS/RHR PUMP) TEST & MAINTENANCE
			SWSTMPE001D	EWS-MPP-001D (D-ESW PUMP) TEST & MAINTENANCE

Table 19.1-60 Cutsets for Dominant Scenarios (FA2-202-M04) (Sheet 14 of 14)

No.	Cut Set Freq. (/RY)	Percent (%)	Cutsets	Basic Event Name
7	6.7E-10	2.5	FA2-202_B15	IGNITION SOURCE - ELECTRICAL CABINETS
			EFWOO01006FIREAB	(HE) FAIL TO CHANGEOVER EFW PIT FROM B TO A
			FA2-202-M04	INITIATING EVENT OCCURRENCE PROBABILITY (SLOCA)
			FA2-202-M04_P	FIRE RESISTANT DOOR FAILURE
			HPIOO02FWBD-S	(HE) FAIL TO OPEN SAFETY DEPRESSURIZATION VALVE
8	5.4E-10	2.0	FA2-202_B15	IGNITION SOURCE - ELECTRICAL CABINETS
			CWSTMRC001D	NCS-MHX-001D (D-CCW HX) TEST & MAINTENANCE
			FA2-202-M04	INITIATING EVENT OCCURRENCE PROBABILITY (SLOCA)
			FA2-202-M04_P	FIRE RESISTANT DOOR FAILURE
			RSSTMRP001C	RHS-MHX-001C (C-CS/RHR HX) TEST & MAINTENANCE
9	4.6E-10	1.7	FA2-202_B15	IGNITION SOURCE - ELECTRICAL CABINETS
			CWSTMPC001D	NCS-MPP-001D (D-CCW PUMP) TEST & MAINTENANCE
			FA2-202-M04	INITIATING EVENT OCCURRENCE PROBABILITY (SLOCA)
			FA2-202-M04_P	FIRE RESISTANT DOOR FAILURE
			RSSTMRP001C	RHS-MHX-001C (C-CS/RHR HX) TEST & MAINTENANCE
10	4.3E-10	1.6	FA2-202_B15	IGNITION SOURCE - ELECTRICAL CABINETS
			CWSTMRC001D	NCS-MHX-001D (D-CCW HX) TEST & MAINTENANCE
			FA2-202-M04	INITIATING EVENT OCCURRENCE PROBABILITY (SLOCA)
			FA2-202-M04_P	FIRE RESISTANT DOOR FAILURE
			HPITMPI001C	SIS-MPP-001C (C-SI PUMP) TEST & MAINTENANCE

Table 19.1-61 Cutsets for Dominant Scenarios for LRF (Sheet 1 of 15)

(FA6-101-01)

No.	Cutsets Freq.(/RY)	Percent (%)	Cutsets	Basic Event Name
1	1.3E-09	5.7	FA6-101-01_B32	Fire Ignition Frequency of FA6-101-01 by Bin 32
			FA6-101-01_10	Initiating Event Occurrence Probability
			RTPBTSWCCF	BASIC SOFTWARE CCF
2	9.5E-10	4.2	FA6-101-01_B35	Fire Ignition Frequency of FA6-101-01 by Bin 35
			FA6-101-01_10	Initiating Event Occurrence Probability
			RTPBTSWCCF	BASIC SOFTWARE CCF
3	8.7E-10	3.8	FA6-101-01_B32	Fire Ignition Frequency of FA6-101-01 by Bin 32
			FA6-101-01_10	Initiating Event Occurrence Probability
			LR-8A	CCFP FOR SPECIFIC PDS
			RTPDASF	DAS FAILURE
			SGNBTSWCCF2	GROUP-2 APPLICATION SOFTWARE CCF
4	7.5E-10	3.3	FA6-101-01_B36	Fire Ignition Frequency of FA6-101-01 by Bin 36
			FA6-101-01_10	Initiating Event Occurrence Probability
			RTPBTSWCCF	BASIC SOFTWARE CCF
5	7.2E-10	3.2	FA6-101-01_B37	Fire Ignition Frequency of FA6-101-01 by Bin 37
			FA6-101-01_10	Initiating Event Occurrence Probability
			RTPBTSWCCF	BASIC SOFTWARE CCF
6	6.5E-10	2.9	FA6-101-01_B34	Fire Ignition Frequency of FA6-101-01 by Bin 34
			FA6-101-01_10	Initiating Event Occurrence Probability
			RTPBTSWCCF	BASIC SOFTWARE CCF
7	6.5E-10	2.9	FA6-101-01_B32	Fire Ignition Frequency of FA6-101-01 by Bin 32
			FA6-101-01_10	Initiating Event Occurrence Probability
			RSSOO01CSP	(HE) FAIL TO START CV SPRAY SYSTEM
			SGNBTSWCCF2	GROUP-2 APPLICATION SOFTWARE CCF

Table 19.1-61 Cutsets for Dominant Scenarios for LRF (Sheet 2 of 15)

(FA6-101-01)

No.	Cutsets Freq.(/RY)	Percent (%)	Cutsets	Basic Event Name
8	6.3E-10	2.8	FA6-101-01_B35	Fire Ignition Frequency of FA6-101-01 by Bin 35
			FA6-101-01_10	Initiating Event Occurrence Probability
			LR-8A	CCFP FOR SPECIFIC PDS
			RTPDASF	DAS FAILURE
			SGNBTSWCCF2	GROUP-2 APPLICATION SOFTWARE CCF
9	5.0E-10	2.2	FA6-101-01_B36	Fire Ignition Frequency of FA6-101-01 by Bin 36
			FA6-101-01_10	Initiating Event Occurrence Probability
			LR-8A	CCFP FOR SPECIFIC PDS
			RTPDASF	DAS FAILURE
			SGNBTSWCCF2	GROUP-2 APPLICATION SOFTWARE CCF
10	5.0E-10	2.2	FA6-101-01_B32	Fire Ignition Frequency of FA6-101-01 by Bin 32
			FA6-101-01_10	Initiating Event Occurrence Probability
			FDAOO01SDVDAS	(HE) FAIL TO OPEN SAFETY DEPRESSURIZATION VALVE BY DAS (AFTER CORE MELT)
			LR-8A	CCFP FOR SPECIFIC PDS
			SGNBTSWCCF2	GROUP-2 APPLICATION SOFTWARE CCF
			SGNOO01S	(HE) FAIL TO START SAFETY INJECTION PUMP BY DAS

Table 19.1-61 Cutsets for Dominant Scenarios for LRF (Sheet 3 of 15)

(YARD)

No.	Cutsets Freq.(/RY)	Percent (%)	Cutsets	Basic Event Name
1	2.3E-10	1.4	FA7-305_B27	Fire Ignition Frequency of FA7-305 by Bin 27
			1CF	REACTOR CAVITY FLOODING FAILS DUE TO LOSS OF POWER SUPPLY
			1FD	RCS DEPRESSURIZATION FAILS DUE TO LOSS OF POWER SUPPLY
			EPSCF4DLLRGTG-ALL	CLASS-1E GTG A,B,C,D FAIL TO RUN AFTER FIRST HOUR OF OPERATION (CCF)
			EPSOO02RDG	(HE) FAIL TO CONNECT THE ALTERNATE AC POWER SOURCE TO CLASS 1E BUS
			FA7-305_LOOP	Initiating Event Occurrence Probability
			LR-5A	CCFP FOR SPECIFIC PDS
			RCP----SEAL	RCP SEAL LOCA
2	2.3E-10	1.4	FA7-304_B27	Fire Ignition Frequency of FA7-304 by Bin 27
			1CF	REACTOR CAVITY FLOODING FAILS DUE TO LOSS OF POWER SUPPLY
			1FD	RCS DEPRESSURIZATION FAILS DUE TO LOSS OF POWER SUPPLY
			EPSCF4DLLRGTG-ALL	CLASS-1E GTG A,B,C,D FAIL TO RUN AFTER FIRST HOUR OF OPERATION (CCF)
			EPSOO02RDG	(HE) FAIL TO CONNECT THE ALTERNATE AC POWER SOURCE TO CLASS 1E BUS
			FA7-304_LOOP	Initiating Event Occurrence Probability
			LR-5A	CCFP FOR SPECIFIC PDS
			RCP----SEAL	RCP SEAL LOCA
3	2.3E-10	1.4	FA7-308_B27	Fire Ignition Frequency of FA7-308 by Bin 27
			1CF	REACTOR CAVITY FLOODING FAILS DUE TO LOSS OF POWER SUPPLY
			1FD	RCS DEPRESSURIZATION FAILS DUE TO LOSS OF POWER SUPPLY
			EPSCF4DLLRGTG-ALL	CLASS-1E GTG A,B,C,D FAIL TO RUN AFTER FIRST HOUR OF OPERATION (CCF)
			EPSOO02RDG	(HE) FAIL TO CONNECT THE ALTERNATE AC POWER SOURCE TO CLASS 1E BUS
			FA7-308_LOOP	Initiating Event Occurrence Probability
			LR-5A	CCFP FOR SPECIFIC PDS
			RCP----SEAL	RCP SEAL LOCA

Table 19.1-61 Cutsets for Dominant Scenarios for LRF (Sheet 4 of 15)

(YARD)

No.	Cutsets Freq.(/RY)	Percent (%)	Cutsets	Basic Event Name
4	2.3E-10	1.4	FA7-301_B27	Fire Ignition Frequency of FA7-301 by Bin 27
			1CF	REACTOR CAVITY FLOODING FAILS DUE TO LOSS OF POWER SUPPLY
			1FD	RCS DEPRESSURIZATION FAILS DUE TO LOSS OF POWER SUPPLY
			EPSCF4DLLRGTG-ALL	CLASS-1E GTG A,B,C,D FAIL TO RUN AFTER FIRST HOUR OF OPERATION (CCF)
			EPSOO02RDG	(HE) FAIL TO CONNECT THE ALTERNATE AC POWER SOURCE TO CLASS 1E BUS
			FA7-301_LOOP	Initiating Event Occurrence Probability
			LR-5A	CCFP FOR SPECIFIC PDS
			RCP----SEAL	RCP SEAL LOCA
5	2.3E-10	1.4	FA7-307_B27	Fire Ignition Frequency of FA7-307 by Bin 27
			1CF	REACTOR CAVITY FLOODING FAILS DUE TO LOSS OF POWER SUPPLY
			1FD	RCS DEPRESSURIZATION FAILS DUE TO LOSS OF POWER SUPPLY
			EPSCF4DLLRGTG-ALL	CLASS-1E GTG A,B,C,D FAIL TO RUN AFTER FIRST HOUR OF OPERATION (CCF)
			EPSOO02RDG	(HE) FAIL TO CONNECT THE ALTERNATE AC POWER SOURCE TO CLASS 1E BUS
			FA7-307_LOOP	Initiating Event Occurrence Probability
			LR-5A	CCFP FOR SPECIFIC PDS
			RCP----SEAL	RCP SEAL LOCA
6	2.3E-10	1.4	FA7-302_B27	Fire Ignition Frequency of FA7-302 by Bin 27
			1CF	REACTOR CAVITY FLOODING FAILS DUE TO LOSS OF POWER SUPPLY
			1FD	RCS DEPRESSURIZATION FAILS DUE TO LOSS OF POWER SUPPLY
			EPSCF4DLLRGTG-ALL	CLASS-1E GTG A,B,C,D FAIL TO RUN AFTER FIRST HOUR OF OPERATION (CCF)
			EPSOO02RDG	(HE) FAIL TO CONNECT THE ALTERNATE AC POWER SOURCE TO CLASS 1E BUS
			FA7-302_LOOP	Initiating Event Occurrence Probability
			LR-5A	CCFP FOR SPECIFIC PDS
			RCP----SEAL	RCP SEAL LOCA

Table 19.1-61 Cutsets for Dominant Scenarios for LRF (Sheet 5 of 15)

(YARD)

No.	Cutsets Freq.(/RY)	Percent (%)	Cutsets	Basic Event Name
7	2.3E-10	1.4	FA7-309_B27	Fire Ignition Frequency of FA7-309 by Bin 27
			1CF	REACTOR CAVITY FLOODING FAILS DUE TO LOSS OF POWER SUPPLY
			1FD	RCS DEPRESSURIZATION FAILS DUE TO LOSS OF POWER SUPPLY
			EPSCF4DLLRGTG-ALL	CLASS-1E GTG A,B,C,D FAIL TO RUN AFTER FIRST HOUR OF OPERATION (CCF)
			EPSOO02RDG	(HE) FAIL TO CONNECT THE ALTERNATE AC POWER SOURCE TO CLASS 1E BUS
			FA7-309_LOOP	Initiating Event Occurrence Probability
			LR-5A	CCFP FOR SPECIFIC PDS
			RCP----SEAL	RCP SEAL LOCA
8	2.3E-10	1.4	FA7-306_B27	Fire Ignition Frequency of FA7-306 by Bin 27
			1CF	REACTOR CAVITY FLOODING FAILS DUE TO LOSS OF POWER SUPPLY
			1FD	RCS DEPRESSURIZATION FAILS DUE TO LOSS OF POWER SUPPLY
			EPSCF4DLLRGTG-ALL	CLASS-1E GTG A,B,C,D FAIL TO RUN AFTER FIRST HOUR OF OPERATION (CCF)
			EPSOO02RDG	(HE) FAIL TO CONNECT THE ALTERNATE AC POWER SOURCE TO CLASS 1E BUS
			FA7-306_LOOP	Initiating Event Occurrence Probability
			LR-5A	CCFP FOR SPECIFIC PDS
			RCP----SEAL	RCP SEAL LOCA
9	2.3E-10	1.4	FA7-303_B27	Fire Ignition Frequency of FA7-303 by Bin 27
			1CF	REACTOR CAVITY FLOODING FAILS DUE TO LOSS OF POWER SUPPLY
			1FD	RCS DEPRESSURIZATION FAILS DUE TO LOSS OF POWER SUPPLY
			EPSCF4DLLRGTG-ALL	CLASS-1E GTG A,B,C,D FAIL TO RUN AFTER FIRST HOUR OF OPERATION (CCF)
			EPSOO02RDG	(HE) FAIL TO CONNECT THE ALTERNATE AC POWER SOURCE TO CLASS 1E BUS
			FA7-303_LOOP	Initiating Event Occurrence Probability
			LR-5A	CCFP FOR SPECIFIC PDS
			RCP----SEAL	RCP SEAL LOCA

Table 19.1-61 Cutsets for Dominant Scenarios for LRF (Sheet 6 of 15)

(YARD)

No.	Cutsets Freq.(/RY)	Percent (%)	Cutsets	Basic Event Name
10	1.4E-10	0.8	FA7-306_B27	Fire Ignition Frequency of FA7-306 by Bin 27
			1CF	REACTOR CAVITY FLOODING FAILS DUE TO LOSS OF POWER SUPPLY
			1FD	RCS DEPRESSURIZATION FAILS DUE TO LOSS OF POWER SUPPLY
			EPSOO02RDG	(HE) FAIL TO CONNECT THE ALTERNATE AC POWER SOURCE TO CLASS 1E BUS
			FA7-306_LOOP	Initiating Event Occurrence Probability
			RCP----SEAL	RCP SEAL LOCA
			SGNBTSWCCF2	GROUP-2 APPLICATION SOFTWARE CCF

Table 19.1-61 Cutsets for Dominant Scenarios for LRF (Sheet 7 of 15)

(FA2-205-M04)

No.	Cutsets Freq.(/RY)	Percent (%)	Cutsets	Basic Event Name
1	1.3E-09	7.6	FA2-205_B15	Fire Ignition Frequency of FA2-205 by Bin 15
			FA2-205-M04	Initiating Event Occurrence Probability
			FA2-205-M04_P	Door
			RSSCF4MVOD004-ALL	CSS-MOV-004A,B,C,D FAIL TO OPEN (CCF)
2	1.3E-09	7.6	FA2-205_B15	Fire Ignition Frequency of FA2-205 by Bin 15
			FA2-205-M04	Initiating Event Occurrence Probability
			FA2-205-M04_P	Door
			RSSCF4MVOD145-ALL	NCS-MOV-145A,B,C,D FAIL TO OPEN (CCF)
3	9.2E-10	5.4	FA2-205_B15	Fire Ignition Frequency of FA2-205 by Bin 15
			FA2-205-M04	Initiating Event Occurrence Probability
			FA2-205-M04_P	Door
			RSSTMRP001C	RHS-MHX-001C (C-CS/RHR HX) TEST & MAINTENANCE
			SWSTMPE001D	EWS-MPP-001D (D-ESW PUMP) TEST & MAINTENANCE
4	7.4E-10	4.4	FA2-205_B15	Fire Ignition Frequency of FA2-205 by Bin 15
			FA2-205-M04	Initiating Event Occurrence Probability
			FA2-205-M04_P	Door
			RSSTMPI001C	RHS-MPP-001C (C-CS/RHR PUMP) TEST & MAINTENANCE
			SWSTMPE001D	EWS-MPP-001D (D-ESW PUMP) TEST & MAINTENANCE
5	5.4E-10	3.2	FA2-205_B15	Fire Ignition Frequency of FA2-205 by Bin 15
			CWSTMRC001D	NCS-MHX-001D (D-CCW HX) TEST & MAINTENANCE
			FA2-205-M04	Initiating Event Occurrence Probability
			FA2-205-M04_P	Door
			RSSTMRP001C	RHS-MHX-001C (C-CS/RHR HX) TEST & MAINTENANCE

Table 19.1-61 Cutsets for Dominant Scenarios for LRF (Sheet 8 of 15)

(FA2-205-M04)

No.	Cutsets Freq.(/RY)	Percent (%)	Cutsets	Basic Event Name
6	4.6E-10	2.7	FA2-205_B15	Fire Ignition Frequency of FA2-205 by Bin 15
			CWSTMPC001D	NCS-MPP-001D (D-CCW PUMP) TEST & MAINTENANCE
			FA2-205-M04	Initiating Event Occurrence Probability
			FA2-205-M04_P	Door
			RSSTMRP001C	RHS-MHX-001C (C-CS/RHR HX) TEST & MAINTENANCE
7	4.3E-10	2.5	FA2-205_B15	Fire Ignition Frequency of FA2-205 by Bin 15
			CWSTMRC001D	NCS-MHX-001D (D-CCW HX) TEST & MAINTENANCE
			FA2-205-M04	Initiating Event Occurrence Probability
			FA2-205-M04_P	Door
			RSSTMPI001C	RHS-MPP-001C (C-CS/RHR PUMP) TEST & MAINTENANCE
8	3.7E-10	2.2	FA2-205_B15	Fire Ignition Frequency of FA2-205 by Bin 15
			CWSTMPC001D	NCS-MPP-001D (D-CCW PUMP) TEST & MAINTENANCE
			FA2-205-M04	Initiating Event Occurrence Probability
			FA2-205-M04_P	Door
			RSSTMPI001C	RHS-MPP-001C (C-CS/RHR PUMP) TEST & MAINTENANCE
9	2.9E-10	1.7	FA2-205_B15	Fire Ignition Frequency of FA2-205 by Bin 15
			FA2-205-M04	Initiating Event Occurrence Probability
			FA2-205-M04_P	Door
			RSSCF4PMAD001-ALL	RHS-MPP-001A,B,C,D (CS/RHR PUMP) FAIL TO START (CCF)
10	2.6E-10	1.6	FA2-205_B15	Fire Ignition Frequency of FA2-205 by Bin 15
			FA2-205-M04	Initiating Event Occurrence Probability
			FA2-205-M04_P	Door
			RSSPMAD001C	RHS-MPP-001C (C-CS/RHR PUMP) FAIL TO START
			SWSTMPE001D	EWS-MPP-001D (D-ESW PUMP) TEST & MAINTENANCE

Table 19.1- 61 Cutsets for Dominant Scenarios for LRF (Sheet 9 of 15)

(FA1-101-17)

No.	Cutsets Freq.(/RY)	Percent (%)	Cutsets	Basic Event Name
1	8.7E-10	5.3	FA1-101-17_B23	Fire Ignition Frequency of FA1-101-17 by Bin 23
			EFWCF2CVOD008-ALL	EFS-VLV-008A,B FAIL TO OPEN (CCF)
			FA1-101-17	Initiating Event Occurrence Probability
			LR-9E	CCFP FOR SPECIFIC PDS
2	6.1E-10	3.7	FA1-101-17_B23	Fire Ignition Frequency of FA1-101-17 by Bin 23
			EFWCF4CVOD018-ALL	EFS-VLV-018A,B,C,D FAIL TO OPEN (CCF)
			FA1-101-17	Initiating Event Occurrence Probability
			LR-9E	CCFP FOR SPECIFIC PDS
3	6.1E-10	3.7	FA1-101-17_B23	Fire Ignition Frequency of FA1-101-17 by Bin 23
			EFWCF4CVOD012-ALL	EFS-VLV-012A,B,C,D FAIL TO OPEN (CCF)
			FA1-101-17	Initiating Event Occurrence Probability
			LR-9E	CCFP FOR SPECIFIC PDS
4	5.0E-10	3.0	FA1-101-17_B23	Fire Ignition Frequency of FA1-101-17 by Bin 23
			FA1-101-17	Initiating Event Occurrence Probability
			LR-9E	CCFP FOR SPECIFIC PDS
			RTPCF4ICYRRT7001-ALL	SG WATER LEVEL SENSOR (NARROW RANGE) CCF
5	4.9E-10	3.0	FA1-101-17_B23	Fire Ignition Frequency of FA1-101-17 by Bin 23
			EFWOO01006FIREAB	(HE) FAIL TO CHANGEOVER EFW PIT from B to A
			EFWPTAD001A	EFS-MPP-001A (A-EFW PUMP) FAIL TO START
			FA1-101-17	Initiating Event Occurrence Probability
			LR-9E	CCFP FOR SPECIFIC PDS
			SWSTMPE001B	EWS-MPP-001B (B-ESW PUMP) TEST & MAINTENANCE

Table 19.1- 61 Cutsets for Dominant Scenarios for LRF (Sheet 10 of 15)

(FA1-101-17)

No.	Cutsets Freq.(/RY)	Percent (%)	Cutsets	Basic Event Name
6	4.1E-10	2.5	FA1-101-17_B23	Fire Ignition Frequency of FA1-101-17 by Bin 23
			EFWOO01006FIREAB	(HE) FAIL TO CHANGEOVER EFW PIT from B to A
			EFWPTAD001A	EFS-MPP-001A (A-EFW PUMP) FAIL TO START
			FA1-101-17	Initiating Event Occurrence Probability
			LR-9E	CCFP FOR SPECIFIC PDS
			VCWCHBD001B	VWS-MEQ-001B (B-ESSENTIAL CHILLER UNIT) FAIL TO START
7	3.7E-10	2.3	FA1-101-17_B23	Fire Ignition Frequency of FA1-101-17 by Bin 23
			EFWOO01006FIREAB	(HE) FAIL TO CHANGEOVER EFW PIT from B to A
			EFWTMTA001A	EFS-MPP-001A (A-EFW PUMP) TEST & MAINTENANCE
			FA1-101-17	Initiating Event Occurrence Probability
			LR-9E	CCFP FOR SPECIFIC PDS
			SWSTMPE001B	EWS-MPP-001B (B-ESW PUMP) TEST & MAINTENANCE
8	3.3E-10	2.0	FA1-101-17_B23	Fire Ignition Frequency of FA1-101-17 by Bin 23
			EFWOO01006FIREAB	(HE) FAIL TO CHANGEOVER EFW PIT from B to A
			EFWPTAD001A	EFS-MPP-001A (A-EFW PUMP) FAIL TO START
			FA1-101-17	Initiating Event Occurrence Probability
			LR-9E	CCFP FOR SPECIFIC PDS
			VCWTMPZ001B	VWS-MPP-001B (B-ESSENTIAL CHILLED WATER PUMP) TEST & MAINTENANCE
9	3.1E-10	1.9	FA1-101-17_B23	Fire Ignition Frequency of FA1-101-17 by Bin 23
			EFWCF4MVFC017-ALL	EFS-MOV-017A,B,C,D FAIL TO CONTROL (CCF)
			FA1-101-17	Initiating Event Occurrence Probability
			LR-9E	CCFP FOR SPECIFIC PDS

Table 19.1- 61 Cutsets for Dominant Scenarios for LRF (Sheet 11 of 15)

(FA1-101-17)

No.	Cutsets Freq.(/RY)	Percent (%)	Cutsets	Basic Event Name
10	3.1E-10	1.9	FA1-101-17_B23	Fire Ignition Frequency of FA1-101-17 by Bin 23
			EFWOO01006FIREAB	(HE) FAIL TO CHANGEOVER EFW PIT from B to A
			EFWTMTA001A	EFS-MPP-001A (A-EFW PUMP) TEST & MAINTENANCE
			FA1-101-17	Initiating Event Occurrence Probability
			LR-9E	CCFP FOR SPECIFIC PDS
			VCWCHBD001B	VWS-MEQ-001B (B-ESSENTIAL CHILLER UNIT) FAIL TO START

Table 19.1- 61 Cutsets for Dominant Scenarios for LRF (Sheet 12 of 15)

(FA2-202-M04)

No.	Cutsets Freq.(/RY)	Percent (%)	Cutsets	Basic Event Name
1	1.3E-09	8.1	FA2-202_B15	Fire Ignition Frequency of FA2-202 by Bin 15
			FA2-202-M04	Initiating Event Occurrence Probability
			FA2-202-M04_P	Door
			RSSCF4MVOD145-ALL	NCS-MOV-145A,B,C,D FAIL TO OPEN (CCF)
2	1.3E-09	8.1	FA2-202_B15	Fire Ignition Frequency of FA2-202 by Bin 15
			FA2-202-M04	Initiating Event Occurrence Probability
			FA2-202-M04_P	Door
			RSSCF4MVOD004-ALL	CSS-MOV-004A,B,C,D FAIL TO OPEN (CCF)
3	9.2E-10	5.8	FA2-202_B15	Fire Ignition Frequency of FA2-202 by Bin 15
			FA2-202-M04	Initiating Event Occurrence Probability
			FA2-202-M04_P	Door
			RSSTMRP001C	RHS-MHX-001C (C-CS/RHR HX) TEST & MAINTENANCE
			SWSTMPE001D	EWS-MPP-001D (D-ESW PUMP) TEST & MAINTENANCE
4	7.4E-10	4.6	FA2-202_B15	Fire Ignition Frequency of FA2-202 by Bin 15
			FA2-202-M04	Initiating Event Occurrence Probability
			FA2-202-M04_P	Door
			RSSTMPI001C	RHS-MPP-001C (C-CS/RHR PUMP) TEST & MAINTENANCE
			SWSTMPE001D	EWS-MPP-001D (D-ESW PUMP) TEST & MAINTENANCE
5	5.4E-10	3.4	FA2-202_B15	Fire Ignition Frequency of FA2-202 by Bin 15
			CWSTMRC001D	NCS-MHX-001D (D-CCW HX) TEST & MAINTENANCE
			FA2-202-M04	Initiating Event Occurrence Probability
			FA2-202-M04_P	Door
			RSSTMRP001C	RHS-MHX-001C (C-CS/RHR HX) TEST & MAINTENANCE

Table 19.1- 61 Cutsets for Dominant Scenarios for LRF (Sheet 13 of 15)

(FA2-202-M04)

No.	Cutsets Freq.(/RY)	Percent (%)	Cutsets	Basic Event Name
6	4.6E-10	2.9	FA2-202_B15	Fire Ignition Frequency of FA2-202 by Bin 15
			CWSTMPC001D	NCS-MPP-001D (D-CCW PUMP) TEST & MAINTENANCE
			FA2-202-M04	Initiating Event Occurrence Probability
			FA2-202-M04_P	Door
			RSSTMRP001C	RHS-MHX-001C (C-CS/RHR HX) TEST & MAINTENANCE
7	4.3E-10	2.7	FA2-202_B15	Fire Ignition Frequency of FA2-202 by Bin 15
			CWSTMRC001D	NCS-MHX-001D (D-CCW HX) TEST & MAINTENANCE
			FA2-202-M04	Initiating Event Occurrence Probability
			FA2-202-M04_P	Door
			RSSTMPI001C	RHS-MPP-001C (C-CS/RHR PUMP) TEST & MAINTENANCE
8	3.7E-10	2.3	FA2-202_B15	Fire Ignition Frequency of FA2-202 by Bin 15
			CWSTMPC001D	NCS-MPP-001D (D-CCW PUMP) TEST & MAINTENANCE
			FA2-202-M04	Initiating Event Occurrence Probability
			FA2-202-M04_P	Door
			RSSTMPI001C	RHS-MPP-001C (C-CS/RHR PUMP) TEST & MAINTENANCE
9	2.9E-10	1.8	FA2-202_B15	Fire Ignition Frequency of FA2-202 by Bin 15
			FA2-202-M04	Initiating Event Occurrence Probability
			FA2-202-M04_P	Door
			RSSCF4PMAD001-ALL	RHS-MPP-001A,B,C,D (CS/RHR PUMP) FAIL TO START (CCF)
10	2.6E-10	1.7	FA2-202_B15	Fire Ignition Frequency of FA2-202 by Bin 15
			FA2-202-M04	Initiating Event Occurrence Probability
			FA2-202-M04_P	Door
			RSSPMAD001C	RHS-MPP-001C (C-CS/RHR PUMP) FAIL TO START
			SWSTMPE001D	EWS-MPP-001D (D-ESW PUMP) TEST & MAINTENANCE

Table 19.1- 61 Cutsets for Dominant Scenarios for LRF (Sheet 14 of 15)

(FA2-202)

No.	Cutsets Freq.(/RY)	Percent (%)	Cutsets	Basic Event Name
1	6.3E-10	5.1	FA2-202_B15	Fire Ignition Frequency of FA2-202 by Bin 15
			FA2-202_03	Initiating Event Occurrence Probability
			RSSCF4MVOD145-ALL	NCS-MOV-145A,B,C,D FAIL TO OPEN (CCF)
2	6.3E-10	5.1	FA2-202_B15	Fire Ignition Frequency of FA2-202 by Bin 15
			FA2-202_03	Initiating Event Occurrence Probability
			RSSCF4MVOD004-ALL	CSS-MOV-004A,B,C,D FAIL TO OPEN (CCF)
3	2.5E-10	2.0	FA2-202_B15	Fire Ignition Frequency of FA2-202 by Bin 15
			EFWOO01006FIREAB	(HE) FAIL TO CHANGEOVER EFW PIT from B to A
			FA2-202_14	Initiating Event Occurrence Probability
			LR-9A	CCFP FOR SPECIFIC PDS
			PZRMVOD117B	RCS-MOV-117B FAIL TO OPEN
			SWSTMPE001B	EWS-MPP-001B (B-ESW PUMP) TEST & MAINTENANCE
4	2.1E-10	1.7	FA2-202_B15	Fire Ignition Frequency of FA2-202 by Bin 15
			FA2-202_14	Initiating Event Occurrence Probability
			RTPBTSWCCF	BASIC SOFTWARE CCF
5	2.1E-10	1.7	FA2-202_B15	Fire Ignition Frequency of FA2-202 by Bin 15
			EFWOO01006FIREAB	(HE) FAIL TO CHANGEOVER EFW PIT from B to A
			FA2-202_14	Initiating Event Occurrence Probability
			LR-9A	CCFP FOR SPECIFIC PDS
			PZRMVOD117B	RCS-MOV-117B FAIL TO OPEN
			VCWCHBD001B	VWS-MEQ-001B (B-ESSENTIAL CHILLER UNIT) FAIL TO START

Table 19.1- 61 Cutsets for Dominant Scenarios for LRF (Sheet 15 of 15)

(FA2-202)

No.	Cutsets Freq.(/RY)	Percent (%)	Cutsets	Basic Event Name
6	1.7E-10	1.3	FA2-202_B15	Fire Ignition Frequency of FA2-202 by Bin 15
			EFWOO01006FIREAB	(HE) FAIL TO CHANGEOVER EFW PIT from B to A
			FA2-202_14	Initiating Event Occurrence Probability
			LR-9A	CCFP FOR SPECIFIC PDS
			PZRMVOD117B	RCS-MOV-117B FAIL TO OPEN
			VCWTMPZ001B	VWS-MPP-001B (B-ESSENTIAL CHILLED WATER PUMP) TEST & MAINTENANCE
7	1.4E-10	1.1	FA2-202_B15	Fire Ignition Frequency of FA2-202 by Bin 15
			FA2-202_03	Initiating Event Occurrence Probability
			RSSCF4PMAD001-ALL	RHS-MPP-001A,B,C,D (CS/RHR PUMP) FAIL TO START (CCF)
8	1.4E-10	1.1	FA2-202_B15	Fire Ignition Frequency of FA2-202 by Bin 15
			EFWOO01006FIREAB	(HE) FAIL TO CHANGEOVER EFW PIT from B to A
			FA2-202_14	Initiating Event Occurrence Probability
			LR-9A	CCFP FOR SPECIFIC PDS
			PZRMVOD117B	RCS-MOV-117B FAIL TO OPEN
			SGNCBYFESFBN2CPB	ESFAS-B NO.2 CPU EPS_TRAIN-B POWER MODULE FAILURE
9	1.1E-10	0.9	FA2-202_B15	Fire Ignition Frequency of FA2-202 by Bin 15
			EFWOO01006FIREAB	(HE) FAIL TO CHANGEOVER EFW PIT from B to A
			FA2-202_14	Initiating Event Occurrence Probability
			LR-9A	CCFP FOR SPECIFIC PDS
			PZRMVOD117B	RCS-MOV-117B FAIL TO OPEN
			SGNNWIFS2003B2	ESFAS-B NO.2 NETWORK I/F CARD FOR SAFETY BUS S2003B2 FAILURE
10	1.1E-10	0.9	FA2-202_B15	Fire Ignition Frequency of FA2-202 by Bin 15
			FA2-202_14	Initiating Event Occurrence Probability
			OPSLOOP	CONSEQUENTIAL LOOP GIVEN A REACTOR TRIP
			SGNBTSWCCF2	GROUP-2 APPLICATION SOFTWARE CCF

Table 19.1-62 Basic Events (Hardware Failure, Human Error) FV Importance for Fire (Sheet 1 of 10)

Rank	Basic Event ID	Basic Event Description	Basic Event Probability	FV Importance	RAW
1	RCP----SEAL	RCP SEAL LOCA	1.0E+00	3.8E-01	1.0E+00
2	EPSOO02RDG	(HE) FAIL TO CONNECT THE ALTERNATE AC POWER SOURCE TO CLASS 1E BUS	2.1E-02	3.0E-01	1.5E+01
3	FA6-101-01_10	INITIATING EVENT OCCURRENCE PROBABILITY (SLBO)	1.0E+00	2.4E-01	1.0E+00
4	EPSCF4DLLRGTG-ALL	CLASS-1E GTG A,B,C,D FAIL TO RUN AFTER FIRST HOUR OF OPERATION (CCF)	9.9E-04	2.4E-01	2.4E+02
5	HPIOO02FWBD-S	(HE) FAIL TO OPEN SAFETY DEPRESSURIZATION VALVE	2.6E-03	1.2E-01	4.6E+01
6	SGNOO01S	(HE) FAIL TO START SAFETY INJECTION PUMP BY DAS	5.7E-02	1.1E-01	2.8E+00
7	SGNBTSWCCF2	GROUP-2 APPLICATION SOFTWARE CCF	1.0E-05	1.0E-01	1.0E+04
8	EFWOO01006FIREAB	(HE) FAIL TO CHANGEOVER EFW PIT from B to A	1.7E-02	8.8E-02	6.1E+00
9	FA6-101-04	INITIATING EVENT OCCURRENCE PROBABILITY (LOOP)	1.0E+00	7.0E-02	1.0E+00
10	HPIOO02FWBD	(HE) FAIL TO OPEN SAFETY DEPRESSURIZATION VALVE AND START SAFETY INJECTION PUMP	3.8E-03	6.2E-02	1.7E+01
11	EPSCF4DLADGTG-ALL	CLASS-1E GTG A,B,C,D FAIL TO START (CCF)	2.1E-04	5.0E-02	2.4E+02
12	HPIOO01SDVDAS	(HE) FAIL TO OPEN SAFETY DEPRESSURIZATION VALVE BY DAS	5.7E-02	5.0E-02	1.8E+00
13	FA2-202_14	INITIATING EVENT OCCURRENCE PROBABILITY (TRANS)	1.0E+00	4.2E-02	1.0E+00

Table 19.1-62 Basic Events (Hardware Failure, Human Error) FV Importance for Fire (Sheet 2 of 10)

Rank	Basic Event ID	Basic Event Description	Basic Event Probability	FV Importance	RAW
14	EPSCF4DLSRGTG-ALL	CLASS-1E GTG A,B,C,D FAIL TO RUN DURING FIRST HOUR OF OPERATION (CCF)	1.6E-04	3.7E-02	2.4E+02
15	MSRCF4AVCD515-ALL	MSS-SMV-515A,B,C,D FAIL TO CLOSE (CCF)	1.8E-04	3.3E-02	1.9E+02
16	FA7-303_LOOP	INITIATING EVENT OCCURRENCE PROBABILITY (LOOP)	1.0E+00	3.3E-02	1.0E+00
17	FA7-307_LOOP	INITIATING EVENT OCCURRENCE PROBABILITY (LOOP)	1.0E+00	3.3E-02	1.0E+00
18	FA7-304_LOOP	INITIATING EVENT OCCURRENCE PROBABILITY (LOOP)	1.0E+00	3.3E-02	1.0E+00
19	FA7-306_LOOP	INITIATING EVENT OCCURRENCE PROBABILITY (LOOP)	1.0E+00	3.3E-02	1.0E+00
20	FA7-305_LOOP	INITIATING EVENT OCCURRENCE PROBABILITY (LOOP)	1.0E+00	3.3E-02	1.0E+00
21	FA7-309_LOOP	INITIATING EVENT OCCURRENCE PROBABILITY (LOOP)	1.0E+00	3.3E-02	1.0E+00
22	FA7-308_LOOP	INITIATING EVENT OCCURRENCE PROBABILITY (LOOP)	1.0E+00	3.3E-02	1.0E+00
23	FA7-302_LOOP	INITIATING EVENT OCCURRENCE PROBABILITY (LOOP)	1.0E+00	3.3E-02	1.0E+00
24	FA7-301_LOOP	INITIATING EVENT OCCURRENCE PROBABILITY (LOOP)	1.0E+00	3.3E-02	1.0E+00
25	FA2-205-M04_P	FIRE RESISTANT DOOR FAILURE	7.4E-03	3.3E-02	5.4E+00
26	FA2-205-M04	INITIATING EVENT OCCURRENCE PROBABILITY (SLOCA)	1.0E+00	3.3E-02	1.0E+00

Table 19.1-62 Basic Events (Hardware Failure, Human Error) FV Importance for Fire (Sheet 3 of 10)

Rank	Basic Event ID	Basic Event Description	Basic Event Probability	FV Importance	RAW
27	FA2-202-M04_P	FIRE RESISTANT DOOR FAILURE	7.4E-03	3.2E-02	5.2E+00
28	FA2-202-M04	INITIATING EVENT OCCURRENCE PROBABILITY (SLOCA)	1.0E+00	3.2E-02	1.0E+00
29	FA1-101-17	INITIATING EVENT OCCURRENCE PROBABILITY (TRANS)	1.0E+00	2.7E-02	1.0E+00
30	FA2-205-M11_P	FIRE RESISTANT CEILING FAILURE	1.2E-03	2.5E-02	2.1E+01
31	FA2-205-M11	INITIATING EVENT OCCURRENCE PROBABILITY (SLOCA)	1.0E+00	2.5E-02	1.0E+00
32	FA2-202-M11_P	FIRE RESISTANT CEILING FAILURE	1.2E-03	2.5E-02	2.1E+01
33	FA2-202-M11	INITIATING EVENT OCCURRENCE PROBABILITY (SLOCA)	1.0E+00	2.5E-02	1.0E+00
34	EPSCF2DLLRAAC-ALL	AAC A,B FAIL TO RUN AFTER FIRST HOUR OF OPERATION (CCF)	1.5E-03	2.1E-02	1.5E+01
35	SGNBTHWCCF	DIGITAL I&C HARDWARE CCF	2.1E-06	2.0E-02	9.5E+03
36	EFWOO01006FIREBA	(HE) FAIL TO CHANGEOVER EFW PIT from A to B	1.7E-02	2.0E-02	2.2E+00
37	FA2-205	INITIATING EVENT OCCURRENCE PROBABILITY (TRANS)	1.0E+00	2.0E-02	1.0E+00
38	FA6-101-01-M02	INITIATING EVENT OCCURRENCE PROBABILITY (LOOP)	1.0E+00	2.0E-02	1.0E+00
39	FA6-101-01-M02_P	FIRE RESISTANT DOOR FAILURE	7.4E-03	2.0E-02	3.6E+00

Table 19.1-62 Basic Events (Hardware Failure, Human Error) FV Importance for Fire (Sheet 4 of 10)

Rank	Basic Event ID	Basic Event Description	Basic Event Probability	FV Importance	RAW
40	SWSTMPE001B	EWS-MPP-001B (B-ESW PUMP) TEST & MAINTENANCE	1.2E-02	1.9E-02	2.6E+00
41	FA2-202-M10	INITIATING EVENT OCCURRENCE PROBABILITY (LOOP)	1.0E+00	1.8E-02	1.0E+00
42	FA2-202-M10_P	FIRE RESISTANT WALL FAILURE	1.2E-03	1.8E-02	1.6E+01
43	FA2-205-M10_P	FIRE RESISTANT WALL FAILURE	1.2E-03	1.8E-02	1.6E+01
44	FA2-205-M10	INITIATING EVENT OCCURRENCE PROBABILITY (LOOP)	1.0E+00	1.8E-02	1.0E+00
45	RTPDASF	DAS FAILURE	1.0E-02	1.7E-02	2.7E+00
46	EFWPTAD001A	EFS-MPP-001A (A-EFW PUMP) FAIL TO START	6.5E-03	1.6E-02	3.5E+00
47	SWSTMPE001D	EWS-MPP-001D (D-ESW PUMP) TEST & MAINTENANCE	1.2E-02	1.6E-02	2.3E+00
48	FA2-304	INITIATING EVENT OCCURRENCE PROBABILITY (TRANS)	1.0E+00	1.6E-02	1.0E+00
49	RSSTMRP001C	RHS-MHX-001C (C-CS/RHR HX) TEST & MAINTENANCE	5.0E-03	1.5E-02	4.1E+00
50	HPICF4PMAD001-ALL	SIS-MPP-001A,B,C,D (SI PUMP) FAIL TO START (CCF)	1.1E-04	1.5E-02	1.4E+02
51	RTPNWIFRT5002C2	RPS-C GROUP-2 NETWORK I/F CARD FOR SAFETY BUS RT5002C2 FAILURE	5.2E-03	1.4E-02	3.8E+00
52	RTPNWIFRT5001C2	RPS-C GROUP-2 NETWORK I/F CARD FOR UNIT BUS RT5001C2 FAILURE	5.2E-03	1.4E-02	3.8E+00

Table 19.1-62 Basic Events (Hardware Failure, Human Error) FV Importance for Fire (Sheet 5 of 10)

Rank	Basic Event ID	Basic Event Description	Basic Event Probability	FV Importance	RAW
53	SGNTMSPP10012C	CONTAINMENT PRESSURE SENSOR P10012C BYPASS FOR REPAIRS	9.9E-03	1.3E-02	2.3E+00
54	FA1-101-24	INITIATING EVENT OCCURRENCE PROBABILITY (TRANS)	1.0E+00	1.2E-02	1.0E+00
55	RTPCPUCRT5001C2	RPS-C GROUP-2 CPU CARD RT5001C2 FAILURE	4.4E-03	1.2E-02	3.7E+00
56	RSSTMPI001C	RHS-MPP-001C (C-CS/RHR PUMP) TEST & MAINTENANCE	4.0E-03	1.2E-02	4.0E+00
57	VCWCHBD001B	VWS-MEQ-001B (B-ESSENTIAL CHILLER UNIT) FAIL TO START	1.0E-02	1.2E-02	2.2E+00
58	RTPNWIFRT5002D2	RPS-D GROUP-2 NETWORK I/F CARD FOR SAFETY BUS RT5002D2 FAILURE	5.2E-03	1.2E-02	3.2E+00
59	RTPNWIFRT5001D2	RPS-D GROUP-2 NETWORK I/F CARD FOR UNIT BUS RT5001D2 FAILURE	5.2E-03	1.2E-02	3.2E+00
60	HPITMPI001C	SIS-MPP-001C (C-SI PUMP) TEST & MAINTENANCE	4.0E-03	1.2E-02	3.9E+00
61	FA6-101-04-M04	INITIATING EVENT OCCURRENCE PROBABILITY (LOOP)	1.0E+00	1.1E-02	1.0E+00
62	FA6-101-04-M04_P	FIRE RESISTANT WALL FAILURE	1.2E-03	1.1E-02	1.0E+01
63	EPSDLLRAACA-L2	A-AAC FAIL TO LOAD AND RUN AFTER FIRST HOUR OF OPERATION	1.8E-02	1.1E-02	1.6E+00
64	EFWTMTA001A	EFS-MPP-001A (A-EFW PUMP) TEST & MAINTENANCE	5.0E-03	1.1E-02	3.2E+00
65	FA2-312-M08_P	FIRE RESISTANT FLOOR FAILURE	1.2E-03	1.1E-02	1.0E+01

Table 19.1-62 Basic Events (Hardware Failure, Human Error) FV Importance for Fire (Sheet 6 of 10)

Rank	Basic Event ID	Basic Event Description	Basic Event Probability	FV Importance	RAW
66	FA2-312-M08	INITIATING EVENT OCCURRENCE PROBABILITY (SLOCA)	1.0E+00	1.1E-02	1.0E+00
67	FA2-307-M09	INITIATING EVENT OCCURRENCE PROBABILITY (SLOCA)	1.0E+00	1.1E-02	1.0E+00
68	FA2-307-M09_P	FIRE RESISTANT FLOOR FAILURE	1.2E-03	1.1E-02	1.0E+01
69	FA2-205_03	INITIATING EVENT OCCURRENCE PROBABILITY (SLOCA)	3.6E-03	1.1E-02	4.1E+00
70	FA6-101-04-M07	INITIATING EVENT OCCURRENCE PROBABILITY (LOOP)	1.0E+00	1.1E-02	1.0E+00
71	FA6-101-04-M07_P	FIRE RESISTANT WALL FAILURE	1.2E-03	1.1E-02	1.0E+01
72	FA2-302	INITIATING EVENT OCCURRENCE PROBABILITY (TRANS)	1.0E+00	1.1E-02	1.0E+00
73	EPSDLLRAACB-L2	B-AAC FAIL TO LOAD AND RUN AFTER FIRST HOUR OF OPERATION	1.8E-02	1.1E-02	1.6E+00
74	RSSOO01CSP	(HE) FAIL TO START CV SPRAY SYSTEM	5.0E-03	1.0E-02	3.1E+00
75	RTPCPUCRT5001D2	RPS-D GROUP-2 CPU CARD RT5001D2 FAILURE	4.4E-03	1.0E-02	3.2E+00
76	MSRCF4AVCD515-12	MSS-SMV-515B,C FAIL TO CLOSE (CCF)	5.2E-05	9.9E-03	1.9E+02
77	MSRCF4AVCD515-24	MSS-SMV-515B,D FAIL TO CLOSE (CCF)	5.2E-05	9.9E-03	1.9E+02
78	MSRCF4AVCD515-34	MSS-SMV-515A,D FAIL TO CLOSE (CCF)	5.2E-05	9.9E-03	1.9E+02

Table 19.1-62 Basic Events (Hardware Failure, Human Error) FV Importance for Fire (Sheet 7 of 10)

Rank	Basic Event ID	Basic Event Description	Basic Event Probability	FV Importance	RAW
79	MSRCF4AVCD515-23	MSS-SMV-515B,CFAIL TO CLOSE (CCF)	5.2E-05	9.9E-03	1.9E+02
80	MSRCF4AVCD515-13	MSS-SMV-515A,C FAIL TO CLOSE (CCF)	5.2E-05	9.9E-03	1.9E+02
81	MSRCF4AVCD515-14	MSS-SMV-515C,D FAIL TO CLOSE (CCF)	5.2E-05	9.9E-03	1.9E+02
82	FA2-308	INITIATING EVENT OCCURRENCE PROBABILITY (TRANS)	1.0E+00	9.7E-03	1.0E+00
83	VCWTMPZ001B	VWS-MPP-001B (B-ESSENTIAL CHILLED WATER PUMP) TEST & MAINTENANCE	8.0E-03	9.7E-03	2.2E+00
84	SGNTMSPP10012D	CONTAINMENT PRESSURE SENSOR P10012D BYPASS FOR REPAIRS	9.9E-03	9.4E-03	1.9E+00
85	RTPNWIFRT5002B2	RPS-B GROUP-2 NETWORK I/F CARD FOR SAFETY BUS RT5002B2 FAILURE	5.2E-03	9.4E-03	2.8E+00
86	RTPNWIFRT5001B2	RPS-B GROUP-2 NETWORK I/F CARD FOR UNIT BUS RT5001B2 FAILURE	5.2E-03	9.4E-03	2.8E+00
87	RSPEVA	PROBABILITY OF EVACUATION FROM THE MCR TO THE RSC ROOM WHEN A FIRE HAS OCCURRED IN THE MCR	2.0E-01	9.4E-03	1.0E+00
88	HPIOO02FWBD-R	(HE) FAIL TO OPEN SAFETY DEPRESSURIZATION VALVE AND START SAFETY INJECTION PUMP BY RSC	1.0E-01	9.3E-03	1.1E+00
89	CWSTMRC001D	NCS-MHX-001D (D-CCW HX) TEST & MAINTENANCE	7.0E-03	9.3E-03	2.3E+00
90	FA2-309	INITIATING EVENT OCCURRENCE PROBABILITY (TRANS)	1.0E+00	9.2E-03	1.0E+00

Table 19.1-62 Basic Events (Hardware Failure, Human Error) FV Importance for Fire (Sheet 8 of 10)

Rank	Basic Event ID	Basic Event Description	Basic Event Probability	FV Importance	RAW
91	FA3-109	INITIATING EVENT OCCURRENCE PROBABILITY (TRANS)	1.0E+00	8.9E-03	1.0E+00
92	EPSCF4SEFFGTG-ALL	CLASS-1E GTG A,B,C,D SEQUENCER FAIL TO OPERATE (CCF)	3.8E-05	8.8E-03	2.4E+02
93	EFWPTAD001D	EFS-MPP-001D (D-EFW PUMP) FAIL TO START	6.5E-03	8.2E-03	2.2E+00
94	PZRMVOD117B	RCS-MOV-117B FAIL TO OPEN	8.7E-04	8.1E-03	1.0E+01
95	RTPCPUCRT5001B2	RPS-B GROUP-2 CPU CARD RT5001B2 FAILURE	4.4E-03	7.9E-03	2.8E+00
96	CWSTMPC001D	NCS-MPP-001D (D-CCW PUMP) TEST & MAINTENANCE	6.0E-03	7.9E-03	2.3E+00
97	RTPBSIFRT5002C2	RPS-C GROUP-2 BUS MASTER CARD FOR ESFAS OUTPUT 5002C2 FAILURE	3.0E-03	7.9E-03	3.7E+00
98	RTPBSIFRT5001C2	RPS-C GROUP-2 BUS MASTER CARD FOR RPS COMMUNICATION 5001C2 FAILURE	3.0E-03	7.9E-03	3.7E+00
99	RTPBSIFRT5003C2	RPS-C GROUP-2 BUS MASTER CARD FOR I/O 5003C2 FAILURE	3.0E-03	7.9E-03	3.7E+00
100	RSSCF4MVOD145-ALL	NCS-MOV-145A,B,C,D FAIL TO OPEN (CCF)	8.4E-05	7.9E-03	9.5E+01
101	FA3-103	INITIATING EVENT OCCURRENCE PROBABILITY (TRANS)	1.0E+00	7.7E-03	1.0E+00
102	RTPBTSWCCF	BASIC SOFTWARE CCF	1.0E-07	7.7E-03	7.5E+04
103	RSSCF4MVOD004-ALL	CSS-MOV-004A,B,C,D FAIL TO OPEN (CCF)	8.4E-05	7.7E-03	9.3E+01

Table 19.1-62 Basic Events (Hardware Failure, Human Error) FV Importance for Fire (Sheet 9 of 10)

Rank	Basic Event ID	Basic Event Description	Basic Event Probability	FV Importance	RAW
104	PZRCF2MVOD117-ALL	RCS-MOV-117A,B FAIL TO OPEN (CCF)	1.3E-04	7.4E-03	6.0E+01
105	SGNTMSPP10012B	CONTAINMENT PRESSURE SENSOR P10012B BYPASS FOR REPAIRS	9.9E-03	7.4E-03	1.7E+00
106	EFWOO01014	(HE) FAIL TO OPEN EFW TIE-LINE VALVE BETWEEN TRAINS	2.6E-03	7.2E-03	3.8E+00
107	ACWOO02FS	(HE) FAIL TO ESTABLISH THE ALTERNATE CCWS BY FIRE PROTECTION WATER SUPPLY SYSTEM	1.1E-02	6.9E-03	1.6E+00
108	RTPSMCART5001C2	RPS-C GROUP-2 SYSTEM MANAGEMENT CARD RT5001C2 FAILURE	2.5E-03	6.7E-03	3.7E+00
109	SGNCBYFRPSBPPCPB	RPS-B GROUP-2 CPU EPS_TRAIN-B POWER MODULE FAILURE	6.5E-03	6.6E-03	2.0E+00
110	FA2-202_03	INITIATING EVENT OCCURRENCE PROBABILITY (SLOCA)	3.6E-03	6.6E-03	2.8E+00
111	RTPBSIFRT5003D2	RPS-D GROUP-2 BUS MASTER CARD FOR I/O 5003D2 FAILURE	3.0E-03	6.4E-03	3.2E+00
112	RTPBSIFRT5001D2	RPS-D GROUP-2 BUS MASTER CARD FOR RPS COMMUNICATION 5001D2 FAILURE	3.0E-03	6.4E-03	3.2E+00
113	RTPBSIFRT5002D2	RPS-D GROUP-2 BUS MASTER CARD FOR ESFAS OUTPUT 5002D2 FAILURE	3.0E-03	6.4E-03	3.2E+00
114	ACWOO02CT-DP2	(HE) FAIL TO ESTABLISH THE ALTERNATE CCWS BY NON-ESSENTIAL CHILLED WATER SYSTEM COOLING TOWER	5.1E-01	6.4E-03	1.0E+00
115	EPSOO01UATRAT	(HE) FAIL TO SEPARATE 52/UATA,D,52/RATA,D (BREAKER) AT LOCAL	1.6E-02	6.1E-03	1.4E+00

Table 19.1-62 Basic Events (Hardware Failure, Human Error) FV Importance for Fire (Sheet 10 of 10)

Rank	Basic Event ID	Basic Event Description	Basic Event Probability	FV Importance	RAW
116	EFWOO01006FIREAB-R	(HE) FAIL TO CHANGEOVER EFW PIT from B to A BY RSC	1.0E-01	5.8E-03	1.1E+00
117	EFWPTSR001A	EFS-MPP-001A (A-EFW PUMP) FAIL TO RUN DURING FIRST HOUR OF OPERATION	2.4E-03	5.8E-03	3.4E+00
118	EPSTMDGAACA	A-AAC TEST & MAINTENANCE	1.2E-02	5.6E-03	1.5E+00
119	RTPSMCART5001D2	RPS-D GROUP-2 SYSTEM MANAGEMENT CARD RT5001D2 FAILURE	2.5E-03	5.5E-03	3.2E+00
120	EPSTMDGAACB	B-AAC TEST & MAINTENANCE	1.2E-02	5.2E-03	1.4E+00
121	RTPBSIFRT5001B2	RPS-B GROUP-2 BUS MASTER CARD FOR RPS COMMUNICATION 5001B2 FAILURE	3.0E-03	5.1E-03	2.7E+00
122	RTPBSIFRT5003B2	RPS-B GROUP-2 BUS MASTER CARD FOR I/O 5003B2 FAILURE	3.0E-03	5.1E-03	2.7E+00
123	RTPBSIFRT5002B2	RPS-B GROUP-2 BUS MASTER CARD FOR ESFAS OUTPUT 5002B2 FAILURE	3.0E-03	5.1E-03	2.7E+00

Table 19.1-63 Basic Events (Hardware Failure, Human Error) RAW for Fire (Sheet 1 of 56)

Rank	Basic Event ID	Basic Event Description	Basic Event Probability	FV Importance	RAW
1	RTPBTSWCCF	BASIC SOFTWARE CCF	1.0E-07	7.7E-03	7.5E+04
2	SGNBTSWCCF2	GROUP-2 APPLICATION SOFTWARE CCF	1.0E-05	1.0E-01	1.0E+04
3	SGNBTHWCCF	DIGITAL I&C HARDWARE CCF	2.1E-06	2.0E-02	9.5E+03
4	EPSCF4CBSC52UAT-ALL	EPS 52/UATA,B,C,D (BREAKER) SPURIOUS CLOSE (CCF)	1.6E-07	1.5E-03	9.4E+03
5	EPSCF4CBSC52RAT-ALL	EPS 52/RATA,B,C,D (BREAKER) SPURIOUS CLOSE (CCF)	1.6E-07	1.5E-03	9.4E+03
6	EFWCF2CVOD008-ALL	EFS-VLV-008A,B FAIL TO OPEN (CCF)	2.4E-06	4.0E-03	1.7E+03
7	EFWCF4CVOD018-ALL	EFS-VLV-018A,B,C,D FAIL TO OPEN (CCF)	1.7E-06	2.8E-03	1.7E+03
8	EFWCF4CVOD012-ALL	EFS-VLV-012A,B,C,D FAIL TO OPEN (CCF)	1.7E-06	2.8E-03	1.7E+03
9	RTPCF4ICYRRT7001-ALL	SG WATER LEVEL SENSOR (NARROW RANGE) CCF	1.4E-06	2.3E-03	1.7E+03
10	EFWCF4MVFC017-ALL	EFS-MOV-017A,B,C,D FAIL TO CONTROL (CCF)	8.5E-07	1.4E-03	1.7E+03
11	EFWCF4MVFC017-123	EFS-MOV-017A,B,D FAIL TO CONTROL (CCF)	2.8E-07	4.7E-04	1.7E+03
12	EFWCF4MVFC017-124	EFS-MOV-017A,C,D FAIL TO CONTROL (CCF)	2.8E-07	4.7E-04	1.7E+03

Table 19.1-63 Basic Events (Hardware Failure, Human Error) RAW for Fire (Sheet 2 of 56)

Rank	Basic Event ID	Basic Event Description	Basic Event Probability	FV Importance	RAW
13	EFWCF4MVFC017-234	EFS-MOV-017A,B,C FAIL TO CONTROL (CCF)	2.8E-07	4.7E-04	1.7E+03
14	EFWCF4MVFC017-134	EFS-MOV-017B,C,D FAIL TO CONTROL (CCF)	2.8E-07	4.7E-04	1.7E+03
15	EFWXVEL006A	EFS-VLV-006A EXTERNAL LEAK LARGE	7.2E-08	1.2E-04	1.6E+03
16	EFWXVEL006B	EFS-VLV-006B EXTERNAL LEAK LARGE	7.2E-08	1.2E-04	1.6E+03
17	EFWCF4CVOD018-124	EFS-VLV-018A,B,C FAIL TO OPEN (CCF)	6.2E-08	1.0E-04	1.6E+03
18	EFWCF4CVOD018-123	EFS-VLV-018B,C,D FAIL TO OPEN (CCF)	6.2E-08	1.0E-04	1.6E+03
19	EFWCF4CVOD018-134	EFS-VLV-018A,B,D FAIL TO OPEN (CCF)	6.2E-08	1.0E-04	1.6E+03
20	EFWCF4CVOD018-234	EFS-VLV-018A,C,D FAIL TO OPEN (CCF)	6.2E-08	1.0E-04	1.6E+03
21	EPSCBFO52RAT-ACD	EPS 52/RATA,C,D (BREAKER) FAIL TO OPEN (CCF)	5.2E-06	3.6E-03	6.9E+02
22	EPSCBFO52UAT-ACD	EPS 52/UATA,C,D (BREAKER) FAIL TO OPEN (CCF)	5.2E-06	3.6E-03	6.9E+02
23	EPSCF4CBSO52LC-ALL	EPS 52/LCA,B,C,D (BREAKER) SPURIOUS OPEN (CCF)	1.6E-07	7.2E-05	4.6E+02
24	EPSCF4CBSO52STH-ALL	EPS 52/STHA,B,C,D (BREAKER) SPURIOUS OPEN (CCF)	1.6E-07	7.2E-05	4.6E+02
25	EPSCF4CBSO52STL-ALL	EPS 52/STLA,B,C,D (BREAKER) SPURIOUS OPEN (CCF)	1.6E-07	7.2E-05	4.6E+02

Table 19.1-63 Basic Events (Hardware Failure, Human Error) RAW for Fire (Sheet 3 of 56)

Rank	Basic Event ID	Basic Event Description	Basic Event Probability	FV Importance	RAW
26	EPSCBFO52UAT-ABD	EPS 52/UATA,B,D (BREAKER) FAIL TO OPEN (CCF)	5.2E-06	2.4E-03	4.6E+02
27	EPSCBFO52RAT-ABD	EPS 52/RATA,B,D (BREAKER) FAIL TO OPEN (CCF)	5.2E-06	2.4E-03	4.6E+02
28	EPSCF4CBSC52RAT-134	EPS 52/RATA,C,D (BREAKER) SPURIOUS CLOSE (CCF)	2.9E-08	1.0E-05	3.6E+02
29	EPSCF4CBSC52UAT-134	EPS 52/UATA,C,D (BREAKER) SPURIOUS CLOSE (CCF)	2.9E-08	1.0E-05	3.6E+02
30	EPSCF4CBSC52UAT-124	EPS 52/UATA,B,D (BREAKER) SPURIOUS CLOSE (CCF)	2.9E-08	7.4E-06	2.5E+02
31	EPSCF4CBSC52RAT-124	EPS 52/RATA,B,D (BREAKER) SPURIOUS CLOSE (CCF)	2.9E-08	7.4E-06	2.5E+02
32	EPSCF4DLLRGTG-ALL	CLASS-1E GTG A,B,C,D FAIL TO RUN AFTER FIRST HOUR OF OPERATION (CCF)	9.9E-04	2.4E-01	2.4E+02
33	EPSCF4DLADGTG-ALL	CLASS-1E GTG A,B,C,D FAIL TO START (CCF)	2.1E-04	5.0E-02	2.4E+02
34	EPSCF4DLSRGTG-ALL	CLASS-1E GTG A,B,C,D FAIL TO RUN DURING FIRST HOUR OF OPERATION (CCF)	1.6E-04	3.7E-02	2.4E+02
35	EPSCF4SEFFGTG-ALL	CLASS-1E GTG A,B,C,D SEQUENCER FAIL TO OPERATE (CCF)	3.8E-05	8.8E-03	2.4E+02
36	EPSCF4CBFC52EPS-ALL	EPS 52/EPSA,B,C,D (BREAKER) FAIL TO CLOSE (CCF)	2.0E-05	4.7E-03	2.4E+02
37	EPSCF4IVFFIBC-ALL	CLASS-1E UPS UNIT A,B,C,D FAIL TO OPERATE (CCF)	1.5E-06	3.3E-04	2.2E+02
38	EPSCF4CBSO72DB-ALL	EPS 72/DBA,B,C,D (BREAKER) SPURIOUS OPEN (CCF)	1.6E-07	3.3E-05	2.1E+02

Table 19.1-63 Basic Events (Hardware Failure, Human Error) RAW for Fire (Sheet 4 of 56)

Rank	Basic Event ID	Basic Event Description	Basic Event Probability	FV Importance	RAW
39	EPSCF4BYFFBAT-ALL	CLASS-1E BATTERY A, B, C, D FAIL TO OPERATE (CCF)	5.0E-08	1.0E-05	2.0E+02
40	EPSCF4CBSO72DB-234	EPS 72/DBA,C,D (BREAKER) SPURIOUS OPEN (CCF)	2.9E-08	5.8E-06	2.0E+02
41	EPSCF4CBSO72DB-124	EPS 72/DBA,B,D (BREAKER) SPURIOUS OPEN (CCF)	2.9E-08	5.8E-06	2.0E+02
42	EPSCF4CBSO72AU-ALL	EPS 72/AUA,B,C,D (BREAKER) SPURIOUS OPEN (CCF)	1.6E-07	3.0E-05	1.9E+02
43	EPSCF4CBSO52EPS-ALL	EPS 52/EPSA,B,C,D (BREAKER) SPURIOUS OPEN (CCF)	1.6E-07	3.0E-05	1.9E+02
44	EPSCF4CBSO52UA-ALL	EPS 52/UAA,B,C,D (BREAKER) SPURIOUS OPEN (CCF)	1.6E-07	3.0E-05	1.9E+02
45	MSRCF4AVCD515-ALL	MSS-SMV-515A,B,C,D FAIL TO CLOSE (CCF)	1.8E-04	3.3E-02	1.9E+02
46	MSRCF4AVCD515-12	MSS-SMV-515B,C FAIL TO CLOSE (CCF)	5.2E-05	9.9E-03	1.9E+02
47	MSRCF4AVCD515-24	MSS-SMV-515B,D FAIL TO CLOSE (CCF)	5.2E-05	9.9E-03	1.9E+02
48	MSRCF4AVCD515-34	MSS-SMV-515A,D FAIL TO CLOSE (CCF)	5.2E-05	9.9E-03	1.9E+02
49	MSRCF4AVCD515-23	MSS-SMV-515B,CFAIL TO CLOSE (CCF)	5.2E-05	9.9E-03	1.9E+02
50	MSRCF4AVCD515-13	MSS-SMV-515A,C FAIL TO CLOSE (CCF)	5.2E-05	9.9E-03	1.9E+02
51	MSRCF4AVCD515-14	MSS-SMV-515C,D FAIL TO CLOSE (CCF)	5.2E-05	9.9E-03	1.9E+02

Table 19.1-63 Basic Events (Hardware Failure, Human Error) RAW for Fire (Sheet 5 of 56)

Rank	Basic Event ID	Basic Event Description	Basic Event Probability	FV Importance	RAW
52	MSRCF4AVCD515-134	MSS-SMV-515A,C,D FAIL TO CLOSE (CCF)	2.6E-05	4.9E-03	1.9E+02
53	MSRCF4AVCD515-234	MSS-SMV-515A,B,D FAIL TO CLOSE (CCF)	2.6E-05	4.9E-03	1.9E+02
54	MSRCF4AVCD515-124	MSS-SMV-515B,C,D FAIL TO CLOSE (CCF)	2.6E-05	4.9E-03	1.9E+02
55	MSRCF4AVCD515-123	MSS-SMV-515A,B,C FAIL TO CLOSE (CCF)	2.6E-05	4.9E-03	1.9E+02
56	EPSCF4BYFFBAT-134	CLASS-1E BATTERY A, B, D FAIL TO OPERATE (CCF)	1.2E-08	2.3E-06	1.9E+02
57	EPSCF4BYFFBAT-123	CLASS-1E BATTERY A, C, D FAIL TO OPERATE (CCF)	1.2E-08	2.3E-06	1.9E+02
58	EPSCF4CBSO52STL-234	EPS 52/STLB,C,D (BREAKER) SPURIOUS OPEN (CCF)	2.9E-08	5.3E-06	1.8E+02
59	EPSCF4CBSO52STH-234	EPS 52/STHB,C,D (BREAKER) SPURIOUS OPEN (CCF)	2.9E-08	5.3E-06	1.8E+02
60	EPSCF4CBSO52LC-123	EPS 52/LCB,C,D (BREAKER) SPURIOUS OPEN (CCF)	2.9E-08	5.3E-06	1.8E+02
61	SWSCF4PMYR-FF	EWS-MPP-001A,B,C,D (A,B,C,D-ESW PUMP) FAIL TO RUN (CCF)	1.2E-08	2.0E-06	1.7E+02
62	EPSCBFO52RAT-ALL	EPS 52/RATA,B,C,D (BREAKER) FAIL TO OPEN (CCF)	2.0E-05	3.1E-03	1.5E+02
63	EPSCBFO52UAT-ALL	EPS 52/UATA,B,C,D (BREAKER) FAIL TO OPEN (CCF)	2.0E-05	3.1E-03	1.5E+02
64	HPICF4PMAD001-ALL	SIS-MPP-001A,B,C,D (SI PUMP) FAIL TO START (CCF)	1.1E-04	1.5E-02	1.4E+02

Table 19.1-63 Basic Events (Hardware Failure, Human Error) RAW for Fire (Sheet 6 of 56)

Rank	Basic Event ID	Basic Event Description	Basic Event Probability	FV Importance	RAW
65	RWSCF4SUPR001-ALL	SIS-SST-001A,B,C,D (ESS/CS STRAINER) PLUG DURING OPERATION (CCF)	9.7E-06	1.3E-03	1.3E+02
66	HPICF4PMSR001-ALL	SIS-MPP-001A,B,C,D (SI PUMP) FAIL TO RUN DURING FIRST HOUR OF OPERATION (CCF)	8.5E-06	1.1E-03	1.3E+02
67	HPICF4PMLR001-ALL	SIS-MPP-001A,B,C,D (SI PUMP) FAIL TO RUN AFTER FIRST HOUR OF OPERATION (CCF)	2.9E-06	3.7E-04	1.3E+02
68	EPSCF4CBSO52STL-123	EPS 52/STLA,B,C (BREAKER) SPURIOUS OPEN (CCF)	2.9E-08	3.5E-06	1.2E+02
69	EPSCF4CBSO52STH-123	EPS 52/STHA,B,C (BREAKER) SPURIOUS OPEN (CCF)	2.9E-08	3.5E-06	1.2E+02
70	EPSCF4CBSO52LC-124	EPS 52/LCA,B,C (BREAKER) SPURIOUS OPEN (CCF)	2.9E-08	3.5E-06	1.2E+02
71	HPICF4CVOD012-ALL	SIS-VLV-012A,B,C,D FAIL TO OPEN (CCF)	1.0E-06	1.2E-04	1.2E+02
72	HPICF4CVOD013-ALL	SIS-VLV-013A,B,C,D FAIL TO OPEN (CCF)	1.0E-06	1.2E-04	1.2E+02
73	HPICF4CVOD004-ALL	SIS-VLV-004A,B,C,D FAIL TO OPEN (CCF)	1.0E-06	1.2E-04	1.2E+02
74	HPICF4CVOD010-ALL	SIS-VLV-010A,B,C,D FAIL TO OPEN (CCF)	1.0E-06	1.2E-04	1.2E+02
75	EPSCF4CBSO52STH-124	EPS 52/STHA,C,D (BREAKER) SPURIOUS OPEN (CCF)	2.9E-08	3.0E-06	1.0E+02
76	EPSCF4CBSO52STL-134	EPS 52/STLA,C,D (BREAKER) SPURIOUS OPEN (CCF)	2.9E-08	3.0E-06	1.0E+02
77	RSSCF4MVOD145-ALL	NCS-MOV-145A,B,C,D FAIL TO OPEN (CCF)	8.4E-05	7.9E-03	9.5E+01

Table 19.1-63 Basic Events (Hardware Failure, Human Error) RAW for Fire (Sheet 7 of 56)

Rank	Basic Event ID	Basic Event Description	Basic Event Probability	FV Importance	RAW
78	RSSCF4PMAD001-ALL	RHS-MPP-001A,B,C,D (CS/RHR PUMP) FAIL TO START (CCF)	1.9E-05	1.7E-03	9.3E+01
79	RSSCF4MVOD004-ALL	CSS-MOV-004A,B,C,D FAIL TO OPEN (CCF)	8.4E-05	7.7E-03	9.3E+01
80	RSSCF4PMSR001-ALL	RHS-MPP-001A,B,C,D (CS/RHR PUMP) FAIL TO RUN DURING FIRST HOUR OF OPERATION (CCF)	5.0E-06	4.5E-04	9.1E+01
81	RSSCF4RHPR001-ALL	RHS-MHX-001A,B,C,D (CS/RHR HX) PLUG / FOUL (CCF)	4.8E-06	4.3E-04	9.1E+01
82	SWSCF4PMBD001-R-ALL	EWS-MPP-001A,B,C,D (ESW PUMP) FAIL TO RE-START (CCF)	4.8E-05	4.1E-03	8.7E+01
83	CWSCF4PCBD001-R-ALL	NCS-MPP-001A,B,C,D (CCW PUMP) FAIL TO RE-START (CCF)	2.6E-05	2.2E-03	8.6E+01
84	RSSCF4PMLR001-ALL	RHS-MPP-001A,B,C,D (CS/RHR PUMP) FAIL TO RUN AFTER FIRST HOUR OF OPERATION (CCF)	1.7E-06	1.4E-04	8.4E+01
85	EPSCF4CBSO52STH-34	EPS 52/STHB,D (BREAKER) SPURIOUS OPEN (CCF)	3.4E-08	2.7E-06	8.1E+01
86	EPSCF4CBSO52STL-24	EPS 52/STLB,D (BREAKER) SPURIOUS OPEN (CCF)	3.4E-08	2.7E-06	8.1E+01
87	EPSCF4CBSO52STH-134	EPS 52/STHA,B,D (BREAKER) SPURIOUS OPEN (CCF)	2.9E-08	2.3E-06	8.1E+01
88	EPSCF4CBSO52STL-124	EPS 52/STLA,B,D (BREAKER) SPURIOUS OPEN (CCF)	2.9E-08	2.3E-06	8.1E+01
89	HPICF4PMAD001-123	SIS-MPP-001B,C,D (SI PUMP) FAIL TO START (CCF)	9.5E-06	7.5E-04	8.1E+01
90	RWSCF4SUPR001-123	SIS-SST-001B,C,D (ESS/CS STRAINER) PLUG DURING OPERATION (CCF)	3.7E-06	2.9E-04	8.0E+01

Table 19.1-63 Basic Events (Hardware Failure, Human Error) RAW for Fire (Sheet 8 of 56)

Rank	Basic Event ID	Basic Event Description	Basic Event Probability	FV Importance	RAW
91	HPICF4PMSR001-123	SIS-MPP-001B,C,D (SI PUMP) FAIL TO RUN DURING FIRST HOUR OF OPERATION (CCF)	3.3E-06	2.6E-04	7.9E+01
92	RSSCF4CVOD005-ALL	CSS-VLV-005A,B,C,D FAIL TO OPEN (CCF)	4.3E-07	3.3E-05	7.9E+01
93	RSSCF4CVOD004-ALL	RHS-VLV-004A,B,C,D FAIL TO OPEN (CCF)	4.3E-07	3.3E-05	7.9E+01
94	SGNBTSWCCF1	GROUP-1 APPLICATION SOFTWARE CCF	1.0E-05	7.8E-04	7.9E+01
95	HPICF4PMLR001-123	SIS-MPP-001B,C,D (SI PUMP) FAIL TO RUN AFTER FIRST HOUR OF OPERATION (CCF)	1.1E-06	8.6E-05	7.7E+01
96	RWSPMEL001A	RWS-MPP-001A (A-RWR PUMP) EXTERNAL LEAK LARGE	1.9E-07	1.4E-05	7.3E+01
97	RWSPMEL001B	RWS-MPP-001B (B-RWR PUMP) EXTERNAL LEAK LARGE	1.9E-07	1.4E-05	7.3E+01
98	HPICF4CVOD013-123	SIS-VLV-013B,C,D FAIL TO OPEN (CCF)	2.7E-07	1.9E-05	7.2E+01
99	HPICF4CVOD010-123	SIS-VLV-010B,C,D FAIL TO OPEN (CCF)	2.7E-07	1.9E-05	7.2E+01
100	HPICF4CVOD004-123	SIS-VLV-004B,C,D FAIL TO OPEN (CCF)	2.7E-07	1.9E-05	7.2E+01
101	HPICF4CVOD012-123	SIS-VLV-012B,C,D FAIL TO OPEN (CCF)	2.7E-07	1.9E-05	7.2E+01
102	RSSCF4PMAD001-124	RHS-MPP-001B,C,D (CS/RHR PUMP) FAIL TO START (CCF)	6.3E-06	4.4E-04	7.1E+01
103	RSSCF4PMSR001-123	RHS-MPP-001B,C,D (CS/RHR PUMP) FAIL TO RUN DURING FIRST HOUR OF OPERATION (CCF)	1.7E-06	1.1E-04	6.9E+01

Table 19.1-63 Basic Events (Hardware Failure, Human Error) RAW for Fire (Sheet 9 of 56)

Rank	Basic Event ID	Basic Event Description	Basic Event Probability	FV Importance	RAW
104	RSSCF4MVOD145-123	NCS-MOV-145B,C,D FAIL TO OPEN (CCF)	1.5E-06	9.8E-05	6.8E+01
105	RSSCF4MVOD004-123	CSS-MOV-004B,C,D FAIL TO OPEN (CCF)	1.5E-06	9.8E-05	6.8E+01
106	RWSXVEL103A	SFS-VLV-103A EXTERNAL LEAK LARGE	7.2E-08	4.8E-06	6.8E+01
107	RWSXVEL006A	RWS-VLV-006A EXTERNAL LEAK LARGE	7.2E-08	4.8E-06	6.8E+01
108	RWSXVEL013B	RWS-VLV-013B EXTERNAL LEAK LARGE	7.2E-08	4.8E-06	6.8E+01
109	RWSXVEL024	RWS-VLV-024 EXTERNAL LEAK LARGE	7.2E-08	4.8E-06	6.8E+01
110	RWSXVEL028	SFS-VLV-028 EXTERNAL LEAK LARGE	7.2E-08	4.8E-06	6.8E+01
111	RWSXVEL103B	SFS-VLV-103B EXTERNAL LEAK LARGE	7.2E-08	4.8E-06	6.8E+01
112	RWSXVEL021	RWS-VLV-021 EXTERNAL LEAK LARGE	7.2E-08	4.8E-06	6.8E+01
113	RWSXVEL001	RWS-VLV-001 EXTERNAL LEAK LARGE	7.2E-08	4.8E-06	6.8E+01
114	RWSXVEL066B	NCS-VLV-066B EXTERNAL LEAK LARGE	7.2E-08	4.8E-06	6.8E+01
115	RWSXVEL066A	NCS-VLV-066A EXTERNAL LEAK LARGE	7.2E-08	4.8E-06	6.8E+01
116	RWSXVEL101	RWS-VLV-101 EXTERNAL LEAK LARGE	7.2E-08	4.8E-06	6.8E+01

Table 19.1-63 Basic Events (Hardware Failure, Human Error) RAW for Fire (Sheet 10 of 56)

Rank	Basic Event ID	Basic Event Description	Basic Event Probability	FV Importance	RAW
117	RWSXVEL013A	RWS-VLV-013A EXTERNAL LEAK LARGE	7.2E-08	4.8E-06	6.8E+01
118	RWSXVEL014	RWS-VLV-014 EXTERNAL LEAK LARGE	7.2E-08	4.8E-06	6.8E+01
119	RWSXVEL005	RWS-VLV-005 EXTERNAL LEAK LARGE	7.2E-08	4.8E-06	6.8E+01
120	RWSXVEL006B	RWS-VLV-006B EXTERNAL LEAK LARGE	7.2E-08	4.8E-06	6.8E+01
121	EPSCF4CBSO52STL-13	EPS 52/STLA,C (BREAKER) SPURIOUS OPEN (CCF)	3.4E-08	2.2E-06	6.8E+01
122	EPSCF4CBSO52STH-12	EPS 52/STHA,C (BREAKER) SPURIOUS OPEN (CCF)	3.4E-08	2.2E-06	6.8E+01
123	RTPCF4ICYRRT7001-345	SG WATER LEVEL SENSOR (NARROW RANGE) RT7001C,RT7001D,RT7001A CCF	9.1E-08	6.0E-06	6.7E+01
124	RTPCF4ICYRRT7001-235	SG WATER LEVEL SENSOR (NARROW RANGE) RT7001B,RT7001D,RT7001A CCF	9.1E-08	6.0E-06	6.7E+01
125	RTPCF4ICYRRT7001-234	SG WATER LEVEL SENSOR (NARROW RANGE) RT7001B,RT7001D,RT7001C CCF	9.1E-08	6.0E-06	6.7E+01
126	RTPCF4ICYRRT7001-245	SG WATER LEVEL SENSOR (NARROW RANGE) RT7001B,RT7001C,RT7001A CCF	9.1E-08	6.0E-06	6.7E+01
127	RSSRIEL001A	RHS-MHX-001A (A-CS/RHR HX) TUBE EXTERNAL LEAK LARGE	7.2E-07	4.7E-05	6.6E+01
128	RSSCF4PMLR001-123	RHS-MPP-001B,C,D (CS/RHR PUMP) FAIL TO RUN AFTER FIRST HOUR OF OPERATION (CCF)	5.8E-07	3.7E-05	6.5E+01
129	RSSCF4CVOD004-123	RHS-VLV-004B,C,D FAIL TO OPEN (CCF)	2.2E-07	1.4E-05	6.3E+01

Table 19.1-63 Basic Events (Hardware Failure, Human Error) RAW for Fire (Sheet 11 of 56)

Rank	Basic Event ID	Basic Event Description	Basic Event Probability	FV Importance	RAW
130	RSSCF4CVOD005-123	CSS-VLV-005B,C,D FAIL TO OPEN (CCF)	2.2E-07	1.4E-05	6.3E+01
131	EFWCF4CVOD012-234	EFS-VLV-012A,C,D FAIL TO OPEN (CCF)	6.2E-08	3.8E-06	6.2E+01
132	HPIPMEL001A	SIS-MPP-001A (A-SI PUMP) EXTERNAL LEAK LARGE	1.9E-07	1.2E-05	6.1E+01
133	RSSPMEL001A	RHS-MPP-001A (A-CS/RHR PUMP) EXTERNAL LEAK LARGE	1.9E-07	1.2E-05	6.1E+01
134	PZRCF2MVOD117-ALL	RCS-MOV-117A,B FAIL TO OPEN (CCF)	1.3E-04	7.4E-03	6.0E+01
135	SWSCF4CVOD602-R-ALL	EWS-VLV-602A,B,C,D FAIL TO RE-OPEN (CCF)	1.5E-07	8.5E-06	5.8E+01
136	SWSCF4CVOD502-R-ALL	EWS-VLV-502A,B,C,D FAIL TO RE-OPEN (CCF)	1.5E-07	8.5E-06	5.8E+01
137	CWSCF4CVOD016-R-ALL	NCS-VLV-016AB,C,D FAIL TO RE-OPEN (CCF)	1.5E-07	8.5E-06	5.8E+01
138	RSSXVEL002A	CSS-VLV-002A EXTERNAL LEAK LARGE	7.2E-08	4.0E-06	5.6E+01
139	RSSXVEL034A	RHS-VLV-034A EXTERNAL LEAK LARGE	7.2E-08	4.0E-06	5.6E+01
140	RSSXVEL013A	RHS-VLV-013A EXTERNAL LEAK LARGE	7.2E-08	4.0E-06	5.6E+01
141	RSSXVEL031A	RHS-VLV-031A EXTERNAL LEAK LARGE	7.2E-08	4.0E-06	5.6E+01
142	RWSTNEL001	RWS-MCP-001 (RWSP) EXTERNAL LEAK LARGE	4.8E-08	2.6E-06	5.6E+01

Table 19.1-63 Basic Events (Hardware Failure, Human Error) RAW for Fire (Sheet 12 of 56)

Rank	Basic Event ID	Basic Event Description	Basic Event Probability	FV Importance	RAW
143	RWSCVEL012B	RWS-VLV-012B EXTERNAL LEAK LARGE	4.8E-08	2.6E-06	5.6E+01
144	RWSCVEL012A	RWS-VLV-012A EXTERNAL LEAK LARGE	4.8E-08	2.6E-06	5.6E+01
145	RWSCVEL037	LMS-VLV-037 EXTERNAL LEAK LARGE	4.8E-08	2.6E-06	5.6E+01
146	RWSCVEL065B	NCS-VLV-065B EXTERNAL LEAK LARGE	4.8E-08	2.6E-06	5.6E+01
147	RWSCVEL027	SFS-VLV-027 EXTERNAL LEAK LARGE	4.8E-08	2.6E-06	5.6E+01
148	RWSCVEL023	RWS-VLV-023 EXTERNAL LEAK LARGE	4.8E-08	2.6E-06	5.6E+01
149	RWSCVEL065A	NCS-VLV-065A EXTERNAL LEAK LARGE	4.8E-08	2.6E-06	5.6E+01
150	CWSCF4RHPR-FF	NCS-MHX-001A,B,C,D (A,B,C,D-CCW HX) PLUG / FOUL (CCF)	3.6E-08	2.0E-06	5.6E+01
151	HPIMVEL001D	SIS-MOV-001D EXTERNAL LEAK LARGE	2.4E-08	1.3E-06	5.6E+01
152	HPIMVEL001C	SIS-MOV-001C EXTERNAL LEAK LARGE	2.4E-08	1.3E-06	5.6E+01
153	RSSMVELCSS001D	CSS-MOV-001D EXTERNAL LEAK LARGE	2.4E-08	1.3E-06	5.6E+01
154	HPIMVEL001B	SIS-MOV-001B EXTERNAL LEAK LARGE	2.4E-08	1.3E-06	5.6E+01
155	RSSMVELCSS001A	CSS-MOV-001A EXTERNAL LEAK LARGE	2.4E-08	1.3E-06	5.6E+01

Table 19.1-63 Basic Events (Hardware Failure, Human Error) RAW for Fire (Sheet 13 of 56)

Rank	Basic Event ID	Basic Event Description	Basic Event Probability	FV Importance	RAW
156	HPIMVEL001A	SIS-MOV-001A EXTERNAL LEAK LARGE	2.4E-08	1.3E-06	5.6E+01
157	RWSMVEL002	RWS-MOV-002 EXTERNAL LEAK LARGE	2.4E-08	1.3E-06	5.6E+01
158	RSSMVELCSS001C	CSS-MOV-001C EXTERNAL LEAK LARGE	2.4E-08	1.3E-06	5.6E+01
159	RWSMVEL004	RWS-MOV-004 EXTERNAL LEAK LARGE	2.4E-08	1.3E-06	5.6E+01
160	RSSMVELCSS001B	CSS-MOV-001B EXTERNAL LEAK LARGE	2.4E-08	1.3E-06	5.6E+01
161	HPICF4PMAD001-234	SIS-MPP-001A,C,D (SI PUMP) FAIL TO START (CCF)	9.5E-06	5.2E-04	5.5E+01
162	RSSCF4PMAD001-123	RHS-MPP-001A,C,D (CS/RHR PUMP) FAIL TO START (CCF)	6.3E-06	3.4E-04	5.5E+01
163	RSSCF4PMAD001-12	RHS-MPP-001C,D (CS/RHR PUMP) FAIL TO START (CCF)	1.3E-05	6.7E-04	5.4E+01
164	HPICF4PMAD001-23	SIS-MPP-001C,D (SI PUMP) FAIL TO START (CCF)	2.2E-05	1.1E-03	5.4E+01
165	RWSCF4SUPR001-234	SIS-SST-001A,C,D (ESS/CS STRAINER) PLUG DURING OPERATION (CCF)	3.7E-06	1.9E-04	5.4E+01
166	RSSCF4MVOD004-23	CSS-MOV-004C,D FAIL TO OPEN (CCF)	5.7E-06	3.0E-04	5.4E+01
167	RSSCF4MVOD145-23	NCS-MOV-145C,D FAIL TO OPEN (CCF)	5.7E-06	3.0E-04	5.4E+01
168	HPICF4PMSR001-234	SIS-MPP-001A,C,D (SI PUMP) FAIL TO RUN DURING FIRST HOUR OF OPERATION (CCF)	3.3E-06	1.7E-04	5.3E+01

Table 19.1-63 Basic Events (Hardware Failure, Human Error) RAW for Fire (Sheet 14 of 56)

Rank	Basic Event ID	Basic Event Description	Basic Event Probability	FV Importance	RAW
169	RSSCF4PMSR001-23	RHS-MPP-001C,D (CS/RHR PUMP) FAIL TO RUN DURING FIRST HOUR OF OPERATION (CCF)	3.3E-06	1.7E-04	5.3E+01
170	RWSCF4SUPR001-23	SIS-SST-001C,D (ESS/CS STRAINER) PLUG DURING OPERATION (CCF)	3.0E-06	1.6E-04	5.3E+01
171	HPICF4PMSR001-23	SIS-MPP-001C,D (SI PUMP) FAIL TO RUN DURING FIRST HOUR OF OPERATION (CCF)	3.6E-06	1.9E-04	5.3E+01
172	RSSCF4PMSR001-234	RHS-MPP-001A,C,D (CS/RHR PUMP) FAIL TO RUN DURING FIRST HOUR OF OPERATION (CCF)	1.7E-06	8.6E-05	5.2E+01
173	RSSCF4MVOD004-234	CSS-MOV-004A,C,D FAIL TO OPEN (CCF)	1.5E-06	7.4E-05	5.2E+01
174	RSSCF4MVOD145-234	NCS-MOV-145A,C,D FAIL TO OPEN (CCF)	1.5E-06	7.4E-05	5.2E+01
175	HPICF4PMLR001-23	SIS-MPP-001C,D (SI PUMP) FAIL TO RUN AFTER FIRST HOUR OF OPERATION (CCF)	1.2E-06	6.3E-05	5.2E+01
176	RSSCF4PMLR001-23	RHS-MPP-001C,D (CS/RHR PUMP) FAIL TO RUN AFTER FIRST HOUR OF OPERATION (CCF)	1.2E-06	5.8E-05	5.1E+01
177	HPICF4PMLR001-234	SIS-MPP-001A,C,D (SI PUMP) FAIL TO RUN AFTER FIRST HOUR OF OPERATION (CCF)	1.1E-06	5.7E-05	5.1E+01
178	RSSRIEL001B	RHS-MHX-001B (B-CS/RHR HX) TUBE EXTERNAL LEAK LARGE	7.2E-07	3.5E-05	5.0E+01
179	RSSCF4PMLR001-234	RHS-MPP-001A,C,D (CS/RHR PUMP) FAIL TO RUN AFTER FIRST HOUR OF OPERATION (CCF)	5.8E-07	2.8E-05	5.0E+01
180	HPICF4CVOD013-234	SIS-VLV-013A,C,D FAIL TO OPEN (CCF)	2.7E-07	1.3E-05	4.9E+01
181	HPICF4CVOD004-234	SIS-VLV-004A,C,D FAIL TO OPEN (CCF)	2.7E-07	1.3E-05	4.9E+01

Table 19.1-63 Basic Events (Hardware Failure, Human Error) RAW for Fire (Sheet 15 of 56)

Rank	Basic Event ID	Basic Event Description	Basic Event Probability	FV Importance	RAW
182	HPICF4CVOD012-234	SIS-VLV-012A,C,D FAIL TO OPEN (CCF)	2.7E-07	1.3E-05	4.9E+01
183	HPICF4CVOD010-234	SIS-VLV-010A,C,D FAIL TO OPEN (CCF)	2.7E-07	1.3E-05	4.9E+01
184	RSSCF4CVOD004-234	RHS-VLV-004A,C,D FAIL TO OPEN (CCF)	2.2E-07	1.1E-05	4.9E+01
185	RSSCF4CVOD005-234	CSS-VLV-005A,C,D FAIL TO OPEN (CCF)	2.2E-07	1.1E-05	4.9E+01
186	RSSCF4CVOD005-23	CSS-VLV-005C,D FAIL TO OPEN (CCF)	2.0E-07	9.7E-06	4.9E+01
187	RSSCF4CVOD004-23	RHS-VLV-004C,D FAIL TO OPEN (CCF)	2.0E-07	9.7E-06	4.9E+01
188	HPIPMEL001B	SIS-MPP-001B (B-SI PUMP) EXTERNAL LEAK LARGE	1.9E-07	9.3E-06	4.9E+01
189	RSSPMEL001B	RHS-MPP-001B (B-CS/RHR PUMP) EXTERNAL LEAK LARGE	1.9E-07	9.3E-06	4.9E+01
190	RSSCF4RHPR001-23	RHS-MHX-001C,D (CS/RHR HX) PLUG / FOUL (CCF)	1.7E-07	8.5E-06	4.9E+01
191	HPICF4CVOD004-23	SIS-VLV-004C,D FAIL TO OPEN (CCF)	1.6E-07	7.8E-06	4.9E+01
192	HPICF4CVOD012-23	SIS-VLV-012C,D FAIL TO OPEN (CCF)	1.6E-07	7.8E-06	4.9E+01
193	HPICF4CVOD010-23	SIS-VLV-010C,D FAIL TO OPEN (CCF)	1.6E-07	7.8E-06	4.9E+01
194	HPICF4CVOD013-23	SIS-VLV-013C,D FAIL TO OPEN (CCF)	1.6E-07	7.8E-06	4.9E+01

Table 19.1-63 Basic Events (Hardware Failure, Human Error) RAW for Fire (Sheet 16 of 56)

Rank	Basic Event ID	Basic Event Description	Basic Event Probability	FV Importance	RAW
195	RSSCF4RHPR001-123	RHS-MHX-001B,C,D (CS/RHR HX) PLUG / FOUL (CCF)	6.4E-08	2.9E-06	4.7E+01
196	HPICVEL004A	SIS-VLV-004A EXTERNAL LEAK LARGE	4.8E-08	2.2E-06	4.7E+01
197	RSSCVEL004A	RHS-VLV-004A EXTERNAL LEAK LARGE	4.8E-08	2.2E-06	4.7E+01
198	RSSMVEL021A	RHS-MOV-021A EXTERNAL LEAK LARGE	2.4E-08	1.1E-06	4.7E+01
199	RSSMVEL004A	CSS-MOV-004A EXTERNAL LEAK LARGE	2.4E-08	1.1E-06	4.7E+01
200	HPIMVEL009A	SIS-MOV-009A EXTERNAL LEAK LARGE	2.4E-08	1.1E-06	4.7E+01
201	EFWCF4CVOD012-124	EFS-VLV-012B,C,D FAIL TO OPEN (CCF)	6.2E-08	2.8E-06	4.6E+01
202	EFWCF4CVOD012-123	EFS-VLV-012A,B,C FAIL TO OPEN (CCF)	6.2E-08	2.8E-06	4.6E+01
203	HPIOO02FWBD-S	(HE) FAIL TO OPEN SAFETY DEPRESSURIZATION VALVE	2.6E-03	1.2E-01	4.6E+01
204	EPSCF4CBSO52STL-34	EPS 52/STLC,D (BREAKER) SPURIOUS OPEN (CCF)	3.4E-08	1.5E-06	4.4E+01
205	EPSCF4CBSO52STH-24	EPS 52/STHC,D (BREAKER) SPURIOUS OPEN (CCF)	3.4E-08	1.5E-06	4.4E+01
206	RSSXVEL013B	RHS-VLV-013B EXTERNAL LEAK LARGE	7.2E-08	3.1E-06	4.4E+01
207	RSSXVEL002B	CSS-VLV-002B EXTERNAL LEAK LARGE	7.2E-08	3.1E-06	4.4E+01

Table 19.1-63 Basic Events (Hardware Failure, Human Error) RAW for Fire (Sheet 17 of 56)

Rank	Basic Event ID	Basic Event Description	Basic Event Probability	FV Importance	RAW
208	EFWCF4CVOD012-134	EFS-VLV-012A,B,D FAIL TO OPEN (CCF)	6.2E-08	2.6E-06	4.3E+01
209	EFWCF4MVFC017-34	EFS-MOV-017B,C FAIL TO CONTROL (CCF)	5.6E-07	2.4E-05	4.3E+01
210	EFWCF4MVFC017-13	EFS-MOV-017B,D FAIL TO CONTROL (CCF)	5.6E-07	2.4E-05	4.3E+01
211	EFWCF4CVOD018-12	EFS-VLV-018B,C FAIL TO OPEN (CCF)	2.3E-07	9.0E-06	4.1E+01
212	EFWCF4CVOD018-13	EFS-VLV-018B,D FAIL TO OPEN (CCF)	2.3E-07	9.0E-06	4.1E+01
213	EPSBSFFMVCC	C-CLASS 1E MOV 480V MCC FAILURE	5.8E-06	2.3E-04	4.0E+01
214	EFWCF4MVFC017-12	EFS-MOV-017A,D FAIL TO CONTROL (CCF)	5.6E-07	2.2E-05	3.9E+01
215	EFWCF4MVFC017-24	EFS-MOV-017A,C FAIL TO CONTROL (CCF)	5.6E-07	2.2E-05	3.9E+01
216	EFWCVOD008B	EFS-VLV-008B FAIL TO OPEN	9.6E-06	3.7E-04	3.9E+01
217	RSSCF4RHPR001-234	RHS-MHX-001A,C,D (CS/RHR HX) PLUG / FOUL (CCF)	6.4E-08	2.4E-06	3.8E+01
218	RSSCVEL004B	RHS-VLV-004B EXTERNAL LEAK LARGE	4.8E-08	1.8E-06	3.8E+01
219	HPICVEL004B	SIS-VLV-004B EXTERNAL LEAK LARGE	4.8E-08	1.8E-06	3.8E+01
220	CFACVEL012	CSS-VLV-012 EXTERNAL LEAK LARGE	4.8E-08	1.8E-06	3.8E+01

Table 19.1-63 Basic Events (Hardware Failure, Human Error) RAW for Fire (Sheet 18 of 56)

Rank	Basic Event ID	Basic Event Description	Basic Event Probability	FV Importance	RAW
221	EPSCF4CBSO52LC-23	EPS 52/LCC,D (BREAKER) SPURIOUS OPEN (CCF)	3.4E-08	1.2E-06	3.8E+01
222	EPSCF4CBSO52LC-234	EPS 52/LCA,C,D (BREAKER) SPURIOUS OPEN (CCF)	2.9E-08	1.1E-06	3.8E+01
223	RSSMVEL004B	CSS-MOV-004B EXTERNAL LEAK LARGE	2.4E-08	8.9E-07	3.8E+01
224	RSSMVEL021B	RHS-MOV-021B EXTERNAL LEAK LARGE	2.4E-08	8.9E-07	3.8E+01
225	HPIMVEL009B	SIS-MOV-009B EXTERNAL LEAK LARGE	2.4E-08	8.9E-07	3.8E+01
226	RSSAVEL023	RHS-HCV-023 EXTERNAL LEAK LARGE	2.2E-08	8.0E-07	3.8E+01
227	RSSAVEL021	RHS-FCV-021 EXTERNAL LEAK LARGE	2.2E-08	8.0E-07	3.8E+01
228	EFWCF4CVOD018-34	EFS-VLV-018A,D FAIL TO OPEN (CCF)	2.3E-07	8.3E-06	3.8E+01
229	EFWCF4CVOD018-24	EFS-VLV-018A,C FAIL TO OPEN (CCF)	2.3E-07	8.3E-06	3.8E+01
230	EFWCVOD008A	EFS-VLV-008A FAIL TO OPEN	9.6E-06	3.5E-04	3.8E+01
231	EPSCBFO52RAT-AD	EPS 52/RATA,D (BREAKER) FAIL TO OPEN (CCF)	5.0E-06	1.7E-04	3.6E+01
232	EPSCBFO52UAT-AD	EPS 52/UATA,D (BREAKER) FAIL TO OPEN (CCF)	5.0E-06	1.7E-04	3.6E+01
233	EFWXVPR007B	EFS-VLV-007B PLUG	2.4E-06	8.2E-05	3.5E+01

Table 19.1-63 Basic Events (Hardware Failure, Human Error) RAW for Fire (Sheet 19 of 56)

Rank	Basic Event ID	Basic Event Description	Basic Event Probability	FV Importance	RAW
234	EFWCVPR008B	EFS-VLV-008B PLUG	2.4E-06	8.2E-05	3.5E+01
235	EFWXVPR007A	EFS-VLV-007A PLUG	2.4E-06	8.2E-05	3.5E+01
236	EFWCVPR008A	EFS-VLV-008A PLUG	2.4E-06	8.2E-05	3.5E+01
237	EPSCBFO52UAT-ABC	EPS 52/UATA,B,C (BREAKER) FAIL TO OPEN (CCF)	5.2E-06	1.6E-04	3.2E+01
238	EPSCBFO52RAT-ABC	EPS 52/RATA,B,C (BREAKER) FAIL TO OPEN (CCF)	5.2E-06	1.6E-04	3.2E+01
239	EPSCBFO52UAT-BCD	EPS 52/UATB,C,D (BREAKER) FAIL TO OPEN (CCF)	5.2E-06	1.5E-04	3.1E+01
240	EPSCBFO52RAT-BCD	EPS 52/RATB,C,D (BREAKER) FAIL TO OPEN (CCF)	5.2E-06	1.5E-04	3.1E+01
241	EPSBSFFMVCA1	A-CLASS 1E MOV 480V MCC1 FAILURE	5.8E-06	1.6E-04	2.9E+01
242	EFWCF4CVOD012-24	EFS-VLV-012C,D FAIL TO OPEN (CCF)	2.3E-07	6.1E-06	2.8E+01
243	EFWCF4CVOD012-13	EFS-VLV-012A,B FAIL TO OPEN (CCF)	2.3E-07	6.1E-06	2.8E+01
244	EPSBSFFMVCD	D-CLASS 1E MOV 480V MCC1 FAILURE	5.8E-06	1.3E-04	2.4E+01
245	EFWCF4MVFC017-14	EFS-MOV-017C,D FAIL TO CONTROL (CCF)	5.6E-07	1.3E-05	2.4E+01
246	EFWMVFC017A	EFS-MOV-017A FAIL TO CONTROL	6.9E-05	1.6E-03	2.4E+01

Table 19.1-63 Basic Events (Hardware Failure, Human Error) RAW for Fire (Sheet 20 of 56)

Rank	Basic Event ID	Basic Event Description	Basic Event Probability	FV Importance	RAW
247	EFWMVFC017B	EFS-MOV-017B FAIL TO CONTROL	6.9E-05	1.5E-03	2.4E+01
248	EFWMVFC017D	EFS-MOV-017D FAIL TO CONTROL	6.9E-05	1.5E-03	2.3E+01
249	EFWORPR016	EFS-FE-016 (ORIFICE) PLUG	2.4E-05	5.3E-04	2.3E+01
250	EFWORPR026	EFS-FE-026 (ORIFICE) PLUG	2.4E-05	5.3E-04	2.3E+01
251	EFWMVFC017C	EFS-MOV-017C FAIL TO CONTROL	6.9E-05	1.5E-03	2.3E+01
252	EFWCVOD018A	EFS-VLV-018A FAIL TO OPEN	9.5E-06	2.1E-04	2.3E+01
253	EFWCVOD018B	EFS-VLV-018B FAIL TO OPEN	9.5E-06	2.1E-04	2.3E+01
254	EFWORPR036	EFS-FE-036 (ORIFICE) PLUG	2.4E-05	5.2E-04	2.3E+01
255	EFWORPR046	EFS-FE-046 (ORIFICE) PLUG	2.4E-05	5.2E-04	2.3E+01
256	EPSBSFFMVCB	B-CLASS 1E MOV 480V MCC FAILURE	5.8E-06	1.2E-04	2.3E+01
257	EFWCF4CVOD018-23	EFS-VLV-018C,D FAIL TO OPEN (CCF)	2.3E-07	4.8E-06	2.3E+01
258	EFWMVPR017B	EFS-MOV-017B PLUG	2.4E-06	5.2E-05	2.2E+01
259	EFWMVPR017A	EFS-MOV-017A PLUG	2.4E-06	5.2E-05	2.2E+01

Table 19.1-63 Basic Events (Hardware Failure, Human Error) RAW for Fire (Sheet 21 of 56)

Rank	Basic Event ID	Basic Event Description	Basic Event Probability	FV Importance	RAW
260	EFWCVPR018B	EFS-VLV-018B PLUG	2.4E-06	5.2E-05	2.2E+01
261	EFWMVPR019A	EFS-MOV-019A PLUG	2.4E-06	5.2E-05	2.2E+01
262	EFWMVPR019B	EFS-MOV-019B PLUG	2.4E-06	5.2E-05	2.2E+01
263	EFWCVPR018A	EFS-VLV-018A PLUG	2.4E-06	5.2E-05	2.2E+01
264	EFWCVOD018D	EFS-VLV-018D FAIL TO OPEN	9.5E-06	2.0E-04	2.2E+01
265	EFWCVOD018C	EFS-VLV-018C FAIL TO OPEN	9.5E-06	2.0E-04	2.2E+01
266	EFWXVEL013B	EFS-VLV-013B EXTERNAL LEAK LARGE	7.2E-08	1.5E-06	2.2E+01
267	EFWXVEL013C	EFS-VLV-013C EXTERNAL LEAK LARGE	7.2E-08	1.5E-06	2.2E+01
268	EFWXVEL013D	EFS-VLV-013D EXTERNAL LEAK LARGE	7.2E-08	1.5E-06	2.2E+01
269	EFWXVEL013A	EFS-VLV-013A EXTERNAL LEAK LARGE	7.2E-08	1.5E-06	2.2E+01
270	EFWMVPR017C	EFS-MOV-017C PLUG	2.4E-06	5.1E-05	2.2E+01
271	EFWCVPR018C	EFS-VLV-018C PLUG	2.4E-06	5.1E-05	2.2E+01
272	EFWMVPR019D	EFS-MOV-019D PLUG	2.4E-06	5.1E-05	2.2E+01

Table 19.1-63 Basic Events (Hardware Failure, Human Error) RAW for Fire (Sheet 22 of 56)

Rank	Basic Event ID	Basic Event Description	Basic Event Probability	FV Importance	RAW
273	EFWMVPR019C	EFS-MOV-019C PLUG	2.4E-06	5.1E-05	2.2E+01
274	EFWMVPR017D	EFS-MOV-017D PLUG	2.4E-06	5.1E-05	2.2E+01
275	EFWCVPR018D	EFS-VLV-018D PLUG	2.4E-06	5.1E-05	2.2E+01
276	FA2-205-M11_P	FIRE RESISTANT CEILING FAILURE	1.2E-03	2.5E-02	2.1E+01
277	FA2-202-M11_P	FIRE RESISTANT CEILING FAILURE	1.2E-03	2.5E-02	2.1E+01
278	EFWXVEL026A	EFS-VLV-026A EXTERNAL LEAK LARGE	7.2E-08	1.4E-06	2.1E+01
279	EFWXVEL007B	EFS-VLV-007B EXTERNAL LEAK LARGE	7.2E-08	1.4E-06	2.1E+01
280	EFWXVEL009B	EFS-VLV-009B EXTERNAL LEAK LARGE	7.2E-08	1.4E-06	2.1E+01
281	EFWXVEL026B	EFS-VLV-026B EXTERNAL LEAK LARGE	7.2E-08	1.4E-06	2.1E+01
282	EFWXVEL007A	EFS-VLV-007A EXTERNAL LEAK LARGE	7.2E-08	1.4E-06	2.1E+01
283	EFWXVEL009D	EFS-VLV-009D EXTERNAL LEAK LARGE	7.2E-08	1.4E-06	2.1E+01
284	EFWXVEL009A	EFS-VLV-009A EXTERNAL LEAK LARGE	7.2E-08	1.4E-06	2.1E+01
285	EFWXVEL009C	EFS-VLV-009C EXTERNAL LEAK LARGE	7.2E-08	1.4E-06	2.1E+01

Table 19.1-63 Basic Events (Hardware Failure, Human Error) RAW for Fire (Sheet 23 of 56)

Rank	Basic Event ID	Basic Event Description	Basic Event Probability	FV Importance	RAW
286	EFWMVCM019A	EFS-MOV-019A SPURIOUS CLOSE	9.6E-07	1.9E-05	2.1E+01
287	EFWMVCM019B	EFS-MOV-019B SPURIOUS CLOSE	9.6E-07	1.9E-05	2.1E+01
288	EFWMVCM017B	EFS-MOV-017B SPURIOUS CLOSE	9.6E-07	1.9E-05	2.1E+01
289	EFWMVCM017A	EFS-MOV-017A SPURIOUS CLOSE	9.6E-07	1.9E-05	2.1E+01
290	EFWMVCM017D	EFS-MOV-017D SPURIOUS CLOSE	9.6E-07	1.9E-05	2.1E+01
291	EFWMVCM019D	EFS-MOV-019D SPURIOUS CLOSE	9.6E-07	1.9E-05	2.1E+01
292	EFWMVCM017C	EFS-MOV-017C SPURIOUS CLOSE	9.6E-07	1.9E-05	2.1E+01
293	EFWMVCM019C	EFS-MOV-019C SPURIOUS CLOSE	9.6E-07	1.9E-05	2.1E+01
294	HPICF4PMAD001-124	SIS-MPP-001A,B,C(SI PUMP) FAIL TO START (CCF)	9.5E-06	1.8E-04	2.0E+01
295	RSSCF4PMAD001-134	RHS-MPP-001A,B,C (CS/RHR PUMP) FAIL TO START (CCF)	6.3E-06	1.2E-04	2.0E+01
296	EFWCF4MVFC017-23	EFS-MOV-017A,B FAIL TO CONTROL (CCF)	5.6E-07	1.1E-05	2.0E+01
297	RWSCF4SUPR001-124	SIS-SST-001A,B,C (ESS/CS STRAINER) PLUG DURING OPERATION (CCF)	3.7E-06	6.8E-05	2.0E+01
298	EFWCF4CVOD018-14	EFS-VLV-018A,B FAIL TO OPEN (CCF)	2.3E-07	4.2E-06	1.9E+01

Table 19.1-63 Basic Events (Hardware Failure, Human Error) RAW for Fire (Sheet 24 of 56)

Rank	Basic Event ID	Basic Event Description	Basic Event Probability	FV Importance	RAW
299	HPICF4PMSR001-124	SIS-MPP-001A,B,C (SI PUMP) FAIL TO RUN DURING FIRST HOUR OF OPERATION (CCF)	3.3E-06	5.9E-05	1.9E+01
300	EFWCVEL008B	EFS-VLV-008B EXTERNAL LEAK LARGE	4.8E-08	8.0E-07	1.8E+01
301	EFWCVEL008A	EFS-VLV-008A EXTERNAL LEAK LARGE	4.8E-08	8.0E-07	1.8E+01
302	EFWTNEL001B	EFS-MPT-001B (B-EFW PIT) EXTERNAL LEAK LARGE	4.8E-08	8.0E-07	1.8E+01
303	EFWTNEL001A	EFS-MPT-001A (A-EFW PIT) EXTERNAL LEAK LARGE	4.8E-08	8.0E-07	1.8E+01
304	RSSRIEL001D	RHS-MHX-001D (D-CS/RHR HX) TUBE EXTERNAL LEAK LARGE	7.2E-07	1.2E-05	1.7E+01
305	HPIOO02FWBD	(HE) FAIL TO OPEN SAFETY DEPRESSURIZATION VALVE AND START SAFETY INJECTION PUMP	3.8E-03	6.2E-02	1.7E+01
306	EPSCF4DLLRGTG-234	CLASS-1E GTG A,C,D FAIL TO RUN AFTER FIRST HOUR OF OPERATION (CCF)	2.5E-04	4.0E-03	1.7E+01
307	RSSCF4PMSR001-124	RHS-MPP-001A,B,C (CS/RHR PUMP) FAIL TO RUN DURING FIRST HOUR OF OPERATION (CCF)	1.7E-06	2.7E-05	1.7E+01
308	RSSCF4MVOD004-124	CSS-MOV-004A,B,C FAIL TO OPEN (CCF)	1.5E-06	2.3E-05	1.7E+01
309	RSSCF4MVOD145-124	NCS-MOV-145A,B,C FAIL TO OPEN (CCF)	1.5E-06	2.3E-05	1.7E+01
310	EPSCF2CBSO52LL2-ALL	EPS 52/LLDA,LLDD (BREAKER) SPURIOUS OPEN (CCF)	2.8E-07	4.5E-06	1.7E+01
311	EPSCF2CBSO52LC1-ALL	EPS 52/LCA1,D1 (BREAKER) SPURIOUS CLOSE (CCF)	2.8E-07	4.5E-06	1.7E+01

Table 19.1-63 Basic Events (Hardware Failure, Human Error) RAW for Fire (Sheet 25 of 56)

Rank	Basic Event ID	Basic Event Description	Basic Event Probability	FV Importance	RAW
312	EPSCF2CBSO52LL1-ALL	EPS 52/LLAA,LLAD (BREAKER) SPURIOUS OPEN (CCF)	2.8E-07	4.5E-06	1.7E+01
313	SGNOO04ICVR12	(HE) MISCALIBRATION OF C/V PRESSURE SENSORS A,B,C,D	6.7E-05	1.0E-03	1.7E+01
314	FA2-202-M10_P	FIRE RESISTANT WALL FAILURE	1.2E-03	1.8E-02	1.6E+01
315	HPICF4PMLR001-124	SIS-MPP-001A,B,C (SI PUMP) FAIL TO RUN AFTER FIRST HOUR OF OPERATION (CCF)	1.1E-06	1.7E-05	1.6E+01
316	EPSCF4DLADGTG-134	CLASS-1E GTG A,C,D FAIL TO START (CCF)	5.2E-05	7.9E-04	1.6E+01
317	EFWMVIL017A	EFS-MOV-017A INTERNAL LEAK LARGE	7.2E-08	1.1E-06	1.6E+01
318	EFWMVIL017B	EFS-MOV-017B INTERNAL LEAK LARGE	7.2E-08	1.1E-06	1.6E+01
319	EFWMVIL017D	EFS-MOV-017D INTERNAL LEAK LARGE	7.2E-08	1.1E-06	1.6E+01
320	EFWMVIL017C	EFS-MOV-017C INTERNAL LEAK LARGE	7.2E-08	1.1E-06	1.6E+01
321	EFWCVEL018A	EFS-VLV-018A EXTERNAL LEAK LARGE	4.8E-08	7.2E-07	1.6E+01
322	EFWCVEL012A	EFS-VLV-012A EXTERNAL LEAK LARGE	4.8E-08	7.2E-07	1.6E+01
323	EFWCVEL012D	EFS-VLV-012D EXTERNAL LEAK LARGE	4.8E-08	7.2E-07	1.6E+01
324	EFWCVEL012C	EFS-VLV-012C EXTERNAL LEAK LARGE	4.8E-08	7.2E-07	1.6E+01

Table 19.1-63 Basic Events (Hardware Failure, Human Error) RAW for Fire (Sheet 26 of 56)

Rank	Basic Event ID	Basic Event Description	Basic Event Probability	FV Importance	RAW
325	EFWCVEL018C	EFS-VLV-018C EXTERNAL LEAK LARGE	4.8E-08	7.2E-07	1.6E+01
326	EFWCVEL018D	EFS-VLV-018D EXTERNAL LEAK LARGE	4.8E-08	7.2E-07	1.6E+01
327	EFWCVEL012B	EFS-VLV-012B EXTERNAL LEAK LARGE	4.8E-08	7.2E-07	1.6E+01
328	EFWCVEL018B	EFS-VLV-018B EXTERNAL LEAK LARGE	4.8E-08	7.2E-07	1.6E+01
329	EPSBSFFDCCA	A-CLASS 1E DC SWITCHBOARD	5.8E-06	8.6E-05	1.6E+01
330	FA2-205-M10_P	FIRE RESISTANT WALL FAILURE	1.2E-03	1.8E-02	1.6E+01
331	EPSBYFFBATA	A-CLASS 1E BATTERY FAIL TO OPERATE	3.8E-06	5.6E-05	1.6E+01
332	EPSCBSO72DBA	EPS 72/DBA (BREAKER) SPURIOUS OPEN	3.0E-06	4.4E-05	1.6E+01
333	RSSCF4PMLR001-124	RHS-MPP-001A,B,C (CS/RHR PUMP) FAIL TO RUN AFTER FIRST HOUR OF OPERATION (CCF)	5.8E-07	8.4E-06	1.6E+01
334	EPSCF4DLSRGTG-234	CLASS-1E GTG A,C,D FAIL TO RUN DURING FIRST HOUR OF OPERATION (CCF)	3.9E-05	5.7E-04	1.6E+01
335	EPSCF2DLLRAAC-ALL	AAC A,B FAIL TO RUN AFTER FIRST HOUR OF OPERATION (CCF)	1.5E-03	2.1E-02	1.5E+01
336	HPICF4CVOD013-124	SIS-VLV-013A,B,C FAIL TO OPEN (CCF)	2.7E-07	3.7E-06	1.5E+01
337	HPICF4CVOD004-124	SIS-VLV-004A,B,C FAIL TO OPEN (CCF)	2.7E-07	3.7E-06	1.5E+01

Table 19.1-63 Basic Events (Hardware Failure, Human Error) RAW for Fire (Sheet 27 of 56)

Rank	Basic Event ID	Basic Event Description	Basic Event Probability	FV Importance	RAW
338	HPICF4CVOD010-124	SIS-VLV-010A,B,C FAIL TO OPEN (CCF)	2.7E-07	3.7E-06	1.5E+01
339	HPICF4CVOD012-124	SIS-VLV-012A,B,C FAIL TO OPEN (CCF)	2.7E-07	3.7E-06	1.5E+01
340	RSSCF4CVOD005-124	CSS-VLV-005A,B,C FAIL TO OPEN (CCF)	2.2E-07	3.1E-06	1.5E+01
341	RSSCF4CVOD004-124	RHS-VLV-004A,B,C FAIL TO OPEN (CCF)	2.2E-07	3.1E-06	1.5E+01
342	EPSOO02RDG	(HE) FAIL TO CONNECT THE ALTERNATE AC POWER SOURCE TO CLASS 1E BUS	2.1E-02	3.0E-01	1.5E+01
343	EPSCF2DLADAAC-ALL	AAC A,B FAIL TO START (CCF)	3.1E-04	4.2E-03	1.5E+01
344	EPSCF2DLSRAAC-ALL	AAC A,B FAIL TO RUN DURING FIRST HOUR OF OPERATION (CCF)	2.3E-04	3.2E-03	1.5E+01
345	EPSCF2SEFFAAC-ALL	AAC A,B SEQUENCER FAIL TO OPERATE (CCF)	1.4E-04	1.9E-03	1.5E+01
346	EPPBTSWCCF	BO-SIGNAL (TRAIN P1,2) SOFTWARE CCF	1.0E-04	1.4E-03	1.5E+01
347	EPSCF4SEFFGTG-234	CLASS-1E GTG A,C,D SEQUENCER FAIL TO OPERATE (CCF)	1.3E-05	1.7E-04	1.4E+01
348	EPSCF2CBFC52AAC-ALL	EPS 52/AACA,D (BREAKER) FAIL TO CLOSE (CCF)	2.8E-05	3.8E-04	1.4E+01
349	EPSCF2CBFO52EPS-ALL	EPS 52/EPSA,D (BREAKER) FAIL TO OPEN (CCF)	2.8E-05	3.8E-04	1.4E+01
350	EPSCF2CBFC52AAC2-ALL	EPS 52/AACAP,52/AACBP (BREAKER) FAIL TO CLOSE (CCF)	2.8E-05	3.8E-04	1.4E+01

Table 19.1-63 Basic Events (Hardware Failure, Human Error) RAW for Fire (Sheet 28 of 56)

Rank	Basic Event ID	Basic Event Description	Basic Event Probability	FV Importance	RAW
351	EPSCF2CBFC89AAC-ALL	EPS 89/AACA,D (SELECTOR CIRCUIT) FAIL TO CLOSE (CCF)	2.8E-05	3.8E-04	1.4E+01
352	EPSCF4CBSO72DB-24	EPS 72/DBA,D (BREAKER) SPURIOUS OPEN (CCF)	3.4E-08	4.4E-07	1.4E+01
353	EPSCF4CBSO72DB-12	EPS 72/DBA,B (BREAKER) SPURIOUS OPEN (CCF)	3.4E-08	4.4E-07	1.4E+01
354	EPSCF4CBSO72DB-23	EPS 72/DBA,C (BREAKER) SPURIOUS OPEN (CCF)	3.4E-08	4.4E-07	1.4E+01
355	EPSCF4CBSO72DB-123	EPS 72/DBA,B,C (BREAKER) SPURIOUS OPEN (CCF)	2.9E-08	3.9E-07	1.4E+01
356	EPSCF4BYFFBAT-13	CLASS-1E BATTERY A, D FAIL TO OPERATE (CCF)	1.9E-08	2.5E-07	1.4E+01
357	EPSCF4BYFFBAT-23	CLASS-1E BATTERY A, C FAIL TO OPERATE (CCF)	1.9E-08	2.5E-07	1.4E+01
358	EPSCF4BYFFBAT-34	CLASS-1E BATTERY A, B FAIL TO OPERATE (CCF)	1.9E-08	2.5E-07	1.4E+01
359	EPPBTHWCCF	BO-SIGNAL (TRAIN P1,2) HARDWARE CCF	2.1E-06	2.6E-05	1.3E+01
360	EPSCF4CBFC52EPS-123	EPS 52/EPSA,C,D (BREAKER) FAIL TO CLOSE (CCF)	5.2E-06	6.2E-05	1.3E+01
361	HPIPMEL001D	SIS-MPP-001D (D-SI PUMP) EXTERNAL LEAK LARGE	1.9E-07	2.3E-06	1.3E+01
362	RSSPMEL001D	RHS-MPP-001D (D-CS/RHR PUMP) EXTERNAL LEAK LARGE	1.9E-07	2.3E-06	1.3E+01
363	RSSXVEL002D	CSS-VLV-002D EXTERNAL LEAK LARGE	7.2E-08	8.6E-07	1.3E+01

Table 19.1-63 Basic Events (Hardware Failure, Human Error) RAW for Fire (Sheet 29 of 56)

Rank	Basic Event ID	Basic Event Description	Basic Event Probability	FV Importance	RAW
364	RSSXVEL013D	RHS-VLV-013D EXTERNAL LEAK LARGE	7.2E-08	8.6E-07	1.3E+01
365	RSSXVEL031D	RHS-VLV-031D EXTERNAL LEAK LARGE	7.2E-08	8.6E-07	1.3E+01
366	RSSXVEL034D	RHS-VLV-034D EXTERNAL LEAK LARGE	7.2E-08	8.6E-07	1.3E+01
367	HPICF4PMAD001-12	SIS-MPP-001B,C (SI PUMP) FAIL TO START (CCF)	2.2E-05	2.6E-04	1.3E+01
368	EPSCF4DLLRGTG-124	CLASS-1E GTG A,B,C FAIL TO RUN AFTER FIRST HOUR OF OPERATION (CCF)	2.5E-04	2.8E-03	1.2E+01
369	RWSCF4SUPR001-12	SIS-SST-001B,C (ESS/CS STRAINER) PLUG DURING OPERATION (CCF)	3.0E-06	3.4E-05	1.2E+01
370	HPICF4PMSR001-12	SIS-MPP-001B,C (SI PUMP) FAIL TO RUN DURING FIRST HOUR OF OPERATION (CCF)	3.6E-06	3.9E-05	1.2E+01
371	EPSCF4DLLRGTG-123	CLASS-1E GTG B,C,D FAIL TO RUN AFTER FIRST HOUR OF OPERATION (CCF)	2.5E-04	2.7E-03	1.2E+01
372	SGNCF4ICVR0012-ALL	CONTAINMENT PRESSURE SENSOR CCF	1.3E-06	1.4E-05	1.2E+01
373	EPSCF4DLLRGTG-134	CLASS-1E GTG A,B,D FAIL TO RUN AFTER FIRST HOUR OF OPERATION (CCF)	2.5E-04	2.6E-03	1.2E+01
374	EPSCF4DLADGTG-123	CLASS-1E GTG A,B,C FAIL TO START (CCF)	5.2E-05	5.3E-04	1.1E+01
375	HPICF4PMLR001-12	SIS-MPP-001B,C (SI PUMP) FAIL TO RUN AFTER FIRST HOUR OF OPERATION (CCF)	1.2E-06	1.2E-05	1.1E+01
376	SGNCF4ICVR0012-23	CONTAINMENT PRESSURE SENSOR P10012B,P10012C CCF	8.5E-07	8.5E-06	1.1E+01

Table 19.1-63 Basic Events (Hardware Failure, Human Error) RAW for Fire (Sheet 30 of 56)

Rank	Basic Event ID	Basic Event Description	Basic Event Probability	FV Importance	RAW
377	SGNCF4ICVR0012-123	CONTAINMENT PRESSURE SENSOR P10012A,P10012B,P10012C CCF	4.3E-07	4.2E-06	1.1E+01
378	SGNCF4ICVR0012-234	CONTAINMENT PRESSURE SENSOR P10012B,P10012C,P10012D CCF	4.3E-07	4.2E-06	1.1E+01
379	SGNCF4ICVR0012-124	CONTAINMENT PRESSURE SENSOR P10012A,P10012B,P10012D CCF	4.3E-07	4.2E-06	1.1E+01
380	SGNCF4ICVR0012-134	CONTAINMENT PRESSURE SENSOR P10012A,P10012C,P10012D CCF	4.3E-07	4.2E-06	1.1E+01
381	EPSCF4DLADGTG-234	CLASS-1E GTG B,C,D FAIL TO START (CCF)	5.2E-05	5.1E-04	1.1E+01
382	EPSCF4DLADGTG-124	CLASS-1E GTG A,B,D FAIL TO START (CCF)	5.2E-05	5.0E-04	1.1E+01
383	EFWMVEL017A	EFS-MOV-017A EXTERNAL LEAK LARGE	2.4E-08	2.3E-07	1.0E+01
384	EFWMVEL017D	EFS-MOV-017D EXTERNAL LEAK LARGE	2.4E-08	2.3E-07	1.0E+01
385	EFWMVEL019D	EFS-MOV-019D EXTERNAL LEAK LARGE	2.4E-08	2.3E-07	1.0E+01
386	EFWMVEL019A	EFS-MOV-019A EXTERNAL LEAK LARGE	2.4E-08	2.3E-07	1.0E+01
387	EFWMVEL019B	EFS-MOV-019B EXTERNAL LEAK LARGE	2.4E-08	2.3E-07	1.0E+01
388	EFWMVEL014B	EFS-MOV-014B EXTERNAL LEAK LARGE	2.4E-08	2.3E-07	1.0E+01
389	EFWMVEL014A	EFS-MOV-014A EXTERNAL LEAK LARGE	2.4E-08	2.3E-07	1.0E+01

Table 19.1-63 Basic Events (Hardware Failure, Human Error) RAW for Fire (Sheet 31 of 56)

Rank	Basic Event ID	Basic Event Description	Basic Event Probability	FV Importance	RAW
390	EFWMVEL014C	EFS-MOV-014C EXTERNAL LEAK LARGE	2.4E-08	2.3E-07	1.0E+01
391	EFWMVEL019C	EFS-MOV-019C EXTERNAL LEAK LARGE	2.4E-08	2.3E-07	1.0E+01
392	EFWMVEL017C	EFS-MOV-017C EXTERNAL LEAK LARGE	2.4E-08	2.3E-07	1.0E+01
393	EFWMVEL014D	EFS-MOV-014D EXTERNAL LEAK LARGE	2.4E-08	2.3E-07	1.0E+01
394	EFWMVEL017B	EFS-MOV-017B EXTERNAL LEAK LARGE	2.4E-08	2.3E-07	1.0E+01
395	FA6-101-04-M04_P	FIRE RESISTANT WALL FAILURE	1.2E-03	1.1E-02	1.0E+01
396	EPSCF4DLSRGTG-124	CLASS-1E GTG A,B,C FAIL TO RUN DURING FIRST HOUR OF OPERATION (CCF)	3.9E-05	3.7E-04	1.0E+01
397	PZRMVOD117B	RCS-MOV-117B FAIL TO OPEN	8.7E-04	8.1E-03	1.0E+01
398	FA2-312-M08_P	FIRE RESISTANT FLOOR FAILURE	1.2E-03	1.1E-02	1.0E+01
399	FA2-307-M09_P	FIRE RESISTANT FLOOR FAILURE	1.2E-03	1.1E-02	1.0E+01
400	FA6-101-04-M07_P	FIRE RESISTANT WALL FAILURE	1.2E-03	1.1E-02	1.0E+01
401	EPSCF4DLSRGTG-134	CLASS-1E GTG A,B,D FAIL TO RUN DURING FIRST HOUR OF OPERATION (CCF)	3.9E-05	3.6E-04	1.0E+01
402	HPICF4CVOD004-12	SIS-VLV-004B,C FAIL TO OPEN (CCF)	1.6E-07	1.4E-06	1.0E+01

Table 19.1-63 Basic Events (Hardware Failure, Human Error) RAW for Fire (Sheet 32 of 56)

Rank	Basic Event ID	Basic Event Description	Basic Event Probability	FV Importance	RAW
403	HPICF4CVOD012-12	SIS-VLV-012B,C FAIL TO OPEN (CCF)	1.6E-07	1.4E-06	1.0E+01
404	HPICF4CVOD010-12	SIS-VLV-010B,C FAIL TO OPEN (CCF)	1.6E-07	1.4E-06	1.0E+01
405	HPICF4CVOD013-12	SIS-VLV-013B,C FAIL TO OPEN (CCF)	1.6E-07	1.4E-06	1.0E+01
406	RSSCF4RHPR001-124	RHS-MHX-001A,B,C (CS/RHR HX) PLUG / FOUL (CCF)	6.4E-08	5.7E-07	1.0E+01
407	HPICVEL004D	SIS-VLV-004D EXTERNAL LEAK LARGE	4.8E-08	4.3E-07	1.0E+01
408	RSSCVEL004D	RHS-VLV-004D EXTERNAL LEAK LARGE	4.8E-08	4.3E-07	1.0E+01
409	EPSCF4CBSO52LC-12	EPS 52/LCB,C (BREAKER) SPURIOUS OPEN (CCF)	3.4E-08	3.0E-07	1.0E+01
410	EPSCF4CBSO52STL-23	EPS 52/STLB,C (BREAKER) SPURIOUS OPEN (CCF)	3.4E-08	3.0E-07	1.0E+01
411	EPSCF4CBSO52STH-23	EPS 52/STHB,C (BREAKER) SPURIOUS OPEN (CCF)	3.4E-08	3.0E-07	1.0E+01
412	RSSMVEL004D	CSS-MOV-004D EXTERNAL LEAK LARGE	2.4E-08	2.2E-07	1.0E+01
413	HPIMVEL009D	SIS-MOV-009D EXTERNAL LEAK LARGE	2.4E-08	2.2E-07	1.0E+01
414	RSSMVEL021D	RHS-MOV-021D EXTERNAL LEAK LARGE	2.4E-08	2.2E-07	1.0E+01
415	EPSCF4DLSRGTG-123	CLASS-1E GTG B,C,D FAIL TO RUN DURING FIRST HOUR OF OPERATION (CCF)	3.9E-05	3.5E-04	9.9E+00

Table 19.1-63 Basic Events (Hardware Failure, Human Error) RAW for Fire (Sheet 33 of 56)

Rank	Basic Event ID	Basic Event Description	Basic Event Probability	FV Importance	RAW
416	EPSCF2CBSO89AAC-ALL	EPS 89/AACA,D (SELECTOR CIRCUIT) SPURIOUS OPEN (CCF)	2.8E-07	2.5E-06	9.8E+00
417	EPSCF2CBSC52EPS-ALL	EPS 52/EPSA,D (BREAKER) SPURIOUS CLOSE (CCF)	2.8E-07	2.5E-06	9.8E+00
418	EPSCF2CBSO52AAC-ALL	EPS 52/AACA,D (BREAKER) SPURIOUS OPEN (CCF)	2.8E-07	2.5E-06	9.8E+00
419	EPSCF2CBSO5AAC2-ALL	EPS 52/AACAP,52/AACBP (BREAKER) SPURIOUS OPEN (CCF)	2.8E-07	2.5E-06	9.8E+00
420	EPSCF4SEFFGTG-124	CLASS-1E GTG A,B,C SEQUENCER FAIL TO OPERATE (CCF)	1.3E-05	1.1E-04	9.6E+00
421	EPSCF4SEFFGTG-134	CLASS-1E GTG A,B,D SEQUENCER FAIL TO OPERATE (CCF)	1.3E-05	1.0E-04	9.4E+00
422	EPSTRFF001D	D-CLASS 1E 6.9KV-480V CLASS 1E STATION SERVICE TRANSFORMER FAIL TO OPERATE	8.2E-06	6.7E-05	9.2E+00
423	EPSCF4SEFFGTG-123	CLASS-1E GTG B,C,D SEQUENCER FAIL TO OPERATE (CCF)	1.3E-05	1.0E-04	9.2E+00
424	EPSCF4CBFC52EPS-234	EPS 52/EPSA,B,C (BREAKER) FAIL TO CLOSE (CCF)	5.2E-06	4.0E-05	8.7E+00
425	SWSCF2PMYR001AC-ALL	EWS-MPP-001A,C (ESW PUMP) FAIL TO RUN (CCF)	8.9E-06	6.8E-05	8.6E+00
426	EPSBSFFLCD	D-CLASS 1E 480V LOAD CENTER FAILURE	5.8E-06	4.4E-05	8.6E+00
427	EPSBSFFMCD	D-CLASS 1E 6.9KV SWITCHGEAR FAILURE	5.8E-06	4.4E-05	8.6E+00
428	EPSCF4CBFC52EPS-134	EPS 52/EPSB,C,D (BREAKER) FAIL TO CLOSE (CCF)	5.2E-06	3.8E-05	8.3E+00

Table 19.1-63 Basic Events (Hardware Failure, Human Error) RAW for Fire (Sheet 34 of 56)

Rank	Basic Event ID	Basic Event Description	Basic Event Probability	FV Importance	RAW
429	EPSCF4CBFC52EPS-124	EPS 52/EPSA,B,D (BREAKER) FAIL TO CLOSE (CCF)	5.2E-06	3.7E-05	8.2E+00
430	EFWCF2PTAD001AD-ALL	EFS-MPP-001A,D (EFW PUMP) FAIL TO START (CCF)	4.5E-04	3.2E-03	8.2E+00
431	EPSBSFFLCD1	D1-CLASS 1E 480V LOAD CENTER FAILURE	5.8E-06	3.9E-05	7.7E+00
432	EPSBSFFMCCD1	D1-CLASS 1E 480V MCC FAILURE	5.8E-06	3.9E-05	7.7E+00
433	SWSCF4PMBD001-R-234	EWS-MPP-001A,B,C (ESW PUMP) FAIL TO RE-START (CCF)	1.5E-05	1.0E-04	7.6E+00
434	EPSCBSO52STLD	EPS 52/STLD (BREAKER) SPURIOUS OPEN	3.0E-06	2.0E-05	7.6E+00
435	EPSCBSO52STHD	EPS 52/STHD (BREAKER) SPURIOUS OPEN	3.0E-06	2.0E-05	7.6E+00
436	CWSCF4PCBD001-R-134	NCS-MPP-001A,B,C (CCW PUMP) FAIL TO RE-START (CCF)	8.4E-06	5.5E-05	7.6E+00
437	EPSCF4CBSO52STH-13	EPS 52/STHA,B (BREAKER) SPURIOUS OPEN (CCF)	3.4E-08	2.1E-07	7.4E+00
438	EPSCF4CBSO52STL-12	EPS 52/STLA,B (BREAKER) SPURIOUS OPEN (CCF)	3.4E-08	2.1E-07	7.4E+00
439	EFWCF2PTSR001AD-ALL	EFS-MPP-001A,D (EFW PUMP) FAIL TO RUN DURING FIRST HOUR OF OPERATION (CCF)	1.1E-04	6.9E-04	7.2E+00
440	EFWCF2PTLR001AD-ALL	EFS-MPP-001A,D (EFW PUMP) FAIL TO RUN AFTER FIRST HOUR OF OPERATION (CCF)	7.2E-05	4.2E-04	6.8E+00
441	EPSCBSO52LLAD	EPS 52/LLAD (BREAKER) SPURIOUS OPEN	3.1E-06	1.7E-05	6.7E+00

Table 19.1-63 Basic Events (Hardware Failure, Human Error) RAW for Fire (Sheet 35 of 56)

Rank	Basic Event ID	Basic Event Description	Basic Event Probability	FV Importance	RAW
442	EPSCBSO52LCD1	EPS 52/LCD1 (BREAKER) SPURIOUS OPEN	3.1E-06	1.7E-05	6.7E+00
443	EPSCBSO52LLDD	EPS 52/LLDD (BREAKER) SPURIOUS OPEN	3.1E-06	1.7E-05	6.7E+00
444	PZRMVPR116B	RCS-MOV-116B PLUG	2.4E-06	1.3E-05	6.4E+00
445	PZRMVPR117B	RCS-MOV-117B PLUG	2.4E-06	1.3E-05	6.4E+00
446	SWSCF4PMBD001-R-123	EWS-MPP-001B,C,D (ESW PUMP) FAIL TO RE-START (CCF)	1.5E-05	8.0E-05	6.3E+00
447	CWSCF4PCBD001-R-234	NCS-MPP-001B,C,D (CCW PUMP) FAIL TO RE-START (CCF)	8.4E-06	4.4E-05	6.3E+00
448	EFWCF2MVOD103-ALL	EFS-MOV-103A,D FAIL TO OPEN (CCF)	4.2E-05	2.2E-04	6.3E+00
449	EFWOO01006FIREAB	(HE) FAIL TO CHANGEOVER EFW PIT from B to A	1.7E-02	8.8E-02	6.1E+00
450	SGNCF4ICVR0012-13	CONTAINMENT PRESSURE SENSOR P10012A,P10012C CCF	8.5E-07	4.2E-06	6.0E+00
451	SGNCF4ICVR0012-12	CONTAINMENT PRESSURE SENSOR P10012A,P10012B CCF	8.5E-07	4.2E-06	6.0E+00
452	SGNCF4ICVR0012-24	CONTAINMENT PRESSURE SENSOR P10012B,P10012D CCF	8.5E-07	4.2E-06	6.0E+00
453	SGNCF4ICVR0012-34	CONTAINMENT PRESSURE SENSOR P10012C,P10012D CCF	8.5E-07	4.2E-06	6.0E+00
454	SWSSTPRST001C	EWS-SST-001C (STRAINER) PLUG	1.7E-04	7.9E-04	5.7E+00

Table 19.1-63 Basic Events (Hardware Failure, Human Error) RAW for Fire (Sheet 36 of 56)

Rank	Basic Event ID	Basic Event Description	Basic Event Probability	FV Importance	RAW
455	SWSPMYR001C	EWS-MPP-001C (C-ESW PUMP) FAIL TO RUN	1.1E-04	5.0E-04	5.5E+00
456	EFWCF2PMAD001BC-ALL	EFS-MPP-001B,C (EFW PUMP) FAIL TO START (CCF)	2.2E-04	9.6E-04	5.4E+00
457	FA2-205-M04_P	FIRE RESISTANT DOOR FAILURE	7.4E-03	3.3E-02	5.4E+00
458	EFWXVCD007B	EFS-VLV-007B FAIL TO CLOSE	7.0E-04	3.1E-03	5.4E+00
459	EFWXVOD006B	EFS-VLV-006B FAIL TO OPEN	7.0E-04	3.1E-03	5.4E+00
460	FA2-202-M04_P	FIRE RESISTANT DOOR FAILURE	7.4E-03	3.2E-02	5.2E+00
461	HVACF2AHSR401-ALL	VRS-MAH-401B,C (EFW PUMP AIR HANDLING UNIT) FAIL TO RUN DURING FIRST HOUR OF OPERATION (CCF)	1.2E-04	4.9E-04	5.2E+00
462	VCWCF2CHYR001-ALL	VWS-MEQ-001B,C (ESSENTIAL CHILLER UNIT) FAIL TO RUN (CCF)	1.0E-04	4.2E-04	5.1E+00
463	SWSCF2PMBD001BD-ALL	EWS-MPP-001B,D (ESW PUMP) FAIL TO START (CCF)	1.4E-04	5.6E-04	5.1E+00
464	SWSORPR002C	EWS-SRO-002C (ORIFICE) PLUG	2.4E-05	8.7E-05	4.6E+00
465	SWSFMPR072	EWS-FT-072 (FLOW METER) PLUG	2.4E-05	8.7E-05	4.6E+00
466	HVACF2AHAD401-ALL	VRS-MAH-401B,C (EFW PUMP AIR HANDLING UNIT) FAIL TO START (CCF)	3.8E-05	1.3E-04	4.6E+00
467	RWSSUPR001C	SIS-SST-001C (C-ESS/CS STRAINER) PLUG DURING OPERATION	2.1E-04	7.4E-04	4.5E+00

Table 19.1-63 Basic Events (Hardware Failure, Human Error) RAW for Fire (Sheet 37 of 56)

Rank	Basic Event ID	Basic Event Description	Basic Event Probability	FV Importance	RAW
468	SWSSTPRST003C	EWS-SST-003C (STRAINER) PLUG	1.7E-04	5.8E-04	4.5E+00
469	RSSPMAD001C	RHS-MPP-001C (C-CS/RHR PUMP) FAIL TO START	1.4E-03	4.9E-03	4.4E+00
470	SWSCF4PMBD001-R-124	EWS-MPP-001A,C,D (ESW PUMP) FAIL TO RE-START (CCF)	1.5E-05	5.2E-05	4.4E+00
471	CWSPCYR001C	NCS-MPP-001C (C-CCW PUMP) FAIL TO RUN	6.2E-05	2.1E-04	4.4E+00
472	RSSMVOD004C	CSS-MOV-004C FAIL TO OPEN	9.0E-04	3.0E-03	4.3E+00
473	RSSMVOD145C	NCS-MOV-145C FAIL TO OPEN	9.0E-04	3.0E-03	4.3E+00
474	HPICF4PMAD001-24	SIS-MPP-001A,C (SI PUMP) FAIL TO START (CCF)	2.2E-05	7.0E-05	4.3E+00
475	RSSCF4PMAD001-13	RHS-MPP-001A,C (CS/RHR PUMP) FAIL TO START (CCF)	1.3E-05	4.0E-05	4.2E+00
476	PZRMVOD117A	RCS-MOV-117A FAIL TO OPEN	8.7E-04	2.8E-03	4.2E+00
477	RSSPMSR001C	RHS-MPP-001C (C-CS/RHR PUMP) FAIL TO RUN DURING FIRST HOUR OF OPERATION	3.8E-04	1.2E-03	4.1E+00
478	FA2-205_03	INITIATING EVENT OCCURRENCE PROBABILITY (SLOCA)	3.6E-03	1.1E-02	4.1E+00
479	RSSTMRP001C	RHS-MHX-001C (C-CS/RHR HX) TEST & MAINTENANCE	5.0E-03	1.5E-02	4.1E+00
480	HPIPMAD001C	SIS-MPP-001C (C-SI PUMP) FAIL TO START	1.3E-03	3.9E-03	4.0E+00

Table 19.1-63 Basic Events (Hardware Failure, Human Error) RAW for Fire (Sheet 38 of 56)

Rank	Basic Event ID	Basic Event Description	Basic Event Probability	FV Importance	RAW
481	RSSTMPI001C	RHS-MPP-001C (C-CS/RHR PUMP) TEST & MAINTENANCE	4.0E-03	1.2E-02	4.0E+00
482	EPSCF4IVFFMVI-ALL	MOV INVERTER A1,B,C,D1 FAIL TO OPERATE FAIL TO OPERATE (CCF)	1.5E-06	4.5E-06	4.0E+00
483	CWSCF4PCBD001-R-123	NCS-MPP-001A,C,D (CCW PUMP) FAIL TO RE-START (CCF)	8.4E-06	2.5E-05	4.0E+00
484	PZRMVCM116B	RCS-MOV-116B SPURIOUS CLOSE	9.6E-07	2.8E-06	3.9E+00
485	PZRMVCM117B	RCS-MOV-117B SPURIOUS CLOSE	9.6E-07	2.8E-06	3.9E+00
486	HPITMPI001C	SIS-MPP-001C (C-SI PUMP) TEST & MAINTENANCE	4.0E-03	1.2E-02	3.9E+00
487	CWSORPR042	NCS-FE-042 (ORIFICE) PLUG	2.4E-05	6.9E-05	3.9E+00
488	CWSORPR037	NCS-FE-037 (ORIFICE) PLUG	2.4E-05	6.9E-05	3.9E+00
489	SWSORPR001C	EWS-SRO-001C (ORIFICE) PLUG	2.4E-05	6.9E-05	3.9E+00
490	SWSORPR036	EWS-FE-036 (ORIFICE) PLUG	2.4E-05	6.9E-05	3.9E+00
491	EFWCF2PMSR001BC-ALL	EFS-MPP-001B,C (EFW PUMP) FAIL TO RUN DURING FIRST HOUR OF OPERATION (CCF)	1.7E-05	4.9E-05	3.8E+00
492	RSSPMLR001C	RHS-MPP-001C (C-CS/RHR PUMP) FAIL TO RUN AFTER FIRST HOUR OF OPERATION	1.3E-04	3.7E-04	3.8E+00
493	EFWOO01014	(HE) FAIL TO OPEN EFW TIE-LINE VALVE BETWEEN TRAINS	2.6E-03	7.2E-03	3.8E+00

Table 19.1-63 Basic Events (Hardware Failure, Human Error) RAW for Fire (Sheet 39 of 56)

Rank	Basic Event ID	Basic Event Description	Basic Event Probability	FV Importance	RAW
494	SWSCF2PMYR001BD-ALL	EWS-MPP-001B,D (ESW PUMP) FAIL TO RUN (CCF)	8.9E-06	2.5E-05	3.8E+00
495	HPIPMSR001C	SIS-MPP-001C (C-SI PUMP) FAIL TO RUN DURING FIRST HOUR OF OPERATION	3.7E-04	1.0E-03	3.8E+00
496	RTPNWIFRT5002C2	RPS-C GROUP-2 NETWORK I/F CARD FOR SAFETY BUS RT5002C2 FAILURE	5.2E-03	1.4E-02	3.8E+00
497	RTPNWIFRT5001C2	RPS-C GROUP-2 NETWORK I/F CARD FOR UNIT BUS RT5001C2 FAILURE	5.2E-03	1.4E-02	3.8E+00
498	RTPCPUCRT5001C2	RPS-C GROUP-2 CPU CARD RT5001C2 FAILURE	4.4E-03	1.2E-02	3.7E+00
499	PZRSVCD121	RCS-SRV-121 FAIL TO RE-CLOSE	7.0E-05	1.9E-04	3.7E+00
500	PZRSVCD123	RCS-SRV-123 FAIL TO RE-CLOSE	7.0E-05	1.9E-04	3.7E+00
501	PZRSVCD122	RCS-SRV-122 FAIL TO RE-CLOSE	7.0E-05	1.9E-04	3.7E+00
502	PZRSVCD120	RCS-SRV-120 FAIL TO RE-CLOSE	7.0E-05	1.9E-04	3.7E+00
503	RTPBSIFRT5002C2	RPS-C GROUP-2 BUS MASTER CARD FOR ESFAS OUTPUT 5002C2 FAILURE	3.0E-03	7.9E-03	3.7E+00
504	RTPBSIFRT5001C2	RPS-C GROUP-2 BUS MASTER CARD FOR RPS COMMUNICATION 5001C2 FAILURE	3.0E-03	7.9E-03	3.7E+00
505	RTPBSIFRT5003C2	RPS-C GROUP-2 BUS MASTER CARD FOR I/O 5003C2 FAILURE	3.0E-03	7.9E-03	3.7E+00
506	RTPSMCART5001C2	RPS-C GROUP-2 SYSTEM MANAGEMENT CARD RT5001C2 FAILURE	2.5E-03	6.7E-03	3.7E+00

Table 19.1-63 Basic Events (Hardware Failure, Human Error) RAW for Fire (Sheet 40 of 56)

Rank	Basic Event ID	Basic Event Description	Basic Event Probability	FV Importance	RAW
507	FA6-101-01-M02_P	FIRE RESISTANT DOOR FAILURE	7.4E-03	2.0E-02	3.6E+00
508	HPIPMLR001C	SIS-MPP-001C (C-SI PUMP) FAIL TO RUN AFTER FIRST HOUR OF OPERATION	1.3E-04	3.3E-04	3.6E+00
509	EFWPTAD001A	EFS-MPP-001A (A-EFW PUMP) FAIL TO START	6.5E-03	1.6E-02	3.5E+00
510	CWSCF2PCYR001AC-ALL	NCS-MPP-001A,C (CCW PUMP) FAIL TO RUN (CCF)	5.0E-06	1.2E-05	3.5E+00
511	EFWPTSR001A	EFS-MPP-001A (A-EFW PUMP) FAIL TO RUN DURING FIRST HOUR OF OPERATION	2.4E-03	5.8E-03	3.4E+00
512	EFWPTLR001A	EFS-MPP-001A (A-EFW PUMP) FAIL TO RUN AFTER FIRST HOUR OF OPERATION	1.5E-03	3.7E-03	3.4E+00
513	EPSTRFF001A	A-CLASS 1E 6.9KV-480V CLASS 1E STATION SERVICE TRANSFORMER FAIL TO OPERATE	8.2E-06	2.0E-05	3.4E+00
514	EFWMVOD103A	EFS-MOV-103A FAIL TO OPEN	9.6E-04	2.3E-03	3.4E+00
515	RSSORPR034	RHS-FE-034 (ORIFICE) PLUG	2.4E-05	5.6E-05	3.3E+00
516	RSSORPR054	NCS-FE-054 (ORIFICE) PLUG	2.4E-05	5.6E-05	3.3E+00
517	RSSORPR001C	RHS-SRO-001C (ORIFICE) PLUG	2.4E-05	5.6E-05	3.3E+00
518	RSSORPR062	NCS-FE-062 (ORIFICE) PLUG	2.4E-05	5.6E-05	3.3E+00
519	RSSORPR058	NCS-FE-058 (ORIFICE) PLUG	2.4E-05	5.6E-05	3.3E+00

Table 19.1-63 Basic Events (Hardware Failure, Human Error) RAW for Fire (Sheet 41 of 56)

Rank	Basic Event ID	Basic Event Description	Basic Event Probability	FV Importance	RAW
520	RSSORPR031	RHS-FE-031 (ORIFICE) PLUG	2.4E-05	5.6E-05	3.3E+00
521	RTPRPCART6001C	RPS-C GROUP-2 REPEATER CARD FOR INPUT RT6001C FAILURE	4.1E-04	9.6E-04	3.3E+00
522	EPSTRFF001C	C-CLASS 1E 6.9KV-480V CLASS 1E STATION SERVICE TRANSFORMER FAIL TO OPERATE	8.2E-06	1.9E-05	3.3E+00
523	RSSCF4MVOD004-24	CSS-MOV-004A,C FAIL TO OPEN (CCF)	5.7E-06	1.3E-05	3.3E+00
524	RSSCF4MVOD145-24	NCS-MOV-145B,D FAIL TO OPEN (CCF)	5.7E-06	1.3E-05	3.3E+00
525	RSSCF4PMAD001-14	RHS-MPP-001B,C (CS/RHR PUMP) FAIL TO START (CCF)	1.3E-05	2.9E-05	3.3E+00
526	CWSCF4MVCD020-ALL	NCS-MOV-020A,B,C,D FAIL TO CLOSE (CCF)	1.3E-05	2.8E-05	3.3E+00
527	CWSCF4MVCD007-ALL	NCS-MOV-007A,B,C,D FAIL TO CLOSE (CCF)	1.3E-05	2.8E-05	3.3E+00
528	RTPNWIFRT5002D2	RPS-D GROUP-2 NETWORK I/F CARD FOR SAFETY BUS RT5002D2 FAILURE	5.2E-03	1.2E-02	3.2E+00
529	RTPNWIFRT5001D2	RPS-D GROUP-2 NETWORK I/F CARD FOR UNIT BUS RT5001D2 FAILURE	5.2E-03	1.2E-02	3.2E+00
530	SGNBTSWCCF3	NON-SAFETY (PCMS) APPLICATION SOFTWARE CCF	1.0E-04	2.2E-04	3.2E+00
531	RTPCPUCRT5001D2	RPS-D GROUP-2 CPU CARD RT5001D2 FAILURE	4.4E-03	1.0E-02	3.2E+00
532	EFWTMTA001A	EFS-MPP-001A (A-EFW PUMP) TEST & MAINTENANCE	5.0E-03	1.1E-02	3.2E+00

Table 19.1-63 Basic Events (Hardware Failure, Human Error) RAW for Fire (Sheet 42 of 56)

Rank	Basic Event ID	Basic Event Description	Basic Event Probability	FV Importance	RAW
533	EPSBSFFLCA	A-CLASS 1E 480V LOAD CENTER FAILURE	5.8E-06	1.3E-05	3.2E+00
534	EPSBSFFMCA	A-CLASS 1E 6.9KV SWITCHGEAR FAILURE	5.8E-06	1.3E-05	3.2E+00
535	RTPBSIFRT5003D2	RPS-D GROUP-2 BUS MASTER CARD FOR I/O 5003D2 FAILURE	3.0E-03	6.4E-03	3.2E+00
536	RTPBSIFRT5001D2	RPS-D GROUP-2 BUS MASTER CARD FOR RPS COMMUNICATION 5001D2 FAILURE	3.0E-03	6.4E-03	3.2E+00
537	RTPBSIFRT5002D2	RPS-D GROUP-2 BUS MASTER CARD FOR ESFAS OUTPUT 5002D2 FAILURE	3.0E-03	6.4E-03	3.2E+00
538	RSSRIEL001C	RHS-MHX-001C (C-CS/RHR HX) TUBE EXTERNAL LEAK LARGE	7.2E-07	1.6E-06	3.2E+00
539	RTPSMCART5001D2	RPS-D GROUP-2 SYSTEM MANAGEMENT CARD RT5001D2 FAILURE	2.5E-03	5.5E-03	3.2E+00
540	HPIORPR074	SIS-FE-074 (ORIFICE) PLUG	2.4E-05	5.1E-05	3.1E+00
541	HPIORPR001C	SIS-SRO-001C (ORIFICE) PLUG	2.4E-05	5.1E-05	3.1E+00
542	HPIORPR086	NCS-FE-086 (ORIFICE) PLUG	2.4E-05	5.1E-05	3.1E+00
543	HPIORPR003C	SIS-SRO-003C (ORIFICE) PLUG	2.4E-05	5.1E-05	3.1E+00
544	HPIORPR082	NCS-FE-082 (ORIFICE) PLUG	2.4E-05	5.1E-05	3.1E+00
545	HPIORPR064	SIS-FE-064 (ORIFICE) PLUG	2.4E-05	5.1E-05	3.1E+00

Table 19.1-63 Basic Events (Hardware Failure, Human Error) RAW for Fire (Sheet 43 of 56)

Rank	Basic Event ID	Basic Event Description	Basic Event Probability	FV Importance	RAW
546	EPSBSFFDCCC	C-CLASS 1E DC SWITCHBOARD	5.8E-06	1.2E-05	3.1E+00
547	RWSCF4SUPR001-24	SIS-SST-001A,C (ESS/CS STRAINER) PLUG DURING OPERATION (CCF)	3.0E-06	6.3E-06	3.1E+00
548	EPSBSFFMCC	C-CLASS 1E 6.9KV SWITCHGEAR FAILURE	5.8E-06	1.2E-05	3.1E+00
549	RSSOO01CSP	(HE) FAIL TO START CV SPRAY SYSTEM	5.0E-03	1.0E-02	3.1E+00
550	RSSCF4PMSR001-24	RHS-MPP-001A,C (CS/RHR PUMP) FAIL TO RUN DURING FIRST HOUR OF OPERATION (CCF)	3.3E-06	6.8E-06	3.0E+00
551	EFWCF2PMLR001BC-ALL	EFS-MPP-001B,C (EFW PUMP) FAIL TO RUN AFTER FIRST HOUR OF OPERATION (CCF)	5.9E-06	1.2E-05	3.0E+00
552	SWSCF4PMBD001-R-134	EWS-MPP-001A,B,D (ESW PUMP) FAIL TO RE-START (CCF)	1.5E-05	3.0E-05	3.0E+00
553	EPSBSFFLCC	C-CLASS 1E 480V LOAD CENTER FAILURE	5.8E-06	1.1E-05	2.9E+00
554	EPSBSFFMCCC	C-CLASS 1E 480V MCC FAILURE	5.8E-06	1.1E-05	2.9E+00
555	NCCOO04014	(HE) NCC MISCALIBRATION OF CSS-PT-014	8.0E-04	1.5E-03	2.9E+00
556	RTPRPCART6001D	RPS-D GROUP-2 REPEATER CARD FOR INPUT RT6001D FAILURE	4.1E-04	7.8E-04	2.9E+00
557	VCWCF2PMYR001-ALL	VWS-MPP-001B,C (ESSENTIAL CHILLED WATER PUMP) FAIL TO RUN (CCF)	5.6E-06	1.1E-05	2.9E+00
558	HPICF4PMSR001-24	SIS-MPP-001A,C (SI PUMP) FAIL TO RUN DURING FIRST HOUR OF OPERATION (CCF)	3.6E-06	6.6E-06	2.8E+00

Table 19.1-63 Basic Events (Hardware Failure, Human Error) RAW for Fire (Sheet 44 of 56)

Rank	Basic Event ID	Basic Event Description	Basic Event Probability	FV Importance	RAW
559	EPSBSFFDCCD	D-CLASS 1E DC SWITCHBOARD	5.8E-06	1.1E-05	2.8E+00
560	FA2-202_03	INITIATING EVENT OCCURRENCE PROBABILITY (SLOCA)	3.6E-03	6.6E-03	2.8E+00
561	RTPNWIFRT5002B2	RPS-B GROUP-2 NETWORK I/F CARD FOR SAFETY BUS RT5002B2 FAILURE	5.2E-03	9.4E-03	2.8E+00
562	RTPNWIFRT5001B2	RPS-B GROUP-2 NETWORK I/F CARD FOR UNIT BUS RT5001B2 FAILURE	5.2E-03	9.4E-03	2.8E+00
563	RTPCPUCRT5001B2	RPS-B GROUP-2 CPU CARD RT5001B2 FAILURE	4.4E-03	7.9E-03	2.8E+00
564	EFWMVOD014B	EFS-MOV-014B FAIL TO OPEN	9.1E-04	1.6E-03	2.8E+00
565	EPSBSFFLCA1	A1-CLASS 1E 480V LOAD CENTER FAILURE	5.8E-06	1.0E-05	2.8E+00
566	EPSBSFFMCCA1	A1-CLASS 1E 480V MCC FAILURE	5.8E-06	1.0E-05	2.8E+00
567	SGNOO01S	(HE) FAIL TO START SAFETY INJECTION PUMP BY DAS	5.7E-02	1.1E-01	2.8E+00
568	RTPBSIFRT5001B2	RPS-B GROUP-2 BUS MASTER CARD FOR RPS COMMUNICATION 5001B2 FAILURE	3.0E-03	5.1E-03	2.7E+00
569	RTPBSIFRT5003B2	RPS-B GROUP-2 BUS MASTER CARD FOR I/O 5003B2 FAILURE	3.0E-03	5.1E-03	2.7E+00
570	RTPBSIFRT5002B2	RPS-B GROUP-2 BUS MASTER CARD FOR ESFAS OUTPUT 5002B2 FAILURE	3.0E-03	5.1E-03	2.7E+00
571	RTPSMCART5001B2	RPS-B GROUP-2 SYSTEM MANAGEMENT CARD RT5001B2 FAILURE	2.5E-03	4.3E-03	2.7E+00

Table 19.1-63 Basic Events (Hardware Failure, Human Error) RAW for Fire (Sheet 45 of 56)

Rank	Basic Event ID	Basic Event Description	Basic Event Probability	FV Importance	RAW
572	RTPDASF	DAS FAILURE	1.0E-02	1.7E-02	2.7E+00
573	EPSCBSO52STHC	EPS 52/STHC (BREAKER) SPURIOUS OPEN	3.0E-06	5.1E-06	2.7E+00
574	EPSCBSO52STLC	EPS 52/STLC (BREAKER) SPURIOUS OPEN	3.0E-06	5.1E-06	2.7E+00
575	EPSCBSO52LCC	EPS 52/LCC (BREAKER) SPURIOUS OPEN	3.0E-06	5.1E-06	2.7E+00
576	RSSCVOD005C	CSS-VLV-005C FAIL TO OPEN	1.0E-05	1.7E-05	2.7E+00
577	RSSCVOD004C	RHS-VLV-004C FAIL TO OPEN	1.0E-05	1.7E-05	2.7E+00
578	EPSCBSO52STHA	EPS 52/STHA (BREAKER) SPURIOUS OPEN	3.0E-06	4.9E-06	2.6E+00
579	EPSCBSO52STLA	EPS 52/STLA (BREAKER) SPURIOUS OPEN	3.0E-06	4.9E-06	2.6E+00
580	CWSCF4PCBD001-R-124	NCS-MPP-001A,B,D (CCW PUMP) FAIL TO RE-START (CCF)	8.4E-06	1.4E-05	2.6E+00
581	RSSCF4MVOD004-12	CSS-MOV-004B,C FAIL TO OPEN (CCF)	5.7E-06	8.9E-06	2.6E+00
582	RSSCF4MVOD145-12	NCS-MOV-145B,C FAIL TO OPEN (CCF)	5.7E-06	8.9E-06	2.6E+00
583	SWSTMPE001B	EWS-MPP-001B (B-ESW PUMP) TEST & MAINTENANCE	1.2E-02	1.9E-02	2.6E+00
584	RSSRHPR001C	RHS-MHX-001C (C-CS/RHR HX) PLUG / FOUL	8.9E-06	1.4E-05	2.6E+00

Table 19.1-63 Basic Events (Hardware Failure, Human Error) RAW for Fire (Sheet 46 of 56)

Rank	Basic Event ID	Basic Event Description	Basic Event Probability	FV Importance	RAW
585	HPICVOD013C	SIS-VLV-013C FAIL TO OPEN	9.7E-06	1.5E-05	2.5E+00
586	HPICVOD004C	SIS-VLV-004C FAIL TO OPEN	9.7E-06	1.5E-05	2.5E+00
587	HPICVOD010C	SIS-VLV-010C FAIL TO OPEN	9.7E-06	1.5E-05	2.5E+00
588	HPICVOD012C	SIS-VLV-012C FAIL TO OPEN	9.7E-06	1.5E-05	2.5E+00
589	SWSMVOD503B	EWS-MOV-503B FAIL TO OPEN	1.0E-03	1.5E-03	2.5E+00
590	RTPCF4ICYRRT7001-24	SG WATER LEVEL SENSOR (NARROW RANGE) RT7001B,RT7001C CCF	4.5E-07	6.7E-07	2.5E+00
591	RTPCF4ICYRRT7001-23	SG WATER LEVEL SENSOR (NARROW RANGE) RT7001B,RT7001D CCF	4.5E-07	6.7E-07	2.5E+00
592	RTPCF4ICYRRT7001-25	SG WATER LEVEL SENSOR (NARROW RANGE) RT7001A,RT7001B CCF	4.5E-07	6.7E-07	2.5E+00
593	RTPCF4ICYRRT7001-45	SG WATER LEVEL SENSOR (NARROW RANGE) RT7001A,RT7001C CCF	4.5E-07	6.7E-07	2.5E+00
594	RTPCF4ICYRRT7001-35	SG WATER LEVEL SENSOR (NARROW RANGE) RT7001A,RT7001D CCF	4.5E-07	6.7E-07	2.5E+00
595	RTPCF4ICYRRT7001-34	SG WATER LEVEL SENSOR (NARROW RANGE) RT7001C,RT7001D CCF	4.5E-07	6.7E-07	2.5E+00
596	SWSMVPR503C	EWS-MOV-503C PLUG	2.4E-06	3.5E-06	2.5E+00
597	SWSCVPR502C	EWS-VLV-502C PLUG	2.4E-06	3.5E-06	2.5E+00

Table 19.1-63 Basic Events (Hardware Failure, Human Error) RAW for Fire (Sheet 47 of 56)

Rank	Basic Event ID	Basic Event Description	Basic Event Probability	FV Importance	RAW
598	SWSCVPR602C	EWS-VLV-602C PLUG	2.4E-06	3.5E-06	2.5E+00
599	SWSXVPR601C	EWS-VLV-601C PLUG	2.4E-06	3.5E-06	2.5E+00
600	SWSXVPR508C	EWS-VLV-508C PLUG	2.4E-06	3.5E-06	2.5E+00
601	SWSXVPR506C	EWS-VLV-506C PLUG	2.4E-06	3.5E-06	2.5E+00
602	RSSCF4PMSR001-12	RHS-MPP-001B,C (CS/RHR PUMP) FAIL TO RUN DURING FIRST HOUR OF OPERATION (CCF)	3.3E-06	4.8E-06	2.4E+00
603	RTPRPCART6001B	RPS-B GROUP-2 REPEATER CARD FOR INPUT RT6001B FAILURE	4.1E-04	5.8E-04	2.4E+00
604	HVACF2AHLR401-ALL	VRS-MAH-401B,C (EFW PUMP AIR HANDLING UNIT) FAIL TO RUN AFTER FIRST HOUR OF OPERATION (CCF)	4.3E-06	5.9E-06	2.4E+00
605	CWSCF4MVCD007-123	NCS-MOV-007B,C,D FAIL TO CLOSE (CCF)	4.2E-06	5.7E-06	2.4E+00
606	CWSCF4MVCD020-123	NCS-MOV-020B,C,D FAIL TO CLOSE (CCF)	4.2E-06	5.7E-06	2.4E+00
607	RTPCNVTRPS2ICD	RPS-C GROUP-2 E/O CONVERTER (INPUT FROM RPS-D) FAILURE	5.6E-04	7.6E-04	2.4E+00
608	RTPCNVTRPS2OCD	RPS-C GROUP-2 E/O CONVERTER (OUTPUT TO RPS-D) FAILURE	5.6E-04	7.6E-04	2.4E+00
609	RTPCNVTRPS2IDC	RPS-D GROUP-2 E/O CONVERTER (INPUT FROM RPS-C) FAILURE	5.6E-04	7.6E-04	2.4E+00
610	RTPCNVTRPS2ODC	RPS-D GROUP-2 E/O CONVERTER (OUTPUT TO RPS-C) FAILURE	5.6E-04	7.6E-04	2.4E+00

Table 19.1-63 Basic Events (Hardware Failure, Human Error) RAW for Fire (Sheet 48 of 56)

Rank	Basic Event ID	Basic Event Description	Basic Event Probability	FV Importance	RAW
611	SWSPMBD001B	EWS-MPP-001B (B-ESW PUMP) FAIL TO START	1.9E-03	2.5E-03	2.4E+00
612	SGNPIFD4001B	SLS-B POWER I/F B (DIGITAL PART) FAILURE	2.7E-04	3.6E-04	2.3E+00
613	SWSTMPE001D	EWS-MPP-001D (D-ESW PUMP) TEST & MAINTENANCE	1.2E-02	1.6E-02	2.3E+00
614	CWSCF4MVCD007-23	NCS-MOV-007C,D FAIL TO CLOSE (CCF)	8.3E-06	1.1E-05	2.3E+00
615	CWSCF4MVCD020-23	NCS-MOV-020C,D FAIL TO CLOSE (CCF)	8.3E-06	1.1E-05	2.3E+00
616	CWSTMRC001D	NCS-MHX-001D (D-CCW HX) TEST & MAINTENANCE	7.0E-03	9.3E-03	2.3E+00
617	CWSTMPC001D	NCS-MPP-001D (D-CCW PUMP) TEST & MAINTENANCE	6.0E-03	7.9E-03	2.3E+00
618	CWSCF2PCBD001BD-ALL	NCS-MPP-001B,D (CCW PUMP) FAIL TO START (CCF)	7.5E-05	9.8E-05	2.3E+00
619	NCCIPFF014	CSS-PT-014 FAIL TO OPERATE	2.7E-05	3.5E-05	2.3E+00
620	SWSSTPRST001B	EWS-SST-001B (STRAINER) PLUG	1.7E-04	2.2E-04	2.3E+00
621	SWSPMBD001D	EWS-MPP-001D (D-ESW PUMP) FAIL TO START	1.9E-03	2.3E-03	2.3E+00
622	SGNTMSPP10012C	CONTAINMENT PRESSURE SENSOR P10012C BYPASS FOR REPAIRS	9.9E-03	1.3E-02	2.3E+00
623	SWSMVOD503D	EWS-MOV-503D FAIL TO OPEN	1.0E-03	1.3E-03	2.3E+00

Table 19.1-63 Basic Events (Hardware Failure, Human Error) RAW for Fire (Sheet 49 of 56)

Rank	Basic Event ID	Basic Event Description	Basic Event Probability	FV Importance	RAW
624	EFWPTAD001D	EFS-MPP-001D (D-EFW PUMP) FAIL TO START	6.5E-03	8.2E-03	2.2E+00
625	SWSPMYR001B	EWS-MPP-001B (B-ESW PUMP) FAIL TO RUN	1.1E-04	1.4E-04	2.2E+00
626	CWSPCBD001D	NCS-MPP-001D (D-CCW PUMP) FAIL TO START	1.0E-03	1.3E-03	2.2E+00
627	SGNPIFD4001D	SLS-D POWER I/F D (DIGITAL PART) FAILURE	2.7E-04	3.3E-04	2.2E+00
628	CWSXVPR101C	NCS-VLV-101C PLUG	2.4E-06	2.9E-06	2.2E+00
629	CWSXVPR104C	NCS-VLV-104C PLUG	2.4E-06	2.9E-06	2.2E+00
630	SWSXVPR517C	EWS-VLV-517C PLUG	2.4E-06	2.9E-06	2.2E+00
631	SWSXVPR514C	EWS-VLV-514C PLUG	2.4E-06	2.9E-06	2.2E+00
632	CWSCVPR016C	NCS-VLV-016C PLUG	2.4E-06	2.9E-06	2.2E+00
633	SWSXVPR520C	EWS-VLV-520C PLUG	2.4E-06	2.9E-06	2.2E+00
634	SWSXVPR511C	EWS-VLV-511C PLUG	2.4E-06	2.9E-06	2.2E+00
635	CWSXVPR008C	NCS-VLV-008C PLUG	2.4E-06	2.9E-06	2.2E+00
636	CWSXVPR018C	NCS-VLV-018C PLUG	2.4E-06	2.9E-06	2.2E+00

Table 19.1-63 Basic Events (Hardware Failure, Human Error) RAW for Fire (Sheet 50 of 56)

Rank	Basic Event ID	Basic Event Description	Basic Event Probability	FV Importance	RAW
637	CWSXVPR005C	NCS-VLV-005C PLUG	2.4E-06	2.9E-06	2.2E+00
638	VCWCHBD001B	VWS-MEQ-001B (B-ESSENTIAL CHILLER UNIT) FAIL TO START	1.0E-02	1.2E-02	2.2E+00
639	VCWTMPZ001B	VWS-MPP-001B (B-ESSENTIAL CHILLED WATER PUMP) TEST & MAINTENANCE	8.0E-03	9.7E-03	2.2E+00
640	EFWPTSR001D	EFS-MPP-001D (D-EFW PUMP) FAIL TO RUN DURING FIRST HOUR OF OPERATION	2.4E-03	2.9E-03	2.2E+00
641	EFWCF4MVOD014-ALL	EFS-MOV-014A,B,C,D FAIL TO OPEN (CCF)	2.2E-05	2.7E-05	2.2E+00
642	EPSBYFFBATD	D-CLASS 1E BATTERY FAIL TO OPERATE	3.8E-06	4.5E-06	2.2E+00
643	HVATMAH401C	VRS-MAH-401C (C-EFW PUMP AIR HANDLING UNIT) TEST & MAINTENANCE	2.5E-03	3.0E-03	2.2E+00
644	HVATMAH401B	VRS-MAH-401B (B-EFW PUMP AIR HANDLING UNIT) TEST & MAINTENANCE	2.5E-03	3.0E-03	2.2E+00
645	EPSCBSO52LCA1	EPS 52/LCA1 (BREAKER) SPURIOUS OPEN	3.1E-06	3.6E-06	2.2E+00
646	EPSCBSO52LLDA	EPS 52/LLDA (BREAKER) SPURIOUS OPEN	3.1E-06	3.6E-06	2.2E+00
647	EPSCBSO52LLAA	EPS 52/LLAA (BREAKER) SPURIOUS OPEN	3.1E-06	3.6E-06	2.2E+00
648	SGNICVRP10012C	CONTAINMENT PRESSURE SENSOR P10012C FAILURE	9.7E-05	1.1E-04	2.2E+00
649	HVAAHSR401C	VRS-MAH-401C (C-EFW PUMP AIR HANDLING UNIT) FAIL TO RUN DURING FIRST HOUR OF OPERATION	2.4E-03	2.8E-03	2.2E+00

Table 19.1-63 Basic Events (Hardware Failure, Human Error) RAW for Fire (Sheet 51 of 56)

Rank	Basic Event ID	Basic Event Description	Basic Event Probability	FV Importance	RAW
650	HVAAHSR401B	VRS-MAH-401B (B-EFW PUMP AIR HANDLING UNIT) FAIL TO RUN DURING FIRST HOUR OF OPERATION	2.4E-03	2.8E-03	2.2E+00
651	VCWCHYR001B	VWS-MEQ-001B (B-ESSENTIAL CHILLER UNIT) FAIL TO RUN	2.1E-03	2.4E-03	2.2E+00
652	VCWPMBD001B	VWS-MPP-001B (B-ESSENTIAL CHILLED WATER PUMP) FAIL TO START	2.0E-03	2.3E-03	2.2E+00
653	EFWPTLR001D	EFS-MPP-001D (D-EFW PUMP) FAIL TO RUN AFTER FIRST HOUR OF OPERATION	1.5E-03	1.8E-03	2.2E+00
654	VCWCHYR001C	VWS-MEQ-001C (C-ESSENTIAL CHILLER UNIT) FAIL TO RUN	2.1E-03	2.4E-03	2.2E+00
655	EFWOO01006FIREBA	(HE) FAIL TO CHANGEOVER EFW PIT from A to B	1.7E-02	2.0E-02	2.2E+00
656	EFWPMAD001B	EFS-MPP-001B (B-EFW PUMP) FAIL TO START	1.3E-03	1.5E-03	2.2E+00
657	CWSCF4MVCD007-234	NCS-MOV-007A,C,D FAIL TO CLOSE (CCF)	4.2E-06	4.8E-06	2.1E+00
658	CWSCF4MVCD020-234	NCS-MOV-020A,C,D FAIL TO CLOSE (CCF)	4.2E-06	4.8E-06	2.1E+00
659	SGNST-ISA	MAIN STEAM LINE PRESSURE HIGH/LOW SIGNAL (LOOP A) FAILURE	1.2E-03	1.4E-03	2.1E+00
660	EFWPMAD001C	EFS-MPP-001C (C-EFW PUMP) FAIL TO START	1.3E-03	1.5E-03	2.1E+00
661	EFWMVOD103D	EFS-MOV-103D FAIL TO OPEN	9.6E-04	1.1E-03	2.1E+00
662	MSRAVCD515A	MSS-SMV-515A FAIL TO CLOSE	7.9E-04	9.0E-04	2.1E+00

Table 19.1-63 Basic Events (Hardware Failure, Human Error) RAW for Fire (Sheet 52 of 56)

Rank	Basic Event ID	Basic Event Description	Basic Event Probability	FV Importance	RAW
663	SGNST-ISB	MAIN STEAM LINE PRESSURE HIGH/LOW SIGNAL (LOOP B) FAILURE	1.2E-03	1.4E-03	2.1E+00
664	SGNST-ISC	MAIN STEAM LINE PRESSURE HIGH/LOW SIGNAL (LOOP C) FAILURE	1.2E-03	1.4E-03	2.1E+00
665	SGNST-ISD	MAIN STEAM LINE PRESSURE HIGH/LOW SIGNAL (LOOP D) FAILURE	1.2E-03	1.4E-03	2.1E+00
666	EFWXVIL023A	EFS-VLV-023A INTERNAL LEAK LARGE	1.1E-05	1.2E-05	2.1E+00
667	HVAAHAD401B	VRS-MAH-401B (B-EFW PUMP AIR HANDLING UNIT) FAIL TO START	7.6E-04	8.6E-04	2.1E+00
668	MSRAVCD515B	MSS-SMV-515B FAIL TO CLOSE	7.9E-04	8.9E-04	2.1E+00
669	MSRAVCD515D	MSS-SMV-515D FAIL TO CLOSE	7.9E-04	8.9E-04	2.1E+00
670	MSRAVCD515C	MSS-SMV-515C FAIL TO CLOSE	7.9E-04	8.9E-04	2.1E+00
671	RSSCVPR004C	RHS-VLV-004C PLUG	2.4E-06	2.7E-06	2.1E+00
672	RSSCVPR005C	CSS-VLV-005C PLUG	2.4E-06	2.7E-06	2.1E+00
673	RSSXVPR128C	NCS-VLV-128C PLUG	2.4E-06	2.7E-06	2.1E+00
674	RSSXVPR144C	NCS-VLV-144C PLUG	2.4E-06	2.7E-06	2.1E+00
675	RSSXVPR141C	NCS-VLV-141C PLUG	2.4E-06	2.7E-06	2.1E+00

Table 19.1-63 Basic Events (Hardware Failure, Human Error) RAW for Fire (Sheet 53 of 56)

Rank	Basic Event ID	Basic Event Description	Basic Event Probability	FV Importance	RAW
676	RSSXVPR131C	NCS-VLV-131C PLUG	2.4E-06	2.7E-06	2.1E+00
677	RSSXVPR013C	RHS-VLV-013C PLUG	2.4E-06	2.7E-06	2.1E+00
678	RSSXVPR125C	NCS-VLV-125C PLUG	2.4E-06	2.7E-06	2.1E+00
679	RSSXVPR002C	CSS-VLV-002C PLUG	2.4E-06	2.7E-06	2.1E+00
680	RSSMVPR004C	CSS-MOV-004C PLUG	2.4E-06	2.7E-06	2.1E+00
681	RSSMVPRCSS001C	CSS-MOV-001C PLUG	2.4E-06	2.7E-06	2.1E+00
682	RSSMVPR145C	NCS-MOV-145C PLUG	2.4E-06	2.7E-06	2.1E+00
683	HVAAHAD401C	VRS-MAH-401C (C-EFW PUMP AIR HANDLING UNIT) FAIL TO START	7.6E-04	8.4E-04	2.1E+00
684	SWSSTPRST001D	EWS-SST-001D (STRAINER) PLUG	1.7E-04	1.9E-04	2.1E+00
685	SWSSTPRST003D	EWS-SST-003D (STRAINER) PLUG	1.7E-04	1.9E-04	2.1E+00
686	PZRMVPR117A	RCS-MOV-117A PLUG	2.4E-06	2.6E-06	2.1E+00
687	PZRMVPR116A	RCS-MOV-116A PLUG	2.4E-06	2.6E-06	2.1E+00
688	EFWPMSR001B	EFS-MPP-001B (B-EFW PUMP) FAIL TO RUN DURING FIRST HOUR OF OPERATION	3.8E-04	4.2E-04	2.1E+00

Table 19.1-63 Basic Events (Hardware Failure, Human Error) RAW for Fire (Sheet 54 of 56)

Rank	Basic Event ID	Basic Event Description	Basic Event Probability	FV Importance	RAW
689	EPSCF4DLLRGTG-12	CLASS-1E GTG B,C FAIL TO RUN AFTER FIRST HOUR OF OPERATION (CCF)	2.5E-04	2.8E-04	2.1E+00
690	SWSPMYR001D	EWS-MPP-001D (D-ESW PUMP) FAIL TO RUN	1.1E-04	1.2E-04	2.1E+00
691	EFWCVOD012A	EFS-VLV-012A FAIL TO OPEN	9.5E-06	1.0E-05	2.1E+00
692	EPSCBSO72DBD	EPS 72/DBD (BREAKER) SPURIOUS OPEN	3.0E-06	3.2E-06	2.1E+00
693	EFWPMSR001C	EFS-MPP-001C (C-EFW PUMP) FAIL TO RUN DURING FIRST HOUR OF OPERATION	3.8E-04	4.0E-04	2.1E+00
694	SGNSCAIP10012C	RPS-C GROUP-2 DISTRIBUTION MODULE(CV) FOR INPUT P10012C FAILURE	6.3E-05	6.5E-05	2.0E+00
695	SGNAICAP10012C	RPS-C GROUP-2 A/I(CV) CARD P10012C FAILURE	5.8E-05	6.1E-05	2.0E+00
696	HPIXVPR111C	NCS-VLV-111C PLUG	2.4E-06	2.5E-06	2.0E+00
697	HPICVPR013C	SIS-VLV-013C PLUG	2.4E-06	2.5E-06	2.0E+00
698	HPIMVPR001C	SIS-MOV-001C PLUG	2.4E-06	2.5E-06	2.0E+00
699	HPIXVPR116C	NCS-VLV-116C PLUG	2.4E-06	2.5E-06	2.0E+00
700	HPIMVPR011C	SIS-MOV-011C PLUG	2.4E-06	2.5E-06	2.0E+00
701	HPICVPR004C	SIS-VLV-004C PLUG	2.4E-06	2.5E-06	2.0E+00

Table 19.1-63 Basic Events (Hardware Failure, Human Error) RAW for Fire (Sheet 55 of 56)

Rank	Basic Event ID	Basic Event Description	Basic Event Probability	FV Importance	RAW
702	HPIMVPR009C	SIS-MOV-009C PLUG	2.4E-06	2.5E-06	2.0E+00
703	HPICVPR012C	SIS-VLV-012C PLUG	2.4E-06	2.5E-06	2.0E+00
704	HPICVPR010C	SIS-VLV-010C PLUG	2.4E-06	2.5E-06	2.0E+00
705	HPIXVPR115C	NCS-VLV-115C PLUG	2.4E-06	2.5E-06	2.0E+00
706	HPIXVPR023C	SIS-VLV-023C PLUG	2.4E-06	2.5E-06	2.0E+00
707	HPIXVPR114C	NCS-VLV-114C PLUG	2.4E-06	2.5E-06	2.0E+00
708	HPIXVPR119C	NCS-VLV-119C PLUG	2.4E-06	2.5E-06	2.0E+00
709	EFWXVCD007A	EFS-VLV-007A FAIL TO CLOSE	7.0E-04	7.2E-04	2.0E+00
710	EFWXVOD006A	EFS-VLV-006A FAIL TO OPEN	7.0E-04	7.2E-04	2.0E+00
711	EFWPMLR001B	EFS-MPP-001B (B-EFW PUMP) FAIL TO RUN AFTER FIRST HOUR OF OPERATION	1.3E-04	1.4E-04	2.0E+00
712	EPSBSFFDCCB	B-CLASS 1E DC SWITCHBOARD	5.8E-06	5.9E-06	2.0E+00
713	CWSPCYR001D	NCS-MPP-001D (D-CCW PUMP) FAIL TO RUN	6.2E-05	6.4E-05	2.0E+00
714	VCWPMYR001B	VWS-MPP-001B (B-ESSENTIAL CHILLED WATER PUMP) FAIL TO RUN	1.1E-04	1.2E-04	2.0E+00

Table 19.1-63 Basic Events (Hardware Failure, Human Error) RAW for Fire (Sheet 56 of 56)

Rank	Basic Event ID	Basic Event Description	Basic Event Probability	FV Importance	RAW
715	SGNCBYFRPSBPPCPB	RPS-B GROUP-2 CPU EPS_TRAIN-B POWER MODULE FAILURE	6.5E-03	6.6E-03	2.0E+00

Table 19.1-64 Common Cause Failure FV Importance for Fire

Rank	BASIC EVENT ID	Basic Event Description	Basic Event Probability	FV Importance	RAW
1	EPSCF4DLLRGTG-ALL	CLASS-1E GTG A,B,C,D FAIL TO RUN AFTER FIRST HOUR OF OPERATION (CCF)	9.9E-04	2.4E-01	2.4E+02
2	SGNBTSWCCF2	GROUP-2 APPLICATION SOFTWARE CCF	1.0E-05	1.0E-01	1.0E+04
3	EPSCF4DLADGTG-ALL	CLASS-1E GTG A,B,C,D FAIL TO START (CCF)	2.1E-04	5.0E-02	2.4E+02
4	EPSCF4DLSRGTG-ALL	CLASS-1E GTG A,B,C,D FAIL TO RUN DURING FIRST HOUR OF OPERATION (CCF)	1.6E-04	3.7E-02	2.4E+02
5	MSRCF4AVCD515-ALL	MSS-SMV-515A,B,C,D FAIL TO CLOSE (CCF)	1.8E-04	3.3E-02	1.9E+02
6	EPSCF2DLLRAAC-ALL	AAC A,B FAIL TO RUN AFTER FIRST HOUR OF OPERATION (CCF)	1.5E-03	2.1E-02	1.5E+01
7	SGNBTHWCCF	DIGITAL I&C HARDWARE CCF	2.1E-06	2.0E-02	9.5E+03
8	HPICF4PMAD001-ALL	SIS-MPP-001A,B,C,D (SI PUMP) FAIL TO START (CCF)	1.1E-04	1.5E-02	1.4E+02
9	MSRCF4AVCD515-14	MSS-SMV-515C,D FAIL TO CLOSE (CCF)	5.2E-05	9.9E-03	1.9E+02
10	MSRCF4AVCD515-13	MSS-SMV-515A,C FAIL TO CLOSE (CCF)	5.2E-05	9.9E-03	1.9E+02

Table 19.1-65 Common Cause Failure RAW for Fire

Rank	BASIC EVENT ID	Basic Event Description	Basic Event Probability	FV Importance	RAW
1	RTPBTSWCCF	BASIC SOFTWARE CCF	1.0E-07	7.7E-03	7.5E+04
2	SGNBTSWCCF2	GROUP-2 APPLICATION SOFTWARE CCF	1.0E-05	1.0E-01	1.0E+04
3	SGNBTHWCCF	DIGITAL I&C HARDWARE CCF	2.1E-06	2.0E-02	9.5E+03
4	EPSCF4CBSC52UAT-ALL	EPS 52/UATA,B,C,D (BREAKER) SPURIOUS CLOSE (CCF)	1.6E-07	1.5E-03	9.4E+03
5	EPSCF4CBSC52RAT-ALL	EPS 52/RATA,B,C,D (BREAKER) SPURIOUS CLOSE (CCF)	1.6E-07	1.5E-03	9.4E+03
6	EFWCF2CVOD008-ALL	EFS-VLV-008A,B FAIL TO OPEN (CCF)	2.4E-06	4.0E-03	1.7E+03
7	EFWCF4CVOD012-ALL	EFS-VLV-012A,B,C,D FAIL TO OPEN (CCF)	1.7E-06	2.8E-03	1.7E+03
8	EFWCF4CVOD018-ALL	EFS-VLV-018A,B,C,D FAIL TO OPEN (CCF)	1.7E-06	2.8E-03	1.7E+03
9	RTPCF4ICYRRT7001-ALL	SG WATER LEVEL SENSOR (NARROW RANGE) CCF	1.4E-06	2.3E-03	1.7E+03
10	EFWCF4MVFC017-ALL	EFS-MOV-017A,B,C,D FAIL TO CONTROL (CCF)	8.5E-07	1.4E-03	1.7E+03

Table 19.1-66 Human Error FV Importance for Fire

Rank	BASIC EVENT ID	Basic Event Description	Basic Event Probability	FV Importance	RAW
1	EPSOO02RDG	(HE) FAIL TO CONNECT THE ALTERNATE AC POWER SOURCE TO CLASS 1E BUS	2.1E-02	3.0E-01	1.5E+01
2	HPIOO02FWBD-S	(HE) FAIL TO OPEN SAFETY DEPRESSURIZATION VALVE	2.6E-03	1.2E-01	4.6E+01
3	SGNOO01S	(HE) FAIL TO START SAFETY INJECTION PUMP BY DAS	5.7E-02	1.1E-01	2.8E+00
4	EFWOO01006FIREAB	(HE) FAIL TO CHANGEOVER EFW PIT from B to A	1.7E-02	8.8E-02	6.1E+00
5	HPIOO02FWBD	(HE) FAIL TO OPEN SAFETY DEPRESSURIZATION VALVE AND START SAFETY INJECTION PUMP	3.8E-03	6.2E-02	1.7E+01
6	HPIOO01SDVDAS	(HE) FAIL TO OPEN SAFETY DEPRESSURIZATION VALVE BY DAS	5.7E-02	5.0E-02	1.8E+00
7	EFWOO01006FIREBA	(HE) FAIL TO CHANGEOVER EFW PIT from A to B	1.7E-02	2.0E-02	2.2E+00
8	RSSOO01CSP	(HE) FAIL TO START CV SPRAY SYSTEM	5.0E-03	1.0E-02	3.1E+00
9	HPIOO02FWBD-R	(HE) FAIL TO OPEN SAFETY DEPRESSURIZATION VALVE AND START SAFETY INJECTION PUMP BY RSC	1.0E-01	9.3E-03	1.1E+00
10	EFWOO01014	(HE) FAIL TO OPEN EFW TIE-LINE VALVE BETWEEN TRAINS	2.6E-03	7.2E-03	3.8E+00

Table 19.1-67 Human Error RAW for Fire

Rank	BASIC EVENT ID	Basic Event Description	Basic Event Probability	FV Importance	RAW
1	HPIOO02FWBD-S	(HE) FAIL TO OPEN SAFETY DEPRESSURIZATION VALVE	2.6E-03	1.2E-01	4.6E+01
2	HPIOO02FWBD	(HE) FAIL TO OPEN SAFETY DEPRESSURIZATION VALVE AND START SAFETY INJECTION PUMP	3.8E-03	6.2E-02	1.7E+01
3	SGNOO04ICVR12	(HE) MISCALIBRATION OF C/V PRESSURE SENSORS A,B,C,D	6.7E-05	1.0E-03	1.7E+01
4	EPSOO02RDG	(HE) FAIL TO CONNECT THE ALTERNATE AC POWER SOURCE TO CLASS 1E BUS	2.1E-02	3.0E-01	1.5E+01
5	EFWOO01006FIREAB	(HE) FAIL TO CHANGEOVER EFW PIT from B to A	1.7E-02	8.8E-02	6.1E+00
6	EFWOO01014	(HE) FAIL TO OPEN EFW TIE-LINE VALVE BETWEEN TRAINS	2.6E-03	7.2E-03	3.8E+00
7	RSSOO01CSP	(HE) FAIL TO START CV SPRAY SYSTEM	5.0E-03	1.0E-02	3.1E+00
8	NCCOO04014	(HE) NCC MISCALIBRATION OF CSS-PT-014	8.0E-04	1.5E-03	2.9E+00
9	SGNOO01S	(HE) FAIL TO START SAFETY INJECTION PUMP BY DAS	5.7E-02	1.1E-01	2.8E+00
10	EFWOO01006FIREBA	(HE) FAIL TO CHANGEOVER EFW PIT from A to B	1.7E-02	2.0E-02	2.2E+00

Table 19.1-68 Hardware Single Failure FV Importance for Fire

Rank	BASIC EVENT ID	Basic Event Description	Basic Event Probability	FV Importance	RAW
1	RCP----SEAL	RCP SEAL LOCA	1.0E+00	3.8E-01	1.0E+00
2	FA2-205-M04_P	FIRE RESISTANT DOOR FAILURE	7.4E-03	3.3E-02	5.4E+00
3	FA2-202-M04_P	FIRE RESISTANT DOOR FAILURE	7.4E-03	3.2E-02	5.2E+00
4	FA2-205-M11_P	FIRE RESISTANT CEILING FAILURE	1.2E-03	2.5E-02	2.1E+01
5	FA2-202-M11_P	FIRE RESISTANT CEILING FAILURE	1.2E-03	2.5E-02	2.1E+01
6	FA6-101-01-M02_P	FIRE RESISTANT DOOR FAILURE	7.4E-03	2.0E-02	3.6E+00
7	SWSTMPE001B	EWS-MPP-001B (B-ESW PUMP) TEST & MAINTENANCE	1.2E-02	1.9E-02	2.6E+00
8	FA2-202-M10_P	FIRE RESISTANT WALL FAILURE	1.2E-03	1.8E-02	1.6E+01
9	FA2-205-M10_P	FIRE RESISTANT WALL FAILURE	1.2E-03	1.8E-02	1.6E+01
10	RTPDASF	DAS FAILURE	1.0E-02	1.7E-02	2.7E+00

Table 19.1-69 Hardware Single Failure RAW for Fire

Rank	BASIC EVENT ID	Basic Event Description	Basic Event Probability	FV Importance	RAW
1	EFWXVEL006A	EFS-VLV-006A EXTERNAL LEAK LARGE	7.2E-08	1.2E-04	1.6E+03
2	EFWXVEL006B	EFS-VLV-006B EXTERNAL LEAK LARGE	7.2E-08	1.2E-04	1.6E+03
3	RWSPMEL001A	RWS-MPP-001A (A-RWR PUMP) EXTERNAL LEAK LARGE	1.9E-07	1.4E-05	7.3E+01
4	RWSPMEL001B	RWS-MPP-001B (B-RWR PUMP) EXTERNAL LEAK LARGE	1.9E-07	1.4E-05	7.3E+01
5	RWSXVEL103A	SFS-VLV-103A EXTERNAL LEAK LARGE	7.2E-08	4.8E-06	6.8E+01
6	RWSXVEL006A	RWS-VLV-006A EXTERNAL LEAK LARGE	7.2E-08	4.8E-06	6.8E+01
7	RWSXVEL013B	RWS-VLV-013B EXTERNAL LEAK LARGE	7.2E-08	4.8E-06	6.8E+01
8	RWSXVEL024	RWS-VLV-024 EXTERNAL LEAK LARGE	7.2E-08	4.8E-06	6.8E+01
9	RWSXVEL028	SFS-VLV-028 EXTERNAL LEAK LARGE	7.2E-08	4.8E-06	6.8E+01
10	RWSXVEL103B	SFS-VLV-103B EXTERNAL LEAK LARGE	7.2E-08	4.8E-06	6.8E+01

Table 19.1-70 Internal Flood PRA Dominant Cutsets (Sheet 1 of 70)

Flood Source : FA2-321-01 1st Dominant Scenario of CDF

Categories of loss-of-fluid events : Major Flood

No.	Cut Sets Freq. (/ry)	Percent	Cutsets	Frequency/ Probability	Description
1	4.3E-05	20.3	!16PLOCW_IF	1.0E+00	PARTIAL LOSS OF COMPONENT COOLING WATER
			EFWOO01006AB	1.7E-02	(HE) FAIL TO CHANGEOVER EFW PIT
			HPIOO02FWBD-S	2.6E-03	(HE) FAIL TO OPEN SAFETY DEPRESSURIZATION VALVE
2	5.1E-06	2.4	!16PLOCW_IF	1.0E+00	PARTIAL LOSS OF COMPONENT COOLING WATER
			EFWOO01006AB	1.7E-02	(HE) FAIL TO CHANGEOVER EFW PIT
			RTPNWIFRT5001C2	5.2E-03	RPS-C GROUP-2 NETWORK I/F CARD FOR UNIT BUS RT5001C2 FAILURE
			SGNOO01S	5.7E-02	(HE) FAIL TO START SAFETY INJECTION PUMP BY DAS
3	5.1E-06	2.4	!16PLOCW_IF	1.0E+00	PARTIAL LOSS OF COMPONENT COOLING WATER
			EFWOO01006AB	1.7E-02	(HE) FAIL TO CHANGEOVER EFW PIT
			RTPNWIFRT5002D2	5.2E-03	RPS-D GROUP-2 NETWORK I/F CARD FOR SAFETY BUS RT5002D2 FAILURE
			SGNOO01S	5.7E-02	(HE) FAIL TO START SAFETY INJECTION PUMP BY DAS
4	5.1E-06	2.4	!16PLOCW_IF	1.0E+00	PARTIAL LOSS OF COMPONENT COOLING WATER
			EFWOO01006AB	1.7E-02	(HE) FAIL TO CHANGEOVER EFW PIT
			RTPNWIFRT5002C2	5.2E-03	RPS-C GROUP-2 NETWORK I/F CARD FOR SAFETY BUS RT5002C2 FAILURE
			SGNOO01S	5.7E-02	(HE) FAIL TO START SAFETY INJECTION PUMP BY DAS

Table 19.1-70 Internal Flood PRA Dominant Cutsets (Sheet 2 of 70)

Flood Source : FA2-321-01 1st Dominant Scenario of CDF

Categories of loss-of-fluid events : Major Flood

No.	Cut Sets Freq. (/ry)	Percent	Cutsets	Frequency/ Probability	Description
5	5.1E-06	2.4	!16PLOCW_IF	1.0E+00	PARTIAL LOSS OF COMPONENT COOLING WATER
			EFWOO01006AB	1.7E-02	(HE) FAIL TO CHANGEOVER EFW PIT
			RTPNWIFRT5001D2	5.2E-03	RPS-D GROUP-2 NETWORK I/F CARD FOR UNIT BUS RT5001D2 FAILURE
			SGNOO01S	5.7E-02	(HE) FAIL TO START SAFETY INJECTION PUMP BY DAS
6	4.3E-06	2.0	!16PLOCW_IF	1.0E+00	PARTIAL LOSS OF COMPONENT COOLING WATER
			EFWOO01006AB	1.7E-02	(HE) FAIL TO CHANGEOVER EFW PIT
			RTPCPUCRT5001D2	4.4E-03	RPS-D GROUP-2 CPU CARD RT5001D2 FAILURE
			SGNOO01S	5.7E-02	(HE) FAIL TO START SAFETY INJECTION PUMP BY DAS
7	4.3E-06	2.0	!16PLOCW_IF	1.0E+00	PARTIAL LOSS OF COMPONENT COOLING WATER
			EFWOO01006AB	1.7E-02	(HE) FAIL TO CHANGEOVER EFW PIT
			RTPCPUCRT5001C2	4.4E-03	RPS-C GROUP-2 CPU CARD RT5001C2 FAILURE
			SGNOO01S	5.7E-02	(HE) FAIL TO START SAFETY INJECTION PUMP BY DAS
8	2.9E-06	1.3	!16PLOCW_IF	1.0E+00	PARTIAL LOSS OF COMPONENT COOLING WATER
			EFWOO01006AB	1.7E-02	(HE) FAIL TO CHANGEOVER EFW PIT
			RTPBSIFRT5001C2	3.0E-03	RPS-C GROUP-2 BUS MASTER CARD FOR RPS COMMUNICATION 5001C2 FAILURE
			SGNOO01S	5.7E-02	(HE) FAIL TO START SAFETY INJECTION PUMP BY DAS

Table 19.1-70 Internal Flood PRA Dominant Cutsets (Sheet 3 of 70)

Flood Source : FA2-321-01 1st Dominant Scenario of CDF

Categories of loss-of-fluid events : Major Flood

No.	Cut Sets Freq. (/ry)	Percent	Cutsets	Frequency/ Probability	Description
9	2.9E-06	1.3	!16PLOCW_IF	1.0E+00	PARTIAL LOSS OF COMPONENT COOLING WATER
			EFWOO01006AB	1.7E-02	(HE) FAIL TO CHANGEOVER EFW PIT
			RTPBSIFRT5002D2	3.0E-03	RPS-D GROUP-2 BUS MASTER CARD FOR ESFAS OUTPUT 5002D2 FAILURE
			SGNOO01S	5.7E-02	(HE) FAIL TO START SAFETY INJECTION PUMP BY DAS
10	2.9E-06	1.3	!16PLOCW_IF	1.0E+00	PARTIAL LOSS OF COMPONENT COOLING WATER
			EFWOO01006AB	1.7E-02	(HE) FAIL TO CHANGEOVER EFW PIT
			RTPBSIFRT5003D2	3.0E-03	RPS-D GROUP-2 BUS MASTER CARD FOR I/O 5003D2 FAILURE
			SGNOO01S	5.7E-02	(HE) FAIL TO START SAFETY INJECTION PUMP BY DAS

Table 19.1-70 Internal Flood PRA Dominant Cutsets (Sheet 4 of 70)

Flood Source : FA2-320-01 2nd Dominant Scenario of CDF

Categories of loss-of-fluid events : Major Flood

No.	Cut Sets Freq. (/ry)	Percent	Cutsets	Frequency/ Probability	Description
1	4.3E-05	25.1	!16PLOCW_IF	1.0E+00	PARTIAL LOSS OF COMPONENT COOLING WATER
			EFWOO01006AB	1.7E-02	(HE) FAIL TO CHANGEOVER EFW PIT
			HPIOO02FWBD-S	2.6E-03	(HE) FAIL TO OPEN SAFETY DEPRESSURIZATION VALVE
2	5.1E-06	2.9	!16PLOCW_IF	1.0E+00	PARTIAL LOSS OF COMPONENT COOLING WATER
			EFWOO01006AB	1.7E-02	(HE) FAIL TO CHANGEOVER EFW PIT
			RTPNWIFRT5001C2	5.2E-03	RPS-C GROUP-2 NETWORK I/F CARD FOR UNIT BUS RT5001C2 FAILURE
			SGNOO01S	5.7E-02	(HE) FAIL TO START SAFETY INJECTION PUMP BY DAS
3	5.1E-06	2.9	!16PLOCW_IF	1.0E+00	PARTIAL LOSS OF COMPONENT COOLING WATER
			EFWOO01006AB	1.7E-02	(HE) FAIL TO CHANGEOVER EFW PIT
			RTPNWIFRT5002C2	5.2E-03	RPS-C GROUP-2 NETWORK I/F CARD FOR SAFETY BUS RT5002C2 FAILURE
			SGNOO01S	5.7E-02	(HE) FAIL TO START SAFETY INJECTION PUMP BY DAS
4	5.1E-06	2.9	!16PLOCW_IF	1.0E+00	PARTIAL LOSS OF COMPONENT COOLING WATER
			EFWOO01006AB	1.7E-02	(HE) FAIL TO CHANGEOVER EFW PIT
			RTPNWIFRT5001D2	5.2E-03	RPS-D GROUP-2 NETWORK I/F CARD FOR UNIT BUS RT5001D2 FAILURE
			SGNOO01S	5.7E-02	(HE) FAIL TO START SAFETY INJECTION PUMP BY DAS

Table 19.1-70 Internal Flood PRA Dominant Cutsets (Sheet 5 of 70)

Flood Source : FA2-320-01 2nd Dominant Scenario of CDF

Categories of loss-of-fluid events : Major Flood

No.	Cut Sets Freq. (/ry)	Percent	Cutsets	Frequency/ Probability	Description
5	5.1E-06	2.9	!16PLOCW_IF	1.0E+00	PARTIAL LOSS OF COMPONENT COOLING WATER
			EFWOO01006AB	1.7E-02	(HE) FAIL TO CHANGEOVER EFW PIT
			RTPNWIFRT5002D2	5.2E-03	RPS-D GROUP-2 NETWORK I/F CARD FOR SAFETY BUS RT5002D2 FAILURE
			SGNOO01S	5.7E-02	(HE) FAIL TO START SAFETY INJECTION PUMP BY DAS
6	4.3E-06	2.5	!16PLOCW_IF	1.0E+00	PARTIAL LOSS OF COMPONENT COOLING WATER
			EFWOO01006AB	1.7E-02	(HE) FAIL TO CHANGEOVER EFW PIT
			RTPCPUCRT5001D2	4.4E-03	RPS-D GROUP-2 CPU CARD RT5001D2 FAILURE
			SGNOO01S	5.7E-02	(HE) FAIL TO START SAFETY INJECTION PUMP BY DAS
7	4.3E-06	2.5	!16PLOCW_IF	1.0E+00	PARTIAL LOSS OF COMPONENT COOLING WATER
			EFWOO01006AB	1.7E-02	(HE) FAIL TO CHANGEOVER EFW PIT
			RTPCPUCRT5001C2	4.4E-03	RPS-C GROUP-2 CPU CARD RT5001C2 FAILURE
			SGNOO01S	5.7E-02	(HE) FAIL TO START SAFETY INJECTION PUMP BY DAS
8	2.9E-06	1.7	!16PLOCW_IF	1.0E+00	PARTIAL LOSS OF COMPONENT COOLING WATER
			EFWOO01006AB	1.7E-02	(HE) FAIL TO CHANGEOVER EFW PIT
			RTPBSIFRT5002D2	3.0E-03	RPS-D GROUP-2 BUS MASTER CARD FOR ESFAS OUTPUT 5002D2 FAILURE
			SGNOO01S	5.7E-02	(HE) FAIL TO START SAFETY INJECTION PUMP BY DAS

Table 19.1-70 Internal Flood PRA Dominant Cutsets (Sheet 6 of 70)

Flood Source : FA2-320-01 2nd Dominant Scenario of CDF

Categories of loss-of-fluid events : Major Flood

No.	Cut Sets Freq. (/ry)	Percent	Cutsets	Frequency/ Probability	Description
9	2.9E-06	1.7	!16PLOCW_IF	1.0E+00	PARTIAL LOSS OF COMPONENT COOLING WATER
			EFWOO01006AB	1.7E-02	(HE) FAIL TO CHANGEOVER EFW PIT
			RTPBSIFRT5003D2	3.0E-03	RPS-D GROUP-2 BUS MASTER CARD FOR I/O 5003D2 FAILURE
			SGNOO01S	5.7E-02	(HE) FAIL TO START SAFETY INJECTION PUMP BY DAS
10	2.9E-06	1.7	!16PLOCW_IF	1.0E+00	PARTIAL LOSS OF COMPONENT COOLING WATER
			EFWOO01006AB	1.7E-02	(HE) FAIL TO CHANGEOVER EFW PIT
			RTPBSIFRT5002C2	3.0E-03	RPS-C GROUP-2 BUS MASTER CARD FOR ESFAS OUTPUT 5002C2 FAILURE
			SGNOO01S	5.7E-02	(HE) FAIL TO START SAFETY INJECTION PUMP BY DAS

Table 19.1-70 Internal Flood PRA Dominant Cutsets (Sheet 7 of 70)

Flood Source : FA2-507-02 3rd Dominant Scenario of CDF

Categories of loss-of-fluid events : Flood

No.	Cut Sets Freq. (/ry)	Percent	Cutsets	Frequency/ Probability	Description
1	2.6E-03	78.3	!16PLOCW_IF	1.0E+00	PARTIAL LOSS OF COMPONENT COOLING WATER
			HPIOO02FWBD-S	2.6E-03	(HE) FAIL TO OPEN SAFETY DEPRESSURIZATION VALVE
2	1.3E-04	3.8	!16PLOCW_IF	1.0E+00	PARTIAL LOSS OF COMPONENT COOLING WATER
			PZRCF2MVOD117-ALL	1.3E-04	RCS-MOV-117A,B FAIL TO OPEN (CCF)
3	1.1E-04	3.4	!16PLOCW_IF	1.0E+00	PARTIAL LOSS OF COMPONENT COOLING WATER
			HPICF4PMAD001-ALL	1.1E-04	SIS-MPP-001A,B,C,D (SI PUMP) FAIL TO START (CCF)
4	4.8E-05	1.5	!16PLOCW_IF	1.0E+00	PARTIAL LOSS OF COMPONENT COOLING WATER
			HPITMPI001C	4.0E-03	SIS-MPP-001C (C-SI PUMP) TEST & MAINTENANCE
			SWSTMPE001D	1.2E-02	EWS-MPP-001D (D-ESW PUMP) TEST & MAINTENANCE
5	2.8E-05	0.86	!16PLOCW_IF	1.0E+00	PARTIAL LOSS OF COMPONENT COOLING WATER
			CWSTMRC001D	7.0E-03	NCS-MHX-001D (D-CCW HX) TEST & MAINTENANCE
			HPITMPI001C	4.0E-03	SIS-MPP-001C (C-SI PUMP) TEST & MAINTENANCE
6	2.4E-05	0.73	!16PLOCW_IF	1.0E+00	PARTIAL LOSS OF COMPONENT COOLING WATER
			CWSTMPC001D	6.0E-03	NCS-MPP-001D (D-CCW PUMP) TEST & MAINTENANCE
			HPITMPI001C	4.0E-03	SIS-MPP-001C (C-SI PUMP) TEST & MAINTENANCE
7	2.2E-05	0.66	!16PLOCW_IF	1.0E+00	PARTIAL LOSS OF COMPONENT COOLING WATER
			HPICF4PMAD001-23	2.2E-05	SIS-MPP-001C,D (SI PUMP) FAIL TO START (CCF)
8	1.6E-05	0.48	!16PLOCW_IF	1.0E+00	PARTIAL LOSS OF COMPONENT COOLING WATER
			HPIPMAD001C	1.3E-03	SIS-MPP-001C (C-SI PUMP) FAIL TO START
			SWSTMPE001D	1.2E-02	EWS-MPP-001D (D-ESW PUMP) TEST & MAINTENANCE
9	9.7E-06	0.30	!16PLOCW_IF	1.0E+00	PARTIAL LOSS OF COMPONENT COOLING WATER
			RWSCF4SUPR001-ALL	9.7E-06	SIS-SST-001A,B,C,D (ESS/CS STRAINER) PLUG DURING OPERATION (CCF)

Table 19.1-70 Internal Flood PRA Dominant Cutsets (Sheet 8 of 70)

Flood Source : FA2-507-02 3rd Dominant Scenario of CDF

Categories of loss-of-fluid events : Flood

No.	Cut Sets Freq. (/ry)	Percent	Cutsets	Frequency/ Probability	Description
10	9.5E-06	0.29	!16PLOCW_IF	1.0E+00	PARTIAL LOSS OF COMPONENT COOLING WATER
			HPICF4PMAD001-123	9.5E-06	SIS-MPP-001B,C,D (SI PUMP) FAIL TO START (CCF)

Table 19.1-70 Internal Flood PRA Dominant Cutsets (Sheet 9 of 70)

Flood Source : FA2-321-01 4th Dominant Scenario of CDF

Categories of loss-of-fluid events : Flood

No.	Cut Sets Freq. (/ry)	Percent	Cutsets	Frequency/ Probability	Description
1	4.3E-05	20.3	!16PLOCW_IF	1.0E+00	PARTIAL LOSS OF COMPONENT COOLING WATER
			EFWOO01006AB	1.7E-02	(HE) FAIL TO CHANGEOVER EFW PIT
			HPIOO02FWBD-S	2.6E-03	(HE) FAIL TO OPEN SAFETY DEPRESSURIZATION VALVE
2	5.1E-06	2.4	!16PLOCW_IF	1.0E+00	PARTIAL LOSS OF COMPONENT COOLING WATER
			EFWOO01006AB	1.7E-02	(HE) FAIL TO CHANGEOVER EFW PIT
			RTPNWIFRT5001C2	5.2E-03	RPS-C GROUP-2 NETWORK I/F CARD FOR UNIT BUS RT5001C2 FAILURE
			SGNOO01S	5.7E-02	(HE) FAIL TO START SAFETY INJECTION PUMP BY DAS
3	5.1E-06	2.4	!16PLOCW_IF	1.0E+00	PARTIAL LOSS OF COMPONENT COOLING WATER
			EFWOO01006AB	1.7E-02	(HE) FAIL TO CHANGEOVER EFW PIT
			RTPNWIFRT5002D2	5.2E-03	RPS-D GROUP-2 NETWORK I/F CARD FOR SAFETY BUS RT5002D2 FAILURE
			SGNOO01S	5.7E-02	(HE) FAIL TO START SAFETY INJECTION PUMP BY DAS
4	5.1E-06	2.4	!16PLOCW_IF	1.0E+00	PARTIAL LOSS OF COMPONENT COOLING WATER
			EFWOO01006AB	1.7E-02	(HE) FAIL TO CHANGEOVER EFW PIT
			RTPNWIFRT5002C2	5.2E-03	RPS-C GROUP-2 NETWORK I/F CARD FOR SAFETY BUS RT5002C2 FAILURE
			SGNOO01S	5.7E-02	(HE) FAIL TO START SAFETY INJECTION PUMP BY DAS

Table 19.1-70 Internal Flood PRA Dominant Cutsets (Sheet 10 of 70)

Flood Source : FA2-321-01 4th Dominant Scenario of CDF

Categories of loss-of-fluid events : Flood

No.	Cut Sets Freq. (/ry)	Percent	Cutsets	Frequency/ Probability	Description
5	5.1E-06	2.4	!16PLOCW_IF	1.0E+00	PARTIAL LOSS OF COMPONENT COOLING WATER
			EFWOO01006AB	1.7E-02	(HE) FAIL TO CHANGEOVER EFW PIT
			RTPNWIFRT5001D2	5.2E-03	RPS-D GROUP-2 NETWORK I/F CARD FOR UNIT BUS RT5001D2 FAILURE
			SGNOO01S	5.7E-02	(HE) FAIL TO START SAFETY INJECTION PUMP BY DAS
6	4.3E-06	2.0	!16PLOCW_IF	1.0E+00	PARTIAL LOSS OF COMPONENT COOLING WATER
			EFWOO01006AB	1.7E-02	(HE) FAIL TO CHANGEOVER EFW PIT
			RTPCPUCRT5001D2	4.4E-03	RPS-D GROUP-2 CPU CARD RT5001D2 FAILURE
			SGNOO01S	5.7E-02	(HE) FAIL TO START SAFETY INJECTION PUMP BY DAS
7	4.3E-06	2.0	!16PLOCW_IF	1.0E+00	PARTIAL LOSS OF COMPONENT COOLING WATER
			EFWOO01006AB	1.7E-02	(HE) FAIL TO CHANGEOVER EFW PIT
			RTPCPUCRT5001C2	4.4E-03	RPS-C GROUP-2 CPU CARD RT5001C2 FAILURE
			SGNOO01S	5.7E-02	(HE) FAIL TO START SAFETY INJECTION PUMP BY DAS
8	2.9E-06	1.3	!16PLOCW_IF	1.0E+00	PARTIAL LOSS OF COMPONENT COOLING WATER
			EFWOO01006AB	1.7E-02	(HE) FAIL TO CHANGEOVER EFW PIT
			RTPBSIFRT5001C2	3.0E-03	RPS-C GROUP-2 BUS MASTER CARD FOR RPS COMMUNICATION 5001C2 FAILURE
			SGNOO01S	5.7E-02	(HE) FAIL TO START SAFETY INJECTION PUMP BY DAS

Table 19.1-70 Internal Flood PRA Dominant Cutsets (Sheet 11 of 70)

Flood Source : FA2-321-01 4th Dominant Scenario of CDF

Categories of loss-of-fluid events : Flood

No.	Cut Sets Freq. (/ry)	Percent	Cutsets	Frequency/ Probability	Description
9	2.9E-06	1.3	!16PLOCW_IF	1.0E+00	PARTIAL LOSS OF COMPONENT COOLING WATER
			EFWOO01006AB	1.7E-02	(HE) FAIL TO CHANGEOVER EFW PIT
			RTPBSIFRT5002D2	3.0E-03	RPS-D GROUP-2 BUS MASTER CARD FOR ESFAS OUTPUT 5002D2 FAILURE
			SGNOO01S	5.7E-02	(HE) FAIL TO START SAFETY INJECTION PUMP BY DAS
10	2.9E-06	1.3	!16PLOCW_IF	1.0E+00	PARTIAL LOSS OF COMPONENT COOLING WATER
			EFWOO01006AB	1.7E-02	(HE) FAIL TO CHANGEOVER EFW PIT
			RTPBSIFRT5003D2	3.0E-03	RPS-D GROUP-2 BUS MASTER CARD FOR I/O 5003D2 FAILURE
			SGNOO01S	5.7E-02	(HE) FAIL TO START SAFETY INJECTION PUMP BY DAS

Table 19.1-70 Internal Flood PRA Dominant Cutsets (Sheet 12 of 70)

Flood Source : FA2-320-01 5th Dominant Scenario of CDF

Categories of loss-of-fluid events : Flood

No.	Cut Sets Freq. (/ry)	Percent	Cutsets	Frequency/ Probability	Description
1	4.3E-05	25.1	!16PLOCW_IF	1.0E+00	PARTIAL LOSS OF COMPONENT COOLING WATER
			EFWOO01006AB	1.7E-02	(HE) FAIL TO CHANGEOVER EFW PIT
			HPIOO02FWBD-S	2.6E-03	(HE) FAIL TO OPEN SAFETY DEPRESSURIZATION VALVE
2	5.1E-06	2.9	!16PLOCW_IF	1.0E+00	PARTIAL LOSS OF COMPONENT COOLING WATER
			EFWOO01006AB	1.7E-02	(HE) FAIL TO CHANGEOVER EFW PIT
			RTPNWIFRT5001C2	5.2E-03	RPS-C GROUP-2 NETWORK I/F CARD FOR UNIT BUS RT5001C2 FAILURE
			SGNOO01S	5.7E-02	(HE) FAIL TO START SAFETY INJECTION PUMP BY DAS
3	5.1E-06	2.9	!16PLOCW_IF	1.0E+00	PARTIAL LOSS OF COMPONENT COOLING WATER
			EFWOO01006AB	1.7E-02	(HE) FAIL TO CHANGEOVER EFW PIT
			RTPNWIFRT5002C2	5.2E-03	RPS-C GROUP-2 NETWORK I/F CARD FOR SAFETY BUS RT5002C2 FAILURE
			SGNOO01S	5.7E-02	(HE) FAIL TO START SAFETY INJECTION PUMP BY DAS
4	5.1E-06	2.9	!16PLOCW_IF	1.0E+00	PARTIAL LOSS OF COMPONENT COOLING WATER
			EFWOO01006AB	1.7E-02	(HE) FAIL TO CHANGEOVER EFW PIT
			RTPNWIFRT5001D2	5.2E-03	RPS-D GROUP-2 NETWORK I/F CARD FOR UNIT BUS RT5001D2 FAILURE
			SGNOO01S	5.7E-02	(HE) FAIL TO START SAFETY INJECTION PUMP BY DAS

Table 19.1-70 Internal Flood PRA Dominant Cutsets (Sheet 13 of 70)

Flood Source : FA2-320-01 5th Dominant Scenario of CDF

Categories of loss-of-fluid events : Flood

No.	Cut Sets Freq. (/ry)	Percent	Cutsets	Frequency/ Probability	Description
5	5.1E-06	2.9	!16PLOCW_IF	1.0E+00	PARTIAL LOSS OF COMPONENT COOLING WATER
			EFWOO01006AB	1.7E-02	(HE) FAIL TO CHANGEOVER EFW PIT
			RTPNWIFRT5002D2	5.2E-03	RPS-D GROUP-2 NETWORK I/F CARD FOR SAFETY BUS RT5002D2 FAILURE
			SGNOO01S	5.7E-02	(HE) FAIL TO START SAFETY INJECTION PUMP BY DAS
6	4.3E-06	2.5	!16PLOCW_IF	1.0E+00	PARTIAL LOSS OF COMPONENT COOLING WATER
			EFWOO01006AB	1.7E-02	(HE) FAIL TO CHANGEOVER EFW PIT
			RTPCPUCRT5001D2	4.4E-03	RPS-D GROUP-2 CPU CARD RT5001D2 FAILURE
			SGNOO01S	5.7E-02	(HE) FAIL TO START SAFETY INJECTION PUMP BY DAS
7	4.3E-06	2.5	!16PLOCW_IF	1.0E+00	PARTIAL LOSS OF COMPONENT COOLING WATER
			EFWOO01006AB	1.7E-02	(HE) FAIL TO CHANGEOVER EFW PIT
			RTPCPUCRT5001C2	4.4E-03	RPS-C GROUP-2 CPU CARD RT5001C2 FAILURE
			SGNOO01S	5.7E-02	(HE) FAIL TO START SAFETY INJECTION PUMP BY DAS
8	2.9E-06	1.7	!16PLOCW_IF	1.0E+00	PARTIAL LOSS OF COMPONENT COOLING WATER
			EFWOO01006AB	1.7E-02	(HE) FAIL TO CHANGEOVER EFW PIT
			RTPBSIFRT5002D2	3.0E-03	RPS-D GROUP-2 BUS MASTER CARD FOR ESFAS OUTPUT 5002D2 FAILURE
			SGNOO01S	5.7E-02	(HE) FAIL TO START SAFETY INJECTION PUMP BY DAS

Table 19.1-70 Internal Flood PRA Dominant Cutsets (Sheet 14 of 70)

Flood Source : FA2-320-01 5th Dominant Scenario of CDF

Categories of loss-of-fluid events : Flood

No.	Cut Sets Freq. (/ry)	Percent	Cutsets	Frequency/ Probability	Description
9	2.9E-06	1.7	!16PLOCW_IF	1.0E+00	PARTIAL LOSS OF COMPONENT COOLING WATER
			EFWOO01006AB	1.7E-02	(HE) FAIL TO CHANGEOVER EFW PIT
			RTPBSIFRT5003D2	3.0E-03	RPS-D GROUP-2 BUS MASTER CARD FOR I/O 5003D2 FAILURE
			SGNOO01S	5.7E-02	(HE) FAIL TO START SAFETY INJECTION PUMP BY DAS
10	2.9E-06	1.7	!16PLOCW_IF	1.0E+00	PARTIAL LOSS OF COMPONENT COOLING WATER
			EFWOO01006AB	1.7E-02	(HE) FAIL TO CHANGEOVER EFW PIT
			RTPBSIFRT5002C2	3.0E-03	RPS-C GROUP-2 BUS MASTER CARD FOR ESFAS OUTPUT 5002C2 FAILURE
			SGNOO01S	5.7E-02	(HE) FAIL TO START SAFETY INJECTION PUMP BY DAS

Table 19.1-70 Internal Flood PRA Dominant Cutsets (Sheet 15 of 70)

Flood Source : FA2-102-01 6th Dominant Scenario of CDF

Categories of loss-of-fluid events : Major Flood

No.	Cut Sets Freq. (/ry)	Percent	Cutsets	Frequency/ Probability	Description
1	4.3E-05	64.5	!16PLOCW_IF	1.0E+00	PARTIAL LOSS OF COMPONENT COOLING WATER
			EFWOO01006AB	1.7E-02	(HE) FAIL TO CHANGEOVER EFW PIT
			HPIOO02FWBD-S	2.6E-03	(HE) FAIL TO OPEN SAFETY DEPRESSURIZATION VALVE
2	2.1E-06	3.2	!16PLOCW_IF	1.0E+00	PARTIAL LOSS OF COMPONENT COOLING WATER
			EFWOO01006AB	1.7E-02	(HE) FAIL TO CHANGEOVER EFW PIT
			PZRCF2MVOD117-ALL	1.3E-04	RCS-MOV-117A,B FAIL TO OPEN (CCF)
3	1.9E-06	2.8	!16PLOCW_IF	1.0E+00	PARTIAL LOSS OF COMPONENT COOLING WATER
			EFWOO01006AB	1.7E-02	(HE) FAIL TO CHANGEOVER EFW PIT
			HPICF4PMAD001-ALL	1.1E-04	SIS-MPP-001A,B,C,D (SI PUMP) FAIL TO START (CCF)
4	1.8E-06	2.7	!16PLOCW_IF	1.0E+00	PARTIAL LOSS OF COMPONENT COOLING WATER
			EFWXVCD007B	7.0E-04	EFS-VLV-007B FAIL TO CLOSE
			HPIOO02FWBD-S	2.6E-03	(HE) FAIL TO OPEN SAFETY DEPRESSURIZATION VALVE
5	1.8E-06	2.7	!16PLOCW_IF	1.0E+00	PARTIAL LOSS OF COMPONENT COOLING WATER
			EFWXVOD006B	7.0E-04	EFS-VLV-006B FAIL TO OPEN
			HPIOO02FWBD-S	2.6E-03	(HE) FAIL TO OPEN SAFETY DEPRESSURIZATION VALVE
6	8.1E-07	1.2	!16PLOCW_IF	1.0E+00	PARTIAL LOSS OF COMPONENT COOLING WATER
			EFWOO01006AB	1.7E-02	(HE) FAIL TO CHANGEOVER EFW PIT
			HPITMPI001C	4.0E-03	SIS-MPP-001C (C-SI PUMP) TEST & MAINTENANCE
			SWSTMPE001D	1.2E-02	EWS-MPP-001D (D-ESW PUMP) TEST & MAINTENANCE

Table 19.1-70 Internal Flood PRA Dominant Cutsets (Sheet 16 of 70)

Flood Source : FA2-102-01 6th Dominant Scenario of CDF

Categories of loss-of-fluid events : Major Flood

No.	Cut Sets Freq. (/ry)	Percent	Cutsets	Frequency/ Probability	Description
7	5.7E-07	0.86	!16PLOCW_IF	1.0E+00	PARTIAL LOSS OF COMPONENT COOLING WATER
			RCP----SEAL	1.0E+00	RCP SEAL LOCA
			SGNBTSWCCF2	1.0E-05	GROUP-2 APPLICATION SOFTWARE CCF
			SGNOO01S	5.7E-02	(HE) FAIL TO START SAFETY INJECTION PUMP BY DAS
8	4.7E-07	0.71	!16PLOCW_IF	1.0E+00	PARTIAL LOSS OF COMPONENT COOLING WATER
			CWSTMRC001D	7.0E-03	NCS-MHX-001D (D-CCW HX) TEST & MAINTENANCE
			EFWOO01006AB	1.7E-02	(HE) FAIL TO CHANGEOVER EFW PIT
			HPITMPI001C	4.0E-03	SIS-MPP-001C (C-SI PUMP) TEST & MAINTENANCE
9	4.1E-07	0.60	!16PLOCW_IF	1.0E+00	PARTIAL LOSS OF COMPONENT COOLING WATER
			CWSTMPC001D	6.0E-03	NCS-MPP-001D (D-CCW PUMP) TEST & MAINTENANCE
			EFWOO01006AB	1.7E-02	(HE) FAIL TO CHANGEOVER EFW PIT
			HPITMPI001C	4.0E-03	SIS-MPP-001C (C-SI PUMP) TEST & MAINTENANCE
10	3.6E-07	0.54	!16PLOCW_IF	1.0E+00	PARTIAL LOSS OF COMPONENT COOLING WATER
			EFWOO01006AB	1.7E-02	(HE) FAIL TO CHANGEOVER EFW PIT
			HPICF4PMAD001-23	2.2E-05	SIS-MPP-001C,D (SI PUMP) FAIL TO START (CCF)

Table 19.1-70 Internal Flood PRA Dominant Cutsets (Sheet 17 of 70)

Flood Source : FA2-111-01 7th Dominant Scenario of CDF

Categories of loss-of-fluid events : Major Flood

No.	Cut Sets Freq. (/ry)	Percent	Cutsets	Frequency/ Probability	Description
1	4.3E-05	64.5	!16PLOCW_IF	1.0E+00	PARTIAL LOSS OF COMPONENT COOLING WATER
			EFWOO01006AB	1.7E-02	(HE) FAIL TO CHANGEOVER EFW PIT
			HPIOO02FWBD-S	2.6E-03	(HE) FAIL TO OPEN SAFETY DEPRESSURIZATION VALVE
2	2.1E-06	3.2	!16PLOCW_IF	1.0E+00	PARTIAL LOSS OF COMPONENT COOLING WATER
			EFWOO01006AB	1.7E-02	(HE) FAIL TO CHANGEOVER EFW PIT
			PZRCF2MVOD117-ALL	1.3E-04	RCS-MOV-117A,B FAIL TO OPEN (CCF)
3	1.9E-06	2.8	!16PLOCW_IF	1.0E+00	PARTIAL LOSS OF COMPONENT COOLING WATER
			EFWOO01006AB	1.7E-02	(HE) FAIL TO CHANGEOVER EFW PIT
			HPICF4PMAD001-ALL	1.1E-04	SIS-MPP-001A,B,C,D (SI PUMP) FAIL TO START (CCF)
4	1.8E-06	2.7	!16PLOCW_IF	1.0E+00	PARTIAL LOSS OF COMPONENT COOLING WATER
			EFWXVCD007B	7.0E-04	EFS-VLV-007B FAIL TO CLOSE
			HPIOO02FWBD-S	2.6E-03	(HE) FAIL TO OPEN SAFETY DEPRESSURIZATION VALVE
5	1.8E-06	2.7	!16PLOCW_IF	1.0E+00	PARTIAL LOSS OF COMPONENT COOLING WATER
			EFWXVOD006B	7.0E-04	EFS-VLV-006B FAIL TO OPEN
			HPIOO02FWBD-S	2.6E-03	(HE) FAIL TO OPEN SAFETY DEPRESSURIZATION VALVE
6	8.1E-07	1.2	!16PLOCW_IF	1.0E+00	PARTIAL LOSS OF COMPONENT COOLING WATER
			EFWOO01006AB	1.7E-02	(HE) FAIL TO CHANGEOVER EFW PIT
			HPITMPI001C	4.0E-03	SIS-MPP-001C (C-SI PUMP) TEST & MAINTENANCE
			SWSTMPE001D	1.2E-02	EWS-MPP-001D (D-ESW PUMP) TEST & MAINTENANCE

Table 19.1-70 Internal Flood PRA Dominant Cutsets (Sheet 18 of 70)

Flood Source : FA2-111-01 7th Dominant Scenario of CDF

Categories of loss-of-fluid events : Major Flood

No.	Cut Sets Freq. (/ry)	Percent	Cutsets	Frequency/ Probability	Description
7	5.7E-07	0.86	!16PLOCW_IF	1.0E+00	PARTIAL LOSS OF COMPONENT COOLING WATER
			RCP----SEAL	1.0E+00	RCP SEAL LOCA
			SGNBTSWCCF2	1.0E-05	GROUP-2 APPLICATION SOFTWARE CCF
			SGNOO01S	5.7E-02	(HE) FAIL TO START SAFETY INJECTION PUMP BY DAS
8	4.7E-07	0.71	!16PLOCW_IF	1.0E+00	PARTIAL LOSS OF COMPONENT COOLING WATER
			CWSTMRC001D	7.0E-03	NCS-MHX-001D (D-CCW HX) TEST & MAINTENANCE
			EFWOO01006AB	1.7E-02	(HE) FAIL TO CHANGEOVER EFW PIT
			HPITMPI001C	4.0E-03	SIS-MPP-001C (C-SI PUMP) TEST & MAINTENANCE
9	4.1E-07	0.60	!16PLOCW_IF	1.0E+00	PARTIAL LOSS OF COMPONENT COOLING WATER
			CWSTMPC001D	6.0E-03	NCS-MPP-001D (D-CCW PUMP) TEST & MAINTENANCE
			EFWOO01006AB	1.7E-02	(HE) FAIL TO CHANGEOVER EFW PIT
			HPITMPI001C	4.0E-03	SIS-MPP-001C (C-SI PUMP) TEST & MAINTENANCE
10	3.6E-07	0.54	!16PLOCW_IF	1.0E+00	PARTIAL LOSS OF COMPONENT COOLING WATER
			EFWOO01006AB	1.7E-02	(HE) FAIL TO CHANGEOVER EFW PIT
			HPICF4PMAD001-23	2.2E-05	SIS-MPP-001C,D (SI PUMP) FAIL TO START (CCF)

Table 19.1-70 Internal Flood PRA Dominant Cutsets (Sheet 19 of 70)

Flood Source : FA2-108-01 8th Dominant Scenario of CDF

Categories of loss-of-fluid events : Major Flood

No.	Cut Sets Freq. (/ry)	Percent	Cutsets	Frequency/ Probability	Description
1	4.3E-05	52.9	!16PLOCW_IF	1.0E+00	PARTIAL LOSS OF COMPONENT COOLING WATER
			EFWOO01006AB	1.7E-02	(HE) FAIL TO CHANGEOVER EFW PIT
			HPIOO02FWBD-S	2.6E-03	(HE) FAIL TO OPEN SAFETY DEPRESSURIZATION VALVE
2	2.1E-06	2.6	!16PLOCW_IF	1.0E+00	PARTIAL LOSS OF COMPONENT COOLING WATER
			EFWOO01006AB	1.7E-02	(HE) FAIL TO CHANGEOVER EFW PIT
			PZRCF2MVOD117-ALL	1.3E-04	RCS-MOV-117A,B FAIL TO OPEN (CCF)
3	1.9E-06	2.3	!16PLOCW_IF	1.0E+00	PARTIAL LOSS OF COMPONENT COOLING WATER
			EFWOO01006AB	1.7E-02	(HE) FAIL TO CHANGEOVER EFW PIT
			HPICF4PMAD001-ALL	1.1E-04	SIS-MPP-001A,B,C,D (SI PUMP) FAIL TO START (CCF)
4	1.8E-06	2.2	!16PLOCW_IF	1.0E+00	PARTIAL LOSS OF COMPONENT COOLING WATER
			EFWXVOD006B	7.0E-04	EFS-VLV-006B FAIL TO OPEN
			HPIOO02FWBD-S	2.6E-03	(HE) FAIL TO OPEN SAFETY DEPRESSURIZATION VALVE
5	1.8E-06	2.2	!16PLOCW_IF	1.0E+00	PARTIAL LOSS OF COMPONENT COOLING WATER
			EFWXVCD007B	7.0E-04	EFS-VLV-007B FAIL TO CLOSE
			HPIOO02FWBD-S	2.6E-03	(HE) FAIL TO OPEN SAFETY DEPRESSURIZATION VALVE
6	1.4E-06	1.7	!16PLOCW_IF	1.0E+00	PARTIAL LOSS OF COMPONENT COOLING WATER
			EFWOO01006AB	1.7E-02	(HE) FAIL TO CHANGEOVER EFW PIT
			RSSCF4MVOD145-ALL	8.4E-05	NCS-MOV-145A,B,C,D FAIL TO OPEN (CCF)
7	1.4E-06	1.7	!16PLOCW_IF	1.0E+00	PARTIAL LOSS OF COMPONENT COOLING WATER
			EFWOO01006AB	1.7E-02	(HE) FAIL TO CHANGEOVER EFW PIT
			RSSCF4MVOD004-ALL	8.4E-05	CSS-MOV-004A,B,C,D FAIL TO OPEN (CCF)

Table 19.1-70 Internal Flood PRA Dominant Cutsets (Sheet 20 of 70)

Flood Source : FA2-108-01 8th Dominant Scenario of CDF

Categories of loss-of-fluid events : Major Flood

No.	Cut Sets Freq. (/ry)	Percent	Cutsets	Frequency/ Probability	Description
8	1.0E-06	1.2	!16PLOCW_IF	1.0E+00	PARTIAL LOSS OF COMPONENT COOLING WATER
			EFWOO01006AB	1.7E-02	(HE) FAIL TO CHANGEOVER EFW PIT
			RSSTMRP001C	5.0E-03	RHS-MHX-001C (C-CS/RHR HX) TEST & MAINTENANCE
			SWSTMPE001D	1.2E-02	EWS-MPP-001D (D-ESW PUMP) TEST & MAINTENANCE
9	8.1E-07	0.99	!16PLOCW_IF	1.0E+00	PARTIAL LOSS OF COMPONENT COOLING WATER
			EFWOO01006AB	1.7E-02	(HE) FAIL TO CHANGEOVER EFW PIT
			RSSTMPI001C	4.0E-03	RHS-MPP-001C (C-CS/RHR PUMP) TEST & MAINTENANCE
			SWSTMPE001D	1.2E-02	EWS-MPP-001D (D-ESW PUMP) TEST & MAINTENANCE
10	8.1E-07	0.99	!16PLOCW_IF	1.0E+00	PARTIAL LOSS OF COMPONENT COOLING WATER
			EFWOO01006AB	1.7E-02	(HE) FAIL TO CHANGEOVER EFW PIT
			HPITMPI001C	4.0E-03	SIS-MPP-001C (C-SI PUMP) TEST & MAINTENANCE
			SWSTMPE001D	1.2E-02	EWS-MPP-001D (D-ESW PUMP) TEST & MAINTENANCE

Table 19.1-70 Internal Flood PRA Dominant Cutsets (Sheet 21 of 70)

Flood Source : FA2-420-01 9th Dominant Scenario of CDF

Categories of loss-of-fluid events : Flood

No.	Cut Sets Freq. (/ry)	Percent	Cutsets	Frequency/ Probability	Description
1	4.3E-05	62.2	!16PLOCW_IF	1.0E+00	PARTIAL LOSS OF COMPONENT COOLING WATER
			EFWOO01006AB	1.7E-02	(HE) FAIL TO CHANGEOVER EFW PIT
			HPIOO02FWBD-S	2.6E-03	(HE) FAIL TO OPEN SAFETY DEPRESSURIZATION VALVE
2	2.1E-06	3.1	!16PLOCW_IF	1.0E+00	PARTIAL LOSS OF COMPONENT COOLING WATER
			EFWOO01006AB	1.7E-02	(HE) FAIL TO CHANGEOVER EFW PIT
			PZRCF2MVOD117-ALL	1.3E-04	RCS-MOV-117A,B FAIL TO OPEN (CCF)
3	1.9E-06	2.7	!16PLOCW_IF	1.0E+00	PARTIAL LOSS OF COMPONENT COOLING WATER
			EFWOO01006AB	1.7E-02	(HE) FAIL TO CHANGEOVER EFW PIT
			HPICF4PMAD001-ALL	1.1E-04	SIS-MPP-001A,B,C,D (SI PUMP) FAIL TO START (CCF)
4	1.8E-06	2.6	!16PLOCW_IF	1.0E+00	PARTIAL LOSS OF COMPONENT COOLING WATER
			EFWXVOD006B	7.0E-04	EFS-VLV-006B FAIL TO OPEN
			HPIOO02FWBD-S	2.6E-03	(HE) FAIL TO OPEN SAFETY DEPRESSURIZATION VALVE
5	1.8E-06	2.6	!16PLOCW_IF	1.0E+00	PARTIAL LOSS OF COMPONENT COOLING WATER
			EFWXVCD007B	7.0E-04	EFS-VLV-007B FAIL TO CLOSE
			HPIOO02FWBD-S	2.6E-03	(HE) FAIL TO OPEN SAFETY DEPRESSURIZATION VALVE
6	8.1E-07	1.2	!16PLOCW_IF	1.0E+00	PARTIAL LOSS OF COMPONENT COOLING WATER
			EFWOO01006AB	1.7E-02	(HE) FAIL TO CHANGEOVER EFW PIT
			HPITMPI001C	4.0E-03	SIS-MPP-001C (C-SI PUMP) TEST & MAINTENANCE
			SWSTMPE001D	1.2E-02	EWS-MPP-001D (D-ESW PUMP) TEST & MAINTENANCE
7	5.7E-07	0.83	!16PLOCW_IF	1.0E+00	PARTIAL LOSS OF COMPONENT COOLING WATER
			RCP----SEAL	1.0E+00	RCP SEAL LOCA
			SGNBTSWCCF2	1.0E-05	GROUP-2 APPLICATION SOFTWARE CCF
			SGNOO01S	5.7E-02	(HE) FAIL TO START SAFETY INJECTION PUMP BY DAS

Table 19.1-70 Internal Flood PRA Dominant Cutsets (Sheet 22 of 70)

Flood Source : FA2-420-01 9th Dominant Scenario of CDF

Categories of loss-of-fluid events : Flood

No.	Cut Sets Freq. (/ry)	Percent	Cutsets	Frequency/ Probability	Description
8	4.7E-07	0.68	!16PLOCW_IF	1.0E+00	PARTIAL LOSS OF COMPONENT COOLING WATER
			CWSTMRC001D	7.0E-03	NCS-MHX-001D (D-CCW HX) TEST & MAINTENANCE
			EFWOO01006AB	1.7E-02	(HE) FAIL TO CHANGEOVER EFW PIT
			HPITMPI001C	4.0E-03	SIS-MPP-001C (C-SI PUMP) TEST & MAINTENANCE
9	4.1E-07	0.58	!16PLOCW_IF	1.0E+00	PARTIAL LOSS OF COMPONENT COOLING WATER
			CWSTMPC001D	6.0E-03	NCS-MPP-001D (D-CCW PUMP) TEST & MAINTENANCE
			EFWOO01006AB	1.7E-02	(HE) FAIL TO CHANGEOVER EFW PIT
			HPITMPI001C	4.0E-03	SIS-MPP-001C (C-SI PUMP) TEST & MAINTENANCE
10	3.6E-07	0.52	!16PLOCW_IF	1.0E+00	PARTIAL LOSS OF COMPONENT COOLING WATER
			EFWOO01006AB	1.7E-02	(HE) FAIL TO CHANGEOVER EFW PIT
			HPICF4PMAD001-23	2.2E-05	SIS-MPP-001C,D (SI PUMP) FAIL TO START (CCF)

Table 19.1-70 Internal Flood PRA Dominant Cutsets (Sheet 23 of 70)

Flood Source : FA2-109-01 10th Dominant Scenario of CDF

Categories of loss-of-fluid events : Major Flood

No.	Cut Sets Freq. (/ry)	Percent	Cutsets	Frequency/ Probability	Description
1	4.3E-05	52.9	!16PLOCW_IF	1.0E+00	PARTIAL LOSS OF COMPONENT COOLING WATER
			EFWOO01006AB	1.7E-02	(HE) FAIL TO CHANGEOVER EFW PIT
			HPIOO02FWBD-S	2.6E-03	(HE) FAIL TO OPEN SAFETY DEPRESSURIZATION VALVE
2	2.1E-06	2.6	!16PLOCW_IF	1.0E+00	PARTIAL LOSS OF COMPONENT COOLING WATER
			EFWOO01006AB	1.7E-02	(HE) FAIL TO CHANGEOVER EFW PIT
			PZRCF2MVOD117-ALL	1.3E-04	RCS-MOV-117A,B FAIL TO OPEN (CCF)
3	1.9E-06	2.3	!16PLOCW_IF	1.0E+00	PARTIAL LOSS OF COMPONENT COOLING WATER
			EFWOO01006AB	1.7E-02	(HE) FAIL TO CHANGEOVER EFW PIT
			HPICF4PMAD001-ALL	1.1E-04	SIS-MPP-001A,B,C,D (SI PUMP) FAIL TO START (CCF)
4	1.8E-06	2.2	!16PLOCW_IF	1.0E+00	PARTIAL LOSS OF COMPONENT COOLING WATER
			EFWXVOD006B	7.0E-04	EFS-VLV-006B FAIL TO OPEN
			HPIOO02FWBD-S	2.6E-03	(HE) FAIL TO OPEN SAFETY DEPRESSURIZATION VALVE
5	1.8E-06	2.2	!16PLOCW_IF	1.0E+00	PARTIAL LOSS OF COMPONENT COOLING WATER
			EFWXVCD007B	7.0E-04	EFS-VLV-007B FAIL TO CLOSE
			HPIOO02FWBD-S	2.6E-03	(HE) FAIL TO OPEN SAFETY DEPRESSURIZATION VALVE
6	1.4E-06	1.7	!16PLOCW_IF	1.0E+00	PARTIAL LOSS OF COMPONENT COOLING WATER
			EFWOO01006AB	1.7E-02	(HE) FAIL TO CHANGEOVER EFW PIT
			RSSCF4MVOD145-ALL	8.4E-05	NCS-MOV-145A,B,C,D FAIL TO OPEN (CCF)
7	1.4E-06	1.7	!16PLOCW_IF	1.0E+00	PARTIAL LOSS OF COMPONENT COOLING WATER
			EFWOO01006AB	1.7E-02	(HE) FAIL TO CHANGEOVER EFW PIT
			RSSCF4MVOD004-ALL	8.4E-05	CSS-MOV-004A,B,C,D FAIL TO OPEN (CCF)

Table 19.1-70 Internal Flood PRA Dominant Cutsets (Sheet 24 of 70)

Flood Source : FA2-109-01 10th Dominant Scenario of CDF

Categories of loss-of-fluid events : Major Flood

No.	Cut Sets Freq. (/ry)	Percent	Cutsets	Frequency/ Probability	Description
8	1.0E-06	1.2	!16PLOCW_IF	1.0E+00	PARTIAL LOSS OF COMPONENT COOLING WATER
			EFWOO01006AB	1.7E-02	(HE) FAIL TO CHANGEOVER EFW PIT
			RSSTMRP001C	5.0E-03	RHS-MHX-001C (C-CS/RHR HX) TEST & MAINTENANCE
			SWSTMPE001D	1.2E-02	EWS-MPP-001D (D-ESW PUMP) TEST & MAINTENANCE
9	8.1E-07	0.99	!16PLOCW_IF	1.0E+00	PARTIAL LOSS OF COMPONENT COOLING WATER
			EFWOO01006AB	1.7E-02	(HE) FAIL TO CHANGEOVER EFW PIT
			RSSTMPI001C	4.0E-03	RHS-MPP-001C (C-CS/RHR PUMP) TEST & MAINTENANCE
			SWSTMPE001D	1.2E-02	EWS-MPP-001D (D-ESW PUMP) TEST & MAINTENANCE
10	8.1E-07	0.99	!16PLOCW_IF	1.0E+00	PARTIAL LOSS OF COMPONENT COOLING WATER
			EFWOO01006AB	1.7E-02	(HE) FAIL TO CHANGEOVER EFW PIT
			HPITMPI001C	4.0E-03	SIS-MPP-001C (C-SI PUMP) TEST & MAINTENANCE
			SWSTMPE001D	1.2E-02	EWS-MPP-001D (D-ESW PUMP) TEST & MAINTENANCE

Table 19.1-70 Internal Flood PRA Dominant Cutsets (Sheet 25 of 70)

Flood Source : FA2-108-01 11th Dominant Scenario of CDF

Categories of loss-of-fluid events : Flood

No.	Cut Sets Freq. (/ry)	Percent	Cutsets	Frequency/ Probability	Description
1	4.3E-05	52.9	!16PLOCW_IF	1.0E+00	PARTIAL LOSS OF COMPONENT COOLING WATER
			EFWOO01006AB	1.7E-02	(HE) FAIL TO CHANGEOVER EFW PIT
			HPIOO02FWBD-S	2.6E-03	(HE) FAIL TO OPEN SAFETY DEPRESSURIZATION VALVE
2	2.1E-06	2.6	!16PLOCW_IF	1.0E+00	PARTIAL LOSS OF COMPONENT COOLING WATER
			EFWOO01006AB	1.7E-02	(HE) FAIL TO CHANGEOVER EFW PIT
			PZRCF2MVOD117-ALL	1.3E-04	RCS-MOV-117A,B FAIL TO OPEN (CCF)
3	1.9E-06	2.3	!16PLOCW_IF	1.0E+00	PARTIAL LOSS OF COMPONENT COOLING WATER
			EFWOO01006AB	1.7E-02	(HE) FAIL TO CHANGEOVER EFW PIT
			HPICF4PMAD001-ALL	1.1E-04	SIS-MPP-001A,B,C,D (SI PUMP) FAIL TO START (CCF)
4	1.8E-06	2.2	!16PLOCW_IF	1.0E+00	PARTIAL LOSS OF COMPONENT COOLING WATER
			EFWXVOD006B	7.0E-04	EFS-VLV-006B FAIL TO OPEN
			HPIOO02FWBD-S	2.6E-03	(HE) FAIL TO OPEN SAFETY DEPRESSURIZATION VALVE
5	1.8E-06	2.2	!16PLOCW_IF	1.0E+00	PARTIAL LOSS OF COMPONENT COOLING WATER
			EFWXVCD007B	7.0E-04	EFS-VLV-007B FAIL TO CLOSE
			HPIOO02FWBD-S	2.6E-03	(HE) FAIL TO OPEN SAFETY DEPRESSURIZATION VALVE
6	1.4E-06	1.7	!16PLOCW_IF	1.0E+00	PARTIAL LOSS OF COMPONENT COOLING WATER
			EFWOO01006AB	1.7E-02	(HE) FAIL TO CHANGEOVER EFW PIT
			RSSCF4MVOD145-ALL	8.4E-05	NCS-MOV-145A,B,C,D FAIL TO OPEN (CCF)
7	1.4E-06	1.7	!16PLOCW_IF	1.0E+00	PARTIAL LOSS OF COMPONENT COOLING WATER
			EFWOO01006AB	1.7E-02	(HE) FAIL TO CHANGEOVER EFW PIT
			RSSCF4MVOD004-ALL	8.4E-05	CSS-MOV-004A,B,C,D FAIL TO OPEN (CCF)

Table 19.1-70 Internal Flood PRA Dominant Cutsets (Sheet 26 of 70)

Flood Source : FA2-108-01 11th Dominant Scenario of CDF

Categories of loss-of-fluid events : Flood

No.	Cut Sets Freq. (/ry)	Percent	Cutsets	Frequency/ Probability	Description
8	1.0E-06	1.2	!16PLOCW_IF	1.0E+00	PARTIAL LOSS OF COMPONENT COOLING WATER
			EFWOO01006AB	1.7E-02	(HE) FAIL TO CHANGEOVER EFW PIT
			RSSTMRP001C	5.0E-03	RHS-MHX-001C (C-CS/RHR HX) TEST & MAINTENANCE
			SWSTMPE001D	1.2E-02	EWS-MPP-001D (D-ESW PUMP) TEST & MAINTENANCE
9	8.1E-07	0.99	!16PLOCW_IF	1.0E+00	PARTIAL LOSS OF COMPONENT COOLING WATER
			EFWOO01006AB	1.7E-02	(HE) FAIL TO CHANGEOVER EFW PIT
			RSSTMPI001C	4.0E-03	RHS-MPP-001C (C-CS/RHR PUMP) TEST & MAINTENANCE
			SWSTMPE001D	1.2E-02	EWS-MPP-001D (D-ESW PUMP) TEST & MAINTENANCE
10	8.1E-07	0.99	!16PLOCW_IF	1.0E+00	PARTIAL LOSS OF COMPONENT COOLING WATER
			EFWOO01006AB	1.7E-02	(HE) FAIL TO CHANGEOVER EFW PIT
			HPITMPI001C	4.0E-03	SIS-MPP-001C (C-SI PUMP) TEST & MAINTENANCE
			SWSTMPE001D	1.2E-02	EWS-MPP-001D (D-ESW PUMP) TEST & MAINTENANCE

Table 19.1-70 Internal Flood PRA Dominant Cutsets (Sheet 27 of 70)

Flood Source : FA2-112-01 12th Dominant Scenario of CDF

Categories of loss-of-fluid events : Major Flood

No.	Cut Sets Freq. (/ry)	Percent	Cutsets	Frequency/ Probability	Description
1	4.3E-05	52.9	!16PLOCW_IF	1.0E+00	PARTIAL LOSS OF COMPONENT COOLING WATER
			EFWOO01006AB	1.7E-02	(HE) FAIL TO CHANGEOVER EFW PIT
			HPIOO02FWBD-S	2.6E-03	(HE) FAIL TO OPEN SAFETY DEPRESSURIZATION VALVE
2	2.1E-06	2.6	!16PLOCW_IF	1.0E+00	PARTIAL LOSS OF COMPONENT COOLING WATER
			EFWOO01006AB	1.7E-02	(HE) FAIL TO CHANGEOVER EFW PIT
			PZRCF2MVOD117-ALL	1.3E-04	RCS-MOV-117A,B FAIL TO OPEN (CCF)
3	1.9E-06	2.3	!16PLOCW_IF	1.0E+00	PARTIAL LOSS OF COMPONENT COOLING WATER
			EFWOO01006AB	1.7E-02	(HE) FAIL TO CHANGEOVER EFW PIT
			HPICF4PMAD001-ALL	1.1E-04	SIS-MPP-001A,B,C,D (SI PUMP) FAIL TO START (CCF)
4	1.8E-06	2.2	!16PLOCW_IF	1.0E+00	PARTIAL LOSS OF COMPONENT COOLING WATER
			EFWXVOD006B	7.0E-04	EFS-VLV-006B FAIL TO OPEN
			HPIOO02FWBD-S	2.6E-03	(HE) FAIL TO OPEN SAFETY DEPRESSURIZATION VALVE
5	1.8E-06	2.2	!16PLOCW_IF	1.0E+00	PARTIAL LOSS OF COMPONENT COOLING WATER
			EFWXVCD007B	7.0E-04	EFS-VLV-007B FAIL TO CLOSE
			HPIOO02FWBD-S	2.6E-03	(HE) FAIL TO OPEN SAFETY DEPRESSURIZATION VALVE
6	1.4E-06	1.7	!16PLOCW_IF	1.0E+00	PARTIAL LOSS OF COMPONENT COOLING WATER
			EFWOO01006AB	1.7E-02	(HE) FAIL TO CHANGEOVER EFW PIT
			RSSCF4MVOD145-ALL	8.4E-05	NCS-MOV-145A,B,C,D FAIL TO OPEN (CCF)
7	1.4E-06	1.7	!16PLOCW_IF	1.0E+00	PARTIAL LOSS OF COMPONENT COOLING WATER
			EFWOO01006AB	1.7E-02	(HE) FAIL TO CHANGEOVER EFW PIT
			RSSCF4MVOD004-ALL	8.4E-05	CSS-MOV-004A,B,C,D FAIL TO OPEN (CCF)

Table 19.1-70 Internal Flood PRA Dominant Cutsets (Sheet 28 of 70)

Flood Source : FA2-112-01 12th Dominant Scenario of CDF

Categories of loss-of-fluid events : Major Flood

No.	Cut Sets Freq. (/ry)	Percent	Cutsets	Frequency/ Probability	Description
8	1.0E-06	1.2	!16PLOCW_IF	1.0E+00	PARTIAL LOSS OF COMPONENT COOLING WATER
			EFWOO01006AB	1.7E-02	(HE) FAIL TO CHANGEOVER EFW PIT
			RSSTMRP001C	5.0E-03	RHS-MHX-001C (C-CS/RHR HX) TEST & MAINTENANCE
			SWSTMPE001D	1.2E-02	EWS-MPP-001D (D-ESW PUMP) TEST & MAINTENANCE
9	8.1E-07	0.99	!16PLOCW_IF	1.0E+00	PARTIAL LOSS OF COMPONENT COOLING WATER
			EFWOO01006AB	1.7E-02	(HE) FAIL TO CHANGEOVER EFW PIT
			RSSTMPI001C	4.0E-03	RHS-MPP-001C (C-CS/RHR PUMP) TEST & MAINTENANCE
			SWSTMPE001D	1.2E-02	EWS-MPP-001D (D-ESW PUMP) TEST & MAINTENANCE
10	8.1E-07	0.99	!16PLOCW_IF	1.0E+00	PARTIAL LOSS OF COMPONENT COOLING WATER
			EFWOO01006AB	1.7E-02	(HE) FAIL TO CHANGEOVER EFW PIT
			HPITMPI001C	4.0E-03	SIS-MPP-001C (C-SI PUMP) TEST & MAINTENANCE
			SWSTMPE001D	1.2E-02	EWS-MPP-001D (D-ESW PUMP) TEST & MAINTENANCE

Table 19.1-70 Internal Flood PRA Dominant Cutsets (Sheet 29 of 70)

Flood Source : FA3-114-01 13th Dominant Scenario of CDF

Categories of loss-of-fluid events : Major Flood

No.	Cut Sets Freq. (/ry)	Percent	Cutsets	Frequency/ Probability	Description
1	4.3E-05	51.5	!16PLOCW_IF	1.0E+00	PARTIAL LOSS OF COMPONENT COOLING WATER
			EFWOO01006AB	1.7E-02	(HE) FAIL TO CHANGEOVER EFW PIT
			HPIOO02FWBD-S	2.6E-03	(HE) FAIL TO OPEN SAFETY DEPRESSURIZATION VALVE
2	2.1E-06	2.5	!16PLOCW_IF	1.0E+00	PARTIAL LOSS OF COMPONENT COOLING WATER
			EFWOO01006AB	1.7E-02	(HE) FAIL TO CHANGEOVER EFW PIT
			PZRCF2MVOD117-ALL	1.3E-04	RCS-MOV-117A,B FAIL TO OPEN (CCF)
3	1.9E-06	2.3	!16PLOCW_IF	1.0E+00	PARTIAL LOSS OF COMPONENT COOLING WATER
			EFWOO01006AB	1.7E-02	(HE) FAIL TO CHANGEOVER EFW PIT
			HPICF4PMAD001-ALL	1.1E-04	SIS-MPP-001A,B,C,D (SI PUMP) FAIL TO START (CCF)
4	1.8E-06	2.1	!16PLOCW_IF	1.0E+00	PARTIAL LOSS OF COMPONENT COOLING WATER
			EFWXVOD006B	7.0E-04	EFS-VLV-006B FAIL TO OPEN
			HPIOO02FWBD-S	2.6E-03	(HE) FAIL TO OPEN SAFETY DEPRESSURIZATION VALVE
5	1.8E-06	2.1	!16PLOCW_IF	1.0E+00	PARTIAL LOSS OF COMPONENT COOLING WATER
			EFWXVCD007B	7.0E-04	EFS-VLV-007B FAIL TO CLOSE
			HPIOO02FWBD-S	2.6E-03	(HE) FAIL TO OPEN SAFETY DEPRESSURIZATION VALVE
6	1.4E-06	1.7	!16PLOCW_IF	1.0E+00	PARTIAL LOSS OF COMPONENT COOLING WATER
			EFWOO01006AB	1.7E-02	(HE) FAIL TO CHANGEOVER EFW PIT
			RSSCF4MVOD145-ALL	8.4E-05	NCS-MOV-145A,B,C,D FAIL TO OPEN (CCF)
7	1.4E-06	1.7	!16PLOCW_IF	1.0E+00	PARTIAL LOSS OF COMPONENT COOLING WATER
			EFWOO01006AB	1.7E-02	(HE) FAIL TO CHANGEOVER EFW PIT
			RSSCF4MVOD004-ALL	8.4E-05	CSS-MOV-004A,B,C,D FAIL TO OPEN (CCF)

Table 19.1-70 Internal Flood PRA Dominant Cutsets (Sheet 30 of 70)

Flood Source : FA3-114-01 13th Dominant Scenario of CDF

Categories of loss-of-fluid events : Major Flood

No.	Cut Sets Freq. (/ry)	Percent	Cutsets	Frequency/ Probability	Description
8	1.0E-06	1.2	!16PLOCW_IF	1.0E+00	PARTIAL LOSS OF COMPONENT COOLING WATER
			EFWOO01006AB	1.7E-02	(HE) FAIL TO CHANGEOVER EFW PIT
			RSSTMRP001C	5.0E-03	RHS-MHX-001C (C-CS/RHR HX) TEST & MAINTENANCE
			SWSTMPE001D	1.2E-02	EWS-MPP-001D (D-ESW PUMP) TEST & MAINTENANCE
9	8.1E-07	0.96	!16PLOCW_IF	1.0E+00	PARTIAL LOSS OF COMPONENT COOLING WATER
			EFWOO01006AB	1.7E-02	(HE) FAIL TO CHANGEOVER EFW PIT
			HPITMPI001C	4.0E-03	SIS-MPP-001C (C-SI PUMP) TEST & MAINTENANCE
			SWSTMPE001D	1.2E-02	EWS-MPP-001D (D-ESW PUMP) TEST & MAINTENANCE
10	8.1E-07	0.96	!16PLOCW_IF	1.0E+00	PARTIAL LOSS OF COMPONENT COOLING WATER
			EFWOO01006AB	1.7E-02	(HE) FAIL TO CHANGEOVER EFW PIT
			RSSTMPI001C	4.0E-03	RHS-MPP-001C (C-CS/RHR PUMP) TEST & MAINTENANCE
			SWSTMPE001D	1.2E-02	EWS-MPP-001D (D-ESW PUMP) TEST & MAINTENANCE

Table 19.1-70 Internal Flood PRA Dominant Cutsets (Sheet 31 of 70)

Flood Source : FA2-102-01 14th Dominant Scenario of CDF

Categories of loss-of-fluid events : Flood

No.	Cut Sets Freq. (/ry)	Percent	Cutsets	Frequency/ Probability	Description
1	4.3E-05	64.5	!16PLOCW_IF	1.0E+00	PARTIAL LOSS OF COMPONENT COOLING WATER
			EFWOO01006AB	1.7E-02	(HE) FAIL TO CHANGEOVER EFW PIT
			HPIOO02FWBD-S	2.6E-03	(HE) FAIL TO OPEN SAFETY DEPRESSURIZATION VALVE
2	2.1E-06	3.2	!16PLOCW_IF	1.0E+00	PARTIAL LOSS OF COMPONENT COOLING WATER
			EFWOO01006AB	1.7E-02	(HE) FAIL TO CHANGEOVER EFW PIT
			PZRCF2MVOD117-ALL	1.3E-04	RCS-MOV-117A,B FAIL TO OPEN (CCF)
3	1.9E-06	2.8	!16PLOCW_IF	1.0E+00	PARTIAL LOSS OF COMPONENT COOLING WATER
			EFWOO01006AB	1.7E-02	(HE) FAIL TO CHANGEOVER EFW PIT
			HPICF4PMAD001-ALL	1.1E-04	SIS-MPP-001A,B,C,D (SI PUMP) FAIL TO START (CCF)
4	1.8E-06	2.7	!16PLOCW_IF	1.0E+00	PARTIAL LOSS OF COMPONENT COOLING WATER
			EFWXVCD007B	7.0E-04	EFS-VLV-007B FAIL TO CLOSE
			HPIOO02FWBD-S	2.6E-03	(HE) FAIL TO OPEN SAFETY DEPRESSURIZATION VALVE
5	1.8E-06	2.7	!16PLOCW_IF	1.0E+00	PARTIAL LOSS OF COMPONENT COOLING WATER
			EFWXVOD006B	7.0E-04	EFS-VLV-006B FAIL TO OPEN
			HPIOO02FWBD-S	2.6E-03	(HE) FAIL TO OPEN SAFETY DEPRESSURIZATION VALVE
6	8.1E-07	1.2	!16PLOCW_IF	1.0E+00	PARTIAL LOSS OF COMPONENT COOLING WATER
			EFWOO01006AB	1.7E-02	(HE) FAIL TO CHANGEOVER EFW PIT
			HPITMPI001C	4.0E-03	SIS-MPP-001C (C-SI PUMP) TEST & MAINTENANCE
			SWSTMPE001D	1.2E-02	EWS-MPP-001D (D-ESW PUMP) TEST & MAINTENANCE

Table 19.1-70 Internal Flood PRA Dominant Cutsets (Sheet 32 of 70)

Flood Source : FA2-102-01 14th Dominant Scenario of CDF

Categories of loss-of-fluid events : Flood

No.	Cut Sets Freq. (/ry)	Percent	Cutsets	Frequency/ Probability	Description
7	5.7E-07	0.86	!16PLOCW_IF	1.0E+00	PARTIAL LOSS OF COMPONENT COOLING WATER
			RCP----SEAL	1.0E+00	RCP SEAL LOCA
			SGNBTSWCCF2	1.0E-05	GROUP-2 APPLICATION SOFTWARE CCF
			SGNOO01S	5.7E-02	(HE) FAIL TO START SAFETY INJECTION PUMP BY DAS
8	4.7E-07	0.71	!16PLOCW_IF	1.0E+00	PARTIAL LOSS OF COMPONENT COOLING WATER
			CWSTMRC001D	7.0E-03	NCS-MHX-001D (D-CCW HX) TEST & MAINTENANCE
			EFWOO01006AB	1.7E-02	(HE) FAIL TO CHANGEOVER EFW PIT
			HPITMPI001C	4.0E-03	SIS-MPP-001C (C-SI PUMP) TEST & MAINTENANCE
9	4.1E-07	0.60	!16PLOCW_IF	1.0E+00	PARTIAL LOSS OF COMPONENT COOLING WATER
			CWSTMPC001D	6.0E-03	NCS-MPP-001D (D-CCW PUMP) TEST & MAINTENANCE
			EFWOO01006AB	1.7E-02	(HE) FAIL TO CHANGEOVER EFW PIT
			HPITMPI001C	4.0E-03	SIS-MPP-001C (C-SI PUMP) TEST & MAINTENANCE
10	3.6E-07	0.54	!16PLOCW_IF	1.0E+00	PARTIAL LOSS OF COMPONENT COOLING WATER
			EFWOO01006AB	1.7E-02	(HE) FAIL TO CHANGEOVER EFW PIT
			HPICF4PMAD001-23	2.2E-05	SIS-MPP-001C,D (SI PUMP) FAIL TO START (CCF)

Table 19.1-70 Internal Flood PRA Dominant Cutsets (Sheet 33 of 70)

Flood Source : FA2-507-01 15th Dominant Scenario of CDF

Categories of loss-of-fluid events : Major Flood

No.	Cut Sets Freq. (/ry)	Percent	Cutsets	Frequency/ Probability	Description
1	4.3E-05	41.2	!16PLOCW_IF	1.0E+00	PARTIAL LOSS OF COMPONENT COOLING WATER
			EFWOO01006AB	1.7E-02	(HE) FAIL TO CHANGEOVER EFW PIT
			HPIOO02FWBD-S	2.6E-03	(HE) FAIL TO OPEN SAFETY DEPRESSURIZATION VALVE
2	1.5E-05	14.1	!16PLOCW_IF	1.0E+00	PARTIAL LOSS OF COMPONENT COOLING WATER
			EFWOO01006AB	1.7E-02	(HE) FAIL TO CHANGEOVER EFW PIT
			PZRMVOD117B	8.7E-04	RCS-MOV-117B FAIL TO OPEN
3	2.1E-06	2.0	!16PLOCW_IF	1.0E+00	PARTIAL LOSS OF COMPONENT COOLING WATER
			EFWOO01006AB	1.7E-02	(HE) FAIL TO CHANGEOVER EFW PIT
			PZRCF2MVOD117-ALL	1.3E-04	RCS-MOV-117A,B FAIL TO OPEN (CCF)
4	1.9E-06	1.8	!16PLOCW_IF	1.0E+00	PARTIAL LOSS OF COMPONENT COOLING WATER
			EFWOO01006AB	1.7E-02	(HE) FAIL TO CHANGEOVER EFW PIT
			HPICF4PMAD001-ALL	1.1E-04	SIS-MPP-001A,B,C,D (SI PUMP) FAIL TO START (CCF)
5	1.8E-06	1.7	!16PLOCW_IF	1.0E+00	PARTIAL LOSS OF COMPONENT COOLING WATER
			EFWXVOD006B	7.0E-04	EFS-VLV-006B FAIL TO OPEN
			HPIOO02FWBD-S	2.6E-03	(HE) FAIL TO OPEN SAFETY DEPRESSURIZATION VALVE
6	1.8E-06	1.7	!16PLOCW_IF	1.0E+00	PARTIAL LOSS OF COMPONENT COOLING WATER
			EFWXVCD007B	7.0E-04	EFS-VLV-007B FAIL TO CLOSE
			HPIOO02FWBD-S	2.6E-03	(HE) FAIL TO OPEN SAFETY DEPRESSURIZATION VALVE

Table 19.1-70 Internal Flood PRA Dominant Cutsets (Sheet 34 of 70)

Flood Source : FA2-507-01 15th Dominant Scenario of CDF

Categories of loss-of-fluid events : Major Flood

No.	Cut Sets Freq. (/ry)	Percent	Cutsets	Frequency/ Probability	Description
7	1.4E-06	1.4	!16PLOCW_IF	1.0E+00	PARTIAL LOSS OF COMPONENT COOLING WATER
			EFWOO01006AB	1.7E-02	(HE) FAIL TO CHANGEOVER EFW PIT
			RSSCF4MVOD004-ALL	8.4E-05	CSS-MOV-004A,B,C,D FAIL TO OPEN (CCF)
8	1.4E-06	1.4	!16PLOCW_IF	1.0E+00	PARTIAL LOSS OF COMPONENT COOLING WATER
			EFWOO01006AB	1.7E-02	(HE) FAIL TO CHANGEOVER EFW PIT
			RSSCF4MVOD145-ALL	8.4E-05	NCS-MOV-145A,B,C,D FAIL TO OPEN (CCF)
9	1.0E-06	0.96	!16PLOCW_IF	1.0E+00	PARTIAL LOSS OF COMPONENT COOLING WATER
			EFWOO01006AB	1.7E-02	(HE) FAIL TO CHANGEOVER EFW PIT
			RSSTMRP001C	5.0E-03	RHS-MHX-001C (C-CS/RHR HX) TEST & MAINTENANCE
			SWSTMPE001D	1.2E-02	EWS-MPP-001D (D-ESW PUMP) TEST & MAINTENANCE
10	8.1E-07	0.77	!16PLOCW_IF	1.0E+00	PARTIAL LOSS OF COMPONENT COOLING WATER
			EFWOO01006AB	1.7E-02	(HE) FAIL TO CHANGEOVER EFW PIT
			HPITMPI001C	4.0E-03	SIS-MPP-001C (C-SI PUMP) TEST & MAINTENANCE
			SWSTMPE001D	1.2E-02	EWS-MPP-001D (D-ESW PUMP) TEST & MAINTENANCE

Table 19.1-70 Internal Flood PRA Dominant Cutsets (Sheet 35 of 70)

Flood Source : FA2-103-01 16th Dominant Scenario of CDF

Categories of loss-of-fluid events : Major Flood

No.	Cut Sets Freq. (/ry)	Percent	Cutsets	Frequency/ Probability	Description
1	4.3E-05	64.5	!16PLOCW_IF	1.0E+00	PARTIAL LOSS OF COMPONENT COOLING WATER
			EFWOO01006AB	1.7E-02	(HE) FAIL TO CHANGEOVER EFW PIT
			HPIOO02FWBD-S	2.6E-03	(HE) FAIL TO OPEN SAFETY DEPRESSURIZATION VALVE
2	2.1E-06	3.2	!16PLOCW_IF	1.0E+00	PARTIAL LOSS OF COMPONENT COOLING WATER
			EFWOO01006AB	1.7E-02	(HE) FAIL TO CHANGEOVER EFW PIT
			PZRCF2MVOD117-ALL	1.3E-04	RCS-MOV-117A,B FAIL TO OPEN (CCF)
3	1.9E-06	2.8	!16PLOCW_IF	1.0E+00	PARTIAL LOSS OF COMPONENT COOLING WATER
			EFWOO01006AB	1.7E-02	(HE) FAIL TO CHANGEOVER EFW PIT
			HPICF4PMAD001-ALL	1.1E-04	SIS-MPP-001A,B,C,D (SI PUMP) FAIL TO START (CCF)
4	1.8E-06	2.7	!16PLOCW_IF	1.0E+00	PARTIAL LOSS OF COMPONENT COOLING WATER
			EFWXVCD007B	7.0E-04	EFS-VLV-007B FAIL TO CLOSE
			HPIOO02FWBD-S	2.6E-03	(HE) FAIL TO OPEN SAFETY DEPRESSURIZATION VALVE
5	1.8E-06	2.7	!16PLOCW_IF	1.0E+00	PARTIAL LOSS OF COMPONENT COOLING WATER
			EFWXVOD006B	7.0E-04	EFS-VLV-006B FAIL TO OPEN
			HPIOO02FWBD-S	2.6E-03	(HE) FAIL TO OPEN SAFETY DEPRESSURIZATION VALVE
6	8.1E-07	1.2	!16PLOCW_IF	1.0E+00	PARTIAL LOSS OF COMPONENT COOLING WATER
			EFWOO01006AB	1.7E-02	(HE) FAIL TO CHANGEOVER EFW PIT
			HPITMPI001C	4.0E-03	SIS-MPP-001C (C-SI PUMP) TEST & MAINTENANCE
			SWSTMPE001D	1.2E-02	EWS-MPP-001D (D-ESW PUMP) TEST & MAINTENANCE

Table 19.1-70 Internal Flood PRA Dominant Cutsets (Sheet 36 of 70)

Flood Source : FA2-103-01 16th Dominant Scenario of CDF

Categories of loss-of-fluid events : Major Flood

No.	Cut Sets Freq. (/ry)	Percent	Cutsets	Frequency/ Probability	Description
7	5.7E-07	0.86	!16PLOCW_IF	1.0E+00	PARTIAL LOSS OF COMPONENT COOLING WATER
			RCP----SEAL	1.0E+00	RCP SEAL LOCA
			SGNBTSWCCF2	1.0E-05	GROUP-2 APPLICATION SOFTWARE CCF
			SGNOO01S	5.7E-02	(HE) FAIL TO START SAFETY INJECTION PUMP BY DAS
8	4.7E-07	0.71	!16PLOCW_IF	1.0E+00	PARTIAL LOSS OF COMPONENT COOLING WATER
			CWSTMRC001D	7.0E-03	NCS-MHX-001D (D-CCW HX) TEST & MAINTENANCE
			EFWOO01006AB	1.7E-02	(HE) FAIL TO CHANGEOVER EFW PIT
			HPITMPI001C	4.0E-03	SIS-MPP-001C (C-SI PUMP) TEST & MAINTENANCE
9	4.1E-07	0.60	!16PLOCW_IF	1.0E+00	PARTIAL LOSS OF COMPONENT COOLING WATER
			CWSTMPC001D	6.0E-03	NCS-MPP-001D (D-CCW PUMP) TEST & MAINTENANCE
			EFWOO01006AB	1.7E-02	(HE) FAIL TO CHANGEOVER EFW PIT
			HPITMPI001C	4.0E-03	SIS-MPP-001C (C-SI PUMP) TEST & MAINTENANCE
10	3.6E-07	0.54	!16PLOCW_IF	1.0E+00	PARTIAL LOSS OF COMPONENT COOLING WATER
			EFWOO01006AB	1.7E-02	(HE) FAIL TO CHANGEOVER EFW PIT
			HPICF4PMAD001-23	2.2E-05	SIS-MPP-001C,D (SI PUMP) FAIL TO START (CCF)

Table 19.1-70 Internal Flood PRA Dominant Cutsets (Sheet 37 of 70)

Flood Source : FA2-509-01 17th Dominant Scenario of CDF

Categories of loss-of-fluid events : Major Flood

No.	Cut Sets Freq. (/ry)	Percent	Cutsets	Frequency/ Probability	Description
1	4.3E-05	51.5	!16PLOCW_IF	1.0E+00	PARTIAL LOSS OF COMPONENT COOLING WATER
			EFWOO01006AB	1.7E-02	(HE) FAIL TO CHANGEOVER EFW PIT
			HPIOO02FWBD-S	2.6E-03	(HE) FAIL TO OPEN SAFETY DEPRESSURIZATION VALVE
2	2.1E-06	2.5	!16PLOCW_IF	1.0E+00	PARTIAL LOSS OF COMPONENT COOLING WATER
			EFWOO01006AB	1.7E-02	(HE) FAIL TO CHANGEOVER EFW PIT
			PZRCF2MVOD117-ALL	1.3E-04	RCS-MOV-117A,B FAIL TO OPEN (CCF)
3	1.9E-06	2.3	!16PLOCW_IF	1.0E+00	PARTIAL LOSS OF COMPONENT COOLING WATER
			EFWOO01006AB	1.7E-02	(HE) FAIL TO CHANGEOVER EFW PIT
			HPICF4PMAD001-ALL	1.1E-04	SIS-MPP-001A,B,C,D (SI PUMP) FAIL TO START (CCF)
4	1.8E-06	2.1	!16PLOCW_IF	1.0E+00	PARTIAL LOSS OF COMPONENT COOLING WATER
			EFWXVOD006B	7.0E-04	EFS-VLV-006B FAIL TO OPEN
			HPIOO02FWBD-S	2.6E-03	(HE) FAIL TO OPEN SAFETY DEPRESSURIZATION VALVE
5	1.8E-06	2.1	!16PLOCW_IF	1.0E+00	PARTIAL LOSS OF COMPONENT COOLING WATER
			EFWXVCD007B	7.0E-04	EFS-VLV-007B FAIL TO CLOSE
			HPIOO02FWBD-S	2.6E-03	(HE) FAIL TO OPEN SAFETY DEPRESSURIZATION VALVE
6	1.4E-06	1.7	!16PLOCW_IF	1.0E+00	PARTIAL LOSS OF COMPONENT COOLING WATER
			EFWOO01006AB	1.7E-02	(HE) FAIL TO CHANGEOVER EFW PIT
			RSSCF4MVOD145-ALL	8.4E-05	NCS-MOV-145A,B,C,D FAIL TO OPEN (CCF)

Table 19.1-70 Internal Flood PRA Dominant Cutsets (Sheet 38 of 70)

Flood Source : FA2-509-01 17th Dominant Scenario of CDF

Categories of loss-of-fluid events : Major Flood

No.	Cut Sets Freq. (/ry)	Percent	Cutsets	Frequency/ Probability	Description
7	1.4E-06	1.7	!16PLOCW_IF	1.0E+00	PARTIAL LOSS OF COMPONENT COOLING WATER
			EFWOO01006AB	1.7E-02	(HE) FAIL TO CHANGEOVER EFW PIT
			RSSCF4MVOD004-ALL	8.4E-05	CSS-MOV-004A,B,C,D FAIL TO OPEN (CCF)
8	1.0E-06	1.2	!16PLOCW_IF	1.0E+00	PARTIAL LOSS OF COMPONENT COOLING WATER
			EFWOO01006AB	1.7E-02	(HE) FAIL TO CHANGEOVER EFW PIT
			RSSTMRP001C	5.0E-03	RHS-MHX-001C (C-CS/RHR HX) TEST & MAINTENANCE
			SWSTMPE001D	1.2E-02	EWS-MPP-001D (D-ESW PUMP) TEST & MAINTENANCE
9	8.1E-07	0.97	!16PLOCW_IF	1.0E+00	PARTIAL LOSS OF COMPONENT COOLING WATER
			EFWOO01006AB	1.7E-02	(HE) FAIL TO CHANGEOVER EFW PIT
			HPITMPI001C	4.0E-03	SIS-MPP-001C (C-SI PUMP) TEST & MAINTENANCE
			SWSTMPE001D	1.2E-02	EWS-MPP-001D (D-ESW PUMP) TEST & MAINTENANCE
10	8.1E-07	0.97	!16PLOCW_IF	1.0E+00	PARTIAL LOSS OF COMPONENT COOLING WATER
			EFWOO01006AB	1.7E-02	(HE) FAIL TO CHANGEOVER EFW PIT
			RSSTMPI001C	4.0E-03	RHS-MPP-001C (C-CS/RHR PUMP) TEST & MAINTENANCE
			SWSTMPE001D	1.2E-02	EWS-MPP-001D (D-ESW PUMP) TEST & MAINTENANCE

Table 19.1-70 Internal Flood PRA Dominant Cutsets (Sheet 39 of 70)

Flood Source : FA2-420-01 18th Dominant Scenario of CDF

Categories of loss-of-fluid events : Major Flood

No.	Cut Sets Freq. (/ry)	Percent	Cutsets	Frequency/ Probability	Description
1	4.3E-05	62.2	!16PLOCW_IF	1.0E+00	PARTIAL LOSS OF COMPONENT COOLING WATER
			EFWOO01006AB	1.7E-02	(HE) FAIL TO CHANGEOVER EFW PIT
			HPIOO02FWBD-S	2.6E-03	(HE) FAIL TO OPEN SAFETY DEPRESSURIZATION VALVE
2	2.1E-06	3.1	!16PLOCW_IF	1.0E+00	PARTIAL LOSS OF COMPONENT COOLING WATER
			EFWOO01006AB	1.7E-02	(HE) FAIL TO CHANGEOVER EFW PIT
			PZRCF2MVOD117-ALL	1.3E-04	RCS-MOV-117A,B FAIL TO OPEN (CCF)
3	1.9E-06	2.7	!16PLOCW_IF	1.0E+00	PARTIAL LOSS OF COMPONENT COOLING WATER
			EFWOO01006AB	1.7E-02	(HE) FAIL TO CHANGEOVER EFW PIT
			HPICF4PMAD001-ALL	1.1E-04	SIS-MPP-001A,B,C,D (SI PUMP) FAIL TO START (CCF)
4	1.8E-06	2.6	!16PLOCW_IF	1.0E+00	PARTIAL LOSS OF COMPONENT COOLING WATER
			EFWXVOD006B	7.0E-04	EFS-VLV-006B FAIL TO OPEN
			HPIOO02FWBD-S	2.6E-03	(HE) FAIL TO OPEN SAFETY DEPRESSURIZATION VALVE
5	1.8E-06	2.6	!16PLOCW_IF	1.0E+00	PARTIAL LOSS OF COMPONENT COOLING WATER
			EFWXVCD007B	7.0E-04	EFS-VLV-007B FAIL TO CLOSE
			HPIOO02FWBD-S	2.6E-03	(HE) FAIL TO OPEN SAFETY DEPRESSURIZATION VALVE
6	8.1E-07	1.2	!16PLOCW_IF	1.0E+00	PARTIAL LOSS OF COMPONENT COOLING WATER
			EFWOO01006AB	1.7E-02	(HE) FAIL TO CHANGEOVER EFW PIT
			HPITMPI001C	4.0E-03	SIS-MPP-001C (C-SI PUMP) TEST & MAINTENANCE
			SWSTMPE001D	1.2E-02	EWS-MPP-001D (D-ESW PUMP) TEST & MAINTENANCE
7	5.7E-07	0.83	!16PLOCW_IF	1.0E+00	PARTIAL LOSS OF COMPONENT COOLING WATER
			RCP----SEAL	1.0E+00	RCP SEAL LOCA
			SGNBTSWCCF2	1.0E-05	GROUP-2 APPLICATION SOFTWARE CCF
			SGNOO01S	5.7E-02	(HE) FAIL TO START SAFETY INJECTION PUMP BY DAS

Table 19.1-70 Internal Flood PRA Dominant Cutsets (Sheet 40 of 70)

Flood Source : FA2-420-01 18th Dominant Scenario of CDF

Categories of loss-of-fluid events : Major Flood

No.	Cut Sets Freq. (/ry)	Percent	Cutsets	Frequency/ Probability	Description
8	4.7E-07	0.68	!16PLOCW_IF	1.0E+00	PARTIAL LOSS OF COMPONENT COOLING WATER
			CWSTMRC001D	7.0E-03	NCS-MHX-001D (D-CCW HX) TEST & MAINTENANCE
			EFWOO01006AB	1.7E-02	(HE) FAIL TO CHANGEOVER EFW PIT
			HPITMPI001C	4.0E-03	SIS-MPP-001C (C-SI PUMP) TEST & MAINTENANCE
9	4.1E-07	0.58	!16PLOCW_IF	1.0E+00	PARTIAL LOSS OF COMPONENT COOLING WATER
			CWSTMPC001D	6.0E-03	NCS-MPP-001D (D-CCW PUMP) TEST & MAINTENANCE
			EFWOO01006AB	1.7E-02	(HE) FAIL TO CHANGEOVER EFW PIT
			HPITMPI001C	4.0E-03	SIS-MPP-001C (C-SI PUMP) TEST & MAINTENANCE
10	3.6E-07	0.52	!16PLOCW_IF	1.0E+00	PARTIAL LOSS OF COMPONENT COOLING WATER
			EFWOO01006AB	1.7E-02	(HE) FAIL TO CHANGEOVER EFW PIT
			HPICF4PMAD001-23	2.2E-05	SIS-MPP-001C,D (SI PUMP) FAIL TO START (CCF)

Table 19.1-70 Internal Flood PRA Dominant Cutsets (Sheet 41 of 70)

Flood Source : FA2-423-01 19th Dominant Scenario of CDF

Categories of loss-of-fluid events : Major Flood

No.	Cut Sets Freq. (/ry)	Percent	Cutsets	Frequency/ Probability	Description
1	4.3E-05	51.5	!16PLOCW_IF	1.0E+00	PARTIAL LOSS OF COMPONENT COOLING WATER
			EFWOO01006AB	1.7E-02	(HE) FAIL TO CHANGEOVER EFW PIT
			HPIOO02FWBD-S	2.6E-03	(HE) FAIL TO OPEN SAFETY DEPRESSURIZATION VALVE
2	2.1E-06	2.5	!16PLOCW_IF	1.0E+00	PARTIAL LOSS OF COMPONENT COOLING WATER
			EFWOO01006AB	1.7E-02	(HE) FAIL TO CHANGEOVER EFW PIT
			PZRCF2MVOD117-ALL	1.3E-04	RCS-MOV-117A,B FAIL TO OPEN (CCF)
3	1.9E-06	2.3	!16PLOCW_IF	1.0E+00	PARTIAL LOSS OF COMPONENT COOLING WATER
			EFWOO01006AB	1.7E-02	(HE) FAIL TO CHANGEOVER EFW PIT
			HPICF4PMAD001-ALL	1.1E-04	SIS-MPP-001A,B,C,D (SI PUMP) FAIL TO START (CCF)
4	1.8E-06	2.1	!16PLOCW_IF	1.0E+00	PARTIAL LOSS OF COMPONENT COOLING WATER
			EFWXVOD006B	7.0E-04	EFS-VLV-006B FAIL TO OPEN
			HPIOO02FWBD-S	2.6E-03	(HE) FAIL TO OPEN SAFETY DEPRESSURIZATION VALVE
5	1.8E-06	2.1	!16PLOCW_IF	1.0E+00	PARTIAL LOSS OF COMPONENT COOLING WATER
			EFWXVCD007B	7.0E-04	EFS-VLV-007B FAIL TO CLOSE
			HPIOO02FWBD-S	2.6E-03	(HE) FAIL TO OPEN SAFETY DEPRESSURIZATION VALVE
6	1.4E-06	1.7	!16PLOCW_IF	1.0E+00	PARTIAL LOSS OF COMPONENT COOLING WATER
			EFWOO01006AB	1.7E-02	(HE) FAIL TO CHANGEOVER EFW PIT
			RSSCF4MVOD145-ALL	8.4E-05	NCS-MOV-145A,B,C,D FAIL TO OPEN (CCF)
7	1.4E-06	1.7	!16PLOCW_IF	1.0E+00	PARTIAL LOSS OF COMPONENT COOLING WATER
			EFWOO01006AB	1.7E-02	(HE) FAIL TO CHANGEOVER EFW PIT
			RSSCF4MVOD004-ALL	8.4E-05	CSS-MOV-004A,B,C,D FAIL TO OPEN (CCF)

Table 19.1-70 Internal Flood PRA Dominant Cutsets (Sheet 42 of 70)

Flood Source : FA2-423-01 19th Dominant Scenario of CDF

Categories of loss-of-fluid events : Major Flood

No.	Cut Sets Freq. (/ry)	Percent	Cutsets	Frequency/ Probability	Description
8	1.0E-06	1.2	!16PLOCW_IF	1.0E+00	PARTIAL LOSS OF COMPONENT COOLING WATER
			EFWOO01006AB	1.7E-02	(HE) FAIL TO CHANGEOVER EFW PIT
			RSSTMRP001C	5.0E-03	RHS-MHX-001C (C-CS/RHR HX) TEST & MAINTENANCE
			SWSTMPE001D	1.2E-02	EWS-MPP-001D (D-ESW PUMP) TEST & MAINTENANCE
9	8.1E-07	0.96	!16PLOCW_IF	1.0E+00	PARTIAL LOSS OF COMPONENT COOLING WATER
			EFWOO01006AB	1.7E-02	(HE) FAIL TO CHANGEOVER EFW PIT
			HPITMPI001C	4.0E-03	SIS-MPP-001C (C-SI PUMP) TEST & MAINTENANCE
			SWSTMPE001D	1.2E-02	EWS-MPP-001D (D-ESW PUMP) TEST & MAINTENANCE
10	8.1E-07	0.96	!16PLOCW_IF	1.0E+00	PARTIAL LOSS OF COMPONENT COOLING WATER
			EFWOO01006AB	1.7E-02	(HE) FAIL TO CHANGEOVER EFW PIT
			RSSTMPI001C	4.0E-03	RHS-MPP-001C (C-CS/RHR PUMP) TEST & MAINTENANCE
			SWSTMPE001D	1.2E-02	EWS-MPP-001D (D-ESW PUMP) TEST & MAINTENANCE

Table 19.1-70 Internal Flood PRA Dominant Cutsets (Sheet 43 of 70)

Flood Source : FA2-414-01 20th Dominant Scenario of CDF

Categories of loss-of-fluid events : Spray

No.	Cut Sets Freq. (/ry)	Percent	Cutsets	Frequency/ Probability	Description
1	7.7E-07	9.0	!14LOFF_IF	1.0E+00	LOSS OF FEED WATER FLOW
			EFWOO01006AB	1.7E-02	(HE) FAIL TO CHANGEOVER EFW PIT
			HPIOO02FWBD	3.8E-03	(HE) FAIL TO OPEN SAFETY DEPRESSURIZATION VALVE AND START SAFETY INJECTION PUMP
			SWSTMPE001B	1.2E-02	EWS-MPP-001B (B-ESW PUMP) TEST & MAINTENANCE
2	7.7E-07	9.0	!13TRANS_IF	1.0E+00	GENERAL TRANSIENT
			EFWOO01006AB	1.7E-02	(HE) FAIL TO CHANGEOVER EFW PIT
			HPIOO02FWBD	3.8E-03	(HE) FAIL TO OPEN SAFETY DEPRESSURIZATION VALVE AND START SAFETY INJECTION PUMP
			SWSTMPE001B	1.2E-02	EWS-MPP-001B (B-ESW PUMP) TEST & MAINTENANCE
3	6.4E-07	7.5	!14LOFF_IF	1.0E+00	LOSS OF FEED WATER FLOW
			EFWOO01006AB	1.7E-02	(HE) FAIL TO CHANGEOVER EFW PIT
			HPIOO02FWBD	3.8E-03	(HE) FAIL TO OPEN SAFETY DEPRESSURIZATION VALVE AND START SAFETY INJECTION PUMP
			VCWCHBD001B	1.0E-02	VWS-MEQ-001B (B-ESSENTIAL CHILLER UNIT) FAIL TO START
4	6.4E-07	7.5	!13TRANS_IF	1.0E+00	GENERAL TRANSIENT
			EFWOO01006AB	1.7E-02	(HE) FAIL TO CHANGEOVER EFW PIT
			HPIOO02FWBD	3.8E-03	(HE) FAIL TO OPEN SAFETY DEPRESSURIZATION VALVE AND START SAFETY INJECTION PUMP
			VCWCHBD001B	1.0E-02	VWS-MEQ-001B (B-ESSENTIAL CHILLER UNIT) FAIL TO START

Table 19.1-70 Internal Flood PRA Dominant Cutsets (Sheet 44 of 70)

Flood Source : FA2-414-01 20th Dominant Scenario of CDF

Categories of loss-of-fluid events : Spray

No.	Cut Sets Freq. (/ry)	Percent	Cutsets	Frequency/ Probability	Description
5	5.1E-07	6.0	!13TRANS_IF	1.0E+00	GENERAL TRANSIENT
			EFWOO01006AB	1.7E-02	(HE) FAIL TO CHANGEOVER EFW PIT
			HPIOO02FWBD	3.8E-03	(HE) FAIL TO OPEN SAFETY DEPRESSURIZATION VALVE AND START SAFETY INJECTION PUMP
			VCWTMPZ001B	8.0E-03	VWS-MPP-001B (B-ESSENTIAL CHILLED WATER PUMP) TEST & MAINTENANCE
6	5.1E-07	6.0	!14LOFF_IF	1.0E+00	LOSS OF FEED WATER FLOW
			EFWOO01006AB	1.7E-02	(HE) FAIL TO CHANGEOVER EFW PIT
			HPIOO02FWBD	3.8E-03	(HE) FAIL TO OPEN SAFETY DEPRESSURIZATION VALVE AND START SAFETY INJECTION PUMP
			VCWTMPZ001B	8.0E-03	VWS-MPP-001B (B-ESSENTIAL CHILLED WATER PUMP) TEST & MAINTENANCE
7	2.6E-07	3.0	!13TRANS_IF	1.0E+00	GENERAL TRANSIENT
			EFWOO01006AB	1.7E-02	(HE) FAIL TO CHANGEOVER EFW PIT
			EFWTMPA001B	4.0E-03	EFS-MPP-001B (B-EFW PUMP) TEST & MAINTENANCE
			HPIOO02FWBD	3.8E-03	(HE) FAIL TO OPEN SAFETY DEPRESSURIZATION VALVE AND START SAFETY INJECTION PUMP
8	2.6E-07	3.0	!14LOFF_IF	1.0E+00	LOSS OF FEED WATER FLOW
			EFWOO01006AB	1.7E-02	(HE) FAIL TO CHANGEOVER EFW PIT
			EFWTMPA001B	4.0E-03	EFS-MPP-001B (B-EFW PUMP) TEST & MAINTENANCE
			HPIOO02FWBD	3.8E-03	(HE) FAIL TO OPEN SAFETY DEPRESSURIZATION VALVE AND START SAFETY INJECTION PUMP

Table 19.1-70 Internal Flood PRA Dominant Cutsets (Sheet 45 of 70)

Flood Source : FA2-414-01 20th Dominant Scenario of CDF

Categories of loss-of-fluid events : Spray

No.	Cut Sets Freq. (/ry)	Percent	Cutsets	Frequency/ Probability	Description
9	1.6E-07	1.9	!13TRANS_IF	1.0E+00	GENERAL TRANSIENT
			EFWOO01006AB	1.7E-02	(HE) FAIL TO CHANGEOVER EFW PIT
			HPIOO02FWBD	3.8E-03	(HE) FAIL TO OPEN SAFETY DEPRESSURIZATION VALVE AND START SAFETY INJECTION PUMP
			HVATMAH401B	2.5E-03	VRS-MAH-401B (B-EFW PUMP AIR HANDLING UNIT) TEST & MAINTENANCE
10	1.6E-07	1.9	!14LOFF_IF	1.0E+00	LOSS OF FEED WATER FLOW
			EFWOO01006AB	1.7E-02	(HE) FAIL TO CHANGEOVER EFW PIT
			HPIOO02FWBD	3.8E-03	(HE) FAIL TO OPEN SAFETY DEPRESSURIZATION VALVE AND START SAFETY INJECTION PUMP
			HVATMAH401B	2.5E-03	VRS-MAH-401B (B-EFW PUMP AIR HANDLING UNIT) TEST & MAINTENANCE

Table 19.1-70 Internal Flood PRA Dominant Cutsets (Sheet 46 of 70)

Flood Source : FA2-201-01 21st Dominant Scenario of CDF

Categories of loss-of-fluid events : Major Flood

No.	Cut Sets Freq. (/ry)	Percent	Cutsets	Frequency/ Probability	Description
1	4.3E-05	62.2	!16PLOCW_IF	1.0E+00	PARTIAL LOSS OF COMPONENT COOLING WATER
			EFWOO01006AB	1.7E-02	(HE) FAIL TO CHANGEOVER EFW PIT
			HPIOO02FWBD-S	2.6E-03	(HE) FAIL TO OPEN SAFETY DEPRESSURIZATION VALVE
2	2.1E-06	3.1	!16PLOCW_IF	1.0E+00	PARTIAL LOSS OF COMPONENT COOLING WATER
			EFWOO01006AB	1.7E-02	(HE) FAIL TO CHANGEOVER EFW PIT
			PZRCF2MVOD117-ALL	1.3E-04	RCS-MOV-117A,B FAIL TO OPEN (CCF)
3	1.9E-06	2.7	!16PLOCW_IF	1.0E+00	PARTIAL LOSS OF COMPONENT COOLING WATER
			EFWOO01006AB	1.7E-02	(HE) FAIL TO CHANGEOVER EFW PIT
			HPICF4PMAD001-ALL	1.1E-04	SIS-MPP-001A,B,C,D (SI PUMP) FAIL TO START (CCF)
4	1.8E-06	2.6	!16PLOCW_IF	1.0E+00	PARTIAL LOSS OF COMPONENT COOLING WATER
			EFWXVOD006B	7.0E-04	EFS-VLV-006B FAIL TO OPEN
			HPIOO02FWBD-S	2.6E-03	(HE) FAIL TO OPEN SAFETY DEPRESSURIZATION VALVE
5	1.8E-06	2.6	!16PLOCW_IF	1.0E+00	PARTIAL LOSS OF COMPONENT COOLING WATER
			EFWXVCD007B	7.0E-04	EFS-VLV-007B FAIL TO CLOSE
			HPIOO02FWBD-S	2.6E-03	(HE) FAIL TO OPEN SAFETY DEPRESSURIZATION VALVE
6	8.1E-07	1.2	!16PLOCW_IF	1.0E+00	PARTIAL LOSS OF COMPONENT COOLING WATER
			EFWOO01006AB	1.7E-02	(HE) FAIL TO CHANGEOVER EFW PIT
			HPITMPI001C	4.0E-03	SIS-MPP-001C (C-SI PUMP) TEST & MAINTENANCE
			SWSTMPE001D	1.2E-02	EWS-MPP-001D (D-ESW PUMP) TEST & MAINTENANCE
7	5.7E-07	0.83	!16PLOCW_IF	1.0E+00	PARTIAL LOSS OF COMPONENT COOLING WATER
			RCP----SEAL	1.0E+00	RCP SEAL LOCA
			SGNBTSWCCF2	1.0E-05	GROUP-2 APPLICATION SOFTWARE CCF
			SGNOO01S	5.7E-02	(HE) FAIL TO START SAFETY INJECTION PUMP BY DAS

Table 19.1-70 Internal Flood PRA Dominant Cutsets (Sheet 47 of 70)

Flood Source : FA2-201-01 21st Dominant Scenario of CDF

Categories of loss-of-fluid events : Major Flood

No.	Cut Sets Freq. (/ry)	Percent	Cutsets	Frequency/ Probability	Description
8	4.7E-07	0.68	!16PLOCW_IF	1.0E+00	PARTIAL LOSS OF COMPONENT COOLING WATER
			CWSTMRC001D	7.0E-03	NCS-MHX-001D (D-CCW HX) TEST & MAINTENANCE
			EFWOO01006AB	1.7E-02	(HE) FAIL TO CHANGEOVER EFW PIT
			HPITMPI001C	4.0E-03	SIS-MPP-001C (C-SI PUMP) TEST & MAINTENANCE
9	4.1E-07	0.58	!16PLOCW_IF	1.0E+00	PARTIAL LOSS OF COMPONENT COOLING WATER
			CWSTMPC001D	6.0E-03	NCS-MPP-001D (D-CCW PUMP) TEST & MAINTENANCE
			EFWOO01006AB	1.7E-02	(HE) FAIL TO CHANGEOVER EFW PIT
			HPITMPI001C	4.0E-03	SIS-MPP-001C (C-SI PUMP) TEST & MAINTENANCE
10	3.6E-07	0.52	!16PLOCW_IF	1.0E+00	PARTIAL LOSS OF COMPONENT COOLING WATER
			EFWOO01006AB	1.7E-02	(HE) FAIL TO CHANGEOVER EFW PIT
			HPICF4PMAD001-23	2.2E-05	SIS-MPP-001C,D (SI PUMP) FAIL TO START (CCF)

Table 19.1-70 Internal Flood PRA Dominant Cutsets (Sheet 48 of 70)

Flood Source : FA2-206-01 22nd Dominant Scenario of CDF

Categories of loss-of-fluid events : Major Flood

No.	Cut Sets Freq. (/ry)	Percent	Cutsets	Frequency/ Probability	Description
1	4.3E-05	51.5	!16PLOCW_IF	1.0E+00	PARTIAL LOSS OF COMPONENT COOLING WATER
			EFWOO01006AB	1.7E-02	(HE) FAIL TO CHANGEOVER EFW PIT
			HPIOO02FWBD-S	2.6E-03	(HE) FAIL TO OPEN SAFETY DEPRESSURIZATION VALVE
2	2.1E-06	2.5	!16PLOCW_IF	1.0E+00	PARTIAL LOSS OF COMPONENT COOLING WATER
			EFWOO01006AB	1.7E-02	(HE) FAIL TO CHANGEOVER EFW PIT
			PZRCF2MVOD117-ALL	1.3E-04	RCS-MOV-117A,B FAIL TO OPEN (CCF)
3	1.9E-06	2.3	!16PLOCW_IF	1.0E+00	PARTIAL LOSS OF COMPONENT COOLING WATER
			EFWOO01006AB	1.7E-02	(HE) FAIL TO CHANGEOVER EFW PIT
			HPICF4PMAD001-ALL	1.1E-04	SIS-MPP-001A,B,C,D (SI PUMP) FAIL TO START (CCF)
4	1.8E-06	2.1	!16PLOCW_IF	1.0E+00	PARTIAL LOSS OF COMPONENT COOLING WATER
			EFWXVOD006B	7.0E-04	EFS-VLV-006B FAIL TO OPEN
			HPIOO02FWBD-S	2.6E-03	(HE) FAIL TO OPEN SAFETY DEPRESSURIZATION VALVE
5	1.8E-06	2.1	!16PLOCW_IF	1.0E+00	PARTIAL LOSS OF COMPONENT COOLING WATER
			EFWXVCD007B	7.0E-04	EFS-VLV-007B FAIL TO CLOSE
			HPIOO02FWBD-S	2.6E-03	(HE) FAIL TO OPEN SAFETY DEPRESSURIZATION VALVE
6	1.4E-06	1.7	!16PLOCW_IF	1.0E+00	PARTIAL LOSS OF COMPONENT COOLING WATER
			EFWOO01006AB	1.7E-02	(HE) FAIL TO CHANGEOVER EFW PIT
			RSSCF4MVOD145-ALL	8.4E-05	NCS-MOV-145A,B,C,D FAIL TO OPEN (CCF)
7	1.4E-06	1.7	!16PLOCW_IF	1.0E+00	PARTIAL LOSS OF COMPONENT COOLING WATER
			EFWOO01006AB	1.7E-02	(HE) FAIL TO CHANGEOVER EFW PIT
			RSSCF4MVOD004-ALL	8.4E-05	CSS-MOV-004A,B,C,D FAIL TO OPEN (CCF)

Table 19.1-70 Internal Flood PRA Dominant Cutsets (Sheet 49 of 70)

Flood Source : FA2-206-01 22nd Dominant Scenario of CDF

Categories of loss-of-fluid events : Major Flood

No.	Cut Sets Freq. (/ry)	Percent	Cutsets	Frequency/ Probability	Description
8	1.0E-06	1.2	!16PLOCW_IF	1.0E+00	PARTIAL LOSS OF COMPONENT COOLING WATER
			EFWOO01006AB	1.7E-02	(HE) FAIL TO CHANGEOVER EFW PIT
			RSSTMRP001C	5.0E-03	RHS-MHX-001C (C-CS/RHR HX) TEST & MAINTENANCE
			SWSTMPE001D	1.2E-02	EWS-MPP-001D (D-ESW PUMP) TEST & MAINTENANCE
9	8.1E-07	0.96	!16PLOCW_IF	1.0E+00	PARTIAL LOSS OF COMPONENT COOLING WATER
			EFWOO01006AB	1.7E-02	(HE) FAIL TO CHANGEOVER EFW PIT
			HPITMPI001C	4.0E-03	SIS-MPP-001C (C-SI PUMP) TEST & MAINTENANCE
			SWSTMPE001D	1.2E-02	EWS-MPP-001D (D-ESW PUMP) TEST & MAINTENANCE
10	8.1E-07	0.96	!16PLOCW_IF	1.0E+00	PARTIAL LOSS OF COMPONENT COOLING WATER
			EFWOO01006AB	1.7E-02	(HE) FAIL TO CHANGEOVER EFW PIT
			RSSTMPI001C	4.0E-03	RHS-MPP-001C (C-CS/RHR PUMP) TEST & MAINTENANCE
			SWSTMPE001D	1.2E-02	EWS-MPP-001D (D-ESW PUMP) TEST & MAINTENANCE

Table 19.1-70 Internal Flood PRA Dominant Cutsets (Sheet 50 of 70)

Flood Source : FA2-102-01 23rd Dominant Scenario of CDF

Categories of loss-of-fluid events : Spray

No.	Cut Sets Freq. (/ry)	Percent	Cutsets	Frequency/ Probability	Description
1	4.3E-05	61.8	!16PLOCW_IF	1.0E+00	PARTIAL LOSS OF COMPONENT COOLING WATER
			EFWOO01006AB	1.7E-02	(HE) FAIL TO CHANGEOVER EFW PIT
			HPIOO02FWBD-S	2.6E-03	(HE) FAIL TO OPEN SAFETY DEPRESSURIZATION VALVE
2	2.1E-06	3.0	!16PLOCW_IF	1.0E+00	PARTIAL LOSS OF COMPONENT COOLING WATER
			EFWOO01006AB	1.7E-02	(HE) FAIL TO CHANGEOVER EFW PIT
			PZRCF2MVOD117-ALL	1.3E-04	RCS-MOV-117A,B FAIL TO OPEN (CCF)
3	1.9E-06	2.7	!16PLOCW_IF	1.0E+00	PARTIAL LOSS OF COMPONENT COOLING WATER
			EFWOO01006AB	1.7E-02	(HE) FAIL TO CHANGEOVER EFW PIT
			HPICF4PMAD001-ALL	1.1E-04	SIS-MPP-001A,B,C,D (SI PUMP) FAIL TO START (CCF)
4	1.8E-06	2.6	!16PLOCW_IF	1.0E+00	PARTIAL LOSS OF COMPONENT COOLING WATER
			EFWXVCD007B	7.0E-04	EFS-VLV-007B FAIL TO CLOSE
			HPIOO02FWBD-S	2.6E-03	(HE) FAIL TO OPEN SAFETY DEPRESSURIZATION VALVE
5	1.8E-06	2.6	!16PLOCW_IF	1.0E+00	PARTIAL LOSS OF COMPONENT COOLING WATER
			EFWXVOD006B	7.0E-04	EFS-VLV-006B FAIL TO OPEN
			HPIOO02FWBD-S	2.6E-03	(HE) FAIL TO OPEN SAFETY DEPRESSURIZATION VALVE
6	8.1E-07	1.2	!16PLOCW_IF	1.0E+00	PARTIAL LOSS OF COMPONENT COOLING WATER
			EFWOO01006AB	1.7E-02	(HE) FAIL TO CHANGEOVER EFW PIT
			HPITMPI001C	4.0E-03	SIS-MPP-001C (C-SI PUMP) TEST & MAINTENANCE
			SWSTMPE001D	1.2E-02	EWS-MPP-001D (D-ESW PUMP) TEST & MAINTENANCE
7	7.7E-07	1.1	!13TRANS_IF	1.0E+00	GENERAL TRANSIENT
			EFWOO01006AB	1.7E-02	(HE) FAIL TO CHANGEOVER EFW PIT
			HPIOO02FWBD	3.8E-03	(HE) FAIL TO OPEN SAFETY DEPRESSURIZATION VALVE AND START SAFETY INJECTION PUMP
			SWSTMPE001B	1.2E-02	EWS-MPP-001B (B-ESW PUMP) TEST & MAINTENANCE

Table 19.1-70 Internal Flood PRA Dominant Cutsets (Sheet 51 of 70)

Flood Source : FA2-102-01 23rd Dominant Scenario of CDF

Categories of loss-of-fluid events : Spray

No.	Cut Sets Freq. (/ry)	Percent	Cutsets	Frequency/ Probability	Description
8	6.4E-07	0.92	!13TRANS_IF	1.0E+00	GENERAL TRANSIENT
			EFWOO01006AB	1.7E-02	(HE) FAIL TO CHANGEOVER EFW PIT
			HPIOO02FWBD	3.8E-03	(HE) FAIL TO OPEN SAFETY DEPRESSURIZATION VALVE AND START SAFETY INJECTION PUMP
			VCWCHBD001B	1.0E-02	VWS-MEQ-001B (B-ESSENTIAL CHILLER UNIT) FAIL TO START
9	5.7E-07	0.82	!16PLOCW_IF	1.0E+00	PARTIAL LOSS OF COMPONENT COOLING WATER
			RCP----SEAL	1.0E+00	RCP SEAL LOCA
			SGNBTSWCCF2	1.0E-05	GROUP-2 APPLICATION SOFTWARE CCF
			SGNOO01S	5.7E-02	(HE) FAIL TO START SAFETY INJECTION PUMP BY DAS
10	5.1E-07	0.73	!13TRANS_IF	1.0E+00	GENERAL TRANSIENT
			EFWOO01006AB	1.7E-02	(HE) FAIL TO CHANGEOVER EFW PIT
			HPIOO02FWBD	3.8E-03	(HE) FAIL TO OPEN SAFETY DEPRESSURIZATION VALVE AND START SAFETY INJECTION PUMP
			VCWTMPZ001B	8.0E-03	VWS-MPP-001B (B-ESSENTIAL CHILLED WATER PUMP) TEST & MAINTENANCE

Table 19.1-70 Internal Flood PRA Dominant Cutsets (Sheet 52 of 70)

Flood Source : FA2-501-02 24th Dominant Scenario of CDF

Categories of loss-of-fluid events : Major Flood

No.	Cut Sets Freq. (/ry)	Percent	Cutsets	Frequency/ Probability	Description
1	4.3E-05	41.2	!16PLOCW_IF	1.0E+00	PARTIAL LOSS OF COMPONENT COOLING WATER
			EFWOO01006AB	1.7E-02	(HE) FAIL TO CHANGEOVER EFW PIT
			HPIOO02FWBD-S	2.6E-03	(HE) FAIL TO OPEN SAFETY DEPRESSURIZATION VALVE
2	1.5E-05	14.1	!16PLOCW_IF	1.0E+00	PARTIAL LOSS OF COMPONENT COOLING WATER
			EFWOO01006AB	1.7E-02	(HE) FAIL TO CHANGEOVER EFW PIT
			PZRMVOD117B	8.7E-04	RCS-MOV-117B FAIL TO OPEN
3	2.1E-06	2.0	!16PLOCW_IF	1.0E+00	PARTIAL LOSS OF COMPONENT COOLING WATER
			EFWOO01006AB	1.7E-02	(HE) FAIL TO CHANGEOVER EFW PIT
			PZRCF2MVOD117-ALL	1.3E-04	RCS-MOV-117A,B FAIL TO OPEN (CCF)
4	1.9E-06	1.8	!16PLOCW_IF	1.0E+00	PARTIAL LOSS OF COMPONENT COOLING WATER
			EFWOO01006AB	1.7E-02	(HE) FAIL TO CHANGEOVER EFW PIT
			HPICF4PMAD001-ALL	1.1E-04	SIS-MPP-001A,B,C,D (SI PUMP) FAIL TO START (CCF)
5	1.8E-06	1.7	!16PLOCW_IF	1.0E+00	PARTIAL LOSS OF COMPONENT COOLING WATER
			EFWXVOD006B	7.0E-04	EFS-VLV-006B FAIL TO OPEN
			HPIOO02FWBD-S	2.6E-03	(HE) FAIL TO OPEN SAFETY DEPRESSURIZATION VALVE
6	1.8E-06	1.7	!16PLOCW_IF	1.0E+00	PARTIAL LOSS OF COMPONENT COOLING WATER
			EFWXVCD007B	7.0E-04	EFS-VLV-007B FAIL TO CLOSE
			HPIOO02FWBD-S	2.6E-03	(HE) FAIL TO OPEN SAFETY DEPRESSURIZATION VALVE

Table 19.1-70 Internal Flood PRA Dominant Cutsets (Sheet 53 of 70)

Flood Source : FA2-501-02 24th Dominant Scenario of CDF

Categories of loss-of-fluid events : Major Flood

No.	Cut Sets Freq. (/ry)	Percent	Cutsets	Frequency/ Probability	Description
7	1.4E-06	1.4	!16PLOCW_IF	1.0E+00	PARTIAL LOSS OF COMPONENT COOLING WATER
			EFWOO01006AB	1.7E-02	(HE) FAIL TO CHANGEOVER EFW PIT
			RSSCF4MVOD004-ALL	8.4E-05	CSS-MOV-004A,B,C,D FAIL TO OPEN (CCF)
8	1.4E-06	1.4	!16PLOCW_IF	1.0E+00	PARTIAL LOSS OF COMPONENT COOLING WATER
			EFWOO01006AB	1.7E-02	(HE) FAIL TO CHANGEOVER EFW PIT
			RSSCF4MVOD145-ALL	8.4E-05	NCS-MOV-145A,B,C,D FAIL TO OPEN (CCF)
9	1.0E-06	0.96	!16PLOCW_IF	1.0E+00	PARTIAL LOSS OF COMPONENT COOLING WATER
			EFWOO01006AB	1.7E-02	(HE) FAIL TO CHANGEOVER EFW PIT
			RSSTMRP001C	5.0E-03	RHS-MHX-001C (C-CS/RHR HX) TEST & MAINTENANCE
			SWSTMPE001D	1.2E-02	EWS-MPP-001D (D-ESW PUMP) TEST & MAINTENANCE
10	8.1E-07	0.77	!16PLOCW_IF	1.0E+00	PARTIAL LOSS OF COMPONENT COOLING WATER
			EFWOO01006AB	1.7E-02	(HE) FAIL TO CHANGEOVER EFW PIT
			HPITMPI001C	4.0E-03	SIS-MPP-001C (C-SI PUMP) TEST & MAINTENANCE
			SWSTMPE001D	1.2E-02	EWS-MPP-001D (D-ESW PUMP) TEST & MAINTENANCE

Table 19.1-70 Internal Flood PRA Dominant Cutsets (Sheet 54 of 70)

Flood Source : FA2-512-01 25th Dominant Scenario of CDF

Categories of loss-of-fluid events : Major Flood

No.	Cut Sets Freq. (/ry)	Percent	Cutsets	Frequency/ Probability	Description
1	4.3E-05	51.5	!16PLOCW_IF	1.0E+00	PARTIAL LOSS OF COMPONENT COOLING WATER
			EFWOO01006AB	1.7E-02	(HE) FAIL TO CHANGEOVER EFW PIT
			HPIOO02FWBD-S	2.6E-03	(HE) FAIL TO OPEN SAFETY DEPRESSURIZATION VALVE
2	2.1E-06	2.5	!16PLOCW_IF	1.0E+00	PARTIAL LOSS OF COMPONENT COOLING WATER
			EFWOO01006AB	1.7E-02	(HE) FAIL TO CHANGEOVER EFW PIT
			PZRCF2MVOD117-ALL	1.3E-04	RCS-MOV-117A,B FAIL TO OPEN (CCF)
3	1.9E-06	2.3	!16PLOCW_IF	1.0E+00	PARTIAL LOSS OF COMPONENT COOLING WATER
			EFWOO01006AB	1.7E-02	(HE) FAIL TO CHANGEOVER EFW PIT
			HPICF4PMAD001-ALL	1.1E-04	SIS-MPP-001A,B,C,D (SI PUMP) FAIL TO START (CCF)
4	1.8E-06	2.1	!16PLOCW_IF	1.0E+00	PARTIAL LOSS OF COMPONENT COOLING WATER
			EFWXVOD006B	7.0E-04	EFS-VLV-006B FAIL TO OPEN
			HPIOO02FWBD-S	2.6E-03	(HE) FAIL TO OPEN SAFETY DEPRESSURIZATION VALVE
5	1.8E-06	2.1	!16PLOCW_IF	1.0E+00	PARTIAL LOSS OF COMPONENT COOLING WATER
			EFWXVCD007B	7.0E-04	EFS-VLV-007B FAIL TO CLOSE
			HPIOO02FWBD-S	2.6E-03	(HE) FAIL TO OPEN SAFETY DEPRESSURIZATION VALVE
6	1.4E-06	1.7	!16PLOCW_IF	1.0E+00	PARTIAL LOSS OF COMPONENT COOLING WATER
			EFWOO01006AB	1.7E-02	(HE) FAIL TO CHANGEOVER EFW PIT
			RSSCF4MVOD145-ALL	8.4E-05	NCS-MOV-145A,B,C,D FAIL TO OPEN (CCF)

Table 19.1-70 Internal Flood PRA Dominant Cutsets (Sheet 55 of 70)

Flood Source : FA2-512-01 25th Dominant Scenario of CDF

Categories of loss-of-fluid events : Major Flood

No.	Cut Sets Freq. (/ry)	Percent	Cutsets	Frequency/ Probability	Description
7	1.4E-06	1.7	!16PLOCW_IF	1.0E+00	PARTIAL LOSS OF COMPONENT COOLING WATER
			EFWOO01006AB	1.7E-02	(HE) FAIL TO CHANGEOVER EFW PIT
			RSSCF4MVOD004-ALL	8.4E-05	CSS-MOV-004A,B,C,D FAIL TO OPEN (CCF)
8	1.0E-06	1.2	!16PLOCW_IF	1.0E+00	PARTIAL LOSS OF COMPONENT COOLING WATER
			EFWOO01006AB	1.7E-02	(HE) FAIL TO CHANGEOVER EFW PIT
			RSSTMRP001C	5.0E-03	RHS-MHX-001C (C-CS/RHR HX) TEST & MAINTENANCE
			SWSTMPE001D	1.2E-02	EWS-MPP-001D (D-ESW PUMP) TEST & MAINTENANCE
9	8.1E-07	0.97	!16PLOCW_IF	1.0E+00	PARTIAL LOSS OF COMPONENT COOLING WATER
			EFWOO01006AB	1.7E-02	(HE) FAIL TO CHANGEOVER EFW PIT
			HPITMPI001C	4.0E-03	SIS-MPP-001C (C-SI PUMP) TEST & MAINTENANCE
			SWSTMPE001D	1.2E-02	EWS-MPP-001D (D-ESW PUMP) TEST & MAINTENANCE
10	8.1E-07	0.97	!16PLOCW_IF	1.0E+00	PARTIAL LOSS OF COMPONENT COOLING WATER
			EFWOO01006AB	1.7E-02	(HE) FAIL TO CHANGEOVER EFW PIT
			RSSTMPI001C	4.0E-03	RHS-MPP-001C (C-CS/RHR PUMP) TEST & MAINTENANCE
			SWSTMPE001D	1.2E-02	EWS-MPP-001D (D-ESW PUMP) TEST & MAINTENANCE

Table 19.1-70 Internal Flood PRA Dominant Cutsets (Sheet 56 of 70)

Flood Source : FA2-419-01 26th Dominant Scenario of CDF

Categories of loss-of-fluid events : Major Flood

No.	Cut Sets Freq. (/ry)	Percent	Cutsets	Frequency/ Probability	Description
1	4.3E-05	51.5	!16PLOCW_IF	1.0E+00	PARTIAL LOSS OF COMPONENT COOLING WATER
			EFWOO01006AB	1.7E-02	(HE) FAIL TO CHANGEOVER EFW PIT
			HPIOO02FWBD-S	2.6E-03	(HE) FAIL TO OPEN SAFETY DEPRESSURIZATION VALVE
2	2.1E-06	2.5	!16PLOCW_IF	1.0E+00	PARTIAL LOSS OF COMPONENT COOLING WATER
			EFWOO01006AB	1.7E-02	(HE) FAIL TO CHANGEOVER EFW PIT
			PZRCF2MVOD117-ALL	1.3E-04	RCS-MOV-117A,B FAIL TO OPEN (CCF)
3	1.9E-06	2.3	!16PLOCW_IF	1.0E+00	PARTIAL LOSS OF COMPONENT COOLING WATER
			EFWOO01006AB	1.7E-02	(HE) FAIL TO CHANGEOVER EFW PIT
			HPICF4PMAD001-ALL	1.1E-04	SIS-MPP-001A,B,C,D (SI PUMP) FAIL TO START (CCF)
4	1.8E-06	2.1	!16PLOCW_IF	1.0E+00	PARTIAL LOSS OF COMPONENT COOLING WATER
			EFWXVOD006B	7.0E-04	EFS-VLV-006B FAIL TO OPEN
			HPIOO02FWBD-S	2.6E-03	(HE) FAIL TO OPEN SAFETY DEPRESSURIZATION VALVE
5	1.8E-06	2.1	!16PLOCW_IF	1.0E+00	PARTIAL LOSS OF COMPONENT COOLING WATER
			EFWXVCD007B	7.0E-04	EFS-VLV-007B FAIL TO CLOSE
			HPIOO02FWBD-S	2.6E-03	(HE) FAIL TO OPEN SAFETY DEPRESSURIZATION VALVE
6	1.4E-06	1.7	!16PLOCW_IF	1.0E+00	PARTIAL LOSS OF COMPONENT COOLING WATER
			EFWOO01006AB	1.7E-02	(HE) FAIL TO CHANGEOVER EFW PIT
			RSSCF4MVOD145-ALL	8.4E-05	NCS-MOV-145A,B,C,D FAIL TO OPEN (CCF)
7	1.4E-06	1.7	!16PLOCW_IF	1.0E+00	PARTIAL LOSS OF COMPONENT COOLING WATER
			EFWOO01006AB	1.7E-02	(HE) FAIL TO CHANGEOVER EFW PIT
			RSSCF4MVOD004-ALL	8.4E-05	CSS-MOV-004A,B,C,D FAIL TO OPEN (CCF)

Table 19.1-70 Internal Flood PRA Dominant Cutsets (Sheet 57 of 70)

Flood Source : FA2-419-01 26th Dominant Scenario of CDF

Categories of loss-of-fluid events : Major Flood

No.	Cut Sets Freq. (/ry)	Percent	Cutsets	Frequency/ Probability	Description
8	1.0E-06	1.2	!16PLOCW_IF	1.0E+00	PARTIAL LOSS OF COMPONENT COOLING WATER
			EFWOO01006AB	1.7E-02	(HE) FAIL TO CHANGEOVER EFW PIT
			RSSTMRP001C	5.0E-03	RHS-MHX-001C (C-CS/RHR HX) TEST & MAINTENANCE
			SWSTMPE001D	1.2E-02	EWS-MPP-001D (D-ESW PUMP) TEST & MAINTENANCE
9	8.1E-07	0.96	!16PLOCW_IF	1.0E+00	PARTIAL LOSS OF COMPONENT COOLING WATER
			EFWOO01006AB	1.7E-02	(HE) FAIL TO CHANGEOVER EFW PIT
			HPITMPI001C	4.0E-03	SIS-MPP-001C (C-SI PUMP) TEST & MAINTENANCE
			SWSTMPE001D	1.2E-02	EWS-MPP-001D (D-ESW PUMP) TEST & MAINTENANCE
10	8.1E-07	0.96	!16PLOCW_IF	1.0E+00	PARTIAL LOSS OF COMPONENT COOLING WATER
			EFWOO01006AB	1.7E-02	(HE) FAIL TO CHANGEOVER EFW PIT
			RSSTMPI001C	4.0E-03	RHS-MPP-001C (C-CS/RHR PUMP) TEST & MAINTENANCE
			SWSTMPE001D	1.2E-02	EWS-MPP-001D (D-ESW PUMP) TEST & MAINTENANCE

Table 19.1-70 Internal Flood PRA Dominant Cutsets (Sheet 58 of 70)

Flood Source : FA2-101-01 27th Dominant Scenario of CDF

Categories of loss-of-fluid events : Major Flood

No.	Cut Sets Freq. (/ry)	Percent	Cutsets	Frequency/ Probability	Description
1	4.3E-05	64.5	!16PLOCW_IF	1.0E+00	PARTIAL LOSS OF COMPONENT COOLING WATER
			EFWOO01006AB	1.7E-02	(HE) FAIL TO CHANGEOVER EFW PIT
			HPIOO02FWBD-S	2.6E-03	(HE) FAIL TO OPEN SAFETY DEPRESSURIZATION VALVE
2	2.1E-06	3.2	!16PLOCW_IF	1.0E+00	PARTIAL LOSS OF COMPONENT COOLING WATER
			EFWOO01006AB	1.7E-02	(HE) FAIL TO CHANGEOVER EFW PIT
			PZRCF2MVOD117-ALL	1.3E-04	RCS-MOV-117A,B FAIL TO OPEN (CCF)
3	1.9E-06	2.8	!16PLOCW_IF	1.0E+00	PARTIAL LOSS OF COMPONENT COOLING WATER
			EFWOO01006AB	1.7E-02	(HE) FAIL TO CHANGEOVER EFW PIT
			HPICF4PMAD001-ALL	1.1E-04	SIS-MPP-001A,B,C,D (SI PUMP) FAIL TO START (CCF)
4	1.8E-06	2.7	!16PLOCW_IF	1.0E+00	PARTIAL LOSS OF COMPONENT COOLING WATER
			EFWXVCD007B	7.0E-04	EFS-VLV-007B FAIL TO CLOSE
			HPIOO02FWBD-S	2.6E-03	(HE) FAIL TO OPEN SAFETY DEPRESSURIZATION VALVE
5	1.8E-06	2.7	!16PLOCW_IF	1.0E+00	PARTIAL LOSS OF COMPONENT COOLING WATER
			EFWXVOD006B	7.0E-04	EFS-VLV-006B FAIL TO OPEN
			HPIOO02FWBD-S	2.6E-03	(HE) FAIL TO OPEN SAFETY DEPRESSURIZATION VALVE
6	8.1E-07	1.2	!16PLOCW_IF	1.0E+00	PARTIAL LOSS OF COMPONENT COOLING WATER
			EFWOO01006AB	1.7E-02	(HE) FAIL TO CHANGEOVER EFW PIT
			HPITMPI001C	4.0E-03	SIS-MPP-001C (C-SI PUMP) TEST & MAINTENANCE
			SWSTMPE001D	1.2E-02	EWS-MPP-001D (D-ESW PUMP) TEST & MAINTENANCE

Table 19.1-70 Internal Flood PRA Dominant Cutsets (Sheet 59 of 70)

Flood Source : FA2-101-01 27th Dominant Scenario of CDF

Categories of loss-of-fluid events : Major Flood

No.	Cut Sets Freq. (/ry)	Percent	Cutsets	Frequency/ Probability	Description
7	5.7E-07	0.86	!16PLOCW_IF	1.0E+00	PARTIAL LOSS OF COMPONENT COOLING WATER
			RCP----SEAL	1.0E+00	RCP SEAL LOCA
			SGNBTSWCCF2	1.0E-05	GROUP-2 APPLICATION SOFTWARE CCF
			SGNOO01S	5.7E-02	(HE) FAIL TO START SAFETY INJECTION PUMP BY DAS
8	4.7E-07	0.71	!16PLOCW_IF	1.0E+00	PARTIAL LOSS OF COMPONENT COOLING WATER
			CWSTMRC001D	7.0E-03	NCS-MHX-001D (D-CCW HX) TEST & MAINTENANCE
			EFWOO01006AB	1.7E-02	(HE) FAIL TO CHANGEOVER EFW PIT
			HPITMPI001C	4.0E-03	SIS-MPP-001C (C-SI PUMP) TEST & MAINTENANCE
9	4.1E-07	0.60	!16PLOCW_IF	1.0E+00	PARTIAL LOSS OF COMPONENT COOLING WATER
			CWSTMPC001D	6.0E-03	NCS-MPP-001D (D-CCW PUMP) TEST & MAINTENANCE
			EFWOO01006AB	1.7E-02	(HE) FAIL TO CHANGEOVER EFW PIT
			HPITMPI001C	4.0E-03	SIS-MPP-001C (C-SI PUMP) TEST & MAINTENANCE
10	3.6E-07	0.54	!16PLOCW_IF	1.0E+00	PARTIAL LOSS OF COMPONENT COOLING WATER
			EFWOO01006AB	1.7E-02	(HE) FAIL TO CHANGEOVER EFW PIT
			HPICF4PMAD001-23	2.2E-05	SIS-MPP-001C,D (SI PUMP) FAIL TO START (CCF)

Table 19.1-70 Internal Flood PRA Dominant Cutsets (Sheet 60 of 70)

Flood Source : FA2-106-01 28th Dominant Scenario of CDF

Categories of loss-of-fluid events : Flood

No.	Cut Sets Freq. (/ry)	Percent	Cutsets	Frequency/ Probability	Description
1	4.3E-05	52.9	!16PLOCW_IF	1.0E+00	PARTIAL LOSS OF COMPONENT COOLING WATER
			EFWOO01006AB	1.7E-02	(HE) FAIL TO CHANGEOVER EFW PIT
			HPIOO02FWBD-S	2.6E-03	(HE) FAIL TO OPEN SAFETY DEPRESSURIZATION VALVE
2	2.1E-06	2.6	!16PLOCW_IF	1.0E+00	PARTIAL LOSS OF COMPONENT COOLING WATER
			EFWOO01006AB	1.7E-02	(HE) FAIL TO CHANGEOVER EFW PIT
			PZRCF2MVOD117-ALL	1.3E-04	RCS-MOV-117A,B FAIL TO OPEN (CCF)
3	1.9E-06	2.3	!16PLOCW_IF	1.0E+00	PARTIAL LOSS OF COMPONENT COOLING WATER
			EFWOO01006AB	1.7E-02	(HE) FAIL TO CHANGEOVER EFW PIT
			HPICF4PMAD001-ALL	1.1E-04	SIS-MPP-001A,B,C,D (SI PUMP) FAIL TO START (CCF)
4	1.8E-06	2.2	!16PLOCW_IF	1.0E+00	PARTIAL LOSS OF COMPONENT COOLING WATER
			EFWXVOD006B	7.0E-04	EFS-VLV-006B FAIL TO OPEN
			HPIOO02FWBD-S	2.6E-03	(HE) FAIL TO OPEN SAFETY DEPRESSURIZATION VALVE
5	1.8E-06	2.2	!16PLOCW_IF	1.0E+00	PARTIAL LOSS OF COMPONENT COOLING WATER
			EFWXVCD007B	7.0E-04	EFS-VLV-007B FAIL TO CLOSE
			HPIOO02FWBD-S	2.6E-03	(HE) FAIL TO OPEN SAFETY DEPRESSURIZATION VALVE
6	1.4E-06	1.7	!16PLOCW_IF	1.0E+00	PARTIAL LOSS OF COMPONENT COOLING WATER
			EFWOO01006AB	1.7E-02	(HE) FAIL TO CHANGEOVER EFW PIT
			RSSCF4MVOD145-ALL	8.4E-05	NCS-MOV-145A,B,C,D FAIL TO OPEN (CCF)
7	1.4E-06	1.7	!16PLOCW_IF	1.0E+00	PARTIAL LOSS OF COMPONENT COOLING WATER
			EFWOO01006AB	1.7E-02	(HE) FAIL TO CHANGEOVER EFW PIT
			RSSCF4MVOD004-ALL	8.4E-05	CSS-MOV-004A,B,C,D FAIL TO OPEN (CCF)

Table 19.1-70 Internal Flood PRA Dominant Cutsets (Sheet 61 of 70)

Flood Source : FA2-106-01 28th Dominant Scenario of CDF

Categories of loss-of-fluid events : Flood

No.	Cut Sets Freq. (/ry)	Percent	Cutsets	Frequency/ Probability	Description
8	1.0E-06	1.2	!16PLOCW_IF	1.0E+00	PARTIAL LOSS OF COMPONENT COOLING WATER
			EFWOO01006AB	1.7E-02	(HE) FAIL TO CHANGEOVER EFW PIT
			RSSTMRP001C	5.0E-03	RHS-MHX-001C (C-CS/RHR HX) TEST & MAINTENANCE
			SWSTMPE001D	1.2E-02	EWS-MPP-001D (D-ESW PUMP) TEST & MAINTENANCE
9	8.1E-07	0.99	!16PLOCW_IF	1.0E+00	PARTIAL LOSS OF COMPONENT COOLING WATER
			EFWOO01006AB	1.7E-02	(HE) FAIL TO CHANGEOVER EFW PIT
			RSSTMPI001C	4.0E-03	RHS-MPP-001C (C-CS/RHR PUMP) TEST & MAINTENANCE
			SWSTMPE001D	1.2E-02	EWS-MPP-001D (D-ESW PUMP) TEST & MAINTENANCE
10	8.1E-07	0.99	!16PLOCW_IF	1.0E+00	PARTIAL LOSS OF COMPONENT COOLING WATER
			EFWOO01006AB	1.7E-02	(HE) FAIL TO CHANGEOVER EFW PIT
			HPITMPI001C	4.0E-03	SIS-MPP-001C (C-SI PUMP) TEST & MAINTENANCE
			SWSTMPE001D	1.2E-02	EWS-MPP-001D (D-ESW PUMP) TEST & MAINTENANCE

Table 19.1-70 Internal Flood PRA Dominant Cutsets (Sheet 62 of 70)

Flood Source : FA2-415-01 29th Dominant Scenario of CDF

Categories of loss-of-fluid events : Spray

No.	Cut Sets Freq. (/ry)	Percent	Cutsets	Frequency/ Probability	Description
1	2.6E-07	9.0	!13TRANS_IF	1.0E+00	GENERAL TRANSIENT
			EFWOO01006AB	1.7E-02	(HE) FAIL TO CHANGEOVER EFW PIT
			EFWTMPA001C	4.0E-03	EFS-MPP-001C (C-EFW PUMP) TEST & MAINTENANCE
			HPIOO02FWBD	3.8E-03	(HE) FAIL TO OPEN SAFETY DEPRESSURIZATION VALVE AND START SAFETY INJECTION PUMP
2	2.6E-07	9.0	!14LOFF_IF	1.0E+00	LOSS OF FEED WATER FLOW
			EFWOO01006AB	1.7E-02	(HE) FAIL TO CHANGEOVER EFW PIT
			EFWTMPA001C	4.0E-03	EFS-MPP-001C (C-EFW PUMP) TEST & MAINTENANCE
			HPIOO02FWBD	3.8E-03	(HE) FAIL TO OPEN SAFETY DEPRESSURIZATION VALVE AND START SAFETY INJECTION PUMP
3	1.6E-07	5.7	!13TRANS_IF	1.0E+00	GENERAL TRANSIENT
			EFWOO01006AB	1.7E-02	(HE) FAIL TO CHANGEOVER EFW PIT
			HPIOO02FWBD	3.8E-03	(HE) FAIL TO OPEN SAFETY DEPRESSURIZATION VALVE AND START SAFETY INJECTION PUMP
			HVATMAH401C	2.5E-03	VRS-MAH-401C (C-EFW PUMP AIR HANDLING UNIT) TEST & MAINTENANCE
4	1.6E-07	5.7	!14LOFF_IF	1.0E+00	LOSS OF FEED WATER FLOW
			EFWOO01006AB	1.7E-02	(HE) FAIL TO CHANGEOVER EFW PIT
			HPIOO02FWBD	3.8E-03	(HE) FAIL TO OPEN SAFETY DEPRESSURIZATION VALVE AND START SAFETY INJECTION PUMP
			HVATMAH401C	2.5E-03	VRS-MAH-401C (C-EFW PUMP AIR HANDLING UNIT) TEST & MAINTENANCE

Table 19.1-70 Internal Flood PRA Dominant Cutsets (Sheet 63 of 70)

Flood Source : FA2-415-01 29th Dominant Scenario of CDF

Categories of loss-of-fluid events : Spray

No.	Cut Sets Freq. (/ry)	Percent	Cutsets	Frequency/ Probability	Description
5	1.5E-07	5.4	!13TRANS_IF	1.0E+00	GENERAL TRANSIENT
			EFWOO01006AB	1.7E-02	(HE) FAIL TO CHANGEOVER EFW PIT
			HPIOO02FWBD	3.8E-03	(HE) FAIL TO OPEN SAFETY DEPRESSURIZATION VALVE AND START SAFETY INJECTION PUMP
			HVAAHSR401C	2.4E-03	VRS-MAH-401C (C-EFW PUMP AIR HANDLING UNIT) FAIL TO RUN DURING FIRST HOUR OF OPERATION
6	1.5E-07	5.4	!14LOFF_IF	1.0E+00	LOSS OF FEED WATER FLOW
			EFWOO01006AB	1.7E-02	(HE) FAIL TO CHANGEOVER EFW PIT
			HPIOO02FWBD	3.8E-03	(HE) FAIL TO OPEN SAFETY DEPRESSURIZATION VALVE AND START SAFETY INJECTION PUMP
			HVAAHSR401C	2.4E-03	VRS-MAH-401C (C-EFW PUMP AIR HANDLING UNIT) FAIL TO RUN DURING FIRST HOUR OF OPERATION
7	1.3E-07	4.6	!14LOFF_IF	1.0E+00	LOSS OF FEED WATER FLOW
			EFWOO01006AB	1.7E-02	(HE) FAIL TO CHANGEOVER EFW PIT
			HPIOO02FWBD	3.8E-03	(HE) FAIL TO OPEN SAFETY DEPRESSURIZATION VALVE AND START SAFETY INJECTION PUMP
			VCWCHYR001C	2.1E-03	VWS-MEQ-001C (C-ESSENTIAL CHILLER UNIT) FAIL TO RUN
8	1.3E-07	4.6	!13TRANS_IF	1.0E+00	GENERAL TRANSIENT
			EFWOO01006AB	1.7E-02	(HE) FAIL TO CHANGEOVER EFW PIT
			HPIOO02FWBD	3.8E-03	(HE) FAIL TO OPEN SAFETY DEPRESSURIZATION VALVE AND START SAFETY INJECTION PUMP
			VCWCHYR001C	2.1E-03	VWS-MEQ-001C (C-ESSENTIAL CHILLER UNIT) FAIL TO RUN

Table 19.1-70 Internal Flood PRA Dominant Cutsets (Sheet 64 of 70)

Flood Source : FA2-415-01 29th Dominant Scenario of CDF

Categories of loss-of-fluid events : Spray

No.	Cut Sets Freq. (/ry)	Percent	Cutsets	Frequency/ Probability	Description
9	8.2E-08	2.9	!14LOFF_IF	1.0E+00	LOSS OF FEED WATER FLOW
			EFWOO01006AB	1.7E-02	(HE) FAIL TO CHANGEOVER EFW PIT
			EFWPMAD001C	1.3E-03	EFS-MPP-001C (C-EFW PUMP) FAIL TO START
			HPIOO02FWBD	3.8E-03	(HE) FAIL TO OPEN SAFETY DEPRESSURIZATION VALVE AND START SAFETY INJECTION PUMP
10	8.2E-08	2.9	!13TRANS_IF	1.0E+00	GENERAL TRANSIENT
			EFWOO01006AB	1.7E-02	(HE) FAIL TO CHANGEOVER EFW PIT
			EFWPMAD001C	1.3E-03	EFS-MPP-001C (C-EFW PUMP) FAIL TO START
			HPIOO02FWBD	3.8E-03	(HE) FAIL TO OPEN SAFETY DEPRESSURIZATION VALVE AND START SAFETY INJECTION PUMP

Table 19.1-70 Internal Flood PRA Dominant Cutsets (Sheet 65 of 70)

Flood Source : FA2-107-01 30th Dominant Scenario of CDF

Categories of loss-of-fluid events : Flood

No.	Cut Sets Freq. (/ry)	Percent	Cutsets	Frequency/ Probability	Description
1	4.3E-05	52.9	!16PLOCW_IF	1.0E+00	PARTIAL LOSS OF COMPONENT COOLING WATER
			EFWOO01006AB	1.7E-02	(HE) FAIL TO CHANGEOVER EFW PIT
			HPIOO02FWBD-S	2.6E-03	(HE) FAIL TO OPEN SAFETY DEPRESSURIZATION VALVE
2	2.1E-06	2.6	!16PLOCW_IF	1.0E+00	PARTIAL LOSS OF COMPONENT COOLING WATER
			EFWOO01006AB	1.7E-02	(HE) FAIL TO CHANGEOVER EFW PIT
			PZRCF2MVOD117-ALL	1.3E-04	RCS-MOV-117A,B FAIL TO OPEN (CCF)
3	1.9E-06	2.3	!16PLOCW_IF	1.0E+00	PARTIAL LOSS OF COMPONENT COOLING WATER
			EFWOO01006AB	1.7E-02	(HE) FAIL TO CHANGEOVER EFW PIT
			HPICF4PMAD001-ALL	1.1E-04	SIS-MPP-001A,B,C,D (SI PUMP) FAIL TO START (CCF)
4	1.8E-06	2.2	!16PLOCW_IF	1.0E+00	PARTIAL LOSS OF COMPONENT COOLING WATER
			EFWXVOD006B	7.0E-04	EFS-VLV-006B FAIL TO OPEN
			HPIOO02FWBD-S	2.6E-03	(HE) FAIL TO OPEN SAFETY DEPRESSURIZATION VALVE
5	1.8E-06	2.2	!16PLOCW_IF	1.0E+00	PARTIAL LOSS OF COMPONENT COOLING WATER
			EFWXVCD007B	7.0E-04	EFS-VLV-007B FAIL TO CLOSE
			HPIOO02FWBD-S	2.6E-03	(HE) FAIL TO OPEN SAFETY DEPRESSURIZATION VALVE
6	1.4E-06	1.7	!16PLOCW_IF	1.0E+00	PARTIAL LOSS OF COMPONENT COOLING WATER
			EFWOO01006AB	1.7E-02	(HE) FAIL TO CHANGEOVER EFW PIT
			RSSCF4MVOD145-ALL	8.4E-05	NCS-MOV-145A,B,C,D FAIL TO OPEN (CCF)
7	1.4E-06	1.7	!16PLOCW_IF	1.0E+00	PARTIAL LOSS OF COMPONENT COOLING WATER
			EFWOO01006AB	1.7E-02	(HE) FAIL TO CHANGEOVER EFW PIT
			RSSCF4MVOD004-ALL	8.4E-05	CSS-MOV-004A,B,C,D FAIL TO OPEN (CCF)

Table 19.1-70 Internal Flood PRA Dominant Cutsets (Sheet 66 of 70)

Flood Source : FA2-107-01 30th Dominant Scenario of CDF

Categories of loss-of-fluid events : Flood

No.	Cut Sets Freq. (/ry)	Percent	Cutsets	Frequency/ Probability	Description
8	1.0E-06	1.2	!16PLOCW_IF	1.0E+00	PARTIAL LOSS OF COMPONENT COOLING WATER
			EFWOO01006AB	1.7E-02	(HE) FAIL TO CHANGEOVER EFW PIT
			RSSTMRP001C	5.0E-03	RHS-MHX-001C (C-CS/RHR HX) TEST & MAINTENANCE
			SWSTMPE001D	1.2E-02	EWS-MPP-001D (D-ESW PUMP) TEST & MAINTENANCE
9	8.1E-07	0.99	!16PLOCW_IF	1.0E+00	PARTIAL LOSS OF COMPONENT COOLING WATER
			EFWOO01006AB	1.7E-02	(HE) FAIL TO CHANGEOVER EFW PIT
			RSSTMPI001C	4.0E-03	RHS-MPP-001C (C-CS/RHR PUMP) TEST & MAINTENANCE
			SWSTMPE001D	1.2E-02	EWS-MPP-001D (D-ESW PUMP) TEST & MAINTENANCE
10	8.1E-07	0.99	!16PLOCW_IF	1.0E+00	PARTIAL LOSS OF COMPONENT COOLING WATER
			EFWOO01006AB	1.7E-02	(HE) FAIL TO CHANGEOVER EFW PIT
			HPITMPI001C	4.0E-03	SIS-MPP-001C (C-SI PUMP) TEST & MAINTENANCE
			SWSTMPE001D	1.2E-02	EWS-MPP-001D (D-ESW PUMP) TEST & MAINTENANCE

Table 19.1-70 Internal Flood PRA Dominant Cutsets (Sheet 67 of 70)

Flood Source : FA2-105-01 31st Dominant Scenario of CDF

Categories of loss-of-fluid events : Flood

No.	Cut Sets Freq. (/ry)	Percent	Cutsets	Frequency/ Probability	Description
1	4.3E-05	64.5	!16PLOCW_IF	1.0E+00	PARTIAL LOSS OF COMPONENT COOLING WATER
			EFWOO01006AB	1.7E-02	(HE) FAIL TO CHANGEOVER EFW PIT
			HPIOO02FWBD-S	2.6E-03	(HE) FAIL TO OPEN SAFETY DEPRESSURIZATION VALVE
2	2.1E-06	3.2	!16PLOCW_IF	1.0E+00	PARTIAL LOSS OF COMPONENT COOLING WATER
			EFWOO01006AB	1.7E-02	(HE) FAIL TO CHANGEOVER EFW PIT
			PZRCF2MVOD117-ALL	1.3E-04	RCS-MOV-117A,B FAIL TO OPEN (CCF)
3	1.9E-06	2.8	!16PLOCW_IF	1.0E+00	PARTIAL LOSS OF COMPONENT COOLING WATER
			EFWOO01006AB	1.7E-02	(HE) FAIL TO CHANGEOVER EFW PIT
			HPICF4PMAD001-ALL	1.1E-04	SIS-MPP-001A,B,C,D (SI PUMP) FAIL TO START (CCF)
4	1.8E-06	2.7	!16PLOCW_IF	1.0E+00	PARTIAL LOSS OF COMPONENT COOLING WATER
			EFWXVCD007B	7.0E-04	EFS-VLV-007B FAIL TO CLOSE
			HPIOO02FWBD-S	2.6E-03	(HE) FAIL TO OPEN SAFETY DEPRESSURIZATION VALVE
5	1.8E-06	2.7	!16PLOCW_IF	1.0E+00	PARTIAL LOSS OF COMPONENT COOLING WATER
			EFWXVOD006B	7.0E-04	EFS-VLV-006B FAIL TO OPEN
			HPIOO02FWBD-S	2.6E-03	(HE) FAIL TO OPEN SAFETY DEPRESSURIZATION VALVE
6	8.1E-07	1.2	!16PLOCW_IF	1.0E+00	PARTIAL LOSS OF COMPONENT COOLING WATER
			EFWOO01006AB	1.7E-02	(HE) FAIL TO CHANGEOVER EFW PIT
			HPITMPI001C	4.0E-03	SIS-MPP-001C (C-SI PUMP) TEST & MAINTENANCE
			SWSTMPE001D	1.2E-02	EWS-MPP-001D (D-ESW PUMP) TEST & MAINTENANCE

Table 19.1-70 Internal Flood PRA Dominant Cutsets (Sheet 68 of 70)

Flood Source : FA2-105-01 31st Dominant Scenario of CDF

Categories of loss-of-fluid events : Flood

No.	Cut Sets Freq. (/ry)	Percent	Cutsets	Frequency/ Probability	Description
7	5.7E-07	0.86	!16PLOCW_IF	1.0E+00	PARTIAL LOSS OF COMPONENT COOLING WATER
			RCP----SEAL	1.0E+00	RCP SEAL LOCA
			SGNBTSWCCF2	1.0E-05	GROUP-2 APPLICATION SOFTWARE CCF
			SGNOO01S	5.7E-02	(HE) FAIL TO START SAFETY INJECTION PUMP BY DAS
8	4.7E-07	0.71	!16PLOCW_IF	1.0E+00	PARTIAL LOSS OF COMPONENT COOLING WATER
			CWSTMRC001D	7.0E-03	NCS-MHX-001D (D-CCW HX) TEST & MAINTENANCE
			EFWOO01006AB	1.7E-02	(HE) FAIL TO CHANGEOVER EFW PIT
			HPITMPI001C	4.0E-03	SIS-MPP-001C (C-SI PUMP) TEST & MAINTENANCE
9	4.1E-07	0.60	!16PLOCW_IF	1.0E+00	PARTIAL LOSS OF COMPONENT COOLING WATER
			CWSTMPC001D	6.0E-03	NCS-MPP-001D (D-CCW PUMP) TEST & MAINTENANCE
			EFWOO01006AB	1.7E-02	(HE) FAIL TO CHANGEOVER EFW PIT
			HPITMPI001C	4.0E-03	SIS-MPP-001C (C-SI PUMP) TEST & MAINTENANCE
10	3.6E-07	0.54	!16PLOCW_IF	1.0E+00	PARTIAL LOSS OF COMPONENT COOLING WATER
			EFWOO01006AB	1.7E-02	(HE) FAIL TO CHANGEOVER EFW PIT
			HPICF4PMAD001-23	2.2E-05	SIS-MPP-001C,D (SI PUMP) FAIL TO START (CCF)

Table 19.1-70 Internal Flood PRA Dominant Cutsets (Sheet 69 of 70)

Flood Source : FA2-414-01 32nd Dominant Scenario of CDF

Categories of loss-of-fluid events : Major Flood

No.	Cut Sets Freq. (/ry)	Percent	Cutsets	Frequency/ Probability	Description
1	7.7E-07	6.4	!14LOFF_IF	1.0E+00	LOSS OF FEED WATER FLOW
			EFWOO01006AB	1.7E-02	(HE) FAIL TO CHANGEOVER EFW PIT
			HPIOO02FWBD	3.8E-03	(HE) FAIL TO OPEN SAFETY DEPRESSURIZATION VALVE AND START SAFETY INJECTION PUMP
			SWSTMPE001B	1.2E-02	EWS-MPP-001B (B-ESW PUMP) TEST & MAINTENANCE
2	7.7E-07	6.4	!13TRANS_IF	1.0E+00	GENERAL TRANSIENT
			EFWOO01006AB	1.7E-02	(HE) FAIL TO CHANGEOVER EFW PIT
			HPIOO02FWBD	3.8E-03	(HE) FAIL TO OPEN SAFETY DEPRESSURIZATION VALVE AND START SAFETY INJECTION PUMP
			SWSTMPE001B	1.2E-02	EWS-MPP-001B (B-ESW PUMP) TEST & MAINTENANCE
3	6.4E-07	5.4	!13TRANS_IF	1.0E+00	GENERAL TRANSIENT
			EFWOO01006AB	1.7E-02	(HE) FAIL TO CHANGEOVER EFW PIT
			HPIOO02FWBD	3.8E-03	(HE) FAIL TO OPEN SAFETY DEPRESSURIZATION VALVE AND START SAFETY INJECTION PUMP
			VCWCHBD001B	1.0E-02	VWS-MEQ-001B (B-ESSENTIAL CHILLER UNIT) FAIL TO START
4	6.4E-07	5.4	!14LOFF_IF	1.0E+00	LOSS OF FEED WATER FLOW
			EFWOO01006AB	1.7E-02	(HE) FAIL TO CHANGEOVER EFW PIT
			HPIOO02FWBD	3.8E-03	(HE) FAIL TO OPEN SAFETY DEPRESSURIZATION VALVE AND START SAFETY INJECTION PUMP
			VCWCHBD001B	1.0E-02	VWS-MEQ-001B (B-ESSENTIAL CHILLER UNIT) FAIL TO START
5	5.2E-07	4.3	!11SLBI_IF	1.0E+00	STEAM LINE BREAK/LEAK (CV SIDE)
			EFWOO01006AB	1.7E-02	(HE) FAIL TO CHANGEOVER EFW PIT
			HPIOO02FWBD-S	2.6E-03	(HE) FAIL TO OPEN SAFETY DEPRESSURIZATION VALVE
			SWSTMPE001B	1.2E-02	EWS-MPP-001B (B-ESW PUMP) TEST & MAINTENANCE

Table 19.1-70 Internal Flood PRA Dominant Cutsets (Sheet 70 of 70)

Flood Source : FA2-414-01 32nd Dominant Scenario of CDF

Categories of loss-of-fluid events : Major Flood

No.	Cut Sets Freq. (/ry)	Percent	Cutsets	Frequency/ Probability	Description
6	5.1E-07	4.3	!14LOFF_IF	1.0E+00	LOSS OF FEED WATER FLOW
			EFWOO01006AB	1.7E-02	(HE) FAIL TO CHANGEOVER EFW PIT
			HPIOO02FWBD	3.8E-03	(HE) FAIL TO OPEN SAFETY DEPRESSURIZATION VALVE AND START SAFETY INJECTION PUMP
			VCWTMPZ001B	8.0E-03	VWS-MPP-001B (B-ESSENTIAL CHILLED WATER PUMP) TEST & MAINTENANCE
7	5.1E-07	4.3	!13TRANS_IF	1.0E+00	GENERAL TRANSIENT
			EFWOO01006AB	1.7E-02	(HE) FAIL TO CHANGEOVER EFW PIT
			HPIOO02FWBD	3.8E-03	(HE) FAIL TO OPEN SAFETY DEPRESSURIZATION VALVE AND START SAFETY INJECTION PUMP
			VCWTMPZ001B	8.0E-03	VWS-MPP-001B (B-ESSENTIAL CHILLED WATER PUMP) TEST & MAINTENANCE
8	4.3E-07	3.6	!11SLBI_IF	1.0E+00	STEAM LINE BREAK/LEAK (CV SIDE)
			EFWOO01006AB	1.7E-02	(HE) FAIL TO CHANGEOVER EFW PIT
			HPIOO02FWBD-S	2.6E-03	(HE) FAIL TO OPEN SAFETY DEPRESSURIZATION VALVE
			VCWCHBD001B	1.0E-02	VWS-MEQ-001B (B-ESSENTIAL CHILLER UNIT) FAIL TO START
9	3.5E-07	2.9	!11SLBI_IF	1.0E+00	STEAM LINE BREAK/LEAK (CV SIDE)
			EFWOO01006AB	1.7E-02	(HE) FAIL TO CHANGEOVER EFW PIT
			HPIOO02FWBD-S	2.6E-03	(HE) FAIL TO OPEN SAFETY DEPRESSURIZATION VALVE
			VCWTMPZ001B	8.0E-03	VWS-MPP-001B (B-ESSENTIAL CHILLED WATER PUMP) TEST & MAINTENANCE
10	2.6E-07	2.1	!14LOFF_IF	1.0E+00	LOSS OF FEED WATER FLOW
			EFWOO01006AB	1.7E-02	(HE) FAIL TO CHANGEOVER EFW PIT
			EFWTMPA001B	4.0E-03	EFS-MPP-001B (B-EFW PUMP) TEST & MAINTENANCE
			HPIOO02FWBD	3.8E-03	(HE) FAIL TO OPEN SAFETY DEPRESSURIZATION VALVE AND START SAFETY INJECTION PUMP

Table 19.1-71 Basic Events (Hardware Failure and Human Error) FV Importance for Flood (Sheet 1 of 4)

Rank	Basic Event ID	Basic Event Description	Basic Event Probability	FV Importance	RAW
1	EFWOO01006AB	(HE) FAIL TO CHANGEOVER EFW PIT	1.7E-02	7.9E-01	4.7E+01
2	HPIOO02FWBD-S	(HE) FAIL TO OPEN SAFETY DEPRESSURIZATION VALVE	2.6E-03	4.4E-01	1.7E+02
3	SGNOO01S	(HE) FAIL TO START SAFETY INJECTION PUMP BY DAS	5.7E-02	2.0E-01	4.3E+00
4	RCP----SEAL	RCP SEAL LOCA	1.0E+00	1.0E-01	1.0E+00
5	HPITMPI001C	SIS-MPP-001C (C-SI PUMP) TEST & MAINTENANCE	4.0E-03	4.4E-02	1.2E+01
6	CHIOO01CHIB	(HE) FAIL TO START THE STANDBY CHARGING INJECTION PUMP B	2.6E-03	4.1E-02	1.7E+01
7	RTPDASF	DAS FAILURE	1.0E-02	3.5E-02	4.5E+00
8	OPSLOOP	CONSEQUENTIAL LOOP GIVEN A REACTOR TRIP	5.3E-03	3.5E-02	7.5E+00
9	SWSTMPE001D	EWS-MPP-001D (D-ESW PUMP) TEST & MAINTENANCE	1.2E-02	3.4E-02	3.8E+00
10	EFWXVOD006B	EFS-VLV-006B FAIL TO OPEN	7.0E-04	3.2E-02	4.6E+01
11	EFWXVCD007B	EFS-VLV-007B FAIL TO CLOSE	7.0E-04	3.2E-02	4.6E+01
12	HPIOO02FWBD	(HE) FAIL TO OPEN SAFETY DEPRESSURIZATION VALVE AND START SAFETY INJECTION PUMP	3.8E-03	2.9E-02	8.7E+00
13	CHIPMBD001B-R	CVS-MPP-001B (B-CHI PUMP) FAIL TO RE-START	1.8E-03	2.8E-02	1.7E+01
14	RTPNWIFRT5001D2	RPS-D GROUP-2 NETWORK I/F CARD FOR UNIT BUS RT5001D2 FAILURE	5.2E-03	2.7E-02	6.1E+00

Table 19.1-71 Basic Events (Hardware Failure and Human Error) FV Importance for Flood (Sheet 2 of 4)

Rank	Basic Event ID	Basic Event Description	Basic Event Probability	FV Importance	RAW
15	RTPNWIFRT5002D2	RPS-D GROUP-2 NETWORK I/F CARD FOR SAFETY BUS RT5002D2 FAILURE	5.2E-03	2.7E-02	6.1E+00
16	RTPNWIFRT5002C2	RPS-C GROUP-2 NETWORK I/F CARD FOR SAFETY BUS RT5002C2 FAILURE	5.2E-03	2.7E-02	6.1E+00
17	RTPNWIFRT5001C2	RPS-C GROUP-2 NETWORK I/F CARD FOR UNIT BUS RT5001C2 FAILURE	5.2E-03	2.7E-02	6.1E+00
18	RSSTMRP001C	RHS-MHX-001C (C-CS/RHR HX) TEST & MAINTENANCE	5.0E-03	2.6E-02	6.1E+00
19	HPICF4PMAD001-ALL	SIS-MPP-001A,B,C,D (SI PUMP) FAIL TO START (CCF)	1.1E-04	2.5E-02	2.2E+02
20	RTPCPUCRT5001C2	RPS-C GROUP-2 CPU CARD RT5001C2 FAILURE	4.4E-03	2.3E-02	6.1E+00
21	RTPCPUCRT5001D2	RPS-D GROUP-2 CPU CARD RT5001D2 FAILURE	4.4E-03	2.3E-02	6.1E+00
22	PZRCF2MVOD117-ALL	RCS-MOV-117A,B FAIL TO OPEN (CCF)	1.3E-04	2.2E-02	1.8E+02
23	RSSTMPI001C	RHS-MPP-001C (C-CS/RHR PUMP) TEST & MAINTENANCE	4.0E-03	2.1E-02	6.1E+00
24	CWSTMRC001D	NCS-MHX-001D (D-CCW HX) TEST & MAINTENANCE	7.0E-03	2.0E-02	3.8E+00
25	CWSTMPC001D	NCS-MPP-001D (D-CCW PUMP) TEST & MAINTENANCE	6.0E-03	1.7E-02	3.8E+00
26	RTPBSIFRT5001C2	RPS-C GROUP-2 BUS MASTER CARD FOR RPS COMMUNICATION 5001C2 FAILURE	3.0E-03	1.5E-02	6.1E+00
27	RTPBSIFRT5003C2	RPS-C GROUP-2 BUS MASTER CARD FOR I/O 5003C2 FAILURE	3.0E-03	1.5E-02	6.1E+00
28	RTPBSIFRT5002C2	RPS-C GROUP-2 BUS MASTER CARD FOR ESFAS OUTPUT 5002C2 FAILURE	3.0E-03	1.5E-02	6.1E+00

Table 19.1-71 Basic Events (Hardware Failure and Human Error) FV Importance for Flood (Sheet 3 of 4)

Rank	Basic Event ID	Basic Event Description	Basic Event Probability	FV Importance	RAW
29	RTPBSIFRT5001D2	RPS-D GROUP-2 BUS MASTER CARD FOR RPS COMMUNICATION 5001D2 FAILURE	3.0E-03	1.5E-02	6.1E+00
30	RTPBSIFRT5002D2	RPS-D GROUP-2 BUS MASTER CARD FOR ESFAS OUTPUT 5002D2 FAILURE	3.0E-03	1.5E-02	6.1E+00
31	RTPBSIFRT5003D2	RPS-D GROUP-2 BUS MASTER CARD FOR I/O 5003D2 FAILURE	3.0E-03	1.5E-02	6.1E+00
32	HPIPMAD001C	SIS-MPP-001C (C-SI PUMP) FAIL TO START	1.3E-03	1.5E-02	1.3E+01
33	RTPSMCART5001D2	RPS-D GROUP-2 SYSTEM MANAGEMENT CARD RT5001D2 FAILURE	2.5E-03	1.3E-02	6.1E+00
34	RTPSMCART5001C2	RPS-C GROUP-2 SYSTEM MANAGEMENT CARD RT5001C2 FAILURE	2.5E-03	1.3E-02	6.1E+00
35	RSSOO01CSP	(HE) FAIL TO START CV SPRAY SYSTEM	5.0E-03	1.0E-02	3.0E+00
36	SGNBTSWCCF2	GROUP-2 APPLICATION SOFTWARE CCF	1.0E-05	9.9E-03	9.9E+02
37	SGNTMSPP10012D	CONTAINMENT PRESSURE SENSOR P10012D BYPASS FOR REPAIRS	9.9E-03	9.0E-03	1.9E+00
38	SGNTMSPP10012C	CONTAINMENT PRESSURE SENSOR P10012C BYPASS FOR REPAIRS	9.9E-03	9.0E-03	1.9E+00
39	EFWPTAD001D	EFS-MPP-001D (D-EFW PUMP) FAIL TO START	6.5E-03	9.0E-03	2.4E+00
40	RSSPMAD001C	RHS-MPP-001C (C-CS/RHR PUMP) FAIL TO START	1.4E-03	8.1E-03	6.7E+00
41	RSSCF4MVOD145-ALL	NCS-MOV-145A,B,C,D FAIL TO OPEN (CCF)	8.4E-05	6.8E-03	8.2E+01
42	RSSCF4MVOD004-ALL	CSS-MOV-004A,B,C,D FAIL TO OPEN (CCF)	8.4E-05	6.8E-03	8.2E+01

Table 19.1-71 Basic Events (Hardware Failure and Human Error) FV Importance for Flood (Sheet 4 of 4)

Rank	Basic Event ID	Basic Event Description	Basic Event Probability	FV Importance	RAW
43	PZRMVOD117B	RCS-MOV-117B FAIL TO OPEN	8.7E-04	6.1E-03	8.0E+00
44	SWSTMPE001B	EWS-MPP-001B (B-ESW PUMP) TEST & MAINTENANCE	1.2E-02	6.1E-03	1.5E+00
45	EPSOO02RDG	(HE) FAIL TO CONNECT THE ALTERNATE AC POWER SOURCE TO CLASS 1E BUS	2.1E-02	6.0E-03	1.3E+00
46	EPSDLLREGTGC	C-CLASS 1E GTG FAIL TO LOAD AND RUN AFTER FIRST HOUR OF OPERATION	1.7E-02	6.0E-03	1.4E+00
47	VCWCHBD001B	VWS-MEQ-001B (B-ESSENTIAL CHILLER UNIT) FAIL TO START	1.0E-02	5.1E-03	1.5E+00
48	SWSPMBD001D	EWS-MPP-001D (D-ESW PUMP) FAIL TO START	1.9E-03	5.1E-03	3.7E+00
49	RSSMVOD004C	CSS-MOV-004C FAIL TO OPEN	9.0E-04	5.0E-03	6.6E+00
50	RSSMVOD145C	NCS-MOV-145C FAIL TO OPEN	9.0E-04	5.0E-03	6.6E+00

Table 19.1-72 Basic Events (Hardware Failure, Human Error) RAW for Flood (Sheet 1 of 61)

Rank	Basic Event ID	Basic Event Description	Basic Event Probability	FV Importance	RAW
1	RTPBTSWCCF	BASIC SOFTWARE CCF	1.0E-07	1.5E-03	1.5E+04
2	SGNBTSWCCF2	GROUP-2 APPLICATION SOFTWARE CCF	1.0E-05	9.9E-03	9.9E+02
3	SGNBTHWCCF	DIGITAL I&C HARDWARE CCF	2.1E-06	1.9E-03	8.7E+02
4	EPSCF4CBSO52LC-ALL	EPS 52/LCA,B,C,D (BREAKER) SPURIOUS OPEN (CCF)	1.6E-07	1.0E-04	6.5E+02
5	EPSCF4CBSO52STH-ALL	EPS 52/STHA,B,C,D (BREAKER) SPURIOUS OPEN (CCF)	1.6E-07	1.0E-04	6.5E+02
6	EPSCF4CBSO52STL-ALL	EPS 52/STLA,B,C,D (BREAKER) SPURIOUS OPEN (CCF)	1.6E-07	1.0E-04	6.5E+02
7	EPSBSFFMVCC	C-CLASS 1E MOV 480V MCC FAILURE	5.8E-06	1.8E-03	3.1E+02
8	EPSCF4CBSO52STL-34	EPS 52/STLC,D (BREAKER) SPURIOUS OPEN (CCF)	3.4E-08	9.2E-06	2.7E+02
9	EPSCF4CBSO52STH-24	EPS 52/STHC,D (BREAKER) SPURIOUS OPEN (CCF)	3.4E-08	9.2E-06	2.7E+02
10	SWSCF4PMYR-FF	EWS-MPP-001A,B,C,D (A,B,C,D-ESW PUMP) FAIL TO RUN (CCF)	1.2E-08	3.1E-06	2.6E+02
11	HPICF4PMAD001-ALL	SIS-MPP-001A,B,C,D (SI PUMP) FAIL TO START (CCF)	1.1E-04	2.5E-02	2.2E+02
12	HPICF4PMSR001-ALL	SIS-MPP-001A,B,C,D (SI PUMP) FAIL TO RUN DURING FIRST HOUR OF OPERATION (CCF)	8.5E-06	1.8E-03	2.2E+02

Table 19.1-72 Basic Events (Hardware Failure, Human Error) RAW for Flood (Sheet 2 of 61)

Rank	Basic Event ID	Basic Event Description	Basic Event Probability	FV Importance	RAW
13	RWSCF4SUPR001-ALL	SIS-SST-001A,B,C,D (ESS/CS STRAINER) PLUG DURING OPERATION (CCF)	9.7E-06	2.1E-03	2.2E+02
14	EPSCF4CBSO52LC-23	EPS 52/LCC,D (BREAKER) SPURIOUS OPEN (CCF)	3.4E-08	7.3E-06	2.2E+02
15	HPICF4PMLR001-ALL	SIS-MPP-001A,B,C,D (SI PUMP) FAIL TO RUN AFTER FIRST HOUR OF OPERATION (CCF)	2.9E-06	6.3E-04	2.1E+02
16	HPICF4PMAD001-234	SIS-MPP-001A,C,D (SI PUMP) FAIL TO START (CCF)	9.5E-06	2.0E-03	2.1E+02
17	HPICF4PMAD001-23	SIS-MPP-001C,D (SI PUMP) FAIL TO START (CCF)	2.2E-05	4.6E-03	2.1E+02
18	EPSCF4CBSO52STH-134	EPS 52/STHA,B,D (BREAKER) SPURIOUS OPEN (CCF)	2.9E-08	6.2E-06	2.1E+02
19	EPSCF4CBSO52STL-124	EPS 52/STLA,B,D (BREAKER) SPURIOUS OPEN (CCF)	2.9E-08	6.2E-06	2.1E+02
20	HPICF4PMAD001-123	SIS-MPP-001B,C,D (SI PUMP) FAIL TO START (CCF)	9.5E-06	2.0E-03	2.1E+02
21	HPICF4CVOD004-ALL	SIS-VLV-004A,B,C,D FAIL TO OPEN (CCF)	1.0E-06	2.1E-04	2.1E+02
22	HPICF4CVOD010-ALL	SIS-VLV-010A,B,C,D FAIL TO OPEN (CCF)	1.0E-06	2.1E-04	2.1E+02
23	HPICF4CVOD013-ALL	SIS-VLV-013A,B,C,D FAIL TO OPEN (CCF)	1.0E-06	2.1E-04	2.1E+02
24	HPICF4CVOD012-ALL	SIS-VLV-012A,B,C,D FAIL TO OPEN (CCF)	1.0E-06	2.1E-04	2.1E+02
25	HPICF4PMSR001-234	SIS-MPP-001A,C,D (SI PUMP) FAIL TO RUN DURING FIRST HOUR OF OPERATION (CCF)	3.3E-06	6.9E-04	2.1E+02

Table 19.1-72 Basic Events (Hardware Failure, Human Error) RAW for Flood (Sheet 3 of 61)

Rank	Basic Event ID	Basic Event Description	Basic Event Probability	FV Importance	RAW
26	HPICF4PMSR001-23	SIS-MPP-001C,D (SI PUMP) FAIL TO RUN DURING FIRST HOUR OF OPERATION (CCF)	3.6E-06	7.5E-04	2.1E+02
27	RWSCF4SUPR001-234	SIS-SST-001A,C,D (ESS/CS STRAINER) PLUG DURING OPERATION (CCF)	3.7E-06	7.7E-04	2.1E+02
28	HPICF4PMSR001-123	SIS-MPP-001B,C,D (SI PUMP) FAIL TO RUN DURING FIRST HOUR OF OPERATION (CCF)	3.3E-06	6.9E-04	2.1E+02
29	RWSCF4SUPR001-123	SIS-SST-001B,C,D (ESS/CS STRAINER) PLUG DURING OPERATION (CCF)	3.7E-06	7.6E-04	2.1E+02
30	RWSCF4SUPR001-23	SIS-SST-001C,D (ESS/CS STRAINER) PLUG DURING OPERATION (CCF)	3.0E-06	6.2E-04	2.1E+02
31	EPSCF4CBSO52STL-134	EPS 52/STLA,C,D (BREAKER) SPURIOUS OPEN (CCF)	2.9E-08	6.0E-06	2.1E+02
32	EPSCF4CBSO52STH-124	EPS 52/STHA,C,D (BREAKER) SPURIOUS OPEN (CCF)	2.9E-08	6.0E-06	2.1E+02
33	HPICF4PMLR001-234	SIS-MPP-001A,C,D (SI PUMP) FAIL TO RUN AFTER FIRST HOUR OF OPERATION (CCF)	1.1E-06	2.3E-04	2.1E+02
34	HPICF4PMLR001-23	SIS-MPP-001C,D (SI PUMP) FAIL TO RUN AFTER FIRST HOUR OF OPERATION (CCF)	1.2E-06	2.5E-04	2.1E+02
35	HPICF4PMLR001-123	SIS-MPP-001B,C,D (SI PUMP) FAIL TO RUN AFTER FIRST HOUR OF OPERATION (CCF)	1.1E-06	2.3E-04	2.0E+02
36	HPICF4CVOD012-234	SIS-VLV-012A,C,D FAIL TO OPEN (CCF)	2.7E-07	5.4E-05	2.0E+02
37	HPICF4CVOD013-123	SIS-VLV-013B,C,D FAIL TO OPEN (CCF)	2.7E-07	5.4E-05	2.0E+02
38	HPICF4CVOD013-234	SIS-VLV-013A,C,D FAIL TO OPEN (CCF)	2.7E-07	5.4E-05	2.0E+02

Table 19.1-72 Basic Events (Hardware Failure, Human Error) RAW for Flood (Sheet 4 of 61)

Rank	Basic Event ID	Basic Event Description	Basic Event Probability	FV Importance	RAW
39	HPICF4CVOD010-234	SIS-VLV-010A,C,D FAIL TO OPEN (CCF)	2.7E-07	5.4E-05	2.0E+02
40	HPICF4CVOD010-123	SIS-VLV-010B,C,D FAIL TO OPEN (CCF)	2.7E-07	5.4E-05	2.0E+02
41	HPICF4CVOD012-123	SIS-VLV-012B,C,D FAIL TO OPEN (CCF)	2.7E-07	5.4E-05	2.0E+02
42	HPICF4CVOD004-123	SIS-VLV-004B,C,D FAIL TO OPEN (CCF)	2.7E-07	5.4E-05	2.0E+02
43	HPICF4CVOD004-234	SIS-VLV-004A,C,D FAIL TO OPEN (CCF)	2.7E-07	5.4E-05	2.0E+02
44	HPICF4CVOD013-23	SIS-VLV-013C,D FAIL TO OPEN (CCF)	1.6E-07	3.2E-05	2.0E+02
45	HPICF4CVOD010-23	SIS-VLV-010C,D FAIL TO OPEN (CCF)	1.6E-07	3.2E-05	2.0E+02
46	HPICF4CVOD004-23	SIS-VLV-004C,D FAIL TO OPEN (CCF)	1.6E-07	3.2E-05	2.0E+02
47	HPICF4CVOD012-23	SIS-VLV-012C,D FAIL TO OPEN (CCF)	1.6E-07	3.2E-05	2.0E+02
48	EPSCF4CBSO52LC-123	EPS 52/LCB,C,D (BREAKER) SPURIOUS OPEN (CCF)	2.9E-08	5.6E-06	1.9E+02
49	EPSCF4CBSO52STL-234	EPS 52/STLB,C,D (BREAKER) SPURIOUS OPEN (CCF)	2.9E-08	5.6E-06	1.9E+02
50	EPSCF4CBSO52LC-234	EPS 52/LCA,C,D (BREAKER) SPURIOUS OPEN (CCF)	2.9E-08	5.6E-06	1.9E+02
51	EPSCF4CBSO52STH-234	EPS 52/STHB,C,D (BREAKER) SPURIOUS OPEN (CCF)	2.9E-08	5.6E-06	1.9E+02

Table 19.1-72 Basic Events (Hardware Failure, Human Error) RAW for Flood (Sheet 5 of 61)

Rank	Basic Event ID	Basic Event Description	Basic Event Probability	FV Importance	RAW
52	PZRCF2MVOD117-ALL	RCS-MOV-117A,B FAIL TO OPEN (CCF)	1.3E-04	2.2E-02	1.8E+02
53	RWSXVEL001	RWS-VLV-001 EXTERNAL LEAK LARGE	7.2E-08	1.2E-05	1.7E+02
54	RWSXVEL024	RWS-VLV-024 EXTERNAL LEAK LARGE	7.2E-08	1.2E-05	1.7E+02
55	RWSCVEL023	RWS-VLV-023 EXTERNAL LEAK LARGE	4.8E-08	8.2E-06	1.7E+02
56	RWSMVEL002	RWS-MOV-002 EXTERNAL LEAK LARGE	2.4E-08	4.1E-06	1.7E+02
57	RWSPNELPIPE2	RWS PIPING BETWEEN RWSP AND RWS-VLV-002 EXTERNAL LEAK LARGE	6.0E-10	1.0E-07	1.7E+02
58	RWSPNELPIPE1	RWS PIPING BETWEEN RWSP AND RWS-VLV-023 EXTERNAL LEAK LARGE	6.0E-10	1.0E-07	1.7E+02
59	HPIOO02FWBD-S	(HE) FAIL TO OPEN SAFETY DEPRESSUR-IZATION VALVE	2.6E-03	4.4E-01	1.7E+02
60	EPSBSFFMVCD	D-CLASS 1E MOV 480V MCC1 FAILURE	5.8E-06	9.2E-04	1.6E+02
61	EPSCF2CBSO52LL1-ALL	EPS 52/LLAA,LLAD (BREAKER) SPURIOUS OPEN (CCF)	2.8E-07	4.3E-05	1.5E+02
62	EPSCF2CBSO52LC1-ALL	EPS 52/LCA1,D1 (BREAKER) SPURIOUS CLOSE (CCF)	2.8E-07	4.3E-05	1.5E+02
63	EPSCF2CBSO52LL2-ALL	EPS 52/LLDA,LLDD (BREAKER) SPURIOUS OPEN (CCF)	2.8E-07	4.3E-05	1.5E+02
64	RWSTNEL001	RWS-MCP-001 (RWSP) EXTERNAL LEAK LARGE	4.8E-08	7.0E-06	1.5E+02

Table 19.1-72 Basic Events (Hardware Failure, Human Error) RAW for Flood (Sheet 6 of 61)

Rank	Basic Event ID	Basic Event Description	Basic Event Probability	FV Importance	RAW
65	CWSCF4RHPR-FF	NCS-MHX-001A,B,C,D (A,B,C,D-CCW HX) PLUG / FOUL (CCF)	3.6E-08	4.6E-06	1.3E+02
66	EPSCF4CBSO52STH-14	EPS 52/STHA,D (BREAKER) SPURIOUS OPEN (CCF)	3.4E-08	4.3E-06	1.3E+02
67	EPSCF4CBSO52STL-14	EPS 52/STLA,D (BREAKER) SPURIOUS OPEN (CCF)	3.4E-08	4.3E-06	1.3E+02
68	HPIMVEL001A	SIS-MOV-001A EXTERNAL LEAK LARGE	2.4E-08	2.9E-06	1.2E+02
69	HPIMVEL001B	SIS-MOV-001B EXTERNAL LEAK LARGE	2.4E-08	2.9E-06	1.2E+02
70	HPIMVEL001C	SIS-MOV-001C EXTERNAL LEAK LARGE	2.4E-08	2.9E-06	1.2E+02
71	HPIMVEL001D	SIS-MOV-001D EXTERNAL LEAK LARGE	2.4E-08	2.9E-06	1.2E+02
72	RSSMVELCSS001A	CSS-MOV-001A EXTERNAL LEAK LARGE	2.4E-08	2.7E-06	1.1E+02
73	RSSMVELCSS001D	CSS-MOV-001D EXTERNAL LEAK LARGE	2.4E-08	2.7E-06	1.1E+02
74	RSSMVELCSS001C	CSS-MOV-001C EXTERNAL LEAK LARGE	2.4E-08	2.7E-06	1.1E+02
75	RSSMVELCSS001B	CSS-MOV-001B EXTERNAL LEAK LARGE	2.4E-08	2.7E-06	1.1E+02
76	EPSBSFFMCD	D-CLASS 1E 6.9KV SWITCHGEAR FAILURE	5.8E-06	6.2E-04	1.1E+02
77	EPSBSFFDCCD	D-CLASS 1E DC SWITCHBOARD	5.8E-06	5.0E-04	8.7E+01

Table 19.1-72 Basic Events (Hardware Failure, Human Error) RAW for Flood (Sheet 7 of 61)

Rank	Basic Event ID	Basic Event Description	Basic Event Probability	FV Importance	RAW
78	EFWCF2CVOD008-ALL	EFS-VLV-008A,B FAIL TO OPEN (CCF)	2.4E-06	2.0E-04	8.5E+01
79	EFWCF4CVOD018-ALL	EFS-VLV-018A,B,C,D FAIL TO OPEN (CCF)	1.7E-06	1.4E-04	8.4E+01
80	EFWCF4CVOD012-ALL	EFS-VLV-012A,B,C,D FAIL TO OPEN (CCF)	1.7E-06	1.4E-04	8.4E+01
81	RTPCF4ICYRRT7001-ALL	SG WATER LEVEL SENSOR (NARROW RANGE) CCF	1.4E-06	1.1E-04	8.3E+01
82	RSSCF4MVOD145-ALL	NCS-MOV-145A,B,C,D FAIL TO OPEN (CCF)	8.4E-05	6.8E-03	8.2E+01
83	RSSCF4MVOD004-ALL	CSS-MOV-004A,B,C,D FAIL TO OPEN (CCF)	8.4E-05	6.8E-03	8.2E+01
84	RSSCF4CVOD005-ALL	CSS-VLV-005A,B,C,D FAIL TO OPEN (CCF)	4.3E-07	3.5E-05	8.2E+01
85	RSSCF4PMAD001-ALL	RHS-MPP-001A,B,C,D (CS/RHR PUMP) FAIL TO START (CCF)	1.9E-05	1.5E-03	8.0E+01
86	EFWCF4MVFC017-ALL	EFS-MOV-017A,B,C,D FAIL TO CONTROL (CCF)	8.5E-07	6.7E-05	8.0E+01
87	RSSCF4PMAD001-12	RHS-MPP-001C,D (CS/RHR PUMP) FAIL TO START (CCF)	1.3E-05	9.9E-04	8.0E+01
88	RSSCF4MVOD145-23	NCS-MOV-145C,D FAIL TO OPEN (CCF)	5.7E-06	4.4E-04	7.9E+01
89	RSSCF4PMAD001-124	RHS-MPP-001B,C,D (CS/RHR PUMP) FAIL TO START (CCF)	6.3E-06	4.8E-04	7.9E+01
90	RSSCF4PMAD001-123	RHS-MPP-001A,C,D (CS/RHR PUMP) FAIL TO START (CCF)	6.3E-06	4.8E-04	7.9E+01

Table 19.1-72 Basic Events (Hardware Failure, Human Error) RAW for Flood (Sheet 8 of 61)

Rank	Basic Event ID	Basic Event Description	Basic Event Probability	FV Importance	RAW
91	RSSCF4MVOD004-23	CSS-MOV-004C,D FAIL TO OPEN (CCF)	5.7E-06	4.4E-04	7.8E+01
92	RSSCF4CVOD005-23	CSS-VLV-005C,D FAIL TO OPEN (CCF)	2.0E-07	1.6E-05	7.8E+01
93	RSSCF4PMSR001-ALL	RHS-MPP-001A,B,C,D (CS/RHR PUMP) FAIL TO RUN DURING FIRST HOUR OF OPERA-	5.0E-06	3.9E-04	7.8E+01
94	RSSCF4PMLR001-ALL	RHS-MPP-001A,B,C,D (CS/RHR PUMP) FAIL TO RUN AFTER FIRST HOUR OF OPERA-	1.7E-06	1.3E-04	7.8E+01
95	RSSCF4RHPR001-ALL	RHS-MHX-001A,B,C,D (CS/RHR HX) PLUG / FOUL (CCF)	4.8E-06	3.7E-04	7.8E+01
96	RSSCF4CVOD004-ALL	RHS-VLV-004A,B,C,D FAIL TO OPEN (CCF)	4.3E-07	3.3E-05	7.8E+01
97	RSSCF4PMSR001-23	RHS-MPP-001C,D (CS/RHR PUMP) FAIL TO RUN DURING FIRST HOUR OF OPERATION	3.3E-06	2.6E-04	7.8E+01
98	RSSCF4PMLR001-23	RHS-MPP-001C,D (CS/RHR PUMP) FAIL TO RUN AFTER FIRST HOUR OF OPERATION	1.2E-06	8.8E-05	7.8E+01
99	RSSCF4PMSR001-234	RHS-MPP-001A,C,D (CS/RHR PUMP) FAIL TO RUN DURING FIRST HOUR OF OPERATION	1.7E-06	1.2E-04	7.6E+01
100	RSSCF4PMSR001-123	RHS-MPP-001B,C,D (CS/RHR PUMP) FAIL TO RUN DURING FIRST HOUR OF OPERATION	1.7E-06	1.2E-04	7.6E+01
101	RSSCF4PMLR001-123	RHS-MPP-001B,C,D (CS/RHR PUMP) FAIL TO RUN AFTER FIRST HOUR OF OPERATION	5.8E-07	4.3E-05	7.6E+01
102	RSSCF4PMLR001-234	RHS-MPP-001A,C,D (CS/RHR PUMP) FAIL TO RUN AFTER FIRST HOUR OF OPERATION	5.8E-07	4.3E-05	7.6E+01
103	RSSCF4MVOD145-234	NCS-MOV-145A,C,D FAIL TO OPEN (CCF)	1.5E-06	1.1E-04	7.6E+01

Table 19.1-72 Basic Events (Hardware Failure, Human Error) RAW for Flood (Sheet 9 of 61)

Rank	Basic Event ID	Basic Event Description	Basic Event Probability	FV Importance	RAW
104	RSSCF4MVOD145-123	NCS-MOV-145B,C,D FAIL TO OPEN (CCF)	1.5E-06	1.1E-04	7.6E+01
105	RSSCF4MVOD004-123	CSS-MOV-004B,C,D FAIL TO OPEN (CCF)	1.5E-06	1.1E-04	7.5E+01
106	RSSCF4MVOD004-234	CSS-MOV-004A,C,D FAIL TO OPEN (CCF)	1.5E-06	1.1E-04	7.5E+01
107	RSSCF4CVOD005-234	CSS-VLV-005A,C,D FAIL TO OPEN (CCF)	2.2E-07	1.6E-05	7.5E+01
108	RSSCF4CVOD005-123	CSS-VLV-005B,C,D FAIL TO OPEN (CCF)	2.2E-07	1.6E-05	7.5E+01
109	EFWCF4MVFC017-124	EFS-MOV-017A,C,D FAIL TO CONTROL (CCF)	2.8E-07	2.1E-05	7.5E+01
110	EFWCF4MVFC017-123	EFS-MOV-017A,B,D FAIL TO CONTROL (CCF)	2.8E-07	2.1E-05	7.5E+01
111	EFWCF4MVFC017-234	EFS-MOV-017A,B,C FAIL TO CONTROL (CCF)	2.8E-07	2.1E-05	7.5E+01
112	EFWCF4MVFC017-134	EFS-MOV-017B,C,D FAIL TO CONTROL (CCF)	2.8E-07	2.1E-05	7.5E+01
113	RSSCF4CVOD004-23	RHS-VLV-004C,D FAIL TO OPEN (CCF)	2.0E-07	1.3E-05	6.7E+01
114	RSSCF4RHPR001-23	RHS-MHX-001C,D (CS/RHR HX) PLUG / FOUL (CCF)	1.7E-07	1.2E-05	6.7E+01
115	RSSCF4CVOD004-123	RHS-VLV-004B,C,D FAIL TO OPEN (CCF)	2.2E-07	1.4E-05	6.5E+01
116	RSSCF4CVOD004-234	RHS-VLV-004A,C,D FAIL TO OPEN (CCF)	2.2E-07	1.4E-05	6.5E+01

Table 19.1-72 Basic Events (Hardware Failure, Human Error) RAW for Flood (Sheet 10 of 61)

Rank	Basic Event ID	Basic Event Description	Basic Event Probability	FV Importance	RAW
117	RSSCF4RHPR001-234	RHS-MHX-001A,C,D (CS/RHR HX) PLUG / FOUL (CCF)	6.4E-08	4.1E-06	6.5E+01
118	RSSCF4RHPR001-123	RHS-MHX-001B,C,D (CS/RHR HX) PLUG / FOUL (CCF)	6.4E-08	4.1E-06	6.5E+01
119	EFWXVEL006B	EFS-VLV-006B EXTERNAL LEAK LARGE	7.2E-08	3.7E-06	5.2E+01
120	EFWXVEL006A	EFS-VLV-006A EXTERNAL LEAK LARGE	7.2E-08	3.7E-06	5.2E+01
121	EFWCF4CVOD018-234	EFS-VLV-018A,C,D FAIL TO OPEN (CCF)	6.2E-08	3.2E-06	5.2E+01
122	EFWCF4CVOD018-124	EFS-VLV-018A,B,C FAIL TO OPEN (CCF)	6.2E-08	3.2E-06	5.2E+01
123	EFWCF4CVOD018-123	EFS-VLV-018B,C,D FAIL TO OPEN (CCF)	6.2E-08	3.2E-06	5.2E+01
124	EFWCF4CVOD018-134	EFS-VLV-018A,B,D FAIL TO OPEN (CCF)	6.2E-08	3.2E-06	5.2E+01
125	EPSCBFO52UAT-ACD	EPS 52/UATA,C,D (BREAKER) FAIL TO OPEN (CCF)	5.2E-06	2.5E-04	5.0E+01
126	EPSCBFO52RAT-ACD	EPS 52/RATA,C,D (BREAKER) FAIL TO OPEN (CCF)	5.2E-06	2.5E-04	5.0E+01
127	EPSCF4CBSC52UAT-134	EPS 52/UATA,C,D (BREAKER) SPURIOUS CLOSE (CCF)	2.9E-08	1.4E-06	5.0E+01
128	EPSCF4CBSC52RAT-134	EPS 52/RATA,C,D (BREAKER) SPURIOUS CLOSE (CCF)	2.9E-08	1.4E-06	5.0E+01
129	EPSCBFO52UAT-BCD	EPS 52/UATB,C,D (BREAKER) FAIL TO OPEN (CCF)	5.2E-06	2.5E-04	4.9E+01

Table 19.1-72 Basic Events (Hardware Failure, Human Error) RAW for Flood (Sheet 11 of 61)

Rank	Basic Event ID	Basic Event Description	Basic Event Probability	FV Importance	RAW
130	EPSCBFO52RAT-BCD	EPS 52/RATB,C,D (BREAKER) FAIL TO OPEN (CCF)	5.2E-06	2.5E-04	4.9E+01
131	EPSCF4CBSC52UAT-234	EPS 52/UATB,C,D (BREAKER) SPURIOUS CLOSE (CCF)	2.9E-08	1.4E-06	4.9E+01
132	EPSCF4CBSC52RAT-234	EPS 52/RATB,C,D (BREAKER) SPURIOUS CLOSE (CCF)	2.9E-08	1.4E-06	4.9E+01
133	EPSCBFO52RAT-CD	EPS 52/RATC,D (BREAKER) FAIL TO OPEN (CCF)	5.0E-06	2.4E-04	4.9E+01
134	EPSCBFO52UAT-CD	EPS 52/UATC,D (BREAKER) FAIL TO OPEN (CCF)	5.0E-06	2.4E-04	4.9E+01
135	EPSCF4CBSC52RAT-34	EPS 52/RATC,D (BREAKER) SPURIOUS CLOSE (CCF)	3.4E-08	1.6E-06	4.9E+01
136	EPSCF4CBSC52UAT-34	EPS 52/UATC,D (BREAKER) SPURIOUS CLOSE (CCF)	3.4E-08	1.6E-06	4.9E+01
137	EFWCF4MVFC017-34	EFS-MOV-017B,C FAIL TO CONTROL (CCF)	5.6E-07	2.6E-05	4.7E+01
138	EFWOO01006AB	(HE) FAIL TO CHANGEOVER EFW PIT	1.7E-02	7.9E-01	4.7E+01
139	EFWXVOD006B	EFS-VLV-006B FAIL TO OPEN	7.0E-04	3.2E-02	4.6E+01
140	EFWXVPR006B	EFS-VLV-006B PLUG	2.4E-06	1.1E-04	4.6E+01
141	EFWXVCD007B	EFS-VLV-007B FAIL TO CLOSE	7.0E-04	3.2E-02	4.6E+01
142	EPSCF4CBSC52UAT-ALL	EPS 52/UATA,B,C,D (BREAKER) SPURIOUS CLOSE (CCF)	1.6E-07	7.0E-06	4.5E+01

Table 19.1-72 Basic Events (Hardware Failure, Human Error) RAW for Flood (Sheet 12 of 61)

Rank	Basic Event ID	Basic Event Description	Basic Event Probability	FV Importance	RAW
143	EPSCF4CBSC52RAT-ALL	EPS 52/RATA,B,C,D (BREAKER) SPURIOUS CLOSE (CCF)	1.6E-07	7.0E-06	4.5E+01
144	EFWCVOD008B	EFS-VLV-008B FAIL TO OPEN	9.6E-06	4.2E-04	4.4E+01
145	EFWCVPR008B	EFS-VLV-008B PLUG	2.4E-06	1.0E-04	4.4E+01
146	EFWCVEL008B	EFS-VLV-008B EXTERNAL LEAK LARGE	4.8E-08	2.1E-06	4.4E+01
147	EFWCF4MVFC017-14	EFS-MOV-017C,D FAIL TO CONTROL (CCF)	5.6E-07	2.4E-05	4.4E+01
148	EFWCF4CVOD018-23	EFS-VLV-018C,D FAIL TO OPEN (CCF)	2.3E-07	9.7E-06	4.4E+01
149	EFWCF4MVFC017-13	EFS-MOV-017B,D FAIL TO CONTROL (CCF)	5.6E-07	2.4E-05	4.4E+01
150	EFWMVFC017C	EFS-MOV-017C FAIL TO CONTROL	6.9E-05	2.9E-03	4.4E+01
151	EFWMVFC017D	EFS-MOV-017D FAIL TO CONTROL	6.9E-05	2.9E-03	4.4E+01
152	EFWORPR046	EFS-FE-046 (ORIFICE) PLUG	2.4E-05	1.0E-03	4.4E+01
153	EFWORPR036	EFS-FE-036 (ORIFICE) PLUG	2.4E-05	1.0E-03	4.4E+01
154	EFWCVOD018D	EFS-VLV-018D FAIL TO OPEN	9.5E-06	4.0E-04	4.4E+01
155	EFWCVOD018C	EFS-VLV-018C FAIL TO OPEN	9.5E-06	4.0E-04	4.4E+01

Table 19.1-72 Basic Events (Hardware Failure, Human Error) RAW for Flood (Sheet 13 of 61)

Rank	Basic Event ID	Basic Event Description	Basic Event Probability	FV Importance	RAW
156	EFWMVPR017C	EFS-MOV-017C PLUG	2.4E-06	1.0E-04	4.4E+01
157	EFWCVPR018C	EFS-VLV-018C PLUG	2.4E-06	1.0E-04	4.4E+01
158	EFWMVPR019C	EFS-MOV-019C PLUG	2.4E-06	1.0E-04	4.4E+01
159	EFWMVPR019D	EFS-MOV-019D PLUG	2.4E-06	1.0E-04	4.4E+01
160	EFWCVPR018D	EFS-VLV-018D PLUG	2.4E-06	1.0E-04	4.4E+01
161	EFWMVPR017D	EFS-MOV-017D PLUG	2.4E-06	1.0E-04	4.4E+01
162	EFWMVCM017D	EFS-MOV-017D SPURIOUS CLOSE	9.6E-07	4.1E-05	4.4E+01
163	EFWMVCM017C	EFS-MOV-017C SPURIOUS CLOSE	9.6E-07	4.1E-05	4.4E+01
164	EFWMVCM019D	EFS-MOV-019D SPURIOUS CLOSE	9.6E-07	4.1E-05	4.4E+01
165	EFWMVCM019C	EFS-MOV-019C SPURIOUS CLOSE	9.6E-07	4.1E-05	4.4E+01
166	EFWMVIL017C	EFS-MOV-017C INTERNAL LEAK LARGE	7.2E-08	3.1E-06	4.4E+01
167	EFWMVIL017D	EFS-MOV-017D INTERNAL LEAK LARGE	7.2E-08	3.1E-06	4.4E+01
168	EFWCF4CVOD018-12	EFS-VLV-018B,C FAIL TO OPEN (CCF)	2.3E-07	9.0E-06	4.1E+01

Table 19.1-72 Basic Events (Hardware Failure, Human Error) RAW for Flood (Sheet 14 of 61)

Rank	Basic Event ID	Basic Event Description	Basic Event Probability	FV Importance	RAW
169	EFWCF4MVFC017-24	EFS-MOV-017A,CFAIL TO CONTROL (CCF)	5.6E-07	2.3E-05	4.1E+01
170	EFWXVPR007B	EFS-VLV-007B PLUG	2.4E-06	9.3E-05	4.0E+01
171	EFWXVEL009C	EFS-VLV-009C EXTERNAL LEAK LARGE	7.2E-08	2.8E-06	4.0E+01
172	EFWXVEL009D	EFS-VLV-009D EXTERNAL LEAK LARGE	7.2E-08	2.8E-06	4.0E+01
173	EFWXVEL007B	EFS-VLV-007B EXTERNAL LEAK LARGE	7.2E-08	2.8E-06	4.0E+01
174	EFWTNEL001B	EFS-MPT-001B (B-EFW PIT) EXTERNAL LEAK LARGE	4.8E-08	1.9E-06	4.0E+01
175	EFWPNELCSTB	EFS B-EFW PIT OUTLET PIPING EXTERNAL LEAK LARGE	6.0E-10	2.3E-08	4.0E+01
176	EFWCF4CVOD018-13	EFS-VLV-018B,D FAIL TO OPEN (CCF)	2.3E-07	8.4E-06	3.8E+01
177	EFWCF4MVFC017-12	EFS-MOV-017A,D FAIL TO CONTROL (CCF)	5.6E-07	2.1E-05	3.8E+01
178	EFWCF4CVOD018-24	EFS-VLV-018A,C FAIL TO OPEN (CCF)	2.3E-07	7.8E-06	3.6E+01
179	EFWCF4CVOD018-34	EFS-VLV-018A,D FAIL TO OPEN (CCF)	2.3E-07	7.2E-06	3.3E+01
180	EFWCF4CVOD012-24	EFS-VLV-012C,D FAIL TO OPEN (CCF)	2.3E-07	6.9E-06	3.2E+01
181	EFWXVEL026B	EFS-VLV-026B EXTERNAL LEAK LARGE	7.2E-08	2.2E-06	3.2E+01

Table 19.1-72 Basic Events (Hardware Failure, Human Error) RAW for Flood (Sheet 15 of 61)

Rank	Basic Event ID	Basic Event Description	Basic Event Probability	FV Importance	RAW
182	EFWPNELTESTB	EFS C,D-EFW PUMP TEST LINE PIPING EXTERNAL LEAK LARGE	6.0E-10	1.8E-08	3.2E+01
183	EFWCF4CVOD012-124	EFS-VLV-012B,C,D FAIL TO OPEN (CCF)	6.2E-08	1.9E-06	3.2E+01
184	SWSSTPRST001C	EWS-SST-001C (STRAINER) PLUG	1.7E-04	4.1E-03	2.5E+01
185	SWSXVPR508C	EWS-VLV-508C PLUG	2.4E-06	5.8E-05	2.5E+01
186	SWSCVPR502C	EWS-VLV-502C PLUG	2.4E-06	5.8E-05	2.5E+01
187	SWSMVPR503C	EWS-MOV-503C PLUG	2.4E-06	5.8E-05	2.5E+01
188	SWSXVPR506C	EWS-VLV-506C PLUG	2.4E-06	5.8E-05	2.5E+01
189	SWSMVCM503C	EWS-MOV-503C SPURIOUS CLOSE	9.6E-07	2.3E-05	2.5E+01
190	SWSRIEL001C	NCS-MHX-001C (C-CCW HX) TUBE EXTERNAL LEAK LARGE	7.2E-07	1.8E-05	2.5E+01
191	SWSXVEL507C	EWS-VLV-507C EXTERNAL LEAK LARGE	7.2E-08	1.8E-06	2.5E+01
192	SWSXVEL701C	EWS-VLV-701C EXTERNAL LEAK LARGE	7.2E-08	1.8E-06	2.5E+01
193	SWSXVEL506C	EWS-VLV-506C EXTERNAL LEAK LARGE	7.2E-08	1.8E-06	2.5E+01
194	SWSXVEL511C	EWS-VLV-511C EXTERNAL LEAK LARGE	7.2E-08	1.8E-06	2.5E+01

Table 19.1-72 Basic Events (Hardware Failure, Human Error) RAW for Flood (Sheet 16 of 61)

Rank	Basic Event ID	Basic Event Description	Basic Event Probability	FV Importance	RAW
195	SWSXVEL508C	EWS-VLV-508C EXTERNAL LEAK LARGE	7.2E-08	1.8E-06	2.5E+01
196	SWSXVEL514C	EWS-VLV-514C EXTERNAL LEAK LARGE	7.2E-08	1.8E-06	2.5E+01
197	SWSXVEL509C	EWS-VLV-509C EXTERNAL LEAK LARGE	7.2E-08	1.8E-06	2.5E+01
198	SWSCVEL502C	EWS-VLV-502C EXTERNAL LEAK LARGE	4.8E-08	1.2E-06	2.5E+01
199	SWSMVEL503C	EWS-MOV-503C EXTERNAL LEAK LARGE	2.4E-08	5.8E-07	2.5E+01
200	SWSPEELSWPC1	EWS C-ESW PUMP DISCHARGE LINE PIPING EXTERNAL LEAK LARGE	3.6E-09	8.8E-08	2.5E+01
201	SWSPEELSWSC3	EWS C-CCW HX COOLING LINE PIPING EXTERNAL LEAK LARGE	3.6E-09	8.8E-08	2.5E+01
202	SWSPMYR001C	EWS-MPP-001C (C-ESW PUMP) FAIL TO RUN	1.1E-04	2.7E-03	2.5E+01
203	SWSFMPR072	EWS-FT-072 (FLOW METER) PLUG	2.4E-05	5.8E-04	2.5E+01
204	SWSORPR002C	EWS-SRO-002C (ORIFICE) PLUG	2.4E-05	5.8E-04	2.5E+01
205	SWSXVPR601C	EWS-VLV-601C PLUG	2.4E-06	5.8E-05	2.5E+01
206	SWSCVPR602C	EWS-VLV-602C PLUG	2.4E-06	5.8E-05	2.5E+01
207	SWSPMEL001C	EWS-MPP-001C (C-ESW PUMP) EXTERNAL LEAK LARGE	1.9E-07	4.6E-06	2.5E+01

Table 19.1-72 Basic Events (Hardware Failure, Human Error) RAW for Flood (Sheet 17 of 61)

Rank	Basic Event ID	Basic Event Description	Basic Event Probability	FV Importance	RAW
208	SWSXVEL601C	EWS-VLV-601C EXTERNAL LEAK LARGE	7.2E-08	1.7E-06	2.5E+01
209	SWSCVEL602C	EWS-VLV-602C EXTERNAL LEAK LARGE	4.8E-08	1.2E-06	2.5E+01
210	SWSPEELSWSC2	EWS C-ESW PUMP COOLING LINE PIPING EXTERNAL LEAK LARGE	3.6E-09	8.6E-08	2.5E+01
211	CWSCF4PCYR-FF	NCS-MPP-001A,B,C,D (A,B,C,D-CCW PUMP) FAIL TO RUN (CCF)	6.7E-09	1.4E-07	2.2E+01
212	EFWXVEL013D	EFS-VLV-013D EXTERNAL LEAK LARGE	7.2E-08	1.3E-06	1.9E+01
213	EFWXVEL013C	EFS-VLV-013C EXTERNAL LEAK LARGE	7.2E-08	1.3E-06	1.9E+01
214	EFWCVEL012D	EFS-VLV-012D EXTERNAL LEAK LARGE	4.8E-08	8.8E-07	1.9E+01
215	EFWCVEL012C	EFS-VLV-012C EXTERNAL LEAK LARGE	4.8E-08	8.8E-07	1.9E+01
216	EFWCVEL018D	EFS-VLV-018D EXTERNAL LEAK LARGE	4.8E-08	8.8E-07	1.9E+01
217	EFWCVEL018C	EFS-VLV-018C EXTERNAL LEAK LARGE	4.8E-08	8.8E-07	1.9E+01
218	EFWMVEL014C	EFS-MOV-014C EXTERNAL LEAK LARGE	2.4E-08	4.4E-07	1.9E+01
219	EFWMVEL017D	EFS-MOV-017D EXTERNAL LEAK LARGE	2.4E-08	4.4E-07	1.9E+01
220	EFWMVEL019C	EFS-MOV-019C EXTERNAL LEAK LARGE	2.4E-08	4.4E-07	1.9E+01

Table 19.1-72 Basic Events (Hardware Failure, Human Error) RAW for Flood (Sheet 18 of 61)

Rank	Basic Event ID	Basic Event Description	Basic Event Probability	FV Importance	RAW
221	EFWMVEL019D	EFS-MOV-019D EXTERNAL LEAK LARGE	2.4E-08	4.4E-07	1.9E+01
222	EFWMVEL014D	EFS-MOV-014D EXTERNAL LEAK LARGE	2.4E-08	4.4E-07	1.9E+01
223	EFWMVEL017C	EFS-MOV-017C EXTERNAL LEAK LARGE	2.4E-08	4.4E-07	1.9E+01
224	EFWPNELEFWMB	EFS C-M/D EFW PUMP LINE PIPING EXTER-NAL LEAK LARGE	6.0E-10	1.1E-08	1.9E+01
225	EFWPNELEFWTB	EFS D-T/D EFW PUMP LINE PIPING EXTER-NAL LEAK LARGE	6.0E-10	1.1E-08	1.9E+01
226	EFWPNELSGD	EFS D-SG SUPPLY LINE PIPING EXTERNAL LEAK LARGE	6.0E-10	1.1E-08	1.9E+01
227	EFWPNELSGC	EFS C-SG SUPPLY LINE PIPING EXTERNAL LEAK LARGE	6.0E-10	1.1E-08	1.9E+01
228	EPSBSFFDCCC	C-CLASS 1E DC SWITCHBOARD	5.8E-06	1.0E-04	1.8E+01
229	EPSTRFF001C	C-CLASS 1E 6.9KV-480V CLASS 1E STATION SERVICE TRANSFORMER FAIL TO OPER-	8.2E-06	1.4E-04	1.8E+01
230	EPSBSFFLCC	C-CLASS 1E 480V LOAD CENTER FAILURE	5.8E-06	1.0E-04	1.8E+01
231	EPSCBSO52STLC	EPS 52/STLC (BREAKER) SPURIOUS OPEN	3.0E-06	5.3E-05	1.8E+01
232	EPSCBSO52STHC	EPS 52/STHC (BREAKER) SPURIOUS OPEN	3.0E-06	5.3E-05	1.8E+01
233	SWSCF2PMYR001AC-ALL	EWS-MPP-001A,C (ESW PUMP) FAIL TO RUN (CCF)	8.9E-06	1.5E-04	1.7E+01

Table 19.1-72 Basic Events (Hardware Failure, Human Error) RAW for Flood (Sheet 19 of 61)

Rank	Basic Event ID	Basic Event Description	Basic Event Probability	FV Importance	RAW
234	CHIOO01CHIB	(HE) FAIL TO START THE STANDBY CHARG-ING INJECTION PUMP B	2.6E-03	4.1E-02	1.7E+01
235	CHIPMBD001B-R	CVS-MPP-001B (B-CHI PUMP) FAIL TO RE-START	1.8E-03	2.8E-02	1.7E+01
236	CHICF2PMBD001-ALL	CVS-MPP-001A,B (CHI PUMP) FAIL TO START (CCF)	2.0E-04	3.2E-03	1.7E+01
237	EPSBSFFMCCC	C-CLASS 1E 480V MCC FAILURE	5.8E-06	8.8E-05	1.6E+01
238	EPSCBSO52LCC	EPS 52/LCC (BREAKER) SPURIOUS OPEN	3.0E-06	4.6E-05	1.6E+01
239	PZRSVCD122	RCS-SRV-122 FAIL TO RE-CLOSE	7.0E-05	1.1E-03	1.6E+01
240	PZRSVCD121	RCS-SRV-121 FAIL TO RE-CLOSE	7.0E-05	1.1E-03	1.6E+01
241	PZRSVCD120	RCS-SRV-120 FAIL TO RE-CLOSE	7.0E-05	1.1E-03	1.6E+01
242	PZRSVCD123	RCS-SRV-123 FAIL TO RE-CLOSE	7.0E-05	1.1E-03	1.6E+01
243	EPSBSFFMCC	C-CLASS 1E 6.9KV SWITCHGEAR FAILURE	5.8E-06	8.0E-05	1.5E+01
244	EFWCF4CVOD012-234	EFS-VLV-012A,C,D FAIL TO OPEN (CCF)	6.2E-08	8.2E-07	1.4E+01
245	SWSSTPRST003C	EWS-SST-003C (STRAINER) PLUG	1.7E-04	2.1E-03	1.4E+01
246	CWSPCYR001C	NCS-MPP-001C (C-CCW PUMP) FAIL TO RUN	6.2E-05	7.8E-04	1.4E+01

Table 19.1-72 Basic Events (Hardware Failure, Human Error) RAW for Flood (Sheet 20 of 61)

Rank	Basic Event ID	Basic Event Description	Basic Event Probability	FV Importance	RAW
247	CWSORPR042	NCS-FE-042 (ORIFICE) PLUG	2.4E-05	3.0E-04	1.4E+01
248	CWSORPR037	NCS-FE-037 (ORIFICE) PLUG	2.4E-05	3.0E-04	1.4E+01
249	SWSORPR036	EWS-FE-036 (ORIFICE) PLUG	2.4E-05	3.0E-04	1.4E+01
250	SWSORPR001C	EWS-SRO-001C (ORIFICE) PLUG	2.4E-05	3.0E-04	1.4E+01
251	SWSXVPR517C	EWS-VLV-517C PLUG	2.4E-06	3.0E-05	1.4E+01
252	SWSXVPR514C	EWS-VLV-514C PLUG	2.4E-06	3.0E-05	1.4E+01
253	SWSXVPR520C	EWS-VLV-520C PLUG	2.4E-06	3.0E-05	1.4E+01
254	SWSXVPR511C	EWS-VLV-511C PLUG	2.4E-06	3.0E-05	1.4E+01
255	CWSXVPR018C	NCS-VLV-018C PLUG	2.4E-06	3.0E-05	1.4E+01
256	CWSXVPR101C	NCS-VLV-101C PLUG	2.4E-06	3.0E-05	1.4E+01
257	CWSXVPR104C	NCS-VLV-104C PLUG	2.4E-06	3.0E-05	1.4E+01
258	CWSCVPR016C	NCS-VLV-016C PLUG	2.4E-06	3.0E-05	1.4E+01
259	CWSXVPR005C	NCS-VLV-005C PLUG	2.4E-06	3.0E-05	1.4E+01

Table 19.1-72 Basic Events (Hardware Failure, Human Error) RAW for Flood (Sheet 21 of 61)

Rank	Basic Event ID	Basic Event Description	Basic Event Probability	FV Importance	RAW
260	CWSXVPR008C	NCS-VLV-008C PLUG	2.4E-06	3.0E-05	1.4E+01
261	CWSRHPF001C	NCS-MHX-001C (C-CCW HX) PLUG / FOUL	1.4E-06	1.7E-05	1.4E+01
262	CWSRIEL001C	NCS-MHX-001C (C-CCW HX) TUBE EXTERNAL LEAK LARGE	7.2E-07	9.0E-06	1.4E+01
263	CWSPMEL001C	NCS-MPP-001C (C-CCW PUMP) EXTERNAL LEAK LARGE	1.9E-07	2.4E-06	1.4E+01
264	HPIXVEL116C	NCS-VLV-116C EXTERNAL LEAK LARGE	7.2E-08	9.0E-07	1.4E+01
265	HPIXVEL119C	NCS-VLV-119C EXTERNAL LEAK LARGE	7.2E-08	9.0E-07	1.4E+01
266	HPIXVEL111C	NCS-VLV-111C EXTERNAL LEAK LARGE	7.2E-08	9.0E-07	1.4E+01
267	HPIXVEL115C	NCS-VLV-115C EXTERNAL LEAK LARGE	7.2E-08	9.0E-07	1.4E+01
268	HPIXVEL114C	NCS-VLV-114C EXTERNAL LEAK LARGE	7.2E-08	9.0E-07	1.4E+01
269	CWSXVEL018C	NCS-VLV-018C EXTERNAL LEAK LARGE	7.2E-08	9.0E-07	1.4E+01
270	CWSXVEL008C	NCS-VLV-008C EXTERNAL LEAK LARGE	7.2E-08	9.0E-07	1.4E+01
271	CWSXVEL104C	NCS-VLV-104C EXTERNAL LEAK LARGE	7.2E-08	9.0E-07	1.4E+01
272	CWSXVEL101C	NCS-VLV-101C EXTERNAL LEAK LARGE	7.2E-08	9.0E-07	1.4E+01

Table 19.1-72 Basic Events (Hardware Failure, Human Error) RAW for Flood (Sheet 22 of 61)

Rank	Basic Event ID	Basic Event Description	Basic Event Probability	FV Importance	RAW
273	CWSCVEL016C	NCS-VLV-016C EXTERNAL LEAK LARGE	4.8E-08	6.0E-07	1.4E+01
274	CWSPNELCWC	NCS CWS TRAIN C PIPING EXTERNAL LEAK LARGE	6.0E-10	7.5E-09	1.4E+01
275	RWSSUPR001C	SIS-SST-001C (C-ESS/CS STRAINER) PLUG DURING OPERATION	2.1E-04	2.6E-03	1.3E+01
276	EPSBSFFDCCD1	D1-CLASS 1E DC SWITCHBOARD	5.8E-06	6.9E-05	1.3E+01
277	EPSCBSO72DDDD	EPS 72/DDDD (BREAKER) SPURIOUS OPEN	3.0E-06	3.6E-05	1.3E+01
278	EPSCBSO72DDAD	EPS 72/DDAD (BREAKER) SPURIOUS OPEN	3.0E-06	3.6E-05	1.3E+01
279	EPSCF4CBSO72DD1-14	EPS 72/DDBC,AD (BREAKER) SPURIOUS OPEN (CCF)	3.4E-08	4.0E-07	1.3E+01
280	EPSCF4CBSO72DD1-13	EPS 72/DDBB,AD (BREAKER) SPURIOUS OPEN (CCF)	3.4E-08	4.0E-07	1.3E+01
281	EPSCF4CBSO72DD2-34	EPS 72/DDBD,DD (BREAKER) SPURIOUS OPEN (CCF)	3.4E-08	4.0E-07	1.3E+01
282	EPSCF4CBSO72DD2-24	EPS 72/DDBA,DD (BREAKER) SPURIOUS OPEN (CCF)	3.4E-08	4.0E-07	1.3E+01
283	EPSCF4CBSO72DD2-234	EPS 72/DDBA,BD,DD (BREAKER) SPURIOUS OPEN (CCF)	2.9E-08	3.5E-07	1.3E+01
284	EPSCF4CBSO72DD1-134	EPS 72/DDBB,BC,AD (BREAKER) SPURIOUS OPEN (CCF)	2.9E-08	3.5E-07	1.3E+01
285	HPIPMAD001C	SIS-MPP-001C (C-SI PUMP) FAIL TO START	1.3E-03	1.5E-02	1.3E+01

Table 19.1-72 Basic Events (Hardware Failure, Human Error) RAW for Flood (Sheet 23 of 61)

Rank	Basic Event ID	Basic Event Description	Basic Event Probability	FV Importance	RAW
286	HPIPMSR001C	SIS-MPP-001C (C-SI PUMP) FAIL TO RUN DURING FIRST HOUR OF OPERATION	3.7E-04	4.2E-03	1.2E+01
287	RSSRIEL001A	RHS-MHX-001A (A-CS/RHR HX) TUBE EXTERNAL LEAK LARGE	7.2E-07	8.1E-06	1.2E+01
288	RSSXVEL013A	RHS-VLV-013A EXTERNAL LEAK LARGE	7.2E-08	8.1E-07	1.2E+01
289	RSSCVEL004A	RHS-VLV-004A EXTERNAL LEAK LARGE	4.8E-08	5.4E-07	1.2E+01
290	HPITMPI001C	SIS-MPP-001C (C-SI PUMP) TEST & MAINTE-NANCE	4.0E-03	4.4E-02	1.2E+01
291	HPIPMLR001C	SIS-MPP-001C (C-SI PUMP) FAIL TO RUN AFTER FIRST HOUR OF OPERATION	1.3E-04	1.4E-03	1.2E+01
292	EFWCF4MVFC017-23	EFS-MOV-017A,B FAIL TO CONTROL (CCF)	5.6E-07	6.0E-06	1.2E+01
293	HPIORPR003C	SIS-SRO-003C (ORIFICE) PLUG	2.4E-05	2.6E-04	1.2E+01
294	HPIORPR086	NCS-FE-086 (ORIFICE) PLUG	2.4E-05	2.6E-04	1.2E+01
295	HPIORPR074	SIS-FE-074 (ORIFICE) PLUG	2.4E-05	2.6E-04	1.2E+01
296	HPIORPR082	NCS-FE-082 (ORIFICE) PLUG	2.4E-05	2.6E-04	1.2E+01
297	HPIXVPR116C	NCS-VLV-116C PLUG	2.4E-06	2.6E-05	1.2E+01
298	HPIXVPR111C	NCS-VLV-111C PLUG	2.4E-06	2.6E-05	1.2E+01

Table 19.1-72 Basic Events (Hardware Failure, Human Error) RAW for Flood (Sheet 24 of 61)

Rank	Basic Event ID	Basic Event Description	Basic Event Probability	FV Importance	RAW
299	HPIXVPR114C	NCS-VLV-114C PLUG	2.4E-06	2.6E-05	1.2E+01
300	HPIXVPR115C	NCS-VLV-115C PLUG	2.4E-06	2.6E-05	1.2E+01
301	HPIXVPR119C	NCS-VLV-119C PLUG	2.4E-06	2.6E-05	1.2E+01
302	HPIXVPR023C	SIS-VLV-023C PLUG	2.4E-06	2.6E-05	1.2E+01
303	HPIMVOM014C	SIS-MOV-014C SPURIOUS OPEN	9.6E-07	1.0E-05	1.2E+01
304	HPIXVEL023C	SIS-VLV-023C EXTERNAL LEAK LARGE	7.2E-08	7.7E-07	1.2E+01
305	HPIMVIL014C	SIS-MOV-014C INTERNAL LEAK LARGE	7.2E-08	7.7E-07	1.2E+01
306	HPIMVIL024C	SIS-MOV-024C INTERNAL LEAK LARGE	7.2E-08	7.7E-07	1.2E+01
307	HPIMVEL024C	SIS-MOV-024C EXTERNAL LEAK LARGE	2.4E-08	2.6E-07	1.2E+01
308	HPIMVEL014C	SIS-MOV-014C EXTERNAL LEAK LARGE	2.4E-08	2.6E-07	1.2E+01
309	HPIPNELTESTOC	SIS TEST LINE C (BYPASS LINE) PIPING EXTERNAL LEAK LARGE	6.0E-10	6.4E-09	1.2E+01
310	HPIPNELTESTCC	SIS TEST LINE C (FULL FLOW LINE) PIPING EXTERNAL LEAK LARGE	6.0E-10	6.4E-09	1.2E+01
311	EFWCF4CVOD018-14	EFS-VLV-018A,B FAIL TO OPEN (CCF)	2.3E-07	2.4E-06	1.1E+01

Table 19.1-72 Basic Events (Hardware Failure, Human Error) RAW for Flood (Sheet 25 of 61)

Rank	Basic Event ID	Basic Event Description	Basic Event Probability	FV Importance	RAW
312	HPIORPR064	SIS-FE-064 (ORIFICE) PLUG	2.4E-05	2.5E-04	1.1E+01
313	HPIORPR001C	SIS-SRO-001C (ORIFICE) PLUG	2.4E-05	2.5E-04	1.1E+01
314	HPICVOD013C	SIS-VLV-013C FAIL TO OPEN	9.7E-06	1.0E-04	1.1E+01
315	HPICVOD004C	SIS-VLV-004C FAIL TO OPEN	9.7E-06	1.0E-04	1.1E+01
316	HPICVOD010C	SIS-VLV-010C FAIL TO OPEN	9.7E-06	1.0E-04	1.1E+01
317	HPICVOD012C	SIS-VLV-012C FAIL TO OPEN	9.7E-06	1.0E-04	1.1E+01
318	HPICVPR012C	SIS-VLV-012C PLUG	2.4E-06	2.5E-05	1.1E+01
319	HPICVPR013C	SIS-VLV-013C PLUG	2.4E-06	2.5E-05	1.1E+01
320	HPICVPR004C	SIS-VLV-004C PLUG	2.4E-06	2.5E-05	1.1E+01
321	HPICVPR010C	SIS-VLV-010C PLUG	2.4E-06	2.5E-05	1.1E+01
322	HPIMVPR009C	SIS-MOV-009C PLUG	2.4E-06	2.5E-05	1.1E+01
323	HPIMVPR011C	SIS-MOV-011C PLUG	2.4E-06	2.5E-05	1.1E+01
324	HPIMVCM011C	SIS-MOV-011C SPURIOUS CLOSE	9.6E-07	1.0E-05	1.1E+01

Table 19.1-72 Basic Events (Hardware Failure, Human Error) RAW for Flood (Sheet 26 of 61)

Rank	Basic Event ID	Basic Event Description	Basic Event Probability	FV Importance	RAW
325	HPIMVCM009C	SIS-MOV-009C SPURIOUS CLOSE	9.6E-07	1.0E-05	1.1E+01
326	HPICVEL013C	SIS-VLV-013C EXTERNAL LEAK LARGE	4.8E-08	5.0E-07	1.1E+01
327	HPICVEL010C	SIS-VLV-010C EXTERNAL LEAK LARGE	4.8E-08	5.0E-07	1.1E+01
328	HPICVEL012C	SIS-VLV-012C EXTERNAL LEAK LARGE	4.8E-08	5.0E-07	1.1E+01
329	HPIMVEL011C	SIS-MOV-011C EXTERNAL LEAK LARGE	2.4E-08	2.5E-07	1.1E+01
330	HPIPNELINJLC	SIS C-SI PUMP DISCHARGE LINE (INSIDE C/V) PIPING EXTERNAL LEAK LARGE	6.0E-10	6.3E-09	1.1E+01
331	HPICF4PMAD001-24	SIS-MPP-001A,C (SI PUMP) FAIL TO START (CCF)	2.2E-05	2.0E-04	1.0E+01
332	HPICF4PMAD001-12	SIS-MPP-001B,C (SI PUMP) FAIL TO START (CCF)	2.2E-05	2.0E-04	1.0E+01
333	EFWCF4CVOD012-123	EFS-VLV-012A,B,C FAIL TO OPEN (CCF)	6.2E-08	5.6E-07	9.9E+00
334	EPSTRFF001D	D-CLASS 1E 6.9KV-480V CLASS 1E STATION SERVICE TRANSFORMER FAIL TO OPERATE	8.2E-06	6.8E-05	9.3E+00
335	EPSBSFFLCD	D-CLASS 1E 480V LOAD CENTER FAILURE	5.8E-06	4.8E-05	9.3E+00
336	EPSCBSO52STHD	EPS 52/STHD (BREAKER) SPURIOUS OPEN	3.0E-06	2.5E-05	9.3E+00

Table 19.1-72 Basic Events (Hardware Failure, Human Error) RAW for Flood (Sheet 27 of 61)

Rank	Basic Event ID	Basic Event Description	Basic Event Probability	FV Importance	RAW
337	EPSCBSO52STLD	EPS 52/STLD (BREAKER) SPURIOUS OPEN	3.0E-06	2.5E-05	9.3E+00
338	HPICF4PMAD001-124	SIS-MPP-001A,B,C(SI PUMP) FAIL TO START (CCF)	9.5E-06	7.5E-05	8.9E+00
339	HPIOO02FWBD	(HE) FAIL TO OPEN SAFETY DEPRESSURIZATION VALVE AND START SAFETY INJECTION PUMP	3.8E-03	2.9E-02	8.7E+00
340	CWSCF2PCYR001AC-ALL	NCS-MPP-001A,C (CCW PUMP) FAIL TO RUN (CCF)	5.0E-06	3.7E-05	8.5E+00
341	CWSCF2RHP001AC-ALL	NCS-MHX-001A,C (CCW HX) PLUG / FOUL (CCF)	6.8E-08	5.1E-07	8.5E+00
342	PZRMVOD117B	RCS-MOV-117B FAIL TO OPEN	8.7E-04	6.1E-03	8.0E+00
343	EPSBSFFMCCD1	D1-CLASS 1E 480V MCC FAILURE	5.8E-06	4.0E-05	8.0E+00
344	EPSBSFFLCD1	D1-CLASS 1E 480V LOAD CENTER FAILURE	5.8E-06	4.0E-05	8.0E+00
345	EPSCBSO52LLDD	EPS 52/LLDD (BREAKER) SPURIOUS OPEN	3.1E-06	2.2E-05	8.0E+00
346	EPSCBSO52LLAD	EPS 52/LLAD (BREAKER) SPURIOUS OPEN	3.1E-06	2.2E-05	8.0E+00
347	EPSCBSO52LCD1	EPS 52/LCD1 (BREAKER) SPURIOUS OPEN	3.1E-06	2.2E-05	8.0E+00
348	PZRMVPR117B	RCS-MOV-117B PLUG	2.4E-06	1.7E-05	8.0E+00

Table 19.1-72 Basic Events (Hardware Failure, Human Error) RAW for Flood (Sheet 28 of 61)

Rank	Basic Event ID	Basic Event Description	Basic Event Probability	FV Importance	RAW
349	PZRMVPR116B	RCS-MOV-116B PLUG	2.4E-06	1.7E-05	8.0E+00
350	PZRMVCM117B	RCS-MOV-117B SPURIOUS CLOSE	9.6E-07	6.7E-06	8.0E+00
351	PZRMVCM116B	RCS-MOV-116B SPURIOUS CLOSE	9.6E-07	6.7E-06	8.0E+00
352	RWSCF4SUPR001-124	SIS-SST-001A,B,C (ESS/CS STRAINER) PLUG DURING OPERATION (CCF)	3.7E-06	2.5E-05	7.9E+00
353	OPSLOOP	CONSEQUENTIAL LOOP GIVEN A REACTOR TRIP	5.3E-03	3.5E-02	7.5E+00
354	RWSCF4SUPR001-24	SIS-SST-001A,C (ESS/CS STRAINER) PLUG DURING OPERATION (CCF)	3.0E-06	1.9E-05	7.3E+00
355	RWSCF4SUPR001-12	SIS-SST-001B,C (ESS/CS STRAINER) PLUG DURING OPERATION (CCF)	3.0E-06	1.9E-05	7.3E+00
356	RSSRIEL001C	RHS-MHX-001C (C-CS/RHR HX) TUBE EXTERNAL LEAK LARGE	7.2E-07	4.4E-06	7.1E+00
357	RSSXVEL013C	RHS-VLV-013C EXTERNAL LEAK LARGE	7.2E-08	4.4E-07	7.1E+00
358	RSSCVEL004C	RHS-VLV-004C EXTERNAL LEAK LARGE	4.8E-08	2.9E-07	7.1E+00
359	HPICF4PMSR001-12	SIS-MPP-001B,C (SI PUMP) FAIL TO RUN DURING FIRST HOUR OF OPERATION (CCF)	3.6E-06	2.2E-05	7.0E+00
360	HPICF4PMSR001-24	SIS-MPP-001A,C (SI PUMP) FAIL TO RUN DURING FIRST HOUR OF OPERATION (CCF)	3.6E-06	2.2E-05	7.0E+00
361	RSSPMEL001A	RHS-MPP-001A (A-CS/RHR PUMP) EXTER-NAL LEAK LARGE	1.9E-07	1.2E-06	7.0E+00

Table 19.1-72 Basic Events (Hardware Failure, Human Error) RAW for Flood (Sheet 29 of 61)

Rank	Basic Event ID	Basic Event Description	Basic Event Probability	FV Importance	RAW
362	HPIPMEL001A	SIS-MPP-001A (A-SI PUMP) EXTERNAL LEAK LARGE	1.9E-07	1.2E-06	7.0E+00
363	EFWCF4CVOD012-134	EFS-VLV-012A,B,D FAIL TO OPEN (CCF)	6.2E-08	3.7E-07	7.0E+00
364	HPIMVPR001C	SIS-MOV-001C PLUG	2.4E-06	1.4E-05	6.9E+00
365	HPIMVCM001C	SIS-MOV-001C SPURIOUS CLOSE	9.6E-07	5.6E-06	6.9E+00
366	HPICF4PMSR001-124	SIS-MPP-001A,B,C (SI PUMP) FAIL TO RUN DURING FIRST HOUR OF OPERATION (CCF)	3.3E-06	1.9E-05	6.8E+00
367	RSSXVEL002A	CSS-VLV-002A EXTERNAL LEAK LARGE	7.2E-08	4.2E-07	6.8E+00
368	RSSXVEL031A	RHS-VLV-031A EXTERNAL LEAK LARGE	7.2E-08	4.2E-07	6.8E+00
369	RSSXVEL034A	RHS-VLV-034A EXTERNAL LEAK LARGE	7.2E-08	4.2E-07	6.8E+00
370	RSSMVEL004A	CSS-MOV-004A EXTERNAL LEAK LARGE	2.4E-08	1.4E-07	6.8E+00
371	RSSMVEL021A	RHS-MOV-021A EXTERNAL LEAK LARGE	2.4E-08	1.4E-07	6.8E+00
372	EFWCVEL005	EFS-VLV-005 EXTERNAL LEAK LARGE	4.8E-08	2.7E-07	6.7E+00
373	EFWPNELPITAB	EFS A,B-EFW PIT TIE LINE PIPING EXTER-NAL LEAK LARGE	6.0E-10	3.4E-09	6.7E+00
374	RSSPMAD001C	RHS-MPP-001C (C-CS/RHR PUMP) FAIL TO START	1.4E-03	8.1E-03	6.7E+00

Table 19.1-72 Basic Events (Hardware Failure, Human Error) RAW for Flood (Sheet 30 of 61)

Rank	Basic Event ID	Basic Event Description	Basic Event Probability	FV Importance	RAW
375	RSSMVOD004C	CSS-MOV-004C FAIL TO OPEN	9.0E-04	5.0E-03	6.6E+00
376	RSSCVOD005C	CSS-VLV-005C FAIL TO OPEN	1.0E-05	5.8E-05	6.6E+00
377	RSSXVPR002C	CSS-VLV-002C PLUG	2.4E-06	1.4E-05	6.6E+00
378	RSSCVPR005C	CSS-VLV-005C PLUG	2.4E-06	1.4E-05	6.6E+00
379	RSSMVPR004C	CSS-MOV-004C PLUG	2.4E-06	1.4E-05	6.6E+00
380	RSSMVCM004C	CSS-MOV-004C SPURIOUS CLOSE	9.6E-07	5.4E-06	6.6E+00
381	RSSMVOD145C	NCS-MOV-145C FAIL TO OPEN	9.0E-04	5.0E-03	6.6E+00
382	RSSMVPR145C	NCS-MOV-145C PLUG	2.4E-06	1.4E-05	6.6E+00
383	RSSMVCM145C	NCS-MOV-145C SPURIOUS CLOSE	9.6E-07	5.4E-06	6.6E+00
384	EPSCF4CBSO72DD2-ALL	EPS 72/DDDA,BA,BD,DD (BREAKER) SPURIOUS OPEN (CCF)	1.6E-07	8.9E-07	6.6E+00
385	EPSCF4CBSO72DD1-ALL	EPS 72/DDAA,BB,BC,AD (BREAKER) SPURIOUS OPEN (CCF)	1.6E-07	8.9E-07	6.6E+00
386	EPSCF4CBSO72DD2-14	EPS 72/DDDA,DD (BREAKER) SPURIOUS OPEN (CCF)	3.4E-08	1.9E-07	6.6E+00
387	EPSCF4CBSO72DD1-12	EPS 72/DDAA,AD (BREAKER) SPURIOUS OPEN (CCF)	3.4E-08	1.9E-07	6.6E+00

Table 19.1-72 Basic Events (Hardware Failure, Human Error) RAW for Flood (Sheet 31 of 61)

Rank	Basic Event ID	Basic Event Description	Basic Event Probability	FV Importance	RAW
388	EPSCF4CBSO72DD2-134	EPS 72/DDDA,BD,DD (BREAKER) SPURI-OUS OPEN (CCF)	2.9E-08	1.6E-07	6.6E+00
389	EPSCF4CBSO72DD1-124	EPS 72/DDAA,BC,AD (BREAKER) SPURIOUS OPEN (CCF)	2.9E-08	1.6E-07	6.6E+00
390	EPSCF4CBSO72DD1-123	EPS 72/DDAA,BB,AD (BREAKER) SPURIOUS OPEN (CCF)	2.9E-08	1.6E-07	6.6E+00
391	EPSCF4CBSO72DD2-124	EPS 72/DDDA,BA,DD (BREAKER) SPURIOUS OPEN (CCF)	2.9E-08	1.6E-07	6.6E+00
392	RSSPMSR001C	RHS-MPP-001C (C-CS/RHR PUMP) FAIL TO RUN DURING FIRST HOUR OF OPERATION	3.8E-04	2.1E-03	6.5E+00
393	RSSPMLR001C	RHS-MPP-001C (C-CS/RHR PUMP) FAIL TO RUN AFTER FIRST HOUR OF OPERATION	1.3E-04	7.2E-04	6.5E+00
394	RSSTMRP001C	RHS-MHX-001C (C-CS/RHR HX) TEST & MAINTENANCE	5.0E-03	2.6E-02	6.1E+00
395	RSSTMPI001C	RHS-MPP-001C (C-CS/RHR PUMP) TEST & MAINTENANCE	4.0E-03	2.1E-02	6.1E+00
396	RTPCNVTRPS2OCD	RPS-C GROUP-2 E/O CONVERTER (OUTPUT TO RPS-D) FAILURE	5.6E-04	2.8E-03	6.1E+00
397	RTPCNVTRPS2IDC	RPS-D GROUP-2 E/O CONVERTER (INPUT FROM RPS-C) FAILURE	5.6E-04	2.8E-03	6.1E+00
398	RTPCNVTRPS2ODC	RPS-D GROUP-2 E/O CONVERTER (OUTPUT TO RPS-C) FAILURE	5.6E-04	2.8E-03	6.1E+00
399	RTPCNVTRPS2ICD	RPS-C GROUP-2 E/O CONVERTER (INPUT FROM RPS-D) FAILURE	5.6E-04	2.8E-03	6.1E+00
400	RTPNWIFRT5001D2	RPS-D GROUP-2 NETWORK I/F CARD FOR UNIT BUS RT5001D2 FAILURE	5.2E-03	2.7E-02	6.1E+00

Table 19.1-72 Basic Events (Hardware Failure, Human Error) RAW for Flood (Sheet 32 of 61)

Rank	Basic Event ID	Basic Event Description	Basic Event Probability	FV Importance	RAW
401	RTPNWIFRT5002D2	RPS-D GROUP-2 NETWORK I/F CARD FOR SAFETY BUS RT5002D2 FAILURE	5.2E-03	2.7E-02	6.1E+00
402	RTPNWIFRT5002C2	RPS-C GROUP-2 NETWORK I/F CARD FOR SAFETY BUS RT5002C2 FAILURE	5.2E-03	2.7E-02	6.1E+00
403	RTPNWIFRT5001C2	RPS-C GROUP-2 NETWORK I/F CARD FOR UNIT BUS RT5001C2 FAILURE	5.2E-03	2.7E-02	6.1E+00
404	RTPCPUCRT5001C2	RPS-C GROUP-2 CPU CARD RT5001C2 FAIL-URE	4.4E-03	2.3E-02	6.1E+00
405	RTPCPUCRT5001D2	RPS-D GROUP-2 CPU CARD RT5001D2 FAIL-URE	4.4E-03	2.3E-02	6.1E+00
406	RTPBSIFRT5001C2	RPS-C GROUP-2 BUS MASTER CARD FOR RPS COMMUNICATION 5001C2 FAILURE	3.0E-03	1.5E-02	6.1E+00
407	RTPBSIFRT5003C2	RPS-C GROUP-2 BUS MASTER CARD FOR I/O 5003C2 FAILURE	3.0E-03	1.5E-02	6.1E+00
408	RTPBSIFRT5002C2	RPS-C GROUP-2 BUS MASTER CARD FOR ESFAS OUTPUT 5002C2 FAILURE	3.0E-03	1.5E-02	6.1E+00
409	RTPBSIFRT5001D2	RPS-D GROUP-2 BUS MASTER CARD FOR RPS COMMUNICATION 5001D2 FAILURE	3.0E-03	1.5E-02	6.1E+00
410	RTPBSIFRT5002D2	RPS-D GROUP-2 BUS MASTER CARD FOR ESFAS OUTPUT 5002D2 FAILURE	3.0E-03	1.5E-02	6.1E+00
411	RTPBSIFRT5003D2	RPS-D GROUP-2 BUS MASTER CARD FOR I/O 5003D2 FAILURE	3.0E-03	1.5E-02	6.1E+00
412	RTPSMCART5001D2	RPS-D GROUP-2 SYSTEM MANAGEMENT CARD RT5001D2 FAILURE	2.5E-03	1.3E-02	6.1E+00
413	RTPSMCART5001C2	RPS-C GROUP-2 SYSTEM MANAGEMENT CARD RT5001C2 FAILURE	2.5E-03	1.3E-02	6.1E+00

Table 19.1-72 Basic Events (Hardware Failure, Human Error) RAW for Flood (Sheet 33 of 61)

Rank	Basic Event ID	Basic Event Description	Basic Event Probability	FV Importance	RAW
414	RTPRPCART6001D	RPS-D GROUP-2 REPEATER CARD FOR INPUT RT6001D FAILURE	4.1E-04	2.1E-03	6.0E+00
415	RTPRPCART6001C	RPS-C GROUP-2 REPEATER CARD FOR INPUT RT6001C FAILURE	4.1E-04	2.1E-03	6.0E+00
416	RSSRIEL001B	RHS-MHX-001B (B-CS/RHR HX) TUBE EXTERNAL LEAK LARGE	7.2E-07	3.5E-06	5.9E+00
417	RSSXVEL013B	RHS-VLV-013B EXTERNAL LEAK LARGE	7.2E-08	3.5E-07	5.9E+00
418	CFACVEL012	CSS-VLV-012 EXTERNAL LEAK LARGE	4.8E-08	2.4E-07	5.9E+00
419	RSSCVEL004B	RHS-VLV-004B EXTERNAL LEAK LARGE	4.8E-08	2.4E-07	5.9E+00
420	RSSRIEL001D	RHS-MHX-001D (D-CS/RHR HX) TUBE EXTERNAL LEAK LARGE	7.2E-07	3.5E-06	5.9E+00
421	RSSXVEL013D	RHS-VLV-013D EXTERNAL LEAK LARGE	7.2E-08	3.5E-07	5.9E+00
422	RSSCVEL004D	RHS-VLV-004D EXTERNAL LEAK LARGE	4.8E-08	2.3E-07	5.9E+00
423	RSSORPR034	RHS-FE-034 (ORIFICE) PLUG	2.4E-05	1.1E-04	5.8E+00
424	RSSORPR031	RHS-FE-031 (ORIFICE) PLUG	2.4E-05	1.1E-04	5.8E+00
425	RSSORPR001C	RHS-SRO-001C (ORIFICE) PLUG	2.4E-05	1.1E-04	5.8E+00
426	RSSCVOD004C	RHS-VLV-004C FAIL TO OPEN	1.0E-05	4.9E-05	5.8E+00

Table 19.1-72 Basic Events (Hardware Failure, Human Error) RAW for Flood (Sheet 34 of 61)

Rank	Basic Event ID	Basic Event Description	Basic Event Probability	FV Importance	RAW
427	RSSRHPR001C	RHS-MHX-001C (C-CS/RHR HX) PLUG / FOUL	8.9E-06	4.3E-05	5.8E+00
428	RSSXVPR013C	RHS-VLV-013C PLUG	2.4E-06	1.1E-05	5.8E+00
429	RSSCVPR004C	RHS-VLV-004C PLUG	2.4E-06	1.1E-05	5.8E+00
430	NCCOO04014	(HE) NCC MISCALIBRATION OF CSS-PT-014	8.0E-04	3.8E-03	5.7E+00
431	NCCIPFF014	CSS-PT-014 FAIL TO OPERATE	2.7E-05	1.3E-04	5.7E+00
432	RSSORPR062	NCS-FE-062 (ORIFICE) PLUG	2.4E-05	1.1E-04	5.7E+00
433	RSSORPR058	NCS-FE-058 (ORIFICE) PLUG	2.4E-05	1.1E-04	5.7E+00
434	RSSXVPR125C	NCS-VLV-125C PLUG	2.4E-06	1.1E-05	5.7E+00
435	RSSXVPR131C	NCS-VLV-131C PLUG	2.4E-06	1.1E-05	5.7E+00
436	RSSXVPR128C	NCS-VLV-128C PLUG	2.4E-06	1.1E-05	5.7E+00
437	SGNBTSWCCF3	NON-SAFETY (PCMS) APPLICATION SOFT-WARE CCF	1.0E-04	4.6E-04	5.6E+00
438	CWSCF4MVCD007-ALL	NCS-MOV-007A,B,C,D FAIL TO CLOSE (CCF)	1.3E-05	5.7E-05	5.6E+00
439	CWSCF4MVCD020-ALL	NCS-MOV-020A,B,C,D FAIL TO CLOSE (CCF)	1.3E-05	5.7E-05	5.6E+00

Table 19.1-72 Basic Events (Hardware Failure, Human Error) RAW for Flood (Sheet 35 of 61)

Rank	Basic Event ID	Basic Event Description	Basic Event Probability	FV Importance	RAW
440	RSSORPR054	NCS-FE-054 (ORIFICE) PLUG	2.4E-05	1.0E-04	5.3E+00
441	RSSXVPR144C	NCS-VLV-144C PLUG	2.4E-06	1.0E-05	5.3E+00
442	RSSXVPR141C	NCS-VLV-141C PLUG	2.4E-06	1.0E-05	5.3E+00
443	CWSCF4MVCD020-23	NCS-MOV-020C,D FAIL TO CLOSE (CCF)	8.3E-06	3.5E-05	5.2E+00
444	CWSCF4MVCD007-23	NCS-MOV-007C,D FAIL TO CLOSE (CCF)	8.3E-06	3.5E-05	5.2E+00
445	RSSCF4PMAD001-14	RHS-MPP-001B,C (CS/RHR PUMP) FAIL TO START (CCF)	1.3E-05	4.8E-05	4.9E+00
446	RSSCF4PMAD001-13	RHS-MPP-001A,C (CS/RHR PUMP) FAIL TO START (CCF)	1.3E-05	4.8E-05	4.9E+00
447	EPSCBFO52UAT-D	EPS 52/UATD (BREAKER) FAIL TO OPEN	3.5E-04	1.3E-03	4.6E+00
448	EPSCBFO52RAT-D	EPS 52/RATD (BREAKER) FAIL TO OPEN	3.5E-04	1.3E-03	4.6E+00
449	EPSCBSC52RATD	EPS 52/RATD (BREAKER) SPURIOUS CLOSE	3.0E-06	1.1E-05	4.6E+00
450	EPSCBSC52UATD	EPS 52/UATD (BREAKER) SPURIOUS CLOSE	3.0E-06	1.1E-05	4.6E+00
451	HPICF4PMLR001-24	SIS-MPP-001A,C (SI PUMP) FAIL TO RUN AFTER FIRST HOUR OF OPERATION (CCF)	1.2E-06	4.4E-06	4.5E+00
452	HPICF4PMLR001-12	SIS-MPP-001B,C (SI PUMP) FAIL TO RUN AFTER FIRST HOUR OF OPERATION (CCF)	1.2E-06	4.4E-06	4.5E+00

Table 19.1-72 Basic Events (Hardware Failure, Human Error) RAW for Flood (Sheet 36 of 61)

Rank	Basic Event ID	Basic Event Description	Basic Event Probability	FV Importance	RAW
453	EFWCVOD008A	EFS-VLV-008A FAIL TO OPEN	9.6E-06	3.4E-05	4.5E+00
454	EFWCVPR008A	EFS-VLV-008A PLUG	2.4E-06	8.5E-06	4.5E+00
455	EFWCVEL008A	EFS-VLV-008A EXTERNAL LEAK LARGE	4.8E-08	1.7E-07	4.5E+00
456	RTPDASF	DAS FAILURE	1.0E-02	3.5E-02	4.5E+00
457	RSSCF4PMAD001-134	RHS-MPP-001A,B,C (CS/RHR PUMP) FAIL TO START (CCF)	6.3E-06	2.2E-05	4.4E+00
458	EPSCF4DLLRGTG-ALL	CLASS-1E GTG A,B,C,D FAIL TO RUN AFTER FIRST HOUR OF OPERATION (CCF)	9.9E-04	3.4E-03	4.4E+00
459	EPSCF4DLADGTG-ALL	CLASS-1E GTG A,B,C,D FAIL TO START (CCF)	2.1E-04	7.2E-04	4.4E+00
460	EPSCF4DLSRGTG-ALL	CLASS-1E GTG A,B,C,D FAIL TO RUN DURING FIRST HOUR OF OPERATION (CCF)	1.6E-04	5.3E-04	4.4E+00
461	EPSCF4SEFFGTG-ALL	CLASS-1E GTG A,B,C,D SEQUENCER FAIL TO OPERATE (CCF)	3.8E-05	1.3E-04	4.4E+00
462	EPSCF4CBFC52EPS-ALL	EPS 52/EPSA,B,C,D (BREAKER) FAIL TO CLOSE (CCF)	2.0E-05	6.9E-05	4.4E+00
463	EPSCF4CBSO52EPS-ALL	EPS 52/EPSA,B,C,D (BREAKER) SPURIOUS OPEN (CCF)	1.6E-07	5.4E-07	4.4E+00
464	RSSCF4MVOD004-24	CSS-MOV-004A,C FAIL TO OPEN (CCF)	5.7E-06	1.9E-05	4.4E+00
465	RSSCF4MVOD004-12	CSS-MOV-004B,C FAIL TO OPEN (CCF)	5.7E-06	1.9E-05	4.4E+00

Table 19.1-72 Basic Events (Hardware Failure, Human Error) RAW for Flood (Sheet 37 of 61)

Rank	Basic Event ID	Basic Event Description	Basic Event Probability	FV Importance	RAW
466	RSSCF4CVOD005-12	CSS-VLV-005B,C FAIL TO OPEN (CCF)	2.0E-07	6.8E-07	4.4E+00
467	RSSCF4CVOD005-24	CSS-VLV-005A,CFAIL TO OPEN (CCF)	2.0E-07	6.8E-07	4.4E+00
468	CWSCF4MVCD007-234	NCS-MOV-007A,C,D FAIL TO CLOSE (CCF)	4.2E-06	1.4E-05	4.4E+00
469	CWSCF4MVCD007-123	NCS-MOV-007B,C,D FAIL TO CLOSE (CCF)	4.2E-06	1.4E-05	4.4E+00
470	CWSCF4MVCD020-234	NCS-MOV-020A,C,D FAIL TO CLOSE (CCF)	4.2E-06	1.4E-05	4.4E+00
471	CWSCF4MVCD020-123	NCS-MOV-020B,C,D FAIL TO CLOSE (CCF)	4.2E-06	1.4E-05	4.4E+00
472	HPICF4PMLR001-124	SIS-MPP-001A,B,C (SI PUMP) FAIL TO RUN AFTER FIRST HOUR OF OPERATION (CCF)	1.1E-06	3.8E-06	4.3E+00
473	SGNOO01S	(HE) FAIL TO START SAFETY INJECTION PUMP BY DAS	5.7E-02	2.0E-01	4.3E+00
474	RSSCF4MVOD145-24	NCS-MOV-145B,D FAIL TO OPEN (CCF)	5.7E-06	1.9E-05	4.3E+00
475	RSSCF4MVOD145-12	NCS-MOV-145B,C FAIL TO OPEN (CCF)	5.7E-06	1.9E-05	4.3E+00
476	RSSCF4PMSR001-12	RHS-MPP-001B,C (CS/RHR PUMP) FAIL TO RUN DURING FIRST HOUR OF OPERATION (CCF)	3.3E-06	1.1E-05	4.2E+00
477	RSSCF4PMSR001-24	RHS-MPP-001A,C (CS/RHR PUMP) FAIL TO RUN DURING FIRST HOUR OF OPERATION (CCF)	3.3E-06	1.1E-05	4.2E+00

Table 19.1-72 Basic Events (Hardware Failure, Human Error) RAW for Flood (Sheet 38 of 61)

Rank	Basic Event ID	Basic Event Description	Basic Event Probability	FV Importance	RAW
478	RSSCF4PMLR001-24	RHS-MPP-001A,C (CS/RHR PUMP) FAIL TO RUN AFTER FIRST HOUR OF OPERATION (CCF)	1.2E-06	3.7E-06	4.2E+00
479	RSSCF4PMLR001-12	RHS-MPP-001B,C (CS/RHR PUMP) FAIL TO RUN AFTER FIRST HOUR OF OPERATION (CCF)	1.2E-06	3.7E-06	4.2E+00
480	EPSCF4DLLRGTG-234	CLASS-1E GTG A,C,D FAIL TO RUN AFTER FIRST HOUR OF OPERATION (CCF)	2.5E-04	8.0E-04	4.2E+00
481	EPSCF4DLADGTG-134	CLASS-1E GTG A,C,D FAIL TO START (CCF)	5.2E-05	1.7E-04	4.2E+00
482	EPSCF4DLSRGTG-234	CLASS-1E GTG A,C,D FAIL TO RUN DURING FIRST HOUR OF OPERATION (CCF)	3.9E-05	1.3E-04	4.2E+00
483	EPSCF4SEFFGTG-234	CLASS-1E GTG A,C,D SEQUENCER FAIL TO OPERATE (CCF)	1.3E-05	4.1E-05	4.2E+00
484	EPSCF4CBFC52EPS-123	EPS 52/EPSA,C,D (BREAKER) FAIL TO CLOSE (CCF)	5.2E-06	1.7E-05	4.2E+00
485	EPSCF4CBSO52EPS-234	EPS 52/EPSA,C,D (BREAKER) SPURIOUS OPEN (CCF)	2.9E-08	9.5E-08	4.2E+00
486	EPSCF4DLLRGTG-23	CLASS-1E GTG C,D FAIL TO RUN AFTER FIRST HOUR OF OPERATION (CCF)	2.5E-04	8.2E-04	4.2E+00
487	EPSCF4DLLRGTG-123	CLASS-1E GTG B,C,D FAIL TO RUN AFTER FIRST HOUR OF OPERATION (CCF)	2.5E-04	8.0E-04	4.2E+00
488	EPSCF4DLADGTG-234	CLASS-1E GTG B,C,D FAIL TO START (CCF)	5.2E-05	1.7E-04	4.2E+00
489	EPSCF4DLADGTG-34	CLASS-1E GTG C,D FAIL TO START (CCF)	4.3E-05	1.4E-04	4.2E+00

Table 19.1-72 Basic Events (Hardware Failure, Human Error) RAW for Flood (Sheet 39 of 61)

Rank	Basic Event ID	Basic Event Description	Basic Event Probability	FV Importance	RAW
490	EPSCF4DLSRGTG-23	CLASS-1E GTG C,D FAIL TO RUN DURING FIRST HOUR OF OPERATION (CCF)	4.0E-05	1.3E-04	4.2E+00
491	EPSCF4DLSRGTG-123	CLASS-1E GTG B,C,D FAIL TO RUN DURING FIRST HOUR OF OPERATION (CCF)	3.9E-05	1.3E-04	4.2E+00
492	EPSCF4SEFFGTG-23	CLASS-1E GTG C,D SEQUENCER FAIL TO OPERATE (CCF)	2.5E-05	8.1E-05	4.2E+00
493	EPSCF4SEFFGTG-123	CLASS-1E GTG B,C,D SEQUENCER FAIL TO OPERATE (CCF)	1.3E-05	4.1E-05	4.2E+00
494	EPSCF4CBFC52EPS-134	EPS 52/EPSB,C,D (BREAKER) FAIL TO CLOSE (CCF)	5.2E-06	1.7E-05	4.2E+00
495	EPSCF4CBFC52EPS-13	EPS 52/EPS C,D (BREAKER) FAIL TO CLOSE (CCF)	5.0E-06	1.6E-05	4.2E+00
496	EPSCF4CBSO52EPS-23	EPS 52/EPSC,D (BREAKER) SPURIOUS OPEN (CCF)	3.4E-08	1.1E-07	4.2E+00
497	EPSCF4CBSO52EPS-123	EPS 52/EPSB,C,D (BREAKER) SPURIOUS OPEN (CCF)	2.9E-08	9.5E-08	4.2E+00
498	HPICVEL004A	SIS-VLV-004A EXTERNAL LEAK LARGE	4.8E-08	1.5E-07	4.2E+00
499	HPIMVEL009A	SIS-MOV-009A EXTERNAL LEAK LARGE	2.4E-08	7.7E-08	4.2E+00
500	HPIPNELINJSA	SIS A-SI PUMP DISCHARGE LINE (OUTSIDE C/V) PIPING EXTERNAL LEAK LARGE	6.0E-10	1.9E-09	4.2E+00
501	HPIPNELSUCTLA	SIS PIPING A BETWEEN SIS-MOV-001A AND A-SI PUMP EXTERNAL LEAK LARGE	6.0E-10	1.9E-09	4.2E+00
502	EFWXVPR007A	EFS-VLV-007A PLUG	2.4E-06	7.6E-06	4.2E+00

Table 19.1-72 Basic Events (Hardware Failure, Human Error) RAW for Flood (Sheet 40 of 61)

Rank	Basic Event ID	Basic Event Description	Basic Event Probability	FV Importance	RAW
503	EFWXVEL007A	EFS-VLV-007A EXTERNAL LEAK LARGE	7.2E-08	2.3E-07	4.2E+00
504	EFWXVEL009B	EFS-VLV-009B EXTERNAL LEAK LARGE	7.2E-08	2.3E-07	4.2E+00
505	EFWXVEL009A	EFS-VLV-009A EXTERNAL LEAK LARGE	7.2E-08	2.3E-07	4.2E+00
506	EFWTNEL001A	EFS-MPT-001A (A-EFW PIT) EXTERNAL LEAK LARGE	4.8E-08	1.5E-07	4.2E+00
507	EFWPNELCSTA	EFS A-EFW PIT OUTLET PIPING EXTERNAL LEAK LARGE	6.0E-10	1.9E-09	4.2E+00
508	HPICF4CVOD004-124	SIS-VLV-004A,B,C FAIL TO OPEN (CCF)	2.7E-07	8.3E-07	4.1E+00
509	HPICF4CVOD012-124	SIS-VLV-012A,B,C FAIL TO OPEN (CCF)	2.7E-07	8.3E-07	4.1E+00
510	HPICF4CVOD013-124	SIS-VLV-013A,B,C FAIL TO OPEN (CCF)	2.7E-07	8.3E-07	4.1E+00
511	HPICF4CVOD010-124	SIS-VLV-010A,B,C FAIL TO OPEN (CCF)	2.7E-07	8.3E-07	4.1E+00
512	RSSMVPRCSS001C	CSS-MOV-001C PLUG	2.4E-06	7.0E-06	3.9E+00
513	RSSMVCMCSS001C	CSS-MOV-001C SPURIOUS CLOSE	9.6E-07	2.8E-06	3.9E+00
514	EPSBYFFBATC	C-CLASS 1E BATTERY FAIL TO OPERATE	3.8E-06	1.1E-05	3.9E+00
515	EPSCBSO72DBC	EPS 72/DBC (BREAKER) SPURIOUS OPEN	3.0E-06	8.8E-06	3.9E+00

Table 19.1-72 Basic Events (Hardware Failure, Human Error) RAW for Flood (Sheet 41 of 61)

Rank	Basic Event ID	Basic Event Description	Basic Event Probability	FV Importance	RAW
516	SWSTMPE001D	EWS-MPP-001D (D-ESW PUMP) TEST & MAINTENANCE	1.2E-02	3.4E-02	3.8E+00
517	CWSTMRC001D	NCS-MHX-001D (D-CCW HX) TEST & MAIN-TENANCE	7.0E-03	2.0E-02	3.8E+00
518	CWSTMPC001D	NCS-MPP-001D (D-CCW PUMP) TEST & MAINTENANCE	6.0E-03	1.7E-02	3.8E+00
519	RWSPMEL001B	RWS-MPP-001B (B-RWR PUMP) EXTERNAL LEAK LARGE	1.9E-07	5.3E-07	3.7E+00
520	RWSPMEL001A	RWS-MPP-001A (A-RWR PUMP) EXTERNAL LEAK LARGE	1.9E-07	5.3E-07	3.7E+00
521	RWSXVEL103A	SFS-VLV-103A EXTERNAL LEAK LARGE	7.2E-08	2.0E-07	3.7E+00
522	RWSXVEL101	RWS-VLV-101 EXTERNAL LEAK LARGE	7.2E-08	2.0E-07	3.7E+00
523	RWSXVEL013A	RWS-VLV-013A EXTERNAL LEAK LARGE	7.2E-08	2.0E-07	3.7E+00
524	RWSXVEL014	RWS-VLV-014 EXTERNAL LEAK LARGE	7.2E-08	2.0E-07	3.7E+00
525	RWSXVEL066B	NCS-VLV-066B EXTERNAL LEAK LARGE	7.2E-08	2.0E-07	3.7E+00
526	RWSXVEL006B	RWS-VLV-006B EXTERNAL LEAK LARGE	7.2E-08	2.0E-07	3.7E+00
527	RWSXVEL066A	NCS-VLV-066A EXTERNAL LEAK LARGE	7.2E-08	2.0E-07	3.7E+00
528	RWSXVEL005	RWS-VLV-005 EXTERNAL LEAK LARGE	7.2E-08	2.0E-07	3.7E+00

Table 19.1-72 Basic Events (Hardware Failure, Human Error) RAW for Flood (Sheet 42 of 61)

Rank	Basic Event ID	Basic Event Description	Basic Event Probability	FV Importance	RAW
529	RWSXVEL028	SFS-VLV-028 EXTERNAL LEAK LARGE	7.2E-08	2.0E-07	3.7E+00
530	RWSXVEL006A	RWS-VLV-006A EXTERNAL LEAK LARGE	7.2E-08	2.0E-07	3.7E+00
531	RWSXVEL021	RWS-VLV-021 EXTERNAL LEAK LARGE	7.2E-08	2.0E-07	3.7E+00
532	RWSXVEL013B	RWS-VLV-013B EXTERNAL LEAK LARGE	7.2E-08	2.0E-07	3.7E+00
533	RWSXVEL103B	SFS-VLV-103B EXTERNAL LEAK LARGE	7.2E-08	2.0E-07	3.7E+00
534	RWSCVEL027	SFS-VLV-027 EXTERNAL LEAK LARGE	4.8E-08	1.3E-07	3.7E+00
535	RWSCVEL065A	NCS-VLV-065A EXTERNAL LEAK LARGE	4.8E-08	1.3E-07	3.7E+00
536	RWSCVEL065B	NCS-VLV-065B EXTERNAL LEAK LARGE	4.8E-08	1.3E-07	3.7E+00
537	RWSCVEL037	LMS-VLV-037 EXTERNAL LEAK LARGE	4.8E-08	1.3E-07	3.7E+00
538	RWSCVEL012A	RWS-VLV-012A EXTERNAL LEAK LARGE	4.8E-08	1.3E-07	3.7E+00
539	RWSCVEL012B	RWS-VLV-012B EXTERNAL LEAK LARGE	4.8E-08	1.3E-07	3.7E+00
540	RWSPNELPIPE4	RWS PIPING BETWEEN RWS-VLV-004 AND RWSAT EXTERNAL LEAK LARGE	6.0E-10	1.6E-09	3.7E+00
541	SWSCF2PMBD001BD-ALL	EWS-MPP-001B,D (ESW PUMP) FAIL TO START (CCF)	1.4E-04	3.7E-04	3.7E+00

Table 19.1-72 Basic Events (Hardware Failure, Human Error) RAW for Flood (Sheet 43 of 61)

Rank	Basic Event ID	Basic Event Description	Basic Event Probability	FV Importance	RAW
542	SWSPMBD001D	EWS-MPP-001D (D-ESW PUMP) FAIL TO START	1.9E-03	5.1E-03	3.7E+00
543	SWSMVOD503D	EWS-MOV-503D FAIL TO OPEN	1.0E-03	2.7E-03	3.7E+00
544	SWSSTPRST001D	EWS-SST-001D (STRAINER) PLUG	1.7E-04	4.5E-04	3.7E+00
545	SWSCVOD502D	EWS-VLV-502D FAIL TO OPEN	1.1E-05	3.0E-05	3.7E+00
546	SWSXVPR506D	EWS-VLV-506D PLUG	2.4E-06	6.4E-06	3.7E+00
547	SWSXVPR508D	EWS-VLV-508D PLUG	2.4E-06	6.4E-06	3.7E+00
548	SWSCVPR502D	EWS-VLV-502D PLUG	2.4E-06	6.4E-06	3.7E+00
549	SWSMVPR503D	EWS-MOV-503D PLUG	2.4E-06	6.4E-06	3.7E+00
550	SWSMVCM503D	EWS-MOV-503D SPURIOUS CLOSE	9.6E-07	2.5E-06	3.7E+00
551	SWSXVEL508D	EWS-VLV-508D EXTERNAL LEAK LARGE	7.2E-08	1.9E-07	3.7E+00
552	SWSXVEL506D	EWS-VLV-506D EXTERNAL LEAK LARGE	7.2E-08	1.9E-07	3.7E+00
553	SWSXVEL509D	EWS-VLV-509D EXTERNAL LEAK LARGE	7.2E-08	1.9E-07	3.7E+00
554	SWSXVEL507D	EWS-VLV-507D EXTERNAL LEAK LARGE	7.2E-08	1.9E-07	3.7E+00

Table 19.1-72 Basic Events (Hardware Failure, Human Error) RAW for Flood (Sheet 44 of 61)

Rank	Basic Event ID	Basic Event Description	Basic Event Probability	FV Importance	RAW
555	SWSXVEL701D	EWS-VLV-701D EXTERNAL LEAK LARGE	7.2E-08	1.9E-07	3.7E+00
556	SWSCVEL502D	EWS-VLV-502D EXTERNAL LEAK LARGE	4.8E-08	1.3E-07	3.7E+00
557	SWSMVEL503D	EWS-MOV-503D EXTERNAL LEAK LARGE	2.4E-08	6.4E-08	3.7E+00
558	SWSPEELSWPD1	EWS D-ESW PUMP DISCHARGE LINE PIP-ING EXTERNAL LEAK LARGE	3.6E-09	9.6E-09	3.7E+00
559	CWSPCBD001D	NCS-MPP-001D (D-CCW PUMP) FAIL TO START	1.0E-03	2.7E-03	3.6E+00
560	CWSPCYR001D	NCS-MPP-001D (D-CCW PUMP) FAIL TO RUN	6.2E-05	1.7E-04	3.6E+00
561	CWSORPR043	NCS-FE-043 (ORIFICE) PLUG	2.4E-05	6.4E-05	3.6E+00
562	CWSXVPR101D	NCS-VLV-101D PLUG	2.4E-06	6.4E-06	3.6E+00
563	CWSXVPR104D	NCS-VLV-104D PLUG	2.4E-06	6.4E-06	3.6E+00
564	EPSCBFO52RAT-ABD	EPS 52/RATA,B,D (BREAKER) FAIL TO OPEN (CCF)	5.2E-06	1.4E-05	3.6E+00
565	EPSCBFO52UAT-ABD	EPS 52/UATA,B,D (BREAKER) FAIL TO OPEN (CCF)	5.2E-06	1.4E-05	3.6E+00
566	EPSCF4CBSC52UAT-124	EPS 52/UATA,B,D (BREAKER) SPURIOUS CLOSE (CCF)	2.9E-08	7.7E-08	3.6E+00
567	EPSCF4CBSC52RAT-124	EPS 52/RATA,B,D (BREAKER) SPURIOUS CLOSE (CCF)	2.9E-08	7.7E-08	3.6E+00

Table 19.1-72 Basic Events (Hardware Failure, Human Error) RAW for Flood (Sheet 45 of 61)

Rank	Basic Event ID	Basic Event Description	Basic Event Probability	FV Importance	RAW
568	SGNPIFD4001D	SLS-D POWER I/F D (DIGITAL PART) FAIL-URE	2.7E-04	6.5E-04	3.4E+00
569	RSSCF4PMSR001-124	RHS-MPP-001A,B,C (CS/RHR PUMP) FAIL TO RUN DURING FIRST HOUR OF OPERATION	1.7E-06	3.9E-06	3.4E+00
570	RSSCF4PMLR001-124	RHS-MPP-001A,B,C (CS/RHR PUMP) FAIL TO RUN AFTER FIRST HOUR OF OPERATION	5.8E-07	1.4E-06	3.4E+00
571	SWSSTPRST003D	EWS-SST-003D (STRAINER) PLUG	1.7E-04	4.0E-04	3.4E+00
572	CWSORPR038	NCS-FE-038 (ORIFICE) PLUG	2.4E-05	5.7E-05	3.4E+00
573	SWSORPR001D	EWS-SRO-001D (ORIFICE) PLUG	2.4E-05	5.7E-05	3.4E+00
574	SWSORPR037	EWS-FE-037 (ORIFICE) PLUG	2.4E-05	5.7E-05	3.4E+00
575	SWSXVPR517D	EWS-VLV-517D PLUG	2.4E-06	5.7E-06	3.4E+00
576	CWSXVPR018D	NCS-VLV-018D PLUG	2.4E-06	5.7E-06	3.4E+00
577	CWSXVPR008D	NCS-VLV-008D PLUG	2.4E-06	5.7E-06	3.4E+00
578	SWSXVPR514D	EWS-VLV-514D PLUG	2.4E-06	5.7E-06	3.4E+00
579	SWSXVPR520D	EWS-VLV-520D PLUG	2.4E-06	5.7E-06	3.4E+00
580	CWSCVPR016D	NCS-VLV-016D PLUG	2.4E-06	5.7E-06	3.4E+00

Table 19.1-72 Basic Events (Hardware Failure, Human Error) RAW for Flood (Sheet 46 of 61)

Rank	Basic Event ID	Basic Event Description	Basic Event Probability	FV Importance	RAW
581	SWSXVPR511D	EWS-VLV-511D PLUG	2.4E-06	5.7E-06	3.4E+00
582	CWSXVPR005D	NCS-VLV-005D PLUG	2.4E-06	5.7E-06	3.4E+00
583	SWSRIEL001D	NCS-MHX-001D (D-CCW HX) TUBE EXTERNAL LEAK LARGE	7.2E-07	1.7E-06	3.4E+00
584	SWSPMEL001D	EWS-MPP-001D (D-ESW PUMP) EXTERNAL LEAK LARGE	1.9E-07	4.5E-07	3.4E+00
585	SWSXVEL511D	EWS-VLV-511D EXTERNAL LEAK LARGE	7.2E-08	1.7E-07	3.4E+00
586	SWSXVEL514D	EWS-VLV-514D EXTERNAL LEAK LARGE	7.2E-08	1.7E-07	3.4E+00
587	SWSPEELSWSD3	EWS D-CCW HX COOLING LINE PIPING EXTERNAL LEAK LARGE	3.6E-09	8.5E-09	3.4E+00
588	RWSSUPR001D	SIS-SST-001D (D-ESS/CS STRAINER) PLUG DURING OPERATION	2.1E-04	4.7E-04	3.2E+00
589	EFWCF4CVOD012-13	EFS-VLV-012A,B FAIL TO OPEN (CCF)	2.3E-07	5.0E-07	3.2E+00
590	EFWXVEL026A	EFS-VLV-026A EXTERNAL LEAK LARGE	7.2E-08	1.6E-07	3.2E+00
591	EFWPNELTESTA	EFS A,B-EFW PUMP TEST LINE PIPING EXTERNAL LEAK LARGE	6.0E-10	1.3E-09	3.2E+00
592	SWSPMYR001D	EWS-MPP-001D (D-ESW PUMP) FAIL TO RUN	1.1E-04	2.4E-04	3.2E+00
593	HPICF4CVOD012-12	SIS-VLV-012B,C FAIL TO OPEN (CCF)	1.6E-07	3.4E-07	3.1E+00

Table 19.1-72 Basic Events (Hardware Failure, Human Error) RAW for Flood (Sheet 47 of 61)

Rank	Basic Event ID	Basic Event Description	Basic Event Probability	FV Importance	RAW
594	HPICF4CVOD013-12	SIS-VLV-013B,C FAIL TO OPEN (CCF)	1.6E-07	3.4E-07	3.1E+00
595	HPICF4CVOD013-24	SIS-VLV-013A,C FAIL TO OPEN (CCF)	1.6E-07	3.4E-07	3.1E+00
596	HPICF4CVOD004-12	SIS-VLV-004B,C FAIL TO OPEN (CCF)	1.6E-07	3.4E-07	3.1E+00
597	HPICF4CVOD012-24	SIS-VLV-012A,C FAIL TO OPEN (CCF)	1.6E-07	3.4E-07	3.1E+00
598	HPICF4CVOD004-24	SIS-VLV-004A,C FAIL TO OPEN (CCF)	1.6E-07	3.4E-07	3.1E+00
599	HPICF4CVOD010-24	SIS-VLV-010A,C FAIL TO OPEN (CCF)	1.6E-07	3.4E-07	3.1E+00
600	HPICF4CVOD010-12	SIS-VLV-010B,C FAIL TO OPEN (CCF)	1.6E-07	3.4E-07	3.1E+00
601	EPSCBFO52RAT-AD	EPS 52/RATA,D (BREAKER) FAIL TO OPEN (CCF)	5.0E-06	1.0E-05	3.1E+00
602	EPSCBFO52UAT-AD	EPS 52/UATA,D (BREAKER) FAIL TO OPEN (CCF)	5.0E-06	1.0E-05	3.1E+00
603	EPSCF4CBSC52RAT-14	EPS 52/RATA,D (BREAKER) SPURIOUS CLOSE (CCF)	3.4E-08	7.0E-08	3.1E+00
604	EPSCF4CBSC52UAT-14	EPS 52/UATA,D (BREAKER) SPURIOUS CLOSE (CCF)	3.4E-08	7.0E-08	3.1E+00
605	CWSCF2PCBD001BD-ALL	NCS-MPP-001B,D (CCW PUMP) FAIL TO START (CCF)	7.5E-05	1.6E-04	3.1E+00

Table 19.1-72 Basic Events (Hardware Failure, Human Error) RAW for Flood (Sheet 48 of 61)

Rank	Basic Event ID	Basic Event Description	Basic Event Probability	FV Importance	RAW
606	CWSCF2PCYR001BD-ALL	NCS-MPP-001B,D (CCW PUMP) FAIL TO RUN (CCF)	5.0E-06	1.0E-05	3.1E+00
607	EFWCF2PMAD001BC-ALL	EFS-MPP-001B,C (EFW PUMP) FAIL TO START (CCF)	2.2E-04	4.5E-04	3.0E+00
608	HVACF2AHSR401-ALL	VRS-MAH-401B,C (EFW PUMP AIR HANDLING UNIT) FAIL TO RUN DURING FIRST HOUR OF OPERATION (CCF)	1.2E-04	2.4E-04	3.0E+00
609	VCWCF2CHYR001-ALL	VWS-MEQ-001B,C (ESSENTIAL CHILLER UNIT) FAIL TO RUN (CCF)	1.0E-04	2.1E-04	3.0E+00
610	HVACF2AHAD401-ALL	VRS-MAH-401B,C (EFW PUMP AIR HAN-DLING UNIT) FAIL TO START (CCF)	3.8E-05	7.7E-05	3.0E+00
611	EFWCF2PMSR001BC-ALL	EFS-MPP-001B,C (EFW PUMP) FAIL TO RUN DURING FIRST HOUR OF OPERATION (CCF)	1.7E-05	3.5E-05	3.0E+00
612	EFWCF2PMLR001BC-ALL	EFS-MPP-001B,C (EFW PUMP) FAIL TO RUN AFTER FIRST HOUR OF OPERATION (CCF)	5.9E-06	1.2E-05	3.0E+00
613	VCWCF2PMYR001-ALL	VWS-MPP-001B,C (ESSENTIAL CHILLED WATER PUMP) FAIL TO RUN (CCF)	5.6E-06	1.2E-05	3.0E+00
614	HVACF2AHLR401-ALL	VRS-MAH-401B,C (EFW PUMP AIR HANDLING UNIT) FAIL TO RUN AFTER FIRST HOUR OF OPERATION (CCF)	4.3E-06	8.9E-06	3.0E+00
615	EFWCF4CVOD012-12	EFS-VLV-012B,C FAIL TO OPEN (CCF)	2.3E-07	4.6E-07	3.0E+00
616	RSSOO01CSP	(HE) FAIL TO START CV SPRAY SYSTEM	5.0E-03	1.0E-02	3.0E+00

Table 19.1-72 Basic Events (Hardware Failure, Human Error) RAW for Flood (Sheet 49 of 61)

Rank	Basic Event ID	Basic Event Description	Basic Event Probability	FV Importance	RAW
617	EPSBYFFBATD	D-CLASS 1E BATTERY FAIL TO OPERATE	3.8E-06	7.6E-06	3.0E+00
618	EPSCBSO72DBD	EPS 72/DBD (BREAKER) SPURIOUS OPEN	3.0E-06	6.0E-06	3.0E+00
619	RSSCF4MVOD145-124	NCS-MOV-145A,B,C FAIL TO OPEN (CCF)	1.5E-06	2.8E-06	2.9E+00
620	RSSCF4MVOD004-124	CSS-MOV-004A,B,C FAIL TO OPEN (CCF)	1.5E-06	2.8E-06	2.9E+00
621	RSSCF4CVOD005-124	CSS-VLV-005A,B,C FAIL TO OPEN (CCF)	2.2E-07	4.3E-07	2.9E+00
622	SWSORPR002D	EWS-SRO-002D (ORIFICE) PLUG	2.4E-05	4.6E-05	2.9E+00
623	SWSFMPR073	EWS-FT-073 (FLOW METER) PLUG	2.4E-05	4.6E-05	2.9E+00
624	SWSCVOD602D	EWS-VLV-602D FAIL TO OPEN	1.1E-05	2.2E-05	2.9E+00
625	SWSXVPR601D	EWS-VLV-601D PLUG	2.4E-06	4.6E-06	2.9E+00
626	SWSCVPR602D	EWS-VLV-602D PLUG	2.4E-06	4.6E-06	2.9E+00
627	SWSXVEL601D	EWS-VLV-601D EXTERNAL LEAK LARGE	7.2E-08	1.4E-07	2.9E+00
628	SWSCVEL602D	EWS-VLV-602D EXTERNAL LEAK LARGE	4.8E-08	9.3E-08	2.9E+00
629	SWSPEELSWSD2	EWS D-ESW PUMP COOLING LINE PIPING EXTERNAL LEAK LARGE	3.6E-09	7.0E-09	2.9E+00

Table 19.1-72 Basic Events (Hardware Failure, Human Error) RAW for Flood (Sheet 50 of 61)

Rank	Basic Event ID	Basic Event Description	Basic Event Probability	FV Importance	RAW
630	EPSCBFO52UAT-BD	EPS 52/UATB,D (BREAKER) FAIL TO OPEN (CCF)	5.0E-06	9.3E-06	2.9E+00
631	EPSCBFO52RAT-BD	EPS 52/RATB,D (BREAKER) FAIL TO OPEN (CCF)	5.0E-06	9.3E-06	2.9E+00
632	EPSCF4CBSC52UAT-24	EPS 52/UATB,D (BREAKER) SPURIOUS CLOSE (CCF)	3.4E-08	6.3E-08	2.9E+00
633	EPSCF4CBSC52RAT-24	EPS 52/RATB,D (BREAKER) SPURIOUS CLOSE (CCF)	3.4E-08	6.3E-08	2.9E+00
634	SGNBTSWCCF1	GROUP-1 APPLICATION SOFTWARE CCF	1.0E-05	1.8E-05	2.8E+00
635	SGNOO04ICVR12	(HE) MISCALIBRATION OF C/V PRESSURE SENSORS A,B,C,D	6.7E-05	1.2E-04	2.8E+00
636	SGNCF4ICVR0012-ALL	CONTAINMENT PRESSURE SENSOR CCF	1.3E-06	2.2E-06	2.8E+00
637	SWSCF2PMYR001BD-ALL	EWS-MPP-001B,D (ESW PUMP) FAIL TO RUN (CCF)	8.9E-06	1.4E-05	2.6E+00
638	HPIPMAD001D	SIS-MPP-001D (D-SI PUMP) FAIL TO START	1.3E-03	2.0E-03	2.6E+00
639	EFWCF2PTAD001AD-ALL	EFS-MPP-001A,D (EFW PUMP) FAIL TO START (CCF)	4.5E-04	7.0E-04	2.5E+00
640	EFWCF2PTSR001AD-ALL	EFS-MPP-001A,D (EFW PUMP) FAIL TO RUN DURING FIRST HOUR OF OPERATION (CCF)	1.1E-04	1.7E-04	2.5E+00
641	EFWCF2PTLR001AD-ALL	EFS-MPP-001A,D (EFW PUMP) FAIL TO RUN AFTER FIRST HOUR OF OPERATION (CCF)	7.2E-05	1.1E-04	2.5E+00
642	EFWCF2MVOD103-ALL	EFS-MOV-103A,D FAIL TO OPEN (CCF)	4.2E-05	6.5E-05	2.5E+00

Table 19.1-72 Basic Events (Hardware Failure, Human Error) RAW for Flood (Sheet 51 of 61)

Rank	Basic Event ID	Basic Event Description	Basic Event Probability	FV Importance	RAW
643	HPIPMEL001D	SIS-MPP-001D (D-SI PUMP) EXTERNAL LEAK LARGE	1.9E-07	2.9E-07	2.5E+00
644	HPIPMEL001C	SIS-MPP-001C (C-SI PUMP) EXTERNAL LEAK LARGE	1.9E-07	2.9E-07	2.5E+00
645	RSSPMEL001D	RHS-MPP-001D (D-CS/RHR PUMP) EXTERNAL LEAK LARGE	1.9E-07	2.9E-07	2.5E+00
646	RSSPMEL001C	RHS-MPP-001C (C-CS/RHR PUMP) EXTERNAL LEAK LARGE	1.9E-07	2.9E-07	2.5E+00
647	HPIPMEL001B	SIS-MPP-001B (B-SI PUMP) EXTERNAL LEAK LARGE	1.9E-07	2.8E-07	2.5E+00
648	RSSPMEL001B	RHS-MPP-001B (B-CS/RHR PUMP) EXTERNAL LEAK LARGE	1.9E-07	2.8E-07	2.5E+00
649	HPIPMSR001D	SIS-MPP-001D (D-SI PUMP) FAIL TO RUN DURING FIRST HOUR OF OPERATION	3.7E-04	5.3E-04	2.4E+00
650	EFWPTAD001D	EFS-MPP-001D (D-EFW PUMP) FAIL TO START	6.5E-03	9.0E-03	2.4E+00
651	EFWPTSR001D	EFS-MPP-001D (D-EFW PUMP) FAIL TO RUN DURING FIRST HOUR OF OPERATION	2.4E-03	3.3E-03	2.4E+00
652	EFWPTLR001D	EFS-MPP-001D (D-EFW PUMP) FAIL TO RUN AFTER FIRST HOUR OF OPERATION	1.5E-03	2.1E-03	2.4E+00
653	EFWMVOD103D	EFS-MOV-103D FAIL TO OPEN	9.6E-04	1.3E-03	2.4E+00
654	EFWXVIL023D	EFS-VLV-023D INTERNAL LEAK LARGE	1.1E-05	1.4E-05	2.4E+00
655	EFWCVOD012D	EFS-VLV-012D FAIL TO OPEN	9.5E-06	1.3E-05	2.4E+00

Table 19.1-72 Basic Events (Hardware Failure, Human Error) RAW for Flood (Sheet 52 of 61)

Rank	Basic Event ID	Basic Event Description	Basic Event Probability	FV Importance	RAW
656	EFWXVPR009D	EFS-VLV-009D PLUG	2.4E-06	3.3E-06	2.4E+00
657	EFWCVPR012D	EFS-VLV-012D PLUG	2.4E-06	3.3E-06	2.4E+00
658	EFWXVPR013D	EFS-VLV-013D PLUG	2.4E-06	3.3E-06	2.4E+00
659	EFWMVPR103D	EFS-MOV-103D PLUG	2.4E-06	3.3E-06	2.4E+00
660	EFWMVCM103D	EFS-MOV-103D SPURIOUS CLOSE	9.6E-07	1.3E-06	2.4E+00
661	EFWPTEL001D	EFS-MPP-001D (D-EFW PUMP) EXTERNAL LEAK LARGE	2.2E-07	3.0E-07	2.4E+00
662	EFWXVEL023D	EFS-VLV-023D EXTERNAL LEAK LARGE	7.2E-08	9.9E-08	2.4E+00
663	EFWXVEL021D	EFS-VLV-021D EXTERNAL LEAK LARGE	7.2E-08	9.9E-08	2.4E+00
664	EFWCVEL022D	EFS-VLV-022D EXTERNAL LEAK LARGE	4.8E-08	6.6E-08	2.4E+00
665	EFWCVEL020D	EFS-VLV-020D EXTERNAL LEAK LARGE	4.8E-08	6.6E-08	2.4E+00
666	EFWMVEL103D	EFS-MOV-103D EXTERNAL LEAK LARGE	2.4E-08	3.3E-08	2.4E+00
667	EFWPNELSTB	EFS D-T/D EFW PUMP STEAM SUPPLY LINE PIPING EXTERNAL LEAK LARGE	6.0E-10	8.2E-10	2.4E+00
668	EFWOO01014	(HE) FAIL TO OPEN EFW TIE-LINE VALVE BETWEEN TRAINS	2.6E-03	3.4E-03	2.3E+00

Table 19.1-72 Basic Events (Hardware Failure, Human Error) RAW for Flood (Sheet 53 of 61)

Rank	Basic Event ID	Basic Event Description	Basic Event Probability	FV Importance	RAW
669	CWSCVOD016D	NCS-VLV-016D FAIL TO OPEN	1.1E-05	1.5E-05	2.3E+00
670	RSSXVEL034D	RHS-VLV-034D EXTERNAL LEAK LARGE	7.2E-08	9.3E-08	2.3E+00
671	RSSXVEL031D	RHS-VLV-031D EXTERNAL LEAK LARGE	7.2E-08	9.3E-08	2.3E+00
672	RSSXVEL002D	CSS-VLV-002D EXTERNAL LEAK LARGE	7.2E-08	9.3E-08	2.3E+00
673	RSSMVEL004D	CSS-MOV-004D EXTERNAL LEAK LARGE	2.4E-08	3.1E-08	2.3E+00
674	RSSMVEL021D	RHS-MOV-021D EXTERNAL LEAK LARGE	2.4E-08	3.1E-08	2.3E+00
675	EPSBSFFMCCD	D-CLASS 1E 480V MCC FAILURE	5.8E-06	7.2E-06	2.3E+00
676	EPSCBSO52LCD	EPS 52/LCD (BREAKER) SPURIOUS OPEN	3.0E-06	3.8E-06	2.3E+00
677	HPIPMLR001D	SIS-MPP-001D (D-SI PUMP) FAIL TO RUN AFTER FIRST HOUR OF OPERATION	1.3E-04	1.6E-04	2.2E+00
678	HPIORPR083	NCS-FE-083 (ORIFICE) PLUG	2.4E-05	2.9E-05	2.2E+00
679	HPIORPR003D	SIS-SRO-003D (ORIFICE) PLUG	2.4E-05	2.9E-05	2.2E+00
680	HPIORPR087	NCS-FE-087 (ORIFICE) PLUG	2.4E-05	2.9E-05	2.2E+00
681	HPIORPR075	SIS-FE-075 (ORIFICE) PLUG	2.4E-05	2.9E-05	2.2E+00

Table 19.1-72 Basic Events (Hardware Failure, Human Error) RAW for Flood (Sheet 54 of 61)

Rank	Basic Event ID	Basic Event Description	Basic Event Probability	FV Importance	RAW
682	HPIXVPR116D	NCS-VLV-116D PLUG	2.4E-06	2.9E-06	2.2E+00
683	HPIXVPR119D	NCS-VLV-119D PLUG	2.4E-06	2.9E-06	2.2E+00
684	HPIXVPR114D	NCS-VLV-114D PLUG	2.4E-06	2.9E-06	2.2E+00
685	HPIXVPR115D	NCS-VLV-115D PLUG	2.4E-06	2.9E-06	2.2E+00
686	HPIXVPR023D	SIS-VLV-023D PLUG	2.4E-06	2.9E-06	2.2E+00
687	HPIXVPR111D	NCS-VLV-111D PLUG	2.4E-06	2.9E-06	2.2E+00
688	HPIMVOM014D	SIS-MOV-014D SPURIOUS OPEN	9.6E-07	1.2E-06	2.2E+00
689	HPIMVIL014D	SIS-MOV-014D INTERNAL LEAK LARGE	7.2E-08	8.7E-08	2.2E+00
690	HPIMVIL024D	SIS-MOV-024D INTERNAL LEAK LARGE	7.2E-08	8.7E-08	2.2E+00
691	HPIXVEL023D	SIS-VLV-023D EXTERNAL LEAK LARGE	7.2E-08	8.7E-08	2.2E+00
692	HPIMVEL024D	SIS-MOV-024D EXTERNAL LEAK LARGE	2.4E-08	2.9E-08	2.2E+00
693	HPIMVEL014D	SIS-MOV-014D EXTERNAL LEAK LARGE	2.4E-08	2.9E-08	2.2E+00
694	HPIPNELTESTCD	SIS TEST LINE D (FULL FLOW LINE) PIPING EXTERNAL LEAK LARGE	6.0E-10	7.3E-10	2.2E+00

Table 19.1-72 Basic Events (Hardware Failure, Human Error) RAW for Flood (Sheet 55 of 61)

Rank	Basic Event ID	Basic Event Description	Basic Event Probability	FV Importance	RAW
695	HPIPNELTESTOD	SIS TEST LINE D (BYPASS LINE) PIPING EXTERNAL LEAK LARGE	6.0E-10	7.3E-10	2.2E+00
696	EFWMVOD014D	EFS-MOV-014D FAIL TO OPEN	9.1E-04	1.1E-03	2.2E+00
697	EFWMVOD014C	EFS-MOV-014C FAIL TO OPEN	9.1E-04	1.1E-03	2.2E+00
698	RSSPMAD001D	RHS-MPP-001D (D-CS/RHR PUMP) FAIL TO START	1.4E-03	1.6E-03	2.2E+00
699	SGNST-CCWD	D-CCWP START SIGNAL FAILURE	1.2E-03	1.4E-03	2.1E+00
700	RSSMVOD004D	CSS-MOV-004D FAIL TO OPEN	9.0E-04	1.0E-03	2.1E+00
701	RSSCVOD005D	CSS-VLV-005D FAIL TO OPEN	1.0E-05	1.2E-05	2.1E+00
702	RSSMVPR004D	CSS-MOV-004D PLUG	2.4E-06	2.7E-06	2.1E+00
703	RSSCVPR005D	CSS-VLV-005D PLUG	2.4E-06	2.7E-06	2.1E+00
704	RSSXVPR002D	CSS-VLV-002D PLUG	2.4E-06	2.7E-06	2.1E+00
705	RSSMVCM004D	CSS-MOV-004D SPURIOUS CLOSE	9.6E-07	1.1E-06	2.1E+00
706	RSSMVOD145D	NCS-MOV-145D FAIL TO OPEN	9.0E-04	1.0E-03	2.1E+00

Table 19.1-72 Basic Events (Hardware Failure, Human Error) RAW for Flood (Sheet 56 of 61)

Rank	Basic Event ID	Basic Event Description	Basic Event Probability	FV Importance	RAW
707	RSSMVPR145D	NCS-MOV-145D PLUG	2.4E-06	2.7E-06	2.1E+00
708	RSSMVCM145D	NCS-MOV-145D SPURIOUS CLOSE	9.6E-07	1.1E-06	2.1E+00
709	HVATMAH401C	VRS-MAH-401C (C-EFW PUMP AIR HANDLING UNIT) TEST & MAINTENANCE	2.5E-03	2.8E-03	2.1E+00
710	HVAAHSR401C	VRS-MAH-401C (C-EFW PUMP AIR HANDLING UNIT) FAIL TO RUN DURING FIRST HOUR OF OPERATION	2.4E-03	2.7E-03	2.1E+00
711	VCWCHYR001C	VWS-MEQ-001C (C-ESSENTIAL CHILLER UNIT) FAIL TO RUN	2.1E-03	2.3E-03	2.1E+00
712	EFWPMAD001C	EFS-MPP-001C (C-EFW PUMP) FAIL TO START	1.3E-03	1.4E-03	2.1E+00
713	HVAAHAD401C	VRS-MAH-401C (C-EFW PUMP AIR HANDLING UNIT) FAIL TO START	7.6E-04	8.6E-04	2.1E+00
714	EFWPMSR001C	EFS-MPP-001C (C-EFW PUMP) FAIL TO RUN DURING FIRST HOUR OF OPERATION	3.8E-04	4.3E-04	2.1E+00
715	EFWPMLR001C	EFS-MPP-001C (C-EFW PUMP) FAIL TO RUN AFTER FIRST HOUR OF OPERATION	1.3E-04	1.5E-04	2.1E+00
716	VCWPMYR001C	VWS-MPP-001C (C-ESSENTIAL CHILLED WATER PUMP) FAIL TO RUN	1.1E-04	1.3E-04	2.1E+00
717	HVAAHLR401C	VRS-MAH-401C (C-EFW PUMP AIR HANDLING UNIT) FAIL TO RUN AFTER FIRST HOUR OF OPERATION	8.8E-05	9.9E-05	2.1E+00

Table 19.1-72 Basic Events (Hardware Failure, Human Error) RAW for Flood (Sheet 57 of 61)

Rank	Basic Event ID	Basic Event Description	Basic Event Probability	FV Importance	RAW
718	SWSORPR003C	EWS-SRO-003C (ORIFICE) PLUG	2.4E-05	2.7E-05	2.1E+00
719	VCWORPR101	VWS-FE-101 (ORIFICE) PLUG	2.4E-05	2.7E-05	2.1E+00
720	SWSORPR056	EWS-FE-056 (ORIFICE) PLUG	2.4E-05	2.7E-05	2.1E+00
721	EFWXVIL023C	EFS-VLV-023C INTERNAL LEAK LARGE	1.1E-05	1.2E-05	2.1E+00
722	EFWCVOD012C	EFS-VLV-012C FAIL TO OPEN	9.5E-06	1.1E-05	2.1E+00
723	EFWCVPR012C	EFS-VLV-012C PLUG	2.4E-06	2.7E-06	2.1E+00
724	SWSXVPR701C	EWS-VLV-701C PLUG	2.4E-06	2.7E-06	2.1E+00
725	SWSXVPR704C	EWS-VLV-704C PLUG	2.4E-06	2.7E-06	2.1E+00
726	EFWXVPR009C	EFS-VLV-009C PLUG	2.4E-06	2.7E-06	2.1E+00
727	EFWXVPR013C	EFS-VLV-013C PLUG	2.4E-06	2.7E-06	2.1E+00
728	VCWXVPR001C	VWS-VLV-001C PLUG	2.4E-06	2.7E-06	2.1E+00
729	VCWCVPR005C	VWS-VLV-005C PLUG	2.4E-06	2.7E-06	2.1E+00
730	VCWXVPR105C	VWS-VLV-105C PLUG	2.4E-06	2.7E-06	2.1E+00

Table 19.1-72 Basic Events (Hardware Failure, Human Error) RAW for Flood (Sheet 58 of 61)

Rank	Basic Event ID	Basic Event Description	Basic Event Probability	FV Importance	RAW
731	VCWMVPR422	VWS-TMV-422 PLUG	2.4E-06	2.7E-06	2.1E+00
732	VCWXVPR006C	VWS-VLV-006C PLUG	2.4E-06	2.7E-06	2.1E+00
733	VCWXVPR101C	VWS-VLV-101C PLUG	2.4E-06	2.7E-06	2.1E+00
734	VCWMVCM422	VWS-TMV-422 SPURIOUS OPERATION	9.6E-07	1.1E-06	2.1E+00
735	EFWPMEL001C	EFS-MPP-001C (C-EFW PUMP) EXTERNAL LEAK LARGE	1.9E-07	2.2E-07	2.1E+00
736	VCWXVEL105C	VWS-VLV-105C EXTERNAL LEAK LARGE	7.2E-08	8.1E-08	2.1E+00
737	EFWXVEL023C	EFS-VLV-023C EXTERNAL LEAK LARGE	7.2E-08	8.1E-08	2.1E+00
738	VCWXVEL001C	VWS-VLV-001C EXTERNAL LEAK LARGE	7.2E-08	8.1E-08	2.1E+00
739	VCWXVEL006C	VWS-VLV-006C EXTERNAL LEAK LARGE	7.2E-08	8.1E-08	2.1E+00
740	VCWXVEL102C	VWS-VLV-102C EXTERNAL LEAK LARGE	7.2E-08	8.1E-08	2.1E+00
741	VCWXVEL101C	VWS-VLV-101C EXTERNAL LEAK LARGE	7.2E-08	8.1E-08	2.1E+00
742	EFWXVEL021C	EFS-VLV-021C EXTERNAL LEAK LARGE	7.2E-08	8.1E-08	2.1E+00

Table 19.1-72 Basic Events (Hardware Failure, Human Error) RAW for Flood (Sheet 59 of 61)

Rank	Basic Event ID	Basic Event Description	Basic Event Probability	FV Importance	RAW
743	EFWCVEL022C	EFS-VLV-022C EXTERNAL LEAK LARGE	4.8E-08	5.4E-08	2.1E+00
744	EFWCVEL020C	EFS-VLV-020C EXTERNAL LEAK LARGE	4.8E-08	5.4E-08	2.1E+00
745	VCWTNEL001C	VWS-MTK-001C (C-ESSENTIAL CHILLED WATER COMPRESSION TANK) EXTERNAL LEAK LARGE	4.8E-08	5.4E-08	2.1E+00
746	VCWCVEL005C	VWS-VLV-005C EXTERNAL LEAK LARGE	4.8E-08	5.4E-08	2.1E+00
747	VCWMVEL422	VWS-TMV-422 EXTERNAL LEAK LARGE	2.4E-08	2.7E-08	2.1E+00
748	VCWPNELPIPEC	VWS ESSENTIAL CHILLED WATER LINE C PIPING EXTERNAL LEAK LARGE	6.0E-10	6.7E-10	2.1E+00
749	HPIORPR065	SIS-FE-065 (ORIFICE) PLUG	2.4E-05	2.7E-05	2.1E+00
750	HPIORPR001D	SIS-SRO-001D (ORIFICE) PLUG	2.4E-05	2.7E-05	2.1E+00
751	HPICVOD010D	SIS-VLV-010D FAIL TO OPEN	9.7E-06	1.1E-05	2.1E+00
752	HPICVOD004D	SIS-VLV-004D FAIL TO OPEN	9.7E-06	1.1E-05	2.1E+00
753	HPICVOD013D	SIS-VLV-013D FAIL TO OPEN	9.7E-06	1.1E-05	2.1E+00
754	HPICVOD012D	SIS-VLV-012D FAIL TO OPEN	9.7E-06	1.1E-05	2.1E+00

Table 19.1-72 Basic Events (Hardware Failure, Human Error) RAW for Flood (Sheet 60 of 61)

Rank	Basic Event ID	Basic Event Description	Basic Event Probability	FV Importance	RAW
755	HPICVPR013D	SIS-VLV-013D PLUG	2.4E-06	2.7E-06	2.1E+00
756	HPIMVPR009D	SIS-MOV-009D PLUG	2.4E-06	2.7E-06	2.1E+00
757	HPICVPR010D	SIS-VLV-010D PLUG	2.4E-06	2.7E-06	2.1E+00
758	HPICVPR012D	SIS-VLV-012D PLUG	2.4E-06	2.7E-06	2.1E+00
759	HPIMVPR011D	SIS-MOV-011D PLUG	2.4E-06	2.7E-06	2.1E+00
760	HPICVPR004D	SIS-VLV-004D PLUG	2.4E-06	2.7E-06	2.1E+00
761	HPIMVCM011D	SIS-MOV-011D SPURIOUS CLOSE	9.6E-07	1.1E-06	2.1E+00
762	HPIMVCM009D	SIS-MOV-009D SPURIOUS CLOSE	9.6E-07	1.1E-06	2.1E+00
763	HPICVEL013D	SIS-VLV-013D EXTERNAL LEAK LARGE	4.8E-08	5.3E-08	2.1E+00
764	HPICVEL012D	SIS-VLV-012D EXTERNAL LEAK LARGE	4.8E-08	5.3E-08	2.1E+00
765	HPICVEL010D	SIS-VLV-010D EXTERNAL LEAK LARGE	4.8E-08	5.3E-08	2.1E+00
766	HPIMVEL011D	SIS-MOV-011D EXTERNAL LEAK LARGE	2.4E-08	2.7E-08	2.1E+00
767	HPIPNELINJLD	SIS D-SI PUMP DISCHARGE LINE (INSIDE C/V) PIPING EXTERNAL LEAK LARGE	6.0E-10	6.7E-10	2.1E+00

Table 19.1-72 Basic Events (Hardware Failure, Human Error) RAW for Flood (Sheet 61 of 61)

Rank	Basic Event ID	Basic Event Description	Basic Event Probability	FV Importance	RAW
768	RSSPMSR001D	RHS-MPP-001D (D-CS/RHR PUMP) FAIL TO RUN DURING FIRST HOUR OF OPERATION	3.8E-04	4.1E-04	2.1E+00
769	RSSPMLR001D	RHS-MPP-001D (D-CS/RHR PUMP) FAIL TO RUN AFTER FIRST HOUR OF OPERATION	1.3E-04	1.4E-04	2.1E+00

Table 19.1-73 Common Cause Failure FV Importance for Flood

Rank	Basic Event ID	Basic Event Description	Basic Event Probability	FV Importance	RAW
1	HPICF4PMAD001-ALL	SIS-MPP-001A,B,C,D (SI PUMP) FAIL TO START (CCF)	1.1E-04	2.5E-02	2.2E+02
2	PZRCF2MVOD117-ALL	RCS-MOV-117A,B FAIL TO OPEN (CCF)	1.3E-04	2.2E-02	1.8E+02
3	SGNBTSWCCF2	GROUP-2 APPLICATION SOFTWARE CCF	1.0E-05	9.9E-03	9.9E+02
4	RSSCF4MVOD145-ALL	NCS-MOV-145A,B,C,D FAIL TO OPEN (CCF)	8.4E-05	6.8E-03	8.2E+01
5	RSSCF4MVOD004-ALL	CSS-MOV-004A,B,C,D FAIL TO OPEN (CCF)	8.4E-05	6.8E-03	8.2E+01
6	HPICF4PMAD001-23	SIS-MPP-001C,D (SI PUMP) FAIL TO START (CCF)	2.2E-05	4.6E-03	2.1E+02
7	EPSCF4DLLRGTG-ALL	CLASS-1E GTG A,B,C,D FAIL TO RUN AFTER FIRST HOUR OF OPERATION (CCF)	9.9E-04	3.4E-03	4.4E+00
8	CHICF2PMBD001-ALL	CVS-MPP-001A,B (CHI PUMP) FAIL TO START (CCF)	2.0E-04	3.2E-03	1.7E+01
9	RWSCF4SUPR001-ALL	SIS-SST-001A,B,C,D (ESS/CS STRAINER) PLUG DURING OPERATION (CCF)	9.7E-06	2.1E-03	2.2E+02
10	HPICF4PMAD001-234	SIS-MPP-001A,C,D (SI PUMP) FAIL TO START (CCF)	9.5E-06	2.0E-03	2.1E+02

Table 19.1-74 Common Cause Failure RAW for Flood

Rank	Basic Event ID	Basic Event Description	Basic Event Probability	FV Importance	RAW
1	RTPBTSWCCF	BASIC SOFTWARE CCF	1.0E-07	1.5E-03	1.5E+04
2	SGNBTSWCCF2	GROUP-2 APPLICATION SOFTWARE CCF	1.0E-05	9.9E-03	9.9E+02
3	SGNBTHWCCF	DIGITAL I&C HARDWARE CCF	2.1E-06	1.8E-03	8.7E+02
4	EPSCF4CBSO52LC-ALL	EPS 52/LCA,B,C,D (BREAKER) SPURIOUS OPEN (CCF)	1.6E-07	1.0E-04	6.5E+02
5	EPSCF4CBSO52STH-ALL	EPS 52/STHA,B,C,D (BREAKER) SPURIOUS OPEN (CCF)	1.6E-07	1.0E-04	6.5E+02
6	EPSCF4CBSO52STL-ALL	EPS 52/STLA,B,C,D (BREAKER) SPURIOUS OPEN (CCF)	1.6E-07	1.0E-04	6.5E+02
7	EPSCF4CBSO52STL-34	EPS 52/STLC,D (BREAKER) SPURIOUS OPEN (CCF)	3.4E-08	9.1E-06	2.7E+02
8	EPSCF4CBSO52STH-24	EPS 52/STHC,D (BREAKER) SPURIOUS OPEN (CCF)	3.4E-08	9.1E-06	2.7E+02
9	SWSCF4PMYR-FF	EWS-MPP-001A,B,C,D (A,B,C,D-ESW PUMP) FAIL TO RUN (CCF)	1.2E-08	3.1E-06	2.6E+02
10	HPICF4PMAD001-ALL	SIS-MPP-001A,B,C,D (SI PUMP) FAIL TO START (CCF)	1.1E-04	2.5E-02	2.2E+02

Table 19.1-75 Human Error FV Importance for Flood

Rank	Basic Event ID	Basic Event Description	Basic Event Probability	FV Importance	RAW
1	EFWOO01006AB	(HE) FAIL TO CHANGEOVER EFW PIT	1.7E-02	7.9E-01	4.7E+01
2	HPIOO02FWBD-S	(HE) FAIL TO OPEN SAFETY DEPRESSURIZATION VALVE	2.6E-03	4.4E-01	1.7E+02
3	SGNOO01S	(HE) FAIL TO START SAFETY INJECTION PUMP BY DAS	5.7E-02	2.0E-01	4.3E+00
4	CHIOO01CHIB	(HE) FAIL TO START THE STANDBY CHARGING INJECTION PUMP B	2.6E-03	4.1E-02	1.7E+01
5	HPIOO02FWBD	(HE) FAIL TO OPEN SAFETY DEPRESSURIZATION VALVE AND START SAFETY INJECTION PUMP	3.8E-03	2.9E-02	8.7E+00
6	RSSOO01CSP	(HE) FAIL TO START CV SPRAY SYSTEM	5.0E-03	1.0E-02	3.0E+00
7	EPSOO02RDG	(HE) FAIL TO CONNECT THE ALTERNATE AC POWER SOURCE TO CLASS 1E BUS	2.1E-02	6.0E-03	1.3E+00
8	CWSOO01ISO	(HE) FAIL TO CLOSE CCWS TIE-LINE VALVE BETWEEN TRAINS	9.5E-02	4.2E-03	1.0E+00
9	NCCOO04014	(HE) NCC MISCALIBRATION OF CSS-PT-014	8.0E-04	3.8E-03	5.7E+00
10	EFWOO01014	(HE) FAIL TO OPEN EFW TIE-LINE VALVE BETWEEN TRAINS	2.6E-03	3.4E-03	2.3E+00

Table 19.1-76 Human Error RAW for Flood

Rank	Basic Event ID	Basic Event Description	Basic Event Probability	FV Importance	RAW
1	HPIOO02FWBD-S	(HE) FAIL TO OPEN SAFETY DEPRESSURIZATION VALVE	2.6E-03	4.4E-01	1.7E+02
2	EFWOO01006AB	(HE) FAIL TO CHANGEOVER EFW PIT	1.7E-02	7.9E-01	4.7E+01
3	CHIOO01CHIB	(HE) FAIL TO START THE STANDBY CHARGING INJECTION PUMP B	2.6E-03	4.1E-02	1.7E+01
4	HPIOO02FWBD	(HE) FAIL TO OPEN SAFETY DEPRESSURIZATION VALVE AND START SAFETY INJECTION PUMP	3.8E-03	2.9E-02	8.7E+00
5	NCCOO04014	(HE) NCC MISCALIBRATION OF CSS-PT-014	8.0E-04	3.8E-03	5.7E+00
6	SGNOO01S	(HE) FAIL TO START SAFETY INJECTION PUMP BY DAS	5.7E-02	2.0E-01	4.3E+00
7	RSSOO01CSP	(HE) FAIL TO START CV SPRAY SYSTEM	5.0E-03	1.0E-02	3.0E+00
8	SGNOO04ICVR12	(HE) MISCALIBRATION OF C/V PRESSURE SENSORS A,B,C,D	6.7E-05	1.2E-04	2.8E+00
9	EFWOO01014	(HE) FAIL TO OPEN EFW TIE-LINE VALVE BETWEEN TRAINS	2.6E-03	3.4E-03	2.3E+00
10	EFWOO04LBBB	(HE) EFS MISCALIBRATION OF EFS-LT-070 , 071	2.2E-04	1.1E-04	1.5E+00

Table 19.1-77 Hardware Single Failure FV Importance for Flood

Rank	Basic Event ID	Basic Event Description	Basic Event Probability	FV Importance	RAW
1	RCP----SEAL	RCP SEAL LOCA	1.0E+00	1.0E-01	1.0E+00
2	HPITMPI001C	SIS-MPP-001C (C-SI PUMP) TEST & MAINTENANCE	4.0E-03	4.3E-02	1.2E+01
3	RTPDASF	DAS FAILURE	1.0E-02	3.5E-02	4.5E+00
4	OPSLOOP	CONSEQUENTIAL LOOP GIVEN A REACTOR TRIP	5.3E-03	3.5E-02	7.5E+00
5	SWSTMPE001D	EWS-MPP-001D (D-ESW PUMP) TEST & MAINTENANCE	1.2E-02	3.4E-02	3.8E+00
6	EFWXVOD006B	EFS-VLV-006B FAIL TO OPEN	7.0E-04	3.2E-02	4.6E+01
7	EFWXVCD007B	EFS-VLV-007B FAIL TO CLOSE	7.0E-04	3.2E-02	4.6E+01
8	CHIPMBD001B-R	CVS-MPP-001B (B-CHI PUMP) FAIL TO RE-START	1.8E-03	2.8E-02	1.7E+01
9	RTPNWIFRT5001D2	RPS-D GROUP-2 NETWORK I/F CARD FOR UNIT BUS RT5001D2 FAILURE	5.2E-03	2.7E-02	6.1E+00
10	RTPNWIFRT5002D2	RPS-D GROUP-2 NETWORK I/F CARD FOR SAFETY BUS RT5002D2 FAILURE	5.2E-03	2.7E-02	6.1E+00

Table 19.1-78 Hardware Single Failure RAW for Flood

Rank	Basic Event ID	Basic Event Description	Basic Event Probability	FV Importance	RAW
1	EPSBSFFMVCC	C-CLASS 1E MOV 480V MCC FAILURE	5.8E-06	1.8E-03	3.1E+02
2	RWSXVEL001	RWS-VLV-001 EXTERNAL LEAK LARGE	7.2E-08	1.2E-05	1.7E+02
3	RWSXVEL024	RWS-VLV-024 EXTERNAL LEAK LARGE	7.2E-08	1.2E-05	1.7E+02
4	RWSCVEL023	RWS-VLV-023 EXTERNAL LEAK LARGE	4.8E-08	8.2E-06	1.7E+02
5	RWSMVEL002	RWS-MOV-002 EXTERNAL LEAK LARGE	2.4E-08	4.1E-06	1.7E+02
6	RWSPNELPIPE2	RWS PIPING BETWEEN RWSP AND RWS-VLV-002 EXTERNAL LEAK LARGE	6.0E-10	1.0E-07	1.7E+02
7	RWSPNELPIPE1	RWS PIPING BETWEEN RWSP AND RWS-VLV-023 EXTERNAL LEAK LARGE	6.0E-10	1.0E-07	1.7E+02
8	EPSBSFFMVCD	D-CLASS 1E MOV 480V MCC1 FAILURE	5.8E-06	9.2E-04	1.6E+02
9	RWSTNEL001	RWS-MCP-001 (RWSP) EXTERNAL LEAK LARGE	4.8E-08	7.0E-06	1.5E+02
10	HPIMVEL001A	SIS-MOV-001A EXTERNAL LEAK LARGE	2.4E-08	2.9E-06	1.2E+02

Table 19.1-79 Deleted

Table 19.1-80 Deleted

Table 19.1-81 Disposition of Plant Operating States for LPSD PRA (Sheet 1 of 2)

POS	Description	POS modeled	Reason for model exclusion
1	Low power operation	No	This POS is a low power shutdown state and ECCS actuation signal is available. Further, all components will not be planned to be maintenance in this POS. Therefore, the risk of this POS is included in full power PRA
2	Hot standby condition	No	This POS is a hot standby state before RHR cooling and ECCS actuation signal is available. Further, all components will not be planned to be maintenance in this POS. Therefore, the risk of this POS is included in full power PRA.
3	RHR cooling (RCS full)	Yes	N/A
4	RHR cooling (mid-loop operation)	Yes	N/A
5	Refueling cavity is filled with water (refueling)	No	This POS is the state that refueling cavity is filled with water. Since there is large inventory water in the cavity, there would be sufficient time by core exposure and operator action will be more reliable. CDF during this POS is considered negligible.
6	No fuel in the core, or the core is partially offloaded.	No	This POS is the state at which there is either no fuel in the reactor core or the fuel is partially offloaded. For refueling and examination of the fuel, the fuel is transported from the RV to the spent fuel pit, or temporarily stored in the containment racks during this POS. This state is excluded from the analysis because there is either no fuel in the reactor, or if the fuel is partially offloaded, there is considerable time before the reactor core is exposed given a loss of decay heat removal event. The end of this POS is defined as the time at which fuel is fully loaded into the reactor core.
7	Refueling cavity is filled with water (refueling)	No	This POS is the state that refueling cavity is filled with water. Since there is large inventory in the cavity, there would be sufficient time by core exposure and operator action will be more reliable. CDF during this POS is considered negligible.
8	RHR cooling (mid-loop operation)	Yes	N/A
9	RHR cooling (RCS full)	Yes	N/A

Table 19.1-81 Disposition of Plant Operating States for LPSD PRA (Sheet 2 of 2)

POS	Description	POS modeled	Reason for model exclusion
10	RCS leakage test (RHR isolated)	No	POS 10: This POS is the RCS leakage test state. Since the RCS pressure is high and the RHRS is isolated from the RCS, initiating events that occur in RHRS are excluded. Since the risk in this POS will be smaller compared to other POS, CDF during this POS is considered negligible.
11	RHR cooling (RCS full)	Yes	N/A
12	Hot standby condition	No	This POS is a hot standby state before heatup, and ECCS actuation signal is already available. Further, all components will not be planned to be maintenance in this POS. Therefore, the risk of this POS is included in full power PRA
13	Low power operation	No	This POS is a low power shutdown state, and ECCS actuation signal is already available. Further, all components will not be planned to be maintenance in this POS. Therefore, the risk of this POS is included in full power PRA.

Table 19.1-82 Duration Time of Each POS for LPSD PRA

Analysis Case	Plant Configuration		Time [Hour]	
	from	to	Duration	After shutdown
1	Power operation	Insertion of control rods	3	0
2	Insertion of control rods	RHR connection	9	3
3	RHR connection	Initiation of RCS draining	24	12
4-1	Initiation of RCS draining	Opening the SG manhole	24	36
4-2	Opening the SG manhole	Installation of SG nozzle lid	12	60
4-3	Installation of SG nozzle lid	Cavity full	36	72
5	Initiation of fuel offload	Fuel movement ends	72	108
6	Fuel movement ends	Initiation of fuel load	168	180
7	Initiation of fuel load	Fuel movement ends	72	348
8-1	Cavity full	Removal of the SG nozzle lid	60	420
8-2	Removal of the SG nozzle lid	Installation of the SG manhole	12	480
8-3	Installation of the SG manhole	RCS full	24	492
9	RCS full	Initiation of the RCS leakage test	8.0	516
10	Initiation of the RCS leakage test	End of the RCS leakage test	16.0	524
11	End of the RCS leakage test	Isolation of RHR	33.0	540
12	Isolation of RHR	Critical state of the reactor	38.0	573
13	Critical state of the reactor	Power operation (for start-up)	3.0	611
		Total time	614	
		Total days	25.6	

Highlighted POSs: Scope of LPSD PRA

Table 19.1-83 Planned Maintenance Schedule for LPSD PRA

System \ POS	(1) Low power operation	(2) Hot standby	(3) Hot and cold shutdown (RCS is filled with coolant)	(4)-1 Cold shutdown (Mid-loop operation) (RCS closed)	(4)-2 Cold shutdown (Mid-loop operation) (RCS opened)	(4)-3 Cold shutdown (Mid-loop operation) (SG isolated)	(5) Refueling cavity is filled with water	(6) No fuels in the core	(7) Refueling cavity is filled with water	(8)-1 Cold shutdown (Mid-loop operation) (SG isolated)	(8)-2 Cold shutdown (Mid-loop operation) (RCS opened)	(8)-3 Cold shutdown (Mid-loop operation) (RCS closed)	(9) Cold shutdown (RCS is filled with coolant)	(10) RCS leakage test (RHRS isolated from RCS)	(11) Cold and hot shutdown (RCS is filled with coolant)	(12) Hot standby	(13) Low power operation
A Class 1E 6.9kV bus	N/A	N/A	△	△	△	△	N/A	N/A	N/A	△	△	△	△	N/A	△	N/A	N/A
B Class 1E 6.9kV bus	N/A	N/A	△	△	△	△	N/A	N/A	N/A	△	△	△	△	N/A	△	N/A	N/A
C Class 1E 6.9kV bus	N/A	N/A	△	△	△	△	N/A	N/A	N/A	△	△	△	△	N/A	△	N/A	N/A
D Class 1E 6.9kV bus	N/A	N/A	△	△	△	△	N/A	N/A	N/A	△	△	△	△	N/A	△	N/A	N/A
A Class 1E 480V load center bus	N/A	N/A	△	△	△	△	N/A	N/A	N/A	△	△	△	△	N/A	△	N/A	N/A
B Class 1E 480V load center bus	N/A	N/A	△	△	△	△	N/A	N/A	N/A	△	△	△	△	N/A	△	N/A	N/A
C Class 1E 480V load center bus	N/A	N/A	△	△	△	△	N/A	N/A	N/A	△	△	△	△	N/A	△	N/A	N/A
D Class 1E 480V load center bus	N/A	N/A	△	△	△	△	N/A	N/A	N/A	△	△	△	△	N/A	△	N/A	N/A
A Class 1E 480V motor control center bus	N/A	N/A	△	△	△	△	N/A	N/A	N/A	△	△	△	△	N/A	△	N/A	N/A
B Class 1E 480V motor control center bus	N/A	N/A	△	△	△	△	N/A	N/A	N/A	△	△	△	△	N/A	△	N/A	N/A
C Class 1E 480V motor control center bus	N/A	N/A	△	△	△	△	N/A	N/A	N/A	△	△	△	△	N/A	△	N/A	N/A
D Class 1E 480V motor control center bus	N/A	N/A	△	△	△	△	N/A	N/A	N/A	△	△	△	△	N/A	△	N/A	N/A
Offsite power main transformer	N/A	N/A	△	△	△	△	N/A	N/A	N/A	△	△	△	△	N/A	△	N/A	N/A
Offsite power reserve transformer	N/A	N/A	△	△	△	△	N/A	N/A	N/A	△	△	△	△	N/A	△	N/A	N/A
A Class 1E gas turbine generator	N/A	N/A	△	△	△	△	N/A	N/A	N/A	△	△	△	△	N/A	△	N/A	N/A
B Class 1E gas turbine generator	N/A	N/A	△	△	△	△	N/A	N/A	N/A	△	△	△	△	N/A	△	N/A	N/A
C Class 1E gas turbine generator	N/A	N/A	△	△	△	△	N/A	N/A	N/A	△	△	△	△	N/A	△	N/A	N/A
D Class 1E gas turbine generator	N/A	N/A	△	△	△	△	N/A	N/A	N/A	×	×	×	×	N/A	△	N/A	N/A
A essential service water pump	N/A	N/A	○	△	△	△	N/A	N/A	N/A	○	○	○	○	N/A	○	N/A	N/A
B essential service water pump	N/A	N/A	○	○	○	○	N/A	N/A	N/A	○	○	○	○	N/A	○	N/A	N/A
C essential service water pump	N/A	N/A	○	○	○	○	N/A	N/A	N/A	○	△	△	△	N/A	○	N/A	N/A
D essential service water pump	N/A	N/A	○	○	○	○	N/A	N/A	N/A	△	△	△	△	N/A	○	N/A	N/A
A essential service water header	N/A	N/A	○	△	△	△	N/A	N/A	N/A	○	○	○	○	N/A	○	N/A	N/A
B essential service water header	N/A	N/A	○	○	○	○	N/A	N/A	N/A	○	○	○	○	N/A	○	N/A	N/A
C essential service water header	N/A	N/A	○	○	○	○	N/A	N/A	N/A	○	△	△	△	N/A	○	N/A	N/A
D essential service water header	N/A	N/A	○	○	○	○	N/A	N/A	N/A	△	△	△	△	N/A	○	N/A	N/A
A component cooling water pump	N/A	N/A	○	△	△	△	N/A	N/A	N/A	○	○	○	○	N/A	○	N/A	N/A
B component cooling water pump	N/A	N/A	○	○	○	○	N/A	N/A	N/A	○	○	○	○	N/A	○	N/A	N/A
C component cooling water pump	N/A	N/A	○	○	○	○	N/A	N/A	N/A	○	△	△	△	N/A	○	N/A	N/A
D component cooling water pump	N/A	N/A	○	○	○	○	N/A	N/A	N/A	×	△	△	△	N/A	○	N/A	N/A
A component cooling water header	N/A	N/A	○	△	△	△	N/A	N/A	N/A	○	○	○	○	N/A	○	N/A	N/A
B component cooling water header	N/A	N/A	○	○	○	○	N/A	N/A	N/A	○	○	○	○	N/A	○	N/A	N/A
C component cooling water header	N/A	N/A	○	○	○	○	N/A	N/A	N/A	○	△	△	△	N/A	○	N/A	N/A
D component cooling water header	N/A	N/A	○	○	○	○	N/A	N/A	N/A	×	△	△	△	N/A	○	N/A	N/A
A CS/RHR pump	N/A	N/A	○	△	△	△	N/A	N/A	N/A	○	○	○	○	N/A	○	N/A	N/A
B CS/RHR pump	N/A	N/A	○	△	△	△	N/A	N/A	N/A	○	○	○	○	N/A	○	N/A	N/A
C CS/RHR pump	N/A	N/A	○	○	○	○	N/A	N/A	N/A	△	△	△	△	N/A	○	N/A	N/A
D CS/RHR pump	N/A	N/A	○	○	○	○	N/A	N/A	N/A	×	△	△	△	N/A	○	N/A	N/A
A Safety injection pump	N/A	N/A	×	×	×	×	N/A	N/A	N/A	△	△	△	△	N/A	△	N/A	N/A
B Safety injection pump	N/A	N/A	△	△	△	△	N/A	N/A	N/A	×	×	×	×	N/A	×	N/A	N/A
C Safety injection pump	N/A	N/A	×	×	×	×	N/A	N/A	N/A	△	△	△	△	N/A	△	N/A	N/A
D Safety injection pump	N/A	N/A	△	△	△	△	N/A	N/A	N/A	×	×	×	×	N/A	×	N/A	N/A
A Charging pump	N/A	N/A	×	×	×	×	N/A	N/A	N/A	△	○	○	○	N/A	○	N/A	N/A
B Charging pump	N/A	N/A	○	○	○	○	N/A	N/A	N/A	×	×	×	×	N/A	×	N/A	N/A
B Motor-driven emergency feed water pump	N/A	N/A	×	×	×	×	N/A	N/A	N/A	×	×	△	△	N/A	△	N/A	N/A
C Motor-driven emergency feed water pump	N/A	N/A	△	△	△	△	N/A	N/A	N/A	△	△	×	×	N/A	×	N/A	N/A
A main steam relief valve	N/A	N/A	×	×	×	×	N/A	N/A	N/A	△	△	△	△	N/A	△	N/A	N/A
B main steam relief valve	N/A	N/A	×	×	×	×	N/A	N/A	N/A	△	△	△	△	N/A	△	N/A	N/A
C main steam relief valve	N/A	N/A	△	△	×	×	N/A	N/A	N/A	×	×	△	△	N/A	△	N/A	N/A
D main steam relief valve	N/A	N/A	△	△	×	×	N/A	N/A	N/A	×	×	△	△	N/A	△	N/A	N/A
RWSP	N/A	N/A	△	△	△	△	N/A	N/A	N/A	△	△	△	△	N/A	△	N/A	N/A
RWSAT	N/A	N/A	△	△	△	△	N/A	N/A	N/A	△	△	△	△	N/A	△	N/A	N/A

○ : Run
△ : Standby
× : Outage
N/A : Not applicable

Table 19.1-84 Deleted

Table 19.1-85 Success Criteria of POS 8-1 for LPSD PRA (Example) (Sheet 1 of 4)

Success Criteria of High Head Injection

Initiating event identifier	Except loss of CCW/essential service water	Loss of CCW/essential service water
Success criteria	SI pumps 1 of 2	unavailable
	Pump A: standby Pump B: outage Pump C: standby Pump D: outage	Pump A: standby (unavailable) Pump B: outage Pump C: standby (unavailable) Pump D: outage
Mission time	24 hours	None
Operator actions	Manual starting of ECCS actuation signal	None

Success Criteria of RHRS

Initiating event identifier	Except loss of offsite power	Loss of offsite power (ac power recovery)
Success criteria	CS/RHR pump C	CS/RHR pumps 1 of 3
	Pump A: run (unavailable) Pump B: run (unavailable) Pump C: standby Pump D: outage	Pump A: run (need to restart) Pump B: run (need to restart) Pump C: standby Pump D: outage
Mission time	24 hours	24 hours
Operator actions	Manual starting of ECCS actuation and containment spray actuation signals	Manual starting of ECCS actuation and containment spray actuation signals

Success Criteria of CVCS

Initiating event identifier	All (RCS makeup)	ALL (Injection to the RCS)
Success criteria	Charging pump 1 of 1	Charging pumps 1 of 1
	Pump A: standby Pump B: outage	Pump A: standby Pump B: outage Needs RWSAT makeup
Mission time	24 hours	24 hours
Operator actions	Manual starting of Charging pump.	Manual starting of Charging pump. RWSAT makeup

Table 19.1-85 Success Criteria of POS 8-1 for LPSD PRA (Example) (Sheet 2 of 4)

Success Criteria of CCWS

Initiating event identifier	Except loss of offsite power and loss of CCW/essential service water	
Success criteria	(A, B sub-train) CCW pumps 1 of 2	(C, D sub-train) CCW pump C
	Pump A: run Pump B: run	Pump C: run Pump D: outage
Mission time	24 hours	24 hours
Operator actions	None	None
Initiating event identifier	Loss of offsite power	
Success criteria	(A, B sub-train) CCW pumps 1 of 2	(C, D sub-train) CCW pump C
	Pump A: run (need to restart) Pump B: run (need to restart)	Pump C: run (need to restart) Pump D: outage
Mission time	24 hours	24 hours
Operator actions	Manual starting of containment spray actuation signal	Manual starting of containment spray actuation signal
Initiating event identifier	Loss of CCW/essential service water	
Success criteria	Unavailable	
	Pump A: run (unavailable) Pump B: run (unavailable) Pump C: run (unavailable) Pump D: outage	
Mission time	None	
Operator actions	None	

Table 19.1-85 Success Criteria of POS 8-1 for LPSD PRA (Example) (Sheet 3 of 4)

Success Criteria of ESWS

Initiating event identifier	Except loss of offsite power and loss of CCW/essential service water	
Success criteria	(A, B, C sub-train) ESW 1 pump/train	(D sub-train) ESW 1 pump/train
	Pump A: run Pump B: run Pump C: run	Pump D: standby
Mission time	24 hours	-
Operator actions	Change of strainer line by manual operation (if necessary)	-
Initiating event identifier	Loss of offsite power	
Success criteria	(A, B, C sub-train) ESW 1 pump/train	(D sub-train) ESW 1 pump/train
	Pump A: run (need to restart) Pump B: run (need to restart) Pump C: run (need to restart)	Pump D: standby
Mission time	24 hours	-
Operator actions	Change of strainer line by manual operation (if necessary)	-
Initiating event identifier	Loss of CCW/essential service water	
Success criteria	Unavailable	
	Pump A: run (unavailable) Pump B: run (unavailable) Pump C: run (unavailable) Pump D: standby	
Mission time	-	
Operator actions	-	

Table 19.1-85 Success Criteria of POS 8-1 for LPSD PRA (Example) (Sheet 4 of 4)

Success Criteria of Emergency Power Supply System

Initiating event identifier	Except loss of offsite power	
Success criteria	(A sub-train) Offsite power or Emergency power source	(B sub-train) Offsite power or Emergency power source
	Offsite power: available GT A: standby	Offsite power: available GT B: standby
Mission time	24 hours	24 hours
Operator actions	None	None
Success criteria	(C sub-train) Offsite power or Emergency power source	(D sub-train) Offsite power
	Offsite power: available GT C: standby	Offsite power: available GT D: outage
Mission time	24 hours	24 hours
Operator actions	None	None
Initiating event identifier	Loss of offsite power	
Success criteria	(A sub-train) Emergency power source	(B sub-train) Emergency power source
	Offsite power: unavailable GT A: standby	Offsite power: unavailable GT B: standby
Mission time	24 hours	24 hours
Operator actions	None	None
Success criteria	(C sub-train) Emergency power source	(D sub-train) Unavailable
	Offsite power: unavailable GT C: standby	Offsite power: unavailable GT D: outage
Mission time	24 hours	24 hours
Operator actions	None	None

Table 19.1-86 Summary of Front-line System Failure Probabilities for LPSD PRA (Sheet 1 of 2)

Fault Tree Name	Fault Tree Description	Fault Tree Probability
Injection by CVCS using alternate component cooling (SC)		
ACW (POS4-3)	FAILURE OF INJECTION BY CHARGING PUMP COOLED BY ACW (LOCS) (POS4-3)	2.9E-02
ACW (POS8-1)	FAILURE OF INJECTION BY CHARGING PUMP COOLED BY ACW (LOCS) (POS8-1)	2.9E-02
ACW-LOOP (POS4-3)	FAILURE OF INJECTION BY CHARGING PUMP COOLED BY ACW (LOOP) (POS4-3)	3.2E-02
ACW-LOOP (POS8-1)	FAILURE OF INJECTION BY CHARGING PUMP COOLED BY ACW (LOOP) (POS8-1)	3.2E-02
Charging injection system (MC, CV)		
CHI-A (POS4-3)	FAILURE OF RCS MAKEUP BY CHARGING PUMP (LOCA, OVDR) (POS4-3)	9.3E-04
CHI-A (POS8-1)	FAILURE OF RCS MAKEUP BY CHARGING PUMP (LOCA, OVDR) (POS8-1)	5.5E-03
CHI-B (POS4-3)	FAILURE OF INJECTION BY CHARGING PUMP (LOCA, OVDR) (POS4-3)	2.1E-02
CHI-B (POS8-1)	FAILURE OF INJECTION BY CHARGING PUMP (LOCA, OVDR) (POS8-1)	2.5E-02
CHI-C (POS4-3)	FAILURE OF INJECTION BY CHARGING PUMP (LOCA, OVDR, LORH) (POS4-3)	2.1E-02
CHI-C (POS8-1)	FAILURE OF INJECTION BY CHARGING PUMP (LOCA, OVDR, LORH) (POS8-1)	2.4E-02
CHI-D (POS4-3)	FAILURE OF INJECTION BY CHARGING PUMP (LOOP) (POS4-3)	2.5E-02
CHI-D (POS8-1)	FAILURE OF INJECTION BY CHARGING PUMP (LOOP) (POS8-1)	2.7E-02
High head injection system (SI)		
HPI2 (POS4-3)	FAILURE OF INJECTION BY SAFETY INJECTION PUMP (LOCA,OVDR,FLML,LORH) (POS4-3)	5.1E-03
HPI2 (POS8-1)	FAILURE OF INJECTION BY SAFETY INJECTION PUMP (LOCA,OVDR,FLML,LORH) (POS8-1)	5.1E-03
HPI2-LOOP (POS4-3)	FAILURE OF INJECTION BY SAFETY INJECTION PUMP (LOOP) (POS4-3)	9.5E-03
HPI2-LOOP (POS8-1)	FAILURE OF INJECTION BY SAFETY INJECTION PUMP (LOOP) (POS8-1)	5.7E-03
Isolation of CS/RHR hot leg suction valves (LOA)		
LOA (POS4-3)	FAILURE OF MANUAL ISOLATION OF THE LEAKAGE TRAIN OF RHR SYSTEM (POS4-3)	2.6E-03
LOA (POS8-1)	FAILURE OF MANUAL ISOLATION OF THE LEAKAGE TRAIN OF RHR SYSTEM (POS8-1)	2.6E-03

Table 19.1-86 Summary of Front-line System Failure Probabilities for LPSD PRA (Sheet 2 of 2)

Fault Tree Name	Fault Tree Description	Fault Tree Probability
Isolation of low pressure letdown line (LOB)		
LOB (POS4-3)	FAILURE OF MANUAL ISOLATION OF LOW-PRESSURE LETDOWN LINE (OVDR, FLML) (POS4-3)	5.0E-03
LOB (POS8-1)	FAILURE OF MANUAL ISOLATION OF LOW-PRESSURE LETDOWN LINE (OVDR, FLML) (POS8-1)	5.0E-03
Power supply by Class 1E GTG A, B, C, D (GT)		
MGT (POS4-3)	FAILURE OF POWER SUPPLY BY CLASS 1E GTG A,B,C (POS4-3)	1.5E-03
MGT (POS8-1)	FAILURE OF POWER SUPPLY BY CLASS 1E GTG A,B,C (POS8-1)	1.8E-03
CCW/essential service water restart (PR)		
PRS-00 (POS4-3)	FAILURE OF CCW/ESW PUMP RE-START (LOOP) (POS4-3)	9.9E-05
PRS-00 (POS8-1)	FAILURE OF CCW/ESW PUMP RE-START (LOOP) (POS8-1)	1.3E-04
Residual heat removal system (RH)		
RSS-00 (POS4-3)	FAILURE OF HEAT REMOVAL BY STANDBY CS/ RHR PUMPS (LOCA,OVDR, FLML) (POS4-3)	4.5E-03
RSS-00 (POS8-1)	FAILURE OF HEAT REMOVAL BY STANDBY CS/ RHR PUMPS (LOCA,OVDR, FLML) (POS8-1)	1.3E-02
RSS-00-L (POS4-3)	FAILURE OF HEAT REMOVAL BY CS/RHR PUMPS (LOOP) (POS4-3)	2.7E-03
RSS-00-L (POS8-1)	FAILURE OF HEAT REMOVAL BY CS/RHR PUMPS (LOOP) (POS8-1)	2.8E-03
Power supply by AAC		
SGT (POS4-3)	FAILURE OF POWER SUPPLY BY AAC (POS4-3)	2.4E-02
SGT (POS8-1)	FAILURE OF POWER SUPPLY BY AAC (POS8-1)	5.4E-02

Table 19.1-87 Summary of Support System Failure Probabilities for LPSD PRA (Sheet 1 of 7)

Fault Tree Name	Fault Tree Description	Fault Tree Probability
Class 1E 480V load center		
EPS-480A (POS4-3)	EPS A CLASS 1E 480V LOAD CENTER FAILURE (POS4-3)	2.8E-05
EPS-480A (POS8-1)	EPS A CLASS 1E 480V LOAD CENTER FAILURE (POS8-1)	2.8E-05
EPS-480A(LOOP) (4-3)	EPS A CLASS 1E 480V LOAD CENTER FAILURE (LOOP) (POS4-3)	2.5E-03
EPS-480A(LOOP) (8-1)	EPS A CLASS 1E 480V LOAD CENTER FAILURE (LOOP) (POS8-1)	2.5E-03
EPS-480B (POS4-3)	EPS B CLASS 1E 480V LOAD CENTER FAILURE (POS4-3)	4.4E-05
EPS-480B (POS8-1)	EPS B CLASS 1E 480V LOAD CENTER FAILURE (POS8-1)	4.4E-05
EPS-480B(LOOP) (4-3)	EPS B CLASS 1E 480V LOAD CENTER FAILURE (LOOP) (POS4-3)	3.2E-02
EPS-480B(LOOP) (8-1)	EPS B CLASS 1E 480V LOAD CENTER FAILURE (LOOP) (POS8-1)	3.2E-02
EPS-480C (POS4-3)	EPS C CLASS 1E 480V LOAD CENTER FAILURE (POS4-3)	4.4E-05
EPS-480C (POS8-1)	EPS C CLASS 1E 480V LOAD CENTER FAILURE (POS8-1)	4.4E-05
EPS-480C(LOOP) (4-3)	EPS C CLASS 1E 480V LOAD CENTER FAILURE (LOOP) (POS4-3)	3.2E-02
EPS-480C(LOOP) (8-1)	EPS C CLASS 1E 480V LOAD CENTER FAILURE (LOOP) (POS8-1)	3.2E-02
EPS-480D (POS4-3)	EPS D CLASS 1E 480V LOAD CENTER FAILURE (POS4-3)	2.8E-05
EPS-480D (POS8-1)	EPS D CLASS 1E 480V LOAD CENTER FAILURE (POS8-1)	5.5E-05
EPS-480D(LOOP) (4-3)	EPS D CLASS 1E 480V LOAD CENTER FAILURE (LOOP) (POS4-3)	2.5E-03
EPS-480D(LOOP) (8-1)	EPS D CLASS 1E 480V LOAD CENTER FAILURE (LOOP) (POS8-1)	5.4E-02

Table 19.1-87 Summary of Support System Failure Probabilities for LPSD PRA (Sheet 2 of 7)

Fault Tree Name	Fault Tree Description	Fault Tree Probability
Class 1E 6.9kV switchgear		
EPS-69KA (POS4-3)	EPS A CLASS 1E 6.9KV SWITCHGEAR FAILURE (POS4-3)	7.1E-06
EPS-69KA (POS8-1)	EPS A CLASS 1E 6.9KV SWITCHGEAR FAILURE (POS8-1)	7.1E-06
EPS-69KA(LOOP) (4-3)	EPS A CLASS 1E 6.9KV SWITCHGEAR FAILURE (LOOP) (POS4-3)	2.4E-03
EPS-69KA(LOOP) (8-1)	EPS A CLASS 1E 6.9KV SWITCHGEAR FAILURE (LOOP) (POS8-1)	2.4E-03
EPS-69KB (POS4-3)	EPS B CLASS 1E 6.9KV SWITCHGEAR FAILURE (POS4-3)	2.3E-05
EPS-69KB (POS8-1)	EPS B CLASS 1E 6.9KV SWITCHGEAR FAILURE (POS8-1)	2.3E-05
EPS-69KB(LOOP) (4-3)	EPS B CLASS 1E 6.9KV SWITCHGEAR FAILURE (LOOP) (POS4-3)	3.2E-02
EPS-69KB(LOOP) (8-1)	EPS B CLASS 1E 6.9KV SWITCHGEAR FAILURE (LOOP) (POS8-1)	3.2E-02
EPS-69KC (POS4-3)	EPS C CLASS 1E 6.9KV SWITCHGEAR FAILURE (POS4-3)	2.3E-05
EPS-69KC (POS8-1)	EPS C CLASS 1E 6.9KV SWITCHGEAR FAILURE (POS8-1)	2.3E-05
EPS-69KC(LOOP) (4-3)	EPS C CLASS 1E 6.9KV SWITCHGEAR FAILURE (LOOP) (POS4-3)	3.2E-02
EPS-69KC(LOOP) (8-1)	EPS C CLASS 1E 6.9KV SWITCHGEAR FAILURE (LOOP) (POS8-1)	3.2E-02
EPS-69KD (POS4-3)	EPS D CLASS 1E 6.9KV SWITCHGEAR FAILURE (POS4-3)	7.1E-06
EPS-69KD (POS8-1)	EPS D CLASS 1E 6.9KV SWITCHGEAR FAILURE (POS8-1)	3.5E-05
EPS-69KD(LOOP) (4-3)	EPS D CLASS 1E 6.9KV SWITCHGEAR FAILURE (LOOP) (POS4-3)	2.4E-03
EPS-69KD(LOOP) (8-1)	EPS D CLASS 1E 6.9KV SWITCHGEAR FAILURE (LOOP) (POS8-1)	5.4E-02

Table 19.1-87 Summary of Support System Failure Probabilities for LPSD PRA (Sheet 3 of 7)

Fault Tree Name	Fault Tree Description	Fault Tree Probability
Class 1E 480V MCC		
EPS-MCA (POS4-3)	EPS A CLASS 1E 480V MCC FAILURE (POS4-3)	3.7E-05
EPS-MCA (POS8-1)	EPS A CLASS 1E 480V MCC FAILURE (POS8-1)	3.7E-05
EPS-MCA1 (POS4-3)	EPS A1 CLASS 1E 480V MCC FAILURE (POS4-3)	4.9E-05
EPS-MCA1 (POS8-1)	EPS A1 CLASS 1E 480V MCC FAILURE (POS8-1)	4.9E-05
EPS-MCA1(LOOP) (4-3)	EPS A1 CLASS 1E 480V MCC FAILURE (LOOP) (POS4-3)	2.5E-03
EPS-MCA1(LOOP) (8-1)	EPS A1 CLASS 1E 480V MCC FAILURE (LOOP) (POS8-1)	2.5E-03
EPS-MCB (LOOP) (4-3)	EPS B CLASS 1E 480V MCC FAILURE (LOOP) (POS4-3)	3.2E-02
EPS-MCB (LOOP) (8-1)	EPS B CLASS 1E 480V MCC FAILURE (LOOP) (POS8-1)	3.2E-02
EPS-MCB (POS4-3)	EPS B CLASS 1E 480V MCC FAILURE (POS4-3)	5.3E-05
EPS-MCB (POS8-1)	EPS B CLASS 1E 480V MCC FAILURE (POS8-1)	5.3E-05
EPS-MCC (LOOP) (4-3)	EPS C CLASS 1E 480V MCC FAILURE (LOOP) (POS4-3)	3.2E-02
EPS-MCC (LOOP) (8-1)	EPS C CLASS 1E 480V MCC FAILURE (LOOP) (POS8-1)	3.2E-02
EPS-MCC (POS4-3)	EPS C CLASS 1E 480V MCC FAILURE (POS4-3)	5.3E-05
EPS-MCC (POS8-1)	EPS C CLASS 1E 480V MCC FAILURE (POS8-1)	5.3E-05
EPS-MCD (LOOP) (4-3)	EPS D CLASS 1E 480V MCC FAILURE (LOOP) (POS4-3)	2.5E-03
EPS-MCD (LOOP) (8-1)	EPS D CLASS 1E 480V MCC FAILURE (LOOP) (POS8-1)	5.4E-02
EPS-MCD (POS4-3)	EPS D CLASS 1E 480V MCC FAILURE (POS4-3)	3.7E-05
EPS-MCD (POS8-1)	EPS D CLASS 1E 480V MCC FAILURE (POS8-1)	6.4E-05
EPS-MCD1 (POS4-3)	EPS D1 CLASS 1E 480V MCC FAILURE (POS4-3)	4.9E-05
EPS-MCD1 (POS8-1)	EPS D1 CLASS 1E 480V MCC FAILURE (POS8-1)	7.7E-05
EPS-MCD1(LOOP) (4-3)	EPS D1 CLASS 1E 480V MCC FAILURE (LOOP) (POS4-3)	2.5E-03
EPS-MCD1(LOOP) (8-1)	EPS D1 CLASS 1E 480V MCC FAILURE (LOOP) (POS8-1)	5.4E-02

Table 19.1-87 Summary of Support System Failure Probabilities for LPSD PRA (Sheet 4 of 7)

Fault Tree Name	Fault Tree Description	Fault Tree Probability
Class 1E dc switchboard		
EPS-SBA (POS4-3)	EPS A DC SWITCHBOARD FAILURE (POS4-3)	5.8E-06
EPS-SBA (POS8-1)	EPS A DC SWITCHBOARD FAILURE (POS8-1)	5.8E-06
EPS-SBA(LOOP) (4-3)	EPS A DC SWITCHBOARD FAILURE (LOOP) (POS4-3)	6.2E-06
EPS-SBA(LOOP) (8-1)	EPS A DC SWITCHBOARD FAILURE (LOOP) (POS8-1)	6.2E-06
EPS-SBB (POS4-3)	EPS B DC SWITCHBOARD FAILURE (POS4-3)	5.8E-06
EPS-SBB (POS8-1)	EPS B DC SWITCHBOARD FAILURE (POS8-1)	5.8E-06
EPS-SBB(LOOP) (4-3)	EPS B DC SWITCHBOARD FAILURE (LOOP) (POS4-3)	1.3E-05
EPS-SBB(LOOP) (8-1)	EPS B DC SWITCHBOARD FAILURE (LOOP) (POS8-1)	1.3E-05
EPS-SBC (POS4-3)	EPS C DC SWITCHBOARD FAILURE (POS4-3)	5.8E-06
EPS-SBC (POS8-1)	EPS C DC SWITCHBOARD FAILURE (POS8-1)	5.8E-06
EPS-SBC(LOOP) (4-3)	EPS C DC SWITCHBOARD FAILURE (LOOP) (POS4-3)	1.3E-05
EPS-SBC(LOOP) (8-1)	EPS C DC SWITCHBOARD FAILURE (LOOP) (POS8-1)	1.3E-05
EPS-SBD (POS4-3)	EPS D DC SWITCHBOARD FAILURE (POS4-3)	5.8E-06
EPS-SBD (POS8-1)	EPS D DC SWITCHBOARD FAILURE (POS8-1)	5.8E-06

Table 19.1-87 Summary of Support System Failure Probabilities for LPSD PRA (Sheet 5 of 7)

Fault Tree Name	Fault Tree Description	Fault Tree Probability
Class 1E I&C panelboard		
EPS-VITALA (POS4-3)	EPS A I&C PANELBOARD FAILURE (POS4-3)	5.8E-06
EPS-VITALA (POS8-1)	EPS A I&C PANELBOARD FAILURE (POS8-1)	5.8E-06
EPS-VITALA(LOOP) 4-3	EPS A I&C PANELBOARD FAILURE (LOOP) (POS4-3)	1.3E-05
EPS-VITALA(LOOP) 8-1	EPS A I&C PANELBOARD FAILURE (LOOP) (POS8-1)	1.3E-05
EPS-VITALB (POS4-3)	EPS B I&C PANELBOARD FAILURE (POS4-3)	5.8E-06
EPS-VITALB (POS8-1)	EPS B I&C PANELBOARD FAILURE (POS8-1)	5.8E-06
EPS-VITALB(LOOP) 4-3	EPS B I&C PANELBOARD FAILURE (LOOP) (POS4-3)	1.5E-04
EPS-VITALB(LOOP) 8-1	EPS B I&C PANELBOARD FAILURE (LOOP) (POS8-1)	1.5E-04
EPS-VITALC (POS4-3)	EPS C I&C PANELBOARD FAILURE (POS4-3)	5.8E-06
EPS-VITALC (POS8-1)	EPS C I&C PANELBOARD FAILURE (POS8-1)	5.8E-06
EPS-VITALC(LOOP) 4-3	EPS C I&C PANELBOARD FAILURE (LOOP) (POS4-3)	1.5E-04
EPS-VITALC(LOOP) 8-1	EPS C I&C PANELBOARD FAILURE (LOOP) (POS8-1)	1.5E-04
EPS-VITALD (POS4-3)	EPS D I&C PANELBOARD FAILURE (POS4-3)	5.8E-06
EPS-VITALD (POS8-1)	EPS D I&C PANELBOARD FAILURE (POS8-1)	5.8E-06
EPS-VITALD(LOOP) 4-3	EPS D I&C PANELBOARD FAILURE (LOOP) (POS4-3)	1.3E-05
EPS-VITALD(LOOP) 8-1	EPS D I&C PANELBOARD FAILURE (LOOP) (POS8-1)	1.3E-05

Table 19.1-87 Summary of Support System Failure Probabilities for LPSD PRA (Sheet 6 of 7)

Fault Tree Name	Fault Tree Description	Fault Tree Probability
Component cooling water system		
CWS-00A (POS4-3)	LOSS OF FUNCTION CCWS-A HEADER (EXCEPT LOOP) (POS4-3)	4.7E-03
CWS-00A (POS8-1)	LOSS OF FUNCTION CCWS-A HEADER (EXCEPT LOOP) (POS8-1)	5.6E-04
CWS-00A-L (POS4-3)	LOSS OF FUNCTION CCWS-A HEADER (LOOP) (POS4-3)	7.1E-03
CWS-00A-L (POS8-1)	LOSS OF FUNCTION CCWS-A HEADER (LOOP) (POS8-1)	7.1E-03
CWS-00A1 (POS4-3)	LOSS OF FUNCTION CCWS-A1 HEADER (EXCEPT LOOP) (POS4-3)	3.9E-05
CWS-00A1 (POS8-1)	LOSS OF FUNCTION CCWS-A1 HEADER (EXCEPT LOOP) (POS8-1)	3.7E-05
CWS-00A1-L (POS4-3)	LOSS OF FUNCTION CCWS-A1 HEADER (LOOP) (POS4-3)	7.2E-04
CWS-00A1-L (POS8-1)	LOSS OF FUNCTION CCWS-A1 HEADER (LOOP) (POS8-1)	7.0E-04
CWS-00B (POS4-3)	LOSS OF FUNCTION CCWS-B HEADER (EXCEPT LOOP) (POS4-3)	5.8E-04
CWS-00B (POS8-1)	LOSS OF FUNCTION CCWS-B HEADER (EXCEPT LOOP) (POS8-1)	5.8E-04
CWS-00B-L (POS4-3)	LOSS OF FUNCTION CCWS-B HEADER (LOOP) (POS4-3)	3.7E-02
CWS-00B-L (POS8-1)	LOSS OF FUNCTION CCWS-B HEADER (LOOP) (POS8-1)	3.7E-02
CWS-00C (POS4-3)	LOSS OF FUNCTION CCWS-C HEADER (EXCEPT LOOP) (POS4-3)	5.8E-04
CWS-00C (POS8-1)	LOSS OF FUNCTION CCWS-C HEADER (EXCEPT LOOP) (POS8-1)	5.8E-04
CWS-00C-L (POS4-3)	LOSS OF FUNCTION CCWS-C HEADER (LOOP) (POS4-3)	3.7E-02
CWS-00C-L (POS8-1)	LOSS OF FUNCTION CCWS-C HEADER (LOOP) (POS8-1)	3.5E-02
CWS-00C1 (POS4-3)	LOSS OF FUNCTION CCWS-C1 HEADER (EXCEPT LOOP) (POS4-3)	3.7E-05
CWS-00C1 (POS8-1)	LOSS OF FUNCTION CCWS-C1 HEADER (EXCEPT LOOP) (POS8-1)	5.9E-04
CWS-00C1-L (POS4-3)	LOSS OF FUNCTION CCWS-C1 HEADER (LOOP) (POS4-3)	7.2E-04
CWS-00C1-L (POS8-1)	LOSS OF FUNCTION CCWS-C1 HEADER (LOOP) (POS8-1)	3.5E-02
CWS-00D (POS4-3)	LOSS OF FUNCTION CCWS-D HEADER (EXCEPT LOOP) (POS4-3)	5.6E-04
CWS-00D-L (POS4-3)	LOSS OF FUNCTION CCWS-D HEADER (LOOP) (POS4-3)	7.1E-03

Table 19.1-87 Summary of Support System Failure Probabilities for LPSD PRA (Sheet 7 of 7)

Fault Tree Name	Fault Tree Description	Fault Tree Probability
Essential service water system		
SWS-00A (POS4-3)	ESWS TRAIN A FAILURE (EXCEPT LOOP) (POS4-3)	3.5E-03
SWS-00A (POS8-1)	ESWS TRAIN A FAILURE (EXCEPT LOOP) (POS8-1)	4.2E-04
SWS-00A-L (POS4-3)	ESWS TRAIN A FAILURE (LOOP) (POS4-3)	5.9E-03
SWS-00A-L (POS8-1)	ESWS TRAIN A FAILURE (LOOP) (POS8-1)	5.9E-03
SWS-00B (POS4-3)	ESWS TRAIN A FAILURE (EXCEPT LOOP) (POS4-3)	4.4E-04
SWS-00B (POS8-1)	ESWS TRAIN A FAILURE (EXCEPT LOOP) (POS8-1)	4.4E-04
SWS-00B-L (POS4-3)	ESWS TRAIN B FAILURE (LOOP) (POS4-3)	3.6E-02
SWS-00B-L (POS8-1)	ESWS TRAIN B FAILURE (LOOP) (POS8-1)	3.6E-02
SWS-00C (POS4-3)	ESWS TRAIN A FAILURE (EXCEPT LOOP) (POS4-3)	4.4E-04
SWS-00C (POS8-1)	ESWS TRAIN A FAILURE (EXCEPT LOOP) (POS8-1)	4.4E-04
SWS-00C-L (POS4-3)	ESWS TRAIN C FAILURE (LOOP) (POS4-3)	3.6E-02
SWS-00C-L (POS8-1)	ESWS TRAIN C FAILURE (LOOP) (POS8-1)	3.4E-02
SWS-00D (POS4-3)	ESWS TRAIN A FAILURE (EXCEPT LOOP) (POS4-3)	4.2E-04
SWS-01D-L (POS4-3)	ESWS TRAIN A FAILURE (EXCEPT LOOP) (POS4-3)	1.1E-03

Table 19.1-88 Frequency of Initiating Events for LPSD PRA

IE	Event description	IE_{POS3}	IE_{POS4-1}	IE_{POS4-2}	IE_{POS4-3}	IE_{POS8-1}	IE_{POS8-2}	IE_{POS8-3}	IE_{POS9}	IE_{POS11}	Reference
LOCA	Loss of coolant accident	6.5E-05	6.5E-05	3.2E-05	9.7E-05	1.6E-04	3.2E-05	6.5E-05	2.2E-05	8.9E-05	EPRI TR-1003113
OVDR	Loss of RHRS due to over-drain	N/A	3.7E-06	N/A	N/A	3.7E-06	N/A	N/A	N/A	N/A	Fault tree analysis and human reliability analysis
FLML	Loss of RHRS caused by failing to maintain water level	N/A	N/A	5.7E-07	5.7E-07	N/A	5.7E-07	5.7E-07	N/A	N/A	Fault tree analysis
LORH	Loss of RHRS caused by other failures	3.1E-06	5.5E-06	1.6E-06	4.7E-06	1.0E-05	1.6E-06	3.2E-06	1.1E-06	4.3E-06	Fault tree analysis
LOCS	Loss of CCW/ESW	1.0E-07	1.6E-07	9.6E-09	2.9E-08	2.8E-07	2.0E-08	3.9E-08	1.3E-08	1.4E-07	Fault tree analysis
LOOP	Loss of offsite power	2.7E-04	2.7E-04	1.3E-04	4.0E-04	6.7E-04	1.3E-04	2.7E-04	8.9E-05	3.7E-04	NUREG/CR-6890

N/A not applicable

Table 19.1-89 Core Damage Frequency for LPSD PRA

IE	Event description	POS3[2]	POS4-1[2]	POS4-2[2]	POS4-3[1]	POS8-1[1]	POS8-2[2]	POS8-3[2]	POS9[2]	POS11[2]	Total
LOCA	Loss of coolant accident	3.7E-09	2.6E-09	9.4E-10	6.01E-09	3.48E-08	1.0E-09	2.6E-09	8.8E-10	5.1E-09	5.8E-08
OVDR	Loss of RHRS due to over-drain	N/A	6.5E-10	N/A	N/A	1.78E-09	N/A	N/A	N/A	N/A	2.4E-09
FLML	Loss of RHRS caused by failing to maintain water level	N/A	N/A	3.2E-10	3.04E-09	N/A	3.2E-10	4.4E-10	N/A	N/A	4.1E-09
LORH	Loss of RHRS caused by other failures	2.3E-10	4.0E-10	2.9E-10	1.64E-09	3.76E-09	2.9E-10	2.3E-10	7.7E-11	3.2E-10	7.2E-09
LOCS	Loss of CCW/essential service water	3.0E-09	4.5E-09	5.5E-11	8.31E-10	8.08E-09	1.1E-10	1.1E-09	3.8E-10	4.1E-09	2.2E-08
LOOP	Loss of offsite power	6.6E-09	5.1E-09	3.7E-09	1.81E-08	3.20E-08	3.9E-09	6.2E-09	2.0E-09	8.4E-09	8.6E-08
TOTAL		1.3E-08	1.3E-08	5.3E-09	2.96E-08	8.05E-08	5.6E-09	1.1E-08	3.4E-09	1.8E-08	1.8E-07

N/A: not applicable

1: Based on detailed, quantitative evaluation

2: Based on simplified evaluation

Table 19.1-90 Dominant Sequences of POS 8-1 for LPSD PRA

No	Sequence ID	Sequence Name	Sequence Frequency (/ry)	Percent Contrib.	Percent Contrib.Total
1	LOCA 8-1 0010	01 LOCA: POS8-1-MC1-SG-SIA1-GI	2.5E-08	31.2%	31.2%
2	LOOP 8-1 0006	05 LOOP: POS8-1-RHB-SG-SIB-CVB-GI	1.7E-08	21.6%	52.8%
3	LOOP 8-1 0037	05 LOOP: POS8-1-GT-SP-AC	9.3E-09	11.6%	64.5%
4	LOCS 8-1 0003	04 LOCS: POS8-1-GI-SC1	8.1E-09	10.0%	74.5%
5	LOCA 8-1 0006	01 LOCA: POS8-1-RHA-SG-SIA1-CVA1-GI	5.9E-09	7.3%	81.8%
6	LOOP 8-1 0009	05 LOOP: POS8-1-PR-GI-SC2	4.2E-09	5.2%	87.0%
7	LOCA 8-1 0014	01 LOCA: POS8-1-LOA-SIA1-CVA1-GI	3.8E-09	4.8%	91.8%
8	LORH 8-1 0005	03 LORH: POS8-1-SG-SIA3-CVA3-GI	3.8E-09	4.7%	96.5%
9	OVDR 8-1 0010	02 OVDR: POS8-1-MC1-SG-SIA2-GI	1.3E-09	1.6%	98.1%
10	LOOP 8-1 0015	05 LOOP: POS8-1-GT-RHB-SG-SIB-CVB-GI	4.5E-10	0.6%	98.7%
11	OVDR 8-1 0014	02 OVDR: POS8-1-LOB-SIA2-CVA2-GI	3.2E-10	0.4%	99.1%
12	LOOP 8-1 0036	05 LOOP: POS8-1-GT-SP-PR-GI-SC2	3.2E-10	0.4%	99.5%
13	LOOP 8-1 0024	05 LOOP: POS8-1-GT-AC-RHB-SG-SIB-CVB-GI	1.5E-10	0.2%	99.7%
14	OVDR 8-1 0006	02 OVDR: POS8-1-RHA-SG-SIA2-CVA2-GI	1.3E-10	0.2%	99.8%
15	LOOP 8-1 0033	05 LOOP: POS8-1-GT-SP-RHB-SG-SIB-CVB-GI	8.6E-11	0.1%	99.9%
16	LOOP 8-1 0018	05 LOOP: POS8-1-GT-PR-GI-SC2	2.8E-11	0.0%	100.0%
17	LOOP 8-1 0027	05 LOOP: POS8-1-GT-AC-PR-GI-SC2	2.8E-11	0.0%	100.0%
TOTAL =			8.0E-08	100.0%	

Table 19.1-91 Dominant Cutsets of POS 8-1 for LPSD PRA (Sheet 1 of 10)

No	Cutsets freq.(/ry)	Percent	Cutsets	Frequency/ probability	Basic Event Description
1	2.3E-08	28.0	!LOCA8-1	1.6E-04	LOSS OF COOLANT ACCIDENT - POS8-1
			CHIOO02P	2.6E-03	(HE) FAIL TO START STANDBY CHARGING PUMP
			GI	1.0E+00	GUARANTEED FAILURE OF GRAVITY INJECTION
			HPIOO02S-DP2	5.5E-02	(HE) FAIL TO START STANDBY SAFETY INJECTION PUMP
			SG	1.0E+00	GUARANTEED FAILURE OF DECAY HEAT REMOVAL BY SG
2	1.5E-08	18.5	!LOOP8-1	6.7E-04	LOSS OF OFFSITE POWER - POS8-1
			CHIOO02P+RWS-DP3	1.6E-01	(HE) FAIL TO START STANDBY CHARGING PUMP AND REFILL RWSAT WATER FROM RWSP
			GI	1.0E+00	GUARANTEED FAILURE OF GRAVITY INJECTION
			HPIOO02S-DP2	5.5E-02	(HE) FAIL TO START STANDBY SAFETY INJECTION PUMP
			RSSOO02P	2.6E-03	(HE) FAIL TO RE-START THE RHR PUMPS WHEN THE LOOP EVENT OCCURS
			SG	1.0E+00	GUARANTEED FAILURE OF DECAY HEAT REMOVAL BY SG
3	6.2E-09	7.7	!LOCS8-1	2.8E-07	LOSS OF CCW/ESW - POS8-1
			ACWOO02SC	2.2E-02	(HE) FAIL TO ESTABLISH THE ALTERNATE CCWS BY FIRE PROTECTION WATER SUPPLY SYSTEM
			GI	1.0E+00	GUARANTEED FAILURE OF GRAVITY INJECTION
4	5.3E-09	6.6	!LOCA8-1	1.6E-04	LOSS OF COOLANT ACCIDENT - POS8-1
			CHIOO02RWS-DP3	1.6E-01	(HE) FAIL TO REFILL RWSAT WATER FROM RWSP
			GI	1.0E+00	GUARANTEED FAILURE OF GRAVITY INJECTION
			HPIOO02S-DP2	5.5E-02	(HE) FAIL TO START STANDBY SAFETY INJECTION PUMP
			RSSOO02LINE+P	3.8E-03	(HE) FAIL TO ESTABLISH RHR INJECTION LINE AND START STANDBY PUMP
			SG	1.0E+00	GUARANTEED FAILURE OF DECAY HEAT REMOVAL BY SG

Table 19.1-91 Dominant Cutsets of POS 8-1 for LPSD PRA (Sheet 2 of 10)

No	Cutsets freq.(/ry)	Percent	Cutsets	Frequency/ probability	Basic Event Description
5	3.6E-09	4.5	!LOCA8-1	1.6E-04	LOSS OF COOLANT ACCIDENT - POS8-1
			CHIOO02P+RWS-DP3	1.6E-01	(HE) FAIL TO START STANDBY CHARGING PUMP AND REFILL RWSAT WATER FROM RWSP
			GI	1.0E+00	GUARANTEED FAILURE OF GRAVITY INJECTION
			HPIOO02S-DP2	5.5E-02	(HE) FAIL TO START STANDBY SAFETY INJECTION PUMP
			LOAOO02LC	2.6E-03	(HE) FAIL TO ISOLATE THE LEAKAGE TRAIN OF RHR SYSTEM
6	3.4E-09	4.3	!LORH8-1	1.0E-05	LOSS OF RHR CAUSED BY OTHER FAILURES - POS8-1
			CHIOO02P+RWS-DP2	6.8E-02	(HE) FAIL TO START STANDBY CHARGING PUMP AND REFILL RWSAT WATER FROM RWSP
			GI	1.0E+00	GUARANTEED FAILURE OF GRAVITY INJECTION
			HPIOO02S	4.9E-03	(HE) FAIL TO START STANDBY SAFETY INJECTION PUMP
			SG	1.0E+00	GUARANTEED FAILURE OF DECAY HEAT REMOVAL BY SG
7	2.0E-09	2.5	!LOOP8-1	6.7E-04	LOSS OF OFFSITE POWER - POS8-1
			ACRPOS8-1-F	1.3E-01	FAILURE OF OFFSITE POWER RECOVERY (POS8-1)
			EPSCF3DLLRGTG-ALL	1.1E-03	CLASS-1E GTG A,B,C FAIL TO LOAD AND RUN AFTER FIRST HOUR OF OPERATION (CCF)
			EPSOO02RDG	2.1E-02	(HE) FAIL TO CONNECT THE ALTERNATE AC POWER SOURCE TO CLASS 1E BUS
8	1.7E-09	2.1	!LOOP8-1	6.7E-04	LOSS OF OFFSITE POWER - POS8-1
			ACRPOS8-1-F	1.3E-01	FAILURE OF OFFSITE POWER RECOVERY (POS8-1)
			EPSCF3DLLRGTG-ALL	1.1E-03	CLASS-1E GTG A,B,C FAIL TO LOAD AND RUN AFTER FIRST HOUR OF OPERATION (CCF)
			EPSDLLRAACA	1.9E-02	A-AAC FAIL TO LOAD AND RUN AFTER FIRST HOUR OF OPERATION
9	1.6E-09	2.0	!LOCA8-1	1.6E-04	LOSS OF COOLANT ACCIDENT - POS8-1
			CHIPMBD001A	2.0E-03	CVS-MPP-001A (A-CHI PUMP) FAIL TO START
			GI	1.0E+00	GUARANTEED FAILURE OF GRAVITY INJECTION
			HPIOO02S	4.9E-03	(HE) FAIL TO START STANDBY SAFETY INJECTION PUMP
			SG	1.0E+00	GUARANTEED FAILURE OF DECAY HEAT REMOVAL BY SG

Table 19.1-91 Dominant Cutsets of POS 8-1 for LPSD PRA (Sheet 3 of 10)

No	Cutsets freq.(/ry)	Percent	Cutsets	Frequency/ probability	Basic Event Description
10	8.9E-10	1.1	!LOOP8-1	6.7E-04	LOSS OF OFFSITE POWER - POS8-1
			ACWOO02SC	2.2E-02	(HE) FAIL TO ESTABLISH THE ALTERNATE CCWS BY FIRE PROTECTION WATER SUPPLY SYSTEM
			GI	1.0E+00	GUARANTEED FAILURE OF GRAVITY INJECTION
			SWSCF3PMBD001ABC-ALL	6.0E-05	EWS-MPP-001A,B,C (ESW PUMP) FAIL TO RE-START (CCF)
11	7.2E-10	0.90	!OVDR8-1	1.5E-03	LOSS OF RHR DUE TO OVERDRAIN - POS8-1
			GI	1.0E+00	GUARANTEED FAILURE OF GRAVITY INJECTION
			HPIOO02S	4.9E-03	(HE) FAIL TO START STANDBY SAFETY INJECTION PUMP
			SG	1.0E+00	GUARANTEED FAILURE OF DECAY HEAT REMOVAL BY SG
			SGNBTSWCCF1	1.0E-04	GROUP-1 APPLICATION SOFTWARE CCF
12	4.9E-10	0.61	!LOOP8-1	6.7E-04	LOSS OF OFFSITE POWER - POS8-1
			ACWOO02SC	2.2E-02	(HE) FAIL TO ESTABLISH THE ALTERNATE CCWS BY FIRE PROTECTION WATER SUPPLY SYSTEM
			CWSCF3PCBD001ABC-ALL	3.3E-05	NCS-MPP-001A,B,C (CCW PUMP) FAIL TO RE-START (CCF)
			GI	1.0E+00	GUARANTEED FAILURE OF GRAVITY INJECTION
13	4.6E-10	0.57	!LOOP8-1	6.7E-04	LOSS OF OFFSITE POWER - POS8-1
			ACRPOS8-1-F	1.3E-01	FAILURE OF OFFSITE POWER RECOVERY (POS8-1)
			EPSCF3DLLRGTG-ALL	1.1E-03	CLASS-1E GTG A,B,C FAIL TO LOAD AND RUN AFTER FIRST HOUR OF OPERATION (CCF)
			EPSDLADAACA	5.0E-03	A-AAC FAIL TO START
14	4.5E-10	0.56	!LOOP8-1	6.7E-04	LOSS OF OFFSITE POWER - POS8-1
			ACRPOS8-1-F	1.3E-01	FAILURE OF OFFSITE POWER RECOVERY (POS8-1)
			EPSCBFO52RAT-ABC	5.2E-06	EPS 52/RATA,B,C (BREAKER) FAIL TO OPEN (CCF)
15	4.5E-10	0.56	!LOOP8-1	6.7E-04	LOSS OF OFFSITE POWER - POS8-1
			ACRPOS8-1-F	1.3E-01	FAILURE OF OFFSITE POWER RECOVERY (POS8-1)
			EPSCBFO52UAT-ABC	5.2E-06	EPS 52/UATA,B,C (BREAKER) FAIL TO OPEN (CCF)

Table 19.1-91 Dominant Cutsets of POS 8-1 for LPSD PRA (Sheet 4 of 10)

No	Cutsets freq.(/ry)	Percent	Cutsets	Frequency/ probability	Basic Event Description
16	4.3E-10	0.54	!LOOP8-1	6.7E-04	LOSS OF OFFSITE POWER - POS8-1
			ACRPOS8-1-F	1.3E-01	FAILURE OF OFFSITE POWER RECOVERY (POS8-1)
			EPSCF3DLADGTG-ALL	2.4E-04	CLASS-1E GTG A,B,C FAIL TO START (CCF)
			EPSOO02RDG	2.1E-02	(HE) FAIL TO CONNECT THE ALTERNATE AC POWER SOURCE TO CLASS 1E BUS
17	4.2E-10	0.52	!LOCS8-1	2.8E-07	LOSS OF CCW/ESW - POS8-1
			CHIPMAD001A	1.5E-03	CVS-MPP-001A (A-CHI PUMP) FAIL TO START
			GI	1.0E+00	GUARANTEED FAILURE OF GRAVITY INJECTION
18	3.7E-10	0.46	!LOOP8-1	6.7E-04	LOSS OF OFFSITE POWER - POS8-1
			ACWOO02SC	2.2E-02	(HE) FAIL TO ESTABLISH THE ALTERNATE CCWS BY FIRE PROTECTION WATER SUPPLY SYSTEM
			GI	1.0E+00	GUARANTEED FAILURE OF GRAVITY INJECTION
			SWSCF3MVOD503ABC-ALL	0.0E+00	EWS-MOV-503A,B,C FAIL TO OPEN (CCF)
19	3.6E-10	0.45	!LOOP8-1	6.7E-04	LOSS OF OFFSITE POWER - POS8-1
			ACRPOS8-1-F	1.3E-01	FAILURE OF OFFSITE POWER RECOVERY (POS8-1)
			EPSCF3DLADGTG-ALL	2.4E-04	CLASS-1E GTG A,B,C FAIL TO START (CCF)
			EPSDLLRAACA	1.9E-02	A-AAC FAIL TO LOAD AND RUN AFTER FIRST HOUR OF OPERATION
20	3.4E-10	0.42	!LOOP8-1	6.7E-04	LOSS OF OFFSITE POWER - POS8-1
			ACRPOS8-1-S	8.7E-01	SUCCESS OF OFFSITE POWER RECOVERY (POS8-1)
			CHIOO01RECOV	5.8E-02	(HE) FAIL TO START CHARGING PUMP AND SAFETY INJECTION PUMP - LOCAL ACTION
			GI	1.0E+00	GUARANTEED FAILURE OF GRAVITY INJECTION
			SG	1.0E+00	GUARANTEED FAILURE OF DECAY HEAT REMOVAL BY SG
			SGNBTSWCCF3	1.0E-05	NON-SAFETY (PSMS) APPLICATION SOFTWARE CCF

Table 19.1-91 Dominant Cutsets of POS 8-1 for LPSD PRA (Sheet 5 of 10)

No	Cutsets freq.(/ry)	Percent	Cutsets	Frequency/ probability	Basic Event Description
21	3.2E-10	0.40	!LOOP8-1	6.7E-04	LOSS OF OFFSITE POWER - POS8-1
			ACRPOS8-1-F	1.3E-01	FAILURE OF OFFSITE POWER RECOVERY (POS8-1)
			EPSCF3DLSRGTG-ALL	1.8E-04	CLASS-1E GTG A,B,C FAIL TO LOAD AND RUN DURING FIRST HOUR OF OPERATION (CCF)
			EPSOO02RDG	2.1E-02	(HE) FAIL TO CONNECT THE ALTERNATE AC POWER SOURCE TO CLASS 1E BUS
22	2.8E-10	0.35	!LOCS8-1	2.8E-07	LOSS OF CCW/ESW - POS8-1
			ACWMVOD324A	1.0E-03	NCS-MOV-324A FAIL TO OPEN
			GI	1.0E+00	GUARANTEED FAILURE OF GRAVITY INJECTION
23	2.8E-10	0.35	!LOCS8-1	2.8E-07	LOSS OF CCW/ESW - POS8-1
			ACWMVOD321A	1.0E-03	NCS-MOV-321A FAIL TO OPEN
			GI	1.0E+00	GUARANTEED FAILURE OF GRAVITY INJECTION
24	2.8E-10	0.35	!LOCS8-1	2.8E-07	LOSS OF CCW/ESW - POS8-1
			ACWMVCD316A	1.0E-03	NCS-MOV-316A FAIL TO CLOSE
			GI	1.0E+00	GUARANTEED FAILURE OF GRAVITY INJECTION
25	2.8E-10	0.35	!LOCS8-1	2.8E-07	LOSS OF CCW/ESW - POS8-1
			ACWMVOD322A	1.0E-03	NCS-MOV-322A FAIL TO OPEN
			GI	1.0E+00	GUARANTEED FAILURE OF GRAVITY INJECTION
26	2.8E-10	0.35	!LOCS8-1	2.8E-07	LOSS OF CCW/ESW - POS8-1
			ACWMVOD325A	1.0E-03	NCS-MOV-325A FAIL TO OPEN
			GI	1.0E+00	GUARANTEED FAILURE OF GRAVITY INJECTION
27	2.8E-10	0.34	!LOOP8-1	6.7E-04	LOSS OF OFFSITE POWER - POS8-1
			ACRPOS8-1-F	1.3E-01	FAILURE OF OFFSITE POWER RECOVERY (POS8-1)
			EPSCF3DLLRGTG-ALL	1.1E-03	CLASS-1E GTG A,B,C FAIL TO LOAD AND RUN AFTER FIRST HOUR OF OPERATION (CCF)
			EPSSEFFAACA	3.0E-03	A-AAC SEQUENCER FAIL TO OPERATE

Table 19.1-91 Dominant Cutsets of POS 8-1 for LPSD PRA (Sheet 6 of 10)

No	Cutsets freq.(/ry)	Percent	Cutsets	Frequency/ probability	Basic Event Description
28	2.7E-10	0.33	!LOOP8-1	6.7E-04	LOSS OF OFFSITE POWER - POS8-1
			ACRPOS8-1-F	1.3E-01	FAILURE OF OFFSITE POWER RECOVERY (POS8-1)
			EPSCF3DLSRGTG-ALL	1.8E-04	CLASS-1E GTG A,B,C FAIL TO LOAD AND RUN DURING FIRST HOUR OF OPERATION (CCF)
			EPSDLLRAACA	1.9E-02	A-AAC FAIL TO LOAD AND RUN AFTER FIRST HOUR OF OPERATION
29	2.7E-10	0.33	!LOOP8-1	6.7E-04	LOSS OF OFFSITE POWER - POS8-1
			ACRPOS8-1-F	1.3E-01	FAILURE OF OFFSITE POWER RECOVERY (POS8-1)
			EPSCF3DLLRGTG-ALL	1.1E-03	CLASS-1E GTG A,B,C FAIL TO LOAD AND RUN AFTER FIRST HOUR OF OPERATION (CCF)
			EPSDLSRAACA	3.0E-03	A-AAC FAIL TO LOAD AND RUN DURING FIRST HOUR OF OPERATION
30	2.5E-10	0.31	!OVDR8-1	1.5E-03	LOSS OF RHR DUE TO OVERDRAIN - POS8-1
			CHIOO02P	2.6E-03	(HE) FAIL TO START STANDBY CHARGING PUMP
			CVCAVCD024C	1.2E-03	RHS-AOV-024C FAIL TO CLOSE
			GI	1.0E+00	GUARANTEED FAILURE OF GRAVITY INJECTION
			HPIOO02S-DP2	5.5E-02	(HE) FAIL TO START STANDBY SAFETY INJECTION PUMP
			SG	1.0E+00	GUARANTEED FAILURE OF DECAY HEAT REMOVAL BY SG
31	2.5E-10	0.31	!OVDR8-1	1.5E-03	LOSS OF RHR DUE TO OVERDRAIN - POS8-1
			CHIOO02P	2.6E-03	(HE) FAIL TO START STANDBY CHARGING PUMP
			CVCAVCD024B	1.2E-03	RHS-AOV-024B FAIL TO CLOSE
			GI	1.0E+00	GUARANTEED FAILURE OF GRAVITY INJECTION
			HPIOO02S-DP2	5.5E-02	(HE) FAIL TO START STANDBY SAFETY INJECTION PUMP
			SG	1.0E+00	GUARANTEED FAILURE OF DECAY HEAT REMOVAL BY SG

Table 19.1-91 Dominant Cutsets of POS 8-1 for LPSD PRA (Sheet 7 of 10)

No	Cutsets freq.(/ry)	Percent	Cutsets	Frequency/ probability	Basic Event Description
32	1.9E-10	0.23	!LOOP8-1	6.7E-04	LOSS OF OFFSITE POWER - POS8-1
			CHIPMBD001A	2.0E-03	CVS-MPP-001A (A-CHI PUMP) FAIL TO START
			GI	1.0E+00	GUARANTEED FAILURE OF GRAVITY INJECTION
			HPIOO02S-DP2	5.5E-02	(HE) FAIL TO START STANDBY SAFETY INJECTION PUMP
			RSSOO02P	2.6E-03	(HE) FAIL TO RE-START THE RHR PUMPS WHEN THE LOOP EVENT OCCURS
			SG	1.0E+00	GUARANTEED FAILURE OF DECAY HEAT REMOVAL BY SG
33	1.5E-10	0.18	!OVDR8-1	1.5E-03	LOSS OF RHR DUE TO OVERDRAIN - POS8-1
			GI	1.0E+00	GUARANTEED FAILURE OF GRAVITY INJECTION
			RTPBTSWCCF	1.0E-07	BASIC SOFTWARE CCF
34	1.4E-10	0.18	!LOOP8-1	6.7E-04	LOSS OF OFFSITE POWER - POS8-1
			ACRPOS8-1-F	1.3E-01	FAILURE OF OFFSITE POWER RECOVERY (POS8-1)
			EPSCF2DLLRAAC-ALL	1.5E-03	AAC A,B FAIL TO RUN AFTER FIRST HOUR OF OPERATION (CCF)
			EPSCF3DLLRGTG-ALL	1.1E-03	CLASS-1E GTG A,B,C FAIL TO LOAD AND RUN AFTER FIRST HOUR OF OPERATION (CCF)
35	1.4E-10	0.17	!LOOP8-1	6.7E-04	LOSS OF OFFSITE POWER - POS8-1
			ACRPOS8-1-F	1.3E-01	FAILURE OF OFFSITE POWER RECOVERY (POS8-1)
			EPSCF3SEFFGTG-ALL	7.5E-05	CLASS-1E GTG A,B,C SEQUENCER FAIL TO OPERATE (CCF)
			EPSOO02RDG	2.1E-02	(HE) FAIL TO CONNECT THE ALTERNATE AC POWER SOURCE TO CLASS 1E BUS
36	1.2E-10	0.15	!LOOP8-1	6.7E-04	LOSS OF OFFSITE POWER - POS8-1
			ACRPOS8-1-S	8.7E-01	SUCCESS OF OFFSITE POWER RECOVERY (POS8-1)
			EPSOO02RDG	2.1E-02	(HE) FAIL TO CONNECT THE ALTERNATE AC POWER SOURCE TO CLASS 1E BUS
			GI	1.0E+00	GUARANTEED FAILURE OF GRAVITY INJECTION
			SGNBTSWCCF3	1.0E-05	NON-SAFETY (PSMS) APPLICATION SOFTWARE CCF

Table 19.1-91 Dominant Cutsets of POS 8-1 for LPSD PRA (Sheet 8 of 10)

No	Cutsets freq.(/ry)	Percent	Cutsets	Frequency/ probability	Basic Event Description
37	1.2E-10	0.15	!LOOP8-1	6.7E-04	LOSS OF OFFSITE POWER - POS8-1
			ACRPOS8-1-F	1.3E-01	FAILURE OF OFFSITE POWER RECOVERY (POS8-1)
			EPSCF3DLLRGTG-ALL	1.1E-03	CLASS-1E GTG A,B,C FAIL TO LOAD AND RUN AFTER FIRST HOUR OF OPERATION (CCF)
			SGNST-BOP1	1.2E-03	BO-SIGNAL (TRAIN P1) FAILURE
38	1.1E-10	0.14	!LOOP8-1	6.7E-04	LOSS OF OFFSITE POWER - POS8-1
			ACRPOS8-1-F	1.3E-01	FAILURE OF OFFSITE POWER RECOVERY (POS8-1)
			EPSCF3SEFFGTG-ALL	7.5E-05	CLASS-1E GTG A,B,C SEQUENCER FAIL TO OPERATE (CCF)
			EPSDLLRAACA	1.9E-02	A-AAC FAIL TO LOAD AND RUN AFTER FIRST HOUR OF OPERATION
39	1.1E-10	0.13	!LOCA8-1	1.6E-04	LOSS OF COOLANT ACCIDENT - POS8-1
			CHICF2MVCD031BC-ALL	1.4E-04	CVS-LCV-031B,C FAIL TO CLOSE (CCF)
			GI	1.0E+00	GUARANTEED FAILURE OF GRAVITY INJECTION
			HPIOO02S	4.9E-03	(HE) FAIL TO START STANDBY SAFETY INJECTION PUMP
			SG	1.0E+00	GUARANTEED FAILURE OF DECAY HEAT REMOVAL BY SG
40	1.1E-10	0.13	!LOOP8-1	6.7E-04	LOSS OF OFFSITE POWER - POS8-1
			EPSCF4CBSO52STL-ALL	1.6E-07	EPS 52/STLA,B,C,D (BREAKER) SPURIOUS OPEN (CCF)
			GI	1.0E+00	GUARANTEED FAILURE OF GRAVITY INJECTION
41	1.1E-10	0.13	!LOOP8-1	6.7E-04	LOSS OF OFFSITE POWER - POS8-1
			EPSCF4CBSO52STH-ALL	1.6E-07	EPS 52/STHA,B,C,D (BREAKER) SPURIOUS OPEN (CCF)
			GI	1.0E+00	GUARANTEED FAILURE OF GRAVITY INJECTION
42	1.1E-10	0.13	!LOOP8-1	6.7E-04	LOSS OF OFFSITE POWER - POS8-1
			EPSCF4CBSO52LC-ALL	1.6E-07	EPS 52/LCA,B,C,D (BREAKER) SPURIOUS OPEN (CCF)
			GI	1.0E+00	GUARANTEED FAILURE OF GRAVITY INJECTION

Table 19.1-91 Dominant Cutsets of POS 8-1 for LPSD PRA (Sheet 9 of 10)

No	Cutsets freq.(/ry)	Percent	Cutsets	Frequency/ probability	Basic Event Description
43	1.1E-10	0.13	!LOCA8-1	1.6E-04	LOSS OF COOLANT ACCIDENT - POS8-1
			CHIOO02RWS-DP2	6.7E-02	(HE) FAIL TO REFILL RWSAT WATER FROM RWSP
			GI	1.0E+00	GUARANTEED FAILURE OF GRAVITY INJECTION
			HPIOO02S	4.9E-03	(HE) FAIL TO START STANDBY SAFETY INJECTION PUMP
			RSSPMBD001C	2.0E-03	RHS-MPP-001C (C-CS/RHR PUMP) FAIL TO START
			SG	1.0E+00	GUARANTEED FAILURE OF DECAY HEAT REMOVAL BY SG
44	1.0E-10	0.13	!LOOP8-1	6.7E-04	LOSS OF OFFSITE POWER - POS8-1
			ACRPOS8-1-S	8.7E-01	SUCCESS OF OFFSITE POWER RECOVERY (POS8-1)
			EPSDLLRAACA	1.9E-02	A-AAC FAIL TO LOAD AND RUN AFTER FIRST HOUR OF OPERATION
			GI	1.0E+00	GUARANTEED FAILURE OF GRAVITY INJECTION
			SGNBTSWCCF3	1.0E-05	NON-SAFETY (PSMS) APPLICATION SOFTWARE CCF
45	1.0E-10	0.12	!LORH8-1	1.0E-05	LOSS OF RHR CAUSED BY OTHER FAILURES - POS8-1
			CHIPMBD001A	2.0E-03	CVS-MPP-001A (A-CHI PUMP) FAIL TO START
			GI	1.0E+00	GUARANTEED FAILURE OF GRAVITY INJECTION
			HPIOO02S	4.9E-03	(HE) FAIL TO START STANDBY SAFETY INJECTION PUMP
			SG	1.0E+00	GUARANTEED FAILURE OF DECAY HEAT REMOVAL BY SG
46	9.6E-11	0.12	!LOOP8-1	6.7E-04	LOSS OF OFFSITE POWER - POS8-1
			ACRPOS8-1-F	1.3E-01	FAILURE OF OFFSITE POWER RECOVERY (POS8-1)
			EPSCF3DLADGTG-ALL	2.4E-04	CLASS-1E GTG A,B,C FAIL TO START (CCF)
			EPSDLADAACA	5.0E-03	A-AAC FAIL TO START
47	9.5E-11	0.12	!LOCA8-1	1.6E-04	LOSS OF COOLANT ACCIDENT - POS8-1
			CHIPMYR001A	1.2E-04	CVS-MPP-001A (A-CHI PUMP) FAIL TO RUN
			GI	1.0E+00	GUARANTEED FAILURE OF GRAVITY INJECTION
			HPIOO02S	4.9E-03	(HE) FAIL TO START STANDBY SAFETY INJECTION PUMP
			SG	1.0E+00	GUARANTEED FAILURE OF DECAY HEAT REMOVAL BY SG

Table 19.1-91 Dominant Cutsets of POS 8-1 for LPSD PRA (Sheet 10 of 10)

No	Cutsets freq.(/ry)	Percent	Cutsets	Frequency/ probability	Basic Event Description
48	9.4E-11	0.12	!LOCA8-1	1.6E-04	LOSS OF COOLANT ACCIDENT - POS8-1
			CHIOO01RECOV	5.8E-02	(HE) FAIL TO START CHARGING PUMP AND SAFETY INJECTION PUMP - LOCAL ACTION
			GI	1.0E+00	GUARANTEED FAILURE OF GRAVITY INJECTION
			SGNBTSWCCF3	1.0E-05	NON-SAFETY (PSMS) APPLICATION SOFTWARE CCF
49	9.0E-11	0.11	!LOCA8-1	1.6E-04	LOSS OF COOLANT ACCIDENT - POS8-1
			CHICF4MVOD031-ALL	1.1E-04	CVS-LCV-031D,E,F,G FAIL TO OPEN (CCF)
			GI	1.0E+00	GUARANTEED FAILURE OF GRAVITY INJECTION
			HPIOO02S	4.9E-03	(HE) FAIL TO START STANDBY SAFETY INJECTION PUMP
			SG	1.0E+00	GUARANTEED FAILURE OF DECAY HEAT REMOVAL BY SG
50	8.1E-11	0.10	!LOOP8-1	6.7E-04	LOSS OF OFFSITE POWER - POS8-1
			GI	1.0E+00	GUARANTEED FAILURE OF GRAVITY INJECTION
			SG	1.0E+00	GUARANTEED FAILURE OF DECAY HEAT REMOVAL BY SG
			SWSCF3PMYR001ABC-ALL	1.2E-07	EWS-MPP-001A,B,C (EWS PUMP) FAIL TO RUN (CCF)

Table 19.1-92 Planned Maintenance Schedule for Sensitivity Case 3

System \ POS	(1) Low power operation	(2) Hot standby	(3) Hot and cold shutdown (RCS is filled with coolant)	(4)-1 Cold shutdown (Mid-loop operation) (RCS closed)	(4)-2 Cold shutdown (Mid-loop operation) (RCS opened)	(4)-3 Cold shutdown (Mid-loop operation) (SG isolated)	(5) Refueling cavity s filled with water	(6) No fuels in the core	(7) Refueling cavity is filled with water	(8)-1 Cold shutdown (Mid-loop operation) (SG isolated)	(8)-2 Cold shutdown (Mid-loop operation) (RCS opened)	(8)-3 Cold shutdown (Mid-loop operation) (RCS closed)	(9) Cold shutdown (RCS is filled with coolant)	(10) RCS leakage test (RHRS isolated from RCS)	(11) Cold and hot shutdown (RCS is filled with coolant)	(12) Hot standby	(13) Low power operation
A Class 1E 6.9kV bus	N/A	N/A	△	△	△	△	N/A	N/A	N/A	△	△	△	△	N/A	△	N/A	N/A
B Class 1E 6.9kV bus	N/A	N/A	△	△	△	△	N/A	N/A	N/A	△	△	△	△	N/A	△	N/A	N/A
C Class 1E 6.9kV bus	N/A	N/A	△	△	△	△	N/A	N/A	N/A	△	△	△	△	N/A	△	N/A	N/A
D Class 1E 6.9kV bus	N/A	N/A	△	△	△	△	N/A	N/A	N/A	△	△	△	△	N/A	△	N/A	N/A
A Class 1E 480V load center bus	N/A	N/A	△	△	△	△	N/A	N/A	N/A	△	△	△	△	N/A	△	N/A	N/A
B Class 1E 480V load center bus	N/A	N/A	△	△	△	△	N/A	N/A	N/A	△	△	△	△	N/A	△	N/A	N/A
C Class 1E 480V load center bus	N/A	N/A	△	△	△	△	N/A	N/A	N/A	△	△	△	△	N/A	△	N/A	N/A
D Class 1E 480V load center bus	N/A	N/A	△	△	△	△	N/A	N/A	N/A	△	△	△	△	N/A	△	N/A	N/A
A Class 1E 480V motor control center bus	N/A	N/A	△	△	△	△	N/A	N/A	N/A	△	△	△	△	N/A	△	N/A	N/A
B Class 1E 480V motor control center bus	N/A	N/A	△	△	△	△	N/A	N/A	N/A	△	△	△	△	N/A	△	N/A	N/A
C Class 1E 480V motor control center bus	N/A	N/A	△	△	△	△	N/A	N/A	N/A	△	△	△	△	N/A	△	N/A	N/A
D Class 1E 480V motor control center bus	N/A	N/A	△	△	△	△	N/A	N/A	N/A	△	△	△	△	N/A	△	N/A	N/A
Offsite power main transformer	N/A	N/A	△	△	△	△	N/A	N/A	N/A	△	△	△	△	N/A	△	N/A	N/A
Offsite power reserve transformer	N/A	N/A	△	△	△	△	N/A	N/A	N/A	△	△	△	△	N/A	△	N/A	N/A
A Class 1E gas turbine generator	N/A	N/A	△	△	△	△	N/A	N/A	N/A	△	△	△	△	N/A	△	N/A	N/A
B Class 1E gas turbine generator	N/A	N/A	△	△	△	△	N/A	N/A	N/A	△	△	△	△	N/A	△	N/A	N/A
C Class 1E gas turbine generator	N/A	N/A	△	△	△	△	N/A	N/A	N/A	△	△	△	△	N/A	△	N/A	N/A
D Class 1E gas turbine generator	N/A	N/A	△	△	△	△	N/A	N/A	N/A	△	△	△	△	N/A	△	N/A	N/A
A essential service water pump	N/A	N/A	○	△	△	△	N/A	N/A	N/A	○	○	○	○	N/A	○	N/A	N/A
B essential service water pump	N/A	N/A	○	○	○	○	N/A	N/A	N/A	○	○	○	○	N/A	○	N/A	N/A
C essential service water pump	N/A	N/A	○	○	○	○	N/A	N/A	N/A	○	△	△	△	N/A	○	N/A	N/A
D essential service water pump	N/A	N/A	○	○	○	○	N/A	N/A	N/A	△	△	△	△	N/A	○	N/A	N/A
A essential service water header	N/A	N/A	○	△	△	△	N/A	N/A	N/A	○	○	○	○	N/A	○	N/A	N/A
B essential service water header	N/A	N/A	○	○	○	○	N/A	N/A	N/A	○	○	○	○	N/A	○	N/A	N/A
C essential service water header	N/A	N/A	○	○	○	○	N/A	N/A	N/A	○	△	△	△	N/A	○	N/A	N/A
D essential service water header	N/A	N/A	○	○	○	○	N/A	N/A	N/A	△	△	△	△	N/A	○	N/A	N/A
A component cooling water pump	N/A	N/A	○	△	△	△	N/A	N/A	N/A	○	○	○	○	N/A	○	N/A	N/A
B component cooling water pump	N/A	N/A	○	○	○	○	N/A	N/A	N/A	○	○	○	○	N/A	○	N/A	N/A
C component cooling water pump	N/A	N/A	○	○	○	○	N/A	N/A	N/A	○	△	△	△	N/A	○	N/A	N/A
D component cooling water pump	N/A	N/A	○	○	○	○	N/A	N/A	N/A	△	△	△	△	N/A	○	N/A	N/A
A component cooling water header	N/A	N/A	○	△	△	△	N/A	N/A	N/A	○	○	○	○	N/A	○	N/A	N/A
B component cooling water header	N/A	N/A	○	○	○	○	N/A	N/A	N/A	○	○	○	○	N/A	○	N/A	N/A
C component cooling water header	N/A	N/A	○	○	○	○	N/A	N/A	N/A	○	△	△	△	N/A	○	N/A	N/A
D component cooling water header	N/A	N/A	○	○	○	○	N/A	N/A	N/A	△	△	△	△	N/A	○	N/A	N/A
A CS/RHR pump	N/A	N/A	○	△	△	△	N/A	N/A	N/A	○	○	○	○	N/A	○	N/A	N/A
B CS/RHR pump	N/A	N/A	○	△	△	△	N/A	N/A	N/A	○	○	○	○	N/A	○	N/A	N/A
C CS/RHR pump	N/A	N/A	○	○	○	○	N/A	N/A	N/A	△	△	△	△	N/A	○	N/A	N/A
D CS/RHR pump	N/A	N/A	○	○	○	○	N/A	N/A	N/A	△	△	△	△	N/A	○	N/A	N/A
A Safety injection pump	N/A	N/A	×	×	×	×	N/A	N/A	N/A	△	△	△	△	N/A	△	N/A	N/A
B Safety injection pump	N/A	N/A	△	△	△	△	N/A	N/A	N/A	×	×	×	×	N/A	×	N/A	N/A
C Safety injection pump	N/A	N/A	×	×	×	×	N/A	N/A	N/A	△	△	△	△	N/A	△	N/A	N/A
D Safety injection pump	N/A	N/A	△	△	△	△	N/A	N/A	N/A	×	×	×	×	N/A	×	N/A	N/A
A Charging pump	N/A	N/A	×	×	×	×	N/A	N/A	N/A	△	○	○	○	N/A	○	N/A	N/A
B Charging pump	N/A	N/A	○	○	○	○	N/A	N/A	N/A	×	×	×	×	N/A	×	N/A	N/A
B Motor-driven emergency feed water pump	N/A	N/A	△	△	△	△	N/A	N/A	N/A	△	△	△	△	N/A	△	N/A	N/A
C Motor-driven emergency feed water pump	N/A	N/A	△	△	△	△	N/A	N/A	N/A	△	△	△	△	N/A	△	N/A	N/A
A main steam relief valve	N/A	N/A	△	△	△	△	N/A	N/A	N/A	△	△	△	△	N/A	△	N/A	N/A
B main steam relief valve	N/A	N/A	△	△	△	△	N/A	N/A	N/A	△	△	△	△	N/A	△	N/A	N/A
C main steam relief valve	N/A	N/A	△	△	△	△	N/A	N/A	N/A	△	△	△	△	N/A	△	N/A	N/A
D main steam relief valve	N/A	N/A	△	△	△	△	N/A	N/A	N/A	△	△	△	△	N/A	△	N/A	N/A
RWSP	N/A	N/A	△	△	△	△	N/A	N/A	N/A	△	△	△	△	N/A	△	N/A	N/A
RWSAT	N/A	N/A	△	△	△	△	N/A	N/A	N/A	△	△	△	△	N/A	△	N/A	N/A

○ : Run
△ : Standby
× : Outage
N/A : Not applicable

Table 19.1-93 Basic Events (Hardware Failure, Human Error) FV Importance of POS 8-1 for LPSD PRA (Sheet 1 of 3)

Rank	Basic Event ID	Basic Event Description	Basic Event Probability	FV Importance	RAW
1	HPIOO02S-DP2	(HE) FAIL TO START STANDBY SAFETY INJECTION PUMP	5.5E-02	6.0E-01	1.1E+01
2	CHIOO02P	(HE) FAIL TO START STANDBY CHARGING PUMP	2.6E-03	2.9E-01	1.1E+02
3	CHIOO02P+RWS-DP3	(HE) FAIL TO START STANDBY CHARGING PUMP AND REFILL RWSAT WATER FROM RWSP	1.6E-01	2.3E-01	2.2E+00
4	RSSOO02P	(HE) FAIL TO RE-START THE RHR PUMPS WHEN THE LOOP EVENT OCCURS	2.6E-03	2.0E-01	7.8E+01
5	ACRPOS8-1-F	FAILURE OF OFFSITE POWER RECOVERY (POS8-1)	1.3E-01	1.2E-01	1.8E+00
6	ACWOO02SC	(HE) FAIL TO ESTABLISH THE ALTERNATE CCWS BY FIRE PROTECTION WATER SUPPLY SYSTEM	2.2E-02	1.0E-01	5.5E+00
7	HPIOO02S	(HE) FAIL TO START STANDBY SAFETY INJECTION PUMP	4.9E-03	9.1E-02	2.0E+01
8	RSSOO02LINE+P	(HE) FAIL TO ESTABLISH RHR INJECTION LINE AND START STANDBY PUMP	3.8E-03	6.8E-02	1.9E+01
9	CHIOO02RWS-DP3	(HE) FAIL TO REFILL RWSAT WATER FROM RWSP	1.6E-01	6.7E-02	1.4E+00
10	EPSCF3DLLRGTG-ALL	CLASS-1E GTG A,B,C FAIL TO LOAD AND RUN AFTER FIRST HOUR OF OPERATION (CCF)	1.1E-03	6.7E-02	6.1E+01
11	EPSOO02RDG	(HE) FAIL TO CONNECT THE ALTERNATE AC POWER SOURCE TO CLASS 1E BUS	2.1E-02	4.8E-02	3.2E+00
12	LOAOO02LC	(HE) FAIL TO ISOLATE THE LEAKAGE TRAIN OF RHR SYSTEM	2.6E-03	4.6E-02	1.9E+01
13	CHIOO02P+RWS-DP2	(HE) FAIL TO START STANDBY CHARGING PUMP AND REFILL RWSAT WATER FROM RWSP	6.8E-02	4.4E-02	1.6E+00

Table 19.1-93 Basic Events (Hardware Failure, Human Error) FV Importance of POS 8-1 for LPSD PRA (Sheet 2 of 3)

Rank	Basic Event ID	Basic Event Description	Basic Event Probability	FV Importance	RAW
14	EPSDLLRAACA	A-AAC FAIL TO LOAD AND RUN AFTER FIRST HOUR OF OPERATION	1.8E-02	3.9E-02	3.2E+00
15	CHIPMBD001A	CVS-MPP-001A (A-CHI PUMP) FAIL TO START	2.0E-03	2.5E-02	1.4E+01
16	SWSCF3PMBD001ABC-ALL	EWS-MPP-001A,B,C (ESW PUMP) FAIL TO RE-START (CCF)	6.0E-05	1.6E-02	2.7E+02
17	EPSCF3DLADGTG-ALL	CLASS-1E GTG A,B,C FAIL TO START (CCF)	2.4E-04	1.4E-02	6.1E+01
18	SGNBTSWCCF1	GROUP-1 APPLICATION SOFTWARE CCF	1.0E-04	1.2E-02	1.2E+02
19	SGNBTSWCCF3	NON-SAFETY (PSMS) APPLICATION SOFTWARE CCF	1.0E-05	1.2E-02	1.2E+03
20	ACRPOS8-1-S	SUCCESS OF OFFSITE POWER RECOVERY (POS8-1)	8.7E-01	1.1E-02	1.0E+00
21	EPSCF3DLSRGTG-ALL	CLASS-1E GTG A,B,C FAIL TO LOAD AND RUN DURING FIRST HOUR OF OPERATION (CCF)	1.8E-04	1.1E-02	6.1E+01
22	EPSDLLREGTGC-ABC	C-CLASS 1E GTG FAIL TO LOAD AND RUN AFTER FIRST HOUR OF OPERATION	1.7E-02	1.1E-02	1.6E+00
23	EPSDLADAACA	A-AAC FAIL TO START	4.7E-03	1.1E-02	3.2E+00
24	CWSCF3PCBD001ABC-ALL	NCS-MPP-001A,B,C (CCW PUMP) FAIL TO RE-START (CCF)	3.3E-05	8.7E-03	2.7E+02
25	EPSDLLREGTGA-ABC	A-CLASS 1E GTG FAIL TO LOAD AND RUN AFTER FIRST HOUR OF OPERATION	1.7E-02	8.0E-03	1.5E+00
26	EPSDLLREGTGB-ABC	B-CLASS 1E GTG FAIL TO LOAD AND RUN AFTER FIRST HOUR OF OPERATION	1.7E-02	7.7E-03	1.4E+00
27	CHIPMAD001A	CVS-MPP-001A (A-CHI PUMP) FAIL TO START	1.5E-03	6.9E-03	5.6E+00

Table 19.1-93 Basic Events (Hardware Failure, Human Error) FV Importance of POS 8-1 for LPSD PRA (Sheet 3 of 3)

Rank	Basic Event ID	Basic Event Description	Basic Event Probability	FV Importance	RAW
28	SWSCF3MVOD503ABC-ALL	EWS-MOV-503A,B,C FAIL TO OPEN (CCF)	2.5E-05	6.6E-03	2.7E+02
29	EPSSEFFAACA	A-AAC SEQUENCER FAIL TO OPERATE	2.9E-03	6.4E-03	3.2E+00
30	CHIOO01RECOV	(HE) FAIL TO START CHARGING PUMP AND SAFETY INJECTION PUMP - LOCAL ACTION	5.8E-02	6.1E-03	1.1E+00
31	CHIOO02RWS-DP2	(HE) FAIL TO REFILL RWSAT WATER FROM RWSP	6.7E-02	6.1E-03	1.1E+00
32	EPSDLSRAACA	A-AAC FAIL TO LOAD AND RUN DURING FIRST HOUR OF OPERATION	2.8E-03	6.2E-03	3.2E+00
33	EPSCBFO52RAT-ABC	EPS 52/RATA,B,C (BREAKER) FAIL TO OPEN (CCF)	5.2E-06	5.6E-03	1.1E+03
34	EPSCBFO52UAT-ABC	EPS 52/UATA,B,C (BREAKER) FAIL TO OPEN (CCF)	5.2E-06	5.6E-03	1.1E+03

Table 19.1-94 Basic Events (Hardware Failure, Human Error) RAW of POS 8-1 for LPSD PRA (Sheet 1 of 61)

Rank	Basic Event ID	Basic Event Description	Basic Event Probability	RAW	FV Importance
1	RTPBTSWCCF	BASIC SOFTWARE CCF	1.0E-07	2.9E+04	2.9E-03
2	SWSCF3PMYR001ABC-ALL	EWS-MPP-001A,B,C (EWS PUMP) FAIL TO RUN (CCF)	1.2E-07	1.1E+04	1.3E-03
3	CWSCF3PCYR001ABC-ALL	NCS-MPP-001A,B,C (CCW PUMP) FAIL TO RUN (CCF)	6.7E-08	1.1E+04	7.1E-04
4	CWSCF3RHPF001ABC-ALL	NCS-MHX-001A,B,C (CCW HX) PLUG / FOUL(CCF)	3.6E-08	1.1E+04	3.8E-04
5	EPSCF4CBSO52STH-ALL	EPS 52/STHA,B,C,D (BREAKER) SPURIOUS OPEN (CCF)	1.6E-07	8.3E+03	1.3E-03
6	EPSCF4CBSO52STL-ALL	EPS 52/STLA,B,C,D (BREAKER) SPURIOUS OPEN (CCF)	1.6E-07	8.3E+03	1.3E-03
7	EPSCF4CBSO52LC-ALL	EPS 52/LCA,B,C,D (BREAKER) SPURIOUS OPEN (CCF)	1.6E-07	8.3E+03	1.3E-03
8	EPSCF4CBSO52STL-124	EPS 52/STLA,B,C (BREAKER) SPURIOUS OPEN (CCF)	2.9E-08	8.3E+03	2.4E-04
9	EPSCF4CBSO52STH-123	EPS 52/STHA,B,C (BREAKER) SPURIOUS OPEN (CCF)	2.9E-08	8.3E+03	2.4E-04
10	EPSCF4CBSO52LC-123	EPS 52/LCA,B,C (BREAKER) SPURIOUS OPEN (CCF)	2.9E-08	8.3E+03	2.4E-04
11	SGNBTSWCCF3	NON-SAFETY (PSMS) APPLICATION SOFTWARE CCF	1.0E-05	1.2E+03	1.2E-02
12	EPSCBFO52RAT-ABC	EPS 52/RATA,B,C (BREAKER) FAIL TO OPEN (CCF)	5.2E-06	1.1E+03	5.6E-03
13	EPSCBFO52UAT-ABC	EPS 52/UATA,B,C (BREAKER) FAIL TO OPEN (CCF)	5.2E-06	1.1E+03	5.6E-03
14	EPSCF4CBSC52UAT-ALL	EPS 52/UATA,B,C,D (BREAKER) SPURIOUS CLOSE (CCF)	1.6E-07	1.1E+03	1.7E-04

Table 19.1-94 Basic Events (Hardware Failure, Human Error) RAW of POS 8-1 for LPSD PRA (Sheet 2 of 61)

Rank	Basic Event ID	Basic Event Description	Basic Event Probability	RAW	FV Importance
15	EPSCF4CBSC52RAT-ALL	EPS 52/RATA,B,C,D (BREAKER) SPURIOUS CLOSE (CCF)	1.6E-07	1.1E+03	1.7E-04
16	EPSCF4CBSC52RAT-124	EPS 52/RATA,B,C (BREAKER) SPURIOUS CLOSE (CCF)	2.9E-08	1.1E+03	3.1E-05
17	EPSCF4CBSC52UAT-123	EPS 52/UATA,B,C (BREAKER) SPURIOUS CLOSE (CCF)	2.9E-08	1.1E+03	3.1E-05
18	EPSCF4CBSO52STL-234	EPS 52/STLA,C,D (BREAKER) SPURIOUS OPEN (CCF)	2.9E-08	3.5E+02	1.0E-05
19	EPSCF4CBSO52STH-134	EPS 52/STHA,C,D (BREAKER) SPURIOUS OPEN (CCF)	2.9E-08	3.5E+02	1.0E-05
20	CWSCF3RHPF001ABC-13	NCS-MHX-001A,C (CCW HX) PLUG / FOUL(CCF)	1.8E-08	3.5E+02	6.2E-06
21	EPSCF4CBSO52STL-134	EPS 52/STLA,B,D (BREAKER) SPURIOUS OPEN (CCF)	2.9E-08	3.1E+02	9.0E-06
22	EPSCF4CBSO52STH-124	EPS 52/STHA,B,D (BREAKER) SPURIOUS OPEN (CCF)	2.9E-08	3.1E+02	9.0E-06
23	EPSCF4CBSO52STH-13	EPS 52/STHA,C (BREAKER) SPURIOUS OPEN (CCF)	3.4E-08	3.0E+02	1.0E-05
24	EPSCF4CBSO52STL-24	EPS 52/STLA,C (BREAKER) SPURIOUS OPEN (CCF)	3.4E-08	3.0E+02	1.0E-05
25	ACWCVEL306A	NCS-VLV-306A EXTERNAL LEAK LARGE	4.8E-08	3.0E+02	1.4E-05
26	EPSCF4CBSO52LC-13	EPS 52/LCA,C (BREAKER) SPURIOUS OPEN (CCF)	3.4E-08	3.0E+02	1.0E-05
27	EPSCF4CBSO52LC-134	EPS 52/LCA,C,D (BREAKER) SPURIOUS OPEN (CCF)	2.9E-08	3.0E+02	8.7E-06
28	ACWMVEL316A	NCS-MOV-316A EXTERNAL LEAK LARGE	2.4E-08	3.0E+02	7.2E-06

Table 19.1-94 Basic Events (Hardware Failure, Human Error) RAW of POS 8-1 for LPSD PRA (Sheet 3 of 61)

Rank	Basic Event ID	Basic Event Description	Basic Event Probability	RAW	FV Importance
29	CWSPNELCCWB	NCS CWS TRAIN B PIPING EXTERNAL LEAK LARGE	1.1E-06	3.0E+02	3.2E-04
30	CWSPNELCCWA	NCS CWS TRAIN A PIPING EXTERNAL LEAK LARGE	8.8E-07	3.0E+02	2.6E-04
31	CWSPNELCCWA1	NCS CWS A1-HEADER LINE PIPING EXTERNAL LEAK LARGE	8.2E-07	3.0E+02	2.5E-04
32	CWSRIEL001B1	NCS-MHX-001B (B-CCW HX) TUBE EXTERNAL LEAK LARGE	7.2E-07	3.0E+02	2.2E-04
33	CWSRIEL001A1	NCS-MHX-001A (A-CCW HX) TUBE EXTERNAL LEAK LARGE	7.2E-07	3.0E+02	2.2E-04
34	CWSPMEL001B	NCS-MPP-001B (B-CCW PUMP) EXTERNAL LEAK LARGE	1.9E-07	3.0E+02	5.7E-05
35	CWSPMEL001A	NCS-MPP-001A (A-CCW PUMP) EXTERNAL LEAK LARGE	1.9E-07	3.0E+02	5.7E-05
36	HPIXVEL114B	NCS-VLV-114B EXTERNAL LEAK LARGE	7.2E-08	3.0E+02	2.2E-05
37	CWSXVEL005B	NCS-VLV-005B EXTERNAL LEAK LARGE	7.2E-08	3.0E+02	2.2E-05
38	CWSXVEL101B	NCS-VLV-101B EXTERNAL LEAK LARGE	7.2E-08	3.0E+02	2.2E-05
39	HPIXVEL115B	NCS-VLV-115B EXTERNAL LEAK LARGE	7.2E-08	3.0E+02	2.2E-05
40	HPIXVEL119B	NCS-VLV-119B EXTERNAL LEAK LARGE	7.2E-08	3.0E+02	2.2E-05
41	CWSXVEL018B	NCS-VLV-018B EXTERNAL LEAK LARGE	7.2E-08	3.0E+02	2.2E-05
42	HPIXVEL111B	NCS-VLV-111B EXTERNAL LEAK LARGE	7.2E-08	3.0E+02	2.2E-05

Table 19.1-94 Basic Events (Hardware Failure, Human Error) RAW of POS 8-1 for LPSD PRA (Sheet 4 of 61)

Rank	Basic Event ID	Basic Event Description	Basic Event Probability	RAW	FV Importance
43	CWSXVEL008B	NCS-VLV-008B EXTERNAL LEAK LARGE	7.2E-08	3.0E+02	2.2E-05
44	HPIXVEL116B	NCS-VLV-116B EXTERNAL LEAK LARGE	7.2E-08	3.0E+02	2.2E-05
45	CWSXVEL104B	NCS-VLV-104B EXTERNAL LEAK LARGE	7.2E-08	3.0E+02	2.2E-05
46	CWSXVEL018A	NCS-VLV-018A EXTERNAL LEAK LARGE	7.2E-08	3.0E+02	2.2E-05
47	HPIXVEL116A	NCS-VLV-116A EXTERNAL LEAK LARGE	7.2E-08	3.0E+02	2.2E-05
48	HPIXVEL119A	NCS-VLV-119A EXTERNAL LEAK LARGE	7.2E-08	3.0E+02	2.2E-05
49	HPIXVEL111A	NCS-VLV-111A EXTERNAL LEAK LARGE	7.2E-08	3.0E+02	2.2E-05
50	CWSXVEL104A	NCS-VLV-104A EXTERNAL LEAK LARGE	7.2E-08	3.0E+02	2.2E-05
51	CWSXVEL101A	NCS-VLV-101A EXTERNAL LEAK LARGE	7.2E-08	3.0E+02	2.2E-05
52	HPIXVEL115A	NCS-VLV-115A EXTERNAL LEAK LARGE	7.2E-08	3.0E+02	2.2E-05
53	CWSXVEL005A	NCS-VLV-005A EXTERNAL LEAK LARGE	7.2E-08	3.0E+02	2.2E-05
54	CWSXVEL008A	NCS-VLV-008A EXTERNAL LEAK LARGE	7.2E-08	3.0E+02	2.2E-05
55	HPIXVEL114A	NCS-VLV-114A EXTERNAL LEAK LARGE	7.2E-08	3.0E+02	2.2E-05
56	CWSCVEL016B	NCS-VLV-016B EXTERNAL LEAK LARGE	4.8E-08	3.0E+02	1.4E-05

Table 19.1-94 Basic Events (Hardware Failure, Human Error) RAW of POS 8-1 for LPSD PRA (Sheet 5 of 61)

Rank	Basic Event ID	Basic Event Description	Basic Event Probability	RAW	FV Importance
57	CWSCVEL016A	NCS-VLV-016A EXTERNAL LEAK LARGE	4.8E-08	3.0E+02	1.4E-05
58	CWSMVEL020B	NCS-MOV-020B EXTERNAL LEAK LARGE	2.4E-08	3.0E+02	7.2E-06
59	CWSMVEL007B	NCS-MOV-007B EXTERNAL LEAK LARGE	2.4E-08	3.0E+02	7.2E-06
60	CWSMVEL020A	NCS-MOV-020A EXTERNAL LEAK LARGE	2.4E-08	3.0E+02	7.2E-06
61	CWSMVEL007A	NCS-MOV-007A EXTERNAL LEAK LARGE	2.4E-08	3.0E+02	7.2E-06
62	EPSCF4CBSO52LC-12	EPS 52/LCA,B (BREAKER) SPURIOUS OPEN (CCF)	3.4E-08	3.0E+02	1.0E-05
63	EPSCF4CBSO52STH-12	EPS 52/STHA,B (BREAKER) SPURIOUS OPEN (CCF)	3.4E-08	3.0E+02	1.0E-05
64	EPSCF4CBSO52STL-14	EPS 52/STLA,B (BREAKER) SPURIOUS OPEN (CCF)	3.4E-08	3.0E+02	1.0E-05
65	EPSCF4CBSO52LC-124	EPS 52/LCA,B,D (BREAKER) SPURIOUS OPEN (CCF)	2.9E-08	3.0E+02	8.7E-06
66	RSSRXEL001A	RHS-MHX-001A (A-CS/RHR HX) SHELL EXTERNAL LEAK LARGE	9.6E-08	3.0E+02	2.8E-05
67	RSSRXEL001B	RHS-MHX-001B (B-CS/RHR HX) SHELL EXTERNAL LEAK LARGE	9.6E-08	3.0E+02	2.8E-05
68	RSSXVEL144A	NCS-VLV-144A EXTERNAL LEAK LARGE	7.2E-08	3.0E+02	2.1E-05
69	RSSXVEL141A	NCS-VLV-141A EXTERNAL LEAK LARGE	7.2E-08	3.0E+02	2.1E-05
70	RSSXVEL144B	NCS-VLV-144B EXTERNAL LEAK LARGE	7.2E-08	3.0E+02	2.1E-05

Table 19.1-94 Basic Events (Hardware Failure, Human Error) RAW of POS 8-1 for LPSD PRA (Sheet 6 of 61)

Rank	Basic Event ID	Basic Event Description	Basic Event Probability	RAW	FV Importance
71	RSSXVEL141B	NCS-VLV-141B EXTERNAL LEAK LARGE	7.2E-08	3.0E+02	2.1E-05
72	RSSMVEL145B	NCS-MOV-145B EXTERNAL LEAK LARGE	2.4E-08	3.0E+02	7.1E-06
73	RSSMVEL145A	NCS-MOV-145A EXTERNAL LEAK LARGE	2.4E-08	3.0E+02	7.1E-06
74	CWSXVEL033A	NCS-VLV-033A EXTERNAL LEAK LARGE	7.2E-08	3.0E+02	2.1E-05
75	CWSXVEL034A	NCS-VLV-034A EXTERNAL LEAK LARGE	7.2E-08	3.0E+02	2.1E-05
76	RSSXVEL125B	NCS-VLV-125B EXTERNAL LEAK LARGE	7.2E-08	3.0E+02	2.1E-05
77	RSSXVEL128B	NCS-VLV-128B EXTERNAL LEAK LARGE	7.2E-08	3.0E+02	2.1E-05
78	RSSXVEL131B	NCS-VLV-131B EXTERNAL LEAK LARGE	7.2E-08	3.0E+02	2.1E-05
79	RSSXVEL131A	NCS-VLV-131A EXTERNAL LEAK LARGE	7.2E-08	3.0E+02	2.1E-05
80	RSSXVEL125A	NCS-VLV-125A EXTERNAL LEAK LARGE	7.2E-08	3.0E+02	2.1E-05
81	RSSXVEL128A	NCS-VLV-128A EXTERNAL LEAK LARGE	7.2E-08	3.0E+02	2.1E-05
82	CHIXVEL312A	NCS-VLV-312A EXTERNAL LEAK LARGE	7.2E-08	3.0E+02	2.1E-05
83	CHIXVEL311A	NCS-VLV-311A EXTERNAL LEAK LARGE	7.2E-08	3.0E+02	2.1E-05
84	CHIXVEL315A	NCS-VLV-315A EXTERNAL LEAK LARGE	7.2E-08	3.0E+02	2.1E-05

Table 19.1-94 Basic Events (Hardware Failure, Human Error) RAW of POS 8-1 for LPSD PRA (Sheet 7 of 61)

Rank	Basic Event ID	Basic Event Description	Basic Event Probability	RAW	FV Importance
85	CHIXVEL301A	NCS-VLV-301A EXTERNAL LEAK LARGE	7.2E-08	3.0E+02	2.1E-05
86	CWSCF3RHPF001ABC-12	NCS-MHX-001A,B (CCW HX) PLUG / FOUL(CCF)	1.8E-08	2.9E+02	5.2E-06
87	SWSCF3PMBD001ABC-ALL	EWS-MPP-001A,B,C (ESW PUMP) FAIL TO RE-START (CCF)	6.0E-05	2.7E+02	1.6E-02
88	CWSCF3PCBD001ABC-ALL	NCS-MPP-001A,B,C (CCW PUMP) FAIL TO RE-START (CCF)	3.3E-05	2.7E+02	8.7E-03
89	SWSCF3MVOD503ABC-ALL	EWS-MOV-503A,B,C FAIL TO OPEN (CCF)	2.5E-05	2.7E+02	6.6E-03
90	CWSCF3CVOD016ABC-ALL	NCS-VLV-016A,B,C FAIL TO RE-OPEN (CCF)	3.0E-07	2.6E+02	7.9E-05
91	SWSCF3CVOD502ABC-ALL	EWS-VLV-502A,B,C FAIL TO RE-OPEN (CCF)	3.0E-07	2.6E+02	7.9E-05
92	SWSCF3CVOD602ABC-ALL	EWS-VLV-602A,B,C FAIL TO RE-OPEN (CCF)	3.0E-07	2.6E+02	7.9E-05
93	RWSXVEL024	RWS-VLV-024 EXTERNAL LEAK LARGE	7.2E-08	1.9E+02	1.4E-05
94	RWSTNEL001	RWS-MCP-001 (RWSP) EXTERNAL LEAK LARGE	4.8E-08	1.9E+02	9.2E-06
95	RWSCVEL023	RWS-VLV-023 EXTERNAL LEAK LARGE	4.8E-08	1.9E+02	9.2E-06
96	RWSPNELPIPE1	RWS PIPING BETWEEN RWSP AND RWS-VLV-023 EXTERNAL LEAK LARGE	6.0E-10	1.9E+02	1.2E-07
97	RWSXVEL001	RWS-VLV-001 EXTERNAL LEAK LARGE	7.2E-08	1.9E+02	1.4E-05
98	RSSPNEL01B	CSS PIPING BETWEEN RWSP AND CSS-MOV-001B EXTERNAL LEAK LARGE	2.9E-08	1.9E+02	5.4E-06

Table 19.1-94 Basic Events (Hardware Failure, Human Error) RAW of POS 8-1 for LPSD PRA (Sheet 8 of 61)

Rank	Basic Event ID	Basic Event Description	Basic Event Probability	RAW	FV Importance
99	RSSPNEL01D	CSS PIPING BETWEEN RWSP AND CSS-MOV-001D EXTERNAL LEAK LARGE	2.9E-08	1.9E+02	5.4E-06
100	RSSPNEL01A	CSS PIPING BETWEEN RWSP AND CSS-MOV-001A EXTERNAL LEAK LARGE	2.8E-08	1.9E+02	5.4E-06
101	RSSPNEL01C	CSS PIPING BETWEEN RWSP AND CSS-MOV-001C EXTERNAL LEAK LARGE	2.8E-08	1.9E+02	5.4E-06
102	HPIPNELSUCTSA	SIS A-SI PUMP SUCTION LINE (INSIDE C/V) PIPING EXTERNAL LEAK LARGE	2.8E-08	1.9E+02	5.3E-06
103	HPIPNELSUCTSC	SIS C-SI PUMP SUCTION LINE (INSIDE C/V) PIPING EXTERNAL LEAK LARGE	2.8E-08	1.9E+02	5.3E-06
104	HPIPNELSUCTSD	SIS D-SI PUMP SUCTION LINE (INSIDE C/V) PIPING EXTERNAL LEAK LARGE	2.8E-08	1.9E+02	5.3E-06
105	HPIPNELSUCTSB	SIS B-SI PUMP SUCTION LINE (INSIDE C/V) PIPING EXTERNAL LEAK LARGE	2.8E-08	1.9E+02	5.3E-06
106	RWSMVEL002	RWS-MOV-002 EXTERNAL LEAK LARGE	2.4E-08	1.9E+02	4.5E-06
107	HPIMVEL001C	SIS-MOV-001C EXTERNAL LEAK LARGE	2.4E-08	1.9E+02	4.5E-06
108	HPIMVEL001A	SIS-MOV-001A EXTERNAL LEAK LARGE	2.4E-08	1.9E+02	4.5E-06
109	HPIMVEL001D	SIS-MOV-001D EXTERNAL LEAK LARGE	2.4E-08	1.9E+02	4.5E-06
110	HPIMVEL001B	SIS-MOV-001B EXTERNAL LEAK LARGE	2.4E-08	1.9E+02	4.5E-06
111	RSSMVELCSS001D	CSS-MOV-001D EXTERNAL LEAK LARGE	2.4E-08	1.9E+02	4.5E-06
112	RSSMVELCSS001C	CSS-MOV-001C EXTERNAL LEAK LARGE	2.4E-08	1.9E+02	4.5E-06

Table 19.1-94 Basic Events (Hardware Failure, Human Error) RAW of POS 8-1 for LPSD PRA (Sheet 9 of 61)

Rank	Basic Event ID	Basic Event Description	Basic Event Probability	RAW	FV Importance
113	RSSMVELCSS001A	CSS-MOV-001A EXTERNAL LEAK LARGE	2.4E-08	1.9E+02	4.5E-06
114	RSSMVELCSS001B	CSS-MOV-001B EXTERNAL LEAK LARGE	2.4E-08	1.9E+02	4.5E-06
115	RWSPNELPIPE2	RWS PIPING BETWEEN RWSP AND RWS-VLV-002 EXTERNAL LEAK LARGE	6.0E-10	1.5E+02	9.0E-08
116	SGNBTSWCCF1	GROUP-1 APPLICATION SOFTWARE CCF	1.0E-04	1.2E+02	1.2E-02
117	EPSCBFO52UAT-ACD	EPS 52/UATA,C,D (BREAKER) FAIL TO OPEN (CCF)	5.2E-06	1.2E+02	6.0E-04
118	EPSCBFO52RAT-ACD	EPS 52/RATA,C,D (BREAKER) FAIL TO OPEN (CCF)	5.2E-06	1.2E+02	6.0E-04
119	EPSCBFO52UAT-AC	EPS 52/UATA,C (BREAKER) FAIL TO OPEN (CCF)	5.0E-06	1.2E+02	5.8E-04
120	EPSCBFO52RAT-AC	EPS 52/RATA,C (BREAKER) FAIL TO OPEN (CCF)	5.0E-06	1.2E+02	5.8E-04
121	EPSCF4CBSC52RAT-24	EPS 52/RATA,C (BREAKER) SPURIOUS CLOSE (CCF)	3.4E-08	1.2E+02	3.9E-06
122	EPSCF4CBSC52UAT-13	EPS 52/UATA,C (BREAKER) SPURIOUS CLOSE (CCF)	3.4E-08	1.2E+02	3.9E-06
123	EPSCF4CBSC52RAT-234	EPS 52/RATA,C,D (BREAKER) SPURIOUS CLOSE (CCF)	2.9E-08	1.2E+02	3.4E-06
124	EPSCF4CBSC52UAT-134	EPS 52/UATA,C,D (BREAKER) SPURIOUS CLOSE (CCF)	2.9E-08	1.2E+02	3.4E-06
125	CHIOO02P	(HE) FAIL TO START STANDBY CHARGING PUMP	2.6E-03	1.1E+02	2.9E-01
126	RSSRIEL001C	RHS-MHX-001C (C-CS/RHR HX) TUBE EXTERNAL LEAK LARGE	7.2E-07	9.3E+01	6.6E-05

Table 19.1-94 Basic Events (Hardware Failure, Human Error) RAW of POS 8-1 for LPSD PRA (Sheet 10 of 61)

Rank	Basic Event ID	Basic Event Description	Basic Event Probability	RAW	FV Importance
127	RSSPNEL04C	RHS C-CS/RHR PUMP LINE PIPING EXTERNAL LEAK LARGE	2.6E-07	9.3E+01	2.4E-05
128	RSSPMEL001C	RHS-MPP-001C (C-CS/RHR PUMP) EXTERNAL LEAK LARGE	1.9E-07	9.3E+01	1.8E-05
129	RSSXVEL002C	CSS-VLV-002C EXTERNAL LEAK LARGE	7.2E-08	9.3E+01	6.6E-06
130	RSSXVEL013C	RHS-VLV-013C EXTERNAL LEAK LARGE	7.2E-08	9.3E+01	6.6E-06
131	RSSPNEL05C	RHS RHR OPERATION SUCTION LINE C (OUTSIDE C/V) PIPING EXTERNAL LEAK LARGE	5.8E-08	9.3E+01	5.3E-06
132	RSSCVEL004C	RHS-VLV-004C EXTERNAL LEAK LARGE	4.8E-08	9.3E+01	4.4E-06
133	RSSPNEL12C	RHS-FCV-031 LINE PIPING EXTERNAL LEAK LARGE	2.6E-08	9.3E+01	2.3E-06
134	RSSMVEL004C	CSS-MOV-004C EXTERNAL LEAK LARGE	2.4E-08	9.3E+01	2.2E-06
135	RSSMVEL021C	RHS-MOV-021C EXTERNAL LEAK LARGE	2.4E-08	9.3E+01	2.2E-06
136	RSSAVEL033	RHS-HCV-033 EXTERNAL LEAK LARGE	2.2E-08	9.3E+01	2.0E-06
137	RSSAVEL031	RHS-FCV-031 EXTERNAL LEAK LARGE	2.2E-08	9.3E+01	2.0E-06
138	RSSPNEL03C	CSS PIPING BETWEEN CSS-MOV-001C AND C-CS/RHR PUMP EXTERNAL LEAK LARGE	6.7E-09	9.3E+01	6.1E-07
139	RSSPNEL08C	RHS ALTERNATE CORE COOLING LINE C (OUTSIDE C/V) PIPING EXTERNAL LEAK LARGE	1.8E-09	9.3E+01	1.6E-07
140	RSSOO02P	(HE) FAIL TO RE-START THE RHR PUMPS WHEN THE LOOP EVENT OCCURS	2.6E-03	7.8E+01	2.0E-01

Table 19.1-94 Basic Events (Hardware Failure, Human Error) RAW of POS 8-1 for LPSD PRA (Sheet 11 of 61)

Rank	Basic Event ID	Basic Event Description	Basic Event Probability	RAW	FV Importance
141	EPSCBFO52RAT-ABD	EPS 52/RATA,B,D (BREAKER) FAIL TO OPEN (CCF)	5.2E-06	7.7E+01	3.9E-04
142	EPSCBFO52UAT-ABD	EPS 52/UATA,B,D (BREAKER) FAIL TO OPEN (CCF)	5.2E-06	7.7E+01	3.9E-04
143	EPSCF4CBSC52RAT-134	EPS 52/RATA,B,D (BREAKER) SPURIOUS CLOSE (CCF)	2.9E-08	7.7E+01	2.2E-06
144	EPSCF4CBSC52UAT-124	EPS 52/UATA,B,D (BREAKER) SPURIOUS CLOSE (CCF)	2.9E-08	7.7E+01	2.2E-06
145	EPSCBFO52RAT-AB	EPS 52/RATA,B (BREAKER) FAIL TO OPEN (CCF)	5.0E-06	7.7E+01	3.8E-04
146	EPSCBFO52UAT-AB	EPS 52/UATA,B (BREAKER) FAIL TO OPEN (CCF)	5.0E-06	7.7E+01	3.8E-04
147	EPSCF4CBSC52UAT-12	EPS 52/UATA,B (BREAKER) SPURIOUS CLOSE (CCF)	3.4E-08	7.7E+01	2.5E-06
148	EPSCF4CBSC52RAT-14	EPS 52/RATA,B (BREAKER) SPURIOUS CLOSE (CCF)	3.4E-08	7.7E+01	2.5E-06
149	EPSCF3DLLRGTG-ALL	CLASS-1E GTG A,B,C FAIL TO LOAD AND RUN AFTER FIRST HOUR OF OPERATION (CCF)	1.1E-03	6.1E+01	6.7E-02
150	EPSCF3DLADGTG-ALL	CLASS-1E GTG A,B,C FAIL TO START (CCF)	2.4E-04	6.1E+01	1.4E-02
151	EPSCF3DLSRGTG-ALL	CLASS-1E GTG A,B,C FAIL TO LOAD AND RUN DURING FIRST HOUR OF OPERATION (CCF)	1.8E-04	6.1E+01	1.1E-02
152	EPSCF3SEFFGTG-ALL	CLASS-1E GTG A,B,C SEQUENCER FAIL TO OPERATE (CCF)	7.5E-05	6.1E+01	4.5E-03
153	EPSCF3CBTD52EPS-ALL	EPS 52/EPSA,B,C (BREAKER) FAIL TO CLOSE (CCF)	2.0E-05	6.1E+01	1.2E-03
154	EPSCF3CBSO52EPS-ALL	EPS 52/EPSA,B,C (BREAKER) SPURIOUS OPEN (CCF)	2.1E-07	6.1E+01	1.2E-05

Table 19.1-94 Basic Events (Hardware Failure, Human Error) RAW of POS 8-1 for LPSD PRA (Sheet 12 of 61)

Rank	Basic Event ID	Basic Event Description	Basic Event Probability	RAW	FV Importance
155	EPSCF4IVFFIBC-ALL	CLASS-1E UPS UNIT A,B,C,D FAIL TO OPERATE (CCF)	1.5E-06	6.1E+01	9.0E-05
156	EPSCF4CBSO72AU-ALL	EPS 72/AUA,B,C,D (BREAKER) SPURIOUS OPEN (CCF)	1.6E-07	6.1E+01	9.4E-06
157	EPSCF4CBSO52UA-ALL	EPS 52/UAA,B,C,D (BREAKER) SPURIOUS OPEN (CCF)	1.6E-07	6.1E+01	9.4E-06
158	EPSCF4IVFFIBC-123	CLASS-1E UPS UNIT A,B,C FAIL TO OPERATE (CCF)	5.0E-07	6.1E+01	3.0E-05
159	EPSCF4CBSO72AU-123	EPS 72/AUA,B,C (BREAKER) SPURIOUS OPEN (CCF)	2.9E-08	6.1E+01	1.7E-06
160	EPSCF4CBSO52UA-124	EPS 52/UAA,B,C(BREAKER) SPURIOUS OPEN (CCF)	2.9E-08	6.1E+01	1.7E-06
161	EPSCF4CBSO72DB-ALL	EPS 72/DBA,B,C,D (BREAKER) SPURIOUS OPEN (CCF)	1.6E-07	6.1E+01	9.4E-06
162	EPSCF4BYFFBAT-ALL	A,B,C,D CLASS-1E BATTERY FAIL TO OPERATE (CCF)	5.0E-08	6.1E+01	3.0E-06
163	EPSCF4CBSO72DB-124	EPS 72/DBA,B,C (BREAKER) SPURIOUS OPEN (CCF)	2.9E-08	5.8E+01	1.7E-06
164	EPSCF4BYFFBAT-124	A,B,C CLASS-1E BATTERY FAIL TO OPERATE (CCF)	1.2E-08	5.8E+01	7.1E-07
165	CWSCF3RHPF001ABC-23	NCS-MHX-001B,C (CCW HX) PLUG / FOUL(CCF)	1.8E-08	5.2E+01	9.2E-07
166	EPSBSFFMCA	A-CLASS 1E 6.9KV SWITCHGEAR FAILURE	5.8E-06	3.3E+01	1.8E-04
167	EPSBSFFDCCA	A-CLASS 1E DC SWITCHBOARD	5.8E-06	3.3E+01	1.8E-04
168	EPSCF4CBSO52STH-14	EPS 52/STHA,D (BREAKER) SPURIOUS OPEN (CCF)	3.4E-08	3.1E+01	1.0E-06

Table 19.1-94 Basic Events (Hardware Failure, Human Error) RAW of POS 8-1 for LPSD PRA (Sheet 13 of 61)

Rank	Basic Event ID	Basic Event Description	Basic Event Probability	RAW	FV Importance
169	EPSCF4CBSO52STL-34	EPS 52/STLA,D (BREAKER) SPURIOUS OPEN (CCF)	3.4E-08	3.1E+01	1.0E-06
170	CWSCF3PCBD001ABC-23	NCS-MPP-001B,C (CCW PUMP) FAIL TO RE-START (CCF)	4.4E-05	2.7E+01	1.1E-03
171	SWSCF3MVOD503ABC-23	EWS-MOV-503B,C FAIL TO OPEN (CCF)	1.3E-05	2.7E+01	3.2E-04
172	EPSCBFO52RAT-ALL	EPS 52/RATA,B,C,D (BREAKER) FAIL TO OPEN (CCF)	2.0E-05	2.7E+01	5.2E-04
173	EPSCBFO52UAT-ALL	EPS 52/UATA,B,C,D (BREAKER) FAIL TO OPEN (CCF)	2.0E-05	2.7E+01	5.2E-04
174	CWSCF3CVOD016ABC-12	NCS-VLV-016B,C FAIL TO RE-OPEN (CCF)	1.5E-07	2.5E+01	3.6E-06
175	SWSCF3CVOD602ABC-23	EWS-VLV-602B,C FAIL TO RE-OPEN (CCF)	1.5E-07	2.5E+01	3.6E-06
176	SWSCF3CVOD502ABC-12	EWS-VLV-502B,C FAIL TO RE-OPEN (CCF)	1.5E-07	2.5E+01	3.6E-06
177	EPSTRFF001A	A-CLASS 1E 6.9KV-480V STATION SERVICE TRANSFORMER FAIL TO OPERATE	8.2E-06	2.5E+01	1.9E-04
178	EPSBSFFLCA	A-CLASS 1E LOAD CENTER FAILURE	5.8E-06	2.5E+01	1.4E-04
179	EPSCBSO52STLA	EPS 52/STLA (BREAKER) SPURIOUS OPEN	3.0E-06	2.4E+01	7.1E-05
180	EPSCBSO52STHA	EPS 52/STHA (BREAKER) SPURIOUS OPEN	3.0E-06	2.4E+01	7.1E-05
181	EPSBSFFMCCA	A-CLASS 1E 480V MCC FAILURE	5.8E-06	2.4E+01	1.3E-04
182	EPSCBSO52LCA	EPS 52/LCA (BREAKER) SPURIOUS OPEN	3.0E-06	2.4E+01	7.0E-05

Table 19.1-94 Basic Events (Hardware Failure, Human Error) RAW of POS 8-1 for LPSD PRA (Sheet 14 of 61)

Rank	Basic Event ID	Basic Event Description	Basic Event Probability	RAW	FV Importance
183	EPSCF4CBSO52LC-23	EPS 52/LCB,C (BREAKER) SPURIOUS OPEN (CCF)	3.4E-08	2.2E+01	7.2E-07
184	EPSCF4CBSO52STL-12	EPS 52/STLB,C (BREAKER) SPURIOUS OPEN (CCF)	3.4E-08	2.2E+01	7.2E-07
185	EPSCF4CBSO52STH-23	EPS 52/STHB,C (BREAKER) SPURIOUS OPEN (CCF)	3.4E-08	2.2E+01	7.2E-07
186	EPSCF4CBSO52STL-123	EPS 52/STLB,C,D (BREAKER) SPURIOUS OPEN (CCF)	2.9E-08	2.2E+01	6.3E-07
187	EPSCF4CBSO52LC-234	EPS 52/LCB,C,D (BREAKER) SPURIOUS OPEN (CCF)	2.9E-08	2.2E+01	6.3E-07
188	EPSCF4CBSO52STH-234	EPS 52/STHB,C,D (BREAKER) SPURIOUS OPEN (CCF)	2.9E-08	2.2E+01	6.3E-07
189	SWSCF3PMBD001ABC-23	EWS-MPP-001B,C (ESW PUMP) FAIL TO RE-START (CCF)	7.9E-05	2.2E+01	1.7E-03
190	HPICF2PMAD001AC-ALL	SIS-MPP-001A,C (SI PUMP) FAIL TO START (CCF)	1.5E-04	2.0E+01	2.9E-03
191	HPICF2PMSR001AC-ALL	SIS-MPP-001A,C (SI PUMP) FAIL TO RUN DURING FIRST HOUR OF OPERATION (CCF)	1.7E-05	2.0E+01	3.2E-04
192	RWSCF4SUPR001-ALL	SIS-SST-001A,B,C,D (ESS/CS STRAINER) PLUG DURING OPERATION (CCF)	9.7E-06	2.0E+01	1.9E-04
193	HPICF2PMLR001AC-ALL	SIS-MPP-001A,C (SI PUMP) FAIL TO RUN AFTER FIRST HOUR OF OPERATION (CCF)	5.7E-06	2.0E+01	1.1E-04
194	RWSCF4SUPR001-124	SIS-SST-001A,C,D (ESS/CS STRAINER) PLUG DURING OPERATION (CCF)	3.7E-06	2.0E+01	7.0E-05
195	RWSCF4SUPR001-134	SIS-SST-001A,B,C (ESS/CS STRAINER) PLUG DURING OPERATION (CCF)	3.7E-06	2.0E+01	7.0E-05
196	RWSCF4SUPR001-14	SIS-SST-001A,C (ESS/CS STRAINER) PLUG DURING OPERATION (CCF)	3.0E-06	2.0E+01	5.7E-05

Table 19.1-94 Basic Events (Hardware Failure, Human Error) RAW of POS 8-1 for LPSD PRA (Sheet 15 of 61)

Rank	Basic Event ID	Basic Event Description	Basic Event Probability	RAW	FV Importance
197	HPICF2CVOD004AC-ALL	SIS-VLV-004A,C FAIL TO OPEN (CCF)	2.0E-06	2.0E+01	3.8E-05
198	HPICF2CVOD012AC-ALL	SIS-VLV-012A,C FAIL TO OPEN (CCF)	2.0E-06	2.0E+01	3.8E-05
199	HPICF2CVOD013AC-ALL	SIS-VLV-013A,C FAIL TO OPEN (CCF)	2.0E-06	2.0E+01	3.8E-05
200	HPICF2CVOD010AC-ALL	SIS-VLV-010A,C FAIL TO OPEN (CCF)	2.0E-06	2.0E+01	3.8E-05
201	EPSCF4CBSO52LC-14	EPS 52/LCA,D (BREAKER) SPURIOUS OPEN (CCF)	3.4E-08	2.0E+01	6.3E-07
202	HPIOO02S	(HE) FAIL TO START STANDBY SAFETY INJECTION PUMP	4.9E-03	2.0E+01	9.1E-02
203	LOAOO02LC	(HE) FAIL TO ISOLATE THE LEAKAGE TRAIN OF RHR SYSTEM	2.6E-03	1.9E+01	4.6E-02
204	SWSSTPRST003A	EWS-SST-003A (STRAINER) PLUG	1.7E-04	1.9E+01	3.0E-03
205	SWSPMYR001A-ABC	EWS-MPP-001A (A-EWS PUMP) FAIL TO RUN	1.2E-04	1.9E+01	2.2E-03
206	SWSORPR001A	EWS-SRO-001A (ORIFICE) PLUG	2.4E-05	1.9E+01	4.3E-04
207	SWSORPR034	EWS-FE-034 (ORIFICE) PLUG	2.4E-05	1.9E+01	4.3E-04
208	CWSORPR040	NCS-FE-040 (ORIFICE) PLUG	2.4E-05	1.9E+01	4.3E-04
209	SWSPEELSWPA1	EWS A-EWS PUMP DISCHARGE LINE PIPING EXTERNAL LEAK LARGE	3.9E-06	1.9E+01	7.0E-05
210	SWSXVPR517A	EWS-VLV-517A PLUG	2.4E-06	1.9E+01	4.3E-05

Table 19.1-94 Basic Events (Hardware Failure, Human Error) RAW of POS 8-1 for LPSD PRA (Sheet 16 of 61)

Rank	Basic Event ID	Basic Event Description	Basic Event Probability	RAW	FV Importance
211	CWSXVPR018A	NCS-VLV-018A PLUG	2.4E-06	1.9E+01	4.3E-05
212	SWSXVPR511A	EWS-VLV-511A PLUG	2.4E-06	1.9E+01	4.3E-05
213	CWSCVPR016A	NCS-VLV-016A PLUG	2.4E-06	1.9E+01	4.3E-05
214	CWSXVPR101A	NCS-VLV-101A PLUG	2.4E-06	1.9E+01	4.3E-05
215	SWSXVPR508A	EWS-VLV-508A PLUG	2.4E-06	1.9E+01	4.3E-05
216	SWSXVPR506A	EWS-VLV-506A PLUG	2.4E-06	1.9E+01	4.3E-05
217	SWSXVPR520A	EWS-VLV-520A PLUG	2.4E-06	1.9E+01	4.3E-05
218	SWSMVPR503A	EWS-MOV-503A PLUG	2.4E-06	1.9E+01	4.3E-05
219	CWSXVPR104A	NCS-VLV-104A PLUG	2.4E-06	1.9E+01	4.3E-05
220	SWSCVPR502A	EWS-VLV-502A PLUG	2.4E-06	1.9E+01	4.3E-05
221	CWSXVPR008A	NCS-VLV-008A PLUG	2.4E-06	1.9E+01	4.3E-05
222	SWSXVPR514A	EWS-VLV-514A PLUG	2.4E-06	1.9E+01	4.3E-05
223	SWSMVCM503A	EWS-MOV-503A SPURIOUS CLOSE	9.6E-07	1.9E+01	1.7E-05
224	CWSRIEL001A2	NCS-MHX-001A (A-CCW HX) TUBE EXTERNAL LEAK LARGE	7.2E-07	1.9E+01	1.3E-05

Table 19.1-94 Basic Events (Hardware Failure, Human Error) RAW of POS 8-1 for LPSD PRA (Sheet 17 of 61)

Rank	Basic Event ID	Basic Event Description	Basic Event Probability	RAW	FV Importance
225	SWSPEELSWSA3	EWS A-CCW HX COOLING LINE PIPING EXTERNAL LEAK LARGE	2.1E-07	1.9E+01	3.8E-06
226	SWSPMEL001A	EWS-MPP-001A (A-ESW PUMP) EXTERNAL LEAK LARGE	1.9E-07	1.9E+01	3.5E-06
227	SWSXVEL511A	EWS-VLV-511A EXTERNAL LEAK LARGE	7.2E-08	1.9E+01	1.3E-06
228	SWSXVEL514A	EWS-VLV-514A EXTERNAL LEAK LARGE	7.2E-08	1.9E+01	1.3E-06
229	SWSXVEL506A	EWS-VLV-506A EXTERNAL LEAK LARGE	7.2E-08	1.9E+01	1.3E-06
230	SWSXVEL509A	EWS-VLV-509A EXTERNAL LEAK LARGE	7.2E-08	1.9E+01	1.3E-06
231	SWSXVEL508A	EWS-VLV-508A EXTERNAL LEAK LARGE	7.2E-08	1.9E+01	1.3E-06
232	SWSXVEL507A	EWS-VLV-507A EXTERNAL LEAK LARGE	7.2E-08	1.9E+01	1.3E-06
233	SWSCVEL502A	EWS-VLV-502A EXTERNAL LEAK LARGE	4.8E-08	1.9E+01	8.6E-07
234	SWSMVEL503A	EWS-MOV-503A EXTERNAL LEAK LARGE	2.4E-08	1.9E+01	4.3E-07
235	CWSPCYR001A-ABC	NCS-MPP-001A (A-CCW PUMP) FAIL TO RUN	6.7E-05	1.9E+01	1.2E-03
236	RSSOO02LINE+P	(HE) FAIL TO ESTABLISH RHR INJECTION LINE AND START STANDBY PUMP	3.8E-03	1.9E+01	6.8E-02
237	SWSFMPR070	EWS-FT-070 (FLOW METER) PLUG	2.4E-05	1.9E+01	4.3E-04
238	SWSORPR002A	EWS-SRO-002A (ORIFICE) PLUG	2.4E-05	1.9E+01	4.3E-04

Table 19.1-94 Basic Events (Hardware Failure, Human Error) RAW of POS 8-1 for LPSD PRA (Sheet 18 of 61)

Rank	Basic Event ID	Basic Event Description	Basic Event Probability	RAW	FV Importance
239	SWSXVPR601A	EWS-VLV-601A PLUG	2.4E-06	1.9E+01	4.3E-05
240	SWSCVPR602A	EWS-VLV-602A PLUG	2.4E-06	1.9E+01	4.3E-05
241	SWSPEELSWSA2	EWS A-EWS PUMP COOLING LINE PIPING EXTERNAL LEAK LARGE	3.8E-07	1.9E+01	6.7E-06
242	SWSXVEL601A	EWS-VLV-601A EXTERNAL LEAK LARGE	7.2E-08	1.9E+01	1.3E-06
243	SWSCVEL602A	EWS-VLV-602A EXTERNAL LEAK LARGE	4.8E-08	1.9E+01	8.6E-07
244	CWSRHPF001A1-ABC	NCS-MHX-001A (A-CCW HX) PLUG / FOUL	1.4E-06	1.9E+01	2.4E-05
245	CHIPMYR001A	CVS-MPP-001A (A-CHI PUMP) FAIL TO RUN	1.2E-04	1.8E+01	2.1E-03
246	CHIORPR002A	CVS-SRO-002A (ORIFICE) PLUG	2.4E-05	1.8E+01	4.1E-04
247	CHICVOD129A	CVS-VLV-129A FAIL TO OPEN	1.2E-05	1.8E+01	2.1E-04
248	CHICVOD131A	CVS-VLV-131A FAIL TO OPEN	1.2E-05	1.8E+01	2.1E-04
249	CHICVPR131A	CVS-VLV-131A PLUG	2.4E-06	1.8E+01	4.1E-05
250	CHIXVPR126A	CVS-VLV-126A PLUG	2.4E-06	1.8E+01	4.1E-05
251	CHIXVPR132A	CVS-VLV-132A PLUG	2.4E-06	1.8E+01	4.1E-05
252	CHIXVPR130A	CVS-VLV-130A PLUG	2.4E-06	1.8E+01	4.1E-05

Table 19.1-94 Basic Events (Hardware Failure, Human Error) RAW of POS 8-1 for LPSD PRA (Sheet 19 of 61)

Rank	Basic Event ID	Basic Event Description	Basic Event Probability	RAW	FV Importance
253	CHICVPR129A	CVS-VLV-129A PLUG	2.4E-06	1.8E+01	4.1E-05
254	CHIORPRCCW070	NCS-FE-070 (ORIFICE) PLUG	2.4E-05	1.8E+01	4.1E-04
255	CHIORPRCCW076	NCS-FE-076 (ORIFICE) PLUG	2.4E-05	1.8E+01	4.1E-04
256	CHIXVPR311A	NCS-VLV-311A PLUG	2.4E-06	1.8E+01	4.1E-05
257	CHIXVPR312A	NCS-VLV-312A PLUG	2.4E-06	1.8E+01	4.1E-05
258	CHIXVPR301A	NCS-VLV-301A PLUG	2.4E-06	1.8E+01	4.1E-05
259	CHIXVPR315A	NCS-VLV-315A PLUG	2.4E-06	1.8E+01	4.1E-05
260	EPSBSFFDCCA1	A1-CLASS 1E DC SWITCHBOARD	5.8E-06	1.8E+01	9.9E-05
261	EPSCBSO72DDAA	EPS 72/DDAA (BREAKER) SPURIOUS OPEN	3.0E-06	1.8E+01	5.1E-05
262	EPSCBSO72DDDA	EPS 72/DDDA (BREAKER) SPURIOUS OPEN	3.0E-06	1.8E+01	5.1E-05
263	EPSCF4CBSO72DD1-34	EPS 72/DDAA,BC (BREAKER) SPURIOUS OPEN (CCF)	3.4E-08	1.8E+01	5.7E-07
264	EPSCF4CBSO72DD2-24	EPS 72/DDDA,BD (BREAKER) SPURIOUS OPEN (CCF)	3.4E-08	1.8E+01	5.7E-07
265	EPSCF4CBSO72DD1-24	EPS 72/DDAA,BB (BREAKER) SPURIOUS OPEN (CCF)	3.4E-08	1.8E+01	5.7E-07
266	EPSCF4CBSO72DD2-14	EPS 72/DDDA,BA (BREAKER) SPURIOUS OPEN (CCF)	3.4E-08	1.8E+01	5.7E-07

Table 19.1-94 Basic Events (Hardware Failure, Human Error) RAW of POS 8-1 for LPSD PRA (Sheet 20 of 61)

Rank	Basic Event ID	Basic Event Description	Basic Event Probability	RAW	FV Importance
267	EPSCF4CBSO72DD1-234	EPS 72/DDAA,BB,BC (BREAKER) SPURIOUS OPEN (CCF)	2.9E-08	1.8E+01	5.0E-07
268	EPSCF4CBSO72DD2-124	EPS 72/DDDA,BA,BD (BREAKER) SPURIOUS OPEN (CCF)	2.9E-08	1.8E+01	5.0E-07
269	EPSCF4CBSO72DD1-ALL	EPS 72/DDAA,BB,BC,AD (BREAKER) SPURIOUS OPEN (CCF)	1.6E-07	1.8E+01	2.7E-06
270	EPSCF4CBSO72DD2-ALL	EPS 72/DDDA,BA,BD,DD (BREAKER) SPURIOUS OPEN (CCF)	1.6E-07	1.8E+01	2.7E-06
271	EPSCF4CBSO72DD2-34	EPS 72/DDDA,DD (BREAKER) SPURIOUS OPEN (CCF)	3.4E-08	1.8E+01	5.7E-07
272	EPSCF4CBSO72DD1-14	EPS 72/DDAA,AD (BREAKER) SPURIOUS OPEN (CCF)	3.4E-08	1.8E+01	5.7E-07
273	EPSCF4CBSO72DD1-134	EPS 72/DDAA,BC,AD (BREAKER) SPURIOUS OPEN (CCF)	2.9E-08	1.8E+01	4.9E-07
274	EPSCF4CBSO72DD2-234	EPS 72/DDDA,BD,DD (BREAKER) SPURIOUS OPEN (CCF)	2.9E-08	1.8E+01	4.9E-07
275	EPSCF4CBSO72DD2-134	EPS 72/DDDA,BA,DD (BREAKER) SPURIOUS OPEN (CCF)	2.9E-08	1.8E+01	4.9E-07
276	EPSCF4CBSO72DD1-124	EPS 72/DDAA,BB,AD (BREAKER) SPURIOUS OPEN (CCF)	2.9E-08	1.8E+01	4.9E-07
277	CWSCF3PCBD001ABC-13	NCS-MPP-001A,C (CCW PUMP) FAIL TO RE-START (CCF)	4.4E-05	1.7E+01	7.1E-04
278	SWSCF3MVOD503ABC-13	EWS-MOV-503A,C FAIL TO OPEN (CCF)	1.3E-05	1.7E+01	2.0E-04
279	SWSCF3PMBD001ABC-12	EWS-MPP-001A,B (ESW PUMP) FAIL TO RE-START (CCF)	7.9E-05	1.7E+01	1.3E-03
280	CWSCF3PCBD001ABC-12	NCS-MPP-001A,B (CCW PUMP) FAIL TO RE-START (CCF)	4.4E-05	1.7E+01	7.0E-04

Table 19.1-94 Basic Events (Hardware Failure, Human Error) RAW of POS 8-1 for LPSD PRA (Sheet 21 of 61)

Rank	Basic Event ID	Basic Event Description	Basic Event Probability	RAW	FV Importance
281	SWSCF3MVOD503ABC-12	EWS-MOV-503A,B FAIL TO OPEN (CCF)	1.3E-05	1.7E+01	2.0E-04
282	CWSCF3CVOD016ABC-23	NCS-VLV-016A,C FAIL TO RE-OPEN (CCF)	1.5E-07	1.5E+01	2.1E-06
283	SWSCF3CVOD502ABC-23	EWS-VLV-502A,C FAIL TO RE-OPEN (CCF)	1.5E-07	1.5E+01	2.1E-06
284	SWSCF3CVOD602ABC-12	EWS-VLV-602A,C FAIL TO RE-OPEN (CCF)	1.5E-07	1.5E+01	2.1E-06
285	SWSCF3CVOD602ABC-13	EWS-VLV-602A,B FAIL TO RE-OPEN (CCF)	1.5E-07	1.5E+01	2.0E-06
286	SWSCF3CVOD502ABC-13	EWS-VLV-502A,B FAIL TO RE-OPEN (CCF)	1.5E-07	1.5E+01	2.0E-06
287	CWSCF3CVOD016ABC-13	NCS-VLV-016A,B FAIL TO RE-OPEN (CCF)	1.5E-07	1.5E+01	2.0E-06
288	CHICF2MVCD031BC-ALL	CVS-LCV-031B,C FAIL TO CLOSE (CCF)	1.4E-04	1.4E+01	1.7E-03
289	CHICF4MVOD031-ALL	CVS-LCV-031D,E,F,G FAIL TO OPEN (CCF)	1.1E-04	1.4E+01	1.4E-03
290	CHIAVFC048	CVS-FCV-048 FAIL TO CONTROL	7.2E-05	1.4E+01	9.1E-04
291	CHIORPR048	CVS-FE-048 (ORIFICE) PLUG	2.4E-05	1.4E+01	3.0E-04
292	CHIORPR003	CVS-SRO-003 (ORIFICE) PLUG	2.4E-05	1.4E+01	3.0E-04
293	CHIAVCM146	CVS-AOV-146 SPURIOUS CLOSE	4.8E-06	1.4E+01	6.0E-05
294	CHIAVCM048	CVS-FCV-048 SPURIOUS CLOSE	4.8E-06	1.4E+01	6.0E-05

Table 19.1-94 Basic Events (Hardware Failure, Human Error) RAW of POS 8-1 for LPSD PRA (Sheet 22 of 61)

Rank	Basic Event ID	Basic Event Description	Basic Event Probability	RAW	FV Importance
295	CHIAVCM159	CVS-AOV-159 SPURIOUS CLOSE	4.8E-06	1.4E+01	6.0E-05
296	CHIAVPR146	CVS-AOV-146 PLUG	2.4E-06	1.4E+01	3.0E-05
297	CHIAVPR159	CVS-AOV-159 PLUG	2.4E-06	1.4E+01	3.0E-05
298	CHIAVPR048	CVS-FCV-048 PLUG	2.4E-06	1.4E+01	3.0E-05
299	CHIMVPR151	CVS-MOV-151 PLUG	2.4E-06	1.4E+01	3.0E-05
300	CHIMVPR152	CVS-MOV-152 PLUG	2.4E-06	1.4E+01	3.0E-05
301	CHICVPR153	CVS-VLV-153 PLUG	2.4E-06	1.4E+01	3.0E-05
302	CHICVPR161	CVS-VLV-161 PLUG	2.4E-06	1.4E+01	3.0E-05
303	CHICVPR160	CVS-VLV-160 PLUG	2.4E-06	1.4E+01	3.0E-05
304	CHIXVPR133	CVS-VLV-133 PLUG	2.4E-06	1.4E+01	3.0E-05
305	CHIXVPR145	CVS-VLV-145 PLUG	2.4E-06	1.4E+01	3.0E-05
306	CHIXVPR147	CVS-VLV-147 PLUG	2.4E-06	1.4E+01	3.0E-05
307	CHIMVCM151	CVS-MOV-151 SPURIOUS CLOSE	9.6E-07	1.4E+01	1.2E-05
308	CHIMVCM152	CVS-MOV-152 SPURIOUS CLOSE	9.6E-07	1.4E+01	1.2E-05

Table 19.1-94 Basic Events (Hardware Failure, Human Error) RAW of POS 8-1 for LPSD PRA (Sheet 23 of 61)

Rank	Basic Event ID	Basic Event Description	Basic Event Probability	RAW	FV Importance
309	CHIRIEL001	CVS-MHX-001 (REGENERATIVE HX) TUBE EXTERNAL LEAK LARGE	7.2E-07	1.4E+01	9.1E-06
310	CHIPMEL001A	CVS-MPP-001A (A-CHI PUMP) EXTERNAL LEAK LARGE	1.9E-07	1.4E+01	2.4E-06
311	CHIPMEL001B	CVS-MPP-001B (B-CHI PUMP) EXTERNAL LEAK LARGE	1.9E-07	1.4E+01	2.4E-06
312	CHIAVIL155	CVS-AOV-155 INTERNAL LEAK LARGE	1.2E-07	1.4E+01	1.5E-06
313	CHIXVEL132B	CVS-VLV-132B EXTERNAL LEAK LARGE	7.2E-08	1.4E+01	9.1E-07
314	CHIXVEL126A	CVS-VLV-126A EXTERNAL LEAK LARGE	7.2E-08	1.4E+01	9.1E-07
315	CHIXVEL130B	CVS-VLV-130B EXTERNAL LEAK LARGE	7.2E-08	1.4E+01	9.1E-07
316	CHIXVEL132A	CVS-VLV-132A EXTERNAL LEAK LARGE	7.2E-08	1.4E+01	9.1E-07
317	CHIXVEL126B	CVS-VLV-126B EXTERNAL LEAK LARGE	7.2E-08	1.4E+01	9.1E-07
318	CHIXVEL171B	CVS-VLV-171B EXTERNAL LEAK LARGE	7.2E-08	1.4E+01	9.1E-07
319	CHIXVEL130A	CVS-VLV-130A EXTERNAL LEAK LARGE	7.2E-08	1.4E+01	9.1E-07
320	CHIXVEL163	CVS-VLV-163 EXTERNAL LEAK LARGE	7.2E-08	1.4E+01	9.1E-07
321	CHIXVEL144	CVS-VLV-144 EXTERNAL LEAK LARGE	7.2E-08	1.4E+01	9.1E-07
322	CHIXVEL164	CVS-VLV-164 EXTERNAL LEAK LARGE	7.2E-08	1.4E+01	9.1E-07

Table 19.1-94 Basic Events (Hardware Failure, Human Error) RAW of POS 8-1 for LPSD PRA (Sheet 24 of 61)

Rank	Basic Event ID	Basic Event Description	Basic Event Probability	RAW	FV Importance
323	CHIXVEL147	CVS-VLV-147 EXTERNAL LEAK LARGE	7.2E-08	1.4E+01	9.1E-07
324	CHIXVEL170B	CVS-VLV-170B EXTERNAL LEAK LARGE	7.2E-08	1.4E+01	9.1E-07
325	CHIXVEL133	CVS-VLV-133 EXTERNAL LEAK LARGE	7.2E-08	1.4E+01	9.1E-07
326	CHIXVEL145	CVS-VLV-145 EXTERNAL LEAK LARGE	7.2E-08	1.4E+01	9.1E-07
327	CHIXVEL167	CVS-VLV-167 EXTERNAL LEAK LARGE	7.2E-08	1.4E+01	9.1E-07
328	CHIXVEL173	CVS-VLV-173 EXTERNAL LEAK LARGE	7.2E-08	1.4E+01	9.1E-07
329	CHIXVEL168	CVS-VLV-168 EXTERNAL LEAK LARGE	7.2E-08	1.4E+01	9.1E-07
330	CHIXVEL166	CVS-VLV-166 EXTERNAL LEAK LARGE	7.2E-08	1.4E+01	9.1E-07
331	CHICVEL131A	CVS-VLV-131A EXTERNAL LEAK LARGE	4.8E-08	1.4E+01	6.0E-07
332	CHICVEL125	CVS-VLV-125 EXTERNAL LEAK LARGE	4.8E-08	1.4E+01	6.0E-07
333	CHICVEL129B	CVS-VLV-129B EXTERNAL LEAK LARGE	4.8E-08	1.4E+01	6.0E-07
334	CHICVEL153	CVS-VLV-153 EXTERNAL LEAK LARGE	4.8E-08	1.4E+01	6.0E-07
335	CHICVEL161	CVS-VLV-161 EXTERNAL LEAK LARGE	4.8E-08	1.4E+01	6.0E-07
336	CHICVEL160	CVS-VLV-160 EXTERNAL LEAK LARGE	4.8E-08	1.4E+01	6.0E-07

Table 19.1-94 Basic Events (Hardware Failure, Human Error) RAW of POS 8-1 for LPSD PRA (Sheet 25 of 61)

Rank	Basic Event ID	Basic Event Description	Basic Event Probability	RAW	FV Importance
337	CHICVEL131B	CVS-VLV-131B EXTERNAL LEAK LARGE	4.8E-08	1.4E+01	6.0E-07
338	CHICVEL129A	CVS-VLV-129A EXTERNAL LEAK LARGE	4.8E-08	1.4E+01	6.0E-07
339	CHIMVEL151	CVS-MOV-151 EXTERNAL LEAK LARGE	2.4E-08	1.4E+01	3.0E-07
340	CHIMVEL152	CVS-MOV-152 EXTERNAL LEAK LARGE	2.4E-08	1.4E+01	3.0E-07
341	CHIMVEL031B	CVS-LCV-031B EXTERNAL LEAK LARGE	2.4E-08	1.4E+01	3.0E-07
342	CHIMVEL031C	CVS-LCV-031C EXTERNAL LEAK LARGE	2.4E-08	1.4E+01	3.0E-07
343	CHIAVEL146	CVS-AOV-146 EXTERNAL LEAK LARGE	2.2E-08	1.4E+01	2.7E-07
344	CHIAVEL048	CVS-FCV-048 EXTERNAL LEAK LARGE	2.2E-08	1.4E+01	2.7E-07
345	CHIAVEL050	CVS-FCV-050 EXTERNAL LEAK LARGE	2.2E-08	1.4E+01	2.7E-07
346	CHIAVEL165	CVS-AOV-165 EXTERNAL LEAK LARGE	2.2E-08	1.4E+01	2.7E-07
347	CHIAVEL155	CVS-AOV-155 EXTERNAL LEAK LARGE	2.2E-08	1.4E+01	2.7E-07
348	CHIAVEL159	CVS-AOV-159 EXTERNAL LEAK LARGE	2.2E-08	1.4E+01	2.7E-07
349	CHIPNELPIPE1	CVS CHARGING INJECTION LINE PIPING EXTERNAL LEAK LARGE	6.0E-10	1.4E+01	7.5E-09
350	CHIPMBD001A	CVS-MPP-001A (A-CHI PUMP) FAIL TO START	2.0E-03	1.4E+01	2.5E-02

Table 19.1-94 Basic Events (Hardware Failure, Human Error) RAW of POS 8-1 for LPSD PRA (Sheet 26 of 61)

Rank	Basic Event ID	Basic Event Description	Basic Event Probability	RAW	FV Importance
351	CWSORPR036	NCS-FE-036 (ORIFICE) PLUG	2.4E-05	1.4E+01	3.0E-04
352	CHICF4MVOD031-34	CVS-LCV-031F,G FAIL TO OPEN (CCF)	1.3E-05	1.4E+01	1.7E-04
353	CHICF4MVOD031-23	CVS-LCV-031E,F FAIL TO OPEN (CCF)	1.3E-05	1.4E+01	1.7E-04
354	CHICF4MVOD031-14	CVS-LCV-031D,G FAIL TO OPEN (CCF)	1.3E-05	1.4E+01	1.7E-04
355	CHICF4MVOD031-12	CVS-LCV-031D,E FAIL TO OPEN (CCF)	1.3E-05	1.4E+01	1.7E-04
356	CHICVOD592	CVS-VLV-592 FAIL TO OPEN	1.2E-05	1.4E+01	1.5E-04
357	CHICVOD595	CVS-VLV-595 FAIL TO OPEN	1.2E-05	1.4E+01	1.5E-04
358	CWSXVPR033A	NCS-VLV-033A PLUG	2.4E-06	1.4E+01	3.0E-05
359	CWSXVPR034A	NCS-VLV-034A PLUG	2.4E-06	1.4E+01	3.0E-05
360	CHIXVPR591	CVS-VLV-591 PLUG	2.4E-06	1.4E+01	3.0E-05
361	CHICVPR595	CVS-VLV-595 PLUG	2.4E-06	1.4E+01	3.0E-05
362	CHICVPR592	CVS-VLV-592 PLUG	2.4E-06	1.4E+01	3.0E-05
363	CHIXVEL591	CVS-VLV-591 EXTERNAL LEAK LARGE	7.2E-08	1.4E+01	9.0E-07
364	CHICVEL595	CVS-VLV-595 EXTERNAL LEAK LARGE	4.8E-08	1.4E+01	6.0E-07

Table 19.1-94 Basic Events (Hardware Failure, Human Error) RAW of POS 8-1 for LPSD PRA (Sheet 27 of 61)

Rank	Basic Event ID	Basic Event Description	Basic Event Probability	RAW	FV Importance
365	CHICVEL592	CVS-VLV-592 EXTERNAL LEAK LARGE	4.8E-08	1.4E+01	6.0E-07
366	CHICVEL594	CVS-VLV-594 EXTERNAL LEAK LARGE	4.8E-08	1.4E+01	6.0E-07
367	RWSTNEL002	RWS-MTK-002 (RWSAT) EXTERNAL LEAK LARGE	4.8E-08	1.4E+01	6.0E-07
368	CHIMVEL031F	CVS-LCV-031F EXTERNAL LEAK LARGE	2.4E-08	1.4E+01	3.0E-07
369	CHIMVEL031G	CVS-LCV-031G EXTERNAL LEAK LARGE	2.4E-08	1.4E+01	3.0E-07
370	CHIMVEL031E	CVS-LCV-031E EXTERNAL LEAK LARGE	2.4E-08	1.4E+01	3.0E-07
371	CHIMVEL031D	CVS-LCV-031D EXTERNAL LEAK LARGE	2.4E-08	1.4E+01	3.0E-07
372	CHIPNELPIPE2	CVS PIPING BETWEEN RWSAT AND CHI PUMP EXTERNAL LEAK LARGE	6.0E-10	1.4E+01	7.5E-09
373	CHICF4MVOD031-134	CVS-LCV-031D,F,G FAIL TO OPEN (CCF)	2.6E-06	1.4E+01	3.2E-05
374	CHICF4MVOD031-234	CVS-LCV-031E,F,G FAIL TO OPEN (CCF)	2.6E-06	1.4E+01	3.2E-05
375	CHICF4MVOD031-123	CVS-LCV-031D,E,F FAIL TO OPEN (CCF)	2.6E-06	1.4E+01	3.2E-05
376	CHICF4MVOD031-124	CVS-LCV-031D,E,G FAIL TO OPEN (CCF)	2.6E-06	1.4E+01	3.2E-05
377	ACWMVPR316A	NCS-MOV-316A PLUG	2.4E-06	1.4E+01	3.0E-05
378	ACWCVPR306A	NCS-VLV-306A PLUG	2.4E-06	1.4E+01	3.0E-05

Table 19.1-94 Basic Events (Hardware Failure, Human Error) RAW of POS 8-1 for LPSD PRA (Sheet 28 of 61)

Rank	Basic Event ID	Basic Event Description	Basic Event Probability	RAW	FV Importance
379	ACWMVCM316A	NCS-MOV-316A SPURIOUS CLOSE	9.6E-07	1.4E+01	1.2E-05
380	CHICF2ILFFVCT-ALL	VCT WATER LEVEL SENSOR CVS-LT-030,031 FAIL TO OPERATE CCF	1.6E-06	1.3E+01	2.0E-05
381	EPSCF2CBSO52LL1-ALL	EPS 52/LLAA, LLAD (BREAKER) SPURIOUS OPEN (CCF)	2.8E-07	1.3E+01	3.5E-06
382	EPSCF2CBSO52LL2-ALL	EPS 52/LLDA, LLDD (BREAKER) SPURIOUS OPEN (CCF)	2.8E-07	1.3E+01	3.5E-06
383	EPSCF2CBSO52LC1-ALL	EPS 52/LCA1,D1 (BREAKER) SPURIOUS CLOSE (CCF)	2.8E-07	1.3E+01	3.5E-06
384	RWSXVEL021	RWS-VLV-021 EXTERNAL LEAK LARGE	7.2E-08	1.2E+01	8.0E-07
385	RWSXVEL013A	RWS-VLV-013A EXTERNAL LEAK LARGE	7.2E-08	1.2E+01	8.0E-07
386	RWSXVEL006A	RWS-VLV-006A EXTERNAL LEAK LARGE	7.2E-08	1.2E+01	8.0E-07
387	RWSXVEL005	RWS-VLV-005 EXTERNAL LEAK LARGE	7.2E-08	1.2E+01	8.0E-07
388	RWSXVEL014	RWS-VLV-014 EXTERNAL LEAK LARGE	7.2E-08	1.2E+01	8.0E-07
389	EPSCBFO52RAT-A	EPS 52/RATA (BREAKER) FAIL TO OPEN	3.5E-04	1.2E+01	3.8E-03
390	EPSCBFO52UAT-A	EPS 52/UATA (BREAKER) FAIL TO OPEN	3.5E-04	1.2E+01	3.8E-03
391	EPSCBSC52RATA	EPS 52/RATA (BREAKER) SPURIOUS CLOSE	3.0E-06	1.2E+01	3.2E-05
392	EPSCBSC52UATA	EPS 52/UATA (BREAKER) SPURIOUS CLOSE	3.0E-06	1.2E+01	3.2E-05

Table 19.1-94 Basic Events (Hardware Failure, Human Error) RAW of POS 8-1 for LPSD PRA (Sheet 29 of 61)

Rank	Basic Event ID	Basic Event Description	Basic Event Probability	RAW	FV Importance
393	RSSRIEL001B	RHS-MHX-001B (B-CS/RHR HX) TUBE EXTERNAL LEAK LARGE	7.2E-07	1.2E+01	7.6E-06
394	RSSPNEL04B	RHS B-CS/RHR PUMP LINE PIPING EXTERNAL LEAK LARGE	2.5E-07	1.2E+01	2.7E-06
395	RSSPMEL001B	RHS-MPP-001B (B-CS/RHR PUMP) EXTERNAL LEAK LARGE	1.9E-07	1.2E+01	2.0E-06
396	RSSXVEL013B	RHS-VLV-013B EXTERNAL LEAK LARGE	7.2E-08	1.2E+01	7.6E-07
397	RSSXVEL002B	CSS-VLV-002B EXTERNAL LEAK LARGE	7.2E-08	1.2E+01	7.6E-07
398	RSSCVEL004B	RHS-VLV-004B EXTERNAL LEAK LARGE	4.8E-08	1.2E+01	5.1E-07
399	CFACVEL012	CSS-VLV-012 EXTERNAL LEAK LARGE	4.8E-08	1.2E+01	5.1E-07
400	RSSPNEL05B	RHS RHR OPERATION SUCTION LINE B (OUTSIDE C/V) PIPING EXTERNAL LEAK LARGE	4.7E-08	1.2E+01	5.0E-07
401	RSSPNEL12B	RHS-FCV-021 LINE PIPING EXTERNAL LEAK LARGE	2.6E-08	1.2E+01	2.7E-07
402	RSSMVEL021B	RHS-MOV-021B EXTERNAL LEAK LARGE	2.4E-08	1.2E+01	2.5E-07
403	RSSMVEL004B	CSS-MOV-004B EXTERNAL LEAK LARGE	2.4E-08	1.2E+01	2.5E-07
404	RSSAVEL021	RHS-FCV-021 EXTERNAL LEAK LARGE	2.2E-08	1.2E+01	2.3E-07
405	RSSAVEL023	RHS-HCV-023 EXTERNAL LEAK LARGE	2.2E-08	1.2E+01	2.3E-07
406	RSSPNEL03B	CSS PIPING BETWEEN CSS-MOV-001B AND B-CS/RHR PUMP EXTERNAL LEAK LARGE	6.1E-09	1.2E+01	6.4E-08

Table 19.1-94 Basic Events (Hardware Failure, Human Error) RAW of POS 8-1 for LPSD PRA (Sheet 30 of 61)

Rank	Basic Event ID	Basic Event Description	Basic Event Probability	RAW	FV Importance
407	RSSPNEL08B	RHS ALTERNATE CORE COOLING LINE B (OUTSIDE C/V) PIPING EXTERNAL LEAK LARGE	1.8E-09	1.2E+01	1.9E-08
408	EPSCBFO52UAT-AD	EPS 52/UATA,D (BREAKER) FAIL TO OPEN (CCF)	5.0E-06	1.2E+01	5.2E-05
409	EPSCBFO52RAT-AD	EPS 52/RATA,D (BREAKER) FAIL TO OPEN (CCF)	5.0E-06	1.2E+01	5.2E-05
410	EPSCF4CBSC52UAT-14	EPS 52/UATA,D (BREAKER) SPURIOUS CLOSE (CCF)	3.4E-08	1.2E+01	3.5E-07
411	EPSCF4CBSC52RAT-34	EPS 52/RATA,D (BREAKER) SPURIOUS CLOSE (CCF)	3.4E-08	1.2E+01	3.5E-07
412	HPIOO02S-DP2	(HE) FAIL TO START STANDBY SAFETY INJECTION PUMP	5.5E-02	1.1E+01	6.0E-01
413	RSSRIEL001A	RHS-MHX-001A (A-CS/RHR HX) TUBE EXTERNAL LEAK LARGE	7.2E-07	1.1E+01	7.3E-06
414	RSSPNEL04A	RHS A-CS/RHR PUMP LINE PIPING EXTERNAL LEAK LARGE	2.6E-07	1.1E+01	2.6E-06
415	RSSPMEL001A	RHS-MPP-001A (A-CS/RHR PUMP) EXTERNAL LEAK LARGE	1.9E-07	1.1E+01	2.0E-06
416	RSSXVEL013A	RHS-VLV-013A EXTERNAL LEAK LARGE	7.2E-08	1.1E+01	7.3E-07
417	RSSXVEL031A	RHS-VLV-031A EXTERNAL LEAK LARGE	7.2E-08	1.1E+01	7.3E-07
418	RSSXVEL002A	CSS-VLV-002A EXTERNAL LEAK LARGE	7.2E-08	1.1E+01	7.3E-07
419	RSSPNEL05A	RHS RHR OPERATION SUCTION LINE A (OUTSIDE C/V) PIPING EXTERNAL LEAK LARGE	5.8E-08	1.1E+01	5.9E-07
420	RSSCVEL004A	RHS-VLV-004A EXTERNAL LEAK LARGE	4.8E-08	1.1E+01	4.9E-07

Table 19.1-94 Basic Events (Hardware Failure, Human Error) RAW of POS 8-1 for LPSD PRA (Sheet 31 of 61)

Rank	Basic Event ID	Basic Event Description	Basic Event Probability	RAW	FV Importance
421	RSSMVEL021A	RHS-MOV-021A EXTERNAL LEAK LARGE	2.4E-08	1.1E+01	2.4E-07
422	RSSMVEL004A	CSS-MOV-004A EXTERNAL LEAK LARGE	2.4E-08	1.1E+01	2.4E-07
423	RSSPNEL11A	RHS PIPING BETWEEN RHS-VLV-031A AND ALTERNATE CORE COOLING LINE EXTERNAL LEAK LARGE	1.9E-08	1.1E+01	1.9E-07
424	RSSPNEL03A	CSS PIPING BETWEEN CSS-MOV-001A AND A-CS/RHR PUMP EXTERNAL LEAK LARGE	6.7E-09	1.1E+01	6.8E-08
425	RSSPNEL10A	CSS PIPING BETWEEN RHS-VLV-034A AND A-CS/RHR PUMP SUCTION LINE EXTERNAL LEAK LARGE	3.8E-09	1.1E+01	3.8E-08
426	RSSPNEL08A	RHS ALTERNATE CORE COOLING LINE A (OUTSIDE C/V) PIPING EXTERNAL LEAK LARGE	1.8E-09	1.1E+01	1.8E-08
427	SWSCF3PMBD001ABC-13	EWS-MPP-001A,C (ESW PUMP) FAIL TO RE-START (CCF)	7.9E-05	1.1E+01	7.9E-04
428	RSSRIEL001D	RHS-MHX-001D (D-CS/RHR HX) TUBE EXTERNAL LEAK LARGE	7.2E-07	1.1E+01	7.0E-06
429	RSSPNEL04D	RHS D-CS/RHR PUMP LINE PIPING EXTERNAL LEAK LARGE	2.6E-07	1.1E+01	2.5E-06
430	RSSPMEL001D	RHS-MPP-001D (D-CS/RHR PUMP) EXTERNAL LEAK LARGE	1.9E-07	1.1E+01	1.9E-06
431	RSSXVEL002D	CSS-VLV-002D EXTERNAL LEAK LARGE	7.2E-08	1.1E+01	7.0E-07
432	RSSXVEL034D	RHS-VLV-034D EXTERNAL LEAK LARGE	7.2E-08	1.1E+01	7.0E-07
433	RSSXVEL031D	RHS-VLV-031D EXTERNAL LEAK LARGE	7.2E-08	1.1E+01	7.0E-07
434	RSSXVEL013D	RHS-VLV-013D EXTERNAL LEAK LARGE	7.2E-08	1.1E+01	7.0E-07

Table 19.1-94 Basic Events (Hardware Failure, Human Error) RAW of POS 8-1 for LPSD PRA (Sheet 32 of 61)

Rank	Basic Event ID	Basic Event Description	Basic Event Probability	RAW	FV Importance
435	RSSCVEL004D	RHS-VLV-004D EXTERNAL LEAK LARGE	4.8E-08	1.1E+01	4.6E-07
436	RSSPNEL05D	RHS RHR OPERATION SUCTION LINE D (OUTSIDE C/V) PIPING EXTERNAL LEAK LARGE	4.7E-08	1.1E+01	4.6E-07
437	RSSMVEL004D	CSS-MOV-004D EXTERNAL LEAK LARGE	2.4E-08	1.1E+01	2.3E-07
438	RSSMVEL021D	RHS-MOV-021D EXTERNAL LEAK LARGE	2.4E-08	1.1E+01	2.3E-07
439	RSSPNEL11D	RHS PIPING BETWEEN RHS-VLV-031D AND ALTERNATE CORE COOLING LINE EXTERNAL LEAK LARGE	1.9E-08	1.1E+01	1.8E-07
440	RSSPNEL03D	CSS PIPING BETWEEN CSS-MOV-001D AND D-CS/RHR PUMP EXTERNAL LEAK LARGE	6.1E-09	1.1E+01	5.9E-08
441	RSSPNEL10D	CSS PIPING BETWEEN RHS-VLV-034D AND D-CS/RHR PUMP SUCTION LINE EXTERNAL LEAK LARGE	3.8E-09	1.1E+01	3.6E-08
442	RSSPNEL07D	CSS C/V SPRAY LINE D (OUTSIDE C/V) PIPING EXTERNAL LEAK LARGE	1.8E-09	1.1E+01	1.7E-08
443	RSSPNEL08D	RHS ALTERNATE CORE COOLING LINE D (OUTSIDE C/V) PIPING EXTERNAL LEAK LARGE	1.8E-09	1.1E+01	1.7E-08
444	HPIPMEL001A	SIS-MPP-001A (A-SI PUMP) EXTERNAL LEAK LARGE	1.9E-07	1.1E+01	1.9E-06
445	HPIPMEL001C	SIS-MPP-001C (C-SI PUMP) EXTERNAL LEAK LARGE	1.9E-07	1.1E+01	1.9E-06
446	HPIPMEL001B	SIS-MPP-001B (B-SI PUMP) EXTERNAL LEAK LARGE	1.9E-07	1.1E+01	1.9E-06
447	HPIPMEL001D	SIS-MPP-001D (D-SI PUMP) EXTERNAL LEAK LARGE	1.9E-07	1.1E+01	1.9E-06
448	HPIPNELINJSD	SIS D-SI PUMP DISCHARGE LINE (OUTSIDE C/V) PIPING EXTERNAL LEAK LARGE	9.0E-08	1.1E+01	8.7E-07

Table 19.1-94 Basic Events (Hardware Failure, Human Error) RAW of POS 8-1 for LPSD PRA (Sheet 33 of 61)

Rank	Basic Event ID	Basic Event Description	Basic Event Probability	RAW	FV Importance
449	HPIPNELINJSB	SIS B-SI PUMP DISCHARGE LINE (OUTSIDE C/V) PIPING EXTERNAL LEAK LARGE	9.0E-08	1.1E+01	8.7E-07
450	HPICVEL004B	SIS-VLV-004B EXTERNAL LEAK LARGE	4.8E-08	1.1E+01	4.6E-07
451	HPICVEL004D	SIS-VLV-004D EXTERNAL LEAK LARGE	4.8E-08	1.1E+01	4.6E-07
452	HPIPNELSUCTLD	SIS D-SI PUMP SUCTION LINE (OUTSIDE C/V) PIPING EXTERNAL LEAK LARGE	3.1E-08	1.1E+01	3.0E-07
453	HPIPNELSUCTLB	SIS B-SI PUMP SUCTION LINE (OUTSIDE C/V) PIPING EXTERNAL LEAK LARGE	3.1E-08	1.1E+01	3.0E-07
454	HPIMVEL009D	SIS-MOV-009D EXTERNAL LEAK LARGE	2.4E-08	1.1E+01	2.3E-07
455	HPIMVEL009B	SIS-MOV-009B EXTERNAL LEAK LARGE	2.4E-08	1.1E+01	2.3E-07
456	RWSPMEL001B	RWS-MPP-001B (B-RWR PUMP) EXTERNAL LEAK LARGE	1.9E-07	1.0E+01	1.8E-06
457	RWSPMEL001A	RWS-MPP-001A (A-RWR PUMP) EXTERNAL LEAK LARGE	1.9E-07	1.0E+01	1.8E-06
458	RWSXVEL006B	RWS-VLV-006B EXTERNAL LEAK LARGE	7.2E-08	1.0E+01	6.8E-07
459	RWSXVEL013B	RWS-VLV-013B EXTERNAL LEAK LARGE	7.2E-08	1.0E+01	6.8E-07
460	RWSMVEL004	RWS-MOV-004 EXTERNAL LEAK LARGE	2.4E-08	1.0E+01	2.3E-07
461	HPIPNELINJSA	SIS A-SI PUMP DISCHARGE LINE (OUTSIDE C/V) PIPING EXTERNAL LEAK LARGE	9.2E-08	1.0E+01	8.4E-07
462	HPIPNELINJSC	SIS C-SI PUMP DISCHARGE LINE (OUTSIDE C/V) PIPING EXTERNAL LEAK LARGE	9.2E-08	1.0E+01	8.4E-07

Table 19.1-94 Basic Events (Hardware Failure, Human Error) RAW of POS 8-1 for LPSD PRA (Sheet 34 of 61)

Rank	Basic Event ID	Basic Event Description	Basic Event Probability	RAW	FV Importance
463	HPICVEL004A	SIS-VLV-004A EXTERNAL LEAK LARGE	4.8E-08	1.0E+01	4.4E-07
464	HPICVEL004C	SIS-VLV-004C EXTERNAL LEAK LARGE	4.8E-08	1.0E+01	4.4E-07
465	HPIMVEL009A	SIS-MOV-009A EXTERNAL LEAK LARGE	2.4E-08	1.0E+01	2.2E-07
466	HPIMVEL009C	SIS-MOV-009C EXTERNAL LEAK LARGE	2.4E-08	1.0E+01	2.2E-07
467	RSSXVEL034A	RHS-VLV-034A EXTERNAL LEAK LARGE	7.2E-08	9.6E+00	6.2E-07
468	RWSXVEL066A	NCS-VLV-066A EXTERNAL LEAK LARGE	7.2E-08	9.6E+00	6.2E-07
469	RWSXVEL103B	SFS-VLV-103B EXTERNAL LEAK LARGE	7.2E-08	9.6E+00	6.2E-07
470	RWSXVEL066B	NCS-VLV-066B EXTERNAL LEAK LARGE	7.2E-08	9.6E+00	6.2E-07
471	RWSXVEL101	RWS-VLV-101 EXTERNAL LEAK LARGE	7.2E-08	9.6E+00	6.2E-07
472	RWSXVEL028	SFS-VLV-028 EXTERNAL LEAK LARGE	7.2E-08	9.6E+00	6.2E-07
473	RWSXVEL103A	SFS-VLV-103A EXTERNAL LEAK LARGE	7.2E-08	9.6E+00	6.2E-07
474	RWSCVEL037	LMS-VLV-037 EXTERNAL LEAK LARGE	4.8E-08	9.6E+00	4.1E-07
475	RWSCVEL027	SFS-VLV-027 EXTERNAL LEAK LARGE	4.8E-08	9.6E+00	4.1E-07
476	RWSCVEL065A	NCS-VLV-065A EXTERNAL LEAK LARGE	4.8E-08	9.6E+00	4.1E-07

Table 19.1-94 Basic Events (Hardware Failure, Human Error) RAW of POS 8-1 for LPSD PRA (Sheet 35 of 61)

Rank	Basic Event ID	Basic Event Description	Basic Event Probability	RAW	FV Importance
477	RWSCVEL065B	NCS-VLV-065B EXTERNAL LEAK LARGE	4.8E-08	9.6E+00	4.1E-07
478	RSSPNEL07A	CSS C/V SPRAY LINE A (OUTSIDE C/V) PIPING EXTERNAL LEAK LARGE	1.8E-09	9.6E+00	1.5E-08
479	RWSPNELPIPE4	RWS PIPING BETWEEN RWS-VLV-004 AND RWS-VLV-021 EXTERNAL LEAK LARGE	6.0E-10	9.6E+00	5.2E-09
480	EPSCF3DLLRGTG-23	CLASS-1E GTG B,C FAIL TO LOAD AND RUN AFTER FIRST HOUR OF OPERATION (CCF)	5.1E-04	9.2E+00	4.2E-03
481	EPSCF3DLADGTG-12	CLASS-1E GTG B,C FAIL TO START (CCF)	9.6E-05	9.2E+00	7.9E-04
482	EPSCF3DLSRGTG-23	CLASS-1E GTG B,C FAIL TO LOAD AND RUN DURING FIRST HOUR OF OPERATION (CCF)	8.0E-05	9.2E+00	6.6E-04
483	EPSCF3SEFFGTG-12	CLASS-1E GTG B,C SEQUENCER FAIL TO OPERATE (CCF)	3.8E-05	9.2E+00	3.1E-04
484	EPSCF3CBTD52EPS-23	EPS 52/EPSB,C (BREAKER) FAIL TO CLOSE (CCF)	1.0E-05	9.2E+00	8.3E-05
485	EPSCBFO52UAT-BC	EPS 52/UATB,C (BREAKER) FAIL TO OPEN (CCF)	5.0E-06	9.2E+00	4.1E-05
486	EPSCF3CBSO52EPS-12	EPS 52/EPSB,C (BREAKER) SPURIOUS OPEN (CCF)	6.7E-08	9.2E+00	5.5E-07
487	EPSCF4CBSC52UAT-23	EPS 52/UATB,C (BREAKER) SPURIOUS CLOSE (CCF)	3.4E-08	9.2E+00	2.8E-07
488	EPSCBFO52RAT-BCD	EPS 52/RATB,C,D (BREAKER) FAIL TO OPEN (CCF)	5.2E-06	9.1E+00	4.2E-05
489	EPSCBFO52UAT-BCD	EPS 52/UATB,C,D (BREAKER) FAIL TO OPEN (CCF)	5.2E-06	9.1E+00	4.2E-05
490	EPSCBFO52RAT-BC	EPS 52/RATB,C (BREAKER) FAIL TO OPEN (CCF)	5.0E-06	9.1E+00	4.0E-05

Table 19.1-94 Basic Events (Hardware Failure, Human Error) RAW of POS 8-1 for LPSD PRA (Sheet 36 of 61)

Rank	Basic Event ID	Basic Event Description	Basic Event Probability	RAW	FV Importance
491	EPSCF4CBSC52RAT-12	EPS 52/RATB,C (BREAKER) SPURIOUS CLOSE (CCF)	3.4E-08	9.1E+00	2.7E-07
492	EPSCF4CBSC52RAT-123	EPS 52/RATB,C,D (BREAKER) SPURIOUS CLOSE (CCF)	2.9E-08	9.1E+00	2.4E-07
493	EPSCF4CBSC52UAT-234	EPS 52/UATB,C,D (BREAKER) SPURIOUS CLOSE (CCF)	2.9E-08	9.1E+00	2.4E-07
494	RWSCVEL012B	RWS-VLV-012B EXTERNAL LEAK LARGE	4.8E-08	9.0E+00	3.8E-07
495	RWSCVEL012A	RWS-VLV-012A EXTERNAL LEAK LARGE	4.8E-08	9.0E+00	3.8E-07
496	HPIPNELSUCTLA	SIS A-SI PUMP SUCTION LINE (OUTSIDE C/V) PIPING EXTERNAL LEAK LARGE	3.3E-08	8.8E+00	2.5E-07
497	HPIPNELSUCTLC	SIS C-SI PUMP SUCTION LINE (OUTSIDE C/V) PIPING EXTERNAL LEAK LARGE	3.3E-08	8.8E+00	2.5E-07
498	EPSCF4IVFFIBC-23	CLASS-1E UPS UNIT B,C FAIL TO OPERATE (CCF)	1.0E-06	8.8E+00	7.8E-06
499	EPSCF4CBSO72AU-23	EPS 72/AUB,C (BREAKER) SPURIOUS OPEN (CCF)	3.4E-08	8.8E+00	2.6E-07
500	EPSCF4CBSO52UA-12	EPS 52/UAB,C (BREAKER) SPURIOUS OPEN (CCF)	3.4E-08	8.8E+00	2.6E-07
501	EPSCF4IVFFIBC-234	CLASS-1E UPS UNIT B,C,D FAIL TO OPERATE (CCF)	5.0E-07	8.6E+00	3.8E-06
502	EPSCF4CBSO52UA-123	EPS 52/UAB,C,D (BREAKER) SPURIOUS OPEN (CCF)	2.9E-08	8.6E+00	2.2E-07
503	EPSCF4CBSO72AU-234	EPS 72/AUB,C,D (BREAKER) SPURIOUS OPEN (CCF)	2.9E-08	8.6E+00	2.2E-07
504	RCSCF2ILFF12-ALL	RCS WATER LEVEL SENSOR (NARROW) RCS-LT-014,015 FAIL TO OPERATE CCF	1.6E-06	7.8E+00	1.1E-05

Table 19.1-94 Basic Events (Hardware Failure, Human Error) RAW of POS 8-1 for LPSD PRA (Sheet 37 of 61)

Rank	Basic Event ID	Basic Event Description	Basic Event Probability	RAW	FV Importance
505	EPSCF3DLLRGTG-13	CLASS-1E GTG A,C FAIL TO LOAD AND RUN AFTER FIRST HOUR OF OPERATION (CCF)	5.1E-04	7.4E+00	3.3E-03
506	EPSCF3DLADGTG-23	CLASS-1E GTG A,C FAIL TO START (CCF)	9.6E-05	7.4E+00	6.2E-04
507	EPSCF3DLSRGTG-13	CLASS-1E GTG A,C FAIL TO LOAD AND RUN DURING FIRST HOUR OF OPERATION (CCF)	8.0E-05	7.4E+00	5.2E-04
508	EPSCF3SEFFGTG-23	CLASS-1E GTG A,C SEQUENCER FAIL TO OPERATE (CCF)	3.8E-05	7.4E+00	2.4E-04
509	EPSCF3CBTD52EPS-13	EPS 52/EPSA,C (BREAKER) FAIL TO CLOSE (CCF)	1.0E-05	7.4E+00	6.5E-05
510	EPSCF3CBSO52EPS-23	EPS 52/EPSA,C (BREAKER) SPURIOUS OPEN (CCF)	6.7E-08	7.4E+00	4.3E-07
511	EPSCF4CBSO72DB-12	EPS 72/DBB,C (BREAKER) SPURIOUS OPEN (CCF)	3.4E-08	7.4E+00	2.1E-07
512	EPSCF4BYFFBAT-12	B,C CLASS-1E BATTERY FAIL TO OPERATE (CCF)	1.9E-08	7.4E+00	1.2E-07
513	ACWCVEL306B	NCS-VLV-306B EXTERNAL LEAK LARGE	4.8E-08	6.9E+00	2.8E-07
514	ACWMVEL316B	NCS-MOV-316B EXTERNAL LEAK LARGE	2.4E-08	6.9E+00	1.4E-07
515	EPSCF4IVFFIBC-13	CLASS-1E UPS UNIT A,C FAIL TO OPERATE (CCF)	1.0E-06	6.4E+00	5.4E-06
516	EPSCF4CBSO52UA-24	EPS 52/UAA,C (BREAKER) SPURIOUS OPEN (CCF)	3.4E-08	6.4E+00	1.8E-07
517	EPSCF4CBSO72AU-13	EPS 72/AUA,C (BREAKER) SPURIOUS OPEN (CCF)	3.4E-08	6.4E+00	1.8E-07
518	EPSCF4IVFFIBC-134	CLASS-1E UPS UNIT A,C,D FAIL TO OPERATE (CCF)	5.0E-07	6.1E+00	2.6E-06

Table 19.1-94 Basic Events (Hardware Failure, Human Error) RAW of POS 8-1 for LPSD PRA (Sheet 38 of 61)

Rank	Basic Event ID	Basic Event Description	Basic Event Probability	RAW	FV Importance
519	EPSCF4CBSO72AU-134	EPS 72/AUA,C,D (BREAKER) SPURIOUS OPEN (CCF)	2.9E-08	6.1E+00	1.5E-07
520	EPSCF4CBSO52UA-234	EPS 52/UAA,C,D (BREAKER) SPURIOUS OPEN (CCF)	2.9E-08	6.1E+00	1.5E-07
521	EPSCF4CBSO72DB-123	EPS 72/DBB,C,D (BREAKER) SPURIOUS OPEN (CCF)	2.9E-08	6.0E+00	1.5E-07
522	EPSCF4BYFFBAT-123	B,C,D CLASS-1E BATTERY FAIL TO OPERATE (CCF)	1.2E-08	6.0E+00	6.2E-08
523	RSSCF2IPFFHEADAB-ALL	CS/RHR HEADER PRESSURE SENSOR (TRAIN A,B) FAIL TO OPERATE CCF	1.3E-06	5.6E+00	5.9E-06
524	CHIPMAD001A	CVS-MPP-001A (A-CHI PUMP) FAIL TO START	1.5E-03	5.6E+00	6.9E-03
525	ACWMVOD325A	NCS-MOV-325A FAIL TO OPEN	1.0E-03	5.6E+00	4.6E-03
526	ACWMVOD322A	NCS-MOV-322A FAIL TO OPEN	1.0E-03	5.6E+00	4.6E-03
527	ACWMVCD316A	NCS-MOV-316A FAIL TO CLOSE	1.0E-03	5.6E+00	4.6E-03
528	ACWMVOD324A	NCS-MOV-324A FAIL TO OPEN	1.0E-03	5.6E+00	4.6E-03
529	ACWMVOD321A	NCS-MOV-321A FAIL TO OPEN	1.0E-03	5.6E+00	4.6E-03
530	ACWCVCD306A	NCS-VLV-306A FAIL TO CLOSE	1.0E-04	5.6E+00	4.6E-04
531	ACWMVPR324A	NCS-MOV-324A PLUG	2.4E-06	5.6E+00	1.1E-05
532	ACWMVPR321A	NCS-MOV-321A PLUG	2.4E-06	5.6E+00	1.1E-05

Table 19.1-94 Basic Events (Hardware Failure, Human Error) RAW of POS 8-1 for LPSD PRA (Sheet 39 of 61)

Rank	Basic Event ID	Basic Event Description	Basic Event Probability	RAW	FV Importance
533	ACWMVPR325A	NCS-MOV-325A PLUG	2.4E-06	5.6E+00	1.1E-05
534	ACWMVPR322A	NCS-MOV-322A PLUG	2.4E-06	5.6E+00	1.1E-05
535	ACWMVCM322A	NCS-MOV-322A SPURIOUS CLOSE	9.6E-07	5.6E+00	4.4E-06
536	ACWMVOM316A	NCS-MOV-316A SPURIOUS OPEN	9.6E-07	5.6E+00	4.4E-06
537	ACWMVCM325A	NCS-MOV-325A SPURIOUS CLOSE	9.6E-07	5.6E+00	4.4E-06
538	ACWMVCM321A	NCS-MOV-321A SPURIOUS CLOSE	9.6E-07	5.6E+00	4.4E-06
539	ACWMVCM324A	NCS-MOV-324A SPURIOUS CLOSE	9.6E-07	5.6E+00	4.4E-06
540	ACWCVIL306A	NCS-VLV-306A INTERNAL LEAK LARGE	7.2E-07	5.6E+00	3.3E-06
541	ACWMVIL316A	NCS-MOV-316A INTERNAL LEAK LARGE	7.2E-08	5.6E+00	3.3E-07
542	ACWMVIL326A	NCS-MOV-326A INTERNAL LEAK LARGE	7.2E-08	5.6E+00	3.3E-07
543	ACWMVIL323A	NCS-MOV-323A INTERNAL LEAK LARGE	7.2E-08	5.6E+00	3.3E-07
544	SWSSTPRST003C	EWS-SST-003C (STRAINER) PLUG	1.7E-04	5.5E+00	7.6E-04
545	SWSORPR036	EWS-FE-036 (ORIFICE) PLUG	2.4E-05	5.5E+00	1.1E-04
546	SWSORPR001C	EWS-SRO-001C (ORIFICE) PLUG	2.4E-05	5.5E+00	1.1E-04

Table 19.1-94 Basic Events (Hardware Failure, Human Error) RAW of POS 8-1 for LPSD PRA (Sheet 40 of 61)

Rank	Basic Event ID	Basic Event Description	Basic Event Probability	RAW	FV Importance
547	CWSORPR037	NCS-FE-037 (ORIFICE) PLUG	2.4E-05	5.5E+00	1.1E-04
548	CWSORPR042	NCS-FE-042 (ORIFICE) PLUG	2.4E-05	5.5E+00	1.1E-04
549	SWSPEELSWPC1	EWS C-EWS PUMP DISCHARGE LINE PIPING EXTERNAL LEAK LARGE	3.9E-06	5.5E+00	1.8E-05
550	SWSXVPR506C	EWS-VLV-506C PLUG	2.4E-06	5.5E+00	1.1E-05
551	SWSMVPR503C	EWS-MOV-503C PLUG	2.4E-06	5.5E+00	1.1E-05
552	CWSXVPR018C	NCS-VLV-018C PLUG	2.4E-06	5.5E+00	1.1E-05
553	CWSXVPR008C	NCS-VLV-008C PLUG	2.4E-06	5.5E+00	1.1E-05
554	SWSCVPR502C	EWS-VLV-502C PLUG	2.4E-06	5.5E+00	1.1E-05
555	CWSXVPR101C	NCS-VLV-101C PLUG	2.4E-06	5.5E+00	1.1E-05
556	CWSXVPR104C	NCS-VLV-104C PLUG	2.4E-06	5.5E+00	1.1E-05
557	SWSXVPR517C	EWS-VLV-517C PLUG	2.4E-06	5.5E+00	1.1E-05
558	SWSXVPR511C	EWS-VLV-511C PLUG	2.4E-06	5.5E+00	1.1E-05
559	SWSXVPR514C	EWS-VLV-514C PLUG	2.4E-06	5.5E+00	1.1E-05
560	SWSXVPR508C	EWS-VLV-508C PLUG	2.4E-06	5.5E+00	1.1E-05

Table 19.1-94 Basic Events (Hardware Failure, Human Error) RAW of POS 8-1 for LPSD PRA (Sheet 41 of 61)

Rank	Basic Event ID	Basic Event Description	Basic Event Probability	RAW	FV Importance
561	CWSCVPR016C	NCS-VLV-016C PLUG	2.4E-06	5.5E+00	1.1E-05
562	SWSXVPR520C	EWS-VLV-520C PLUG	2.4E-06	5.5E+00	1.1E-05
563	SWSMVCM503C	EWS-MOV-503C SPURIOUS CLOSE	9.6E-07	5.5E+00	4.4E-06
564	CWSPNELCCWD	NCS CWS TRAIN D PIPING EXTERNAL LEAK LARGE	9.1E-07	5.5E+00	4.1E-06
565	CWSRIEL001D1	NCS-MHX-001D (D-CCW HX) TUBE EXTERNAL LEAK LARGE	7.2E-07	5.5E+00	3.3E-06
566	CWSRIEL001C2	NCS-MHX-001C (C-CCW HX) TUBE EXTERNAL LEAK LARGE	7.2E-07	5.5E+00	3.3E-06
567	SWSPEELSWSC3	EWS C-CCW HX COOLING LINE PIPING EXTERNAL LEAK LARGE	2.1E-07	5.5E+00	9.7E-07
568	SWSPMEL001C	EWS-MPP-001C (C-ESW PUMP) EXTERNAL LEAK LARGE	1.9E-07	5.5E+00	8.7E-07
569	CWSPMEL001D	NCS-MPP-001D (D-CCW PUMP) EXTERNAL LEAK LARGE	1.9E-07	5.5E+00	8.7E-07
570	RSSRXEL001D	RHS-MHX-001D (D-CS/RHR HX) SHELL EXTERNAL LEAK LARGE	9.6E-08	5.5E+00	4.4E-07
571	SWSXVEL514C	EWS-VLV-514C EXTERNAL LEAK LARGE	7.2E-08	5.5E+00	3.3E-07
572	RSSXVEL131D	NCS-VLV-131D EXTERNAL LEAK LARGE	7.2E-08	5.5E+00	3.3E-07
573	HPIXVEL111D	NCS-VLV-111D EXTERNAL LEAK LARGE	7.2E-08	5.5E+00	3.3E-07
574	RSSXVEL128D	NCS-VLV-128D EXTERNAL LEAK LARGE	7.2E-08	5.5E+00	3.3E-07

Table 19.1-94 Basic Events (Hardware Failure, Human Error) RAW of POS 8-1 for LPSD PRA (Sheet 42 of 61)

Rank	Basic Event ID	Basic Event Description	Basic Event Probability	RAW	FV Importance
575	SWSXVEL511C	EWS-VLV-511C EXTERNAL LEAK LARGE	7.2E-08	5.5E+00	3.3E-07
576	RSSXVEL141D	NCS-VLV-141D EXTERNAL LEAK LARGE	7.2E-08	5.5E+00	3.3E-07
577	HPIXVEL115D	NCS-VLV-115D EXTERNAL LEAK LARGE	7.2E-08	5.5E+00	3.3E-07
578	RSSXVEL144D	NCS-VLV-144D EXTERNAL LEAK LARGE	7.2E-08	5.5E+00	3.3E-07
579	CWSXVEL101D	NCS-VLV-101D EXTERNAL LEAK LARGE	7.2E-08	5.5E+00	3.3E-07
580	CWSXVEL104D	NCS-VLV-104D EXTERNAL LEAK LARGE	7.2E-08	5.5E+00	3.3E-07
581	HPIXVEL116D	NCS-VLV-116D EXTERNAL LEAK LARGE	7.2E-08	5.5E+00	3.3E-07
582	HPIXVEL119D	NCS-VLV-119D EXTERNAL LEAK LARGE	7.2E-08	5.5E+00	3.3E-07
583	HPIXVEL114D	NCS-VLV-114D EXTERNAL LEAK LARGE	7.2E-08	5.5E+00	3.3E-07
584	SWSXVEL507C	EWS-VLV-507C EXTERNAL LEAK LARGE	7.2E-08	5.5E+00	3.3E-07
585	SWSXVEL506C	EWS-VLV-506C EXTERNAL LEAK LARGE	7.2E-08	5.5E+00	3.3E-07
586	CWSXVEL005D	NCS-VLV-005D EXTERNAL LEAK LARGE	7.2E-08	5.5E+00	3.3E-07
587	CWSXVEL018D	NCS-VLV-018D EXTERNAL LEAK LARGE	7.2E-08	5.5E+00	3.3E-07
588	SWSXVEL508C	EWS-VLV-508C EXTERNAL LEAK LARGE	7.2E-08	5.5E+00	3.3E-07

Table 19.1-94 Basic Events (Hardware Failure, Human Error) RAW of POS 8-1 for LPSD PRA (Sheet 43 of 61)

Rank	Basic Event ID	Basic Event Description	Basic Event Probability	RAW	FV Importance
589	CWSXVEL008D	NCS-VLV-008D EXTERNAL LEAK LARGE	7.2E-08	5.5E+00	3.3E-07
590	SWSXVEL509C	EWS-VLV-509C EXTERNAL LEAK LARGE	7.2E-08	5.5E+00	3.3E-07
591	RSSXVEL125D	NCS-VLV-125D EXTERNAL LEAK LARGE	7.2E-08	5.5E+00	3.3E-07
592	CWSCVEL016D	NCS-VLV-016D EXTERNAL LEAK LARGE	4.8E-08	5.5E+00	2.2E-07
593	SWSCVEL502C	EWS-VLV-502C EXTERNAL LEAK LARGE	4.8E-08	5.5E+00	2.2E-07
594	CWSMVEL007D	NCS-MOV-007D EXTERNAL LEAK LARGE	2.4E-08	5.5E+00	1.1E-07
595	SWSMVEL503C	EWS-MOV-503C EXTERNAL LEAK LARGE	2.4E-08	5.5E+00	1.1E-07
596	RSSMVEL145D	NCS-MOV-145D EXTERNAL LEAK LARGE	2.4E-08	5.5E+00	1.1E-07
597	CWSMVEL020D	NCS-MOV-020D EXTERNAL LEAK LARGE	2.4E-08	5.5E+00	1.1E-07
598	SWSPMYR001C-ABC	EWS-MPP-001C (C-EWS PUMP) FAIL TO RUN	1.2E-04	5.5E+00	5.4E-04
599	CWSPCYR001C-ABC	NCS-MPP-001C (C-CCW PUMP) FAIL TO RUN	6.7E-05	5.5E+00	3.0E-04
600	ACWOO02SC	(HE) FAIL TO ESTABLISH THE ALTERNATE CCWS BY FIRE PROTECTION WATER SUPPLY SYSTEM	2.2E-02	5.5E+00	1.0E-01
601	SWSFMPR072	EWS-FT-072 (FLOW METER) PLUG	2.4E-05	5.5E+00	1.1E-04
602	SWSORPR002C	EWS-SRO-002C (ORIFICE) PLUG	2.4E-05	5.5E+00	1.1E-04

Table 19.1-94 Basic Events (Hardware Failure, Human Error) RAW of POS 8-1 for LPSD PRA (Sheet 44 of 61)

Rank	Basic Event ID	Basic Event Description	Basic Event Probability	RAW	FV Importance
603	SWSXVPR601C	EWS-VLV-601C PLUG	2.4E-06	5.5E+00	1.1E-05
604	SWSCVPR602C	EWS-VLV-602C PLUG	2.4E-06	5.5E+00	1.1E-05
605	SWSPEELSWSC2	EWS C-EWS PUMP COOLING LINE PIPING EXTERNAL LEAK LARGE	3.8E-07	5.5E+00	1.7E-06
606	SWSXVEL601C	EWS-VLV-601C EXTERNAL LEAK LARGE	7.2E-08	5.5E+00	3.2E-07
607	SWSCVEL602C	EWS-VLV-602C EXTERNAL LEAK LARGE	4.8E-08	5.5E+00	2.1E-07
608	CWSCF3IPFFHEAD-ALL	CCW SUPPLY HEADER PRESSURE SENSOR (TRAIN A,B,C) FAIL TO OPERATE CCF	6.8E-07	5.4E+00	3.0E-06
609	RSSCF3PMAD001ABC-ALL	RHS-MPP-001A,B,C (CS/RHR PUMP) FAIL TO RE-START (CCF)	5.0E-05	5.3E+00	2.2E-04
610	RSSCF3PMYR001ABC-ALL	RHS-MPP-001A,B,C (CS/RHR PUMP) FAIL TO RUN (CCF)	3.0E-06	5.3E+00	1.3E-05
611	ACWTNELFWT	FWT (FIRE SUPPRESSION WATER TANK) EXTERNAL LEAK LARGE	4.8E-08	5.2E+00	2.0E-07
612	RSSCF3RHPR001ABC-ALL	RHS-MHX-001A,B,C (CS/RHR HX) PLUG / FOUL (CCF)	5.2E-06	5.2E+00	2.2E-05
613	RSSCF3CVOD004ABC-ALL	RHS-VLV-004A,B,C FAIL TO OPEN (CCF)	6.7E-07	5.2E+00	2.8E-06
614	EPSCF3DLLRGTG-12	CLASS-1E GTG A,B FAIL TO LOAD AND RUN AFTER FIRST HOUR OF OPERATION (CCF)	5.1E-04	5.2E+00	2.1E-03
615	EPSCF3DLADGTG-13	CLASS-1E GTG A,B FAIL TO START (CCF)	9.6E-05	5.2E+00	4.0E-04
616	EPSCF3DLSRGTG-12	CLASS-1E GTG A,B FAIL TO LOAD AND RUN DURING FIRST HOUR OF OPERATION (CCF)	8.0E-05	5.2E+00	3.3E-04

Table 19.1-94 Basic Events (Hardware Failure, Human Error) RAW of POS 8-1 for LPSD PRA (Sheet 45 of 61)

Rank	Basic Event ID	Basic Event Description	Basic Event Probability	RAW	FV Importance
617	EPSCF3SEFFGTG-13	CLASS-1E GTG A,B SEQUENCER FAIL TO OPERATE (CCF)	3.8E-05	5.2E+00	1.6E-04
618	EPSCF3CBTD52EPS-12	EPS 52/EPSA,B (BREAKER) FAIL TO CLOSE (CCF)	1.0E-05	5.2E+00	4.2E-05
619	EPSCF3CBSO52EPS-13	EPS 52/EPSA,B (BREAKER) SPURIOUS OPEN (CCF)	6.7E-08	5.2E+00	2.8E-07
620	CVCAVCD024C	RHS-AOV-024C FAIL TO CLOSE	1.2E-03	5.1E+00	5.0E-03
621	CVCAVCD024B	RHS-AOV-024B FAIL TO CLOSE	1.2E-03	5.1E+00	5.0E-03
622	RSSCF3CVOD028ABC-ALL	RHS-VLV-028A,B,C FAIL TO OPEN (CCF)	6.7E-07	4.9E+00	2.6E-06
623	RSSCF3CVOD022ABC-ALL	RHS-VLV-022A,B,C FAIL TO OPEN (CCF)	6.7E-07	4.9E+00	2.6E-06
624	RSSCF3CVOD027ABC-ALL	RHS-VLV-027A,B,C FAIL TO OPEN (CCF)	6.7E-07	4.9E+00	2.6E-06
625	CWSRHPF001C1-ABC	NCS-MHX-001C (C-CCW HX) PLUG / FOUL	1.4E-06	4.9E+00	5.3E-06
626	CWSPNELCCWC	NCS CWS TRAIN C PIPING EXTERNAL LEAK LARGE	1.1E-06	4.8E+00	4.4E-06
627	CWSRIEL001C1	NCS-MHX-001C (C-CCW HX) TUBE EXTERNAL LEAK LARGE	7.2E-07	4.8E+00	2.8E-06
628	CWSPMEL001C	NCS-MPP-001C (C-CCW PUMP) EXTERNAL LEAK LARGE	1.9E-07	4.8E+00	7.4E-07
629	CWSXVEL005C	NCS-VLV-005C EXTERNAL LEAK LARGE	7.2E-08	4.8E+00	2.8E-07
630	HPIXVEL114C	NCS-VLV-114C EXTERNAL LEAK LARGE	7.2E-08	4.8E+00	2.8E-07

Table 19.1-94 Basic Events (Hardware Failure, Human Error) RAW of POS 8-1 for LPSD PRA (Sheet 46 of 61)

Rank	Basic Event ID	Basic Event Description	Basic Event Probability	RAW	FV Importance
631	HPIXVEL119C	NCS-VLV-119C EXTERNAL LEAK LARGE	7.2E-08	4.8E+00	2.8E-07
632	CWSXVEL008C	NCS-VLV-008C EXTERNAL LEAK LARGE	7.2E-08	4.8E+00	2.8E-07
633	CWSXVEL104C	NCS-VLV-104C EXTERNAL LEAK LARGE	7.2E-08	4.8E+00	2.8E-07
634	CWSXVEL101C	NCS-VLV-101C EXTERNAL LEAK LARGE	7.2E-08	4.8E+00	2.8E-07
635	CWSXVEL018C	NCS-VLV-018C EXTERNAL LEAK LARGE	7.2E-08	4.8E+00	2.8E-07
636	HPIXVEL116C	NCS-VLV-116C EXTERNAL LEAK LARGE	7.2E-08	4.8E+00	2.8E-07
637	HPIXVEL111C	NCS-VLV-111C EXTERNAL LEAK LARGE	7.2E-08	4.8E+00	2.8E-07
638	HPIXVEL115C	NCS-VLV-115C EXTERNAL LEAK LARGE	7.2E-08	4.8E+00	2.8E-07
639	CWSCVEL016C	NCS-VLV-016C EXTERNAL LEAK LARGE	4.8E-08	4.8E+00	1.8E-07
640	CWSMVEL020C	NCS-MOV-020C EXTERNAL LEAK LARGE	2.4E-08	4.8E+00	9.2E-08
641	CWSMVEL007C	NCS-MOV-007C EXTERNAL LEAK LARGE	2.4E-08	4.8E+00	9.2E-08
642	CWSPNELCCWC1	NCS CWS C1-HEADER LINE PIPING EXTERNAL LEAK LARGE	7.9E-07	4.7E+00	3.0E-06
643	CWSXVEL034B	NCS-VLV-034B EXTERNAL LEAK LARGE	7.2E-08	4.7E+00	2.7E-07
644	CWSXVEL033B	NCS-VLV-033B EXTERNAL LEAK LARGE	7.2E-08	4.7E+00	2.7E-07

Table 19.1-94 Basic Events (Hardware Failure, Human Error) RAW of POS 8-1 for LPSD PRA (Sheet 47 of 61)

Rank	Basic Event ID	Basic Event Description	Basic Event Probability	RAW	FV Importance
645	CHIXVEL311B	NCS-VLV-311B EXTERNAL LEAK LARGE	7.2E-08	4.7E+00	2.7E-07
646	CHIXVEL312B	NCS-VLV-312B EXTERNAL LEAK LARGE	7.2E-08	4.7E+00	2.7E-07
647	CHIXVEL301B	NCS-VLV-301B EXTERNAL LEAK LARGE	7.2E-08	4.7E+00	2.7E-07
648	CHIXVEL315B	NCS-VLV-315B EXTERNAL LEAK LARGE	7.2E-08	4.7E+00	2.7E-07
649	ACWMVEL325B	NCS-MOV-325B EXTERNAL LEAK LARGE	2.4E-08	4.5E+00	8.3E-08
650	ACWMVEL325A	NCS-MOV-325A EXTERNAL LEAK LARGE	2.4E-08	4.5E+00	8.3E-08
651	ACWMVEL324A	NCS-MOV-324A EXTERNAL LEAK LARGE	2.4E-08	4.5E+00	8.3E-08
652	ACWMVEL326B	NCS-MOV-326B EXTERNAL LEAK LARGE	2.4E-08	4.5E+00	8.3E-08
653	ACWMVEL326A	NCS-MOV-326A EXTERNAL LEAK LARGE	2.4E-08	4.5E+00	8.3E-08
654	ACWMVEL324B	NCS-MOV-324B EXTERNAL LEAK LARGE	2.4E-08	4.5E+00	8.3E-08
655	ACWMVEL323B	NCS-MOV-323B EXTERNAL LEAK LARGE	2.4E-08	4.5E+00	8.3E-08
656	ACWMVEL321B	NCS-MOV-321B EXTERNAL LEAK LARGE	2.4E-08	4.5E+00	8.3E-08
657	ACWMVEL321A	NCS-MOV-321A EXTERNAL LEAK LARGE	2.4E-08	4.5E+00	8.3E-08
658	ACWMVEL322A	NCS-MOV-322A EXTERNAL LEAK LARGE	2.4E-08	4.5E+00	8.3E-08

Table 19.1-94 Basic Events (Hardware Failure, Human Error) RAW of POS 8-1 for LPSD PRA (Sheet 48 of 61)

Rank	Basic Event ID	Basic Event Description	Basic Event Probability	RAW	FV Importance
659	ACWMVEL323A	NCS-MOV-323A EXTERNAL LEAK LARGE	2.4E-08	4.5E+00	8.3E-08
660	ACWMVEL322B	NCS-MOV-322B EXTERNAL LEAK LARGE	2.4E-08	4.5E+00	8.3E-08
661	ACWPNELPIPEA2	ALTERNATE CCW A-CHI PUMP DISCHARGE LINE PIPING EXTERNAL LEAK LARGE	6.0E-10	4.5E+00	2.1E-09
662	ACWPNELPIPEA1	ALTERNATE CCW A-CHI PUMP SUCTION LINE PIPING EXTERNAL LEAK LARGE	6.0E-10	4.5E+00	2.1E-09
663	ACWPNELPIPEB1	ALTERNATE CCW B-CHI PUMP SUCTION LINE PIPING EXTERNAL LEAK LARGE	6.0E-10	4.5E+00	2.1E-09
664	ACWPNELPIPEFS	FIRE SUPPRESSION WATER TANK LINE PIPING EXTERNAL LEAK LARGE	6.0E-10	4.5E+00	2.1E-09
665	ACWPNELPIPEB2	ALTERNATE CCW B-CHI PUMP DISCHARGE LINE PIPING EXTERNAL LEAK LARGE	6.0E-10	4.5E+00	2.1E-09
666	EPSCF4IVFFIBC-12	CLASS-1E UPS UNIT A,B FAIL TO OPERATE (CCF)	1.0E-06	4.5E+00	3.5E-06
667	EPSCF4CBSO72AU-12	EPS 72/AUA,B (BREAKER) SPURIOUS OPEN (CCF)	3.4E-08	4.5E+00	1.2E-07
668	EPSCF4CBSO52UA-14	EPS 52/UAA,B (BREAKER) SPURIOUS OPEN (CCF)	3.4E-08	4.5E+00	1.2E-07
669	EPSCF4IVFFIBC-124	CLASS-1E UPS UNIT A,B,D FAIL TO OPERATE (CCF)	5.0E-07	4.2E+00	1.6E-06
670	EPSCF4CBSO52UA-134	EPS 52/UAA,B,D (BREAKER) SPURIOUS OPEN (CCF)	2.9E-08	4.2E+00	9.3E-08
671	EPSCF4CBSO72AU-124	EPS 72/AUA,B,D (BREAKER) SPURIOUS OPEN (CCF)	2.9E-08	4.2E+00	9.3E-08
672	SWSSTPRST003B	EWS-SST-003B (STRAINER) PLUG	1.7E-04	3.8E+00	4.6E-04

Table 19.1-94 Basic Events (Hardware Failure, Human Error) RAW of POS 8-1 for LPSD PRA (Sheet 49 of 61)

Rank	Basic Event ID	Basic Event Description	Basic Event Probability	RAW	FV Importance
673	CWSORPR041	NCS-FE-041 (ORIFICE) PLUG	2.4E-05	3.8E+00	6.6E-05
674	SWSORPR001B	EWS-SRO-001B (ORIFICE) PLUG	2.4E-05	3.8E+00	6.6E-05
675	SWSORPR035	EWS-FE-035 (ORIFICE) PLUG	2.4E-05	3.8E+00	6.6E-05
676	SWSPEELSWPB1	EWS B-EWS PUMP DISCHARGE LINE PIPING EXTERNAL LEAK LARGE	3.9E-06	3.8E+00	1.1E-05
677	SWSXVPR511B	EWS-VLV-511B PLUG	2.4E-06	3.8E+00	6.6E-06
678	SWSCVPR502B	EWS-VLV-502B PLUG	2.4E-06	3.8E+00	6.6E-06
679	SWSXVPR514B	EWS-VLV-514B PLUG	2.4E-06	3.8E+00	6.6E-06
680	CWSXVPR104B	NCS-VLV-104B PLUG	2.4E-06	3.8E+00	6.6E-06
681	CWSCVPR016B	NCS-VLV-016B PLUG	2.4E-06	3.8E+00	6.6E-06
682	SWSXVPR508B	EWS-VLV-508B PLUG	2.4E-06	3.8E+00	6.6E-06
683	CWSXVPR018B	NCS-VLV-018B PLUG	2.4E-06	3.8E+00	6.6E-06
684	CWSXVPR008B	NCS-VLV-008B PLUG	2.4E-06	3.8E+00	6.6E-06
685	SWSMVPR503B	EWS-MOV-503B PLUG	2.4E-06	3.8E+00	6.6E-06
686	SWSXVPR506B	EWS-VLV-506B PLUG	2.4E-06	3.8E+00	6.6E-06

Table 19.1-94 Basic Events (Hardware Failure, Human Error) RAW of POS 8-1 for LPSD PRA (Sheet 50 of 61)

Rank	Basic Event ID	Basic Event Description	Basic Event Probability	RAW	FV Importance
687	CWSXVPR101B	NCS-VLV-101B PLUG	2.4E-06	3.8E+00	6.6E-06
688	SWSXVPR520B	EWS-VLV-520B PLUG	2.4E-06	3.8E+00	6.6E-06
689	SWSXVPR517B	EWS-VLV-517B PLUG	2.4E-06	3.8E+00	6.6E-06
690	SWSMVCM503B	EWS-MOV-503B SPURIOUS CLOSE	9.6E-07	3.8E+00	2.6E-06
691	CWSRIEL001B2	NCS-MHX-001B (B-CCW HX) TUBE EXTERNAL LEAK LARGE	7.2E-07	3.8E+00	2.0E-06
692	SWSPEELSWSB3	EWS B-CCW HX COOLING LINE PIPING EXTERNAL LEAK LARGE	2.1E-07	3.8E+00	5.9E-07
693	SWSPMEL001B	EWS-MPP-001B (B-ESW PUMP) EXTERNAL LEAK LARGE	1.9E-07	3.8E+00	5.3E-07
694	SWSXVEL509B	EWS-VLV-509B EXTERNAL LEAK LARGE	7.2E-08	3.8E+00	2.0E-07
695	SWSXVEL507B	EWS-VLV-507B EXTERNAL LEAK LARGE	7.2E-08	3.8E+00	2.0E-07
696	SWSXVEL506B	EWS-VLV-506B EXTERNAL LEAK LARGE	7.2E-08	3.8E+00	2.0E-07
697	SWSXVEL508B	EWS-VLV-508B EXTERNAL LEAK LARGE	7.2E-08	3.8E+00	2.0E-07
698	SWSXVEL514B	EWS-VLV-514B EXTERNAL LEAK LARGE	7.2E-08	3.8E+00	2.0E-07
699	SWSXVEL511B	EWS-VLV-511B EXTERNAL LEAK LARGE	7.2E-08	3.8E+00	2.0E-07
700	SWSCVEL502B	EWS-VLV-502B EXTERNAL LEAK LARGE	4.8E-08	3.8E+00	1.3E-07

Table 19.1-94 Basic Events (Hardware Failure, Human Error) RAW of POS 8-1 for LPSD PRA (Sheet 51 of 61)

Rank	Basic Event ID	Basic Event Description	Basic Event Probability	RAW	FV Importance
701	SWSMVEL503B	EWS-MOV-503B EXTERNAL LEAK LARGE	2.4E-08	3.8E+00	6.6E-08
702	SWSPMYR001B-ABC	EWS-MPP-001B (B-EWS PUMP) FAIL TO RUN	1.2E-04	3.8E+00	3.3E-04
703	CWSPCYR001B-ABC	NCS-MPP-001B (B-CCW PUMP) FAIL TO RUN	6.7E-05	3.7E+00	1.8E-04
704	SWSORPR002B	EWS-SRO-002B (ORIFICE) PLUG	2.4E-05	3.7E+00	6.5E-05
705	SWSFMPR071	EWS-FT-071 (FLOW METER) PLUG	2.4E-05	3.7E+00	6.5E-05
706	SWSCVPR602B	EWS-VLV-602B PLUG	2.4E-06	3.7E+00	6.5E-06
707	SWSXVPR601B	EWS-VLV-601B PLUG	2.4E-06	3.7E+00	6.5E-06
708	SWSPEELSWSB2	EWS B-EWS PUMP COOLING LINE PIPING EXTERNAL LEAK LARGE	3.8E-07	3.7E+00	1.0E-06
709	SWSXVEL601B	EWS-VLV-601B EXTERNAL LEAK LARGE	7.2E-08	3.7E+00	2.0E-07
710	SWSCVEL602B	EWS-VLV-602B EXTERNAL LEAK LARGE	4.8E-08	3.7E+00	1.3E-07
711	RWSOO04XV051	(HE) MISALIGNMENT OF RWS-VLV-051 AFTER TEST OR MAINTENANCE	8.0E-04	3.6E+00	2.1E-03
712	RWSXVOD021	RWS-VLV-021 FAIL TO OPEN	7.0E-04	3.6E+00	1.9E-03
713	RWSXVOD052	RWS-VLV-052 FAIL TO OPEN	7.0E-04	3.6E+00	1.9E-03
714	RWSXVPR051	RWS-VLV-051 PLUG	2.4E-06	3.6E+00	6.3E-06

Table 19.1-94 Basic Events (Hardware Failure, Human Error) RAW of POS 8-1 for LPSD PRA (Sheet 52 of 61)

Rank	Basic Event ID	Basic Event Description	Basic Event Probability	RAW	FV Importance
715	RWSXVPR021	RWS-VLV-021 PLUG	2.4E-06	3.6E+00	6.3E-06
716	RWSXVPR052	RWS-VLV-052 PLUG	2.4E-06	3.6E+00	6.3E-06
717	RWSXVEL051	RWS-VLV-051 EXTERNAL LEAK LARGE	7.2E-08	3.6E+00	1.9E-07
718	RWSXVEL052	RWS-VLV-052 EXTERNAL LEAK LARGE	7.2E-08	3.6E+00	1.9E-07
719	RWSPNELPIPE5	RWS PIPING BETWEEN RWS-VLV-021 AND RWSAT EXTERNAL LEAK LARGE	6.0E-10	3.6E+00	1.6E-09
720	RWSCF2PMAD001AB-ALL	RWS-MPP-001A,B (RWR PUMP) FAIL TO START (CCF)	7.1E-05	3.6E+00	1.9E-04
721	RWSILFF020	RWSAT WATER LEVEL SENSOR RWS-LT-020 FAIL TO OPERATE	3.4E-05	3.6E+00	8.8E-05
722	RWSCF2PMSR001AB-ALL	RWS-MPP-001A,B (RWR PUMP) FAIL TO RUN DURING FIRST HOUR OF OPERATION (CCF)	1.9E-05	3.6E+00	4.9E-05
723	RWSCF2PMLR001AB-ALL	RWS-MPP-001A,B (RWR PUMP) FAIL TO RUN AFTER FIRST HOUR OF OPERATION (CCF)	6.5E-06	3.6E+00	1.7E-05
724	RWSXVPR001	RWS-VLV-001 PLUG	2.4E-06	3.6E+00	6.2E-06
725	RWSMVPR002	RWS-MOV-002 PLUG	2.4E-06	3.6E+00	6.2E-06
726	RWSMVPR004	RWS-MOV-004 PLUG	2.4E-06	3.6E+00	6.2E-06
727	RWSMVCM004	RWS-MOV-004 SPURIOUS CLOSE	9.6E-07	3.6E+00	2.5E-06
728	RWSMVCM002	RWS-MOV-002 SPURIOUS CLOSE	9.6E-07	3.6E+00	2.5E-06

Table 19.1-94 Basic Events (Hardware Failure, Human Error) RAW of POS 8-1 for LPSD PRA (Sheet 53 of 61)

Rank	Basic Event ID	Basic Event Description	Basic Event Probability	RAW	FV Importance
729	RSSRXEL001C	RHS-MHX-001C (C-CS/RHR HX) SHELL EXTERNAL LEAK LARGE	9.6E-08	3.5E+00	2.4E-07
730	CWSRHPF001B1-ABC	NCS-MHX-001B (B-CCW HX) PLUG / FOUL	1.4E-06	3.4E+00	3.3E-06
731	EPSOO02RDG	(HE) FAIL TO CONNECT THE ALTERNATE AC POWER SOURCE TO CLASS 1E BUS	2.1E-02	3.2E+00	4.8E-02
732	EPSCF2DLLRAAC-ALL	AAC A,B FAIL TO RUN AFTER FIRST HOUR OF OPERATION (CCF)	1.5E-03	3.2E+00	3.3E-03
733	EPSCF2DLADAAC-ALL	AAC A,B FAIL TO START (CCF)	3.1E-04	3.2E+00	6.8E-04
734	EPSCF2DLSRAAC-ALL	AAC A,B FAIL TO RUN DURING FIRST HOUR OF OPERATION (CCF)	2.3E-04	3.2E+00	5.2E-04
735	EPSCF2SEFFAAC-ALL	AAC A,B SEQUENCER FAIL TO OPERATE (CCF)	1.4E-04	3.2E+00	3.2E-04
736	EPSCF2CBFC52AAC2-ALL	EPS 52/AACAP,52/AACBP (BREAKER) FAIL TO CLOSE (CCF)	2.8E-05	3.2E+00	6.4E-05
737	EPSCF2CBSO5AAC2-ALL	EPS 52/AACAP,52/AACBP (BREAKER) SPURIOUS OPEN (CCF)	2.8E-07	3.2E+00	6.4E-07
738	SGNST-BOP1	BO-SIGNAL (TRAIN P1) FAILURE	1.2E-03	3.2E+00	2.7E-03
739	EPPBTSWCCF	AAC SOFTWARE FAILURE CCF	1.0E-04	3.2E+00	2.2E-04
740	EPSCBFC89AACA	EPS 89/AACA (SELECTER CIRCUIT) FAIL TO CLOSE	3.7E-04	3.2E+00	8.2E-04
741	EPSCBFC52AACA	EPS 52/AACA (BREAKER) FAIL TO CLOSE	3.7E-04	3.2E+00	8.2E-04
742	EPSCBFO52EPSA	EPS 52/EPSA (BREAKER) FAIL TO OPEN	3.7E-04	3.2E+00	8.2E-04

Table 19.1-94 Basic Events (Hardware Failure, Human Error) RAW of POS 8-1 for LPSD PRA (Sheet 54 of 61)

Rank	Basic Event ID	Basic Event Description	Basic Event Probability	RAW	FV Importance
743	EPSCBSO89AACA	EPS 89/AACA (SELECTER CIRCUIT) SPURIOUS OPEN	3.1E-06	3.2E+00	6.8E-06
744	EPSCBSC52EPSA	EPS 52/EPSA (BREAKER) SPURIOUS CLOSE	3.1E-06	3.2E+00	6.8E-06
745	EPSCBSO52AACA	EPS 52/AACA (BREAKER) SPURIOUS OPEN	3.1E-06	3.2E+00	6.8E-06
746	EPSCF2CBFC89AAC-ALL	EPS 89/AACA,D (SELECTER CIRCUIT) FAIL TO CLOSE (CCF)	2.8E-05	3.2E+00	6.2E-05
747	EPSCF2CBFC52AAC-ALL	EPS 52/AACA,D (BREAKER) FAIL TO CLOSE (CCF)	2.8E-05	3.2E+00	6.2E-05
748	EPSCF2CBFO52EPS-ALL	EPS 52/EPSA,D (BREAKER) FAIL TO OPEN (CCF)	2.8E-05	3.2E+00	6.2E-05
749	EPSCF2CBSC52EPS-ALL	EPS 52/EPSA,D (BREAKER) SPURIOUS CLOSE (CCF)	2.8E-07	3.2E+00	6.2E-07
750	EPSCF2CBSO52AAC-ALL	EPS 52/AACA,D (BREAKER) SPURIOUS OPEN (CCF)	2.8E-07	3.2E+00	6.2E-07
751	EPSCF2CBSO89AAC-ALL	EPS 89/AACA,D (SELECTER CIRCUIT) SPURIOUS OPEN (CCF)	2.8E-07	3.2E+00	6.2E-07
752	EPSDLLRAACA	A-AAC FAIL TO LOAD AND RUN AFTER FIRST HOUR OF OPERATION	1.8E-02	3.2E+00	3.9E-02
753	EPSDLADAACA	A-AAC FAIL TO START	4.7E-03	3.2E+00	1.1E-02
754	EPSSEFFAACA	A-AAC SEQUENCER FAIL TO OPERATE	2.9E-03	3.2E+00	6.4E-03
755	EPSDLSRAACA	A-AAC FAIL TO LOAD AND RUN DURING FIRST HOUR OF OPERATION	2.8E-03	3.2E+00	6.2E-03
756	EPSCBFC52AACAP	EPS 52/AACAP (BREAKER) FAIL TO CLOSE	3.7E-04	3.2E+00	8.3E-04

Table 19.1-94 Basic Events (Hardware Failure, Human Error) RAW of POS 8-1 for LPSD PRA (Sheet 55 of 61)

Rank	Basic Event ID	Basic Event Description	Basic Event Probability	RAW	FV Importance
757	EPSCBSO52AACAP	EPS 52/AACAP (BREAKER) SPURIOUS OPEN	3.1E-06	3.2E+00	6.9E-06
758	EPSTRFF001C	C-CLASS 1E 6.9KV-480V STATION SERVICE TRANSFORMER FAIL TO OPERATE	8.2E-06	3.1E+00	1.7E-05
759	EPSBSFFLCC	C-CLASS 1E LOAD CENTER FAILURE	5.8E-06	3.1E+00	1.2E-05
760	EPSBSFFMCCC	C-CLASS 1E 480V MCC FAILURE	5.8E-06	3.1E+00	1.2E-05
761	SGNBTSWCCF2	GROUP-2 APPLICATION SOFTWARE CCF	1.0E-04	3.1E+00	2.1E-04
762	RCSILFFRCS012	RCS WATER LEVEL SENSOR (MIDDLE) RCS-LT-012 FAIL TO OPERATE	3.4E-05	3.1E+00	7.0E-05
763	RSSXVEL144C	NCS-VLV-144C EXTERNAL LEAK LARGE	7.2E-08	3.1E+00	1.5E-07
764	RSSXVEL141C	NCS-VLV-141C EXTERNAL LEAK LARGE	7.2E-08	3.1E+00	1.5E-07
765	RSSXVEL128C	NCS-VLV-128C EXTERNAL LEAK LARGE	7.2E-08	3.1E+00	1.5E-07
766	RSSXVEL125C	NCS-VLV-125C EXTERNAL LEAK LARGE	7.2E-08	3.1E+00	1.5E-07
767	RSSXVEL131C	NCS-VLV-131C EXTERNAL LEAK LARGE	7.2E-08	3.1E+00	1.5E-07
768	EPSCBSO52STLC	EPS 52/STLC (BREAKER) SPURIOUS OPEN	3.0E-06	2.9E+00	5.9E-06
769	EPSCBSO52STHC	EPS 52/STHC (BREAKER) SPURIOUS OPEN	3.0E-06	2.9E+00	5.9E-06
770	EPSCBSO52LCC	EPS 52/LCC (BREAKER) SPURIOUS OPEN	3.0E-06	2.9E+00	5.9E-06

Table 19.1-94 Basic Events (Hardware Failure, Human Error) RAW of POS 8-1 for LPSD PRA (Sheet 56 of 61)

Rank	Basic Event ID	Basic Event Description	Basic Event Probability	RAW	FV Importance
771	EPSCF4CBSO72DB-24	EPS 72/DBA,C (BREAKER) SPURIOUS OPEN (CCF)	3.4E-08	2.7E+00	5.6E-08
772	EPSCF4BYFFBAT-24	A,C CLASS-1E BATTERY FAIL TO OPERATE (CCF)	1.9E-08	2.7E+00	3.1E-08
773	CWSPCBD001C-ABC	NCS-MPP-001C (C-CCW PUMP) FAIL TO RE-START	9.8E-04	2.5E+00	1.5E-03
774	SWSMVOD503C-ABC	EWS-MOV-503C FAIL TO OPEN	9.5E-04	2.5E+00	1.5E-03
775	SWSCVOD602C-ABC	EWS-VLV-602C FAIL TO RE-OPEN	1.1E-05	2.4E+00	1.6E-05
776	CWSCVOD016C-ABC	NCS-VLV-016C FAIL TO RE-OPEN	1.1E-05	2.4E+00	1.6E-05
777	SWSCVOD502C-ABC	EWS-VLV-502C FAIL TO RE-OPEN	1.1E-05	2.4E+00	1.6E-05
778	SWSPMBD001B-ABC	EWS-MPP-001B (B-EWS PUMP) FAIL TO RE-START	1.8E-03	2.4E+00	2.5E-03
779	CWSPCBD001B-ABC	NCS-MPP-001B (B-CCW PUMP) FAIL TO RE-START	9.8E-04	2.4E+00	1.4E-03
780	SWSMVOD503B-ABC	EWS-MOV-503B FAIL TO OPEN	9.5E-04	2.4E+00	1.3E-03
781	EPSBSFFMCC	C-CLASS 1E 6.9KV SWITCHGEAR FAILURE	5.8E-06	2.3E+00	7.6E-06
782	EPSBSFFDCCC	C-CLASS 1E DC SWITCHBOARD	5.8E-06	2.3E+00	7.6E-06
783	RSSMVEL145C	NCS-MOV-145C EXTERNAL LEAK LARGE	2.4E-08	2.3E+00	3.2E-08
784	SWSCVOD502B-ABC	EWS-VLV-502B FAIL TO RE-OPEN	1.1E-05	2.3E+00	1.5E-05

Table 19.1-94 Basic Events (Hardware Failure, Human Error) RAW of POS 8-1 for LPSD PRA (Sheet 57 of 61)

Rank	Basic Event ID	Basic Event Description	Basic Event Probability	RAW	FV Importance
785	CWSCVOD016B-ABC	NCS-VLV-016B FAIL TO RE-OPEN	1.1E-05	2.3E+00	1.5E-05
786	SWSCVOD602B-ABC	EWS-VLV-602B FAIL TO RE-OPEN	1.1E-05	2.3E+00	1.5E-05
787	EPSTRFF001B	B-CLASS 1E 6.9KV-480V STATION SERVICE TRANSFORMER FAIL TO OPERATE	8.2E-06	2.3E+00	1.0E-05
788	EPSBSFFLCB	B-CLASS 1E LOAD CENTER FAILURE	5.8E-06	2.3E+00	7.3E-06
789	EPSBSFFMCCB	B-CLASS 1E 480V MCC FAILURE	5.8E-06	2.3E+00	7.3E-06
790	RSSCF3PMAD001ABC-12	RHS-MPP-001B,C (CS/RHR PUMP) FAIL TO RE-START (CCF)	2.5E-05	2.2E+00	3.1E-05
791	RSSCF3PMYR001ABC-12	RHS-MPP-001B,C (CS/RHR PUMP) FAIL TO RUN (CCF)	1.5E-06	2.2E+00	1.9E-06
792	RSSCF3PMAD001ABC-13	RHS-MPP-001A,B (CS/RHR PUMP) FAIL TO RE-START (CCF)	2.5E-05	2.2E+00	3.1E-05
793	RSSCF3PMYR001ABC-13	RHS-MPP-001A,B (CS/RHR PUMP) FAIL TO RUN (CCF)	1.5E-06	2.2E+00	1.8E-06
794	CHIOO02P+RWS-DP3	(HE) FAIL TO START STANDBY CHARGING PUMP AND REFILL RWSAT WATER FROM RWSP	1.6E-01	2.2E+00	2.3E-01
795	SWSPMBD001C-ABC	EWS-MPP-001C (C-ESW PUMP) FAIL TO RE-START	1.8E-03	2.2E+00	2.1E-03
796	CWSCVOD306A	NCS-VLV-306A FAIL TO OPEN	1.1E-05	2.2E+00	1.3E-05
797	CWSCF2CVOD306AB-ALL	NCS-VLV-306A,B FAIL TO RE-OPEN (CCF)	5.6E-07	2.2E+00	6.6E-07
798	RSSPMBD001B-ABC	RHS-MPP-001B (B-CS/RHR PUMP) FAIL TO RE-START	1.9E-03	2.1E+00	2.2E-03

Table 19.1-94 Basic Events (Hardware Failure, Human Error) RAW of POS 8-1 for LPSD PRA (Sheet 58 of 61)

Rank	Basic Event ID	Basic Event Description	Basic Event Probability	RAW	FV Importance
799	RSSPMYR001B-ABC	RHS-MPP-001B (B-CS/RHR PUMP) FAIL TO RUN	1.1E-04	2.1E+00	1.3E-04
800	EPSCBSO52STLB	EPS 52/STLB (BREAKER) SPURIOUS OPEN	3.0E-06	2.1E+00	3.4E-06
801	EPSCBSO52STHB	EPS 52/STHB (BREAKER) SPURIOUS OPEN	3.0E-06	2.1E+00	3.4E-06
802	EPSCBSO52LCB	EPS 52/LCB (BREAKER) SPURIOUS OPEN	3.0E-06	2.1E+00	3.4E-06
803	CWSORPR035	NCS-FE-035 (ORIFICE) PLUG	2.4E-05	2.1E+00	2.7E-05
804	RSSORPR061	NCS-FE-061 (ORIFICE) PLUG	2.4E-05	2.1E+00	2.7E-05
805	RSSORPR057	NCS-FE-057 (ORIFICE) PLUG	2.4E-05	2.1E+00	2.7E-05
806	RSSSVOM003B	RHS-SRV-003B SPURIOUS OPEN	4.8E-06	2.1E+00	5.4E-06
807	RSSXVPR125B	NCS-VLV-125B PLUG	2.4E-06	2.1E+00	2.7E-06
808	RSSXVPR131B	NCS-VLV-131B PLUG	2.4E-06	2.1E+00	2.7E-06
809	RSSXVPR128B	NCS-VLV-128B PLUG	2.4E-06	2.1E+00	2.7E-06
810	RSSMVPRRHS001B	RHS-MOV-001B PLUG	2.4E-06	2.1E+00	2.7E-06
811	RSSMVPR002B	RHS-MOV-002B PLUG	2.4E-06	2.1E+00	2.7E-06
812	RSSMVOM004B	CSS-MOV-004B SPURIOUS OPEN	9.6E-07	2.1E+00	1.1E-06

Table 19.1-94 Basic Events (Hardware Failure, Human Error) RAW of POS 8-1 for LPSD PRA (Sheet 59 of 61)

Rank	Basic Event ID	Basic Event Description	Basic Event Probability	RAW	FV Importance
813	RSSMVCMRHS001B	RHS-MOV-001B SPURIOUS CLOSE	9.6E-07	2.1E+00	1.1E-06
814	RSSMVCM002B	RHS-MOV-002B SPURIOUS CLOSE	9.6E-07	2.1E+00	1.1E-06
815	RSSORPR053	NCS-FE-053 (ORIFICE) PLUG	2.4E-05	2.1E+00	2.6E-05
816	RSSORPR024	RHS-FE-024 (ORIFICE) PLUG	2.4E-05	2.1E+00	2.6E-05
817	RSSORPR021	RHS-FE-021 (ORIFICE) PLUG	2.4E-05	2.1E+00	2.6E-05
818	RSSORPR001B	RHS-SRO-001B (ORIFICE) PLUG	2.4E-05	2.1E+00	2.6E-05
819	RSSCVOD004B-ABC	RHS-VLV-004B FAIL TO OPEN	1.0E-05	2.1E+00	1.1E-05
820	RSSRHPR001B-ABC	RHS-MHX-001B (B-CS/RHR HX) PLUG / FOUL	8.7E-06	2.1E+00	9.6E-06
821	RSSMVPR145B	NCS-MOV-145B PLUG	2.4E-06	2.1E+00	2.6E-06
822	RSSXVPR144B	NCS-VLV-144B PLUG	2.4E-06	2.1E+00	2.6E-06
823	RSSXVPR141B	NCS-VLV-141B PLUG	2.4E-06	2.1E+00	2.6E-06
824	RSSCVPR004B	RHS-VLV-004B PLUG	2.4E-06	2.1E+00	2.6E-06
825	RSSXVPR013B	RHS-VLV-013B PLUG	2.4E-06	2.1E+00	2.6E-06
826	RSSMVCM145B	NCS-MOV-145B SPURIOUS CLOSE	9.6E-07	2.1E+00	1.1E-06

Table 19.1-94 Basic Events (Hardware Failure, Human Error) RAW of POS 8-1 for LPSD PRA (Sheet 60 of 61)

Rank	Basic Event ID	Basic Event Description	Basic Event Probability	RAW	FV Importance
827	RSSCVOD028B-ABC	RHS-VLV-028B FAIL TO OPEN	1.0E-05	2.1E+00	1.1E-05
828	RSSCVOD022B-ABC	RHS-VLV-022B FAIL TO OPEN	1.0E-05	2.1E+00	1.1E-05
829	RSSCVOD027B-ABC	RHS-VLV-027B FAIL TO OPEN	1.0E-05	2.1E+00	1.1E-05
830	RSSAVOM024B	RHS-AOV-024B SPURIOUS OPEN	4.8E-06	2.1E+00	5.2E-06
831	RSSAVOM021	RHS-FCV-021 SPURIOUS OPEN	4.8E-06	2.1E+00	5.2E-06
832	RSSAVCM023	RHS-HCV-023 SPURIOUS CLOSE	4.8E-06	2.1E+00	5.2E-06
833	RSSMVPR021B	RHS-MOV-021B PLUG	2.4E-06	2.1E+00	2.6E-06
834	RSSCVPR027B	RHS-VLV-027B PLUG	2.4E-06	2.1E+00	2.6E-06
835	RSSMVPR026B	RHS-MOV-026B PLUG	2.4E-06	2.1E+00	2.6E-06
836	RSSAVPR023	RHS-HCV-023 PLUG	2.4E-06	2.1E+00	2.6E-06
837	RSSCVPR022B	RHS-VLV-022B PLUG	2.4E-06	2.1E+00	2.6E-06
838	RSSCVPR028B	RHS-VLV-028B PLUG	2.4E-06	2.1E+00	2.6E-06
839	RSSMVCM021B	RHS-MOV-021B SPURIOUS CLOSE	9.6E-07	2.1E+00	1.0E-06
840	RSSMVOM025B	RHS-MOV-025B SPURIOUS OPEN	9.6E-07	2.1E+00	1.0E-06

Table 19.1-94 Basic Events (Hardware Failure, Human Error) RAW of POS 8-1 for LPSD PRA (Sheet 61 of 61)

Rank	Basic Event ID	Basic Event Description	Basic Event Probability	RAW	FV Importance
841	RSSMVCM026B	RHS-MOV-026B SPURIOUS CLOSE	9.6E-07	2.1E+00	1.0E-06
842	SWSPMBD001A-ABC	EWS-MPP-001A (A-EWS PUMP) FAIL TO RE-START	1.8E-03	2.0E+00	1.9E-03
843	CWSPCBD001A-ABC	NCS-MPP-001A (A-CCW PUMP) FAIL TO RE-START	9.8E-04	2.0E+00	1.0E-03
844	SWSMVOD503A-ABC	EWS-MOV-503A FAIL TO OPEN	9.5E-04	2.0E+00	1.0E-03
845	RSSCF3CVOD004ABC-12	RHS-VLV-004A,B FAIL TO OPEN (CCF)	4.6E-07	2.0E+00	4.7E-07
846	RSSCF3CVOD027ABC-12	RHS-VLV-027A,B FAIL TO OPEN (CCF)	4.6E-07	2.0E+00	4.7E-07
847	RSSCF3CVOD028ABC-12	RHS-VLV-028A,B FAIL TO OPEN (CCF)	4.6E-07	2.0E+00	4.7E-07
848	RSSCF3CVOD022ABC-13	RHS-VLV-022A,B FAIL TO OPEN (CCF)	4.6E-07	2.0E+00	4.7E-07
849	RSSCF3RHPR001ABC-13	RHS-MHX-001A,B (CS/RHR HX) PLUG / FOUL (CCF)	2.4E-07	2.0E+00	2.4E-07

Table 19.1-95 Common Cause Failure FV Importance of POS 8-1 for LPSD PRA

Rank	Basic Event ID	Basic Event Description	Basic Event Probability	FV Importance	RAW
1	EPSCF3DLLRGTG-ALL	CLASS-1E GTG A,B,C FAIL TO LOAD AND RUN AFTER FIRST HOUR OF OPERATION (CCF)	1.1E-03	6.7E-02	6.1E+01
2	SWSCF3PMBD001ABC-ALL	EWS-MPP-001A,B,C (ESW PUMP) FAIL TO RE-START (CCF)	6.0E-05	1.6E-02	2.7E+02
3	EPSCF3DLADGTG-ALL	CLASS-1E GTG A,B,C FAIL TO START (CCF)	2.4E-04	1.4E-02	6.1E+01
4	SGNBTSWCCF1	GROUP-1 APPLICATION SOFTWARE CCF	1.0E-04	1.2E-02	1.2E+02
5	SGNBTSWCCF3	NON-SAFETY (PSMS) APPLICATION SOFTWARE CCF	1.0E-05	1.2E-02	1.2E+03
6	EPSCF3DLSRGTG-ALL	CLASS-1E GTG A,B,C FAIL TO LOAD AND RUN DURING FIRST HOUR OF OPERATION (CCF)	1.8E-04	1.1E-02	6.1E+01
7	CWSCF3PCBD001ABC-ALL	NCS-MPP-001A,B,C (CCW PUMP) FAIL TO RE-START (CCF)	3.3E-05	8.7E-03	2.7E+02
8	SWSCF3MVOD503ABC-ALL	EWS-MOV-503A,B,C FAIL TO OPEN (CCF)	2.5E-05	6.6E-03	2.7E+02
9	EPSCBFO52RAT-ABC	EPS 52/RATA,B,C (BREAKER) FAIL TO OPEN (CCF)	5.2E-06	5.6E-03	1.1E+03
10	EPSCBFO52UAT-ABC	EPS 52/UATA,B,C (BREAKER) FAIL TO OPEN (CCF)	5.2E-06	5.6E-03	1.1E+03

Table 19.1-96 Common Cause Failure RAW of POS 8-1 for LPSD PRA

Rank	Basic Event ID	Basic Event Description	Basic Event Probability	RAW	FV Importance
1	RTPBTSWCCF	BASIC SOFTWARE CCF	1.0E-07	2.9E+04	2.9E-03
2	SWSCF3PMYR001ABC-ALL	EWS-MPP-001A,B,C (EWS PUMP) FAIL TO RUN (CCF)	1.2E-07	1.1E+04	1.3E-03
3	CWSCF3PCYR001ABC-ALL	NCS-MPP-001A,B,C (CCW PUMP) FAIL TO RUN (CCF)	6.7E-08	1.1E+04	7.1E-04
4	CWSCF3RHPF001ABC-ALL	NCS-MHX-001A,B,C (CCW HX) PLUG / FOUL(CCF)	3.6E-08	1.1E+04	3.8E-04
5	EPSCF4CBSO52STH-ALL	EPS 52/STHA,B,C,D (BREAKER) SPURIOUS OPEN (CCF)	1.6E-07	8.3E+03	1.3E-03
6	EPSCF4CBSO52STL-ALL	EPS 52/STLA,B,C,D (BREAKER) SPURIOUS OPEN (CCF)	1.6E-07	8.3E+03	1.3E-03
7	EPSCF4CBSO52LC-ALL	EPS 52/LCA,B,C,D (BREAKER) SPURIOUS OPEN (CCF)	1.6E-07	8.3E+03	1.3E-03
8	EPSCF4CBSO52STL-124	EPS 52/STLA,B,C (BREAKER) SPURIOUS OPEN (CCF)	2.9E-08	8.3E+03	2.4E-04
9	EPSCF4CBSO52STH-123	EPS 52/STHA,B,C (BREAKER) SPURIOUS OPEN (CCF)	2.9E-08	8.3E+03	2.4E-04
10	EPSCF4CBSO52LC-123	EPS 52/LCA,B,C (BREAKER) SPURIOUS OPEN (CCF)	2.9E-08	8.3E+03	2.4E-04

Table 19.1-97 Human Error FV Importance of POS 8-1 for LPSD PRA

Rank	Basic Event ID	Basic Event Description	Basic Event Probability	FV Importance	RAW
1	HPIOO02S-DP2	(HE) FAIL TO START STANDBY SAFETY INJECTION PUMP	5.5E-02	6.0E-01	1.1E+01
2	CHIOO02P	(HE) FAIL TO START STANDBY CHARGING PUMP	2.6E-03	2.9E-01	1.1E+02
3	CHIOO02P+RWS-DP3	(HE) FAIL TO START STANDBY CHARGING PUMP AND REFILL RWSAT WATER FROM RWSP	1.6E-01	2.3E-01	2.2E+00
4	RSSOO02P	(HE) FAIL TO RE-START THE RHR PUMPS WHEN THE LOOP EVENT OCCURS	2.6E-03	2.0E-01	7.8E+01
5	ACWOO02SC	(HE) FAIL TO ESTABLISH THE ALTERNATE CCWS BY FIRE PROTECTION WATER SUPPLY SYSTEM	2.2E-02	1.0E-01	5.5E+00
6	HPIOO02S	(HE) FAIL TO START STANDBY SAFETY INJECTION PUMP	4.9E-03	9.1E-02	2.0E+01
7	RSSOO02LINE+P	(HE) FAIL TO ESTABLISH RHR INJECTION LINE AND START STANDBY PUMP	3.8E-03	6.8E-02	1.9E+01
8	CHIOO02RWS-DP3	(HE) FAIL TO REFILL RWSAT WATER FROM RWSP	1.6E-01	6.7E-02	1.4E+00
9	EPSOO02RDG	(HE) FAIL TO CONNECT THE ALTERNATE AC POWER SOURCE TO CLASS 1E BUS	2.1E-02	4.8E-02	3.2E+00
10	LOAOO02LC	(HE) FAIL TO ISOLATE THE LEAKAGE TRAIN OF RHR SYSTEM	2.6E-03	4.6E-02	1.9E+01

Table 19.1-98 Human Error RAW of POS 8-1 for LPSD PRA

Rank	Basic Event ID	Basic Event Description	Basic Event Probability	RAW	FV Importance
1	CHIOO02P	(HE) FAIL TO START STANDBY CHARGING PUMP	2.6E-03	1.1E+02	2.9E-01
2	RSSOO02P	(HE) FAIL TO RE-START THE RHR PUMPS WHEN THE LOOP EVENT OCCURS	2.6E-03	7.8E+01	2.0E-01
3	HPIOO02S	(HE) FAIL TO START STANDBY SAFETY INJECTION PUMP	4.9E-03	2.0E+01	9.1E-02
4	LOAOO02LC	(HE) FAIL TO ISOLATE THE LEAKAGE TRAIN OF RHR SYSTEM	2.6E-03	1.9E+01	4.6E-02
5	RSSOO02LINE+P	(HE) FAIL TO ESTABLISH RHR INJECTION LINE AND START STANDBY PUMP	3.8E-03	1.9E+01	6.8E-02
6	HPIOO02S-DP2	(HE) FAIL TO START STANDBY SAFETY INJECTION PUMP	5.5E-02	1.1E+01	6.0E-01
7	ACWOO02SC	(HE) FAIL TO ESTABLISH THE ALTERNATE CCWS BY FIRE PROTECTION WATER SUPPLY SYSTEM	2.2E-02	5.5E+00	1.0E-01
8	RWSOO04XV051	(HE) MISALIGNMENT OF RWS-VLV-051 AFTER TEST OR MAINTENANCE	8.0E-04	3.6E+00	2.1E-03
9	EPSOO02RDG	(HE) FAIL TO CONNECT THE ALTERNATE AC POWER SOURCE TO CLASS 1E BUS	2.1E-02	3.2E+00	4.8E-02
10	CHIOO02P+RWS-DP3	(HE) FAIL TO START STANDBY CHARGING PUMP AND REFILL RWSAT WATER FROM RWSP	1.6E-01	2.2E+00	2.3E-01

Table 19.1-99 Hardware Single Failure FV Importance of POS 8-1 for LPSD PRA

Rank	Basic Event ID	Basic Event Description	Basic Event Probability	FV Importance	RAW
1	EPSDLLRAACA	A-AAC FAIL TO LOAD AND RUN AFTER FIRST HOUR OF OPERATION	1.8E-02	3.9E-02	3.2E+00
2	CHIPMBD001A	CVS-MPP-001A (A-CHI PUMP) FAIL TO START	2.0E-03	2.5E-02	1.4E+01
3	EPSDLLREGTGC-ABC	C-CLASS 1E GTG FAIL TO LOAD AND RUN AFTER FIRST HOUR OF OPERATION	1.7E-02	1.1E-02	1.6E+00
4	EPSDLADAACA	A-AAC FAIL TO START	4.7E-03	1.1E-02	3.2E+00
5	EPSDLLREGTGA-ABC	A-CLASS 1E GTG FAIL TO LOAD AND RUN AFTER FIRST HOUR OF OPERATION	1.7E-02	8.0E-03	1.5E+00
6	EPSDLLREGTGB-ABC	B-CLASS 1E GTG FAIL TO LOAD AND RUN AFTER FIRST HOUR OF OPERATION	1.7E-02	7.7E-03	1.4E+00
7	CHIPMAD001A	CVS-MPP-001A (A-CHI PUMP) FAIL TO START	1.5E-03	6.9E-03	5.6E+00
8	EPSSEFFAACA	A-AAC SEQUENCER FAIL TO OPERATE	2.9E-03	6.4E-03	3.2E+00
9	EPSDLSRAACA	A-AAC FAIL TO LOAD AND RUN DURING FIRST HOUR OF OPERATION	2.8E-03	6.2E-03	3.2E+00
10	CVCAVCD024C	RHS-AOV-024C FAIL TO CLOSE	1.2E-03	5.0E-03	5.1E+00

Table 19.1-100 Hardware Single Failure RAW of POS 8-1 for LPSD PRA

Rank	Basic Event ID	Basic Event Description	Basic Event Probability	RAW	FV Importance
1	ACWCVEL306A	NCS-VLV-306A EXTERNAL LEAK LARGE	4.8E-08	3.0E+02	1.4E-05
2	ACWMVEL316A	NCS-MOV-316A EXTERNAL LEAK LARGE	2.4E-08	3.0E+02	7.2E-06
3	CWSPNELCCWB	NCS CWS TRAIN B PIPING EXTERNAL LEAK LARGE	1.1E-06	3.0E+02	3.2E-04
4	CWSPNELCCWA	NCS CWS TRAIN A PIPING EXTERNAL LEAK LARGE	8.8E-07	3.0E+02	2.6E-04
5	CWSPNELCCWA1	NCS CWS A1-HEADER LINE PIPING EXTERNAL LEAK LARGE	8.2E-07	3.0E+02	2.5E-04
6	CWSRIEL001B1	NCS-MHX-001B (B-CCW HX) TUBE EXTERNAL LEAK LARGE	7.2E-07	3.0E+02	2.2E-04
7	CWSRIEL001A1	NCS-MHX-001A (A-CCW HX) TUBE EXTERNAL LEAK LARGE	7.2E-07	3.0E+02	2.2E-04
8	CWSPMEL001B	NCS-MPP-001B (B-CCW PUMP) EXTERNAL LEAK LARGE	1.9E-07	3.0E+02	5.7E-05
9	CWSPMEL001A	NCS-MPP-001A (A-CCW PUMP) EXTERNAL LEAK LARGE	1.9E-07	3.0E+02	5.7E-05
10	HPIXVEL114B	NCS-VLV-114B EXTERNAL LEAK LARGE	7.2E-08	3.0E+02	2.2E-05

Table 19.1-101 Important Operator Actions in POS 4-3

	System	Operator Action Description
1	Alternate Component Cooling Water System	Operator fails to establish the alternate CCWS by fire protection water supply system
2	Chemical and Volume Control System	Operator fails to re-start charging pump and to refill RWSAT water from RWSP when the LOOP occurs
3	Chemical and Volume Control System	Operator fails to refill RWSAT water from RWSP
4	Emergency Electric Power Supply System	Operator fails to connect the alternate AC power source to Class 1E switchgear
5	High Head Injection System	Operator fails to start standby safety injection pump
6	Residual Heat Removal System	Operator fails to isolate the leakage train of RHR system
7	Residual Heat Removal System	Operator fails to establish RHR operation line and start standby CS/RHR pump
8	Residual Heat Removal System	Operator fails to re-start the CS/RHR pumps when the LOOP event occurs

These important operator actions have been selected based on the main operator actions required after the accident and the result of importance analysis.

Table 19.1-102 Important Operator Actions in POS 8-1

	System	Operator Action Description
1	Alternate Component Cooling Water System	Operator fails to establish the alternate CCWS by fire protection water supply system
2	Chemical and Volume Control System	Operator fails to start standby charging pump
3	Chemical and Volume Control System	Operator fails to start standby charging pump and to refill RWSAT water from RWSP
4	Chemical and Volume Control System	Operator fails to refill RWSAT water from RWSP
5	Emergency Electric Power Supply System	Operator fails to connect the alternate AC power source to Class 1E switchgear
6	High Head Injection System	Operator fails to start standby safety injection pump
7	Residual Heat Removal System	Operator fails to isolate the leakage train of RHR system
8	Residual Heat Removal System	Operator fails to establish RHR operation line and start standby CS/RHR pump
9	Residual Heat Removal System	Operator fails to re-start the CS/RHR pumps when the LOOP event occurs

These important operator actions have been selected based on the main operator actions required after the accident and the result of importance analysis

Table 19.1-103 Postulated Important Operator Actions in POS 3

No	System	Description for Postulated Operator Action	Remarks
1	Low Pressure Letdown Line	N/A	This system would be modeled as a mitigation system which prevents reduction of a RCS water level only at the time of mid-loop operation. Therefore, this system is not modeled in POS 3.
2	Heat Removal via SGs	Operator Fails to start standby motor-driven EFW pump and open MSDV (HE)	This system is unavailable in POS 4-3 and POS 8-1 because SGs are isolated from the RCS. On the other hand, the decay heat removal via SGs is available in POS 3.

This table shows only postulated important operator actions different from POS 4-3 and POS 8-1.

Table 19.1-104 Postulated Important Operator Actions in POS 4-1

No	System	Description for Postulated Operator Action	Remarks
1	Heat Removal via SGs	Operator fails to start standby motor-drive EFW pump, open MSDV and close RCS vent (HE)	This system is unavailable in POS 4-3 and POS 8-1 because SGs are isolated from the RCS. On the other hand, the decay heat removal via SGs (reflux cooling) is available in POS 4-1.

This table shows only postulated important operator actions different from POS 4-3 and POS 8-1.

Table 19.1-105 Postulated Important Operator Actions in POS 4-2

No	System	Description for Postulated Operator Action	Remarks
1	Gravity Injection System	Operator fails to establish gravity injection (HE)	In POS 4-3 and POS 8-1, the gravity injection is assumed to be not available because the RCS pressure is not adequate to this function. On the other hand, this function is available in POS 4-2 due to the atmospheric pressure in the RCS.

This table shows only postulated important operator actions different from POS 4-3 and POS 8-1.

Table 19.1-106 Postulated Important Operator Actions in POS 8-2

No	System	Description for Postulated Operator Action	Remarks
1	Gravity Injection System	Operator fails to establish gravity injection (HE)	In POS 4-3 and POS 8-1, the gravity injection is assumed to be not available because the RCS pressure is not adequate to this function. On the other hand, this function is available in POS 8-2 due to the atmospheric pressure in the RCS.

This table shows only postulated important operator actions different from POS 4-3 and POS 8-1.

Table 19.1-107 Postulated Important Operator Actions in POS 8-3

No	System	Description for Postulated Operator Action	Remarks
1	Heat Removal via SGs	Operator fails to start standby motor-driven EFW pump, open MSDV and close RCS vent (HE)	This system is unavailable in POS 4-3 and POS 8-1 because SGs are isolated from the RCS. On the other hand, the decay heat removal via SGs (reflux cooling) is available in POS 8-3.

This table shows only postulated important operator actions different from POS 4-3 and POS 8-1.

Table 19.1-108 Postulated Important Operator Actions in POS 9

No	System	Description for Postulated Operator Action	Remarks
1	Low Pressure Letdown Line	N/A	This system would be modeled as a mitigation system which prevents reduction of a RCS water level only at the time of mid-loop operation. Therefore, this system is not modeled in POS 9.
2	Heat Removal via SGs	Operator fails to start standby motor-driven EFW pump and open MSDV (HE)	This system is unavailable in POS 4-3 and POS 8-1 because SGs are isolated from the RCS. On the other hand, the decay heat removal via SGs is available in POS 9.

This table shows only postulated important operator actions different from POS 4-3 and POS 8-1.

Table 19.1-109 Postulated Important Operator Actions in POS 11

No	System	Description for Postulated Operator Action	Remarks
1	Low Pressure Letdown Line	N/A	This system would be modeled as a mitigation system which prevents reduction of a RCS water level only at the time of mid-loop operation. Therefore, this system is not modeled in POS 11.
2	Heat Removal via SGs	Operator fails to start standby motor-driven EFW pump and open MSDV (HE)	This system is unavailable in POS 4-3 and POS 8-1 because SGs are isolated from the RCS. On the other hand, the decay heat removal via SGs is available in POS 11.

This table shows only postulated important operator actions different from POS 4-3 and POS 8-1.

Table 19.1-110 Important SSCs of each System in POS 4-3 (Sheet 1 of 2)

No	System	Description	Remarks
1	Low Pressure Letdown Line	Low pressure letdown line isolation valves (RHS-AOV-024B, C) Low pressure letdown line air operated valve (CVS-HCV-012)	
2	Residual Heat Removal System	CS/RHR pump suction motor operated isolation valves (RHS-MOV-001A, B, C, D, and RHS-MOV-002A, B, C, D) CS/RHR pumps (RHS-MPP-001A, B, C, D) RHR line containment isolation motor operated valves (RHS-MOV-021A, B, C, D) RCS cold leg injection line motor operated valves (RHS-MOV-026A, B, C, D)	
3	Heat Removal via SGs	N/A	This system is not available in POS 4-3 due to the SG isolation.
4	High Head Injection System	SI pumps (SIS-MPP-001B, D)	SI pump A and C are outage in POS 4-3.
5	Chemical and Volume Control System	Charging pump B (CVS-MPP-001B) Volume control tank discharge line motor operated valves (CVS-LCV-031B, C) Charging pump RWAT suction isolation motor operated valves (CVS-LCV-031D, E, F, G) Refueling water storage auxiliary tank suction line manual valve (CVS-VLV-591) Refueling water storage auxiliary tank (RWS-MTK-002)	Charging pump A is outage in POS 4-3.
6	Gravity Injection System	N/A	This system is assumed to be not available in POS 4-3.
7	Emergency Electric Power Supply System	Class 1E gas turbine generators (A, B, C, D) Class 1E 6.9kV switchgear incoming breaker (A, B, C, D) AAC (P1, P2)	
8	Component Cooling Water System	CCW pumps (NCS-MPP-001A, B, C, D) CCW heat exchangers (NCS-MHX-001A, B, C, D)	
9	Essential Service Water System	ESW pumps (EWS-MPP-001A, B, C, D)	

Table 19.1-110 Important SSCs of each System in POS 4-3 (Sheet 2 of 2)

No	System	Description	Remarks
10	Alternate Component Cooling Water System	Motor driven / diesel driven fire protection water pumps Alternate component cooling water line motor operated valves (NCS-MOV-321B, 322B, 324B, 325B) Charging pump cooling line isolation motor operated valves (NCS-MOV-316B)	Charging pump A is outage in POS 4-3.

These important SSCs have been selected based on the result of importance analysis and the active component

Table 19.1-111 Important SSCs of each System in POS 8-1 (Sheet 1 of 2)

No	System	Description	Remarks
1	Low Pressure Letdown Line	Low pressure letdown line isolation valves (RHS-AOV-024B, C) Low pressure letdown line air operated valve (CVS-HCV-012)	
2	Residual Heat Removal System	CS/RHR pump suction motor operated isolation valves (RHS-MOV-001A, B, C, and RHS-MOV-002A, B, C) CS/RHR pumps (RHS-MPP-001A, B, C) RHR line containment isolation motor operated valves (RHS-MOV-021A, B, C) RCS cold leg injection line motor operated valves (RHS-MOV-026A, B, C)	CS/RHR pump D is outage in POS 8-1.
3	Heat Removal via SGs	N/A	This system is not available in POS 8-1 due to the SG isolation.
4	High Head Injection System	SI pumps (SIS-MPP-001A, C)	SI pump B, D are outage in POS 8-1.
5	Chemical and Volume Control System	Charging pump A (CVS-MPP-001A) Volume control tank discharge line motor operated valves (CVS-LCV-031B, C) Charging pump RWAT suction isolation motor operated valves (CVS-LCV-031D, E, F, G) Refueling water storage auxiliary tank suction line manual valve (CVS-VLV-591) Refueling water storage auxiliary tank (RWS-MTK-002)	Charging pump B is outage in POS 8-1.
6	Gravity Injection System	N/A	This system is assumed to be not available in POS 8-1.

Table 19.1-111 Important SSCs of each System in POS 8-1 (Sheet 2 of 2)

No	System	Description	Remarks
7	Emergency Electric Power Supply System	Class 1E gas turbine generators (A, B, C) Class 1E switchgear incoming breaker (A, B, C) AAC gas turbine generators (P1, P2)	Class 1E GTG D is outage in POS 8-1.
8	Component Cooling Water System	CCW pumps (NCS-MPP-001A, B, C) CCW heat exchangers (NCS-MHX-001A, B, C)	CCW pump D and heat exchanger D are outage in POS 8-1.
9	Essential Service Water System	ESW pumps (EWS-MPP-001A, B, C, D)	
10	Alternate Component Cooling Water System	Motor driven / diesel driven fire suppression pumps Alternate component cooling water line motor operated valves (NCS-MOV-321A, 322A, 324A, 325A) Charging pump cooling line isolation motor operated valves (NCS-MOV-316A)	Charging pump B is outage in POS 8-1.

These important SSCs have been selected based on the result of importance analysis and the active component.

Table 19.1-112 Postulated Important SSCs in POS 3

No	System	Description	Remarks
1	Low Pressure Letdown Line	N/A	This system would be modeled as a mitigation system which prevents reduction of a RCS water level only at the time of mid-loop operation. Therefore, this system is not modeled in POS 3.
2	Heat Removal via SGs	Motor driven EFW pump C (EFS-MPP-001C) Main steam depressurization valves (MSS-MOV-508C, D)	This system is unavailable in POSs 4-3 and 8-1 because of SG isolation. But, the system is available in POS 3. Motor driven EFW pump B and MSDVs A and B are outage.

Compared with POS 4-3 and POS 8-1, only different important SSCs are described in this table.
Other important SSCs are the same as POS 4-3 and POS 8-1.

Table 19.1-113 Postulated Important SSCs in POS 4-1

No	System	Description	Remarks
1	Heat Removal via SGs	Motor driven EFW pump C (EFS-MPP-001C) Main steam depressurization valves (MSS-MOV-508C, D) Pressurizer vent line valve (RCS-VLV-153)	This system is unavailable in POSs 4-3 and 8-1 because of SG isolation. But, the system is available in POS 4-1. Motor driven EFW pump B and MSDVs A and B are outage.

Compared with POS 4-3 and POS 8-1, only different important SSCs are described in this table.
Other important SSCs are the same as POS 4-3 and POS 8-1.

Table 19.1-114 Postulated Important SSCs in POS 4-2

No	System	Description	Remarks
1	Gravity Injection System	Spent fuel pit (SFS-MPT-001) CS/RHR-Spent fuel pit boundary manual valves (suction line) (RHS-VLV-033B, C, RHS-VLV-034B, C) Refueling water recirculation pump (RWS-MPP-001A, B) Spent fuel pit suction line from refueling water storage pit	This system is unavailable in POSs 4-3 and 8-1. But, the system is available in POS 4-2 because of the atmospheric pressure in the RCS.

Compared with POS 4-3 and POS 8-1, only different important SSCs are described in this table.
Other important SSCs are the same as POS 4-3 and POS 8-1.

Table 19.1-115 Postulated Important SSCs in POS 8-2

No	System	Description	Remarks
1	Gravity Injection System	Spent fuel pit (SFS-MPT-001) CS/RHR-Spent fuel pit boundary manual valves (suction line) (RHS-VLV-033B, C, RHS-VLV-034B, C) Refueling water recirculation pump (RWS-MPP-001A, B) Spent fuel pit suction line from refueling water storage pit	This system is unavailable in POSs 4-3 and 8-1. But, the system is available in POS 8-2 because of the atmospheric pressure in the RCS.

Compared with POS 4-3 and POS 8-1, only different important SSCs are described in this table.
Other important SSCs are the same as POS 4-3 and POS 8-1.

Table 19.1-116 Postulated Important SSCs in POS 8-3

No	System	Description	Remarks
1	Heat Removal via SGs	Motor driven EFW pump EFS-MPP-001B) Main steam depressurization valves (MSS-MOV-508A, B, C, D) Pressurizer vent line valve (RCS-VLV-153)	This system is unavailable in POSs 4-3 and 8-1 because of SG isolation. But, the system is available in POS 8-3. Motor driven EFW pump C is outage.

Compared with POS 4-3 and POS 8-1, only different important SSCs are described in this table.
Other important SSCs are the same as POS 4-3 and POS 8-1.

Table 19.1-117 Postulated Important SSCs in POS 9

No	System	Description	Remarks
1	Low Pressure Letdown Line	N/A	This system would be modeled as a mitigation system which prevents reduction of a RCS water level only at the time of mid-loop operation. Therefore, this system is not modeled in POS 9.
2	Heat Removal via SGs	Motor driven EFW pump (EFS-MPP-001B) Main steam depressurization valves (MSS-MOV-508A, B, C, D)	This system is unavailable in POSs 4-3 and 8-1 because of SG isolation. But, the system is available in POS 9. Motor driven EFW pump C is outage.

Compared with POS 4-3 and POS 8-1, only different important SSCs are described in this table.
Other important SSCs are the same as POS 4-3 and POS 8-1.

Table 19.1-118 Posulated Important SSCs in POS 11

No	System	Description	Remarks
1	Low Pressure Letdown Line	N/A	This system would be modeled as a mitigation system which prevents reduction of a RCS water level only at the time of mid-loop operation. Therefore, this system is not modeled in POS 11.
2	Heat Removal via SGs	Motor driven EFW pump (EFS-MPP-001B) Main steam depressurization valves (MSS-MOV-508A, B, C, D)	This system is unavailable in POSs 4-3 and 8-1 because of SG isolation. But, the system is available in POS 11. Motor driven EFW pump C is outage.

Compared with POS 4-3 and POS 8-1, only different important SSCs are described in this table.
Other important SSCs are the same as POS 4-3 and POS 8-1.

Table 19.1-119 Key Insights and Assumptions (Sheet 1 of 50)

Key Insights and Assumptions	Dispositions
Design features and insights	
1. High Head Safety Injection System	
- The high head safety injection system consists of four independent and dedicated SI pump trains.	6.3.2.1.1
- The SI pump trains are automatically initiated by ECCS actuation signal, and supply borated water from the RWSP to the reactor vessel via direct vessel injection line.	6.3.2.1.1
- Each SI pump is connected to a dedicated direct vessel injection nozzle for injection into the reactor downcomer region.	6.3.2.1.1
- SI pump suction isolation valves (SIS-MOV-001A/B/C/D) remain open during normal and emergency operations. These valves are remotely closed by operator action from MCR or RSC to isolate RWSP to terminate leak or if pump/valve maintenance requires it.	6.3.2.2.6.1
- This system provides the safety injection function during LOCA events and feed and bleed operation.	6.3.3 19.2.5 COL13.5(6) COL19.3(6)
- During plant shutdown, safety injection provides RCS makeup function in loss of RHRS. In the case of failure of operable SI pump, the pumps that are locked out for LTOP compliance can be used if available.	5.2.2.1.2 5.2.2.2.2.2 19.2.5 COL13.5(6) COL19.3(6)
- SI pump can be manually actuated by DAS from MCR.	7.8.1.1.1 Table 7.8-5
- SI pumps are operable regardless of HVAC system of the safeguard component area within mission time.	Table 19.1-180

Table 19.1-119 Key Insights and Assumptions (Sheet 2 of 50)

Key Insights and Assumptions	Dispositions
2. Accumulator System	
- There are four accumulators, one supplying each reactor coolant cold leg.	6.3.2.1.2
- The accumulators incorporate internal passive flow dampers, which function to inject a large flow to refill the reactor vessel in the first stage of injection, and then reduce the flow as the accumulator water level drops. Thus the accumulators provide integrated function of low head injection system in the event of LOCA.	6.3.2.1.2
- The accumulator with flow damper has the low head injection function.	Table 6.3-4
- In the large-break LOCA, the system supply large injection flow rate initially and automatically switched to small injection flow rate.	6.3.3
- Normally open motor-operated valve (SIS-MOV-101A/B/C/D) which has its control power locked out during normal plant operation. The valves are closed only during normal shutdown operation to prevent the accumulator from inadvertently discharging into the RCS during cooldown. If the valves are closed, these valves are automatically opened upon the receipt of ECCS actuation signal.	6.3.2.2.6.6

Table 19.1-119 Key Insights and Assumptions (Sheet 3 of 50)

Key Insights and Assumptions	Dispositions
3. Chemical and Volume Control System	
- The CVCS provides a means to maintain a programmed inventory of reactor coolant during all phases of plant operation.	9.3.4.1.2.1
- The CVCS continuously supplies seal water to the reactor coolant pump seals, as required by the reactor coolant pump design.	9.3.4.1.2.4 9.3.4.2.7.2
- The charging pumps are arranged in parallel with common suction and discharge headers. Each pump provides full capability for normal makeup.	9.3.4.2.6.1
- Charging injection is provided by the CVCS. One CVCS charging pump is capable of maintaining normal RCS inventory with small system leak if the leakage rate is less than that from a break of a pipe 3/8 inch in inside diameter.	9.3.4.2.7.4
- Normally, one charging pump is operating and takes suction from the VCT, supplies charging flow to the RCS and seal water to the reactor coolant pumps. The flow rate of the charging pump is controlled by the flow control valve located in the charging line and the flow control valve located in the reactor coolant pump seal injection line	9.3.4.2.1 9.3.4.2.6.1 9.3.4.2.7.2
- The pump can take suction from the VCT, the reactor makeup control system, the refueling water storage auxiliary tank and the spent fuel pit.	9.3.4.2.6
- During normal operation, the VCT water level is controlled by automatic makeup. In case the automatic makeup fails to actuate and the water level in the VCT decreases, low VCT water level is detected and actuates a low-low level signal that opens the stop valves in the refueling water storage auxiliary tank supply line, and closes No. 1 and No. 2 stop valves in the VCT outlet to provide emergency makeup.	9.3.4.2.1 9.3.4.5.4.1
- Two centrifugal boric acid transfer pumps are utilized for the transfer and circulation of the boric acid solution in the two boric acid tank.	9.3.4.2.3.1 9.3.4.2.6.2 9.3.4.2.6.9
- During plant shutdown, when the RHR system is in operation, the RHR system provides reactor coolant to the CVCS, upstream of the letdown heat exchanger in the letdown line.	9.3.4.2.7.3
- During plant shutdown, charging injection provides RCS makeup function in loss of RHRS. In the case of failure of operable charging pump, the pumps that are locked out for LTOP compliance can be used if available.	5.2.2.1.2 5.2.2.2.2.2 19.2.5 COL 13.5(7) COL 19.3(6)

Table 19.1-119 Key Insights and Assumptions (Sheet 4 of 50)

Key Insights and Assumptions	Dispositions
4. Containment Spray System / Residual Heat Removal System	
- The containment spray system (CSS) and the residual heat removal system (RHRS) share major components which are containment spray/residual heat removal (CS/RHR) pumps and heat exchangers.	5.4.7.1 5.4.7.2.1 6.2.2 6.2.2.1 6.2.2.2
- The CSS/RHRS consists of four independent subsystems, each of which receives electrical power from one of four safety buses. Each subsystem includes one CS/RHR pump and one CS/RHR heat exchanger, which have functions in both the CS system and the RHRS.	6.2.2 5.4.7.2.1
- All four CS/RHR pumps automatically start to supply water in RWSP and containment spray header isolation valves are open automatically on the receipt of a containment spray signal.	6.2.2.2.1 6.2.2.2.7.2
- CSS/RHRS provides multiple functions such as,	3.2.2
(1) containment spray to decrease pressure and temperature in the containment, (2) alternate core cooling in case all safety injection systems fails during LOCA in conjunction with a fast depressurization of the RCS by using the EFW pumps to remove heat through the SGs and by manually opening the MSDVs especially in high RCS pressure sequences, (3) RHR operation for long term core cooling, (4) heat removal function for long term containment cooling, (5) providing water to flood the reactor cavity and (6) fission product removal. (7) During plant shutdown, RHRS provides function to remove decay heat from the RCS.	6.2.2 6.2.2.1 6.2.5 5.4.7.1 5.4.7.2.1 5.4.7.2.3.3 19.2.5 COL 13.5(6) COL 19.3(6)
- The RHRS is designed and equipped with pressure relief valves to prevent RHRS over-pressurization and low temperature over-pressurization.	5.4.7.1
- Two motor operated valves in series on the RHR suction line with power lockout capability during normal power operation minimize the probability of RCS pressure entering the RHR system. Even if both these valves are opened during normal power operation, the RHR system is designed to discharge the RCS inventory to the in-containment RWSP. The RHRS is designed to prevent an interfacing system LOCA by having a design rating of 900 lb. The RHR 900 lb. design rated system can withstand the full RCS pressure. The current values are in accordance with Section III of the ASME Code for Service Level A.	6.3.1.4 5.4.7.1 5.4.7.2.1 5.4.7.2.2 Table 5.4.7-2

Table 19.1-119 Key Insights and Assumptions (Sheet 5 of 50)

Key Insights and Assumptions	Dispositions
- The RHR system is used to provide core cooling when the RCS must be partially drained to allow maintenance or inspection of the reactor head, SGs, or reactor coolant pump seals.	5.4.7.2.3.6
- When the RCS temperature and pressure are reduced to 350°F and 400 psig, the RHRS provides the heat removal function.	5.4.7.2.3.3 19.1.6
- During mid-loop operation, low-pressure letdown line isolation valves, which are air-operated valves, are automatically closed to isolate CVCS from RHRS by detection of RCS loop low-level signal. This interlock is useful to prevent loss of reactor coolant inventory.	5.4.7.2.2.3 5.4.7.2.3.6 7.6.1.7 TS 3.4.8 TS 3.9.6
- The containment spray/residual heat removal pump full-flow test line stop valves (RHS-MOV-025A/B/C/D) are locked closed.	5.4.7.2.2.3
- CS/RHR pumps are operable regardless of HVAC system of the safeguard component area within mission time.	Table 19.1-180

Table 19.1-119 Key Insights and Assumptions (Sheet 6 of 50)

Key Insights and Assumptions	Dispositions
5. Refueling Water Storage Pit	
- The RWSP is located on the lowest floor inside the containment. The coolant and associated debris from a pipe or component rupture (LOCA), and the containment spray drain into the RWSP through overflow pipes.	6.3.2.2.4 6.2.2.2.5
- Four independent sets of ECC/CS strainers are located in the RWSP as part of the ECCS and CSS. The strainer design includes redundancy, a large surface area to account for potential debris blockage and maintain safety performance, corrosion resistance, and a strainer hole size to minimize downstream effects.	6.3.2.2.4 6.2.2.2.6
- The RWSP is the protected, reliable, and safety-related source of boric acid water for the containment spray and safety injection.	6.2.2.2.5
- The RWSP is designed to with sufficient capacity to meet long-term post-LOCA coolant needs, including holdup volume losses.	6.2.2.2.5
- The RWSP also is used to fill the refueling cavity in support of refueling operations.	6.2.2.2.5

Table 19.1-119 Key Insights and Assumptions (Sheet 7 of 50)

Key Insights and Assumptions	Dispositions
6. Reactor Trip System	
- Reactor trip signal is provided by the reactor protection system (RPS), which consists of four redundant and independent trains. Four redundant measurements using sensors from the four separate trains are made for each variable used for reactor trip.	7.2.1
- One channel of sensor is allowed to be unlimitedly bypassed. One train of reactor trip breaker is allowed to be unlimitedly bypassed.	16.3.3
- Each train of the RPS consists of two separate digital controllers to achieve defense-in-depth through functional diversity. Two different parameters are monitored by the separate sensors that interface to separate digital controllers within the PRS. Each functionally diverse digital controller within a train can initiate a partial reactor trip signal.	7.2.1.2 7.2.1.9
- The PRS generate a reactor trip signal if two or more trains of the same variable such as pressurizer pressurel or SG water level are in the partial trip state.	7.2.1 7.2.1.2 7.2.1.3 7.2.1.8
- The configuration of four trains with two-out-of-four voting logic is provided from sensors to reactor trip breakers in the PRS for most reactor trip signal.	7.2.1.8
- Reactor trip can be manually and automatically achieved by DAS against software failure of the digital I&C system.	7.2.1.9 7.8.1.1.1 7.8.1.2.1 Table 7.8-1 Table 7.8-5

Table 19.1-119 Key Insights and Assumptions (Sheet 8 of 50)

Key Insights and Assumptions	Dispositions
7. Engineered Safety Function System	
- There are four redundant engineered safety function (ESF) trains. Within each train, ESF actuation system (ESFAS) and signal logic system (SLS) controllers are redundant.	7.3.1 7.3.1.1 7.3.1.8
- All ESF systems are automatically initiated from signals that originate in the RPS. Manual actuation of ESF systems is carried out through a diverse signal path that bypasses the RPS.	7.3.1.9
- Each train of the ESF system provides ESF actuation signals from all PRS trains using two-out-of-four voting logic to SLS which consists of multiple controllers in each train.	7.1.1.3 7.3.1 7.3.1.2
- The SLS receives signals from the DAS to actuate ESF plant components. These signals are interfaced from DAS via qualified isolators within the SLS. The SLS provides priority logic to combine the DAS and SLS signals and to ensure the safety function always has priority.	7.3.1.9
- ECCS actuation signal is generated by several variables such as Low pressurizer pressure or High containment pressure.	7.3.1.5.1 Table 7.3-3 Table 7.3-4
- Containment spray signal is generated by several variables such as High containment pressure.	7.3.1.5.3 Table 7.3-3 Table 7.3-4

Table 19.1-119 Key Insights and Assumptions (Sheet 9 of 50)

Key Insights and Assumptions	Dispositions
8. Diverse Actuation System	
- Non-safety DAS, which is completely diverse to the RPS, provides monitoring and control of safety-related and non safety-related plant systems.	7.2.1.9
- The diverse actuation system (DAS) provides monitoring, control and actuation of safety and non-safety systems required to cope with abnormal plant conditions concurrent with a CCF that disables all functions of the PSMS and PCMS.	7.8
- DAS which has function to prevent ATWS is installed as a countermeasure to CCF of the digital I&C systems.	7.8.2.2 7.8.3.1
- A software CCF within the PSMS and PCMS does not affect the DAS automation function or the display of plant parameters on the diverse HIS panel.	7.8.1.2 7.8.2.2
- DAS design consists of conventional equipment that is totally diverse and independent from the MELTAC platform of the PSMS and PCMS, so that a beyond design basis CCF in these digital systems will not impair the DAS functions.	7.8.2.2
- Key parameter indications, diverse audible and visual alarms, and provisions for manual controls are located in a dedicated independent DHP located in the MCR.	7.8 7.8.1.3 Table 7.8-2
- DAS hardware for anticipated transient without scram (ATWS) mitigation functions – Reactor trip, turbine trip, and EFW actuation, is diverse from the reactor trip hardware used in the PSMS. The reactor trip is actuated by tripping the non-safety CRDM motor-generator set.	7.8.1.2.1 7.8.1.1.2 7.8.2.2
- The DAS is electrically and physically isolated from the PSMS.	7.8.2.3

Table 19.1-119 Key Insights and Assumptions (Sheet 10 of 50)

Key Insights and Assumptions	Dispositions
9. Emergency Feedwater System	
- EFWS, which consists of two motor-driven pumps and two steam turbine-driven pumps with two emergency feedwater pits , is designed to remove decay heat through the SGs following transient conditions or postulated accidents.	10.4.9 10.4.9.1 10.4.9.2
- The EFWS supply feedwater to the SGs whenever RCS temperature above 350°F and the main feedwater system is not in operation.	10.4.9
- The EFWS is designed with two 50% EFW pits, both pits together provide a sufficient volume of water required for the emergency condition.	10.4.9.2 10.4.9.2.1
- Each EFW pump discharge line connects with a tie line with a motor-operated isolation valve. During normal plant operation (at non-OLM), the discharge tie line isolation valves of each EFW pump discharge tie line are in the closed position to provide separation of four trains. During OLM, the tie line isolation valves of each EFW pump discharge tie line are kept in the open position.	10.4.9.2 10.4.9.2.1
- Upon detection of a water level increase of the SG, the EFW isolation valves and EFW control valves are automatically closed.	10.4.9.2 7.3.1.5.10 Table 7.3-3
- The motor-operated EFW isolation valves and EFW control valves are provided in each EFW pump discharge line to close automatically to terminate the flow to the affected SG.	10.4.9.2
- The common suction line from each EFW pit is connected by a tie line with two normally closed manual valves. When the two EFW pumps taking suction from the same pit are not available (OLM of one EFW pump and the single failure of other EFW pump), the tie line connections to EFW pits need to be established.	10.4.9.2
- The demineralized water storage tank provides a backup source for EFWS. The manual valves from the demineralized water storage tank to the EFW pumps are normally closed.	10.4.9.2.1
- To cope with common cause failure of EFW pit water level sensors, a non-safety water level sensor diverse from the safety related water level sensors are installed in each EFW pit. Low water level in the EFW pit can be detected by these non-safety sensors. Accordingly, the operator can recognize the low water level in the EFW pit during EFW pump operation with high reliability.	10.4.9.2.4

Table 19.1-119 Key Insights and Assumptions (Sheet 11 of 50)

Key Insights and Assumptions	Dispositions
- The EFWS is automatically initiated by EFW actuation signal or by DAS.	7.3.1.5.9 7.8.1.2.2 Table 7.8-5 10.4.9.1
- The EFWS design is provided with the capability to automatically terminate EFW flow to a depressurized (faulty) SG and to automatically provide EFW to the intact SGs.	7.2.1.5.10 10.4.9.1 10.4.9.2 10.4.9.2.1
- The system supplies feedwater to the SGs at a sufficient flow rate to meet the requirements for the transient conditions or postulated accidents and hot standby.	10.4.9
- Motor-driven EFW pumps require room cooling for operation. On the other hand, turbine-driven EFW pumps are operable regardless of room cooling.	Table 19.1-180
- The EFWS is automatically initiated by the receipt of the EFW actuation signal such as the low SG water level signal.	10.4.9.1 10.4.9.2.1 7.3.1.5.9 Table 7.3-3

Table 19.1-119 Key Insights and Assumptions (Sheet 12 of 50)

Key Insights and Assumptions	Dispositions
10. Reactor Coolant System High Point Vents	
- Safety depressurization valves (SDVs) and depressurization valves (DVs) are provided at top head of the pressurizer in order to cool the reactor core by feed and bleed operation when loss of heat removal from steam generator occurs.	5.4.12.2 19.2.5 COL 13.5(6) COL 19.3(6)
- RCS depressurization system dedicated for severe accident is provided to prevent high pressure melt ejection. The location of release point from the valve is in containment dome area.	5.4.12.2
- Safety depressurization valves can be manually actuated by DAS.	7.8.1.1.1 Table 7.8-5
11. Main Steam Supply System	
- The system consists of MSRV, MSDV, MSSVs, and MSIV in each main steam line and TBVs.	10.3 10.3.1.1
- Six MSSVs are provided per each main steam line and are located in the main steam piping upstream of the MSIVs. The MSSVs have the three kind of set pressure.	10.3.2.3.2 Table 10.3.2-2
- One air-operated MSRV and one motor-operated MSDV are installed on each main steam line piping.	10.3.2.3.3
- MSIVs are installed in each of the main steam lines to (1) limit uncontrolled steam release from one steam generator in the event of a steam line break, and to (2) isolate the faulted SG in the event of SGTR.The valve is designed to fully close by receipt the signal such as low main steam line pressure.	10.3.2.1 10.3.2.3.4
- In LOCA event with failure of all HHISs, operators open MSDVs to depressurize the RCS for alternate core injection.	19.2.5 COL 13.5(6) COL 19.3(6)
- During shutdown operation, when the RCS is mid-loop state with the closed state, operators open MSDVs for heat removal via SGs.	19.2.5 COL 13.5(7) COL 19.3(6)

Table 19.1-119 Key Insights and Assumptions (Sheet 13 of 50)

Key Insights and Assumptions	Dispositions
12. Component Cooling Water System	
- The CCWS consists of two independent subsystems. One subsystem consists of trains A & B, and the other subsystem consists of trains C & D, for a total of four trains. Each train has one CCW pump and CCW heat exchanger. Each subsystem is served by one CCW surge tank.	9.2.2.1.1 9.2.2.2
- The CCWS is designed to withstand leakage in one train without loss of the system's safety function.	9.2.2.1.1
- Two motor operated valves are located at the CCW outlet of the RCP thermal barrier Hx and close automatically upon a high flow rate signal at the outlet of this line in the event of in-leakage from the RCS through the thermal barrier Hx, and prevents this in-leakage from further contaminating the CCWS.	9.2.2.2.1.5
- During normal operation, heat loads of the CCWS are RCP, charging pump, letdown heat exchanger, instrument air, spent fuel pit cooling heat exchanger, etc.	9.2.2.1.2.1
- Normally open header tie line isolation valves, which are motor-operated valves, is automatically closed upon detection of ECCS actuation signal and under voltage signal or containment spray signal to separate each subsystem into two independent trains.	9.2.2.2.1.5
- CS/RHR heat exchanger outlet valves, which are motor-operated valves, are normally closed and automatically are opened by ECCS actuation signal.	9.2.2.2.1.5
- During normal operation, at least one train in each subsystem is operable. Total of two CCWP and two CCW heat exchangers are in operation. During accident, all CCWPs are automatically actuated by ECCS actuation signals.	9.2.2.2.2.1 9.2.2.2.2.4
- During a severe accident event, it is assumed that the containment fan cooler unit fans are non-operable and that the non-essential chilled water system is unavailable. Valves are provided to manually align the CCW to the containment fan cooler unit cooling coils. This supplies CCW to the cooling coils in the containment fan cooler unit for long term containment cooling.	9.4.6.2.1 19.2.5 COL 13.5(6) COL 19.3(6)
- In the case of loss of CCW, a non-essential chilled water system or a fire system is able to connect to the CCWS in order to cool the charging pump and maintain RCP seal water injection.	19.2.5 COL 13.5(6) COL 13.5(7) COL 19.3(6)

Table 19.1-119 Key Insights and Assumptions (Sheet 14 of 50)

Key Insights and Assumptions	Dispositions
13. Essential Service water system	
- The ESWS is arranged into four independent trains (A, B, C, and D). Each train consists of one ESWP, two 100% strainers in the pump discharge line, one 100% strainer upstream of the CCW HX, one CCW HX, one essential chiller unit, and associated piping, valves, instrumentation and controls.	9.2.1 9.2.1.2.1 9.2.1.2.3.1 COL 9.2(3) COL 9.2(4)
- The case where ESW pump motors are air-cooled has a small impact on PRA results because the HVAC system for the ESW pump room is reliable due to operator backup.	COL 9.2(6) COL 13.5(5)
- In the case where ESW pump motors are air-cooled, backup actions can avoid excessive room heat up in the event of loss of ESW pump room ventilation. Operational procedures to avoid excessive room heat up will be prepared.	9.2.1.2.2.1 COL 9.2(6) COL 13.5(5)
- During normal operation, two trains are operating and at least one other train is on standby.	9.2.1.2.3.1
- The motor-operated valve provided at the discharge of each ESW pump actuates in conjunction with the pump operation. The discharge valves are opened after the ESW pump start.	9.2.1.2.2.6
- During normal operation, two ESW trains are operating and at least one train is on standby.	9.2.1.2.3.1
- The motor-operated valve is provided at the ESWP discharge of each pump. While the ESW pump is running, the valve remains open. The valve position is monitored in the control room.	9.2.1.2.2.6 9.2.1.2.3.1
- All valves except the pump discharge valves in the flow path are locked open.	9.2.1.2.3.1
- When one ESW train is unavailable due to failure of the discharge line valve to open, operators start the standby ESWP, monitoring pump discharge pressure.	9.2.1.2.3.1 19.2.5 COL 13.5(5) COL 13.5(7) COL 19.3(6)

Table 19.1-119 Key Insights and Assumptions (Sheet 15 of 50)

Key Insights and Assumptions	Dispositions
14. Onsite Electric Power System	
- The onsite Class 1E electric power systems comprise four independent and redundant trains, each with its own power supply, buses, transformers, and associated controls.	8.3.1.1 8.3.1.1.2.1 8.3.1.1.3
- One independent Class 1E GTG is provided for each Class 1E train.	8.3.1.1.2.1
- Non-Class 1E 6.9kV permanent buses P1 and P2 are also connected to the non-Class 1E A-AAC GTG and B-AAC GTG, respectively. The loads which are not safety-related but require operation during LOOP are connected to these buses.	8.3.1.1.1
- In the event of SBO, power to one Class 1E 6.9kV bus can be restored manually from the AAC GTG.	8.3.1.1.1 8.3.1.1.2.2 8.3.1.1.2.3 19.2.5 COL 13.5(6) COL 13.5(7) COL 19.3(6)
- Common cause failure between Class 1E GTG and non-Class 1E GTG is minimized by design characteristics. The AAC power source engine and generator are designed by a different manufacturer than the Class 1E EPS engine and generator, and have diverse starting systems, independent and separate auxiliary and support systems.	8.3.1.1.1 8.4.1.3
- The non-Class 1E GTG can be started manually when connecting to the Class 1E bus in the event of SBO.	8.4.1.3
- Power to the shutdown buses can be restored from the AAC sources within 60 minutes	8.4.1.3
- The GTG does not need cooling water system. Cooling of GTG is achieved by air ventilation system	8.3.1.1.3 8.3.1.1.3.10
- GTG combustion air intake and exhaust system for each of the four GTGs supply combustion air of reliable quality to the gas turbine and exhausts combustion products from the gas turbine to the atmosphere. The air intake also provides ventilation/ cooling air to the GTG assembly.	9.5.5 9.5.8

Table 19.1-119 Key Insights and Assumptions (Sheet 16 of 50)

Key Insights and Assumptions	Dispositions
- A-AAC GTG operates automatically by the undervoltage relays on bus P1 and B-AAC GTG operates automatically by the bus undervoltage relays on bus P2 during the LOOP condition. The time is less than 100 seconds after receiving the signal.	8.3.1.1.1 8.3.1.1.3 8.3.1.1.3.1
- The rooms for the A-AAC GTG and B-AAC GTG are physically separated from each other and also from the Class 1E GTG rooms.	8.3.1.1.1
- Normal preferred offsite power is provided from the RATs and the alternate preferred offsite power is provided from the UATs.	8.3.1.1.2.1
- During all modes of plant operation including normal and emergency shutdown, and accident conditions, Class 1E 6.9kV ac buses A and B trains and C and D trains are normally powered from the RAT3 and RAT4, respectively. On the other hand, non-Class 1E ac buses P1 and P2 are supplied power from the UAT3 and UAT4, respectively.	8.3.1.1 8.3.1.1.1 8.3.1.1.2 8.3.1.1.2.4
- Glass 1E GTGs are automatically started by signals such as ECCS actuation signal, under-voltage signal on Class 1E 6.9kV.	8.3.1.1.2.3 8.3.1.1.3.1
- The AAC GTG is started automatically and the incoming breakers from the offsite power supply to 6.9kV permanent bus are tripped by the under-voltage signal on the permanent bus.	8.4.1.3
- GTG can operate regardless of the loss of HVAC case caused by the essential chilled water system.	Table 19.1-180
15. RCP seal	
- RCP seal can keep its integrity for at least one hour without water cooling.	8.4.2.1.2
- If loss of seal injection should occur, CCW continues to provide flow to the thermal barrier heat exchanger; which cools the reactor coolant. The pump is able to maintain safe operating temperatures and operate safely long enough for safe shutdown of the pump.	5.4.1.3.3
- If loss of CCW should occur, seal injection flow continues to be provided to the RCP. The pump is designed so that the seal injection flow is sufficient to prevent damage to the seals with a loss of thermal barrier cooling.	5.4.1.3.4

Table 19.1-119 Key Insights and Assumptions (Sheet 17 of 50)

Key Insights and Assumptions	Dispositions
16. Containment System	
- The containment prevents or limits the release of fission products to the environment.	3.1.2.7 3.8.1
- Hydrogen control system that consists of igniters is provided to limit the combustible gas concentration. Twenty igniters are required to mitigate a challenge to containment integrity from the spectrum of potential hydrogen detonation scenarios for both at-power and LPSD severe accident sequences. The igniters start with the ECCS actuation signal and are powered by two non-Class 1E buses with non-Class 1E GTGs as well as dedicated batteries to 11 strategically located igniters.	6.2.5.2
- Alternate containment cooling system using the containment fan cooler units is provided to prevent containment over pressure even in case of containment spray system failure.	9.4.6.2.1 19.2.5 COL 13.5(6) COL 19.3(6)
- Reactor cavity flooding system by firewater injection is provided to enhance heat removal from molten core ejected into the reactor cavity. This system is available as a countermeasure against severe accidents even in case of fire.	9.5.1.2.2 19.2.5 COL 13.5(6) COL 19.3(6)
- The FSS is also utilized to promote condensation of steam. The FSS is lined up to the containment spray header when the CSS is not functional, and provides water droplet from top of containment. This will temporarily depressurize containment.	9.5.1.2.2 19.2.5 COL 13.5(6) COL 19.3(6)
- A set of drain paths from SG compartment to the reactor cavity is provided in order to achieve reactor cavity flooding. Spray water which flows into the SG compartment drains to the cavity and cools down the molten core after reactor vessel breach.	3.4.1.5.1
- Reactor cavity has a core debris trap area to prevent entrainment of the molten core to the upper part of the containment.	3.8.1 19.2.3.3.4
- Reactor cavity is designed to ensure thinly spreading debris by providing sufficient floor area and appropriate depth.	3.8.1 19.2.3.3.3
- Reactor cavity floor concrete is provided to protect against challenge to liner plate melt through.	3.8.1 19.2.3.3.3
- Main penetrations through containment vessel are isolated automatically with the containment penetration signal even in case of SBO.	6.2.4

Table 19.1-119 Key Insights and Assumptions (Sheet 18 of 50)

Key Insights and Assumptions	Dispositions
17. Essential Chilled Water System	
- The essential chilled water system consists of four independent trains and includes a water-cooled chiller, a chilled water pump, and a compression tank.	9.2.7.2.1 9.2.7.2.1.1
- Upon receipt of ECCS actuation signal, the operating essential chillers and essential chilled water pump continues to run and the standby essential chillers and essential chilled water pumps start.	9.2.7.2.1
- The system provides HVAC system to each room such as EFW pump area.	9.2.7 7.4.1.5
- The operator has the same functional control and monitoring capability at the RSR as in the MCR. The RSC provides equivalent functions of the operational VDUs and the safety VDUs in the MCR. The transfer of control to the RSR has no affect on any non-safety or safety-related control functions, including automatic load sequencing to accommodate LOOP. The operator has complete capability to control all manual and automatic modes. Adequate emergency lighting is provided on the pathways from the MCR to the RSR and to accommodate local effluent sampling.	Table 19.1-180
- Operators open the doors or install temporary fans to prevent room temperature rising in the loss of HVAC for Class 1E electric room.	

Table 19.1-119 Key Insights and Assumptions (Sheet 19 of 50)

Key Insights and Assumptions	Dispositions
18. Main equipment and instrumentations used for severe accident mitigation are designed to perform their function in the environmental conditions such as containment overpressure and temperature rise following hydrogen combustion.	19.2.3.3.7
19. Instrumentations for detecting core damage with high reliability are provided.	5.3.3.1
20. Risk significant SSCs are identified for the RAP.	17.4
21. The in-core instrumentation is inserted through nozzles located in the RV closure head. No penetrations through the RV are located below the top of the reactor core. This minimizes the potential for a loss of coolant accident by leakage from the reactor vessel, allowing the reactor core to be uncovered.	5.3.3.1
22. Check valves in accumulator, high head injection system, and other systems are in diverse configuration because: - The accumulator does not have any pumps to drive upon a failed closed check valve but other systems have pumps so the forces acting on the valves to open them (even if the valves are similar) are different - The duty cycles in the systems are different. They are cycled at different times when the systems are tested. - Maintenance practices including testing may also be different. Common cause failure between the check valves in accumulator and HHIS is therefore not model in the PRA.	19.1.4.1 Table 19.1-38
23. Surveillance test interval and refueling outages are consistent with Technical Specifications.	Chapter 16
24. The availability and reliability of all trains of safety related systems will be controlled by the maintenance and configuration risk management programs. Availability goals will be set for each train of all safety related systems and their availability will be tracked and compared to these goals.	COL 17.6(1)
25. Administrative controls to ensure the availability of AAC as a back up function to the Class 1E GTGs will be implemented.	COL 13.5(5)
26. Administrative controls to ensure the availability of demineralized water storage tank as a back up function to the EFW pits will be implemented.	COL 13.5(5)

Table 19.1-119 Key Insights and Assumptions (Sheet 20 of 50)

Key Insights and Assumptions	Dispositions
Operator actions (At Power)	
1. Operator actions modeled in the PRA are based on symptom oriented procedures. Risk significant operator actions identified in the PRA will be addressed in plant operating procedures including abnormal operating procedure (AOP), emergency operating procedure (EOP), etc.	19.2.5 COL 13.5(5) COL 13.5(6) COL 19.3(6)
2. In the operational VDU of US-APWR, the layout of controllers & monitoring alignment in each window are different and this feature would make the operator perceive them as different locations.	18.4 19.2.5 COL 19.3(6) COL 13.5(5) COL 13.5(6)
3. In the case of loss of CCW, operators connect a non-essential chilled water system or a fire protection water supply system to the CCWS in order to cool the charging pump and maintain RCP seal water injection. This operator action is risk important. Activities to minimizes the likelihood of human error in the human factors engineering is important in developing procedures, training and other human reliability related programs.	18.6 19.1.4 19.2.5 COL 13.5(6) COL 19.6(6)
4. When station blackout occurs, operators connect the alternate ac power to Class 1E bus in order to recovery emergency ac power. This operator action is risk important. Activities to minimizes the likelihood of human error in the human factors engineering is important in developing procedures, training and other human reliability related programs.	18.6 19.2.5 COL 19.3(6) COL 13.5(6)
5. If emergency feed water pumps cannot feed water to two intact SGs, operators will attempt to open the cross tie-line of EFW pump discharge line in order to feed water to two more than SGs by one pump.	19.2.5 COL 19.3(6) COL 13.5(6)

Table 19.1-119 Key Insights and Assumptions (Sheet 21 of 50)

Key Insights and Assumptions	Dispositions
6. The CS/RHR System has the function to inject the water from RWSP into the cold leg piping by switching over the CS/RHR pump lines to the cold leg piping if all safety injection systems failed (Alternate core cooling operation). In high RCS pressure sequences, a fast depressurization of the RCS by using the EFW pumps to remove heat through the SGs and by manually opening the MSRVs allows alternate core cooling injection using the CS/RHR pumps. Alternate core cooling operation may be required under conditions where containment protection signal is valid. In such cases, alternate core cooling operation is prioritized over containment spray, because prevention of core damage would have higher priority than prevention of containment vessel rupture.	19.2.5 COL 19.3(6) COL 13.5(6)
7. When any two EFW pumps that commonly utilize at EFW pit have failed, operators supply water to operating EFW pumps from alternate EFW pit or demineralized water storage pit in order to ensure the water source.	19.2.5 COL 19.3(6) COL 13.5(6)
8. In the case of failure to isolate failed SG, but success to sufficiently depressurize RCS by secondary side cooling and Safety depressurization valve in SGTR event, operators do RCS pressure control in order to prepare to early RHR cooling in order to ensure long term heat removal. (RCS pressure control means stopping SI safety injection and starting charging pump. RCS pressure under SI injection remains higher for connecting RHR system. Charging pump is back up for failure of RHR cooling after stopping SI injection.)	19.2.5 COL 19.3(6) COL 13.5(6)
9. In the case of above, if operators fail to move RHR cooling after SI injection control, operators start to bleed and feed operation. Operators open safety depressurization valve and start the safety injection pump (if standby) in order to ensure long term heat removal.	19.2.5 COL 19.3(6) COL 13.5(6)
10. When the main steam isolation valve fail to close in SGTR event, with status signal of this valve, operators try to close this valve in order to stop leakage of RCS coolant from the failed SG.	19.2.5 COL 19.3(6) COL 13.5(6)
11. In the case of loss of failed SG isolation function in SGTR event, with SG pressure indication after above operation, operators open main steam depressurization valve of intact SG loop in order to promote SG heat removal and to depressurize RCS and move to cool down and recirculation operation.	19.2.5 COL 19.3(6) COL 13.5(6)

Table 19.1-119 Key Insights and Assumptions (Sheet 22 of 50)

Key Insights and Assumptions	Dispositions
12. In the case of loss of secondary side cooling function by emergency feedwater system in transient events including turbine trip, load loss event etc., with emergency feedwater pump flow rate, operators start to recover main feedwater system in order to maintain secondary side cooling.	19.2.5 COL 19.3(6) COL 13.5(6)
13. In the case of loss of SI injection function entirely in LOCA event, with SI flow rate and RCS temperature indication, operators provide secondary side cooling to reduce RCS pressure and temperature by opening the main steam depressurization valves manually and supplying water from the emergency feedwater system in order to enable low pressure injection with containment spray system / residual heat removal system.	19.2.5 COL 19.3(6) COL 13.5(6)
14. In the case of loss of containment spray system function, alternate containment cooling operation is implemented utilizing CV natural recirculation in order to remove heat from CV. This preparation contains CCW pressurization with N2 gas, disconnection heat load of non-safety chiller and CRDM etc. and connection to containment fan cooler units. This operation is implemented when the containment pressure reaches the design pressure.	19.2.5 COL 19.3(6) COL 13.5(6)
15. In the case of leakage of the RWSP water from HHIS piping, CSS/RHRS piping or refueling water storage system piping, with drain sump water level – abnormally high, operators close the RWSP suction isolation valves respectively in order to prevent leakage of RWSP water from failed piping.	19.2.5 COL 19.3(6) COL 13.5(6)
16. When the containment isolation signal fail to automatically actuate, with CV pressure abnormally high signal, operators manually actuate the containment isolation signal in order to remove heat from the containment vessel.	19.2.5 COL 19.3(6) COL 13.5(6)
17. RCS is depressurized through operating the depressurization valve after onset of core damage and before reactor vessel breach. This operation prevents events due to high pressure melt ejection.	19.2.5 COL 19.3(6) COL 13.5(5)
18. Operation of firewater injection to reactor cavity is implemented to flood reactor cavity in case of containment spray system failure, after onset of core damage and before reactor vessel breach.	19.2.5 COL 19.3(6) COL 13.5(6)

Table 19.1-119 Key Insights and Assumptions (Sheet 23 of 50)

Key Insights and Assumptions	Dispositions
19. When the running charging pump is unavailable, operators start the standby charging pump.	19.2.5 COL 13.5(6) COL 19.3(6)
20. Operators manually start SI pumps by DAS by detection of DAS alarm in the software CCF for recovery of the automatic injection using SI pump.	19.2.5 COL 13.5(6) COL 19.3(6)
21. Operators manually open SDVs by DAS by detection of DAS alarm in the software CCF for RCS depressurization.	19.2.5 COL 13.5(6) COL 19.3(6)
22. When reactor trip fails (i.e., ATWS event), operators initiate boric acid transfer to maintain the adequate boron concentration in the RCS using CVCS. This operator action is risk important. Activities to minimizes the likelihood of human error in the human factors engineering is important in developing procedures, training and other human reliability related programs.	18.6 19.2.5 COL 13.5(6) COL 19.3(6)
23. When containment pressure is abnormally high due to failure of automatic containment spray actuation, operators manually actuate containment spray by opening containment spray isolation valve and CS/RHR heat exchanger cooling line valves and starting CS/RHR pumps.	19.2.5 COL 13.5(6) COL 19.3(6)
24. When incoming breakers fail to automatically open in the loss of offsite power case, operators manually open the breakers to isolate Class 1E 6.9kV ac switchgears from the faulted offsite power.	19.2.5 COL 13.5(6) COL 19.3(6)
25. After onset of core damage prior to reactor vessel breach, operators open the depressurization valves for RCS depressurization in order to prevent the breach caused by high pressure meld ejection.	19.2.5 COL 13.5(6) COL 19.3(6)
26. Operation of fire injection to reactor cavity is implemented to flood reactor cavity in case of containment spray system failure, after onset of core damage and before reactor vessel breach.	19.2.5 COL 13.5(6) COL 19.3(6)
27. Operators calibrate the EFW pit water level sensor, which is applied to changeover water source of EFW pump or to supply demineralized water to the EFW pit.	19.2.5 COL 13.5(6) COL 19.3(6)
28. Operators calibrate CCW surge tank pressure sensor which is used to pressurize CCWS for alternate containment cooling.	19.2.5 COL 13.5(6) COL 19.3(6)

Table 19.1-119 Key Insights and Assumptions (Sheet 24 of 50)

Key Insights and Assumptions	Dispositions
29. Operators calibrate containment pressure sensors used for ESF actuation signals (safety) and for alternate containment cooling (non-safety).	19.2.5 COL 13.5(6) COL 19.3(6)
30. Action to open Unlocked motor-operated valve is performed in series through the communication between operators in electrical room and in main control room.	18.6
31. MCR crew members consists of the following team members at all times during the evolution of an accident scenario: - Reactor operator (RO) - Senior reactor operator (SR) - Shift technical advisor (STA) The RO operates the plant during normal and abnormal situations, and SRO and STA check the action of the RO. If the RO commits an error during the operation, SRO or STA would correct the circumstances. However, when there is not enough available time to take corrective action, recovery credit is not considered.	19.2.5 COL 13.5(5) COL 13.5(6) COL 19.3(6)
32. For operator actions at local area (action that takes place outside control room) auxiliary operators (licnsed and non-licensed) are available: - Auxiliary operator 1 - Auxiliary operator 2 Normally the auxiliary operators are stational in the MCR. If the local manipulation of equipment is required to mitigate accidents or to prevent core damage, the auxiliary operator moves to the appropriate area in the reactor building or auxiliary building, to access equipment such as manual valves. It is assumed that auxiliary operator 1 operates equipment and auxiliary operator 2 checks the actions of auxiliary operator 1. If auxiliary operator 1 commits an error during the operation, auxiliary operator 2 corrects it.	19.2.5 COL 13.5(5) COL 13.5(6) COL 19.3(6)
33. Misalignment of remote-operated valves (e.g. motor-operated valves, air-operated valves), pumps and gas turbine generators after test and maintenance will be fixed before initiating events occur. Remote-operated valve open/close positions and control switch positions are monitored in the main control room, so they will be detected in a short time	19.2.5 COL 13.5(5) COL 13.5(6) COL 19.3(6)
34. The controls and displays available in the US-APWR control room are superior to conventional control room HSIs and, therefore, human error probabilities in the US-APWR operation would be less than those in conventional plants.	19.2.5 COL 13.5(5) COL 13.5(6) COL 19.3(6)

Table 19.1-119 Key Insights and Assumptions (Sheet 25 of 50)

Key Insights and Assumptions	Dispositions
35. Misalignment of remote-operated valves (e.g. motor-operated valves, air-operated valves), pumps and gas turbine generators after test and maintenance will be fixed before initiating events occur. Remote-operated valve open/close positions and control switch positions are monitored in the main control room, so they will be detected in a short time.	19.1.4 19.1.5 COL 13.5(5) COL 13.5(6)
36. The controls and displays available in the US-APWR control room are superior to conventional control room HSIs and, therefore, human error probabilities in the US-APWR operation would be less than those in conventional plants.	Chapter 18 19.1
37. In the SGTR event, operators perform at least one action to equalize primary and secondary pressure after the ruptured SG isolation. - Open safety depressurization valves - Start pressurizer auxiliary spray - Open depressurization valves for severe accident - Actuate pressurizer spray by restarting RCPs	19.2.5 COL 13.5(6) COL 19.3(6)

Table 19.1-119 Key Insights and Assumptions (Sheet 26 of 50)

Key Insights and Assumptions	Dispositions
Operator actions (LPSD)	
1. Operator actions modeled in the PRA are based on symptom oriented procedures. Risk significant operator actions identified in the PRA will be addressed in plant operating procedures including AOP, EOP, etc.	19.2.5 COL 13.5(7) COL 19.3(6)
2. Maintenance procedures indicate to check valve positions from the main control room after outages or testing. Valves that have been aligned in the wrong position will be detected and fixed to the correct position within a short period of time.	19.2.5 COL 13.5(7) COL 19.3(6)
3. In the operational visual display unit (VDU) of US-APWR, the layout of controllers & monitoring alignment in each window are different and this feature would make the operator perceive them as different locations.	18.4 19.2.5 COL 13.5(7) COL 19.3(6)
4. When the RCS is at atmospheric pressure, gravity injection from SFP is effective. Operator will perform the gravity injection by opening the injection flow path from SFP to RCS cold legs, and supplying water from RWSP to SFP.	19.2.5 COL 19.3(6) COL 13.5(7) 5.4.7.2.3.6
5. When station blackout occurs, operators connect the alternative ac power with alternate gas turbines to Class 1E bus in order to recover emergency ac power. This operator action is risk important. Activities to minimizes the likelihood of human error in the human factors engineering is important in developing procedures, training and other human reliability related programs.	18.6 19.2.5 COL 19.3(6) COL 13.5(7)
6. In the case of loss of CCW/ESW, operators connect the fire suppression system to the CCWS and start the fire suppression pump in order to cool the charging pump and maintain injection to RCS. This operator action is risk important. Activities to minimizes the likelihood of human error in the human factors engineering is important in developing procedures, training and other human reliability related programs.	18.6 19.2.5 COL 19.3(6) COL 13.5(7)
7. In the case of loss of decay heat removal functions by RHRS and SGs operators start the charging pump in order to recover water level in the RCS. If water level in the RWSAT, which is the water source of charging pumps, indicates low level the operator will supply RWSP water to the RWSAT by the refueling water recirculation pump. This operator action is risk important. Activities to minimizes the likelihood of human error in the human factors engineering is important in developing procedures, training and other human reliability related programs.	18.6 19.2.5 COL 19.3(6) COL 13.5(7)

Table 19.1-119 Key Insights and Assumptions (Sheet 27 of 50)

Key Insights and Assumptions	Dispositions
8. In case LOCA occurs in RHR line, operator will perform isolation of the RHR hot legs suction isolation valves and stop leakage of RCS coolant from RHRS where LOCA occurs.	19.2.5 COL 19.3(6) COL 13.5(7)
9. In case the RCS water level decreases during mid-loop operation and the failure of automatic isolation valve occurs, operator will perform the manual isolation of low-pressure letdown line.	19.2.5 COL 19.3(6) COL 13.5(7)
10. When over-draining occurs and the automatic isolation valve fails, with RCS water level – low, operators close the valve on the letdown line in order to stop draining.	19.2.5 COL 19.3(6) COL 13.5(7)
11. In the case of loss of decay heat removal functions by RHRS and SGs, operators start the safety injection pump in order to maintain RCS water level. This operator action is risk important. Activities to minimizes the likelihood of human error in the human factors engineering is important in developing procedures, training and other human reliability related programs.	18.6 19.2.5 COL 19.3(6) COL 13.5(7)
12. In the case of failure of running RHRS, with RHR flow rate – low, operators open the valves on the standby RHR suction line and discharge line and start the standby RHR pump in order to maintain RHR operating.	19.2.5 COL 19.3(6) COL 13.5(7)
13. In the case of leakage of the RWSP water from HHIS piping, CSS/RHR piping or refueling water storage system piping, with drain sump water level – abnormally high, operators close the RWSP suction isolation valves respectively in order to prevent leakage of RWSP water from failed piping.	19.2.5 COL 19.3(6) COL 13.5(7)
14. In the case of failure of running CCWS, with CCW flow rate – low, operators start the standby CCW pump in order to maintain CCWS operating.	19.2.5 COL 19.3(6) COL 13.5(5) COL 13.5(7)
15. When ESW strainer plugs up, with ESW pump pressure – normal, ESW flow rate – low and differential pressure – significant, operators switch from plugged strainer to standby strainer in order to maintain ESWS operating.	19.2.5 COL 19.3(6) COL 13.5(5)
16. In the case of loss of decay heat removal functions from RHR, with RCS temperature – high or RCS water level – low, operators feed water to SGs by motor-driven EFW pump, open main steam depressurization valve and close the pressurizer spray vent valve (if the valve is opened) in order to remove decay heat from RCS.	19.2.5 COL 19.3(6) COL 13.5(7)
17. In the case of failure of feed or steam line associated with available motor-driven EFW pump during secondary side cooling, operators open the EFW tie-line valves in order to feed water to multiple SGs.	19.2.5 COL 19.3(6) COL 13.5(7)

Table 19.1-119 Key Insights and Assumptions (Sheet 28 of 50)

Key Insights and Assumptions	Dispositions
18. When incoming breakers fail to automatically open in the loss of offsite power case, operators manually open the breakers to isolate Class 1E 6.9kV ac switchgears from the faulted offsite power	19.2.5 COL 13.5(7) COL 19.3(6)
19. When running CS/RHR pumps are tripped due to loss of offsite power, operators restart the CS/RHR pumps to maintain the RHR operation.	19.2.5 COL 13.5(7) COL 19.3(6)
20. Operators manually start charging pump and safety injection pump as a local action when the software CCF occurs.	19.2.5 COL 13.5(7) COL 19.3(6)
21. Action to open Unlocked motor-operated valve is performed in series through the communication between operators in electrical room and in main control room.	18.6
22. In the event of decreasing RCS water level, operator actions to trip the CS/RHR pumps before cavitation and to restart the pumps after water level is restored will improve the reliability of RHR recovery. This operator action is important to reduce risk during shutdown.	5.4.7.2.3.6 COL 13.5(7)
23. In the event of decreasing RCS water level, operators trip CS/RHR pumps before pump cavitation occurrence. After recover the water level, operators restart the pump. The action to restart the pump has high reliability, which reduces the risk during shutdown operation.	5.4.7.2.3.6 COL 13.5(7)
24. MCR crew members consists of the following team members at all times during the evolution of an accident scenario: - Reactor operator (RO) - Senior reactor operator (SR) - Shift technical advisor (STA) The RO operates the plant during normal and abnormal situations, and SRO and STA check the action of the RO. If the RO commits an error during the operation, SRO or STA would correct the circumstances. However, when there is not enough available time to take corrective action, recovery credit is not considered.	19.2.5 COL 13.5(7) COL 19.3(6)

Table 19.1-119 Key Insights and Assumptions (Sheet 29 of 50)

Key Insights and Assumptions	Dispositions
25. For operator actions at local area (action that takes place outside control room) auxiliary operators (licnsed and non-licensed) are available: - Auxiliary operator 1 - Auxiliary operator 2 Normally the auxiliary operators are stational in the MCR. If the local manipulation of equipment is required to mitigate accidents or to prevent core damage, the auxiliary operator moves to the appropriate area in the reactor building or auxiliary building, to access equipment such as manual valves. It is assumed that auxiliary operator 1 operates equipment and auxiliary operator 2 checks the actions of auxiliary operator 1. If auxiliary operator 1 commits an error during the operation, auxiliary operator 2 corrects it.	19.2.5 COL 13.5(7) COL 19.3(6)
26. Misalignment of remote-operated valves (e.g. motor-operated valves, air-operated valves), pumps and gas turbine generators after test and maintenance will be fixed before initiating events occur. Remote-operated valve open/close positions and control switch positions are monitored in the main control room, so they will be detected in a short time.	19.1.6 COL 13.5(5) COL 13.5(7)
27. The controls and displays available in the US-APWR control room are superior to conventional control room HSIs and, therefore, human error probabilities in the US-APWR operation would be less than those in conventional plants.	Chapter 18 19.1

Table 19.1-119 Key Insights and Assumptions (Sheet 30 of 50)

Key Insights and Assumptions	Dispositions
Operator actions (Severe Accidents)	
1. Operators manually initiate severe accident mitigation systems in accordance with the instructions from the technical support centre staff.	19.2.5 COL 13.5(7) COL 19.3(6)
2. In the loss of support system sequences, operators will attempt to recover CCW/ESW or ac power while suppressing containment overpressure with firewater injection into spray header.	19.2.5 COL 13.5(7) COL 19.3(6)

Table 19.1-119 Key Insights and Assumptions (Sheet 31 of 50)

Key Insights and Assumptions	Dispositions
LPSD assumptions	
1. Freeze plug may not be used for US-APWR because the isolation valves are installed considering maintenance and CCWS has been separated individual trains. Therefore, the freeze plug failure is excluded from the potential initiator.	COL 13.5(7)
2. Redundant narrow range water level instrument and a mid-range water level instrument are provided to measure mid-loop water level. Installation of a redundant water narrow level instrument enhances reliability of the mid-loop operation. A temporary mid-loop water level sensor that measures the RCS water level with reference to pressure at the reactor vessel head vent line and cross over leg is installed in addition to these permanent water level sensors to cope with surge line flooding events.	5.4.7.2.3.6 Figure 5.1-2
3. When the RCS is mid-loop operation with the closed state, the reflux cooling with the SGs is effective.	19.1.6 19.2.5 COL 19.3(6) COL 13.5(6)
4. Various temporary equipment will be possible in the containment during LPSD operation for maintenance. However, it is unlikely that these materials reach the RWSP because debris interceptors are installed over the SG compartment floor openings and within the header compartment (see Chapter 6, Subsection 6.2.2). Therefore, potential plugging of the suction strainers due to debris is excluded from the PRA modeling.	6.2.2

Table 19.1-119 Key Insights and Assumptions (Sheet 32 of 50)

Key Insights and Assumptions	Dispositions
5. Low-pressure letdown line isolation valves are installed. One normally closed air-operated valve is installed in each of two low-pressure letdown lines that are connected to two of four RHR trains. During normal plant cooldown operation, these valves are opened to divert part of the normal RCS flow to the CVCS for purification and the RCS inventory control. These valves are automatically closed and the CVCS is isolated from the RHRS by the RCS loop low-level signal to prevent loss of RCS inventory at mid-loop operation during plant shutdown. There are no features that automate the response to loss of RHR.	5.4.7.2.2.3 5.4.7.2.3.6 7.6.1.7 19.2.5 COL 13.5(7) COL 19.3(6) TS 3.4.8 TS 3.9.6
6. The time when loss of RHR occur were set to be 12 hours after plant trip, which is the time POS 4 (mid-loop operation) is entered after plant trip, since this condition gives the most severe condition for mid-loop operation from a decay heat perspective. The pressurizer spray-line vent line with 3/4 inch diameter is assumed to be open at the initial condition. One hour after loss of RHR function, the operator is assumed to perform the following actions: - Close pressurizer spray line vent, - Start emergency feed water (EFW) pump, and - Open main steam depressurization valve. POS 8 (mid-loop operation) assumes vacuum venting equipment vents air from the RCS through the SDVs. After loss of RHR, the operator is assumed to perform the following actions. - Close valves installed in line to vacuum venting equipment such as SDVs - Start EFW pump, and - Open main steam depressurization valve.	19.2.5 COL 19.3(6) COL 13.5(7)
7. Nitrogen will not be injected in the SG tubes to speed draining in the US-APWR design. The SG tubes will be filled with air during midloop operation.	19.2.5 COL 19.3(6) COL 13.5(7)
8. Operator actions assumed in the PRA will be considered in the shutdown response guideline, which will be developed satisfying NUMRAC 91-06 and following other recent guidelines such as INPO 06-008.	19.2.5 COL 19.3(6) COL 13.5(7)
9. Cleanliness, housekeeping and foreign material exclusion areas are administrative controls and programs to be developed by any applicant referencing the certified US-APWR design for construction and operation	6.2 Table 6.2.2-2 19.2.5 COL 19.3(6) COL 13.5(7)

Table 19.1-119 Key Insights and Assumptions (Sheet 33 of 50)

Key Insights and Assumptions	Dispositions
10. The reactivity insertion event due to boron dilution has been judged to be insignificant to risk because of the following factors: - Strict administrative controls are in place to prevent boron dilution - Boron dilution events are highly recoverable - The CVCS design inherently limits te maximum boron duration rate. - The consequences of re-criticality are minor unless they continue for very long.	15.4.6.2 19.2.5 COL 19.3(6) COL 13.5(7)
11. Administrative controls ensure the RCS water level, temperature and pressure indication are available during shutdown.	19.2.5 COL 19.3(6) COL 13.5(7)
12. Either at least three pressurizer safety valves or the pressurizer manway is removed to prevent potential damage of the SG nozzle dams and loss of RCS inventory caused by loss of RHR function and subsequent pressurization while SG nozzle dams and reactor vessel head are in place.	5.4.7.2.3.6
13. Maintenance rule process is implemented to evaluate the risk of configurations being entered during shutdown. These practices assure that removing a number of related systems from service at the same time is carefully considered and virtually never done when the conditional risk impacts are high.	COL 17.6(1)
14. The SG nozzle dam installation level for the US-APWR is higher than in most conventional operating plants. The installation and removal of SG nozzle dams are done when the RCS water level is above the top of the main coolant piping (MCP).	5.4.7.2.3.6
15. The de-tensioning and tensioning of RV head stud bolts are performed at an RCS water level between the flange and the top of the MCP.	5.4.7.2.3.6
16. The installation and removal of the in-core instrumentation system (ICIS) is not done at mid-loop operation but is done when the RCS water level is above the top of the MCP.	5.4.7.2.3.6
17. Loss of SFP cooling is also progress the phenomena and has sufficient time to recovery because of large coolant inventory in the pool.	

Table 19.1-119 Key Insights and Assumptions (Sheet 34 of 50)

Key Insights and Assumptions	Dispositions
18. Surge line flooding may occur if decay heat removal function is lost during plant operating states where the pressurizer manway is the only vapor release pass from the RCS. Water held up in the pressurizer can erroneous readings of water level indicators measured with reference to the pressurizer. This phenomenon can also prevent gravity injection from the SFP. Measures to prevent accident evolution caused by surge line flooding are important. Adoption of both measures listed below can reduce risk from surge line flooding event. - Installation of an temporary RCP water level sensor that measure the MCP water level with reference to pressure at the reactor vessel head vent line and cross over leg when the RCS is vented at a high elevation. - Operational procedures to perform continuous RCS injections when loss of RHR occurs under conditions where the pressurizer manway is the only vapor release pass from the RCS. The temporary water level will satisfy the following specifications. - Water level can be read outside the containment vessel (CV) in order to be effective during events which involve harsh environment in the CV - Tygon tubing monometer will not be used - Instrumentation piping diameter will be sufficient enough to prevent delay in response	5.4.7.2.3.6 19.2.5 COL 19.3(6) COL 13.5(7)
19. Two types of instruments are provided in US-APWR design to measure the temperature representative of the core exit whenever the reactor vessel head is located on top of the reactor vessel. The first one is core exit thermocouples located inside the RV. The second is resistance temperature detectors in the reactor coolant hot leg. These two independent instruments will be available whenever the RCS is in a mid-loop condition and the reactor vessel head is located on top of the reactor vessel.	5.4.7.2.3.6
20. Technical Specification controls to ensure the OPERABILITY of a train of the SIS and associated water source (i.e., RWSP and refueling cavity) as an RCS makeup function during cold shutdown in reduced inventory conditions and during refueling with water level <23 ft above the top of reactor vessel flange.	TS 3.4.8, TS 3.9.6
21. Operating procedural controls to ensure the availability of the refueling cavity level instrument and alarm while the refueling cavity is flooded.	COL 13.5(5)
22. Operating procedural controls to ensure the availability of at least one safety-related pump, e.g., a CS/RHR pump, to provide makeup to the refueling cavity when the cavity is flooded.	COL 13.5(5)

Table 19.1-119 Key Insights and Assumptions (Sheet 35 of 50)

Key Insights and Assumptions	Dispositions
23. Administrative controls to ensure that the availability of equipment necessary to achieve containment isolation, specifically, the equipment hatch hoist, lifting rig, and AACs while the containment remains open.	COL 13.5(7)
24. All containment penetrations are closed immediately after a loss of all RHR trains.	COL 13.5(7)

Table 19.1-119 Key Insights and Assumptions (Sheet 36 of 50)

Key Insights and Assumptions	Dispositions
Expeditious actions outlined in GL 88-17 The following actions described as expeditious actions in Generic Letter 88-17 (Reference 19.1-54) are important to plant safety and should be implemented prior to operating in a reduced inventory condition. The expeditious actions applicable to the US-APWR design are the followings:	
1. Discuss the Diablo Canyon event, related events, lessons learned, and implications with appropriate plant personnel. Provide training shortly before entering a reduced inventory condition.	COL 13.5(7)
2. Implement procedures and administration controls that reasonably assure that containment closure will be achieved prior to the time at which a core uncover could result from a loss of decay heat removal coupled with an inability to initiate alternate cooling or addition of water to the RCS inventory. These procedures and administrative controls should be active and in use prior to entering a reduced RCS inventory condition. Procedures should reflect that the containment is capable of being closed prior to reaching 200 °F in the RCS.	COL 13.5(7)
3. Provide at least two independent, continuous temperature indications that are representative of the core exit conditions whenever the RCS is in a mid-loop condition and the reactor vessel head is located on top of the reactor vessel.	COL 13.5(7)
Two types of instruments provided in the US-APWR design to measure RV temperature are core exit thermocouples located inside the RV and the resistance temperature detectors in the reactor coolant hot leg.	7.5.1.1.3.1 7.5.1.1.3.3
4. Provide at least two independent, continuous RCS water level indications whenever the RCS is in a reduced inventory condition.	COL 13.5(7)
Redundant narrow range level instruments are provided to meet this requirement.	5.4.7.2.3.6
5. Implement procedures and administrative controls that generally avoid operations that deliberately or knowingly lead to perturbations to the RCS and/or to systems that are necessary to maintain the RCS in a stable and controlled condition while the RCS is in a reduced inventory condition.	COL 13.5(7)
6. Provide at least two available or operable means of adding inventory to the RCS that are in addition to pumps that are a part of the normal DHR systems.	COL 13.5(7)
Means of adding inventory to the RCS in the US-APWR design can be safety injection pumps, charging pump and gravity injection from the SFP.	6.3.2.1.1 5.4.7.2.3.6 9.3.4.2.6.1

Table 19.1-119 Key Insights and Assumptions (Sheet 37 of 50)

Key Insights and Assumptions	Dispositions
7. Implement procedures and administrative controls that reasonably assure that all hot legs are not blocked simultaneously by nozzle dams unless a vent path is provided that is large enough to prevent pressurization of the upper plenum of the RV. As noted in GL 88-17 (Reference 19.1-54), there is a possibility of rapid loss of RCS inventory by ejection of water through the cold leg SG manways in the event of a loss of RHR and subsequent RCS pressurization. To minimize this potential, an RCS vent path is required in accordance with GL 88-17. Whenever a cold leg opening is made without the associated cold leg nozzle dam installed, a hot leg SG manway and its associated nozzle dam will be kept open to provide an adequate vent path. Consistent with guidance provided in IN 88-36 (Reference 19.1-55), a hot leg SG manway will be the first manway opened and a hot leg nozzle dam will be the last dam to be installed.	5.4.7.2.3.6 COL 13.5(7)
8. Plant personnel calculate a plant-specific time to reach 200 °F in the RCS and time to hatch closure in order to determine if the hatch is "capable of being closed" prior to reaching harsh environment in containment in the event of loss of RHR.	COL 13.5(7)

Table 19.1-119 Key Insights and Assumptions (Sheet 38 of 50)

Key Insights and Assumptions	Dispositions
Seismic insights	
1. Table 19.1-54 provides the list of HCLPFs for US-APWR SSCs. This table demonstrates that the SSC HCLPF values are greater than 1.67 times the design basis SSE although the assessment performed by conservative generic data from EPRI URD.	19.1.5.1 Table 19.1-54
This insight will be certified by the following assessment. - Perform seismic margin assessment using US-APWR plant specific in-structure response and stress analyses. - Conduct plant walkdown to certify the SSCs retain seismic margin under as-built conditions prior to fuel loading.	3.7

Table 19.1-119 Key Insights and Assumptions (Sheet 39 of 50)

Key Insights and Assumptions	Dispositions
Seismic assumptions	
1. Failure of the RHRS isolation valves is not included in the analysis, because the pipe sections are assumed to fail before the valves fail and these valves are normally closed. Also, the US-APWR design has provided further protection against interfacing system LOCA by upgrading design pressure. Therefore, interfacing system LOCA is not modeled.	5.4.7.1
2. Failure of buildings that are not Seismic Category I (i.e., turbine building, auxiliary building and access building) does not impact SSCs designed to be Seismic Category I. Seismic spatial interactions between SSCs design to be Seismic Category I and any other buildings will be avoided by proper equipment layout and design. The following Seismic Category I buildings and structures are identified as buildings and structures that involve safety-related SSCs to prevent core damage. - Reactor building - Safety power source buildings - Essential service water intake structure - Essential service water pipe tunnel	3.2.1
3. Relay chatter does not occur or does not affect safety functions during and after seismic event.	3.10 Table 19.1-54
4. Seismic margin for AAC is much higher than that of the offsite power system.	19.1.5.1.2

Table 19.1-119 Key Insights and Assumptions (Sheet 40 of 50)

Key Insights and Assumptions	Dispositions
Internal fire design features and insights	
1. The US-APWR has four divisions of safety systems and a physical fire barrier separates each division to prevent a total loss of safety systems against the fire. As a result of the fire PRA, it has been confirmed that functions of the safety system for plant safe shutdown will be ensured in the event of any postulated fire.	9.5.1
2. Turbine building electric rooms are segregated into two groups by a partition that can limit the propagation of fire for a minimum of 1-hour. This feature is possible to prevent loss of offsite power caused by a fire in one T/B electrical room spreading to the second T/B electrical room.	9.5.1
3. In case of LOCA or loss of RHR caused by over drain or failure of water level maintain by a fire during LPSD, the flow pathway could be isolated by automatic closing of the low pressure letdown line isolation valve.	5.4.7.2.2.3
4. The following design features of the US-APWR will contribute to reduce the risk of MCR fire. - The Class 1E I&C system of the US-APWR is digital; therefore, fire damage of Visual Display Units due to a MCR fire would not cause spurious operation of equipment. - The possibility of spurious operation of components due to fire in the operator console (OC) is very low because OPT/CAX cables are used between Safety VDUs and the ESF actuation system in the OC. This reduces the fire risk in the MCR. - The automatic start-up circuits of Engineered Safety Features (ESF) necessary for plant safe shutdown are installed in safety I&C rooms. Even though a MCR fire might damage the equipment installed in the MCR, ESF equipment could be started automatically by a start-up signal (e.g., ECCS actuation signal) whose circuits will pass through the safety I&C room but not the MCR. - The MCR and four divisions of the safety I&C rooms are separated individually by a physical fire barrier. Therefore, the fire in the MCR will not propagate to multiple Class 1E I&C rooms simultaneously even though there could be a single failure on the physical separation barrier of those rooms. - The US-APWR is designed to have a RSC (Remote Shutdown Console) as a backup system to the MCR. It is possible to shutdown the reactor from the RSC in the event that a severe MCR fire forces the operator to evacuate the MCR.	9.5.1
5. It is important to provide an oil collection system for the RCP motor in order to prevent a fire from occurring. Even if fire could occur on the oil pan of the oil collection system, the effects of fire to the adjoining oil pan area would be negligible because the leaked oil in the oil-pan is collected into a closed tank.	9.5.1

Table 19.1-119 Key Insights and Assumptions (Sheet 41 of 50)

Key Insights and Assumptions	Dispositions
6. The T/B electrical rooms are separated from the T/B by a partition that can limit the propogation of a fire for a minimum of 1-hour. This feature can reduce the possibility of a loss of offsite power caused by a fire in the T/B spreading to the T/B electrical rooms.	9A.3.143
7. The reserve auxiliary transformers (RATs) are separated from each other and from the main transformer (MT) and the unit auxiliary transformers (UATs) by a minimum of 1-hour rated fire barriers or a minimum distance of 30 ft.	Table 9.5.1-2

Table 19.1-119 Key Insights and Assumptions (Sheet 42 of 50)

Key Insights and Assumptions	Dispositions
Internal fire assumption	
1. All fire doors serving as fire barriers between redundant safety train fire compartments are normally closed.	9.5.1.2.1 COL 9.5(1)
2. For transient combustibles, “three Airline trash bags” has been assumed in each fire compartment.	9.5.1.2.1 COL 9.5(1)
3. Transient combustibles with total heat release capacity of 93,000 Btu (obtained from NUREG/CR-6850, “AppendixG-table-7LBL-Von Volkinburg, Rubbish Bag” Test results) is assumed for Fire ignition source within Containment Vessel.	9.5.1.2.1 COL 9.5(1)
4. The Heat Release Rate of various items as specified in Chapter-11 of NUREG/CR-6850 is used.	9.5.1.2.1 COL 9.5(1)
5. Damage temperature of thermoplastic cables as shown in Appendix-H of NUREG/CR-6850 is used as the target damage temperature.	9.5.1.2.1 COL 9.5(1)
6. Human error probabilities of post-fire operator actions are assumed as follows.	9.5.1.2.1 COL 9.5(1)
- No credit has been taken for the operator actions of any equipment in the fire compartment affected by fire.	
- The Fire Brigade is provided to meet the requirements of Regulatory Guide 1.189. Higher stress levels of human actions post-fire are not assumed.	
- The HEP for operations at the remote shutdown console is assumed as 0.1.	
7. One of RCS letdown isolation valves and one of RCS vent line isolation valves are locked close by administrative controls	COL 13.5(1) COL 13.5(7)

Table 19.1-119 Key Insights and Assumptions (Sheet 43 of 50)

Key Insights and Assumptions	Dispositions
8. Stress levels following post-fire safe shutdown do not become higher following a fire for the following reasons: - The communication system will remain active during a fire due to the redundant nature of the plant communication systems which are installed with a minimum of two verbal communication paths between all plant locations. - The lighting system will remain operable during a fire because the emergency lighting system has a redundant power source for each fire area. - Heat and smoke propagation to adjacent fire compartments are assumed to be extremely low due to the installation of the fire dampers installed in series within each HVAC duct passing through the fire compartment, therefore it is reasonable to ignore the stress increase due to their heat and smoke inhalation.	9.5.2 9.5.3 COL 9.5(1)
9. It has been assumed that a “Challenging fire” for MCR shown in Table C-4 of appendix C of NUREG/CR-6850 causes an adverse operational environment in the MCR. Therefore, it has been assumed that a MCR “Challenging fire” may force the operators to abandon MCR and evacuate to the RSC room.	9A.2.7.2 COL 9.5(1)

Table 19.1-119 Key Insights and Assumptions (Sheet 44 of 50)

Key Insights and Assumptions	Dispositions
Internal fire risk insights	
1. Fire compartments of the US-APWR significant to fire risk of CDF are the Yard, turbine building (T/B) other floor, and FA6-101-04 zone. A Yard fire is also the dominant scenario to fire risk of LRF. A fire in the fire compartment "Yard" and a fire in the T/B fire compartment have the potential to cause loss of offsite power (LOOP). Additionally, simultaneous occurrence of the failures of all Class 1E gas turbine generators start-up and the operator actions to switchover a Class 1E bus to an alternate alternating current (AAC) power sources will lead to a station blackout. In these cases, conditional core damage probability (CCDPs) of these fire scenarios are higher than those of other fire scenarios, and this is the reason why the fires of these fire compartments have become the dominant fire scenarios to CD. T/B contains a large amount of combustible materials compared with other fire compartments, and therefore, the fire frequency of this fire compartment is high. This is the reason why the CDF of this fire compartment is higher than the other fire scenarios, though no mitigation system is damaged in this fire scenario.	19.1.5.2.2
2. The dominant fire-induced initiating events are LOOP and SLBO. In order to cope with these initiating events, the EFWS (Emergency Feed-Water System) is required to cool down the RCS in order to prevent CD. When EFWS is not available, the actuation of the safety dpressurization valve (SDV) is required in order to bleed the inventory of the RCS. Therefore, the functions of the EFWS and the Pressurizer control system are significant against fire risk.	19.1.5.2.2
3. In this analysis, no credit has been given to any fire suppression system of the fire compartments. The CDF of those fire compartments is sufficiently low. The credit to the Yard fire suppression system has not been given because the detailed information about the feature of the suppression system has not been established at the DC phase.	19.1.5.2.2
4. Every fire compartment except for the fire compartments in the containment vessel and in the Yard is composed of a fire resistant wall, floor, and ceiling; therefore, all four ESF trains are segregated individually. The fire PRA identified that there is no significant multiple compartments fire scenario to fire risk in the US-APWR and that the fire risk of the multiple compartments fire scenario between the MCR and the Class 1E I&C rooms is not significant. In addition, a fire in any fire compartment in the containment vessel will not spread to adjacent fire compartments by the CFAST simulation.	19.1.5.2.2

Table 19.1-119 Key Insights and Assumptions (Sheet 45 of 50)

Key Insights and Assumptions	Dispositions
5. Significant operator actions of the post fire accident derived from the importance analysis are as follows: - The operator action of connecting a Class 1E bus to the AAC in case of a start-up failure of all four Class 1E gas turbine generators. This operator action is important because this action is necessary to cope with a station blackout resulting from LOOP events, which is the dominant fire-inducing initiating event. - The operator action of the "feed and bleed operation".	19.1.5.2.2
6. The design associated with the control transfer from the operator console (OC) in the main control room (MCR) to the remote shutdown console (RSC) in the remote shutdown room (RSR) if the MCR is uninhabitable for any reason, including fire, is an important risk insight. The control and monitoring of normal and safe shutdown functions can be performed from the RSC, which is located outside the MCR in the reactor building.	7.4.1.5 9.5.1 19.1.5.2.2

Table 19.1-119 Key Insights and Assumptions (Sheet 46 of 50)

Key Insights and Assumptions	Dispositions
Internal flood design features and insights	
1. Four redundant safety systems are located in the reactor building (R/B). Each safety system is separated into four divisions by physical barriers to assure that the functions of the systems are maintained in the event of a postulated incident.	1.2.1.7.2.1
2. The R/B consists of a radiological controlled area (RCA) and a non-radiological controlled area (NRCA) separated physically by concrete barrier walls. These concrete barrier walls are designed to preclude flooding between the RCA and the NRCA. Piping, instrumentation, HVAC duct, conduit, and cable trays are installed through the flood barrier wall above the maximum flood level or are provided with water-tight seals.	3.4.1.3
3. All floors in the RCA of the R/B are divided into two areas, east and west, by concrete walls with water-tight doors. The equipment in the east area of the RCA is the A and B train SI pumps and the A and B train CS/RHR pumps with heat exchangers. The equipment in the west area are the C and D train SI pumps and the C and D train CS/RHR pumps with heat exchangers. The concrete walls and the water-tight doors prevent flood water migration from one safety train to another. The floor drains of the east area are connected and drain into the A-R/B sump tank, and the floor drains of the west area are connected and drain into the B-R/B sump tank. There is no cross-connection between the east area drains and the west area drains.	3.4.1.5.2.1
4. All floors in the NRCA of the R/B are divided into the two areas, east and west, by concrete walls with water-tight doors. The equipment on the east side includes two trains (A and B) of the CCW (HX and pump rooms), two trains (A and B) of the EFW (pump rooms), and the A and B train Class 1E electrical panels. The equipment on the west side includes two trains (C and D) of the CCW (HX and pump room), two trains (C and D) of the EFW (pump rooms) and the C and D train Class 1E electrical panels. The Class 1E electrical panel rooms are isolated from the corridor by concrete walls and water-tight doors. The floor drains of the east areas are connected and drain into the A-R/B non-radioactive sump, and the floor drains of the west areas are connected and drain into the B-R/B non-radioactive sump. There is no cross-connection between the east area drains and west area drains.	3.4.1.5.2.2
5. The T/B adjoins the NRCA of the R/B. The T/B is independent of the R/B to prevent internal hazards in the T/B from propagating to the R/B. Water-tight doors are installed in the doorways at ground level between the T/B and the R/B. In addition, a flood relief panel system is built into the T/B exterior walls. Actuation of the flood relief panels allows the flood water to drain out to the yard area to prevent it from affecting R/B equipment.	1.2.1.7.2.1 3.4.1.3

Table 19.1-119 Key Insights and Assumptions (Sheet 47 of 50)

Key Insights and Assumptions	Dispositions
Internal flood assumption	
1. Drain systems are designed to compensate with flood having flow rate below 100 gpm. Flood with flow rate below 100 gpm will not propagate to other areas due to the drain systems.	3.4.1.3
2. R/B is separated in two divisions (i.e. east area and west area). This design is prevents loss of all safety systems though postulated major floods that leak water over the capacities of flood mitigation systems. East side and west side of reactor building (R/B) are physically separated by flood propagation preventive equipment such as water tight doors. Therefore, flood propagation between east side and west side in the reactor building is not considered.	3.4.1.3 19.2.5 COL 19.3(6) COL 13.5(1) COL 13.5(7)
3. Watertight doors are provided for the boundaries between R/B and A/B in the bottom floor and between R/B and T/B in flood area 1F. This measure prevents flood propagation from non-safety building to R/B.	3.4.1.3
4. Flooding of ESW system can be isolated within 15 minutes. The leaking train can also be identified by low outlet flow from each CCW HX or decrease in the ESWS header pressure. The leaking ESWS trains are then isolated by shutting down the corresponding ESWS.	9.2.1.3
5. Four trains of ESW system have physical separation and flooding in one train does not propagate to other trains.	9.2.1.2.1 COL 9.2(3) COL 9.2(4)
6. The components that are environmentally qualified are considered impregnable to spraying or submerge effects. Also component failure by flooding will not result in the loss of an electrical bus.	
7. Penetrations within the boundaries between the restricted area and non-restricted area are sealed and doors or dikes are provided for openings. Therefore, flood propagation, except for major flood events is not considered.	3.4.1.3
8. A water leak in the break room that adjoins the MCR would be isolated immediately by the operators in the MCR.	19.5.3.1
9. Internal flooding PRA is developed based on internal events PRA models. However, operator actions in flooded areas are not assumed.	19.1.4.1
10. Operator actions to isolate or mitigate flood source are not assumed except the actions in the MCR and break room.	19.1.4.1

Table 19.1-119 Key Insights and Assumptions (Sheet 48 of 50)

Key Insights and Assumptions	Dispositions
11. The administrative controlled flood barriers that separated the reactor building between the east side and the west side are effective. The other water tight doors may be opened during maintenance.	19.2.5 COL 19.3(6) (RAI 19-50) COL 13.5(1) COL 13.5(7)
12. The outage states of mitigation systems are important for LPSD risk. From the insight of flooding risk, one train of mitigation system on each side in R/B should be available. So that assumed the available safety injection pumps trains A and C are available during POS 8-1. B and D pumps are assumed out of service.	19.2.5 COL 19.3(6) COL 13.5(7)

Table 19.1-119 Key Insights and Assumptions (Sheet 49 of 50)

Key Insights and Assumptions	Dispositions
Internal flood risk insights	
1. The most significant areas to internal flood risk are the second floor corridors of reactor building where EFW piping is located. The flooded water is assumed to propagate to other lower areas on the R/B east or west side and causes failures of both safety-related systems in either side. The steam generator blowdown water radiation monitor room (FA2-507-02) on the fourth floor, the turbine driven (T/D) emergency feedwater pump rooms on the B1 floor and corridors of the third floor and B1 floor in the reactor building are also risk significant areas. The internal flooding frequencies of these rooms are higher than other rooms because of the many water sources in the piping rooms and cause failures of both safety-related systems in either side.	19.1.5.3.2
2. The most significant system to internal flood risk is the emergency feedwater (EFW) system. The risk-significant cutsets of internal flooding are human errors to switch-over the EFW water sources. This is because the risk-significant flood scenarios might possibly affect the SSCs on either side of the R/B, and the failure of two EFW pumps of the affected side is assumed. In this scenario, switch-over of the EFW pit or the realignment of the EFW source to the intact side of the EFW lines is required. When detailed plant-specific information is available, there is determined to be sufficient time to perform these actions.	19.1.5.3.2
3. Significant systems to internal flooding frequencies are the following four systems, the emergency feedwater system (EFWS), main feedwater system (MFWS), main steam system (MSS) and circulating water system (CWS). These systems contain longer runs of piping in the R/B. For EFWS and MFWS, flood frequencies per piping lengths from EPRI 1013141 are relatively higher (on the order of 1E-6/yr-ft) than other systems. For CWS and MSS, the numbers of pipes and lengths of piping are relatively higher than for other systems in the R/B, though the flood frequency (on the order of 1E-7/yr-ft) is lower than that for the EFWS and MFWS.	19.1.5.3.2
4. Except for the flood source in the break room adjoining the main control room, the isolation of flood sources by operators is not considered in this assessment. All floors in the R/B are divided into two areas, east and west, by concrete walls and/or water-tight doors. This design mitigates the impact of flooding from one area to safety-related systems in other areas, impacting no more than two of the four trains.	19.1.5.3.2

Table 19.1-119 Key Insights and Assumptions (Sheet 50 of 50)

Key Insights and Assumptions	Dispositions
5. Except for the flood source in the break room adjoining the main control room, flood source isolation actions by operators is not expected in this assessment. The most significant operator action for internal flooding is switch-over of the EFW pit or the realignment of the EFW source to the intact side of the EFW lines. This case occurs when major flooding due to failure of two trains of the EFW system propagates into the R/B east side or west side.	19.1.5.3.2
6. The major contributors to the uncertainty associated with risk estimates are that available specific information--such as pipe routing, pipe lengths, and flooding isolation actions--are limited at the design certification phase. The risk assessment of US-APWR internal flooding is performed under some conservative assumptions as a bounding analysis. It is expected that the internal flooding risk will be reduced with the plant-specific detailed information.	19.1.5.3.2

Table 19.1-120 Initiating Events and Mitigation Systems during LPSD

Identifier	Initiating Event Description	Mitigation Systems							POS
		LO	MC	RH	SG	SI	CV	GI	
OVDR	Loss of RHRS due to Over-drain	X	(1)	(2)	(3)	X	(4)		POS 4-1 and POS 8-1
FLML	Loss of RHRS Caused by Failing to Maintain Water Level	X	(1)	(2)	(3)	X	(4)	(5)	POS 4 and POS 8
LOCA	Loss of Coolant Accident	X	(1)	(2)	(3)	X	(4)	(5)	All POSs
LORH	Loss of RHRS Caused by Other Failures				(3)	X	(4)	(5)	All POSs
LOCS	Loss of CCWS/ESWS (7)							(5)	All POSs
LOOP	Loss of Offsite Power			X (6)	(3) (6)	X (6)	(4) (6)	(5) (6)	All POSs

(Notes)
X: The system would be functional during and after a seismic event.
(1) MC is assumed to be non-functional due to a seismic event since the refueling water auxiliary tank is not Seismic Category I.
(2) Failure of MC would lead to loss of RH.
(3) SG is not available during POS 4-2, 4-3, 8-1 and 8-2.
(4) CV is assumed to be non-functional due to a seismic event since the refueling water auxiliary tank is not Seismic Category I.
(5) GI is assumed to be non-functional due to a seismic event since the refueling water recirculation pumps to provide boric water from RWSP to the spent fuel pits are not Seismic Category I.
(6) In order to operate mitigating systems, GT/G is required to start and run after loss of offsite power.
(7) The plant has a seismic margin for seismically induced loss of CCWS/ESWS since the seismic capacity of CCWS/ESWS is higher than review level earthquake

(Acronyms)
LO (Isolation of Letdown Line), MC (RCS Makeup by Charging Pumps), RH (Decay Heat Removed from the RCS by the RHRS on Standby), SG(Decay Heat Removed from the RCS via SGs), SI (High Head Injection), CV (Injection by Chemical and Volume Control System), GI (Gravitational Injection)

Table 19.1-121 Core Damage Frequency of Each Initiating Event and Each POS of Internal Fire at LPSD

IE	Event Description	POS3	POS4-1	POS4-2	POS4-3	POS8-1	POS8-2	POS8-3	POS9	POS11	Total
LOCA	Loss of coolant accident	1.2E-10	N/A	2.6E-11	6.5E-10	N/A	2.6E-11	5.2E-11	1.7E-11	1.7E-10	1.1E-09
OVDR	Loss of RHR due to over drain	N/A	1.0E-09	N/A	N/A	3.6E-09	N/A	N/A	N/A	N/A	4.6E-09
FLML	Loss of RHR Caused by failure to maintain water Level	N/A	N/A	1.2E-10	6.4E-10	N/A	1.1E-10	2.1E-10	N/A	N/A	1.1E-09
LOOP	Loss of Offsite Power	1.2E-09	1.2E-09	6.5E-10	1.0E-09	3.6E-09	6.5E-10	1.2E-09	4.1E-10	1.7E-09	1.2E-08
TOTAL		1.3E-09	2.2E-09	7.9E-10	2.3E-09	7.2E-09	7.8E-10	1.5E-09	4.2E-10	1.8E-09	1.8E-08

Table 19.1-122 Dominant Scenarios of Internal Fire at LPSD (POS 8-1) (Sheet 1 of 2)

Rank	Fire Scenario Number	Fire Scenarios	CDF (/RY)
1	YARD	This scenario contains main transformer, unit auxiliary transformers and reserve auxiliary transformers. Fire ignition source postulated in the switchyard are catastrophic fire, non-catastrophic fire and other fires of transformer. The fire ignition frequency is 2.1E-05/RY. Catastrophic fire in this switchyard may cause LOOP (loss of offsite power), and it is anticipated that the recovery of offsite power is not easy. CCDP of this fire scenario is estimated to 1.4E-04. Fire scenario postulated is as follows: ・Fire may cause LOOP because main transformer and reserve auxiliary transformers located in switchyard may be damaged by the fire. ・Offsite power cannot be recovered because the fire may damage all of main transformer, unit auxiliary transformers and reserve auxiliary transformers. ・Combination of the random failure of Class 1E gas turbine generators and the failure of switchover to AAC gas turbines generators.	2.9E-09
2	FA2-308	FA2-308 is Main Control Room. This scenario contains main control board. The fire ignition frequency is 8.8E-06/RY. If the fire occur in MCR while the RCS is being drained to mid-loop level, it may disturb operator action to stop the drain down process, and it results in OVDR. CCDP of this fire scenario is estimated to 2.6E-04. Fire scenario postulated is as follows: ・Fire may cause OVDR because the operator action to stop the drain down process may be disturbed by the fire. ・Failure to start standby SI pumps leads to core damage because it results in the loss of high head injection system function.	2.3E-09

Table 19.1-122 Dominant Scenarios of Internal Fire at LPSD (POS 8-1) (Sheet 2 of 2)

Rank	Fire Scenario Number	Fire Scenarios	CDF (/RY)
3	FA4-101	FA4-101 consists of all zones in A/B, and many fire ignition sources are contained in this area. Fire ignition frequency of this scenario is 8.2E-05/RY. Because the cable of CVS-LCV-031A (letdown line volume control tank inlet changeover Valve) is located in this compartment, fire induced cable damage has the potential to cause “Over-drain” event. Therefore, this fire scenario has been identified and CCDP of this scenario is estimated to 1.4E-05. Fire scenario is as follows: ・Spurious operation of CVS-LCV-031A may cause OVDR. ・No RCS injection by charging pump by the spurious closing of charging line stop valve (CVS-AOV-159). ・Failure to start standby SI pumps leads to core damage because it results in the loss of high head injection system function.	1.1E-09
4	FA6-101-04	FA6-101-04 has the potential of transient combustibles fire and cable fire caused by welding or cutting and so forth, whose fire ignition frequency is 4.8E-06/RY. This scenario also contains all four train cables to Class 1E bus ducts from offsite power sources. Therefore, the fire in this scenario may cause LOOP, and it may make the recovery of every power sources impossible. And, CCDP of this fire scenario is estimated to 1.4E-04. Fire scenario is as follows: ・Fire may cause LOOP because it may damage all four train cables to Class 1E bus ducts from offsite power located in FA6-101-04. ・Offsite power cannot be recovered because fire may damage all four train cables to Class 1E bus ducts from offsite power sources. ・Combination of the random failure of Class 1E gas turbine generators and the failure of changeover to AAC gas turbine generators.	6.8E-10

Table 19.1-123 Dominant Cutsets of Internal Fire at LPSD (POS 8-1) (Sheet 1 of 3)

No.	Cut Set Freq. (/RY)	Percent (%)	Cutsets	Basic Event Name
1	1.2E-09	17.0	FA2-308_8-1_B04	IGNITION SOURCE - MAIN CONTROL BOARD
			!MCRFIRE8-1	LOSS OF RHR DUE TO OVER DRAIN AT MCR EVACUATION - POS8-1
			CHIOO02P	(HE) FAIL TO START STANDBY CHARGING PUMP
			GI	GUARANTEED FAILURE OF GRAVITY INJECTION
			HPIOO02S-DP2	(HE) FAIL TO START STANDBY SAFETY INJECTION PUMP
			SG	GUARANTEED FAILURE OF DECAY HEAT REMOVAL BY SG
2	2.8E-10	4.0	FA2-308_8-1_B04	IGNITION SOURCE - MAIN CONTROL BOARD
			!MCRFIRE8-1	LOSS OF RHR DUE TO OVER DRAIN AT MCR EVACUATION - POS8-1
			CHIOO02P+RWS-DP3	(HE) FAIL TO START STANDBY CHARGING PUMP AND REFILL RWSAT WATER FROM RWSP
			GI	GUARANTEED FAILURE OF GRAVITY INJECTION
			HPIOO02S-DP2	(HE) FAIL TO START STANDBY SAFETY INJECTION PUMP
			LOAOO02OD	(HE) FAIL TO ISOLATE LOW-PRESSURE LETDOWN LINE
3	2.8E-10	4.0	FA2-308_8-1_B04	IGNITION SOURCE - MAIN CONTROL BOARD
			!MCRFIRE8-1	LOSS OF RHR DUE TO OVER DRAIN AT MCR EVACUATION - POS8-1
			CHIOO02RWS-DP3	(HE) FAIL TO REFILL RWSAT WATER FROM RWSP
			GI	GUARANTEED FAILURE OF GRAVITY INJECTION
			HPIOO02S-DP2	(HE) FAIL TO START STANDBY SAFETY INJECTION PUMP
			RSSOO02LINE+P	(HE) FAIL TO ESTABLISH RHR INJECTION LINE AND START STANDBY PUMP
			SG	GUARANTEED FAILURE OF DECAY HEAT REMOVAL BY SG
4	2.5E-10	3.6	FA4-101_8-1_B15	IGNITION SOURCE - ELECTRICAL CABINETS
			!OVDR8-1	LOSS OF RHR DUE TO OVERDRAIN - POS8-1
			CVCAVCD024C	RHS-AOV-024C FAIL TO CLOSE
			GI	GUARANTEED FAILURE OF GRAVITY INJECTION
			HPIOO02S	(HE) FAIL TO START STANDBY SAFETY INJECTION PUMP
			SG	GUARANTEED FAILURE OF DECAY HEAT REMOVAL BY SG

Table 19.1-123 Dominant Cutsets of Internal Fire at LPSD (POS 8-1) (Sheet 2 of 3)

No.	Cut Set Freq. (/RY)	Percent (%)	Cutsets	Basic Event Name
5	2.5E-10	3.6	FA4-101_8-1_B15	IGNITION SOURCE - ELECTRICAL CABINETS
			!OVDR8-1	LOSS OF RHR DUE TO OVERDRAIN - POS8-1
			CVCAVCD024B	RHS-AOV-024B FAIL TO CLOSE
			GI	GUARANTEED FAILURE OF GRAVITY INJECTION
			HPIOO02S	(HE) FAIL TO START STANDBY SAFETY INJECTION PUMP
			SG	GUARANTEED FAILURE OF DECAY HEAT REMOVAL BY SG
6	1.7E-10	2.4	FA2-308_8-1_B04	IGNITION SOURCE - MAIN CONTROL BOARD
			!MCRFIRE8-1	LOSS OF RHR DUE TO OVER DRAIN AT MCR EVACUATION - POS8-1
			CHIOO02P-R	(HE) FAIL TO START STANDBY CHARGING PUMP BY RCS
			HPIOO02S-R	(HE) FAIL TO START STANDBY SAFETY INJECTION PUMP BY RCS
			RSPEVA	PROBABILITY OF EVACUATION FROM THE MCR TO THE RSC ROOM
7	1.4E-10	1.9	FA4-101_8-1_B21	IGNITION SOURCE - PUMPS
			!OVDR8-1	LOSS OF RHR DUE TO OVERDRAIN - POS8-1
			CVCAVCD024C	RHS-AOV-024C FAIL TO CLOSE
			GI	GUARANTEED FAILURE OF GRAVITY INJECTION
			HPIOO02S	(HE) FAIL TO START STANDBY SAFETY INJECTION PUMP
			SG	GUARANTEED FAILURE OF DECAY HEAT REMOVAL BY SG
8	1.4E-10	1.9	FA4-101_8-1_B21	IGNITION SOURCE - PUMPS
			!OVDR8-1	LOSS OF RHR DUE TO OVERDRAIN - POS8-1
			CVCAVCD024B	RHS-AOV-024B FAIL TO CLOSE
			GI	GUARANTEED FAILURE OF GRAVITY INJECTION
			HPIOO02S	(HE) FAIL TO START STANDBY SAFETY INJECTION PUMP
			SG	GUARANTEED FAILURE OF DECAY HEAT REMOVAL BY SG

Table 19.1-123 Dominant Cutsets of Internal Fire at LPSD (POS 8-1) (Sheet 3 of 3)

No.	Cut Set Freq. (/RY)	Percent (%)	Cutsets	Basic Event Name
9	8.4E-11	1.2	FA2-308_8-1_B04	IGNITION SOURCE - MAIN CONTROL BOARD
			!MCRFIRE8-1	LOSS OF RHR DUE TO OVER DRAIN AT MCR EVACUATION - POS8-1
			CHIPMBD001A	CVS-MPP-001A (A-CHI PUMP) FAIL TO START
			GI	GUARANTEED FAILURE OF GRAVITY INJECTION
			HPIOO02S	(HE) FAIL TO START STANDBY SAFETY INJECTION PUMP
			SG	GUARANTEED FAILURE OF DECAY HEAT REMOVAL BY SG
10	5.7E-11	0.82	FA6-101-04_8-1_B36	IGNITION SOURCE - TRANSIENT FIRES CAUSED BY WELDING AND CUTTING
			!LOOP8-1	LOSS OF OFFSITE POWER - POS8-1
			EPSCF3DLLRGTG-ALL	CLASS-1E GTG A,B,C FAIL TO LOAD AND RUN AFTER FIRST HOUR OF OPERATION (CCF)
			EPSOO02RDG	(HE) FAIL TO CONNECT THE ALTERNATE AC POWER SOURCE TO CLASS 1E BUS

Table 19.1-124 Basic Events (Hardware and Human Error) FV Importance of Internal Fire at LPSD (POS8-1)

Rank	Basic Event ID	Basic Event Description	Basic Event Probability	FV Importance	RAW
1	GI	GUARANTEED FAILURE OF GRAVITY INJECTION	1.0E+00	5.8E-01	1.0E+00
2	SG	GUARANTEED FAILURE OF DECAY HEAT REMOVAL BY SG	1.0E+00	5.0E-01	1.0E+00
3	HPIOO02S-DP2	(HE) FAIL TO START STANDBY SAFETY INJECTION PUMP	5.5E-02	3.5E-01	7.1E+00
4	EPSCF3DLLRGTG-ALL	CLASS-1E GTG A,B,C FAIL TO LOAD AND RUN AFTER FIRST HOUR OF OPERATION (CCF)	1.1E-03	2.2E-01	1.9E+02
5	HPIOO02S	(HE) FAIL TO START STANDBY SAFETY INJECTION PUMP	4.9E-03	1.9E-01	3.9E+01
6	CHIOO02P	(HE) FAIL TO START STANDBY CHARGING PUMP	2.6E-03	1.8E-01	7.1E+01
7	EPSOO02RDG	(HE) FAIL TO CONNECT THE ALTERNATE AC POWER SOURCE TO CLASS 1E BUS	2.1E-02	1.3E-01	7.0E+00
8	CHIOO02P+RWS-DP3	(HE) FAIL TO START STANDBY CHARGING PUMP AND REFILL RWSAT WATER FROM RWSP	1.6E-01	1.2E-01	1.6E+00
9	EPSDLLRAACA	A-AAC FAIL TO LOAD AND RUN AFTER FIRST HOUR OF OPERATION	1.8E-02	1.1E-01	7.0E+00
10	CVCAVCD024B	RHS-AOV-024B FAIL TO CLOSE	1.2E-03	8.8E-02	7.4E+01

Table 19.1-125 Basic Events (Hardware and Human Error) RAW of Internal Fire at LPSD (POS8-1)

Rank	Basic Event ID	Basic Event Description	Basic Event Probability	FV Important	RAW
1	RTPBTSWCCF	BASIC SOFTWARE CCF	1.0E-07	1.9E-03	1.9E+04
2	SWSCF3PMYR001ABC-ALL	EWS-MPP-001A,B,C (EWS PUMP) FAIL TO RUN (CCF)	1.2E-07	6.0E-04	5.0E+03
3	CWSCF3PCYR001ABC-ALL	NCS-MPP-001A,B,C (CCW PUMP) FAIL TO RUN (CCF)	6.7E-08	3.4E-04	5.0E+03
4	CWSCF3RHPF001ABC-ALL	NCS-MHX-001A,B,C (CCW HX) PLUG / FOUL(CCF)	3.6E-08	1.8E-04	5.0E+03
5	EPSCF4CBSO52STL-ALL	EPS 52/STLA,B,C,D (BREAKER) SPURIOUS OPEN (CCF)	1.6E-07	5.5E-04	3.5E+03
6	EPSCF4CBSO52STH-ALL	EPS 52/STHA,B,C,D (BREAKER) SPURIOUS OPEN (CCF)	1.6E-07	5.5E-04	3.5E+03
7	EPSCBFO52RAT-ABC	EPS 52/RATA,B,C (BREAKER) FAIL TO OPEN (CCF)	5.2E-06	1.8E-02	3.5E+03
8	EPSCBFO52UAT-ABC	EPS 52/UATA,B,C (BREAKER) FAIL TO OPEN (CCF)	5.2E-06	1.8E-02	3.5E+03
9	EPSCF4CBSC52UAT-ALL	EPS 52/UATA,B,C,D (BREAKER) SPURIOUS CLOSE (CCF)	1.6E-07	5.5E-04	3.5E+03
10	EPSCF4CBSC52RAT-ALL	EPS 52/RATA,B,C,D (BREAKER) SPURIOUS CLOSE (CCF)	1.6E-07	5.5E-04	3.5E+03

Table 19.1-126 Core Damage Frequency of Each Initiating Event and Each POS of Internal Flood at LPSD

IE	Event Description	POS3	POS4-1	POS4-2	POS4-3	POS8-1	POS8-2	POS8-3	POS9	POS11	Total
LOCA	Loss of coolant accident	3.2E-12	3.2E-12	1.5E-12	3.8E-11	6.6E-11	6.6E-12	3.2E-12	1.1E-12	4.5E-12	1.3E-10
LOCS	Loss of CCW/ESWS	3.9E-11	7.0E-11	3.5E-12	1.6E-10	2.9E-08	4.5E-09	4.5E-08	1.5E-08	9.0E-11	9.4E-08
LORH	Loss of RHR	1.1E-14	2.4E-11	6.7E-12	4.0E-11	1.9E-10	6.7E-12	5.4E-12	1.8E-12	2.1E-14	2.7E-10
TOTAL		4.3E-11	9.7E-11	1.2E-11	2.4E-10	2.9E-08	4.5E-09	4.5E-08	1.5E-08	9.5E-11	9.5E-08

Table 19.1-127 Dominant Scenarios of Internal Flood at LPSD (POS 8-1) (Sheet 1 of 5)

Rank	Flood Area		Flood Category	Flood Scenarios	CDF (/RY)
1	FA2-507-02	R/B NRCA 4F East side SGBD Water Radiation Monitor Room	Flood	Flood due to the rupture of piping on the 4F of R/B east side SGBD water radiation monitor room causes loss of function of both A and B trains of component cooling water pumps, essential chillers, and batteries, by the effect of flood propagation. Also A and B-EFW pumps fail. The impacts to LPSD mitigation systems are assumed the most severe scenario. It is assumed that flood causes loss of function of both A and B trains of Class 1E electrical equipment, component cooling water pumps and batteries by the effect of flood propagation. Also A and B-EFW pumps fail. This scenario causes loss of component cooling water systems (LOCS) in conjunction with random failure of other side CCW system. Simultaneously,causes random failure or common cause failure of both C train and D train of safety systems for safe shutdown. This scenario results in core damage.	4.8E-09
2	FA2-414-01	R/B NRCA 3F East side Main Steam Piping Room Corridor	Major Flood	Major flood due to the rupture of piping on the 3F of R/B east side non restricted zone corridor causes loss of function of both A and B trains of Class 1E AC 120V panel boards, component cooling water pumps, essential chillers, and batteries, by the effect of flood propagation. Also A and B-EFW pumps fail. The impacts to LPSD mitigation systems are assumed the most severe scenario. It is assumed that major flood causes loss of function of both A and B trains of Class 1E electrical equipment, component cooling water pumps and batteries by the effect of flood propagation. Also A and B-EFW pumps fail. This scenario causes loss of component cooling water systems (LOCS) in conjunction with random failure of other side CCW system. Simultaneously, causes random failure or common cause failure of both C train and D train of safety systems for safe shutdown. This scenario results in core damage.	4.8E-09

Table 19.1-127 Dominant Scenarios of Internal Flood at LPSD (POS 8-1) (Sheet 2 of 5)

Rank	Flood Area		Flood Category	Flood Scenarios	CDF (/RY)
3	FA2-320-01	R/B NRCA 2F East side Corridor	Major Flood	Major flood due to the rupture of piping on the 2F of R/B east side non restricted zone corridor causes loss of function of both A and B trains of Class 1E AC 120V panel boards, Class 1E 6.9kV buses, component cooling water pumps, essential chillers, and batteries, by the effect of flood propagation. Also A and B-EFW pumps fail. The impacts to LPSD mitigation systems are assumed the most severe scenario. It is assumed that major flood causes loss of function of both A and B trains of Class 1E electrical equipment, component cooling water pumps and batteries by the effect of flood propagation. Also A and B-EFW pumps fail. This scenario causes loss of component cooling water systems (LOCS) in conjunction with random failure of other side CCW system. Simultaneously, causes random failure or common cause failure of both C train and D train of safety systems for safe shutdown. This scenario results in core damage.	4.0E-09
4	FA2-102-01	NRCA B1F East side A-EFW (T/D) Pump Room	Major Flood	Major flood due to the rupture of piping in the A-EFW Pump (T/D) room on the B1F of R/B causes loss of function of both A and B trains of component cooling water pumps, essential chillers, and batteries by the effect of flooding propagation. Also A and B EFW pumps fail. The impacts to LPSD mitigation systems are assumed the worst scenario. It is assumed that major flood causes loss of function of both A and B trains of Class 1E electrical equipment, component cooling water pumps and batteries by the effect of flood propagation. Also B-EFW pump (M/D) fail. This scenario causes loss of component cooling water systems (LOCS) in conjunction with random failure of other side CCW system. Simultaneously, causes random failure or common cause failure of both C train and D train of safety systems for safe shutdown. This scenario results in core damage.	2.2E-09

Table 19.1-127 Dominant Scenarios of Internal Flood at LPSD (POS 8-1) (Sheet 3 of 5)

Rank	Flood Area		Flood Category	Flood Scenarios	CDF (/RY)
5	FA2-111-01	R/B NRCA B1F East side Corridor	Major Flood	Major Flood due to the rupture of piping on the B1F of R/B east side non restricted zone corridor causes loss of function of both A and B trains of component cooling water pumps, essential chillers, and batteries, by the effect of flood propagation. Also A and B-EFW pumps fail. The impacts to LPSD mitigation systems are assumed the most severe scenario. It is assumed that major flood causes loss of function of both A and B trains of Class 1E electrical equipment, component cooling water pumps and batteries by the effect of flood propagation. Also A and B-EFW pumps fail. This scenario causes loss of component cooling water systems (LOCS) in conjunction with random failure of other side CCW system. Simultaneously, causes random failure or common cause failure of both C train and D train of safety systems for safe shutdown. This scenario results in core damage.	2.1E-09
6	FA2-420-01	R/B NRCA 3F East side Corridor	Flood	Flood due to the rupture of piping on the 3F of R/B east side non restricted zone corridor causes loss of function of both A and B trains of Class 1E AC 120V panel boards, component cooling water pumps, essential chillers, and batteries, by the effect of flood propagation. Also A and B-EFW pumps fail. The impacts to LPSD mitigation systems are assumed the most severe scenario. It is assumed that flood causes loss of function of both A and B trains of Class 1E electrical equipment, component cooling water pumps and batteries by the effect of flood propagation. Also A and B-EFW pumps fail. This scenario causes loss of component cooling water systems (LOCS) in conjunction with random failure of other side CCW system. Simultaneously, causes random failure or common cause failure of both C train and D train of safety systems for safe shutdown. This scenario results in core damage.	1.6E-09

Table 19.1-127 Dominant Scenarios of Internal Flood at LPSD (POS 8-1) (Sheet 4 of 5)

Rank	Flood Area		Flood Category	Flood Scenarios	CDF (/RY)
7	FA2-102-01	NRCA B1F East side A-EFW (T/D) Pump Room	Flood	Flood due to the rupture of piping in the A-EFW Pump (T/D) room on the B1F of R/B causes loss of function of both A and B trains of component cooling water pumps, essential chillers, and batteries by the effect of flooding propagation. Also A and B EFW pumps fail. The impacts to LPSD mitigation systems are assumed the most severe scenario. It is assumed that flood causes loss of function of both A and B trains of Class 1E electrical equipment, component cooling water pumps and batteries by the effect of flood propagation. Also B-EFW pump (M/D) fail. This scenario causes loss of component cooling water systems (LOCS) in conjunction with random failure of other side CCW system. Simultaneously, causes random failure or common cause failure of both C train and D train of safety systems for safe shutdown. This scenario results in core damage.	1.3E-09
8	FA2-320-01	R/B NRCA 2F East side Corridor	Flood	Flood due to the rupture of piping on the 2F of R/B east side non restricted zone corridor causes loss of function of both A and B trains of Class 1E AC 120V panel boards, Class 1E 6.9kV buses, component cooling water pumps, essential chillers, and batteries, by the effect of flood propagation. Also A and B-EFW pumps fail. The impacts to LPSD mitigation systems are assumed the most severe scenario. It is assumed that flood causes loss of function of both A and B trains of Class 1E electrical equipment, component cooling water pumps and batteries by the effect of flood propagation. Also A and B-EFW pumps fail. This scenario causes loss of component cooling water systems (LOCS) in conjunction with random failure of other side CCW system. Simultaneously, causes random failure or common cause failure of both C train and D train of safety systems for safe shutdown. This scenario results in core damage.	1.2E-09

Table 19.1-127 Dominant Scenarios of Internal Flood at LPSD (POS 8-1) (Sheet 5 of 5)

Rank	Flood Area		Flood Category	Flood Scenarios	CDF (/RY)
9	FA2-414-01	R/B NRCA 3F East side Main Steam Piping Room Corridor	Flood	Flood due to the rupture of piping on the 3F of R/B east side non restricted zone corridor causes loss of function of both A and B trains of Class 1E AC 120V panel boards, component cooling water pumps, essential chillers, and batteries, by the effect of flood propagation. Also A and B-EFW pumps fail. The impacts to LPSD mitigation systems are assumed the most severe scenario. It is assumed that flood causes loss of function of both A and B trains of Class 1E electrical equipment, component cooling water pumps and batteries by the effect of flood propagation. Also A and B-EFW pumps fail. This scenario causes loss of component cooling water systems (LOCS) in conjunction with random failure of other side CCW system. Simultaneously, causes random failure or common cause failure of both C train and D train of safety systems for safe shutdown. This scenario results in core damage.	1.2E-09
10	FA2-507-01	R/B NRCA 4F East side Non-Radioactive Zone Corridor	Major Flood	Major flood due to the rupture of piping on the 4F of R/B east side non restricted zone corridor causes loss of function of both A and B trains of component cooling water pumps, essential chillers, and batteries, by the effect of flood propagation. Also A and B-EFW pumps fail. The impacts to LPSD mitigation systems are assumed the most severe scenario. It is assumed that major flood causes loss of function of both A and B trains of Class 1E electrical equipment, component cooling water pumps and batteries by the effect of flood propagation. Also A and B-EFW pumps fail. This scenario causes loss of component cooling water systems (LOCS) in conjunction with random failure of other side CCW system. Simultaneously, causes random failure or common cause failure of both C train and D train of safety systems for safe shutdown. This scenario results in core damage.	7.8E-10

Table 19.1-128 Dominant Cutsets of Internal Flood at LPSD (POS 8-1) (Sheet 1 of 5)

No.	Cutsets Freq.(/RY)	Percent	Cutsets	Frequency/ Probability	Basic Event Description	
1	4.8E-09	17.1	250702-P81-LOCS-F05	1.0E-03	PIPE FAILURE RATE PER ONE YEAR BY INTERNAL FLOODING (FA2-507-02, SGBD, FLOOD)	
			POS8-1FACTOR	3.4E-03	THE FACTOR WHICH CONVERTS PIPE FAILURE RATE PER ONE YEAR INTO PIPE FAILURE RATE DURING POS8-1(60.0H)	Loss of CCWS/ ESWS
			RAM-LOCS-FM2	1.4E-03	FAILURE PROBABILITY OF ONE TRAIN OF THE CCW SYSTEM BY THE RANDOM FAILURE.	
			GI	1.0E+00	GUARANTEED FAILURE OF GRAVITY INJECTION	
2	4.0E-09	14.2	232001-P81-LOCS-M02	8.5E-04	PIPE FAILURE RATE PER ONE YEAR BY INTERNAL FLOODING (FA2-320-01, EFWS, MAJOR FLOOD)	
			POS8-1FACTOR	3.4E-03	THE FACTOR WHICH CONVERTS PIPE FAILURE RATE PER ONE YEAR INTO PIPE FAILURE RATE DURING POS8-1(60.0H)	Loss of CCWS/ ESWS
			RAM-LOCS-FM2	1.4E-03	FAILURE PROBABILITY OF ONE TRAIN OF THE CCW SYSTEM BY THE RANDOM FAILURE.	
			GI	1.0E+00	GUARANTEED FAILURE OF GRAVITY INJECTION	

Table 19.1-128 Dominant Cutsets of Internal Flood at LPSD (POS 8-1) (Sheet 2 of 5)

No.	Cutsets Freq.(/RY)	Percent	Cutsets	Frequency/ Probability	Basic Event Description	
3	2.2E-09	8.0	210201-P81-LOCS-M02	4.8E-04	PIPE FAILURE RATE PER ONE YEAR BY INTERNAL FLOODING (FA2-102-01, EFWS, MAJOR FLOOD)	
			POS8-1FACTOR	3.4E-03	THE FACTOR WHICH CONVERTS PIPE FAILURE RATE PER ONE YEAR INTO PIPE FAILURE RATE DURING POS8-1(60.0H)	Loss of CCWS/ ESWS
			RAM-LOCS-FM2	1.4E-03	FAILURE PROBABILITY OF ONE TRAIN OF THE CCW SYSTEM BY THE RANDOM FAILURE.	
			GI	1.0E+00	GUARANTEED FAILURE OF GRAVITY INJECTION	
4	2.2E-09	8.0	241401-P81-LOCS-M03	4.8E-04	PIPE FAILURE RATE PER ONE YEAR BY INTERNAL FLOODING (FA2-414-01, MFWS, MAJOR FLOOD)	
			POS8-1FACTOR	3.4E-03	THE FACTOR WHICH CONVERTS PIPE FAILURE RATE PER ONE YEAR INTO PIPE FAILURE RATE DURING POS8-1(60.0H)	Loss of CCWS/ ESWS
			RAM-LOCS-FM2	1.4E-03	FAILURE PROBABILITY OF ONE TRAIN OF THE CCW SYSTEM BY THE RANDOM FAILURE.	
			GI	1.0E+00	GUARANTEED FAILURE OF GRAVITY INJECTION	

Table 19.1-128 Dominant Cutsets of Internal Flood at LPSD (POS 8-1) (Sheet 3 of 5)

No.	Cutsets Freq.(/RY)	Percent	Cutsets	Frequency/ Probability	Basic Event Description	
5	1.9E-09	6.6	211101-P81-LOCS-M02	3.9E-04	PIPE FAILURE RATE PER ONE YEAR BY INTERNAL FLOODING (FA2-111-01, EFWS, MAJOR FLOOD)	
			POS8-1FACTOR	3.4E-03	THE FACTOR WHICH CONVERTS PIPE FAILURE RATE PER ONE YEAR INTO PIPE FAILURE RATE DURING POS8-1(60.0H)	Loss of CCWS/ ESWS
			RAM-LOCS-FM2	1.4E-03	FAILURE PROBABILITY OF ONE TRAIN OF THE CCW SYSTEM BY THE RANDOM FAILURE.	
			GI	1.0E+00	GUARANTEED FAILURE OF GRAVITY INJECTION	
6	1.6E-09	5.7	242001-P81-LOCS-F05	3.4E-04	PIPE FAILURE RATE PER ONE YEAR BY INTERNAL FLOODING (FA2-420-01, SGBD, FLOOD)	
			POS8-1FACTOR	3.4E-03	THE FACTOR WHICH CONVERTS PIPE FAILURE RATE PER ONE YEAR INTO PIPE FAILURE RATE DURING POS8-1(60.0H)	Loss of CCWS/ ESWS
			RAM-LOCS-FM2	1.4E-03	FAILURE PROBABILITY OF ONE TRAIN OF THE CCW SYSTEM BY THE RANDOM FAILURE.	
			GI	1.0E+00	GUARANTEED FAILURE OF GRAVITY INJECTION	

Table 19.1-128 Dominant Cutsets of Internal Flood at LPSD (POS 8-1) (Sheet 4 of 5)

No.	Cutsets Freq.(/RY)	Percent	Cutsets	Frequency/ Probability	Basic Event Description	
7	1.3E-09	4.6	210201-P81-LOCS-F02	2.7E-04	PIPE FAILURE RATE PER ONE YEAR BY INTERNAL FLOODING (FA2-102-01, EFWS, FLOOD)	
			POS8-1FACTOR	3.4E-03	THE FACTOR WHICH CONVERTS PIPE FAILURE RATE PER ONE YEAR INTO PIPE FAILURE RATE DURING POS8-1(60.0H)	Loss of CCWS/ ESWS
			RAM-LOCS-FM2	1.4E-03	FAILURE PROBABILITY OF ONE TRAIN OF THE CCW SYSTEM BY THE RANDOM FAILURE.	
			GI	1.0E+00	GUARANTEED FAILURE OF GRAVITY INJECTION	
8	1.2E-09	4.3	241401-P81-LOCS-M06	2.6E-04	PIPE FAILURE RATE PER ONE YEAR BY INTERNAL FLOODING (FA2-414-01, SGBD, MAJOR FLOOD)	
			POS8-1FACTOR	3.4E-03	THE FACTOR WHICH CONVERTS PIPE FAILURE RATE PER ONE YEAR INTO PIPE FAILURE RATE DURING POS8-1(60.0H)	Loss of CCWS/ ESWS
			RAM-LOCS-FM2	1.4E-03	FAILURE PROBABILITY OF ONE TRAIN OF THE CCW SYSTEM BY THE RANDOM FAILURE.	
			GI	1.0E+00	GUARANTEED FAILURE OF GRAVITY INJECTION	

Table 19.1-128 Dominant Cutsets of Internal Flood at LPSD (POS 8-1) (Sheet 5 of 5)

No.	Cutsets Freq.(/RY)	Percent	Cutsets	Frequency/ Probability	Basic Event Description	
9	1.2E-09	4.3	232001-P81-LOCS-F02	2.6E-04	PIPE FAILURE RATE PER ONE YEAR BY INTERNAL FLOODING (FA2-320-01, EFWS, FLOOD)	Loss of CCWS/ ESWS
			POS8-1FACTOR	3.4E-03	THE FACTOR WHICH CONVERTS PIPE FAILURE RATE PER ONE YEAR INTO PIPE FAILURE RATE DURING POS8-1(60.0H)	
			RAM-LOCS-FM2	1.4E-03	FAILURE PROBABILITY OF ONE TRAIN OF THE CCW SYSTEM BY THE RANDOM FAILURE.	
			GI	1.0E+00	GUARANTEED FAILURE OF GRAVITY INJECTION	
10	1.1E-09	3.8	210301-P81-LOCS-M02	2.2E-04	PIPE FAILURE RATE PER ONE YEAR BY INTERNAL FLOODING (FA2-103-01, EFWS, MAJOR FLOOD)	Loss of CCWS/ ESWS
			POS8-1FACTOR	3.4E-03	THE FACTOR WHICH CONVERTS PIPE FAILURE RATE PER ONE YEAR INTO PIPE FAILURE RATE DURING POS8-1(60.0H)	
			RAM-LOCS-FM2	1.4E-03	FAILURE PROBABILITY OF ONE TRAIN OF THE CCW SYSTEM BY THE RANDOM FAILURE.	
			GI	1.0E+00	GUARANTEED FAILURE OF GRAVITY INJECTION	

Table 19.1-129 Basic Events (Hardware and Human Error) FV Importance of Internal Flood at LPSD (POS8-1)

Rank	Basic Event ID	Basic Event Description	Basic Event Probability	FV Importance	RAW
1	GI	GUARANTEED FAILURE OF GRAVITY INJECTION	1.0E+00	1.0E+00	1.0E+00
2	SWSSTPRSST002C	EWS-SST-002C (STRAINER) PLUG	4.2E-04	1.0E+00	7.3E+02
3	SWSPMYR001C	EWS-MPP-001C (C-ESW PUMP) FAIL TO RUN	3.0E-04	1.0E+00	7.3E+02
4	CWSPCYR001C	NCS-MPP-001C (C-CCW PUMP) FAIL TO RUN	1.7E-04	1.0E+00	7.3E+02
5	CWSORPR037	NCS-FE-037 (ORIFICE) PLUG	6.0E-05	1.0E+00	7.3E+02
6	SWSORPR002C	EWS-SRO-002C (ORIFICE) PLUG	6.0E-05	1.0E+00	7.3E+02
7	SWSFMPR072	EWS-FT-072 (FLOW METER) PLUG	6.0E-05	1.0E+00	7.3E+02
8	SWSORPR036	EWS-FE-036 (ORIFICE) PLUG	6.0E-05	1.0E+00	7.3E+02
9	SWSORPR001C	EWS-SRO-001C (ORIFICE) PLUG	6.0E-05	1.0E+00	7.3E+02
10	CWSORPR042	NCS-FE-042 (ORIFICE) PLUG	6.0E-05	1.0E+00	7.3E+02

Table 19.1-130 Basic Events (Hardware and Human Error) RAW of Internal Flood at LPSD (POS8-1)

Rank	Basic Event ID	Basic Event Description	Basic Event Probability	RAW	FV Importance
1	SWSSTPRSST002C	EWS-SST-002C (STRAINER) PLUG	4.2E-04	7.3E+02	1.0E+00
2	SWSPMYR001C	EWS-MPP-001C (C-ESW PUMP) FAIL TO RUN	3.0E-04	7.3E+02	1.0E+00
3	CWSPCYR001C	NCS-MPP-001C (C-CCW PUMP) FAIL TO RUN	1.7E-04	7.3E+02	1.0E+00
4	CWSORPR037	NCS-FE-037 (ORIFICE) PLUG	6.0E-05	7.3E+02	1.0E+00
5	SWSORPR002C	EWS-SRO-002C (ORIFICE) PLUG	6.0E-05	7.3E+02	1.0E+00
6	SWSFMPR072	EWS-FT-072 (FLOW METER) PLUG	6.0E-05	7.3E+02	1.0E+00
7	SWSORPR036	EWS-FE-036 (ORIFICE) PLUG	6.0E-05	7.3E+02	1.0E+00
8	SWSORPR001C	EWS-SRO-001C (ORIFICE) PLUG	6.0E-05	7.3E+02	1.0E+00
9	CWSORPR042	NCS-FE-042 (ORIFICE) PLUG	6.0E-05	7.3E+02	1.0E+00
10	EPSBSFFMCC	C-CLASS 1E 6.9KV SWITCHGEAR FAILURE	1.4E-05	7.3E+02	1.0E+00

Table 19.1-131 LOCCW with Reactor Trip Resulting Loss of Decay Heat via SGs Sequence Dominant Cutsets (Sheet 1 of 4)

Rank	Cutsets Freq. (/RY)	Percent (%)	Cutsets	Basic Event Name
1	1.1E-08	28.0	!15LOCCW	LOSS OF COMPONENT COOLING WATER
			EFWCF2PTAD001AD-ALL	EFS-MPP-001A,D (EFW PUMP) FAIL TO START (CCF)
			RCP----SEAL	RCP SEAL LOCA
2	2.7E-09	6.9	!15LOCCW	LOSS OF COMPONENT COOLING WATER
			EFWCF2PTSR001AD-ALL	EFS-MPP-001A,D (EFW PUMP) FAIL TO RUN DURING FIRST HOUR OF OPERATION (CCF)
			RCP----SEAL	RCP SEAL LOCA
3	2.7E-09	6.8	!15LOCCW	LOSS OF COMPONENT COOLING WATER
			EFWOO01006AB	(HE) FAIL TO CHANGEOVER EFW PIT
			EFWPTAD001D	EFS-MPP-001D (D-EFW PUMP) FAIL TO START
			RCP----SEAL	RCP SEAL LOCA
4	2.7E-09	6.8	!15LOCCW	LOSS OF COMPONENT COOLING WATER
			EFWOO01006AB	(HE) FAIL TO CHANGEOVER EFW PIT
			EFWPTAD001A	EFS-MPP-001A (A-EFW PUMP) FAIL TO START
			RCP----SEAL	RCP SEAL LOCA
5	2.1E-09	5.2	!15LOCCW	LOSS OF COMPONENT COOLING WATER
			EFWOO01006AB	(HE) FAIL TO CHANGEOVER EFW PIT
			EFWTMTA001D	EFS-MPP-001D (D-EFW PUMP) TEST & MAINTENANCE
			RCP----SEAL	RCP SEAL LOCA
6	2.1E-09	5.2	!15LOCCW	LOSS OF COMPONENT COOLING WATER
			EFWOO01006AB	(HE) FAIL TO CHANGEOVER EFW PIT
			EFWTMTA001A	EFS-MPP-001A (A-EFW PUMP) TEST & MAINTENANCE
			RCP----SEAL	RCP SEAL LOCA

Table 19.1-131 LOCCW with Reactor Trip Resulting Loss of Decay Heat via SGs Sequence Dominant Cutsets (Sheet 2 of 4)

Rank	Cutsets Freq. (/RY)	Percent (%)	Cutsets	Basic Event Name
7	1.8E-09	4.5	!15LOCCW	LOSS OF COMPONENT COOLING WATER
			EFWCF2PTLR001AD-ALL	EFS-MPP-001A,D (EFW PUMP) FAIL TO RUN AFTER FIRST HOUR OF OPERATION (CCF)
			RCP----SEAL	RCP SEAL LOCA
8	1.0E-09	2.7	!15LOCCW	LOSS OF COMPONENT COOLING WATER
			EFWPTAD001A	EFS-MPP-001A (A-EFW PUMP) FAIL TO START
			EFWPTAD001D	EFS-MPP-001D (D-EFW PUMP) FAIL TO START
			RCP----SEAL	RCP SEAL LOCA
9	1.0E-09	2.6	!15LOCCW	LOSS OF COMPONENT COOLING WATER
			EFWCF2MVOD103-ALL	EFS-MOV-103A,D FAIL TO OPEN (CCF)
			RCP----SEAL	RCP SEAL LOCA
10	9.8E-10	2.5	!15LOCCW	LOSS OF COMPONENT COOLING WATER
			EFWOO01006AB	(HE) FAIL TO CHANGEOVER EFW PIT
			EFWPTSR001A	EFS-MPP-001A (A-EFW PUMP) FAIL TO RUN DURING FIRST HOUR OF OPERATION
			RCP----SEAL	RCP SEAL LOCA
11	9.8E-10	2.5	!15LOCCW	LOSS OF COMPONENT COOLING WATER
			EFWOO01006AB	(HE) FAIL TO CHANGEOVER EFW PIT
			EFWPTSR001D	EFS-MPP-001D (D-EFW PUMP) FAIL TO RUN DURING FIRST HOUR OF OPERATION
			RCP----SEAL	RCP SEAL LOCA

Table 19.1-131 LOCCW with Reactor Trip Resulting Loss of Decay Heat via SGs Sequence Dominant Cutsets (Sheet 3 of 4)

Rank	Cutsets Freq. (/RY)	Percent (%)	Cutsets	Basic Event Name
12	8.0E-10	2.0	!15LOCCW	LOSS OF COMPONENT COOLING WATER
			EFWPTAD001A	EFS-MPP-001A (A-EFW PUMP) FAIL TO START
			EFWTMTA001D	EFS-MPP-001D (D-EFW PUMP) TEST & MAINTENANCE
			RCP----SEAL	RCP SEAL LOCA
13	8.0E-10	2.0	!15LOCCW	LOSS OF COMPONENT COOLING WATER
			EFWPTAD001D	EFS-MPP-001D (D-EFW PUMP) FAIL TO START
			EFWTMTA001A	EFS-MPP-001A (A-EFW PUMP) TEST & MAINTENANCE
			RCP----SEAL	RCP SEAL LOCA
14	6.3E-10	1.6	!15LOCCW	LOSS OF COMPONENT COOLING WATER
			EFWOO01006AB	(HE) FAIL TO CHANGEOVER EFW PIT
			EFWPTLR001D	EFS-MPP-001D (D-EFW PUMP) FAIL TO RUN AFTER FIRST HOUR OF OPERATION
			RCP----SEAL	RCP SEAL LOCA
15	6.3E-10	1.6	!15LOCCW	LOSS OF COMPONENT COOLING WATER
			EFWOO01006AB	(HE) FAIL TO CHANGEOVER EFW PIT
			EFWPTLR001A	EFS-MPP-001A (A-EFW PUMP) FAIL TO RUN AFTER FIRST HOUR OF OPERATION
			RCP----SEAL	RCP SEAL LOCA
16	4.1E-10	1.0	!15LOCCW	LOSS OF COMPONENT COOLING WATER
			EFWOO01014	(HE) FAIL TO OPEN EFW TIE-LINE VALVE BETWEEN TRAINS
			EFWPTAD001A	EFS-MPP-001A (A-EFW PUMP) FAIL TO START
			RCP----SEAL	RCP SEAL LOCA

Table 19.1-131 LOCCW with Reactor Trip Resulting Loss of Decay Heat via SGs Sequence Dominant Cutsets (Sheet 4 of 4)

Rank	Cutsets Freq. (/RY)	Percent (%)	Cutsets	Basic Event Name
17	4.1E-10	1.0	!15LOCCW	LOSS OF COMPONENT COOLING WATER
			EFWOO01014	(HE) FAIL TO OPEN EFW TIE-LINE VALVE BETWEEN TRAINS
			EFWPTAD001D	EFS-MPP-001D (D-EFW PUMP) FAIL TO START
			RCP----SEAL	RCP SEAL LOCA
18	4.0E-10	1.0	!15LOCCW	LOSS OF COMPONENT COOLING WATER
			EFWMVOD103D	EFS-MOV-103D FAIL TO OPEN
			EFWOO01006AB	(HE) FAIL TO CHANGEOVER EFW PIT
			RCP----SEAL	RCP SEAL LOCA
19	4.0E-10	1.0	!15LOCCW	LOSS OF COMPONENT COOLING WATER
			EFWMVOD103A	EFS-MOV-103A FAIL TO OPEN
			EFWOO01006AB	(HE) FAIL TO CHANGEOVER EFW PIT
			RCP----SEAL	RCP SEAL LOCA
20	3.8E-10	0.96	!15LOCCW	LOSS OF COMPONENT COOLING WATER
			EFWPTAD001A	EFS-MPP-001A (A-EFW PUMP) FAIL TO START
			EFWPTSR001D	EFS-MPP-001D (D-EFW PUMP) FAIL TO RUN DURING FIRST HOUR OF OPERATION
			RCP----SEAL	RCP SEAL LOCA

Table 19.1-132 SLOCA with Reactor Trip Resulting Loss of Core Cooling Sequence Dominant Cutsets (Sheet 1 of 3)

Rank	Cutsets Freq. (/RY)	Percent (%)	Cutsets	Basic Event Name
1	3.5E-08	89.7	!03SLOCA RWSCF4SUPR001-ALL	SMALL PIPE BREAK LOCA SIS-SST-001A,B,C,D (ESS/CS STRAINER) PLUG DURING OPERATION (CCF)
2	2.6E-10	0.66	!03SLOCA RWSXVEL024	SMALL PIPE BREAK LOCA RWS-VLV-024 EXTERNAL LEAK LARGE
3	2.6E-10	0.66	!03SLOCA RWSXVEL001	SMALL PIPE BREAK LOCA RWS-VLV-001 EXTERNAL LEAK LARGE
4	1.7E-10	0.44	!03SLOCA RWSTNEL001	SMALL PIPE BREAK LOCA RWS-MCP-001 (RWSP) EXTERNAL LEAK LARGE
5	1.7E-10	0.44	!03SLOCA RWSCVEL023	SMALL PIPE BREAK LOCA RWS-VLV-023 EXTERNAL LEAK LARGE
6	1.6E-10	0.41	!03SLOCA RWSCF4SUPR001-124 SWSTMPE001D	SMALL PIPE BREAK LOCA SIS-SST-001A,B,C (ESS/CS STRAINER) PLUG DURING OPERATION (CCF) EWS-MPP-001D (D-ESW PUMP) TEST & MAINTENANCE
7	1.6E-10	0.41	!03SLOCA RWSCF4SUPR001-234 SWSTMPE001B	SMALL PIPE BREAK LOCA SIS-SST-001A,C,D (ESS/CS STRAINER) PLUG DURING OPERATION (CCF) EWS-MPP-001B (B-ESW PUMP) TEST & MAINTENANCE
8	1.0E-10	0.26	!03SLOCA RSSOO01CSS001D RSSRIEL001D	SMALL PIPE BREAK LOCA (HE) FAIL TO ISOLATE CS/RHR TRAIN D WHEN IT IS LEAKING RHS-MHX-001D (D-CS/RHR HX) TUBE EXTERNAL LEAK LARGE
9	1.0E-10	0.26	!03SLOCA RSSOO01CSS001B RSSRIEL001B	SMALL PIPE BREAK LOCA (HE) FAIL TO ISOLATE CS/RHR TRAIN B WHEN IT IS LEAKING RHS-MHX-001B (B-CS/RHR HX) TUBE EXTERNAL LEAK LARGE

Table 19.1-132 SLOCA with Reactor Trip Resulting Loss of Core Cooling Sequence Dominant Cutsets (Sheet 2 of 3)

Rank	Cutsets Freq. (/RY)	Percent (%)	Cutsets	Basic Event Name
10	1.0E-10	0.26	!03SLOCA	SMALL PIPE BREAK LOCA
			RSSOO01CSS001A	(HE) FAIL TO ISOLATE CS/RHR TRAIN A WHEN IT IS LEAKING
			RSSRIEL001A	RHS-MHX-001A (A-CS/RHR HX) TUBE EXTERNAL LEAK LARGE
11	1.0E-10	0.26	!03SLOCA	SMALL PIPE BREAK LOCA
			RSSOO01CSS001C	(HE) FAIL TO ISOLATE CS/RHR TRAIN C WHEN IT IS LEAKING
			RSSRIEL001C	RHS-MHX-001C (C-CS/RHR HX) TUBE EXTERNAL LEAK LARGE
12	9.3E-11	0.24	!03SLOCA	SMALL PIPE BREAK LOCA
			CWSTMRC001B	NCS-MHX-001B (B-CCW HX) TEST & MAINTENANCE
			RWSCF4SUPR001-234	SIS-SST-001A,C,D (ESS/CS STRAINER) PLUG DURING OPERATION (CCF)
13	9.3E-11	0.24	!03SLOCA	SMALL PIPE BREAK LOCA
			CWSTMRC001D	NCS-MHX-001D (D-CCW HX) TEST & MAINTENANCE
			RWSCF4SUPR001-124	SIS-SST-001A,B,C (ESS/CS STRAINER) PLUG DURING OPERATION (CCF)
14	8.6E-11	0.22	!03SLOCA	SMALL PIPE BREAK LOCA
			HPIMVEL001B	SIS-MOV-001B EXTERNAL LEAK LARGE
15	8.6E-11	0.22	!03SLOCA	SMALL PIPE BREAK LOCA
			RSSMVELCSS001C	CSS-MOV-001C EXTERNAL LEAK LARGE
16	8.6E-11	0.22	!03SLOCA	SMALL PIPE BREAK LOCA
			HPIMVEL001C	SIS-MOV-001C EXTERNAL LEAK LARGE
17	8.6E-11	0.22	!03SLOCA	SMALL PIPE BREAK LOCA
			HPIMVEL001D	SIS-MOV-001D EXTERNAL LEAK LARGE
18	8.6E-11	0.22	!03SLOCA	SMALL PIPE BREAK LOCA
			RSSMVELCSS001D	CSS-MOV-001D EXTERNAL LEAK LARGE

Table 19.1-132 SLOCA with Reactor Trip Resulting Loss of Core Cooling Sequence Dominant Cutsets (Sheet 3 of 3)

Rank	Cutsets Freq. (/RY)	Percent (%)	Cutsets	Basic Event Name
19	8.6E-11	0.22	!03SLOCA	SMALL PIPE BREAK LOCA
			RWSMVEL002	RWS-MOV-002 EXTERNAL LEAK LARGE
20	8.6E-11	0.22	!03SLOCA	SMALL PIPE BREAK LOCA
			RSSMVELCSS001B	CSS-MOV-001B EXTERNAL LEAK LARGE

Table 19.1-133 LOFF with Reactor Trip Resulting Failure of RCS Depressurization Sequence Dominant Cutsets (Sheet 1 of 5)

Rank	Cutsets Freq. (/RY)	Percent (%)	Cutsets	Basic Event Name
1	1.7E-09	6.8	!14LOFF	LOSS OF FEED WATER FLOW
			EFWCF2CVOD008-ALL	EFS-VLV-008A,B FAIL TO OPEN (CCF)
			HPIOO02FWBD	(HE) FAIL TO OPEN SAFETY DEPRESSURIZATION VALVE AND START SAFETY INJECTION PUMP
2	1.2E-09	4.8	!14LOFF	LOSS OF FEED WATER FLOW
			EFWCF4CVOD012-ALL	EFS-VLV-012A,B,C,D FAIL TO OPEN (CCF)
			HPIOO02FWBD	(HE) FAIL TO OPEN SAFETY DEPRESSURIZATION VALVE AND START SAFETY INJECTION PUMP
3	1.2E-09	4.8	!14LOFF	LOSS OF FEED WATER FLOW
			EFWCF4CVOD018-ALL	EFS-VLV-018A,B,C,D FAIL TO OPEN (CCF)
			HPIOO02FWBD	(HE) FAIL TO OPEN SAFETY DEPRESSURIZATION VALVE AND START SAFETY INJECTION PUMP
4	9.8E-10	3.9	!14LOFF	LOSS OF FEED WATER FLOW
			HPIOO02FWBD	(HE) FAIL TO OPEN SAFETY DEPRESSURIZATION VALVE AND START SAFETY INJECTION PUMP
			RTPCF4ICYRRT7001-ALL	SG WATER LEVEL SENSOR (NARROW RANGE) CCF
5	9.6E-10	3.8	!14LOFF	LOSS OF FEED WATER FLOW
			EFWOO01006AB	(HE) FAIL TO CHANGEOVER EFW PIT
			EFWPTAD001A	EFS-MPP-001A (A-EFW PUMP) FAIL TO START
			HPIOO02FWBD	(HE) FAIL TO OPEN SAFETY DEPRESSURIZATION VALVE AND START SAFETY INJECTION PUMP
			SWSTMPE001B	EWS-MPP-001B (B-ESW PUMP) TEST & MAINTENANCE

Table 19.1-133 LOFF with Reactor Trip Resulting Failure of RCS Depressurization Sequence Dominant Cutsets (Sheet 2 of 5)

Rank	Cutsets Freq. (/RY)	Percent (%)	Cutsets	Basic Event Name
6	8.0E-10	3.2	!14LOFF	LOSS OF FEED WATER FLOW
			EFWOO01006AB	(HE) FAIL TO CHANGEOVER EFW PIT
			EFWPTAD001A	EFS-MPP-001A (A-EFW PUMP) FAIL TO START
			HPIOO02FWBD	(HE) FAIL TO OPEN SAFETY DEPRESSURIZATION VALVE AND START SAFETY INJECTION PUMP
			VCWCHBD001B	VWS-MEQ-001B (B-ESSENTIAL CHILLER UNIT) FAIL TO START
7	7.3E-10	2.9	!14LOFF	LOSS OF FEED WATER FLOW
			EFWOO01006AB	(HE) FAIL TO CHANGEOVER EFW PIT
			EFWTMTA001A	EFS-MPP-001A (A-EFW PUMP) TEST & MAINTENANCE
			HPIOO02FWBD	(HE) FAIL TO OPEN SAFETY DEPRESSURIZATION VALVE AND START SAFETY INJECTION PUMP
			SWSTMPE001B	EWS-MPP-001B (B-ESW PUMP) TEST & MAINTENANCE
8	6.4E-10	2.6	!14LOFF	LOSS OF FEED WATER FLOW
			EFWOO01006AB	(HE) FAIL TO CHANGEOVER EFW PIT
			EFWPTAD001A	EFS-MPP-001A (A-EFW PUMP) FAIL TO START
			HPIOO02FWBD	(HE) FAIL TO OPEN SAFETY DEPRESSURIZATION VALVE AND START SAFETY INJECTION PUMP
			VCWTMPZ001B	VWS-MPP-001B (B-ESSENTIAL CHILLED WATER PUMP) TEST & MAINTENANCE
9	6.1E-10	2.4	!14LOFF	LOSS OF FEED WATER FLOW
			EFWCF4MVFC017-ALL	EFS-MOV-017A,B,C,D FAIL TO CONTROL (CCF)
			HPIOO02FWBD	(HE) FAIL TO OPEN SAFETY DEPRESSURIZATION VALVE AND START SAFETY INJECTION PUMP

Table 19.1-133 LOFF with Reactor Trip Resulting Failure of RCS Depressurization Sequence Dominant Cutsets (Sheet 3 of 5)

Rank	Cutsets Freq. (/RY)	Percent (%)	Cutsets	Basic Event Name
10	6.1E-10	2.4	!14LOFF	LOSS OF FEED WATER FLOW
			EFWOO01006AB	(HE) FAIL TO CHANGEOVER EFW PIT
			EFWTMTA001A	EFS-MPP-001A (A-EFW PUMP) TEST & MAINTENANCE
			HPIOO02FWBD	(HE) FAIL TO OPEN SAFETY DEPRESSURIZATION VALVE AND START SAFETY INJECTION PUMP
			VCWCHBD001B	VWS-MEQ-001B (B-ESSENTIAL CHILLER UNIT) FAIL TO START
11	4.9E-10	2.0	!14LOFF	LOSS OF FEED WATER FLOW
			EFWOO01006AB	(HE) FAIL TO CHANGEOVER EFW PIT
			EFWTMTA001A	EFS-MPP-001A (A-EFW PUMP) TEST & MAINTENANCE
			HPIOO02FWBD	(HE) FAIL TO OPEN SAFETY DEPRESSURIZATION VALVE AND START SAFETY INJECTION PUMP
			VCWTMPZ001B	VWS-MPP-001B (B-ESSENTIAL CHILLED WATER PUMP) TEST & MAINTENANCE
12	3.5E-10	1.4	!14LOFF	LOSS OF FEED WATER FLOW
			EFWOO01006AB	(HE) FAIL TO CHANGEOVER EFW PIT
			EFWPTSR001A	EFS-MPP-001A (A-EFW PUMP) FAIL TO RUN DURING FIRST HOUR OF OPERATION
			HPIOO02FWBD	(HE) FAIL TO OPEN SAFETY DEPRESSURIZATION VALVE AND START SAFETY INJECTION PUMP
			SWSTMPE001B	EWS-MPP-001B (B-ESW PUMP) TEST & MAINTENANCE

Table 19.1-133 LOFF with Reactor Trip Resulting Failure of RCS Depressurization Sequence Dominant Cutsets (Sheet 4 of 5)

Rank	Cutsets Freq. (/RY)	Percent (%)	Cutsets	Basic Event Name
13	3.2E-10	1.3	!14LOFF	LOSS OF FEED WATER FLOW
			EFWOO01006AB	(HE) FAIL TO CHANGEOVER EFW PIT
			EFWPTAD001A	EFS-MPP-001A (A-EFW PUMP) FAIL TO START
			EFWTMPA001B	EFS-MPP-001B (B-EFW PUMP) TEST & MAINTENANCE
			HPIOO02FWBD	(HE) FAIL TO OPEN SAFETY DEPRESSURIZATION VALVE AND START SAFETY INJECTION PUMP
14	3.2E-10	1.3	!14LOFF	LOSS OF FEED WATER FLOW
			EFWOO01006AB	(HE) FAIL TO CHANGEOVER EFW PIT
			EFWPTAD001D	EFS-MPP-001D (D-EFW PUMP) FAIL TO START
			EFWTMPA001C	EFS-MPP-001C (C-EFW PUMP) TEST & MAINTENANCE
			HPIOO02FWBD	(HE) FAIL TO OPEN SAFETY DEPRESSURIZATION VALVE AND START SAFETY INJECTION PUMP
15	2.9E-10	1.2	!14LOFF	LOSS OF FEED WATER FLOW
			EFWOO01006AB	(HE) FAIL TO CHANGEOVER EFW PIT
			EFWPTSR001A	EFS-MPP-001A (A-EFW PUMP) FAIL TO RUN DURING FIRST HOUR OF OPERATION
			HPIOO02FWBD	(HE) FAIL TO OPEN SAFETY DEPRESSURIZATION VALVE AND START SAFETY INJECTION PUMP
			VCWCHBD001B	VWS-MEQ-001B (B-ESSENTIAL CHILLER UNIT) FAIL TO START

Table 19.1-133 LOFF with Reactor Trip Resulting Failure of RCS Depressurization Sequence Dominant Cutsets (Sheet 5 of 5)

Rank	Cutsets Freq. (/RY)	Percent (%)	Cutsets	Basic Event Name
16	2.3E-10	0.9	!14LOFF	LOSS OF FEED WATER FLOW
			EFWOO01006AB	(HE) FAIL TO CHANGEOVER EFW PIT
			EFWPTSR001A	EFS-MPP-001A (A-EFW PUMP) FAIL TO RUN DURING FIRST HOUR OF OPERATION
			HPIOO02FWBD	(HE) FAIL TO OPEN SAFETY DEPRESSURIZATION VALVE AND START SAFETY INJECTION PUMP
			VCWTMPZ001B	VWS-MPP-001B (B-ESSENTIAL CHILLED WATER PUMP) TEST & MAINTENANCE
17	2.3E-10	0.9	!14LOFF	LOSS OF FEED WATER FLOW
			EFWOO01006AB	(HE) FAIL TO CHANGEOVER EFW PIT
			EFWPTLR001A	EFS-MPP-001A (A-EFW PUMP) FAIL TO RUN AFTER FIRST HOUR OF OPERATION
			HPIOO02FWBD	(HE) FAIL TO OPEN SAFETY DEPRESSURIZATION VALVE AND START SAFETY INJECTION PUMP
			SWSTMPE001B	EWS-MPP-001B (B-ESW PUMP) TEST & MAINTENANCE
18	2.0E-10	0.8	!14LOFF	LOSS OF FEED WATER FLOW
			EFWCF4MVFC017-134	EFS-MOV-017B,C,D FAIL TO CONTROL (CCF)
			HPIOO02FWBD	(HE) FAIL TO OPEN SAFETY DEPRESSURIZATION VALVE AND START SAFETY INJECTION PUMP
19	2.0E-10	0.8	!14LOFF	LOSS OF FEED WATER FLOW
			EFWCF4MVFC017-234	EFS-MOV-017A,B,C FAIL TO CONTROL (CCF)
			HPIOO02FWBD	(HE) FAIL TO OPEN SAFETY DEPRESSURIZATION VALVE AND START SAFETY INJECTION PUMP
20	2.0E-10	0.8	!14LOFF	LOSS OF FEED WATER FLOW
			EFWCF4MVFC017-124	EFS-MOV-017A,C,D FAIL TO CONTROL (CCF)
			HPIOO02FWBD	(HE) FAIL TO OPEN SAFETY DEPRESSURIZATION VALVE AND START SAFETY INJECTION PUMP

Table 19.1-134 SLBO with Reactor Trip Resulting Failure of Main Steam Line Isolation Sequence Dominant Cutsets (Sheet 1 of 3)

Rank	Cutsets Freq. (/RY)	Percent (%)	Cutsets	Basic Event Name
1	5.7E-09	23.9	!10SLBO HPIOO01SDVDAS SGNBTSWCCF2	STEAM LINE BREAK DOWNSTREAM MSIV (HE) FAIL TO OPEN SAFETY DEPRESSURIZATION VALVE BY DAS GROUP-2 APPLICATION SOFTWARE CCF
2	4.5E-09	18.9	!10SLBO HPIOO02FWBD-S MSRCF4AVCD515-ALL	STEAM LINE BREAK DOWNSTREAM MSIV (HE) FAIL TO OPEN SAFETY DEPRESSURIZATION VALVE MSS-SMV-515A,B,C,D FAIL TO CLOSE (CCF)
3	1.3E-09	5.6	!10SLBO HPIOO02FWBD-S MSRCF4AVCD515-12	STEAM LINE BREAK DOWNSTREAM MSIV (HE) FAIL TO OPEN SAFETY DEPRESSURIZATION VALVE MSS-SMV-515B,C FAIL TO CLOSE (CCF)
4	1.3E-09	5.6	!10SLBO HPIOO02FWBD-S MSRCF4AVCD515-13	STEAM LINE BREAK DOWNSTREAM MSIV (HE) FAIL TO OPEN SAFETY DEPRESSURIZATION VALVE MSS-SMV-515A,C FAIL TO CLOSE (CCF)
5	1.3E-09	5.6	!10SLBO HPIOO02FWBD-S MSRCF4AVCD515-23	STEAM LINE BREAK DOWNSTREAM MSIV (HE) FAIL TO OPEN SAFETY DEPRESSURIZATION VALVE MSS-SMV-515B,C FAIL TO CLOSE (CCF)
6	1.3E-09	5.6	!10SLBO HPIOO02FWBD-S MSRCF4AVCD515-24	STEAM LINE BREAK DOWNSTREAM MSIV (HE) FAIL TO OPEN SAFETY DEPRESSURIZATION VALVE MSS-SMV-515B,D FAIL TO CLOSE (CCF)
7	1.3E-09	5.6	!10SLBO HPIOO02FWBD-S MSRCF4AVCD515-34	STEAM LINE BREAK DOWNSTREAM MSIV (HE) FAIL TO OPEN SAFETY DEPRESSURIZATION VALVE MSS-SMV-515A,D FAIL TO CLOSE (CCF)
8	1.3E-09	5.6	!10SLBO HPIOO02FWBD-S MSRCF4AVCD515-14	STEAM LINE BREAK DOWNSTREAM MSIV (HE) FAIL TO OPEN SAFETY DEPRESSURIZATION VALVE MSS-SMV-515C,D FAIL TO CLOSE (CCF)

Table 19.1-134 SLBO with Reactor Trip Resulting Failure of Main Steam Line Isolation Sequence Dominant Cutsets (Sheet 2 of 3)

Rank	Cutsets Freq. (/RY)	Percent (%)	Cutsets	Basic Event Name
9	1.2E-09	5.1	!10SLBO HPIOO01SDVDAS SGNBTHWCCF	STEAM LINE BREAK DOWNSTREAM MSIV (HE) FAIL TO OPEN SAFETY DEPRESSURIZATION VALVE BY DAS DIGITAL I&C HARDWARE CCF
10	6.7E-10	2.8	!10SLBO HPIOO02FWBD-S MSRCF4AVCD515-124	STEAM LINE BREAK DOWNSTREAM MSIV (HE) FAIL TO OPEN SAFETY DEPRESSURIZATION VALVE MSS-SMV-515B,C,D FAIL TO CLOSE (CCF)
11	6.7E-10	2.8	!10SLBO HPIOO02FWBD-S MSRCF4AVCD515-234	STEAM LINE BREAK DOWNSTREAM MSIV (HE) FAIL TO OPEN SAFETY DEPRESSURIZATION VALVE MSS-SMV-515A,B,D FAIL TO CLOSE (CCF)
12	6.7E-10	2.8	!10SLBO HPIOO02FWBD-S MSRCF4AVCD515-134	STEAM LINE BREAK DOWNSTREAM MSIV (HE) FAIL TO OPEN SAFETY DEPRESSURIZATION VALVE MSS-SMV-515A,C,D FAIL TO CLOSE (CCF)
13	6.7E-10	2.8	!10SLBO HPIOO02FWBD-S MSRCF4AVCD515-123	STEAM LINE BREAK DOWNSTREAM MSIV (HE) FAIL TO OPEN SAFETY DEPRESSURIZATION VALVE MSS-SMV-515A,B,C FAIL TO CLOSE (CCF)
14	2.6E-10	1.1	!10SLBO HPIOO02FWBD-S SGNBTSWCCF2	STEAM LINE BREAK DOWNSTREAM MSIV (HE) FAIL TO OPEN SAFETY DEPRESSURIZATION VALVE GROUP-2 APPLICATION SOFTWARE CCF
15	2.2E-10	0.93	!10SLBO MSRCF4AVCD515-ALL PZRCF2MVOD117-ALL	STEAM LINE BREAK DOWNSTREAM MSIV MSS-SMV-515A,B,C,D FAIL TO CLOSE (CCF) RCS-MOV-117A,B FAIL TO OPEN (CCF)
16	6.6E-11	0.27	!10SLBO MSRCF4AVCD515-13 PZRCF2MVOD117-ALL	STEAM LINE BREAK DOWNSTREAM MSIV MSS-SMV-515A,C FAIL TO CLOSE (CCF) RCS-MOV-117A,B FAIL TO OPEN (CCF)

Table 19.1-134 SLBO with Reactor Trip Resulting Failure of Main Steam Line Isolation Sequence Dominant Cutsets (Sheet 3 of 3)

Rank	Cutsets Freq. (/RY)	Percent (%)	Cutsets	Basic Event Name
17	6.6E-11	0.27	!10SLBO MSRCF4AVCD515-34 PZRCF2MVOD117-ALL	STEAM LINE BREAK DOWNSTREAM MSIV MSS-SMV-515A,D FAIL TO CLOSE (CCF) RCS-MOV-117A,B FAIL TO OPEN (CCF)
18	6.6E-11	0.27	!10SLBO MSRCF4AVCD515-23 PZRCF2MVOD117-ALL	STEAM LINE BREAK DOWNSTREAM MSIV MSS-SMV-515B,C FAIL TO CLOSE (CCF) RCS-MOV-117A,B FAIL TO OPEN (CCF)
19	6.6E-11	0.27	!10SLBO MSRCF4AVCD515-12 PZRCF2MVOD117-ALL	STEAM LINE BREAK DOWNSTREAM MSIV MSS-SMV-515B,C FAIL TO CLOSE (CCF) RCS-MOV-117A,B FAIL TO OPEN (CCF)
20	6.6E-11	0.27	!10SLBO MSRCF4AVCD515-14 PZRCF2MVOD117-ALL	STEAM LINE BREAK DOWNSTREAM MSIV MSS-SMV-515C,D FAIL TO CLOSE (CCF) RCS-MOV-117A,B FAIL TO OPEN (CCF)

Table 19.1-135 ATWS without Turbine Trip Sequence Dominant Cutsets (Sheet 1 of 4)

Rank	Cutsets Freq. (/RY)	Percent (%)	Cutsets	Basic Event Name
1	2.1E-08	90.3	!20ATWS	ANTICIPATED TRANSIENT
			RTPDASF	DAS FAILURE
			SGNBTHWCCF	DIGITAL I&C HARDWARE CCF
2	1.0E-09	4.2	!20ATWS	ANTICIPATED TRANSIENT
			RTPBTSWCCF	BASIC SOFTWARE CCF
			RTPDASF	DAS FAILURE
3	1.0E-09	4.2	!20ATWS	ANTICIPATED TRANSIENT
			RTPCRDF	ROD INJECTION FAILURE (4< RODS)
			TTPTSVF	TURBINE STOP VALVE FAILURE
4	2.4E-10	1.0	!20ATWS	ANTICIPATED TRANSIENT
			RTPCF4AXFFRT-ALL	REACTOR TRIP BREAKER A1,A2,B1,B2,C1,C2,D1,D2 (CCF)
			RTPDASF	DAS FAILURE
			TTPTSVF	TURBINE STOP VALVE FAILURE
5	1.5E-12	0.01	!20ATWS	ANTICIPATED TRANSIENT
			RTPCF4ICVRRT6001-ALL	PRESSURIZER PRESSURE SENSOR CCF
			RTPCF4ICYRRT7001-ALL	SG WATER LEVEL SENSOR (NARROW RANGE) CCF
6	10.0E-12	0.00	!20ATWS	ANTICIPATED TRANSIENT
			RTPDASF	DAS FAILURE
			SGNBTSWCCF1	GROUP-1 APPLICATION SOFTWARE CCF
			SGNBTSWCCF2	GROUP-2 APPLICATION SOFTWARE CCF
7	5.0E-13	0.00	!20ATWS	ANTICIPATED TRANSIENT
			RTPCF4ICVRRT6001-134	PRESSURIZER PRESSURE SENSOR 6001 A,B,C CCF
			RTPCF4ICYRRT7001-ALL	SG WATER LEVEL SENSOR (NARROW RANGE) CCF

Table 19.1-135 ATWS without Turbine Trip Sequence Dominant Cutsets (Sheet 2 of 4)

Rank	Cutsets Freq. (/RY)	Percent (%)	Cutsets	Basic Event Name
8	5.0E-13	0.00	!20ATWS	ANTICIPATED TRANSIENT
			RTPCF4ICVRRT6001-123	PRESSURIZER PRESSURE SENSOR 6001 B,C,D CCF
			RTPCF4ICYRRT7001-ALL	SG WATER LEVEL SENSOR (NARROW RANGE) CCF
9	5.0E-13	0.00	!20ATWS	ANTICIPATED TRANSIENT
			RTPCF4ICVRRT6001-124	PRESSURIZER PRESSURE SENSOR 6001 A,C,D CCF
			RTPCF4ICYRRT7001-ALL	SG WATER LEVEL SENSOR (NARROW RANGE) CCF
10	5.0E-13	0.00	!20ATWS	ANTICIPATED TRANSIENT
			RTPCF4ICVRRT6001-234	PRESSURIZER PRESSURE SENSOR 6001 A,B,D CCF
			RTPCF4ICYRRT7001-ALL	SG WATER LEVEL SENSOR (NARROW RANGE) CCF
11	1.4E-13	0.00	!20ATWS	ANTICIPATED TRANSIENT
			RTPCF4ICYRRT7001-ALL	SG WATER LEVEL SENSOR (NARROW RANGE) CCF
			RTPDASF	DAS FAILURE
			SGNBTSWCCF2	GROUP-2 APPLICATION SOFTWARE CCF
12	1.1E-13	0.00	!20ATWS	ANTICIPATED TRANSIENT
			RTPCF4ICVRRT6001-ALL	PRESSURIZER PRESSURE SENSOR CCF
			RTPDASF	DAS FAILURE
			SGNBTSWCCF1	GROUP-1 APPLICATION SOFTWARE CCF
13	3.7E-14	0.00	!20ATWS	ANTICIPATED TRANSIENT
			RTPCF4ICVRRT6001-234	PRESSURIZER PRESSURE SENSOR 6001 A,B,D CCF
			RTPDASF	DAS FAILURE
			SGNBTSWCCF1	GROUP-1 APPLICATION SOFTWARE CCF
14	3.7E-14	0.00	!20ATWS	ANTICIPATED TRANSIENT
			RTPCF4ICVRRT6001-123	PRESSURIZER PRESSURE SENSOR 6001 B,C,D CCF
			RTPDASF	DAS FAILURE
			SGNBTSWCCF1	GROUP-1 APPLICATION SOFTWARE CCF

Table 19.1-135 ATWS without Turbine Trip Sequence Dominant Cutsets (Sheet 3 of 4)

Rank	Cutsets Freq. (/RY)	Percent (%)	Cutsets	Basic Event Name
15	3.7E-14	0.00	!20ATWS	ANTICIPATED TRANSIENT
			RTPCF4ICVRRT6001-124	PRESSURIZER PRESSURE SENSOR 6001 A,C,D CCF
			RTPDASF	DAS FAILURE
			SGNBTSWCCF1	GROUP-1 APPLICATION SOFTWARE CCF
16	3.7E-14	0.00	!20ATWS	ANTICIPATED TRANSIENT
			RTPCF4ICVRRT6001-134	PRESSURIZER PRESSURE SENSOR 6001 A,B,C CCF
			RTPDASF	DAS FAILURE
			SGNBTSWCCF1	GROUP-1 APPLICATION SOFTWARE CCF
17	3.3E-14	0.00	!20ATWS	ANTICIPATED TRANSIENT
			RTPDASF	DAS FAILURE
			RTPNWIFRT5001A1	RPS-A GROUP-1 NETWORK I/F CARD FOR UNIT BUS RT5001A1 FAILURE
			RTPNWIFRT5001D1	RPS-D GROUP-1 NETWORK I/F CARD FOR UNIT BUS RT5001D1 FAILURE
			RTPTMSPRT7001C	A-SG WATER LEVEL SENSOR (NARROW RANGE) RT7001C BYPASS FOR REPAIRS
			SGNBTSWCCF2	GROUP-2 APPLICATION SOFTWARE CCF
18	3.3E-14	0.00	!20ATWS	ANTICIPATED TRANSIENT
			RTPDASF	DAS FAILURE
			RTPNWIFRT5002B1	RPS-B GROUP-1 NETWORK I/F CARD FOR SAFETY BUS RT5002B1 FAILURE
			RTPNWIFRT5002D1	RPS-D GROUP-1 NETWORK I/F CARD FOR SAFETY BUS RT5002D1 FAILURE
			RTPTMSPRT7001A	A-SG WATER LEVEL SENSOR (NARROW RANGE) RT7001A BYPASS FOR REPAIRS
			SGNBTSWCCF2	GROUP-2 APPLICATION SOFTWARE CCF

Table 19.1-135 ATWS without Turbine Trip Sequence Dominant Cutsets (Sheet 4 of 4)

Rank	Cutsets Freq. (/RY)	Percent (%)	Cutsets	Basic Event Name
19	3.3E-14	0.00	!20ATWS	ANTICIPATED TRANSIENT
			RTPDASF	DAS FAILURE
			RTPNWIFRT5002C1	RPS-C GROUP-1 NETWORK I/F CARD FOR SAFETY BUS RT5002C1 FAILURE
			RTPNWIFRT5002D1	RPS-D GROUP-1 NETWORK I/F CARD FOR SAFETY BUS RT5002D1 FAILURE
			RTPTMSPRT7001A	A-SG WATER LEVEL SENSOR (NARROW RANGE) RT7001A BYPASS FOR REPAIRS
			SGNBTSWCCF2	GROUP-2 APPLICATION SOFTWARE CCF
20	3.3E-14	0.00	!20ATWS	ANTICIPATED TRANSIENT
			RTPDASF	DAS FAILURE
			RTPNWIFRT5001B1	RPS-B GROUP-1 NETWORK I/F CARD FOR UNIT BUS RT5001B1 FAILURE
			RTPNWIFRT5002C1	RPS-C GROUP-1 NETWORK I/F CARD FOR SAFETY BUS RT5002C1 FAILURE
			RTPTMSPRT7001A	A-SG WATER LEVEL SENSOR (NARROW RANGE) RT7001A BYPASS FOR REPAIRS
			SGNBTSWCCF2	GROUP-2 APPLICATION SOFTWARE CCF

Table 19.1-136 TRANS with Reactor Trip Resulting Failure of RCS Depressurization Sequence Dominant Cutsets (Sheet 1 of 5)

Rank	Cutsets Freq. (/RY)	Percent (%)	Cutsets	Basic Event Name
1	7.2E-10	4.1	!13TRANS	GENERAL TRANSIENT
			EFWCF2CVOD008-ALL	EFS-VLV-008A,B FAIL TO OPEN (CCF)
			HPIOO02FWBD	(HE) FAIL TO OPEN SAFETY DEPRESSURIZATION VALVE AND START SAFETY INJECTION PUMP
			MFWHARD	MFW SYSTEM FAILURE
2	5.0E-10	2.9	!13TRANS	GENERAL TRANSIENT
			EFWCF4CVOD012-ALL	EFS-VLV-012A,B,C,D FAIL TO OPEN (CCF)
			HPIOO02FWBD	(HE) FAIL TO OPEN SAFETY DEPRESSURIZATION VALVE AND START SAFETY INJECTION PUMP
			MFWHARD	MFW SYSTEM FAILURE
3	5.0E-10	2.9	!13TRANS	GENERAL TRANSIENT
			EFWCF4CVOD018-ALL	EFS-VLV-018A,B,C,D FAIL TO OPEN (CCF)
			HPIOO02FWBD	(HE) FAIL TO OPEN SAFETY DEPRESSURIZATION VALVE AND START SAFETY INJECTION PUMP
			MFWHARD	MFW SYSTEM FAILURE
4	4.1E-10	2.4	!13TRANS	GENERAL TRANSIENT
			HPIOO02FWBD	(HE) FAIL TO OPEN SAFETY DEPRESSURIZATION VALVE AND START SAFETY INJECTION PUMP
			MFWHARD	MFW SYSTEM FAILURE
			RTPCF4ICYRRT7001-ALL	SG WATER LEVEL SENSOR (NARROW RANGE) CCF

Table 19.1-136 TRANS with Reactor Trip Resulting Failure of RCS Depressurization Sequence Dominant Cutsets (Sheet 2 of 5)

Rank	Cutsets Freq. (/RY)	Percent (%)	Cutsets	Basic Event Name
5	4.0E-10	2.3	!13TRANS	GENERAL TRANSIENT
			EFWOO01006AB	(HE) FAIL TO CHANGEOVER EFW PIT
			EFWPTAD001A	EFS-MPP-001A (A-EFW PUMP) FAIL TO START
			HPIOO02FWBD	(HE) FAIL TO OPEN SAFETY DEPRESSURIZATION VALVE AND START SAFETY INJECTION PUMP
			MFWHARD	MFW SYSTEM FAILURE
			SWSTMPE001B	EWS-MPP-001B (B-ESW PUMP) TEST & MAINTENANCE
6	3.9E-10	2.2	!13TRANS	GENERAL TRANSIENT
			EFWCF2CVOD008-ALL	EFS-VLV-008A,B FAIL TO OPEN (CCF)
			HPIOO02FWBD-DP2	(HE) FAIL TO OPEN SAFETY DEPRESSURIZATION VALVE AND START SAFETY INJECTION PUMP
			MFWOO02R	(HE) FAIL TO RECOVER MFWS
7	3.4E-10	1.9	!13TRANS	GENERAL TRANSIENT
			EFWOO01006AB	(HE) FAIL TO CHANGEOVER EFW PIT
			EFWPTAD001A	EFS-MPP-001A (A-EFW PUMP) FAIL TO START
			HPIOO02FWBD	(HE) FAIL TO OPEN SAFETY DEPRESSURIZATION VALVE AND START SAFETY INJECTION PUMP
			MFWHARD	MFW SYSTEM FAILURE
			VCWCHBD001B	VWS-MEQ-001B (B-ESSENTIAL CHILLER UNIT) FAIL TO START
8	3.1E-10	1.8	!13TRANS	GENERAL TRANSIENT
			EFWOO01006AB	(HE) FAIL TO CHANGEOVER EFW PIT
			EFWTMTA001A	EFS-MPP-001A (A-EFW PUMP) TEST & MAINTENANCE
			HPIOO02FWBD	(HE) FAIL TO OPEN SAFETY DEPRESSURIZATION VALVE AND START SAFETY INJECTION PUMP
			MFWHARD	MFW SYSTEM FAILURE
			SWSTMPE001B	EWS-MPP-001B (B-ESW PUMP) TEST & MAINTENANCE

Table 19.1-136 TRANS with Reactor Trip Resulting Failure of RCS Depressurization Sequence Dominant Cutsets (Sheet 3 of 5)

Rank	Cutsets Freq. (/RY)	Percent (%)	Cutsets	Basic Event Name
9	2.7E-10	1.6	!13TRANS	GENERAL TRANSIENT
			EFWCF4CVOD012-ALL	EFS-VLV-012A,B,C,D FAIL TO OPEN (CCF)
			HPIOO02FWBD-DP2	(HE) FAIL TO OPEN SAFETY DEPRESSURIZATION VALVE AND START SAFETY INJECTION PUMP
			MFWOO02R	(HE) FAIL TO RECOVER MFWS
10	2.7E-10	1.6	!13TRANS	GENERAL TRANSIENT
			EFWCF4CVOD018-ALL	EFS-VLV-018A,B,C,D FAIL TO OPEN (CCF)
			HPIOO02FWBD-DP2	(HE) FAIL TO OPEN SAFETY DEPRESSURIZATION VALVE AND START SAFETY INJECTION PUMP
			MFWOO02R	(HE) FAIL TO RECOVER MFWS
11	2.7E-10	1.5	!13TRANS	GENERAL TRANSIENT
			EFWOO01006AB	(HE) FAIL TO CHANGEOVER EFW PIT
			EFWPTAD001A	EFS-MPP-001A (A-EFW PUMP) FAIL TO START
			HPIOO02FWBD	(HE) FAIL TO OPEN SAFETY DEPRESSURIZATION VALVE AND START SAFETY INJECTION PUMP
			MFWHARD	MFW SYSTEM FAILURE
			VCWTMPZ001B	VWS-MPP-001B (B-ESSENTIAL CHILLED WATER PUMP) TEST & MAINTENANCE
12	2.6E-10	1.5	!13TRANS	GENERAL TRANSIENT
			EFWCF4MVFC017-ALL	EFS-MOV-017A,B,C,D FAIL TO CONTROL (CCF)
			HPIOO02FWBD	(HE) FAIL TO OPEN SAFETY DEPRESSURIZATION VALVE AND START SAFETY INJECTION PUMP
			MFWHARD	MFW SYSTEM FAILURE

Table 19.1-136 TRANS with Reactor Trip Resulting Failure of RCS Depressurization Sequence Dominant Cutsets (Sheet 4 of 5)

Rank	Cutsets Freq. (/RY)	Percent (%)	Cutsets	Basic Event Name
13	2.6E-10	1.5	!13TRANS	GENERAL TRANSIENT
			EFWOO01006AB	(HE) FAIL TO CHANGEOVER EFW PIT
			EFWTMTA001A	EFS-MPP-001A (A-EFW PUMP) TEST & MAINTENANCE
			HPIOO02FWBD	(HE) FAIL TO OPEN SAFETY DEPRESSURIZATION VALVE AND START SAFETY INJECTION PUMP
			MFWHARD	MFW SYSTEM FAILURE
			VCWCHBD001B	VWS-MEQ-001B (B-ESSENTIAL CHILLER UNIT) FAIL TO START
14	2.2E-10	1.3	!13TRANS	GENERAL TRANSIENT
			HPIOO02FWBD-DP2	(HE) FAIL TO OPEN SAFETY DEPRESSURIZATION VALVE AND START SAFETY INJECTION PUMP
			MFWOO02R	(HE) FAIL TO RECOVER MFWS
			RTPCF4ICYRRT7001-ALL	SG WATER LEVEL SENSOR (NARROW RANGE) CCF
15	2.2E-10	1.2	!13TRANS	GENERAL TRANSIENT
			EFWOO01006AB	(HE) FAIL TO CHANGEOVER EFW PIT
			EFWPTAD001A	EFS-MPP-001A (A-EFW PUMP) FAIL TO START
			HPIOO02FWBD-DP2	(HE) FAIL TO OPEN SAFETY DEPRESSURIZATION VALVE AND START SAFETY INJECTION PUMP
			MFWOO02R	(HE) FAIL TO RECOVER MFWS
			SWSTMPE001B	EWS-MPP-001B (B-ESW PUMP) TEST & MAINTENANCE
16	2.1E-10	1.2	!13TRANS	GENERAL TRANSIENT
			EFWCF2PTAD001AD-ALL	EFS-MPP-001A,D (EFW PUMP) FAIL TO START (CCF)
			SGNBTSWCCF2	GROUP-2 APPLICATION SOFTWARE CCF
			SGNOO01S	(HE) FAIL TO START SAFETY INJECTION PUMP BY DAS

Table 19.1-136 TRANS with Reactor Trip Resulting Failure of RCS Depressurization Sequence Dominant Cutsets (Sheet 5 of 5)

Rank	Cutsets Freq. (/RY)	Percent (%)	Cutsets	Basic Event Name
17	2.1E-10	1.2	!13TRANS	GENERAL TRANSIENT
			EFWCF2PTAD001AD-ALL	EFS-MPP-001A,D (EFW PUMP) FAIL TO START (CCF)
			HPIOO01SDVDAS	(HE) FAIL TO OPEN SAFETY DEPRESSURIZATION VALVE BY DAS
			SGNBTSWCCF2	GROUP-2 APPLICATION SOFTWARE CCF
18	2.1E-10	1.2	!13TRANS	GENERAL TRANSIENT
			EFWOO01006AB	(HE) FAIL TO CHANGEOVER EFW PIT
			EFWTMTA001A	EFS-MPP-001A (A-EFW PUMP) TEST & MAINTENANCE
			HPIOO02FWBD	(HE) FAIL TO OPEN SAFETY DEPRESSURIZATION VALVE AND START SAFETY INJECTION PUMP
			MFWHARD	MFW SYSTEM FAILURE
			VCWTMPZ001B	VWS-MPP-001B (B-ESSENTIAL CHILLED WATER PUMP) TEST & MAINTENANCE
19	1.8E-10	1.0	!13TRANS	GENERAL TRANSIENT
			EFWOO01006AB	(HE) FAIL TO CHANGEOVER EFW PIT
			EFWPTAD001A	EFS-MPP-001A (A-EFW PUMP) FAIL TO START
			HPIOO02FWBD-DP2	(HE) FAIL TO OPEN SAFETY DEPRESSURIZATION VALVE AND START SAFETY INJECTION PUMP
			MFWOO02R	(HE) FAIL TO RECOVER MFWS
			VCWCHBD001B	VWS-MEQ-001B (B-ESSENTIAL CHILLER UNIT) FAIL TO START
20	1.7E-10	0.95	!13TRANS	GENERAL TRANSIENT
			EFWOO01006AB	(HE) FAIL TO CHANGEOVER EFW PIT
			EFWTMTA001A	EFS-MPP-001A (A-EFW PUMP) TEST & MAINTENANCE
			HPIOO02FWBD-DP2	(HE) FAIL TO OPEN SAFETY DEPRESSURIZATION VALVE AND START SAFETY INJECTION PUMP
			MFWOO02R	(HE) FAIL TO RECOVER MFWS
			SWSTMPE001B	EWS-MPP-001B (B-ESW PUMP) TEST & MAINTENANCE

Table 19.1-137 SLOCA with Reactor Trip Resulting Failure of RCS Deprssurization Sequence Dominant Cutsets (Sheet 1 of 3)

Rank	Cutsets Freq. (/RY)	Percent (%)	Cutsets	Basic Event Name
1	1.0E-09	8.4	!03SLOCA	SMALL PIPE BREAK LOCA
			HPICF4PMAD001-ALL	SIS-MPP-001A,B,C,D (SI PUMP) FAIL TO START (CCF)
			MSPOO02STRV	(HE) FAIL TO DEPRESSURIZE RCS BY SECONDARY SIDE COOLING
2	3.3E-10	2.7	!03SLOCA	SMALL PIPE BREAK LOCA
			EPSCF4DLLRGTG-ALL	CLASS-1E GTG A,B,C,D FAIL TO RUN AFTER FIRST HOUR OF OPERATION (CCF)
			EPSDLLRAACB-L2	B-AAC FAIL TO LOAD AND RUN AFTER FIRST HOUR OF OPERATION
			OPSLOOP	CONSEQUENTIAL LOOP GIVEN A REACTOR TRIP
3	2.3E-10	1.9	!03SLOCA	SMALL PIPE BREAK LOCA
			EPSCF4DLLRGTG-ALL	CLASS-1E GTG A,B,C,D FAIL TO RUN AFTER FIRST HOUR OF OPERATION (CCF)
			OPSLOOP	CONSEQUENTIAL LOOP GIVEN A REACTOR TRIP
			SWSTMPE001D	EWS-MPP-001D (D-ESW PUMP) TEST & MAINTENANCE
4	2.3E-10	1.9	!03SLOCA	SMALL PIPE BREAK LOCA
			EPSCF4DLLRGTG-ALL	CLASS-1E GTG A,B,C,D FAIL TO RUN AFTER FIRST HOUR OF OPERATION (CCF)
			EPSTMDGAACB	B-AAC TEST & MAINTENANCE
			OPSLOOP	CONSEQUENTIAL LOOP GIVEN A REACTOR TRIP
5	1.8E-10	1.5	!03SLOCA	SMALL PIPE BREAK LOCA
			EFWCF2PTAD001AD-ALL	EFS-MPP-001A,D (EFW PUMP) FAIL TO START (CCF)
			HPICF4PMAD001-ALL	SIS-MPP-001A,B,C,D (SI PUMP) FAIL TO START (CCF)
6	1.3E-10	1.1	!03SLOCA	SMALL PIPE BREAK LOCA
			CWSTMRC001D	NCS-MHX-001D (D-CCW HX) TEST & MAINTENANCE
			EPSCF4DLLRGTG-ALL	CLASS-1E GTG A,B,C,D FAIL TO RUN AFTER FIRST HOUR OF OPERATION (CCF)
			OPSLOOP	CONSEQUENTIAL LOOP GIVEN A REACTOR TRIP

Table 19.1-137 SLOCA with Reactor Trip Resulting Failure of RCS Deprssurization Sequence Dominant Cutsets (Sheet 2 of 3)

Rank	Cutsets Freq. (/RY)	Percent (%)	Cutsets	Basic Event Name
7	1.1E-10	0.92	!03SLOCA	SMALL PIPE BREAK LOCA
			CWSTMPC001D	NCS-MPP-001D (D-CCW PUMP) TEST & MAINTENANCE
			EPSCF4DLLRGTG-ALL	CLASS-1E GTG A,B,C,D FAIL TO RUN AFTER FIRST HOUR OF OPERATION (CCF)
			OPSLOOP	CONSEQUENTIAL LOOP GIVEN A REACTOR TRIP
8	1.1E-10	0.86	!03SLOCA	SMALL PIPE BREAK LOCA
			EPSCF4CBSO52STL-234	EPS 52/STLB,C,D (BREAKER) SPURIOUS OPEN (CCF)
9	1.1E-10	0.86	!03SLOCA	SMALL PIPE BREAK LOCA
			EPSCF4CBSO52STH-234	EPS 52/STHB,C,D (BREAKER) SPURIOUS OPEN (CCF)
10	1.1E-10	0.86	!03SLOCA	SMALL PIPE BREAK LOCA
			EPSCF4CBSO52LC-123	EPS 52/LCB,C,D (BREAKER) SPURIOUS OPEN (CCF)
11	9.9E-11	0.81	!03SLOCA	SMALL PIPE BREAK LOCA
			EPSCF4DLLRGTG-123	CLASS-1E GTG B,C,D FAIL TO RUN AFTER FIRST HOUR OF OPERATION (CCF)
			EPSOO02RDG	(HE) FAIL TO CONNECT THE ALTERNATE AC POWER SOURCE TO CLASS 1E BUS
			OPSLOOP	CONSEQUENTIAL LOOP GIVEN A REACTOR TRIP
12	9.9E-11	0.81	!03SLOCA	SMALL PIPE BREAK LOCA
			EPSCBFO52UAT-BCD	EPS 52/UATB,C,D (BREAKER) FAIL TO OPEN (CCF)
			OPSLOOP	CONSEQUENTIAL LOOP GIVEN A REACTOR TRIP
13	9.9E-11	0.81	!03SLOCA	SMALL PIPE BREAK LOCA
			EPSCBFO52RAT-BCD	EPS 52/RATB,C,D (BREAKER) FAIL TO OPEN (CCF)
			OPSLOOP	CONSEQUENTIAL LOOP GIVEN A REACTOR TRIP
14	8.9E-11	0.72	!03SLOCA	SMALL PIPE BREAK LOCA
			EPSCF4DLLRGTG-ALL	CLASS-1E GTG A,B,C,D FAIL TO RUN AFTER FIRST HOUR OF OPERATION (CCF)
			EPSDLADAACB	B-AAC FAIL TO START
			OPSLOOP	CONSEQUENTIAL LOOP GIVEN A REACTOR TRIP

Table 19.1-137 SLOCA with Reactor Trip Resulting Failure of RCS Deprssurization Sequence Dominant Cutsets (Sheet 3 of 3)

Rank	Cutsets Freq. (/RY)	Percent (%)	Cutsets	Basic Event Name
15	8.8E-11	0.72	!03SLOCA	SMALL PIPE BREAK LOCA
			EFWCF2PMAD001BC-ALL	EFS-MPP-001B,C (EFW PUMP) FAIL TO START (CCF)
			HPICF4PMAD001-ALL	SIS-MPP-001A,B,C,D (SI PUMP) FAIL TO START (CCF)
16	8.7E-11	0.71	!03SLOCA	SMALL PIPE BREAK LOCA
			HPICF4PMAD001-123	SIS-MPP-001B,C,D (SI PUMP) FAIL TO START (CCF)
			MSPOO02STRV	(HE) FAIL TO DEPRESSURIZE RCS BY SECONDARY SIDE COOLING
17	8.3E-11	0.68	!03SLOCA	SMALL PIPE BREAK LOCA
			EPSCF4DLLRGTG-123	CLASS-1E GTG B,C,D FAIL TO RUN AFTER FIRST HOUR OF OPERATION (CCF)
			EPSDLLRAACB-L2	B-AAC FAIL TO LOAD AND RUN AFTER FIRST HOUR OF OPERATION
			OPSLOOP	CONSEQUENTIAL LOOP GIVEN A REACTOR TRIP
18	8.3E-11	0.68	!03SLOCA	SMALL PIPE BREAK LOCA
			SWSCF2PMBD001BD-ALL	EWS-MPP-001B,D (ESW PUMP) FAIL TO START (CCF)
			SWSSTPRST001C	EWS-SST-001C (STRAINER) PLUG
19	7.8E-11	0.64	!03SLOCA	SMALL PIPE BREAK LOCA
			HPICF4PMSR001-ALL	SIS-MPP-001A,B,C,D (SI PUMP) FAIL TO RUN DURING FIRST HOUR OF OPERATION (CCF)
			MSPOO02STRV	(HE) FAIL TO DEPRESSURIZE RCS BY SECONDARY SIDE COOLING
20	7.5E-11	0.62	!03SLOCA	SMALL PIPE BREAK LOCA
			EPSCF4DLLRGTG-ALL	CLASS-1E GTG A,B,C,D FAIL TO RUN AFTER FIRST HOUR OF OPERATION (CCF)
			HPITMPI001D	SIS-MPP-001D (D-SI PUMP) TEST & MAINTENANCE
			OPSLOOP	CONSEQUENTIAL LOOP GIVEN A REACTOR TRIP

Table 19.1-138 ATWS without Loss of Decay Heat via SGs Sequence Dominant Cutsets (Sheet 1 of 3)

Rank	Cutsets Freq. (/RY)	Percent (%)	Cutsets	Basic Event Name
1	1.2E-09	10.0	!20ATWS	ANTICIPATED TRANSIENT
			RTPCRDF	ROD INJECTION FAILURE (4< RODS)
			SWSTMPE001B	EWS-MPP-001B (B-ESW PUMP) TEST & MAINTENANCE
2	1.0E-09	8.3	!20ATWS	ANTICIPATED TRANSIENT
			RTPCRDF	ROD INJECTION FAILURE (4< RODS)
			VCWCHBD001B	VWS-MEQ-001B (B-ESSENTIAL CHILLER UNIT) FAIL TO START
3	8.0E-10	6.7	!20ATWS	ANTICIPATED TRANSIENT
			RTPCRDF	ROD INJECTION FAILURE (4< RODS)
			VCWTMPZ001B	VWS-MPP-001B (B-ESSENTIAL CHILLED WATER PUMP) TEST & MAINTENANCE
4	6.5E-10	5.5	!20ATWS	ANTICIPATED TRANSIENT
			EFWPTAD001A	EFS-MPP-001A (A-EFW PUMP) FAIL TO START
			RTPCRDF	ROD INJECTION FAILURE (4< RODS)
5	6.5E-10	5.5	!20ATWS	ANTICIPATED TRANSIENT
			EFWPTAD001D	EFS-MPP-001D (D-EFW PUMP) FAIL TO START
			RTPCRDF	ROD INJECTION FAILURE (4< RODS)
6	5.0E-10	4.2	!20ATWS	ANTICIPATED TRANSIENT
			EFWTMTA001D	EFS-MPP-001D (D-EFW PUMP) TEST & MAINTENANCE
			RTPCRDF	ROD INJECTION FAILURE (4< RODS)
7	5.0E-10	4.2	!20ATWS	ANTICIPATED TRANSIENT
			EFWTMTA001A	EFS-MPP-001A (A-EFW PUMP) TEST & MAINTENANCE
			RTPCRDF	ROD INJECTION FAILURE (4< RODS)
8	4.0E-10	3.3	!20ATWS	ANTICIPATED TRANSIENT
			EFWTMPA001C	EFS-MPP-001C (C-EFW PUMP) TEST & MAINTENANCE
			RTPCRDF	ROD INJECTION FAILURE (4< RODS)

Table 19.1-138 ATWS without Loss of Decay Heat via SGs Sequence Dominant Cutsets (Sheet 2 of 3)

Rank	Cutsets Freq. (/RY)	Percent (%)	Cutsets	Basic Event Name
9	4.0E-10	3.3	!20ATWS	ANTICIPATED TRANSIENT
			EFWTMPA001B	EFS-MPP-001B (B-EFW PUMP) TEST & MAINTENANCE
			RTPCRDF	ROD INJECTION FAILURE (4< RODS)
10	2.8E-10	2.4	!20ATWS	ANTICIPATED TRANSIENT
			RTPCF4AXFFRT-ALL	REACTOR TRIP BREAKER A1,A2,B1,B2,C1,C2,D1,D2 (CCF)
			RTPDASF	DAS FAILURE
			SWSTMPE001B	EWS-MPP-001B (B-ESW PUMP) TEST & MAINTENANCE
11	2.5E-10	2.1	!20ATWS	ANTICIPATED TRANSIENT
			HVATMAH401B	VRS-MAH-401B (B-EFW PUMP AIR HANDLING UNIT) TEST & MAINTENANCE
			RTPCRDF	ROD INJECTION FAILURE (4< RODS)
12	2.5E-10	2.1	!20ATWS	ANTICIPATED TRANSIENT
			HVATMAH401C	VRS-MAH-401C (C-EFW PUMP AIR HANDLING UNIT) TEST & MAINTENANCE
			RTPCRDF	ROD INJECTION FAILURE (4< RODS)
13	2.4E-10	2.0	!20ATWS	ANTICIPATED TRANSIENT
			EFWPTSR001A	EFS-MPP-001A (A-EFW PUMP) FAIL TO RUN DURING FIRST HOUR OF OPERATION
			RTPCRDF	ROD INJECTION FAILURE (4< RODS)
14	2.4E-10	2.0	!20ATWS	ANTICIPATED TRANSIENT
			EFWPTSR001D	EFS-MPP-001D (D-EFW PUMP) FAIL TO RUN DURING FIRST HOUR OF OPERATION
			RTPCRDF	ROD INJECTION FAILURE (4< RODS)
15	2.4E-10	2.0	!20ATWS	ANTICIPATED TRANSIENT
			HVAAHSR401B	VRS-MAH-401B (B-EFW PUMP AIR HANDLING UNIT) FAIL TO RUN DURING FIRST HOUR OF OPERATION
			RTPCRDF	ROD INJECTION FAILURE (4< RODS)

Table 19.1-138 ATWS without Loss of Decay Heat via SGs Sequence Dominant Cutsets (Sheet 3 of 3)

Rank	Cutsets Freq. (/RY)	Percent (%)	Cutsets	Basic Event Name
16	2.4E-10	2.0	!20ATWS	ANTICIPATED TRANSIENT
			HVAAHSR401C	VRS-MAH-401C (C-EFW PUMP AIR HANDLING UNIT) FAIL TO RUN DURING FIRST HOUR OF OPERATION
			RTPCRDF	ROD INJECTION FAILURE (4< RODS)
17	2.4E-10	2.0	!20ATWS	ANTICIPATED TRANSIENT
			RTPCF4AXFFRT-ALL	REACTOR TRIP BREAKER A1,A2,B1,B2,C1,C2,D1,D2 (CCF)
			RTPDASF	DAS FAILURE
			VCWCHBD001B	VWS-MEQ-001B (B-ESSENTIAL CHILLER UNIT) FAIL TO START
18	2.1E-10	1.7	!20ATWS	ANTICIPATED TRANSIENT
			RTPCRDF	ROD INJECTION FAILURE (4< RODS)
			VCWCHYR001C	VWS-MEQ-001C (C-ESSENTIAL CHILLER UNIT) FAIL TO RUN
19	2.1E-10	1.7	!20ATWS	ANTICIPATED TRANSIENT
			RTPCRDF	ROD INJECTION FAILURE (4< RODS)
			VCWCHYR001B	VWS-MEQ-001B (B-ESSENTIAL CHILLER UNIT) FAIL TO RUN
20	2.0E-10	1.7	!20ATWS	ANTICIPATED TRANSIENT
			RTPCRDF	ROD INJECTION FAILURE (4< RODS)
			VCWPMBD001B	VWS-MPP-001B (B-ESSENTIAL CHILLED WATER PUMP) FAIL TO START

Table 19.1-139 LOOP with Reactor Trip Failure of RCS Depressurization Sequence Dominant Cutsets (Sheet 1 of 5)

Rank	Cutsets Freq. (/RY)	Percent (%)	Cutsets	Basic Event Name
1	3.6E-10	3.2	!19LOOP	LOSS OF OFFSITE POWER
			EFWCF2CVOD008-ALL	EFS-VLV-008A,B FAIL TO OPEN (CCF)
			HPIOO02FWBD	(HE) FAIL TO OPEN SAFETY DEPRESSURIZATION VALVE AND START SAFETY INJECTION PUMP
2	2.8E-10	2.5	!19LOOP	LOSS OF OFFSITE POWER
			EFWOO01006AB	(HE) FAIL TO CHANGEOVER EFW PIT
			EFWPTAD001D	EFS-MPP-001D (D-EFW PUMP) FAIL TO START
			EPSDLLREGTGC	C-CLASS 1E GTG FAIL TO LOAD AND RUN AFTER FIRST HOUR OF OPERATION
			HPIOO02FWBD	(HE) FAIL TO OPEN SAFETY DEPRESSURIZATION VALVE AND START SAFETY INJECTION PUMP
3	2.8E-10	2.5	!19LOOP	LOSS OF OFFSITE POWER
			EFWOO01006AB	(HE) FAIL TO CHANGEOVER EFW PIT
			EFWPTAD001A	EFS-MPP-001A (A-EFW PUMP) FAIL TO START
			EPSDLLREGTGB	B-CLASS 1E GTG FAIL TO LOAD AND RUN AFTER FIRST HOUR OF OPERATION
			HPIOO02FWBD	(HE) FAIL TO OPEN SAFETY DEPRESSURIZATION VALVE AND START SAFETY INJECTION PUMP
4	2.5E-10	2.2	!19LOOP	LOSS OF OFFSITE POWER
			EFWCF4CVOD018-ALL	EFS-VLV-018A,B,C,D FAIL TO OPEN (CCF)
			HPIOO02FWBD	(HE) FAIL TO OPEN SAFETY DEPRESSURIZATION VALVE AND START SAFETY INJECTION PUMP
5	2.5E-10	2.2	!19LOOP	LOSS OF OFFSITE POWER
			EFWCF4CVOD012-ALL	EFS-VLV-012A,B,C,D FAIL TO OPEN (CCF)
			HPIOO02FWBD	(HE) FAIL TO OPEN SAFETY DEPRESSURIZATION VALVE AND START SAFETY INJECTION PUMP

Table 19.1-139 LOOP with Reactor Trip Failure of RCS Depressurization Sequence Dominant Cutsets (Sheet 2 of 5)

Rank	Cutsets Freq. (/RY)	Percent (%)	Cutsets	Basic Event Name
6	2.1E-10	1.9	!19LOOP	LOSS OF OFFSITE POWER
			EFWOO01006AB	(HE) FAIL TO CHANGEOVER EFW PIT
			EFWTMTA001A	EFS-MPP-001A (A-EFW PUMP) TEST & MAINTENANCE
			EPSDLLREGTGB	B-CLASS 1E GTG FAIL TO LOAD AND RUN AFTER FIRST HOUR OF OPERATION
			HPIOO02FWBD	(HE) FAIL TO OPEN SAFETY DEPRESSURIZATION VALVE AND START SAFETY INJECTION PUMP
7	2.1E-10	1.9	!19LOOP	LOSS OF OFFSITE POWER
			EFWOO01006AB	(HE) FAIL TO CHANGEOVER EFW PIT
			EFWTMTA001D	EFS-MPP-001D (D-EFW PUMP) TEST & MAINTENANCE
			EPSDLLREGTGC	C-CLASS 1E GTG FAIL TO LOAD AND RUN AFTER FIRST HOUR OF OPERATION
			HPIOO02FWBD	(HE) FAIL TO OPEN SAFETY DEPRESSURIZATION VALVE AND START SAFETY INJECTION PUMP
8	2.1E-10	1.8	!19LOOP	LOSS OF OFFSITE POWER
			HPIOO02FWBD	(HE) FAIL TO OPEN SAFETY DEPRESSURIZATION VALVE AND START SAFETY INJECTION PUMP
			RTPCF4ICYRRT7001-ALL	SG WATER LEVEL SENSOR (NARROW RANGE) CCF
9	2.0E-10	1.8	!19LOOP	LOSS OF OFFSITE POWER
			EFWOO01006AB	(HE) FAIL TO CHANGEOVER EFW PIT
			EFWPTAD001A	EFS-MPP-001A (A-EFW PUMP) FAIL TO START
			HPIOO02FWBD	(HE) FAIL TO OPEN SAFETY DEPRESSURIZATION VALVE AND START SAFETY INJECTION PUMP
			SWSTMPE001B	EWS-MPP-001B (B-ESW PUMP) TEST & MAINTENANCE

Table 19.1-139 LOOP with Reactor Trip Failure of RCS Depressurization Sequence Dominant Cutsets (Sheet 3 of 5)

Rank	Cutsets Freq. (/RY)	Percent (%)	Cutsets	Basic Event Name
10	2.0E-10	1.8	!19LOOP	LOSS OF OFFSITE POWER
			EFWOO01006AB	(HE) FAIL TO CHANGEOVER EFW PIT
			EFWPTAD001D	EFS-MPP-001D (D-EFW PUMP) FAIL TO START
			EPSTMDGEGTGC	C-CLASS 1E GTG TEST & MAINTENANCE
			HPIOO02FWBD	(HE) FAIL TO OPEN SAFETY DEPRESSURIZATION VALVE AND START SAFETY INJECTION PUMP
11	2.0E-10	1.8	!19LOOP	LOSS OF OFFSITE POWER
			EFWOO01006AB	(HE) FAIL TO CHANGEOVER EFW PIT
			EFWPTAD001A	EFS-MPP-001A (A-EFW PUMP) FAIL TO START
			EPSTMDGEGTGB	B-CLASS 1E GTG TEST & MAINTENANCE
			HPIOO02FWBD	(HE) FAIL TO OPEN SAFETY DEPRESSURIZATION VALVE AND START SAFETY INJECTION PUMP
12	1.7E-10	1.5	!19LOOP	LOSS OF OFFSITE POWER
			EFWOO01006AB	(HE) FAIL TO CHANGEOVER EFW PIT
			EFWPTAD001A	EFS-MPP-001A (A-EFW PUMP) FAIL TO START
			HPIOO02FWBD	(HE) FAIL TO OPEN SAFETY DEPRESSURIZATION VALVE AND START SAFETY INJECTION PUMP
			VCWCHBD001B	VWS-MEQ-001B (B-ESSENTIAL CHILLER UNIT) FAIL TO START
13	1.5E-10	1.4	!19LOOP	LOSS OF OFFSITE POWER
			EFWOO01006AB	(HE) FAIL TO CHANGEOVER EFW PIT
			EFWTMTA001A	EFS-MPP-001A (A-EFW PUMP) TEST & MAINTENANCE
			HPIOO02FWBD	(HE) FAIL TO OPEN SAFETY DEPRESSURIZATION VALVE AND START SAFETY INJECTION PUMP
			SWSTMPE001B	EWS-MPP-001B (B-ESW PUMP) TEST & MAINTENANCE

Table 19.1-139 LOOP with Reactor Trip Failure of RCS Depressurization Sequence Dominant Cutsets (Sheet 4 of 5)

Rank	Cutsets Freq. (/RY)	Percent (%)	Cutsets	Basic Event Name
14	1.5E-10	1.4	!19LOOP	LOSS OF OFFSITE POWER
			EFWOO01006AB	(HE) FAIL TO CHANGEOVER EFW PIT
			EFWTMTA001D	EFS-MPP-001D (D-EFW PUMP) TEST & MAINTENANCE
			EPSTMDGEGTGC	C-CLASS 1E GTG TEST & MAINTENANCE
			HPIOO02FWBD	(HE) FAIL TO OPEN SAFETY DEPRESSURIZATION VALVE AND START SAFETY INJECTION PUMP
15	1.5E-10	1.4	!19LOOP	LOSS OF OFFSITE POWER
			EFWOO01006AB	(HE) FAIL TO CHANGEOVER EFW PIT
			EFWTMTA001A	EFS-MPP-001A (A-EFW PUMP) TEST & MAINTENANCE
			EPSTMDGEGTGB	B-CLASS 1E GTG TEST & MAINTENANCE
			HPIOO02FWBD	(HE) FAIL TO OPEN SAFETY DEPRESSURIZATION VALVE AND START SAFETY INJECTION PUMP
16	1.3E-10	1.2	!19LOOP	LOSS OF OFFSITE POWER
			EFWOO01006AB	(HE) FAIL TO CHANGEOVER EFW PIT
			EFWPTAD001A	EFS-MPP-001A (A-EFW PUMP) FAIL TO START
			HPIOO02FWBD	(HE) FAIL TO OPEN SAFETY DEPRESSURIZATION VALVE AND START SAFETY INJECTION PUMP
			VCWTMPZ001B	VWS-MPP-001B (B-ESSENTIAL CHILLED WATER PUMP) TEST & MAINTENANCE
17	1.3E-10	1.1	!19LOOP	LOSS OF OFFSITE POWER
			EFWCF4MVFC017-ALL	EFS-MOV-017A,B,C,D FAIL TO CONTROL (CCF)
			HPIOO02FWBD	(HE) FAIL TO OPEN SAFETY DEPRESSURIZATION VALVE AND START SAFETY INJECTION PUMP

Table 19.1-139 LOOP with Reactor Trip Failure of RCS Depressurization Sequence Dominant Cutsets (Sheet 5 of 5)

Rank	Cutsets Freq. (/RY)	Percent (%)	Cutsets	Basic Event Name
18	1.3E-10	1.1	!19LOOP	LOSS OF OFFSITE POWER
			EFWOO01006AB	(HE) FAIL TO CHANGEOVER EFW PIT
			EFWTMTA001A	EFS-MPP-001A (A-EFW PUMP) TEST & MAINTENANCE
			HPIOO02FWBD	(HE) FAIL TO OPEN SAFETY DEPRESSURIZATION VALVE AND START SAFETY INJECTION PUMP
			VCWCHBD001B	VWS-MEQ-001B (B-ESSENTIAL CHILLER UNIT) FAIL TO START
19	1.0E-10	0.9	!19LOOP	LOSS OF OFFSITE POWER
			EFWOO01006AB	(HE) FAIL TO CHANGEOVER EFW PIT
			EFWTMTA001A	EFS-MPP-001A (A-EFW PUMP) TEST & MAINTENANCE
			HPIOO02FWBD	(HE) FAIL TO OPEN SAFETY DEPRESSURIZATION VALVE AND START SAFETY INJECTION PUMP
			VCWTMPZ001B	VWS-MPP-001B (B-ESSENTIAL CHILLED WATER PUMP) TEST & MAINTENANCE
20	1.0E-10	0.9	!19LOOP	LOSS OF OFFSITE POWER
			EFWOO01006AB	(HE) FAIL TO CHANGEOVER EFW PIT
			EFWPTSR001D	EFS-MPP-001D (D-EFW PUMP) FAIL TO RUN DURING FIRST HOUR OF OPERATION
			EPSDLLREGTGC	C-CLASS 1E GTG FAIL TO LOAD AND RUN AFTER FIRST HOUR OF OPERATION
			HPIOO02FWBD	(HE) FAIL TO OPEN SAFETY DEPRESSURIZATION VALVE AND START SAFETY INJECTION PUMP

Table 19.1-140 Impact on PRA Associated with Key Sources of Uncertainty and Key Assumptions (Level 1 PRA for Internal Events at Power) (Sheet 1 of 3)

Key Sources of Uncertainty and Key Assumptions		Sensitivity Analysis Case	Impact on CDF
Unique Equipment and their Duty to the US-APWR Design	Gas turbine generators	Case 3-2	In the base case, failure data of diesel generators are applied to GTGs. In the sensitivity analysis, the failure data of gas turbine generators are applied and then, the increase of CDF is approximately 30% from the base case. Failure data of GTGs has uncertainty of CDF.
	Digital I&C	Case 4-1, 4-4, 4-5	A tenfold increase in the assumed probability of hardware or application software CCF that causes failure of the digital I&C system and operator actions results in a CDF of approximately 1.3 times the base case value. Also, CCF probability of basic software with ten times the base case results in less than 5% increase of the base case CDF. Uncertainty from CCF of the digital I&C system has impact on the automatic signals and operator actions.
	AAC application software	Case 4-3	I&C system for AACs is designed to be independent from software for safety-related equipment such as Class 1E GTGs. The CDF is 1.5E-06/RY, which is approximately 50% higher than base case. The characteristic design of US-APWR enables to reduce risk during plant operation.
System Analysis	System unavailability due to test and maintenance	Case 1-1, 1-2, 1-3, 1-4	The CDF is 4.4E-06/RY when one safety train is out of service all year. Four train safety systems of US-APWR design enable to reduce risk caused by on line maintenance during at-power operation.

Table 19.1-140 Impact on PRA Associated with Key Sources of Uncertainty and Key Assumptions (Level 1 PRA for Internal Events at Power) (Sheet 2 of 3)

Key Sources of Uncertainty and Key Assumptions		Sensitivity Analysis Case	Impact on CDF
System Analysis	Status of pressurize safety valves	Case 6-1	The increased CDF assuming the RCS pressure does not exceed the pressurizer safety valve set pressure following an initiating event such as LOOP, LOCCW or PLOCW is less than 1% of the base case CDF. Uncertainty from PSVs has impact on risk caused by the LOOP, LOCCW or PLOCW initiating event.
Data Analysis	Test interval	Case 7-1	In the sensitivity analysis with longer test interval for valves, the maximum CDF is 1.2E-06/RY. Most equipment is controlled by US-APWR TS in Chapter 16. Unreliability depends on test interval, which means the interval is one of key uncertainty sources in the PRA.
	Failure probability and failure rates for diesel generators are applied to gas turbine generators.	Case 3-2	In the base case, failure data of diesel generators are applied to GTGs. In the sensitivity analysis, the failure data of gas turbine generators are applied and then, the increase of CDF is approximately 30% from the base case. Failure data of GTGs has uncertainty of CDF.
	Failure probability of digital I&C software	Case 4-1, 4-4, 4-5	A tenfold increase in the assumed probability for hardware or application software CCF which causes the digital I&C system failure and operator action failure results in a CDF of approximately 1.3 times the base case scenario. Also, a tenfold increase in the CCF probability of basic software results in less than 5% of the base case CDF. Thus, the uncertainty from CCF of the digital I&C system has impact on the automatic signals and operator actions.
Common Cause Failure Analysis	CCF parameters of emergency diesel generators are applied to gas turbine generators.	Case 3-1	In base case, CCF parameters for diesel generators are applied to gas turbine generators. In the sensitivity analysis case, the CCF parameters for general components, which is smaller than the diesel generators, are applied. The CDF is 7.8E-07/RY, which is 24% lower than the base case. The results shows the GTGs have impact on uncertainty of CDF.

Table 19.1-140 Impact on PRA Associated with Key Sources of Uncertainty and Key Assumptions (Level 1 PRA for Internal Events at Power) (Sheet 3 of 3)

Key Sources of Uncertainty and Key Assumptions		Sensitivity Analysis Case	Impact on CDF
HRA	Human error probability	Case 2-1, 2-2	When all failure probabilities related to post initiating event action are set to 0.0 and 1.0, the estimated CDFs are 3.9E-07/RY and 1.6E-03/RY, respectively. HEPs have large impact on the uncertainty of CDF.
	Visual Display Unit (VDU) Interaction	Case 2-4	In sensitivity analysis, dependency level between operator actions are higher compared to base case, which assumes the changing window on displays is not effective. The increase of CDF is approximately 2%, which shows the change of the window for operator actions has small impact on the risk during at-power operation because the automatic actuation signal such as ECCS actuation signal is available during plant operation.
	Frequent training of operator actions	Case 2-3	In base case, the lower HEPs are applied to operator actions that have frequent training. In sensitivity analysis, mean HEPs are applied to the operator actions, which is assumed to not perform frequent training. Then, the CDF is 4.6E-06/RY and is 4.5 times higher than the base case CDF.

Table 19.1-141 Summary of Plant Configuration and Operator Activities during Mid-loop Operation (Sheet 1 of 4)

POS			Description	Duration [hr]			RCS Configuration										Effectiveness of	
							RCS Inventory											
							Realistic Operation		PRA Assumption		Supplied or drained by	Possibility of OVDR or FLML	RV Head	Stud Bolt	RCS Vent	Open/Close (RCS Boundary)	SG cooling	Gravity injection
			Plant State	Base Case	Sensitivity Case		From	To	From	To								
POS 4	POS 4-1	A	Mid-loop operation with RHR cooling (from initiation of draining the RCS to removal of the SG manway)	36	24	14	RCS full	Slightly below the MCP top	RCS full	MCP center	Drained by CVCS	Yes (OVDR)	On	Fully tensioned	Pressurizer spray vent valve	Open	Yes[NOTE4]	No
		B				10	Slightly below the MCP top	Slightly below the MCP top	MCP center	MCP center	Not drained but controlled by CVCS SG tube drain performed	Yes (FLML)[NOTE3]	On	Less tensioned	Pressurizer spray vent valve	Open	Yes[NOTE4]	No
	POS 4-2		Mid-loop operation with RHR cooling (from removal of the SG manway to installation of the SG nozzle dam)		12		Slightly below the MCP top	Above the MCP top	MCP center	MCP center	Not drained but controlled by CVCS	Yes (FLML)	On	Less tensioned	SG manways Either at least three PSVs or pressurizer manway	Open	No	Yes
	POS 4-3	A	Mid-loop operation with RHR cooling (from installation of the SG nozzle dam to cavity full)	36	36		Above the MCP top	Above the MCP top	MCP center	MCP center	Not drained but controlled by CVCS	Yes (FLML)	On	Less tensioned	Either at least three PSVs or pressurizer manway	Open	No	No*1
		B					Above the MCP top	Flange level[NOTE1]	MCP center	Flange level[NOTE1]	Supplied by RWR pump	Negligible	On	Less tensioned	Either at least three PSVs or pressurizer manway	Open	No	No*1
		C					Flange level[NOTE1]	Flange level[NOTE1]	Flange level[NOTE1]	Flange level[NOTE1]	Not drained and supplied	Negligible	On	Less tensioned	Either at least three PSVs or pressurizer manway	Open	No	No*1
		D		72			Flange level[NOTE1]	Flange level[NOTE1]	Flange level[NOTE1]	Flange level[NOTE1]	Not drained and supplied	Negligible	Off	No RV head	RV head off	Open	No	No*2
		E					Flange level[NOTE1]	Cavity full	Flange level[NOTE1]	Cavity full	Supplied by CS/RHR pump	Negligible	Off	No RV head	RV head off	Open	No	No*2
POS 5			Fuel offload	72	72		Cavity full	Cavity full	Cavity full	Cavity full	Not drained and supplied	Negligible	Off	No RV head	RV head off	Open	N/A	N/A
POS 6			No fuel or partial offload	168	168		Cavity full	Cavity full	Cavity full	Cavity full	Not drained and supplied	Negligible	Off	No RV head	RV head off	Open	N/A	N/A
POS 7			Fuel load		72		Cavity full	Cavity full	Cavity full	Cavity full	Not drained and supplied	Negligible	Off	No RV head	RV head off	Open	N/A	N/A

NOTE
1: In actually, one-foot below flange level
2: Analysis condition (Decay heat) and results (Time) in MAAP
3: It is considered that Initiating event "OVDR" includes initiating event "FLML".
4. Analysis results assuming the pressurizer vent valve are kept open demonstrate the effectiveness with 20 hours.

Abbreviations
MCP: Main coolant piping
CVCS: Chemical and volume control system
RWR pump: Refueling water recirculation pump
CS/RHR pump: Containment spray/residual heat removal pump
OVDR: Over-drain
FLML: Loss of RHR caused by failing to maintain water level
ICIS: In-core instrumentation system
PSV: Pressurizer safety valve

Table 19.1-141 Summary of Plant Configuration and Operator Activities during Mid-loop Operation (Sheet 2 of 4)

POS			Description	Duration [hr]			RCS Configuration										Effectiveness of	
							RCS Inventory						RV Head	Stud Bolt	RCS Vent	Open/Close (RCS Boundary)	SG cooling	Gravity injection
			Plant State	Base Case	Sensitivity Case		Realistic Operation		PRA Assumption		Supplied or drained by	Possibility of OVDR or FLML						
							From	To	From	To								
POS 8	POS 8-1	A	Mid-loop operation with RHR cooling (from cavity full to removal of the SG nozzle dam)	72	60	8	Cavity full	Flange level[NOTE1]	Cavity full	Flange level[NOTE1]	Drained by CS/RHR pump	Negligible	Off	No RV head	RV head off	Open	No	No[*3]
		B		72			Flange level[NOTE1]	Flange level[NOTE1]	Flange level[NOTE1]	Flange level[NOTE1]	Not drained and supplied	Negligible	Off	No RV head	RV head off	Open	No	No[*3]
		C					Flange level[NOTE1]	Flange level[NOTE1]	Flange level[NOTE1]	Flange level[NOTE1]	Not drained and supplied	Negligible	On	Less tensioned	Either at least three PSVs or pressurizer manway	Open	No	No[*4]
		D					Flange level[NOTE1]	Above the MCP top	Flange level[NOTE1]	MCP center	Drained by CVCS	Yes (OVDR)	On	Less tensioned	Either at least three PSVs or pressurizer manway	Open	No	No[*4]
		E				52	Above the MCP top	Above the MCP top	MCP center	MCP center	Not drained and supplied	Yes (FLML)[NOTE3]	On	Less tensioned	Either at least three PSVs or pressurizer manway	Open	No	No[*4]
	POS 8-2		Mid-loop operation with RHR cooling (from removal of the SG nozzle dam to Installation of the SG manway)		12		Above the MCP top	Slightly below the MCP top	MCP center	MCP center	Not drained and supplied	Yes (FLML)	On	Less tensioned	SG manways Either at least three PSVs or pressurizer manway	Open	No	Yes
	POS 8-3	A	Mid-loop operation with RHR cooling (from installation of the SG manway to RCS full)	24	24		Slightly below the MCP top	Slightly below the MCP top	MCP center	MCP center	Not drained and supplied	Yes (FLML)	On	Fully tensioned	No vent	Close	Yes	No
		B					Slightly below the MCP top	RCS full	MCP center	RCS full	Supplied by CVCS	Negligible	On	Fully tensioned	Pressurizer spray vent valve	Open	Yes[NOTE4]	No

NOTE

1: In actually, one-foot below flange level
2: Analysis condition (Decay heat) and results (Time) in MAAP
3: It is considered that Initiating event "OVDR" includes initiating event "FLML".
4. Analysis results assuming the pressurizer vent valve are kept open demonstrate the effectiveness with 20 hours.

Abbreviations

MCP: Main coolant piping
CVCS: Chemical and volume control system
RWR pump: Refueling water recirculation pump
CS/RHR pump: Containment spray/residual heat removal pump
OVDR: Over-drain
FLML: Loss of RHR caused by failing to maintain water level
ICIS: In-core instrumentation system
PSV: Pressurizer safety valve

Table 19.1-141 Summary of Plant Configuration and Operator Activities during Mid-loop Operation (Sheet 3 of 4)

POS			Performed key activities	Time [hr] After shutdown	Time [hr] To RCS boiling NOTE2	Time [hr] To core uncovery NOTE2 MAAP Results	Time [hr] To core uncovery NOTE2 Considered in PRA	Decay Heat [MW]NOTE2	Remarks
POS 4	POS 4-1	A	Open pressurizer spray vent valve prior to RCS draining. Drain RCS below the top of MCP by the CVCS for SG draining.	36	0.3	13.0	12.0	22.7	SG reflux cooling is available but gravity injection is unavailable because the RCS is higher than atmospheric pressure and there is a pressure boundary in the RCS.
		B	Control RCS inventory by CVCS. Start SG draining. Start to loosen the RV head stud bolts for removal of the RV head and to remove the ICIS from the top of RV head. Open SG manways on hot leg side and then on cold leg side (End of POS 4-1).						
	POS 4-2		Control RCS inventory by the CVCS to keep above a top of MCP. Remove either at least three PSVs or pressurizer manway as an RCS vent path. Continue loosening the RV head stud bolts and removing the ICIS. Install SG nozzle dams on cold leg side and then on hot leg side (End of POS 4-2).	60	0.3	1.7	1.5	19.3	SG reflux cooling is unavailable but gravity injection is available because the RCS pressure is equal to atmospheric pressure due to opening the SG manways. ICIS removal is actually performed at one foot below the RCS flange level, but is conservatively assumed by the PRA to be at the center of MCP.
	POS 4-3	A	Control RCS inventory by the CVCS. Finish to loosen the RV stud bolts.	72	0.3	1.8	1.5	18.1	POS 4-3 conservatively assumes "POS 4-3A" configuration that is the most severe plant configuration in POS 4-3 because neither gravity injection nor SG reflux cooling is available and there is a possibility of FLML in POS 4-3A. *1: Although there is an RCS vent path, gravity injection is unavailable. This is because (1) RCS is pressurized above atmospheric pressure by a loss of RHR, (2) there is a possibility that the primary side is pressurized by the water level of the pressurizer and (3) that there is a pressure loss associated with the RCS vent path. *2: Gravity injection may be available due to removal of the RV head. However, since (1) POS 4-3A is represented as POS 4-3 and (2) water in RWSP, which is the water source for gravity injection, is small (being transfered to cavity) , gravity injection is assumed to be "No".
		B	Supply RCS inventory to one foot below flange level for removal RV head by the RWR pump.						
		C	Finish to removal the ICIS. Start to remove the RV head.						
		D	Start to hoist the RV head for removal.						
		E	Transfer the RV head for fuel offload with supplying RCS inventory to cavity full by the CS/RHR pump.						
POS 5			Fuel offload.	N/A	N/A	N/A	N/A	N/A	This POS is not modeled in the LPSD PRA, because the allowable time is much longer due to the large RCS inventory.
POS 6			Either no fuel in the reactor core or partially offloaded.	N/A	N/A	N/A	N/A	N/A	This POS is not modeled in the LPSD PRA, because there is either no fuel in the reactor or the fuel is partially offloaded.
POS 7			Fuel load.	N/A	N/A	N/A	N/A	N/A	This POS is not modeled in the LPSD PRA, because the allowable time is much longer due to the large RCS inventory.

NOTE
1: In actually, one-foot below flange level
2: Analysis condition (Decay heat) and results (Time) in MAAP
3: It is considered that Initiating event “OVDR” includes initiating event “FLML”.
4. Analysis results assuming the pressurizer vent valve are kept open demonstrate the effectiveness with 20 hours.

Abbreviations
MCP: Main coolant piping
CVCS: Chemical and volume control system
RWR pump: Refueling water recirculation pump
CS/RHR pump: Containment spray/residual heat removal pump
OVDR: Over-drain
FLML: Loss of RHR caused by failing to maintain water level
ICIS: In-core instrumentation system
PSV: Pressurizer safety valve

Table 19.1-141 Summary of Plant Configuration and Operator Activities during Mid-loop Operation (Sheet 4 of 4)

POS			Performed key activities	Time [hr] After shutdown	Time [hr] To RCS boiling NOTE2	Time [hr] To core uncovery NOTE2 MAAP Results	Time [hr] To core uncovery NOTE2 Considered in PRA	Decay Heat [MW]NOTE2	Remarks
POS 8	POS 8-1	A	Transfer the RV head above the RV with draining RCS inventory to one foot below flange level by the CS/RHR pump.	420	0.6	4.2	4.0	8.8	POS 8-1 conservatively assumes "POSs 8-1D and E" configuration that is the most severe plant configuration in POS 8-1 because neither gravity injection nor SG reflux cooling is available and there is a possibility of OVDR and FLML in POSs 8-1D and E.. *3: Gravity injection may be available due to removal of the RV head. However, since (1) POSs 8-1D and E are represented as POS 8-1 and (2) the duration is short and (3) water in RWSP, which is the water source for gravity injection, is small (being transfered to cavity) , gravity injection is assumed to be "No". *4: Although there is an RCS vent path, gravity injection is unavailable. This is because (1) RCS is pressurized above atmospheric pressure by a loss of RHR, (2) there is a possibility that the primary side is pressurized by the water level of the pressurizer and (3) that there is a pressure loss associated with the RCS vent path provided in the POS 4-2.
		B	Place the RV head.						
		C	The water around the cavity is drained by the RWR pump.						
		D	Drain RCS inventory by the CVCS to keep above a top of MCP.						
		E	Control RCS inventory by the CVCS. Start to install the ICIS from the top of RV, clench the RV head stud bolts. Remove SG nozzle dams on the hot leg side and then the cold leg side (End of POS 8-1).						
	POS 8-2		Control RCS inventory by the CVCS. Close the RCS vent path provided in POS 4-2. Continue installing the ICIS and clenching the RV head stud bolts. Install SG manways on cold leg side and then on hot leg side (End of POS 8-2).	480	0.6	4.4	4.0	8.3	SG reflux cooling is unavailable but gravity injection is available because the RCS pressure is equal to atmospheric pressure. ICIS installation is actually performed at one foot below the RCS flange level, but is conservatively assumed by the PRA to be at the center of MCP.
	POS 8-3	A	Control RCS inventory by the CVCS. Perform vaccum venting to remove air in RCS.	492	0.8	22.3	22.0	8.2	SG reflux cooling is available but gravity injection is unavailable because the RCS pressure is higher than atmospheric pressure and there is a pressure boundary in the RCS.
		B	Supply RCS inventory to RCS above the top of MCP for startup.						

NOTE
1: In actually, one-foot below flange level
2: Analysis condition (Decay heat) and results (Time) in MAAP
3: It is considered that Initiating event “OVDR” includes initiating event “FLML”.
4. Analysis results assuming the pressurizer vent valve are kept open demonstrate the effectiveness with 20 hours.

Abbreviations
MCP: Main coolant piping
CVCS: Chemical and volume control system
RWR pump: Refueling water recirculation pump
CS/RHR pump: Containment spray/residual heat removal pump
OVDR: Over-drain
FLML: Loss of RHR caused by failing to maintain water level
ICIS: In-core instrumentation system
PSV: Pressurizer safety valve

Table 19.1-142 Success Criteria of POS 4-3 for LPSD PRA (Example) (Sheet 1 of 4)

Success Criteria of High Head Injection

Initiating event identifier	Except loss of CCW/essential service water	Loss of CCW/essential service water
Success criteria	SI pumps 1 of 2	unavailable
	Pump A: outage Pump B: standby Pump C: outage Pump D: standby	Pump A: outage Pump B: standby (unavailable) Pump C: outage Pump D: standby (unavailable)
Mission time	24 hours	None
Operator actions	Manual starting of ECCS actuation signal	None

Success Criteria of RHRS

Initiating event identifier	Except loss of offsite power	Loss of offsite power (ac power recovery)
Success criteria	CS/RHR pumps 1 of 2	CS/RHR pumps 1 of 4
	Pump A: standby Pump B: standby Pump C: run (unavailable) Pump D: run (unavailable)	Pump A: standby Pump B: standby Pump C: run (need to restart) Pump D: run (need to restart)
Mission time	24 hours	24 hours
Operator actions	Manual starting of ECCS actuation and containment spray actuation signal	Manual starting of ECCS actuation and containment spray actuation signal

Success Criteria of CVCS

Initiating event identifier	All (RCS makeup)	ALL (Injection to the RCS)
Success criteria	Charging pump 1 of 1	Charging pump 1 of 1
	Pump A: outage Pump B: run (In case of LOOP, need to restart)	Pump A: outage Pump B: run (In case of LOOP, need to restart) Needs RWSAT makeup
Mission time	24 hours	24 hours
Operator actions	In case of LOOP, manual starting of Charging pump.	RWSAT makeup In case of LOOP, manual starting of Charging pump.

Table 19.1-142 Success Criteria of POS 4-3 for LPSD PRA (Example) (Sheet 2 of 4)

Success Criteria of CCWS

Initiating event identifier	Except loss of offsite power and loss of CCW/essential service water	
Success criteria	(A, B sub-train) CCW pumps 1 of 2	(C, D sub-train) CCW pumps 1 of 2
	Pump A: standby Pump B: run	Pump C: run Pump D: run
Mission time	24 hours	24 hours
Operator actions	None	None
Initiating event identifier	Loss of offsite power	
Success criteria	(A, B sub-train) CCW pumps 1 of 2	(C, D sub-train) CCW pumps 1 of 2
	Pump A: standby Pump B: run (need to restart)	Pump C: run (need to restart) Pump D: run (need to restart)
Mission time	24 hours	24 hours
Operator actions	Manual starting of containment spray actuation signal	Manual starting of containment spray actuation signal
Initiating event identifier	Loss of CCW/essential service water	
Success criteria	Unavailable	
	Pump A: standby (unavailable) Pump B: run (unavailable) Pump C: run (unavailable) Pump D: run (unavailable)	
Mission time	None	
Operator actions	None	

Table 19.1-142 Success Criteria of POS 4-3 for LPSD PRA (Example) (Sheet 3 of 4)

Success Criteria of ESWS

Initiating event identifier	Except loss of offsite power and loss of CCW/essential service water	
Success criteria	(A sub-train) ESW 1 pump/train	(B, C, D sub-train) ESW 1 pump/train
	Pump A: standby	Pump B: run Pump C: run Pump D: run
Mission time	24 hours	-
Operator actions	Change of strainer line by manual operation (if necessary)	Change of strainer line by manual operation (if necessary)
Initiating event identifier	Loss of offsite power	
Success criteria	(A, B, C sub-train) ESW 1 pump/train	(D sub-train) ESW 1 pump/train
	Pump A: standby	Pump B: run (need to restart) Pump C: run (need to restart) Pump D: run (need to restart)
Mission time	24 hours	-
Operator actions	Change of strainer line by manual operation (if necessary)	Change of strainer line by manual operation (if necessary)
Initiating event identifier	Loss of CCW/essential service water	
Success criteria	Unavailable	
	Pump A: standby Pump B: run (unavailable) Pump C: run (unavailable) Pump D: run (unavailable)	
Mission time	-	
Operator actions	-	

Table 19.1-142 Success Criteria of POS 4-3 for LPSD PRA (Example) (Sheet 4 of 4)

Success Criteria of Emergency Power Supply System

Initiating event identifier	Except loss of offsite power	
Success criteria	(A sub-train) Offsite power or Emergency power source	(B sub-train) Offsite power or Emergency power source
	Offsite power: available GT A: standby	Offsite power: available GT B: standby
Mission time	24 hours	24 hours
Operator actions	None	None
Success criteria	(C sub-train) Offsite power or Emergency power source	(D sub-train) Offsite power
	Offsite power: available GT C: standby	Offsite power: available GT D: standby
Mission time	24 hours	24 hours
Operator actions	None	None
Initiating event identifier	Loss of offsite power	
Success criteria	(A sub-train) Emergency power source	(B sub-train) Emergency power source
	Offsite power: unavailable GT A: standby	Offsite power: unavailable GT B: standby
Mission time	24 hours	24 hours
Operator actions	None	None
Success criteria	(C sub-train) Emergency power source	(D sub-train) Emergency power source
	Offsite power: unavailable GT C: standby	Offsite power: unavailable GT D: standby
Mission time	24 hours	24 hours
Operator actions	None	None

Table 19.1-143 Dominant Sequences of POS 4-3 for LPSD PRA

No	Sequence ID	Sequence Name	Sequence Frequency (/ry)	Percent Contrib.	Percent Contrib.Total
1	LOOP 4-3 0006	05 LOOP: POS4-3-RHB-SG-SIB-CVB-GI	1.0E-08	34.7%	34.7%
2	LOOP 4-3 0037	05 LOOP: POS4-3-GT-SP-AC	4.7E-09	15.7%	50.3%
3	LOCA 4-3 0006	01 LOCA: POS4-3-RHA-SG-SIA1-CVA1-GI	3.3E-09	11.0%	61.3%
4	FLML 4-3 0010	06 FLML: POS4-3-MC2-SG-SIA4-GI	2.9E-09	9.8%	71.1%
5	LOCA 4-3 0014	01 LOCA: POS4-3-LOA-SIA1-CVA1-GI	2.3E-09	7.6%	78.7%
6	LORH 4-3 0005	03 LORH: POS4-3-SG-SIA3-CVA3-GI	1.6E-09	5.5%	84.2%
7	LOOP 4-3 0009	05 LOOP: POS4-3-PR-GI-SC2	1.5E-09	5.1%	89.3%
8	LOOP 4-3 0024	05 LOOP: POS4-3-GT-AC-RHB-SG-SIB-CVB-GI	1.4E-09	4.6%	93.9%
9	LOCS 4-3 0003	04 LOCS: POS4-3-GI-SC1	8.3E-10	2.8%	96.7%
10	LOCA 4-3 0010	01 LOCA: POS4-3-MC1-SG-SIA1-GI	4.9E-10	1.7%	98.3%
11	LOOP 4-3 0015	05 LOOP: POS4-3-GT-RHB-SG-SIB-CVB-GI	2.2E-10	0.7%	99.1%
12	FLML 4-3 0014	06 FLML: POS4-3-LOB-SIA4-CVA4-GI	1.5E-10	0.5%	99.6%
13	LOOP 4-3 0036	05 LOOP: POS4-3-GT-SP-PR-GI-SC2	6.9E-11	0.2%	99.8%
14	LOOP 4-3 0033	05 LOOP: POS4-3-GT-SP-RHB-SG-SIB-CVB-GI	3.4E-11	0.1%	99.9%
15	LOOP 4-3 0027	05 LOOP: POS4-3-GT-AC-PR-GI-SC2	2.7E-11	0.1%	100.0%
16	LOOP 4-3 0018	05 LOOP: POS4-3-GT-PR-GI-SC2	1.8E-12	0.0%	100.0%
17	FLML 4-3 0006	06 FLML: POS4-3-RHA-SG-SIA4-CVA4-GI	NA	NA	NA
TOTAL =			3.0E-08	100.0%	

Table 19.1-144 Dominant Cutsets of POS 4-3 for LPSD PRA (Sheet 1 of 10)

No	Cutsets freq.(/ry)	Percent	Cutsets	Frequency/ probability	Basic Event Description
1	8.9E-09	30.1	!LOOP4-3	4.0E-04	LOSS OF OFFSITE POWER - POS4-3
			CHIOO02P+RWS-DP3	1.6E-01	(HE) FAIL TO START STANDBY CHARGING PUMP AND REFILL RWSAT WATER FROM RWSP
			GI	1.0E+00	GUARANTEED FAILURE OF GRAVITY INJECTION
			HPIOO02S-DP2	5.5E-02	(HE) FAIL TO START STANDBY SAFETY INJECTION PUMP
			RSSOO02P	2.6E-03	(HE) FAIL TO RE-START THE RHR PUMPS WHEN THE LOOP EVENT OCCURS
			SG	1.0E+00	GUARANTEED FAILURE OF DECAY HEAT REMOVAL BY SG
2	3.2E-09	10.7	!LOCA4-3	9.7E-05	LOSS OF COOLANT ACCIDENT - POS4-3
			CHIOO02RWS-DP3	1.6E-01	(HE) FAIL TO REFILL RWSAT WATER FROM RWSP
			GI	1.0E+00	GUARANTEED FAILURE OF GRAVITY INJECTION
			HPIOO02S-DP2	5.5E-02	(HE) FAIL TO START STANDBY SAFETY INJECTION PUMP
			RSSOO02LINE+P	3.8E-03	(HE) FAIL TO ESTABLISH RHR INJECTION LINE AND START STANBY PUMP
			SG	1.0E+00	GUARANTEED FAILURE OF DECAY HEAT REMOVAL BY SG
3	2.6E-09	8.7	!LOOP4-3	4.0E-04	LOSS OF OFFSITE POWER - POS4-3
			ACRPOS4-3-F	3.1E-01	FAILURE OF OFFSITE POWER RECOVERY (POS4-3)
			EPSCF4DLLRGTG-ALL	9.9E-04	CLASS-1E GTG A,B,C, D FAIL TO LOAD AND RUN AFTER FIRST HOUR OF OPERATION (CCF)
			EPSOO02RDG	2.1E-02	(HE) FAIL TO CONNECT THE ALTERNATE AC POWER SOURCE TO CLASS 1E BUS
4	2.1E-09	7.2	!LOCA4-3	9.7E-05	LOSS OF COOLANT ACCIDENT - POS4-3
			CHIOO02RWS-DP3	1.6E-01	(HE) FAIL TO REFILL RWSAT WATER FROM RWSP
			GI	1.0E+00	GUARANTEED FAILURE OF GRAVITY INJECTION
			HPIOO02S-DP2	5.5E-02	(HE) FAIL TO START STANDBY SAFETY INJECTION PUMP
			LOAOO02LC	2.6E-03	(HE) FAIL TO ISOLATE THE LEAKAGE TRAIN OF RHR SYSTEM

Table 19.1-144 Dominant Cutsets of POS 4-3 for LPSD PRA (Sheet 2 of 10)

No	Cutsets freq.(/ry)	Percent	Cutsets	Frequency/ probability	Basic Event Description
5	1.5E-09	5.2	!LORH4-3	4.7E-06	LOSS OF RHR CAUSED BY OTHER FAILURES - POS4-3
			CHIOO02RWS-DP2	6.7E-02	(HE) FAIL TO REFILL RWSAT WATER FROM RWSP
			GI	1.0E+00	GUARANTEED FAILURE OF GRAVITY INJECTION
			HPIOO02S	4.9E-03	(HE) FAIL TO START STANDBY SAFETY INJECTION PUMP
			SG	1.0E+00	GUARANTEED FAILURE OF DECAY HEAT REMOVAL BY SG
6	1.3E-09	4.5	!FLML4-3	2.3E-04	LOSS OF RHR CAUSED BY FAILING TO MAINTAIN WATER LEVEL (POS4-2, 4-3, 8-2, 8-3)
			CVCAVCD024B	1.2E-03	RHS-AOV-024B FAIL TO CLOSE
			GI	1.0E+00	GUARANTEED FAILURE OF GRAVITY INJECTION
			HPIOO02S	4.9E-03	(HE) FAIL TO START STANDBY SAFETY INJECTION PUMP
			MC-F	1.0E+00	GUARANTEED FAILURE OF RCS MAKEUP BY CHARGING PUMP
			SG	1.0E+00	GUARANTEED FAILURE OF DECAY HEAT REMOVAL BY SG
7	1.3E-09	4.5	!FLML4-3	2.3E-04	LOSS OF RHR CAUSED BY FAILING TO MAINTAIN WATER LEVEL (POS4-2, 4-3, 8-2, 8-3)
			CVCAVCD024C	1.2E-03	RHS-AOV-024C FAIL TO CLOSE
			GI	1.0E+00	GUARANTEED FAILURE OF GRAVITY INJECTION
			HPIOO02S	4.9E-03	(HE) FAIL TO START STANDBY SAFETY INJECTION PUMP
			MC-F	1.0E+00	GUARANTEED FAILURE OF RCS MAKEUP BY CHARGING PUMP
			SG	1.0E+00	GUARANTEED FAILURE OF DECAY HEAT REMOVAL BY SG
8	1.2E-09	4.2	!LOOP4-3	4.0E-04	LOSS OF OFFSITE POWER - POS4-3
			ACRPOS4-3-F	3.1E-01	FAILURE OF OFFSITE POWER RECOVERY (POS4-3)
			GI	1.0E+00	GUARANTEED FAILURE OF GRAVITY INJECTION
			SG	1.0E+00	GUARANTEED FAILURE OF DECAY HEAT REMOVAL BY SG
			SGNBTSWCCF3	1.0E-05	NON-SAFETY (PSMS) APPLICATION SOFTWARE CCF
9	6.3E-10	2.1	!LOCS4-3	1.6E-07	LOSS OF CCW/ESW - POS4-3
			ACWOO02SC	2.2E-02	(HE) FAIL TO ESTABLISH THE ALTERNATE CCWS BY FIRE PROTECTION WATER SUPPLY SYSTEM
			GI	1.0E+00	GUARANTEED FAILURE OF GRAVITY INJECTION

Table 19.1-144 Dominant Cutsets of POS 4-3 for LPSD PRA (Sheet 3 of 10)

No	Cutsets freq.(/ry)	Percent	Cutsets	Frequency/ probability	Basic Event Description
10	5.5E-10	1.9	!LOOP4-3	4.0E-04	LOSS OF OFFSITE POWER - POS4-3
			ACRPOS4-3-F	3.1E-01	FAILURE OF OFFSITE POWER RECOVERY (POS4-3)
			EPSCF4DLADGTG-ALL	2.1E-04	CLASS-1E GTG A,B,C,D FAIL TO START (CCF)
			EPSOO02RDG	2.1E-02	(HE) FAIL TO CONNECT THE ALTERNATE AC POWER SOURCE TO CLASS 1E BUS
11	4.3E-10	1.4	!LOOP4-3	4.0E-04	LOSS OF OFFSITE POWER - POS4-3
			ACWOO02SC	2.2E-02	(HE) FAIL TO ESTABLISH THE ALTERNATE CCWS BY FIRE PROTECTION WATER SUPPLY SYSTEM
			GI	1.0E+00	GUARANTEED FAILURE OF GRAVITY INJECTION
			SWSCF4PMBD001-ALL	4.8E-05	EWS-MPP-001A,B,C,D (EWS PUMP) FAIL TO RE-START (CCF)
12	4.1E-10	1.4	!LOOP4-3	4.0E-04	LOSS OF OFFSITE POWER - POS4-3
			ACRPOS4-3-F	3.1E-01	FAILURE OF OFFSITE POWER RECOVERY (POS4-3)
			EPSCF4DLSRGTG-ALL	1.6E-04	CLASS-1E GTG A,B FAIL TO LOAD AND RUN DURING FIRST HOUR OF OPERATION (CCF)
			EPSOO02RDG	2.1E-02	(HE) FAIL TO CONNECT THE ALTERNATE AC POWER SOURCE TO CLASS 1E BUS
13	2.4E-10	0.79	!LOOP4-3	4.0E-04	LOSS OF OFFSITE POWER - POS4-3
			ACWOO02SC	2.2E-02	(HE) FAIL TO ESTABLISH THE ALTERNATE CCWS BY FIRE PROTECTION WATER SUPPLY SYSTEM
			CWSCF4PCBD001-ALL	2.6E-05	NCS-MPP-001A,B,C,D (CCW PUMP) FAIL TO RE-START (CCF)
			GI	1.0E+00	GUARANTEED FAILURE OF GRAVITY INJECTION
14	1.8E-10	0.61	!LOOP4-3	4.0E-04	LOSS OF OFFSITE POWER - POS4-3
			ACRPOS4-3-F	3.1E-01	FAILURE OF OFFSITE POWER RECOVERY (POS4-3)
			EPSCF2DLLRAAC-ALL	1.5E-03	AAC A,B FAIL TO RUN AFTER FIRST HOUR OF OPERATION (CCF)
			EPSCF4DLLRGTG-ALL	9.9E-04	CLASS-1E GTG A,B,C, D FAIL TO LOAD AND RUN AFTER FIRST HOUR OF OPERATION (CCF)

Table 19.1-144 Dominant Cutsets of POS 4-3 for LPSD PRA (Sheet 4 of 10)

No	Cutsets freq.(/ry)	Percent	Cutsets	Frequency/ probability	Basic Event Description
15	1.6E-10	0.55	!LOOP4-3	4.0E-04	LOSS OF OFFSITE POWER - POS4-3
			ACRPOS4-3-S	6.9E-01	SUCCESS OF OFFSITE POWER RECOVERY (POS4-3)
			CHIOO01RECOV	5.8E-02	(HE) FAIL TO START CHARGING PUMP AND SAFETY INJECTION PUMP - LOCAL ACTION
			GI	1.0E+00	GUARANTEED FAILURE OF GRAVITY INJECTION
			SG	1.0E+00	GUARANTEED FAILURE OF DECAY HEAT REMOVAL BY SG
			SGNBTSWCCF3	1.0E-05	NON-SAFETY (PSMS) APPLICATION SOFTWARE CCF
16	1.1E-10	0.38	!LOOP4-3	4.0E-04	LOSS OF OFFSITE POWER - POS4-3
			ACWOO02SC	2.2E-02	(HE) FAIL TO ESTABLISH THE ALTERNATE CCWS BY FIRE PROTECTION WATER SUPPLY SYSTEM
			GI	1.0E+00	GUARANTEED FAILURE OF GRAVITY INJECTION
			SWSCF4MVOD503-ALL	1.3E-05	EWS-MOV-503A,B,C,D FAIL TO OPEN (CCF)
17	1.1E-10	0.37	!FLML4-3	2.3E-04	LOSS OF RHR CAUSED BY FAILING TO MAINTAIN WATER LEVEL (POS4-2, 4-3, 8-2, 8-3)
			GI	1.0E+00	GUARANTEED FAILURE OF GRAVITY INJECTION
			HPIOO02S	4.9E-03	(HE) FAIL TO START STANDBY SAFETY INJECTION PUMP
			MC-F	1.0E+00	GUARANTEED FAILURE OF RCS MAKEUP BY CHARGING PUMP
			SG	1.0E+00	GUARANTEED FAILURE OF DECAY HEAT REMOVAL BY SG
			SGNBTSWCCF1	1.0E-04	GROUP-1 APPLICATION SOFTWARE CCF
18	9.8E-11	0.33	!LOOP4-3	4.0E-04	LOSS OF OFFSITE POWER - POS4-3
			ACRPOS4-3-F	3.1E-01	FAILURE OF OFFSITE POWER RECOVERY (POS4-3)
			EPSCF4SEFFGTG-ALL	3.8E-05	CLASS-1E GTG A,B,C, D SEQUENCER FAIL TO OPERATE (CCF)
			EPSOO02RDG	2.1E-02	(HE) FAIL TO CONNECT THE ALTERNATE AC POWER SOURCE TO CLASS 1E BUS
19	6.5E-11	0.22	!LOCA4-3	9.7E-05	LOSS OF COOLANT ACCIDENT - POS4-3
			CHICF2MVCD031BC-ALL	1.4E-04	CVS-LCV-031B,C FAIL TO CLOSE (CCF)
			GI	1.0E+00	GUARANTEED FAILURE OF GRAVITY INJECTION
			HPIOO02S	4.9E-03	(HE) FAIL TO START STANDBY SAFETY INJECTION PUMP
			SG	1.0E+00	GUARANTEED FAILURE OF DECAY HEAT REMOVAL BY SG

Table 19.1-144 Dominant Cutsets of POS 4-3 for LPSD PRA (Sheet 5 of 10)

No	Cutsets freq.(/ry)	Percent	Cutsets	Frequency/ probability	Basic Event Description
20	6.4E-11	0.21	!LOOP4-3	4.0E-04	LOSS OF OFFSITE POWER - POS4-3
			EPSCF4CBSO52LC-ALL	1.6E-07	EPS 52/LCA,B,C,D (BREAKER) SPURIOUS OPEN (CCF)
			GI	1.0E+00	GUARANTEED FAILURE OF GRAVITY INJECTION
21	6.4E-11	0.21	!LOOP4-3	4.0E-04	LOSS OF OFFSITE POWER - POS4-3
			EPSCF4CBSO52STL-ALL	1.6E-07	EPS 52/STLA,B,C,D (BREAKER) SPURIOUS OPEN (CCF)
			GI	1.0E+00	GUARANTEED FAILURE OF GRAVITY INJECTION
22	6.4E-11	0.21	!LOOP4-3	4.0E-04	LOSS OF OFFSITE POWER - POS4-3
			EPSCF4CBSO52STH-ALL	1.6E-07	EPS 52/STHA,B,C,D (BREAKER) SPURIOUS OPEN (CCF)
			GI	1.0E+00	GUARANTEED FAILURE OF GRAVITY INJECTION
23	5.9E-11	0.20	!LOOP4-3	4.0E-04	LOSS OF OFFSITE POWER - POS4-3
			ACRPOS4-3-S	6.9E-01	SUCCESS OF OFFSITE POWER RECOVERY (POS4-3)
			EPSOO02RDG	2.1E-02	(HE) FAIL TO CONNECT THE ALTERNATE AC POWER SOURCE TO CLASS 1E BUS
			GI	1.0E+00	GUARANTEED FAILURE OF GRAVITY INJECTION
			SGNBTSWCCF3	1.0E-05	NON-SAFETY (PSMS) APPLICATION SOFTWARE CCF
24	5.7E-11	0.19	!LOCA4-3	9.7E-05	LOSS OF COOLANT ACCIDENT - POS4-3
			CHIPMYR001B	1.2E-04	CVS-MPP-001B (B-CHI PUMP) FAIL TO RUN
			GI	1.0E+00	GUARANTEED FAILURE OF GRAVITY INJECTION
			HPIOO02S	4.9E-03	(HE) FAIL TO START STANDBY SAFETY INJECTION PUMP
			SG	1.0E+00	GUARANTEED FAILURE OF DECAY HEAT REMOVAL BY SG
25	5.7E-11	0.19	!LOCA4-3	9.7E-05	LOSS OF COOLANT ACCIDENT - POS4-3
			CHIOO01RECOV	5.8E-02	(HE) FAIL TO START CHARGING PUMP AND SAFETY INJECTION PUMP - LOCAL ACTION
			GI	1.0E+00	GUARANTEED FAILURE OF GRAVITY INJECTION
			SGNBTSWCCF3	1.0E-05	NON-SAFETY (PSMS) APPLICATION SOFTWARE CCF

Table 19.1-144 Dominant Cutsets of POS 4-3 for LPSD PRA (Sheet 6 of 10)

No	Cutsets freq.(/ry)	Percent	Cutsets	Frequency/ probability	Basic Event Description
26	5.6E-11	0.19	!FLML4-3	2.3E-04	LOSS OF RHR CAUSED BY FAILING TO MAINTAIN WATER LEVEL (POS4-2, 4-3, 8-2, 8-3)
			CV-F	1.0E+00	GUARANTEED FAILURE OF INJECTION TO THE RCS BY CHARGING PUMP
			CVCAVCD024C	1.2E-03	RHS-AOV-024C FAIL TO CLOSE
			GI	1.0E+00	GUARANTEED FAILURE OF GRAVITY INJECTION
			HPIOO02S-DP2	5.5E-02	(HE) FAIL TO START STANDBY SAFETY INJECTION PUMP
			LOAOO02OD	3.8E-03	(HE) FAIL TO ISOLATE LOW-PRESSURE LETDOWN LINE
27	5.6E-11	0.19	!FLML4-3	2.3E-04	LOSS OF RHR CAUSED BY FAILING TO MAINTAIN WATER LEVEL (POS4-2, 4-3, 8-2, 8-3)
			CV-F	1.0E+00	GUARANTEED FAILURE OF INJECTION TO THE RCS BY CHARGING PUMP
			CVCAVCD024B	1.2E-03	RHS-AOV-024B FAIL TO CLOSE
			GI	1.0E+00	GUARANTEED FAILURE OF GRAVITY INJECTION
			HPIOO02S-DP2	5.5E-02	(HE) FAIL TO START STANDBY SAFETY INJECTION PUMP
			LOAOO02OD	3.8E-03	(HE) FAIL TO ISOLATE LOW-PRESSURE LETDOWN LINE
28	5.4E-11	0.18	!LOCA4-3	9.7E-05	LOSS OF COOLANT ACCIDENT - POS4-3
			CHICF4MVOD031-ALL	1.1E-04	CVS-LCV-031D,E,F,G FAIL TO OPEN (CCF)
			GI	1.0E+00	GUARANTEED FAILURE OF GRAVITY INJECTION
			HPIOO02S	4.9E-03	(HE) FAIL TO START STANDBY SAFETY INJECTION PUMP
			SG	1.0E+00	GUARANTEED FAILURE OF DECAY HEAT REMOVAL BY SG
29	5.3E-11	0.18	!LOOP4-3	4.0E-04	LOSS OF OFFSITE POWER - POS4-3
			ACRPOS4-3-F	3.1E-01	FAILURE OF OFFSITE POWER RECOVERY (POS4-3)
			EPSCF4CBTD52EPS-ALL	2.0E-05	EPS 52/EPSA,B,C, D (BREAKER) FAIL TO CLOSE (CCF)
			EPSOO02RDG	2.1E-02	(HE) FAIL TO CONNECT THE ALTERNATE AC POWER SOURCE TO CLASS 1E BUS
30	4.8E-11	0.16	!LOOP4-3	4.0E-04	LOSS OF OFFSITE POWER - POS4-3
			GI	1.0E+00	GUARANTEED FAILURE OF GRAVITY INJECTION
			SG	1.0E+00	GUARANTEED FAILURE OF DECAY HEAT REMOVAL BY SG
			SWSCF4PMYR001-ALL	1.2E-07	EWS-MPP-001A,B,C,D (EWS PUMP) FAIL TO RUN (CCF)

Table 19.1-144 Dominant Cutsets of POS 4-3 for LPSD PRA (Sheet 7 of 10)

No	Cutsets freq.(/ry)	Percent	Cutsets	Frequency/ probability	Basic Event Description
31	4.7E-11	0.16	!LOCA4-3	9.7E-05	LOSS OF COOLANT ACCIDENT - POS4-3
			GI	1.0E+00	GUARANTEED FAILURE OF GRAVITY INJECTION
			HPIOO02S	4.9E-03	(HE) FAIL TO START STANDBY SAFETY INJECTION PUMP
			SG	1.0E+00	GUARANTEED FAILURE OF DECAY HEAT REMOVAL BY SG
			SGNBTSWCCF1	1.0E-04	GROUP-1 APPLICATION SOFTWARE CCF
32	4.5E-11	0.15	!LOOP4-3	4.0E-04	LOSS OF OFFSITE POWER - POS4-3
			GI	1.0E+00	GUARANTEED FAILURE OF GRAVITY INJECTION
			HPIOO02S-DP2	5.5E-02	(HE) FAIL TO START STANDBY SAFETY INJECTION PUMP
			RSSOO02P	2.6E-03	(HE) FAIL TO RE-START THE RHR PUMPS WHEN THE LOOP EVENT OCCURS
			RWSOO04XV051	8.0E-04	(HE) MISALIGNMENT OF RWS-VLV-051 AFTER TEST OR MAINTENANCE
			SG	1.0E+00	GUARANTEED FAILURE OF DECAY HEAT REMOVAL BY SG
33	4.3E-11	0.15	!LOCS4-3	1.6E-07	LOSS OF CCW/ESW - POS4-3
			CHIPMAD001B-R	1.5E-03	CVS-MPP-001B (B-CHI PUMP) FAIL TO RE-START
			GI	1.0E+00	GUARANTEED FAILURE OF GRAVITY INJECTION
34	4.2E-11	0.14	!FLML4-3	2.3E-04	LOSS OF RHR CAUSED BY FAILING TO MAINTAIN WATER LEVEL (POS4-2, 4-3, 8-2, 8-3)
			CVCAVCD024C	1.2E-03	RHS-AOV-024C FAIL TO CLOSE
			GI	1.0E+00	GUARANTEED FAILURE OF GRAVITY INJECTION
			HPICF2PMAD001BD-ALL	1.5E-04	SIS-MPP-001B,D (SI PUMP) FAIL TO START (CCF)
			MC-F	1.0E+00	GUARANTEED FAILURE OF RCS MAKEUP BY CHARGING PUMP
			SG	1.0E+00	GUARANTEED FAILURE OF DECAY HEAT REMOVAL BY SG
35	4.2E-11	0.14	!FLML4-3	2.3E-04	LOSS OF RHR CAUSED BY FAILING TO MAINTAIN WATER LEVEL (POS4-2, 4-3, 8-2, 8-3)
			CVCAVCD024B	1.2E-03	RHS-AOV-024B FAIL TO CLOSE
			GI	1.0E+00	GUARANTEED FAILURE OF GRAVITY INJECTION
			HPICF2PMAD001BD-ALL	1.5E-04	SIS-MPP-001B,D (SI PUMP) FAIL TO START (CCF)
			MC-F	1.0E+00	GUARANTEED FAILURE OF RCS MAKEUP BY CHARGING PUMP
			SG	1.0E+00	GUARANTEED FAILURE OF DECAY HEAT REMOVAL BY SG

Table 19.1-144 Dominant Cutsets of POS 4-3 for LPSD PRA (Sheet 8 of 10)

No	Cutsets freq.(/ry)	Percent	Cutsets	Frequency/ probability	Basic Event Description
36	4.0E-11	0.14	!LOOP4-3	4.0E-04	LOSS OF OFFSITE POWER - POS4-3
			ACRPOS4-3-F	3.1E-01	FAILURE OF OFFSITE POWER RECOVERY (POS4-3)
			EPSCBFO52UAT-ALL	2.0E-05	EPS 52/UATA,B,C,D (BREAKER) FAIL TO OPEN (CCF)
			EPSOO01UATRAT	1.6E-02	(HE) FAIL TO SEPARATE 52/UATA,D,52/RATA,D
37	4.0E-11	0.14	!LOOP4-3	4.0E-04	LOSS OF OFFSITE POWER - POS4-3
			ACRPOS4-3-F	3.1E-01	FAILURE OF OFFSITE POWER RECOVERY (POS4-3)
			EPSCBFO52RAT-ALL	2.0E-05	EPS 52/RATA,B,C,D (BREAKER) FAIL TO OPEN (CCF)
			EPSOO01UATRAT	1.6E-02	(HE) FAIL TO SEPARATE 52/UATA,D,52/RATA,D
38	3.9E-11	0.13	!LOOP4-3	4.0E-04	LOSS OF OFFSITE POWER - POS4-3
			GI	1.0E+00	GUARANTEED FAILURE OF GRAVITY INJECTION
			HPIOO02S-DP2	5.5E-02	(HE) FAIL TO START STANDBY SAFETY INJECTION PUMP
			RSSOO02P	2.6E-03	(HE) FAIL TO RE-START THE RHR PUMPS WHEN THE LOOP EVENT OCCURS
			RWSXVOD052	7.0E-04	RWS-VLV-052 FAIL TO OPEN
			SG	1.0E+00	GUARANTEED FAILURE OF DECAY HEAT REMOVAL BY SG
39	3.9E-11	0.13	!LOOP4-3	4.0E-04	LOSS OF OFFSITE POWER - POS4-3
			GI	1.0E+00	GUARANTEED FAILURE OF GRAVITY INJECTION
			HPIOO02S-DP2	5.5E-02	(HE) FAIL TO START STANDBY SAFETY INJECTION PUMP
			RSSOO02P	2.6E-03	(HE) FAIL TO RE-START THE RHR PUMPS WHEN THE LOOP EVENT OCCURS
			RWSXVOD021	7.0E-04	RWS-VLV-021 FAIL TO OPEN
			SG	1.0E+00	GUARANTEED FAILURE OF DECAY HEAT REMOVAL BY SG
40	3.8E-11	0.13	!LOOP4-3	4.0E-04	LOSS OF OFFSITE POWER - POS4-3
			ACRPOS4-3-F	3.1E-01	FAILURE OF OFFSITE POWER RECOVERY (POS4-3)
			EPSCF2DLLRAAC-ALL	1.5E-03	AAC A,B FAIL TO RUN AFTER FIRST HOUR OF OPERATION (CCF)
			EPSCF4DLADGTG-ALL	2.1E-04	CLASS-1E GTG A,B,C,D FAIL TO START (CCF)

Table 19.1-144 Dominant Cutsets of POS 4-3 for LPSD PRA (Sheet 9 of 10)

No	Cutsets freq.(/ry)	Percent	Cutsets	Frequency/ probability	Basic Event Description
41	3.8E-11	0.13	!LOOP4-3	4.0E-04	LOSS OF OFFSITE POWER - POS4-3
			ACRPOS4-3-F	3.1E-01	FAILURE OF OFFSITE POWER RECOVERY (POS4-3)
			EPSCF4DLLRGTG-ALL	9.9E-04	CLASS-1E GTG A,B,C, D FAIL TO LOAD AND RUN AFTER FIRST HOUR OF OPERATION (CCF)
			EPSDLLRAACA	1.9E-02	A-AAC FAIL TO LOAD AND RUN AFTER FIRST HOUR OF OPERATION
			EPSDLLRAACB	1.9E-02	B-AAC FAIL TO LOAD AND RUN AFTER FIRST HOUR OF OPERATION
42	3.7E-11	0.13	!LOOP4-3	4.0E-04	LOSS OF OFFSITE POWER - POS4-3
			ACRPOS4-3-F	3.1E-01	FAILURE OF OFFSITE POWER RECOVERY (POS4-3)
			EPSCF2DLADAAC-ALL	3.1E-04	AAC A,B FAIL TO START (CCF)
			EPSCF4DLLRGTG-ALL	9.9E-04	CLASS-1E GTG A,B,C, D FAIL TO LOAD AND RUN AFTER FIRST HOUR OF OPERATION (CCF)
43	3.4E-11	0.12	!LOCA4-3	9.7E-05	LOSS OF COOLANT ACCIDENT - POS4-3
			CHIAVFC048	7.2E-05	CVS-FCV-048 FAIL TO CONTROL
			GI	1.0E+00	GUARANTEED FAILURE OF GRAVITY INJECTION
			HPIOO02S	4.9E-03	(HE) FAIL TO START STANDBY SAFETY INJECTION PUMP
			SG	1.0E+00	GUARANTEED FAILURE OF DECAY HEAT REMOVAL BY SG
44	2.9E-11	0.10	!LOOP4-3	4.0E-04	LOSS OF OFFSITE POWER - POS4-3
			CHIPMAD001B-R	1.5E-03	CVS-MPP-001B (B-CHI PUMP) FAIL TO RE-START
			GI	1.0E+00	GUARANTEED FAILURE OF GRAVITY INJECTION
			SWSCF4PMBD001-ALL	4.8E-05	EWS-MPP-001A,B,C,D (EWS PUMP) FAIL TO RE-START (CCF)
45	2.9E-11	0.10	!LOCS4-3	1.6E-07	LOSS OF CCW/ESW - POS4-3
			ACWMVOD322B	1.0E-03	NCS-MOV-322B FAIL TO OPEN
			GI	1.0E+00	GUARANTEED FAILURE OF GRAVITY INJECTION
46	2.9E-11	0.10	!LOCS4-3	1.6E-07	LOSS OF CCW/ESW - POS4-3
			ACWMVCD316B	1.0E-03	NCS-MOV-316B FAIL TO CLOSE
			GI	1.0E+00	GUARANTEED FAILURE OF GRAVITY INJECTION
47	2.9E-11	0.10	!LOCS4-3	1.6E-07	LOSS OF CCW/ESW - POS4-3
			ACWMVOD321B	1.0E-03	NCS-MOV-321B FAIL TO OPEN
			GI	1.0E+00	GUARANTEED FAILURE OF GRAVITY INJECTION

Table 19.1-144 Dominant Cutsets of POS 4-3 for LPSD PRA (Sheet 10 of 10)

No	Cutsets freq.(/ry)	Percent	Cutsets	Frequency/ probability	Basic Event Description
48	2.9E-11	0.10	!LOCS4-3	1.6E-07	LOSS OF CCW/ESW - POS4-3
			ACWMVOD324B	1.0E-03	NCS-MOV-324B FAIL TO OPEN
			GI	1.0E+00	GUARANTEED FAILURE OF GRAVITY INJECTION
49	2.9E-11	0.10	!LOCS4-3	1.6E-07	LOSS OF CCW/ESW - POS4-3
			ACWMVOD325B	1.0E-03	NCS-MOV-325B FAIL TO OPEN
			GI	1.0E+00	GUARANTEED FAILURE OF GRAVITY INJECTION
50	2.8E-11	0.10	!LOOP4-3	4.0E-04	LOSS OF OFFSITE POWER - POS4-3
			ACRPOS4-3-F	3.1E-01	FAILURE OF OFFSITE POWER RECOVERY (POS4-3)
			EPSCF2DLLRAAC-ALL	1.5E-03	AAC A,B FAIL TO RUN AFTER FIRST HOUR OF OPERATION (CCF)
			EPSCF4DLSRGTG-ALL	1.6E-04	CLASS-1E GTG A,B FAIL TO LOAD AND RUN DURING FIRST HOUR OF OPERATION (CCF)

Table 19.1-145 LOOP with Success of ac Power Supply Sequence Dominant Cutsets of POS 4-3 for LPSD PRA (Sheet 1 of 3)

No	Cutsets freq.(/ry)	Percent	Cutsets	Frequency/ probability	Basic Event Description
1	8.9E-09	86.8	!LOOP4-3	4.0E-04	LOSS OF OFFSITE POWER - POS4-3
			CHIOO02P+RWS-DP3	1.6E-01	(HE) FAIL TO START STANDBY CHARGING PUMP AND REFILL RWSAT WATER FROM RWSP
			GI	1.0E+00	GUARANTEED FAILURE OF GRAVITY INJECTION
			HPIOO02S-DP2	5.5E-02	(HE) FAIL TO START STANDBY SAFETY INJECTION PUMP
			RSSOO02P	2.6E-03	(HE) FAIL TO RE-START THE RHR PUMPS WHEN THE LOOP EVENT OCCURS
			SG	1.0E+00	GUARANTEED FAILURE OF DECAY HEAT REMOVAL BY SG
2	4.8E-11	0.47	!LOOP4-3	4.0E-04	LOSS OF OFFSITE POWER - POS4-3
			GI	1.0E+00	GUARANTEED FAILURE OF GRAVITY INJECTION
			SG	1.0E+00	GUARANTEED FAILURE OF DECAY HEAT REMOVAL BY SG
			SWSCF4PMYR001-ALL	1.2E-07	EWS-MPP-001A,B,C,D (EWS PUMP) FAIL TO RUN (CCF)
3	4.5E-11	0.44	!LOOP4-3	4.0E-04	LOSS OF OFFSITE POWER - POS4-3
			GI	1.0E+00	GUARANTEED FAILURE OF GRAVITY INJECTION
			HPIOO02S-DP2	5.5E-02	(HE) FAIL TO START STANDBY SAFETY INJECTION PUMP
			RSSOO02P	2.6E-03	(HE) FAIL TO RE-START THE RHR PUMPS WHEN THE LOOP EVENT OCCURS
			RWSOO04XV051	8.0E-04	(HE) MISALIGNMENT OF RWS-VLV-051 AFTER TEST OR MAINTENANCE
			SG	1.0E+00	GUARANTEED FAILURE OF DECAY HEAT REMOVAL BY SG
4	3.9E-11	0.38	!LOOP4-3	4.0E-04	LOSS OF OFFSITE POWER - POS4-3
			GI	1.0E+00	GUARANTEED FAILURE OF GRAVITY INJECTION
			HPIOO02S-DP2	5.5E-02	(HE) FAIL TO START STANDBY SAFETY INJECTION PUMP
			RSSOO02P	2.6E-03	(HE) FAIL TO RE-START THE RHR PUMPS WHEN THE LOOP EVENT OCCURS
			RWSXVOD021	7.0E-04	RWS-VLV-021 FAIL TO OPEN
			SG	1.0E+00	GUARANTEED FAILURE OF DECAY HEAT REMOVAL BY SG

Table 19.1-145 LOOP with Success of ac Power Supply Sequence Dominant Cutsets of POS 4-3 for LPSD PRA (Sheet 2 of 3)

No	Cutsets freq.(/ry)	Percent	Cutsets	Frequency/ probability	Basic Event Description
5	3.9E-11	0.38	!LOOP4-3	4.0E-04	LOSS OF OFFSITE POWER - POS4-3
			GI	1.0E+00	GUARANTEED FAILURE OF GRAVITY INJECTION
			HPIOO02S-DP2	5.5E-02	(HE) FAIL TO START STANDBY SAFETY INJECTION PUMP
			RSSOO02P	2.6E-03	(HE) FAIL TO RE-START THE RHR PUMPS WHEN THE LOOP EVENT OCCURS
			RWSXVOD052	7.0E-04	RWS-VLV-052 FAIL TO OPEN
			SG	1.0E+00	GUARANTEED FAILURE OF DECAY HEAT REMOVAL BY SG
6	2.7E-11	0.26	!LOOP4-3	4.0E-04	LOSS OF OFFSITE POWER - POS4-3
			CWSCF4PCYR001-ALL	6.7E-08	NCS-MPP-001A,B,C,D (CCW PUMP) FAIL TO RUN (CCF)
			GI	1.0E+00	GUARANTEED FAILURE OF GRAVITY INJECTION
			SG	1.0E+00	GUARANTEED FAILURE OF DECAY HEAT REMOVAL BY SG
7	2.0E-11	0.19	!LOOP4-3	4.0E-04	LOSS OF OFFSITE POWER - POS4-3
			EPSCBFO52UAT-D	3.5E-04	EPS 52/UATD (BREAKER) FAIL TO OPEN
			GI	1.0E+00	GUARANTEED FAILURE OF GRAVITY INJECTION
			HPIOO02S-DP2	5.5E-02	(HE) FAIL TO START STANDBY SAFETY INJECTION PUMP
			RSSOO02P	2.6E-03	(HE) FAIL TO RE-START THE RHR PUMPS WHEN THE LOOP EVENT OCCURS
			SG	1.0E+00	GUARANTEED FAILURE OF DECAY HEAT REMOVAL BY SG
8	2.0E-11	0.19	!LOOP4-3	4.0E-04	LOSS OF OFFSITE POWER - POS4-3
			EPSCBFO52RAT-D	3.5E-04	EPS 52/RATD (BREAKER) FAIL TO OPEN
			GI	1.0E+00	GUARANTEED FAILURE OF GRAVITY INJECTION
			HPIOO02S-DP2	5.5E-02	(HE) FAIL TO START STANDBY SAFETY INJECTION PUMP
			RSSOO02P	2.6E-03	(HE) FAIL TO RE-START THE RHR PUMPS WHEN THE LOOP EVENT OCCURS
			SG	1.0E+00	GUARANTEED FAILURE OF DECAY HEAT REMOVAL BY SG

Table 19.1-145 LOOP with Success of ac Power Supply Sequence Dominant Cutsets of POS 4-3 for LPSD PRA (Sheet 3 of 3)

No	Cutsets freq.(/ry)	Percent	Cutsets	Frequency/ probability	Basic Event Description
9	1.9E-11	0.19	!LOOP4-3	4.0E-04	LOSS OF OFFSITE POWER - POS4-3
			EPSDLLREGTGD-ABCD	1.9E-02	D-CLASS 1E GTG FAIL TO LOAD AND RUN AFTER FIRST HOUR OF OPERATION
			EPSOO02RDG	2.1E-02	(HE) FAIL TO CONNECT THE ALTERNATE AC POWER SOURCE TO CLASS 1E BUS
			GI	1.0E+00	GUARANTEED FAILURE OF GRAVITY INJECTION
			HPIOO02S-DP2	5.5E-02	(HE) FAIL TO START STANDBY SAFETY INJECTION PUMP
			RSSOO02P	2.6E-03	(HE) FAIL TO RE-START THE RHR PUMPS WHEN THE LOOP EVENT OCCURS
			SG	1.0E+00	GUARANTEED FAILURE OF DECAY HEAT REMOVAL BY SG
10	1.9E-11	0.19	!LOOP4-3	4.0E-04	LOSS OF OFFSITE POWER - POS4-3
			CHIOO02P+RWS-DP2	6.8E-02	(HE) FAIL TO START STANDBY CHARGING PUMP AND REFILL RWSAT WATER FROM RWSP
			EPSDLLREGTGB-ABCD	1.9E-02	B-CLASS 1E GTG FAIL TO LOAD AND RUN AFTER FIRST HOUR OF OPERATION
			EPSDLLREGTGC-ABCD	1.9E-02	C-CLASS 1E GTG FAIL TO LOAD AND RUN AFTER FIRST HOUR OF OPERATION
			GI	1.0E+00	GUARANTEED FAILURE OF GRAVITY INJECTION
			RSSOO02P	2.6E-03	(HE) FAIL TO RE-START THE RHR PUMPS WHEN THE LOOP EVENT OCCURS
			SG	1.0E+00	GUARANTEED FAILURE OF DECAY HEAT REMOVAL BY SG

Table 19.1-146 LOOP Resulting SBO Sequence Dominant Cutsets of POS 4-3 for LPSD PRA (Sheet 1 of 2)

No	Cutsets freq.(/ry)	Percent	Cutsets	Frequency/ probability	Basic Event Description
1	2.6E-09	55.3	!LOOP4-3	4.0E-04	LOSS OF OFFSITE POWER - POS4-3
			ACRPOS4-3-F	3.1E-01	FAILURE OF OFFSITE POWER RECOVERY (POS4-3)
			EPSCF4DLLRGTG-ALL	9.9E-04	CLASS-1E GTG A,B,C, D FAIL TO LOAD AND RUN AFTER FIRST HOUR OF OPERATION (CCF)
			EPSOO02RDG	2.1E-02	(HE) FAIL TO CONNECT THE ALTERNATE AC POWER SOURCE TO CLASS 1E BUS
2	5.5E-10	11.8	!LOOP4-3	4.0E-04	LOSS OF OFFSITE POWER - POS4-3
			ACRPOS4-3-F	3.1E-01	FAILURE OF OFFSITE POWER RECOVERY (POS4-3)
			EPSCF4DLADGTG-ALL	2.1E-04	CLASS-1E GTG A,B,C,D FAIL TO START (CCF)
			EPSOO02RDG	2.1E-02	(HE) FAIL TO CONNECT THE ALTERNATE AC POWER SOURCE TO CLASS 1E BUS
3	4.1E-10	8.7	!LOOP4-3	4.0E-04	LOSS OF OFFSITE POWER - POS4-3
			ACRPOS4-3-F	3.1E-01	FAILURE OF OFFSITE POWER RECOVERY (POS4-3)
			EPSCF4DLSRGTG-ALL	1.6E-04	CLASS-1E GTG A,B FAIL TO LOAD AND RUN DURING FIRST HOUR OF OPERATION (CCF)
			EPSOO02RDG	2.1E-02	(HE) FAIL TO CONNECT THE ALTERNATE AC POWER SOURCE TO CLASS 1E BUS
4	1.8E-10	3.9	!LOOP4-3	4.0E-04	LOSS OF OFFSITE POWER - POS4-3
			ACRPOS4-3-F	3.1E-01	FAILURE OF OFFSITE POWER RECOVERY (POS4-3)
			EPSCF2DLLRAAC-ALL	1.5E-03	AAC A,B FAIL TO RUN AFTER FIRST HOUR OF OPERATION (CCF)
			EPSCF4DLLRGTG-ALL	9.9E-04	CLASS-1E GTG A,B,C, D FAIL TO LOAD AND RUN AFTER FIRST HOUR OF OPERATION (CCF)
5	9.8E-11	2.1	!LOOP4-3	4.0E-04	LOSS OF OFFSITE POWER - POS4-3
			ACRPOS4-3-F	3.1E-01	FAILURE OF OFFSITE POWER RECOVERY (POS4-3)
			EPSCF4SEFFGTG-ALL	3.8E-05	CLASS-1E GTG A,B,C, D SEQUENCER FAIL TO OPERATE (CCF)
			EPSOO02RDG	2.1E-02	(HE) FAIL TO CONNECT THE ALTERNATE AC POWER SOURCE TO CLASS 1E BUS

Table 19.1-146 LOOP Resulting SBO Sequence Dominant Cutsets of POS 4-3 for LPSD PRA (Sheet 2 of 2)

No	Cutsets freq.(/ry)	Percent	Cutsets	Frequency/ probability	Basic Event Description
6	5.3E-11	1.1	!LOOP4-3	4.0E-04	LOSS OF OFFSITE POWER - POS4-3
			ACRPOS4-3-F	3.1E-01	FAILURE OF OFFSITE POWER RECOVERY (POS4-3)
			EPSCF4CBTD52EPS-ALL	2.0E-05	EPS 52/EPSA,B,C, D (BREAKER) FAIL TO CLOSE (CCF)
			EPSOO02RDG	2.1E-02	(HE) FAIL TO CONNECT THE ALTERNATE AC POWER SOURCE TO CLASS 1E BUS
7	4.0E-11	0.87	!LOOP4-3	4.0E-04	LOSS OF OFFSITE POWER - POS4-3
			ACRPOS4-3-F	3.1E-01	FAILURE OF OFFSITE POWER RECOVERY (POS4-3)
			EPSCBFO52RAT-ALL	2.0E-05	EPS 52/RATA,B,C,D (BREAKER) FAIL TO OPEN (CCF)
			EPSOO01UATRAT	1.6E-02	(HE) FAIL TO SEPARATE 52/UATA,D,52/RATA,D
8	4.0E-11	0.87	!LOOP4-3	4.0E-04	LOSS OF OFFSITE POWER - POS4-3
			ACRPOS4-3-F	3.1E-01	FAILURE OF OFFSITE POWER RECOVERY (POS4-3)
			EPSCBFO52UAT-ALL	2.0E-05	EPS 52/UATA,B,C,D (BREAKER) FAIL TO OPEN (CCF)
			EPSOO01UATRAT	1.6E-02	(HE) FAIL TO SEPARATE 52/UATA,D,52/RATA,D
9	3.8E-11	0.83	!LOOP4-3	4.0E-04	LOSS OF OFFSITE POWER - POS4-3
			ACRPOS4-3-F	3.1E-01	FAILURE OF OFFSITE POWER RECOVERY (POS4-3)
			EPSCF2DLLRAAC-ALL	1.5E-03	AAC A,B FAIL TO RUN AFTER FIRST HOUR OF OPERATION (CCF)
			EPSCF4DLADGTG-ALL	2.1E-04	CLASS-1E GTG A,B,C,D FAIL TO START (CCF)
10	3.8E-11	0.81	!LOOP4-3	4.0E-04	LOSS OF OFFSITE POWER - POS4-3
			ACRPOS4-3-F	3.1E-01	FAILURE OF OFFSITE POWER RECOVERY (POS4-3)
			EPSCF4DLLRGTG-ALL	9.9E-04	CLASS-1E GTG A,B,C, D FAIL TO LOAD AND RUN AFTER FIRST HOUR OF OPERATION (CCF)
			EPSDLLRAACA	1.9E-02	A-AAC FAIL TO LOAD AND RUN AFTER FIRST HOUR OF OPERATION
			EPSDLLRAACB	1.9E-02	B-AAC FAIL TO LOAD AND RUN AFTER FIRST HOUR OF OPERATION

Table 19.1-147 LOCA with No Mitigation System Sequence Dominant Cutsets of POS 4-3 for LPSD PRA (Sheet 1 of 4)

No	Cutsets freq.(/ry)	Percent	Cutsets	Frequency/ probability	Basic Event Description
1	3.2E-09	97.6	!LOCA4-3	9.7E-05	LOSS OF COOLANT ACCIDENT - POS4-3
			CHIOO02RWS-DP3	1.6E-01	(HE) FAIL TO REFILL RWSAT WATER FROM RWSP
			GI	1.0E+00	GUARANTEED FAILURE OF GRAVITY INJECTION
			HPIOO02S-DP2	5.5E-02	(HE) FAIL TO START STANDBY SAFETY INJECTION PUMP
			SG	1.0E+00	GUARANTEED FAILURE OF DECAY HEAT REMOVAL BY SG
			RSSOO02LINE+P	3.8E-03	(HE) FAIL TO ESTABLISH RHR INJECTION LINE AND START STANBY PUMP
2	1.6E-11	0.49	!LOCA4-3	9.7E-05	LOSS OF COOLANT ACCIDENT - POS4-3
			GI	1.0E+00	GUARANTEED FAILURE OF GRAVITY INJECTION
			HPIOO02S-DP2	5.5E-02	(HE) FAIL TO START STANDBY SAFETY INJECTION PUMP
			RSSOO02LINE+P	3.8E-03	(HE) FAIL TO ESTABLISH RHR INJECTION LINE AND START STANBY PUMP
			SG	1.0E+00	GUARANTEED FAILURE OF DECAY HEAT REMOVAL BY SG
			RWSOO04XV051	8.0E-04	(HE) MISALIGNMENT OF RWS-VLV-051 AFTER TEST OR MAINTENANCE
3	1.4E-11	0.43	!LOCA4-3	9.7E-05	LOSS OF COOLANT ACCIDENT - POS4-3
			GI	1.0E+00	GUARANTEED FAILURE OF GRAVITY INJECTION
			HPIOO02S-DP2	5.5E-02	(HE) FAIL TO START STANDBY SAFETY INJECTION PUMP
			SG	1.0E+00	GUARANTEED FAILURE OF DECAY HEAT REMOVAL BY SG
			RSSOO02LINE+P	3.8E-03	(HE) FAIL TO ESTABLISH RHR INJECTION LINE AND START STANBY PUMP
			RWSXVOD052	7.0E-04	RWS-VLV-052 FAIL TO OPEN

Table 19.1-147 LOCA with No Mitigation System Sequence Dominant Cutsets of POS 4-3 for LPSD PRA (Sheet 2 of 4)

No	Cutsets freq.(/ry)	Percent	Cutsets	Frequency/ probability	Basic Event Description
4	1.4E-11	0.43	!LOCA4-3	9.7E-05	LOSS OF COOLANT ACCIDENT - POS4-3
			GI	1.0E+00	GUARANTEED FAILURE OF GRAVITY INJECTION
			HPIOO02S-DP2	5.5E-02	(HE) FAIL TO START STANDBY SAFETY INJECTION PUMP
			RSSOO02LINE+P	3.8E-03	(HE) FAIL TO ESTABLISH RHR INJECTION LINE AND START STANBY PUMP
			SG	1.0E+00	GUARANTEED FAILURE OF DECAY HEAT REMOVAL BY SG
			RWSXVOD021	7.0E-04	RWS-VLV-021 FAIL TO OPEN
5	3.7E-12	0.12	!LOCA4-3	9.7E-05	LOSS OF COOLANT ACCIDENT - POS4-3
			CHIOO02RWS-DP2	6.7E-02	(HE) FAIL TO REFILL RWSAT WATER FROM RWSP
			GI	1.0E+00	GUARANTEED FAILURE OF GRAVITY INJECTION
			HPICF2PMAD001BD-ALL	1.5E-04	SIS-MPP-001B,D (SI PUMP) FAIL TO START (CCF)
			SG	1.0E+00	GUARANTEED FAILURE OF DECAY HEAT REMOVAL BY SG
			RSSOO02LINE+P	3.8E-03	(HE) FAIL TO ESTABLISH RHR INJECTION LINE AND START STANBY PUMP
6	3.0E-12	0.09	!LOCA4-3	9.7E-05	LOSS OF COOLANT ACCIDENT - POS4-3
			CHIOO02RWS-DP2	6.7E-02	(HE) FAIL TO REFILL RWSAT WATER FROM RWSP
			GI	1.0E+00	GUARANTEED FAILURE OF GRAVITY INJECTION
			HPIOO02S	4.9E-03	(HE) FAIL TO START STANDBY SAFETY INJECTION PUMP
			SG	1.0E+00	GUARANTEED FAILURE OF DECAY HEAT REMOVAL BY SG
			RSSCF2MVOD021AB-ALL	9.5E-05	RHS-MOV-021A,B FAIL TO OPEN (CCF)

Table 19.1-147 LOCA with No Mitigation System Sequence Dominant Cutsets of POS 4-3 for LPSD PRA (Sheet 3 of 4)

No	Cutsets freq.(/ry)	Percent	Cutsets	Frequency/ probability	Basic Event Description
7	3.0E-12	0.09	!LOCA4-3	9.7E-05	LOSS OF COOLANT ACCIDENT - POS4-3
			CHIOO02RWS-DP2	6.7E-02	(HE) FAIL TO REFILL RWSAT WATER FROM RWSP
			GI	1.0E+00	GUARANTEED FAILURE OF GRAVITY INJECTION
			HPIOO02S	4.9E-03	(HE) FAIL TO START STANDBY SAFETY INJECTION PUMP
			SG	1.0E+00	GUARANTEED FAILURE OF DECAY HEAT REMOVAL BY SG
			RSSCF2MVOD001AB-ALL	9.5E-05	RHS-MOV-001A,B FAIL TO OPEN (CCF)
8	3.0E-12	0.09	!LOCA4-3	9.7E-05	LOSS OF COOLANT ACCIDENT - POS4-3
			CHIOO02RWS-DP2	6.7E-02	(HE) FAIL TO REFILL RWSAT WATER FROM RWSP
			GI	1.0E+00	GUARANTEED FAILURE OF GRAVITY INJECTION
			HPIOO02S	4.9E-03	(HE) FAIL TO START STANDBY SAFETY INJECTION PUMP
			SG	1.0E+00	GUARANTEED FAILURE OF DECAY HEAT REMOVAL BY SG
			RSSCF2MVOD002AB-ALL	9.5E-05	RHS-MOV-002A,B FAIL TO OPEN (CCF)
9	3.0E-12	0.09	!LOCA4-3	9.7E-05	LOSS OF COOLANT ACCIDENT - POS4-3
			CHIOO02RWS-DP2	6.7E-02	(HE) FAIL TO REFILL RWSAT WATER FROM RWSP
			GI	1.0E+00	GUARANTEED FAILURE OF GRAVITY INJECTION
			HPIOO02S	4.9E-03	(HE) FAIL TO START STANDBY SAFETY INJECTION PUMP
			SG	1.0E+00	GUARANTEED FAILURE OF DECAY HEAT REMOVAL BY SG
			RSSCF2MVOD026AB-ALL	9.5E-05	RHS-MOV-026A,B FAIL TO OPEN (CCF)

Table 19.1-147 LOCA with No Mitigation System Sequence Dominant Cutsets of POS 4-3 for LPSD PRA (Sheet 4 of 4)

No	Cutsets freq.(/ry)	Percent	Cutsets	Frequency/ probability	Basic Event Description
10	3.0E-12	0.09	!LOCA4-3	9.7E-05	LOSS OF COOLANT ACCIDENT - POS4-3
			CHIOO02RWS-DP2	6.7E-02	(HE) FAIL TO REFILL RWSAT WATER FROM RWSP
			GI	1.0E+00	GUARANTEED FAILURE OF GRAVITY INJECTION
			HPIOO02S	4.9E-03	(HE) FAIL TO START STANDBY SAFETY INJECTION PUMP
			SG	1.0E+00	GUARANTEED FAILURE OF DECAY HEAT REMOVAL BY SG
			RSSCF2PMBD001AB-ALL	9.4E-05	RHS-MPP-001A,B (CS/RHR PUMP) FAIL TO RE-START (CCF)

Table 19.1-148 FLML Resulting Failure of RCS Makeup Sequence Dominant Cutsets of POS 4-3 for LPSD PRA (Sheet 1 of 4)

No	Cutsets freq.(/ry)	Percent	Cutsets	Frequency/ probability	Basic Event Description
1	1.3E-09	45.9	!FLML4-3	2.3E-04	LOSS OF RHR CAUSED BY FAILING TO MAINTAIN WATER LEVEL (POS4-2, 4-3, 8-2, 8-3)
			CVCAVCD024C	1.2E-03	RHS-AOV-024C FAIL TO CLOSE
			GI	1.0E+00	GUARANTEED FAILURE OF GRAVITY INJECTION
			HPIOO02S	4.9E-03	(HE) FAIL TO START STANDBY SAFETY INJECTION PUMP
			SG	1.0E+00	GUARANTEED FAILURE OF DECAY HEAT REMOVAL BY SG
			MC-F	1.0E+00	GUARANTEED FAILURE OF RCS MAKEUP BY CHARGING PUMP
2	1.3E-09	45.9	!FLML4-3	2.3E-04	LOSS OF RHR CAUSED BY FAILING TO MAINTAIN WATER LEVEL (POS4-2, 4-3, 8-2, 8-3)
			CVCAVCD024B	1.2E-03	RHS-AOV-024B FAIL TO CLOSE
			GI	1.0E+00	GUARANTEED FAILURE OF GRAVITY INJECTION
			HPIOO02S	4.9E-03	(HE) FAIL TO START STANDBY SAFETY INJECTION PUMP
			SG	1.0E+00	GUARANTEED FAILURE OF DECAY HEAT REMOVAL BY SG
			MC-F	1.0E+00	GUARANTEED FAILURE OF RCS MAKEUP BY CHARGING PUMP
3	1.1E-10	3.8	!FLML4-3	2.3E-04	LOSS OF RHR CAUSED BY FAILING TO MAINTAIN WATER LEVEL (POS4-2, 4-3, 8-2, 8-3)
			GI	1.0E+00	GUARANTEED FAILURE OF GRAVITY INJECTION
			HPIOO02S	4.9E-03	(HE) FAIL TO START STANDBY SAFETY INJECTION PUMP
			MC-F	1.0E+00	GUARANTEED FAILURE OF RCS MAKEUP BY CHARGING PUMP
			SGNBTSWCCF1	1.0E-04	GROUP-1 APPLICATION SOFTWARE CCF
			SG	1.0E+00	GUARANTEED FAILURE OF DECAY HEAT REMOVAL BY SG

Table 19.1-148 FLML Resulting Failure of RCS Makeup Sequence Dominant Cutsets of POS 4-3 for LPSD PRA (Sheet 2 of 4)

No	Cutsets freq.(/ry)	Percent	Cutsets	Frequency/ probability	Basic Event Description
4	4.2E-11	1.4	!FLML4-3	2.3E-04	LOSS OF RHR CAUSED BY FAILING TO MAINTAIN WATER LEVEL (POS4-2, 4-3, 8-2, 8-3)
			CVCAVCD024C	1.2E-03	RHS-AOV-024C FAIL TO CLOSE
			GI	1.0E+00	GUARANTEED FAILURE OF GRAVITY INJECTION
			HPICF2PMAD001BD-ALL	1.5E-04	SIS-MPP-001B,D (SI PUMP) FAIL TO START (CCF)
			SG	1.0E+00	GUARANTEED FAILURE OF DECAY HEAT REMOVAL BY SG
			MC-F	1.0E+00	GUARANTEED FAILURE OF RCS MAKEUP BY CHARGING PUMP
5	4.2E-11	1.4	!FLML4-3	2.3E-04	LOSS OF RHR CAUSED BY FAILING TO MAINTAIN WATER LEVEL (POS4-2, 4-3, 8-2, 8-3)
			CVCAVCD024B	1.2E-03	RHS-AOV-024B FAIL TO CLOSE
			GI	1.0E+00	GUARANTEED FAILURE OF GRAVITY INJECTION
			HPICF2PMAD001BD-ALL	1.5E-04	SIS-MPP-001B,D (SI PUMP) FAIL TO START (CCF)
			SG	1.0E+00	GUARANTEED FAILURE OF DECAY HEAT REMOVAL BY SG
			MC-F	1.0E+00	GUARANTEED FAILURE OF RCS MAKEUP BY CHARGING PUMP
6	4.5E-12	0.16	!FLML4-3	2.3E-04	LOSS OF RHR CAUSED BY FAILING TO MAINTAIN WATER LEVEL (POS4-2, 4-3, 8-2, 8-3)
			CVCAVCD024C	1.2E-03	RHS-AOV-024C FAIL TO CLOSE
			GI	1.0E+00	GUARANTEED FAILURE OF GRAVITY INJECTION
			HPICF2PMSR001BD-ALL	1.7E-05	SIS-MPP-001B,D (SI PUMP) FAIL TO RUN DURING FIRST HOUR OF OPERATION (CCF)
			SG	1.0E+00	GUARANTEED FAILURE OF DECAY HEAT REMOVAL BY SG
			MC-F	1.0E+00	GUARANTEED FAILURE OF RCS MAKEUP BY CHARGING PUMP

Table 19.1-148 FLML Resulting Failure of RCS Makeup Sequence Dominant Cutsets of POS 4-3 for LPSD PRA (Sheet 3 of 4)

No	Cutsets freq.(/ry)	Percent	Cutsets	Frequency/ probability	Basic Event Description
7	4.5E-12	0.16	!FLML4-3	2.3E-04	LOSS OF RHR CAUSED BY FAILING TO MAINTAIN WATER LEVEL (POS4-2, 4-3, 8-2, 8-3)
			CVCAVCD024B	1.2E-03	RHS-AOV-024B FAIL TO CLOSE
			GI	1.0E+00	GUARANTEED FAILURE OF GRAVITY INJECTION
			HPICF2PMSR001BD-ALL	1.7E-05	SIS-MPP-001B,D (SI PUMP) FAIL TO RUN DURING FIRST HOUR OF OPERATION (CCF)
			SG	1.0E+00	GUARANTEED FAILURE OF DECAY HEAT REMOVAL BY SG
			MC-F	1.0E+00	GUARANTEED FAILURE OF RCS MAKEUP BY CHARGING PUMP
8	3.5E-12	0.12	!FLML4-3	2.3E-04	LOSS OF RHR CAUSED BY FAILING TO MAINTAIN WATER LEVEL (POS4-2, 4-3, 8-2, 8-3)
			GI	1.0E+00	GUARANTEED FAILURE OF GRAVITY INJECTION
			HPICF2PMAD001BD-ALL	1.5E-04	SIS-MPP-001B,D (SI PUMP) FAIL TO START (CCF)
			MC-F	1.0E+00	GUARANTEED FAILURE OF RCS MAKEUP BY CHARGING PUMP
			SGNBTSWCCF1	1.0E-04	GROUP-1 APPLICATION SOFTWARE CCF
			SG	1.0E+00	GUARANTEED FAILURE OF DECAY HEAT REMOVAL BY SG
9	2.7E-12	0.09	!FLML4-3	2.3E-04	LOSS OF RHR CAUSED BY FAILING TO MAINTAIN WATER LEVEL (POS4-2, 4-3, 8-2, 8-3)
			CVCAVCD024C	1.2E-03	RHS-AOV-024C FAIL TO CLOSE
			GI	1.0E+00	GUARANTEED FAILURE OF GRAVITY INJECTION
			MC-F	1.0E+00	GUARANTEED FAILURE OF RCS MAKEUP BY CHARGING PUMP
			SG	1.0E+00	GUARANTEED FAILURE OF DECAY HEAT REMOVAL BY SG
			RWSCF4SUPR001-ALL	9.7E-06	SIS-SST-001A,B,C,D (ESS/CS STRAINER) PLUG DURING OPERATION (CCF)

Table 19.1-148 FLML Resulting Failure of RCS Makeup Sequence Dominant Cutsets of POS 4-3 for LPSD PRA (Sheet 4 of 4)

No	Cutsets freq.(/ry)	Percent	Cutsets	Frequency/ probability	Basic Event Description
10	2.7E-12	0.09	!FLML4-3	2.3E-04	LOSS OF RHR CAUSED BY FAILING TO MAINTAIN WATER LEVEL (POS4-2, 4-3, 8-2, 8-3)
			CVCAVCD024B	1.2E-03	RHS-AOV-024B FAIL TO CLOSE
			GI	1.0E+00	GUARANTEED FAILURE OF GRAVITY INJECTION
			MC-F	1.0E+00	GUARANTEED FAILURE OF RCS MAKEUP BY CHARGING PUMP
			SG	1.0E+00	GUARANTEED FAILURE OF DECAY HEAT REMOVAL BY SG
			RWSCF4SUPR001-ALL	9.7E-06	SIS-SST-001A,B,C,D (ESS/CS STRAINER) PLUG DURING OPERATION (CCF)

Table 19.1-149 LOCA Resulting Isolation Failure Sequence Dominant Cutsets of POS 4-3 for LPSD PRA (Sheet 1 of 2)

No	Cutsets freq.(/ry)	Percent	Cutsets	Frequency/ probability	Basic Event Description
1	2.1E-09	94.6	!LOCA4-3	9.7E-05	LOSS OF COOLANT ACCIDENT - POS4-3
			CHIOO02RWS-DP3	1.6E-01	(HE) FAIL TO REFILL RWSAT WATER FROM RWSP
			GI	1.0E+00	GUARANTEED FAILURE OF GRAVITY INJECTION
			HPIOO02S-DP2	5.5E-02	(HE) FAIL TO START STANDBY SAFETY INJECTION PUMP
			LOAOO02LC	2.6E-03	(HE) FAIL TO ISOLATE THE LEAKAGE TRAIN OF RHR SYSTEM
2	5.7E-11	2.5	!LOCA4-3	9.7E-05	LOSS OF COOLANT ACCIDENT - POS4-3
			CHIOO01RECOV	5.8E-02	(HE) FAIL TO START CHARGING PUMP AND SAFETY INJECTION PUMP - LOCAL ACTION
			GI	1.0E+00	GUARANTEED FAILURE OF GRAVITY INJECTION
			SGNBTSWCCF3	1.0E-05	NON-SAFETY (PSMS) APPLICATION SOFTWARE CCF
3	1.1E-11	0.48	!LOCA4-3	9.7E-05	LOSS OF COOLANT ACCIDENT - POS4-3
			GI	1.0E+00	GUARANTEED FAILURE OF GRAVITY INJECTION
			HPIOO02S-DP2	5.5E-02	(HE) FAIL TO START STANDBY SAFETY INJECTION PUMP
			LOAOO02LC	2.6E-03	(HE) FAIL TO ISOLATE THE LEAKAGE TRAIN OF RHR SYSTEM
			RWSOO04XV051	8.0E-04	(HE) MISALIGNMENT OF RWS-VLV-051 AFTER TEST OR MAINTENANCE
4	9.7E-12	0.43	!LOCA4-3	9.7E-05	LOSS OF COOLANT ACCIDENT - POS4-3
			GI	1.0E+00	GUARANTEED FAILURE OF GRAVITY INJECTION
			RTPBTSWCCF	1.0E-07	BASIC SOFTWARE CCF
5	9.5E-12	0.42	!LOCA4-3	9.7E-05	LOSS OF COOLANT ACCIDENT - POS4-3
			GI	1.0E+00	GUARANTEED FAILURE OF GRAVITY INJECTION
			HPIOO02S-DP2	5.5E-02	(HE) FAIL TO START STANDBY SAFETY INJECTION PUMP
			LOAOO02LC	2.6E-03	(HE) FAIL TO ISOLATE THE LEAKAGE TRAIN OF RHR SYSTEM
			RWSXVOD021	7.0E-04	RWS-VLV-021 FAIL TO OPEN

Table 19.1-149 LOCA Resulting Isolation Failure Sequence Dominant Cutsets of POS 4-3 for LPSD PRA (Sheet 2 of 2)

No	Cutsets freq.(/ry)	Percent	Cutsets	Frequency/ probability	Basic Event Description
6	9.5E-12	0.42	!LOCA4-3	9.7E-05	LOSS OF COOLANT ACCIDENT - POS4-3
			GI	1.0E+00	GUARANTEED FAILURE OF GRAVITY INJECTION
			HPIOO02S-DP2	5.5E-02	(HE) FAIL TO START STANDBY SAFETY INJECTION PUMP
			LOAOO02LC	2.6E-03	(HE) FAIL TO ISOLATE THE LEAKAGE TRAIN OF RHR SYSTEM
			RWSXVOD052	7.0E-04	RWS-VLV-052 FAIL TO OPEN
7	4.7E-12	0.21	!LOCA4-3	9.7E-05	LOSS OF COOLANT ACCIDENT - POS4-3
			GI	1.0E+00	GUARANTEED FAILURE OF GRAVITY INJECTION
			HPIOO02S	4.9E-03	(HE) FAIL TO START STANDBY SAFETY INJECTION PUMP
			SGNBTSWCCF3	1.0E-05	NON-SAFETY (PSMS) APPLICATION SOFTWARE CCF
8	2.5E-12	0.11	!LOCA4-3	9.7E-05	LOSS OF COOLANT ACCIDENT - POS4-3
			CHIOO02RWS-DP2	6.7E-02	(HE) FAIL TO REFILL RWSAT WATER FROM RWSP
			GI	1.0E+00	GUARANTEED FAILURE OF GRAVITY INJECTION
			HPICF2PMAD001BD-ALL	1.5E-04	SIS-MPP-001B,D (SI PUMP) FAIL TO START (CCF)
			LOAOO02LC	2.6E-03	(HE) FAIL TO ISOLATE THE LEAKAGE TRAIN OF RHR SYSTEM
9	1.8E-12	0.08	!LOCA4-3	9.7E-05	LOSS OF COOLANT ACCIDENT - POS4-3
			CHICF2MVCD031BC-ALL	1.4E-04	CVS-LCV-031B,C FAIL TO CLOSE (CCF)
			GI	1.0E+00	GUARANTEED FAILURE OF GRAVITY INJECTION
			HPIOO02S-DP2	5.5E-02	(HE) FAIL TO START STANDBY SAFETY INJECTION PUMP
			LOAOO02LC	2.6E-03	(HE) FAIL TO ISOLATE THE LEAKAGE TRAIN OF RHR SYSTEM
10	1.6E-12	0.07	!LOCA4-3	9.7E-05	LOSS OF COOLANT ACCIDENT - POS4-3
			CHIPMYR001B	1.2E-04	CVS-MPP-001B (B-CHI PUMP) FAIL TO RUN
			GI	1.0E+00	GUARANTEED FAILURE OF GRAVITY INJECTION
			HPIOO02S-DP2	5.5E-02	(HE) FAIL TO START STANDBY SAFETY INJECTION PUMP
			LOAOO02LC	2.6E-03	(HE) FAIL TO ISOLATE THE LEAKAGE TRAIN OF RHR SYSTEM

Table 19.1-150 LORH with No Mitigation System Sequence Dominant Cutsets of POS 4-3 for LPSD PRA (Sheet 1 of 3)

No	Cutsets freq.(/ry)	Percent	Cutsets	Frequency/ probability	Basic Event Description
1	1.5E-09	93.4	!LORH4-3	4.7E-06	LOSS OF RHR CAUSED BY OTHER FAILURES - POS4-3
			CHIOO02RWS-DP2	6.7E-02	(HE) FAIL TO REFILL RWSAT WATER FROM RWSP
			GI	1.0E+00	GUARANTEED FAILURE OF GRAVITY INJECTION
			HPIOO02S	4.9E-03	(HE) FAIL TO START STANDBY SAFETY INJECTION PUMP
			SG	1.0E+00	GUARANTEED FAILURE OF DECAY HEAT REMOVAL BY SG
2	1.8E-11	1.1	!LORH4-3	4.7E-06	LOSS OF RHR CAUSED BY OTHER FAILURES - POS4-3
			GI	1.0E+00	GUARANTEED FAILURE OF GRAVITY INJECTION
			HPIOO02S	4.9E-03	(HE) FAIL TO START STANDBY SAFETY INJECTION PUMP
			RWSOO04XV051	8.0E-04	(HE) MISALIGNMENT OF RWS-VLV-051 AFTER TEST OR MAINTENANCE
			SG	1.0E+00	GUARANTEED FAILURE OF DECAY HEAT REMOVAL BY SG
3	1.6E-11	0.98	!LORH4-3	4.7E-06	LOSS OF RHR CAUSED BY OTHER FAILURES - POS4-3
			GI	1.0E+00	GUARANTEED FAILURE OF GRAVITY INJECTION
			HPIOO02S	4.9E-03	(HE) FAIL TO START STANDBY SAFETY INJECTION PUMP
			RWSXVOD052	7.0E-04	RWS-VLV-052 FAIL TO OPEN
			SG	1.0E+00	GUARANTEED FAILURE OF DECAY HEAT REMOVAL BY SG
4	1.6E-11	0.98	!LORH4-3	4.7E-06	LOSS OF RHR CAUSED BY OTHER FAILURES - POS4-3
			GI	1.0E+00	GUARANTEED FAILURE OF GRAVITY INJECTION
			HPIOO02S	4.9E-03	(HE) FAIL TO START STANDBY SAFETY INJECTION PUMP
			RWSXVOD021	7.0E-04	RWS-VLV-021 FAIL TO OPEN
			SG	1.0E+00	GUARANTEED FAILURE OF DECAY HEAT REMOVAL BY SG

Table 19.1-150 LORH with No Mitigation System Sequence Dominant Cutsets of POS 4-3 for LPSD PRA (Sheet 2 of 3)

No	Cutsets freq.(/ry)	Percent	Cutsets	Frequency/ probability	Basic Event Description
5	1.3E-11	0.77	!LORH4-3	4.7E-06	LOSS OF RHR CAUSED BY OTHER FAILURES - POS4-3
			CHIOO02RWS	1.7E-02	(HE) FAIL TO REFILL RWSAT WATER FROM RWSP
			GI	1.0E+00	GUARANTEED FAILURE OF GRAVITY INJECTION
			HPICF2PMAD001BD-ALL	1.5E-04	SIS-MPP-001B,D (SI PUMP) FAIL TO START (CCF)
			SG	1.0E+00	GUARANTEED FAILURE OF DECAY HEAT REMOVAL BY SG
6	3.1E-12	0.19	!LORH4-3	4.7E-06	LOSS OF RHR CAUSED BY OTHER FAILURES - POS4-3
			CHICF2MVCD031BC-ALL	1.4E-04	CVS-LCV-031B,C FAIL TO CLOSE (CCF)
			GI	1.0E+00	GUARANTEED FAILURE OF GRAVITY INJECTION
			HPIOO02S	4.9E-03	(HE) FAIL TO START STANDBY SAFETY INJECTION PUMP
			SG	1.0E+00	GUARANTEED FAILURE OF DECAY HEAT REMOVAL BY SG
7	2.8E-12	0.17	!LORH4-3	4.7E-06	LOSS OF RHR CAUSED BY OTHER FAILURES - POS4-3
			CHIPMYR001B	1.2E-04	CVS-MPP-001B (B-CHI PUMP) FAIL TO RUN
			GI	1.0E+00	GUARANTEED FAILURE OF GRAVITY INJECTION
			HPIOO02S	4.9E-03	(HE) FAIL TO START STANDBY SAFETY INJECTION PUMP
			SG	1.0E+00	GUARANTEED FAILURE OF DECAY HEAT REMOVAL BY SG
8	2.8E-12	0.17	!LORH4-3	4.7E-06	LOSS OF RHR CAUSED BY OTHER FAILURES - POS4-3
			CHIOO01RECOV	5.8E-02	(HE) FAIL TO START CHARGING PUMP AND SAFETY INJECTION PUMP - LOCAL ACTION
			GI	1.0E+00	GUARANTEED FAILURE OF GRAVITY INJECTION
			SG	1.0E+00	GUARANTEED FAILURE OF DECAY HEAT REMOVAL BY SG
			SGNBTSWCCF3	1.0E-05	NON-SAFETY (PSMS) APPLICATION SOFTWARE CCF

Table 19.1-150 LORH with No Mitigation System Sequence Dominant Cutsets of POS 4-3 for LPSD PRA (Sheet 3 of 3)

No	Cutsets freq.(/ry)	Percent	Cutsets	Frequency/ probability	Basic Event Description
9	2.6E-12	0.16	!LORH4-3	4.7E-06	LOSS OF RHR CAUSED BY OTHER FAILURES - POS4-3
			CHICF4MVOD031-ALL	1.1E-04	CVS-LCV-031D,E,F,G FAIL TO OPEN (CCF)
			GI	1.0E+00	GUARANTEED FAILURE OF GRAVITY INJECTION
			HPIOO02S	4.9E-03	(HE) FAIL TO START STANDBY SAFETY INJECTION PUMP
			SG	1.0E+00	GUARANTEED FAILURE OF DECAY HEAT REMOVAL BY SG
10	2.3E-12	0.14	!LORH4-3	4.7E-06	LOSS OF RHR CAUSED BY OTHER FAILURES - POS4-3
			GI	1.0E+00	GUARANTEED FAILURE OF GRAVITY INJECTION
			HPIOO02S	4.9E-03	(HE) FAIL TO START STANDBY SAFETY INJECTION PUMP
			SG	1.0E+00	GUARANTEED FAILURE OF DECAY HEAT REMOVAL BY SG
			SGNBTSWCCF1	1.0E-04	GROUP-1 APPLICATION SOFTWARE CCF

Table 19.1-151 LOOP Resulting Loss of CCW Sequence Dominant Cutsets of POS 4-3 for LPSD PRA (Sheet 1 of 2)

No	Cutsets freq.(/ry)	Percent	Cutsets	Frequency/ probability	Basic Event Description
1	4.3E-10	28.4	!LOOP4-3	4.0E-04	LOSS OF OFFSITE POWER - POS4-3
			ACWOO02SC	2.2E-02	(HE) FAIL TO ESTABLISH THE ALTERNATE CCWS BY FIRE PROTECTION WATER SUPPLY SYSTEM
			GI	1.0E+00	GUARANTEED FAILURE OF GRAVITY INJECTION
			SWSCF4PMBD001-ALL	4.8E-05	EWS-MPP-001A,B,C,D (EWS PUMP) FAIL TO RE-START (CCF)
2	2.4E-10	15.6	!LOOP4-3	4.0E-04	LOSS OF OFFSITE POWER - POS4-3
			ACWOO02SC	2.2E-02	(HE) FAIL TO ESTABLISH THE ALTERNATE CCWS BY FIRE PROTECTION WATER SUPPLY SYSTEM
			CWSCF4PCBD001-ALL	2.6E-05	NCS-MPP-001A,B,C,D (CCW PUMP) FAIL TO RE-START (CCF)
			GI	1.0E+00	GUARANTEED FAILURE OF GRAVITY INJECTION
3	1.1E-10	7.4	!LOOP4-3	4.0E-04	LOSS OF OFFSITE POWER - POS4-3
			ACWOO02SC	2.2E-02	(HE) FAIL TO ESTABLISH THE ALTERNATE CCWS BY FIRE PROTECTION WATER SUPPLY SYSTEM
			GI	1.0E+00	GUARANTEED FAILURE OF GRAVITY INJECTION
			SWSCF4MVOD503-ALL	1.3E-05	EWS-MOV-503A,B,C,D FAIL TO OPEN (CCF)
4	6.4E-11	4.2	!LOOP4-3	4.0E-04	LOSS OF OFFSITE POWER - POS4-3
			EPSCF4CBSO52STL-ALL	1.6E-07	EPS 52/STLA,B,C,D (BREAKER) SPURIOUS OPEN (CCF)
			GI	1.0E+00	GUARANTEED FAILURE OF GRAVITY INJECTION
5	6.4E-11	4.2	!LOOP4-3	4.0E-04	LOSS OF OFFSITE POWER - POS4-3
			EPSCF4CBSO52LC-ALL	1.6E-07	EPS 52/LCA,B,C,D (BREAKER) SPURIOUS OPEN (CCF)
			GI	1.0E+00	GUARANTEED FAILURE OF GRAVITY INJECTION

Table 19.1-151 LOOP Resulting Loss of CCW Sequence Dominant Cutsets of POS 4-3 for LPSD PRA (Sheet 2 of 2)

No	Cutsets freq.(/ry)	Percent	Cutsets	Frequency/ probability	Basic Event Description
6	6.4E-11	4.2	!LOOP4-3	4.0E-04	LOSS OF OFFSITE POWER - POS4-3
			EPSCF4CBSO52STH-ALL	1.6E-07	EPS 52/STHA,B,C,D (BREAKER) SPURIOUS OPEN (CCF)
			GI	1.0E+00	GUARANTEED FAILURE OF GRAVITY INJECTION
7	2.9E-11	1.9	!LOOP4-3	4.0E-04	LOSS OF OFFSITE POWER - POS4-3
			CHIPMAD001B-R	1.5E-03	CVS-MPP-001B (B-CHI PUMP) FAIL TO RE-START
			GI	1.0E+00	GUARANTEED FAILURE OF GRAVITY INJECTION
			SWSCF4PMBD001-ALL	4.8E-05	EWS-MPP-001A,B,C,D (EWS PUMP) FAIL TO RE-START (CCF)
8	1.9E-11	1.3	!LOOP4-3	4.0E-04	LOSS OF OFFSITE POWER - POS4-3
			ACWMVOD325B	1.0E-03	NCS-MOV-325B FAIL TO OPEN
			GI	1.0E+00	GUARANTEED FAILURE OF GRAVITY INJECTION
			SWSCF4PMBD001-ALL	4.8E-05	EWS-MPP-001A,B,C,D (EWS PUMP) FAIL TO RE-START (CCF)
9	1.9E-11	1.3	!LOOP4-3	4.0E-04	LOSS OF OFFSITE POWER - POS4-3
			ACWMVOD324B	1.0E-03	NCS-MOV-324B FAIL TO OPEN
			GI	1.0E+00	GUARANTEED FAILURE OF GRAVITY INJECTION
			SWSCF4PMBD001-ALL	4.8E-05	EWS-MPP-001A,B,C,D (EWS PUMP) FAIL TO RE-START (CCF)
10	1.9E-11	1.3	!LOOP4-3	4.0E-04	LOSS OF OFFSITE POWER - POS4-3
			ACWMVOD321B	1.0E-03	NCS-MOV-321B FAIL TO OPEN
			GI	1.0E+00	GUARANTEED FAILURE OF GRAVITY INJECTION
			SWSCF4PMBD001-ALL	4.8E-05	EWS-MPP-001A,B,C,D (EWS PUMP) FAIL TO RE-START (CCF)

Table 19.1-152 LOOP Resulting Loss of ac Power Sequence Dominant Cutsets of POS 4-3 for LPSD PRA (Sheet 1 of 4)

No	Cutsets freq.(/ry)	Percent	Cutsets	Frequency/ probability	Basic Event Description
1	1.2E-09	90.7	!LOOP4-3	4.0E-04	LOSS OF OFFSITE POWER - POS4-3
			ACRPOS4-3-F	3.1E-01	FAILURE OF OFFSITE POWER RECOVERY (POS4-3)
			GI	1.0E+00	GUARANTEED FAILURE OF GRAVITY INJECTION
			SG	1.0E+00	GUARANTEED FAILURE OF DECAY HEAT REMOVAL BY SG
			SGNBTSWCCF3	1.0E-05	NON-SAFETY (PSMS) APPLICATION SOFTWARE CCF
2	2.1E-11	1.6	!LOOP4-3	4.0E-04	LOSS OF OFFSITE POWER - POS4-3
			ACRPOS4-3-F	3.1E-01	FAILURE OF OFFSITE POWER RECOVERY (POS4-3)
			CHIOO02P+RWS-DP2	6.8E-02	(HE) FAIL TO START STANDBY CHARGING PUMP AND REFILL RWSAT WATER FROM RWSP
			EPSCF4DLLRGTG-ALL	9.9E-04	CLASS-1E GTG A,B,C, D FAIL TO LOAD AND RUN AFTER FIRST HOUR OF OPERATION (CCF)
			GI	1.0E+00	GUARANTEED FAILURE OF GRAVITY INJECTION
			RSSOO02P	2.6E-03	(HE) FAIL TO RE-START THE RHR PUMPS WHEN THE LOOP EVENT OCCURS
			SG	1.0E+00	GUARANTEED FAILURE OF DECAY HEAT REMOVAL BY SG
3	1.2E-11	0.91	!LOOP4-3	4.0E-04	LOSS OF OFFSITE POWER - POS4-3
			ACRPOS4-3-F	3.1E-01	FAILURE OF OFFSITE POWER RECOVERY (POS4-3)
			GI	1.0E+00	GUARANTEED FAILURE OF GRAVITY INJECTION
			RTPBTSWCCF	1.0E-07	BASIC SOFTWARE CCF
			SG	1.0E+00	GUARANTEED FAILURE OF DECAY HEAT REMOVAL BY SG

Table 19.1-152 LOOP Resulting Loss of ac Power Sequence Dominant Cutsets of POS 4-3 for LPSD PRA (Sheet 2 of 4)

No	Cutsets freq.(/ry)	Percent	Cutsets	Frequency/ probability	Basic Event Description
4	5.5E-12	0.40	!LOOP4-3	4.0E-04	LOSS OF OFFSITE POWER - POS4-3
			ACRPOS4-3-F	3.1E-01	FAILURE OF OFFSITE POWER RECOVERY (POS4-3)
			EPSCF4DLLRGTG-ALL	9.9E-04	CLASS-1E GTG A,B,C, D FAIL TO LOAD AND RUN AFTER FIRST HOUR OF OPERATION (CCF)
			EPSDLLRAACB	1.9E-02	B-AAC FAIL TO LOAD AND RUN AFTER FIRST HOUR OF OPERATION
			GI	1.0E+00	GUARANTEED FAILURE OF GRAVITY INJECTION
			RSSOO02P	2.6E-03	(HE) FAIL TO RE-START THE RHR PUMPS WHEN THE LOOP EVENT OCCURS
			SG	1.0E+00	GUARANTEED FAILURE OF DECAY HEAT REMOVAL BY SG
5	4.5E-12	0.33	!LOOP4-3	4.0E-04	LOSS OF OFFSITE POWER - POS4-3
			ACRPOS4-3-F	3.1E-01	FAILURE OF OFFSITE POWER RECOVERY (POS4-3)
			CHIOO02P+RWS-DP2	6.8E-02	(HE) FAIL TO START STANDBY CHARGING PUMP AND REFILL RWSAT WATER FROM RWSP
			EPSCF4DLADGTG-ALL	2.1E-04	CLASS-1E GTG A,B,C,D FAIL TO START (CCF)
			GI	1.0E+00	GUARANTEED FAILURE OF GRAVITY INJECTION
			RSSOO02P	2.6E-03	(HE) FAIL TO RE-START THE RHR PUMPS WHEN THE LOOP EVENT OCCURS
			SG	1.0E+00	GUARANTEED FAILURE OF DECAY HEAT REMOVAL BY SG
6	4.1E-12	0.30	!LOOP4-3	4.0E-04	LOSS OF OFFSITE POWER - POS4-3
			ACRPOS4-3-F	3.1E-01	FAILURE OF OFFSITE POWER RECOVERY (POS4-3)
			EPSCF4DLLRGTG-ALL	9.9E-04	CLASS-1E GTG A,B,C, D FAIL TO LOAD AND RUN AFTER FIRST HOUR OF OPERATION (CCF)
			EPSDLLRAACB	1.9E-02	B-AAC FAIL TO LOAD AND RUN AFTER FIRST HOUR OF OPERATION
			GI	1.0E+00	GUARANTEED FAILURE OF GRAVITY INJECTION
			RSSPMBD001A-ABCD	2.0E-03	RHS-MPP-001A (A-CS/RHR PUMP) FAIL TO RE-START
			SG	1.0E+00	GUARANTEED FAILURE OF DECAY HEAT REMOVAL BY SG

Table 19.1-152 LOOP Resulting Loss of ac Power Sequence Dominant Cutsets of POS 4-3 for LPSD PRA (Sheet 3 of 4)

No	Cutsets freq.(/ry)	Percent	Cutsets	Frequency/ probability	Basic Event Description
7	3.4E-12	0.25	!LOOP4-3	4.0E-04	LOSS OF OFFSITE POWER - POS4-3
			ACRPOS4-3-F	3.1E-01	FAILURE OF OFFSITE POWER RECOVERY (POS4-3)
			CHIOO02P+RWS-DP2	6.8E-02	(HE) FAIL TO START STANDBY CHARGING PUMP AND REFILL RWSAT WATER FROM RWSP
			EPSCF4DLSRGTG-ALL	1.6E-04	CLASS-1E GTG A,B FAIL TO LOAD AND RUN DURING FIRST HOUR OF OPERATION (CCF)
			GI	1.0E+00	GUARANTEED FAILURE OF GRAVITY INJECTION
			RSSOO02P	2.6E-03	(HE) FAIL TO RE-START THE RHR PUMPS WHEN THE LOOP EVENT OCCURS
			SG	1.0E+00	GUARANTEED FAILURE OF DECAY HEAT REMOVAL BY SG
8	2.7E-12	0.20	!LOOP4-3	4.0E-04	LOSS OF OFFSITE POWER - POS4-3
			ACRPOS4-3-F	3.1E-01	FAILURE OF OFFSITE POWER RECOVERY (POS4-3)
			CHIOO02P+RWS-DP3	1.6E-01	(HE) FAIL TO START STANDBY CHARGING PUMP AND REFILL RWSAT WATER FROM RWSP
			EPSCF4DLLRGTG-ALL	9.9E-04	CLASS-1E GTG A,B,C, D FAIL TO LOAD AND RUN AFTER FIRST HOUR OF OPERATION (CCF)
			GI	1.0E+00	GUARANTEED FAILURE OF GRAVITY INJECTION
			HPIOO02S-DP2	5.5E-02	(HE) FAIL TO START STANDBY SAFETY INJECTION PUMP
			RSSOO02P	2.6E-03	(HE) FAIL TO RE-START THE RHR PUMPS WHEN THE LOOP EVENT OCCURS
			SG	1.0E+00	GUARANTEED FAILURE OF DECAY HEAT REMOVAL BY SG

Table 19.1-152 LOOP Resulting Loss of ac Power Sequence Dominant Cutsets of POS 4-3 for LPSD PRA (Sheet 4 of 4)

No	Cutsets freq.(/ry)	Percent	Cutsets	Frequency/ probability	Basic Event Description
9	2.1E-12	0.15	!LOOP4-3	4.0E-04	LOSS OF OFFSITE POWER - POS4-3
			ACRPOS4-3-F	3.1E-01	FAILURE OF OFFSITE POWER RECOVERY (POS4-3)
			EPSCF4DLLRGTG-ALL	9.9E-04	CLASS-1E GTG A,B,C, D FAIL TO LOAD AND RUN AFTER FIRST HOUR OF OPERATION (CCF)
			EPSDLLRAACB	1.9E-02	B-AAC FAIL TO LOAD AND RUN AFTER FIRST HOUR OF OPERATION
			GI	1.0E+00	GUARANTEED FAILURE OF GRAVITY INJECTION
			RSSMVOD145A-AB	1.0E-03	NCS-MOV-145A FAIL TO OPEN
			SG	1.0E+00	GUARANTEED FAILURE OF DECAY HEAT REMOVAL BY SG
10	2.0E-12	0.15	!LOOP4-3	4.0E-04	LOSS OF OFFSITE POWER - POS4-3
			ACRPOS4-3-F	3.1E-01	FAILURE OF OFFSITE POWER RECOVERY (POS4-3)
			EPSCF4DLLRGTG-ALL	9.9E-04	CLASS-1E GTG A,B,C, D FAIL TO LOAD AND RUN AFTER FIRST HOUR OF OPERATION (CCF)
			EPSDLLRAACB	1.9E-02	B-AAC FAIL TO LOAD AND RUN AFTER FIRST HOUR OF OPERATION
			GI	1.0E+00	GUARANTEED FAILURE OF GRAVITY INJECTION
			RSSMVCDCSS001A-AB	1.0E-03	CSS-MOV-001A FAIL TO CLOSE
			SG	1.0E+00	GUARANTEED FAILURE OF DECAY HEAT REMOVAL BY SG

Table 19.1-153 LOCS Resulting No Mitigation System Sequence Dominant Cutsets of POS 4-3 for LPSD PRA

No	Cutsets freq.(/ry)	Percent	Cutsets	Frequency/ probability	Basic Event Description
1	6.3E-10	76.3	!LOCS4-3	1.6E-07	LOSS OF CCW/ESW - POS4-3
			ACWOO02SC	2.2E-02	(HE) FAIL TO ESTABLISH THE ALTERNATE CCWS BY FIRE PROTECTION WATER SUPPLY SYSTEM
			GI	1.0E+00	GUARANTEED FAILURE OF GRAVITY INJECTION
2	4.3E-11	5.2	!LOCS4-3	1.6E-07	LOSS OF CCW/ESW - POS4-3
			CHIPMAD001B-R	1.5E-03	CVS-MPP-001B (B-CHI PUMP) FAIL TO RE-START
			GI	1.0E+00	GUARANTEED FAILURE OF GRAVITY INJECTION
3	2.9E-11	3.5	!LOCS4-3	1.6E-07	LOSS OF CCW/ESW - POS4-3
			ACWMVOD324B	1.0E-03	NCS-MOV-324B FAIL TO OPEN
			GI	1.0E+00	GUARANTEED FAILURE OF GRAVITY INJECTION
4	2.9E-11	3.5	!LOCS4-3	1.6E-07	LOSS OF CCW/ESW - POS4-3
			ACWMVOD322B	1.0E-03	NCS-MOV-322B FAIL TO OPEN
			GI	1.0E+00	GUARANTEED FAILURE OF GRAVITY INJECTION
5	2.9E-11	3.5	!LOCS4-3	1.6E-07	LOSS OF CCW/ESW - POS4-3
			ACWMVOD321B	1.0E-03	NCS-MOV-321B FAIL TO OPEN
			GI	1.0E+00	GUARANTEED FAILURE OF GRAVITY INJECTION
6	2.9E-11	3.5	!LOCS4-3	1.6E-07	LOSS OF CCW/ESW - POS4-3
			ACWMVCD316B	1.0E-03	NCS-MOV-316B FAIL TO CLOSE
			GI	1.0E+00	GUARANTEED FAILURE OF GRAVITY INJECTION
7	2.9E-11	3.5	!LOCS4-3	1.6E-07	LOSS OF CCW/ESW - POS4-3
			ACWMVOD325B	1.0E-03	NCS-MOV-325B FAIL TO OPEN
			GI	1.0E+00	GUARANTEED FAILURE OF GRAVITY INJECTION
8	3.4E-12	0.41	!LOCS4-3	1.6E-07	LOSS OF CCW/ESW - POS4-3
			CHIPMYR001B	1.2E-04	CVS-MPP-001B (B-CHI PUMP) FAIL TO RUN
			GI	1.0E+00	GUARANTEED FAILURE OF GRAVITY INJECTION
9	2.9E-12	0.35	!LOCS4-3	1.6E-07	LOSS OF CCW/ESW - POS4-3
			SGNBTSWCCF1	1.0E-04	GROUP-1 APPLICATION SOFTWARE CCF
			GI	1.0E+00	GUARANTEED FAILURE OF GRAVITY INJECTION
10	2.9E-12	0.35	!LOCS4-3	1.6E-07	LOSS OF CCW/ESW - POS4-3
			ACWCVCD306B	1.0E-04	NCS-VLV-306B FAIL TO CLOSE
			GI	1.0E+00	GUARANTEED FAILURE OF GRAVITY INJECTION

Table 19.1-154 LOCA Resulting Failure of RCS Makeup Sequence Dominant Cutsets of POS 4-3 for LPSD PRA (Sheet 1 of 3)

No	Cutsets freq.(/ry)	Percent	Cutsets	Frequency/ probability	Basic Event Description
1	6.5E-11	13.1	!LOCA4-3	9.7E-05	LOSS OF COOLANT ACCIDENT - POS4-3
			CHICF2MVCD031BC-ALL	1.4E-04	CVS-LCV-031B,C FAIL TO CLOSE (CCF)
			GI	1.0E+00	GUARANTEED FAILURE OF GRAVITY INJECTION
			HPIOO02S	4.9E-03	(HE) FAIL TO START STANDBY SAFETY INJECTION PUMP
			SG	1.0E+00	GUARANTEED FAILURE OF DECAY HEAT REMOVAL BY SG
2	5.7E-11	11.5	!LOCA4-3	9.7E-05	LOSS OF COOLANT ACCIDENT - POS4-3
			CHIPMYR001B	1.2E-04	CVS-MPP-001B (B-CHI PUMP) FAIL TO RUN
			GI	1.0E+00	GUARANTEED FAILURE OF GRAVITY INJECTION
			HPIOO02S	4.9E-03	(HE) FAIL TO START STANDBY SAFETY INJECTION PUMP
			SG	1.0E+00	GUARANTEED FAILURE OF DECAY HEAT REMOVAL BY SG
3	5.4E-11	10.9	!LOCA4-3	9.7E-05	LOSS OF COOLANT ACCIDENT - POS4-3
			CHICF4MVOD031-ALL	1.1E-04	CVS-LCV-031D,E,F,G FAIL TO OPEN (CCF)
			GI	1.0E+00	GUARANTEED FAILURE OF GRAVITY INJECTION
			HPIOO02S	4.9E-03	(HE) FAIL TO START STANDBY SAFETY INJECTION PUMP
			SG	1.0E+00	GUARANTEED FAILURE OF DECAY HEAT REMOVAL BY SG
4	4.7E-11	9.6	!LOCA4-3	9.7E-05	LOSS OF COOLANT ACCIDENT - POS4-3
			GI	1.0E+00	GUARANTEED FAILURE OF GRAVITY INJECTION
			HPIOO02S	4.9E-03	(HE) FAIL TO START STANDBY SAFETY INJECTION PUMP
			SG	1.0E+00	GUARANTEED FAILURE OF DECAY HEAT REMOVAL BY SG
			SGNBTSWCCF1	1.0E-04	GROUP-1 APPLICATION SOFTWARE CCF

Table 19.1-154 LOCA Resulting Failure of RCS Makeup Sequence Dominant Cutsets of POS 4-3 for LPSD PRA (Sheet 2 of 3)

No	Cutsets freq.(/ry)	Percent	Cutsets	Frequency/ probability	Basic Event Description
5	3.4E-11	6.9	!LOCA4-3	9.7E-05	LOSS OF COOLANT ACCIDENT - POS4-3
			CHIAVFC048	7.2E-05	CVS-FCV-048 FAIL TO CONTROL
			GI	1.0E+00	GUARANTEED FAILURE OF GRAVITY INJECTION
			HPIOO02S	4.9E-03	(HE) FAIL TO START STANDBY SAFETY INJECTION PUMP
			SG	1.0E+00	GUARANTEED FAILURE OF DECAY HEAT REMOVAL BY SG
6	1.1E-11	2.3	!LOCA4-3	9.7E-05	LOSS OF COOLANT ACCIDENT - POS4-3
			CHIORPRCCW071	2.4E-05	NCS-FE-071 (ORIFICE) PLUG
			GI	1.0E+00	GUARANTEED FAILURE OF GRAVITY INJECTION
			HPIOO02S	4.9E-03	(HE) FAIL TO START STANDBY SAFETY INJECTION PUMP
			SG	1.0E+00	GUARANTEED FAILURE OF DECAY HEAT REMOVAL BY SG
7	1.1E-11	2.3	!LOCA4-3	9.7E-05	LOSS OF COOLANT ACCIDENT - POS4-3
			CHIORPR003	2.4E-05	CVS-SRO-003 (ORIFICE) PLUG
			GI	1.0E+00	GUARANTEED FAILURE OF GRAVITY INJECTION
			HPIOO02S	4.9E-03	(HE) FAIL TO START STANDBY SAFETY INJECTION PUMP
			SG	1.0E+00	GUARANTEED FAILURE OF DECAY HEAT REMOVAL BY SG
8	1.1E-11	2.3	!LOCA4-3	9.7E-05	LOSS OF COOLANT ACCIDENT - POS4-3
			CHIORPRCCW077	2.4E-05	NCS-FE-077 (ORIFICE) PLUG
			GI	1.0E+00	GUARANTEED FAILURE OF GRAVITY INJECTION
			HPIOO02S	4.9E-03	(HE) FAIL TO START STANDBY SAFETY INJECTION PUMP
			SG	1.0E+00	GUARANTEED FAILURE OF DECAY HEAT REMOVAL BY SG

Table 19.1-154 LOCA Resulting Failure of RCS Makeup Sequence Dominant Cutsets of POS 4-3 for LPSD PRA (Sheet 3 of 3)

No	Cutsets freq.(/ry)	Percent	Cutsets	Frequency/ probability	Basic Event Description
9	1.1E-11	2.3	!LOCA4-3	9.7E-05	LOSS OF COOLANT ACCIDENT - POS4-3
			CHIORPR048	2.4E-05	CVS-FE-048 (ORIFICE) PLUG
			GI	1.0E+00	GUARANTEED FAILURE OF GRAVITY INJECTION
			HPIOO02S	4.9E-03	(HE) FAIL TO START STANDBY SAFETY INJECTION PUMP
			SG	1.0E+00	GUARANTEED FAILURE OF DECAY HEAT REMOVAL BY SG
10	1.1E-11	2.3	!LOCA4-3	9.7E-05	LOSS OF COOLANT ACCIDENT - POS4-3
			CWSORPR039	2.4E-05	NCS-FE-039 (ORIFICE) PLUG
			GI	1.0E+00	GUARANTEED FAILURE OF GRAVITY INJECTION
			HPIOO02S	4.9E-03	(HE) FAIL TO START STANDBY SAFETY INJECTION PUMP
			SG	1.0E+00	GUARANTEED FAILURE OF DECAY HEAT REMOVAL BY SG

Table 19.1-155 LOCA Resulting Failure of RCS Makeup Sequence Dominant Cutsets of POS 8-1 for LPSD PRA (Sheet 1 of 3)

No	Cutsets freq.(/ry)	Percent	Cutsets	Frequency/ probability	Basic Event Description
1	2.3E-08	89.8	!LOCA8-1	1.6E-04	LOSS OF COOLANT ACCIDENT - POS8-1
			CHIOO02P	2.6E-03	(HE) FAIL TO START STANDBY CHARGING PUMP
			GI	1.0E+00	GUARANTEED FAILURE OF GRAVITY INJECTION
			HPIOO02S-DP2	5.5E-02	(HE) FAIL TO START STANDBY SAFETY INJECTION PUMP
			SG	1.0E+00	GUARANTEED FAILURE OF DECAY HEAT REMOVAL BY SG
2	1.6E-09	6.3	!LOCA8-1	1.6E-04	LOSS OF COOLANT ACCIDENT - POS8-1
			CHIPMBD001A	2.0E-03	CVS-MPP-001A (A-CHI PUMP) FAIL TO START
			GI	1.0E+00	GUARANTEED FAILURE OF GRAVITY INJECTION
			HPIOO02S	4.9E-03	(HE) FAIL TO START STANDBY SAFETY INJECTION PUMP
			SG	1.0E+00	GUARANTEED FAILURE OF DECAY HEAT REMOVAL BY SG
3	1.1E-10	0.43	!LOCA8-1	1.6E-04	LOSS OF COOLANT ACCIDENT - POS8-1
			CHICF2MVCD031BC-ALL	1.4E-04	CVS-LCV-031B,C FAIL TO CLOSE (CCF)
			GI	1.0E+00	GUARANTEED FAILURE OF GRAVITY INJECTION
			HPIOO02S	4.9E-03	(HE) FAIL TO START STANDBY SAFETY INJECTION PUMP
			SG	1.0E+00	GUARANTEED FAILURE OF DECAY HEAT REMOVAL BY SG
4	9.5E-11	0.38	!LOCA8-1	1.6E-04	LOSS OF COOLANT ACCIDENT - POS8-1
			CHIPMYR001A	1.2E-04	CVS-MPP-001A (A-CHI PUMP) FAIL TO RUN
			GI	1.0E+00	GUARANTEED FAILURE OF GRAVITY INJECTION
			HPIOO02S	4.9E-03	(HE) FAIL TO START STANDBY SAFETY INJECTION PUMP
			SG	1.0E+00	GUARANTEED FAILURE OF DECAY HEAT REMOVAL BY SG

Table 19.1-155 LOCA Resulting Failure of RCS Makeup Sequence Dominant Cutsets of POS 8-1 for LPSD PRA (Sheet 2 of 3)

No	Cutsets freq.(/ry)	Percent	Cutsets	Frequency/ probability	Basic Event Description
5	9.0E-11	0.36	!LOCA8-1	1.6E-04	LOSS OF COOLANT ACCIDENT - POS8-1
			CHICF4MVOD031-ALL	1.1E-04	CVS-LCV-031D,E,F,G FAIL TO OPEN (CCF)
			GI	1.0E+00	GUARANTEED FAILURE OF GRAVITY INJECTION
			HPIOO02S	4.9E-03	(HE) FAIL TO START STANDBY SAFETY INJECTION PUMP
			SG	1.0E+00	GUARANTEED FAILURE OF DECAY HEAT REMOVAL BY SG
6	7.9E-11	0.31	!LOCA8-1	1.6E-04	LOSS OF COOLANT ACCIDENT - POS8-1
			GI	1.0E+00	GUARANTEED FAILURE OF GRAVITY INJECTION
			HPIOO02S	4.9E-03	(HE) FAIL TO START STANDBY SAFETY INJECTION PUMP
			SG	1.0E+00	GUARANTEED FAILURE OF DECAY HEAT REMOVAL BY SG
			SGNBTSWCCF1	1.0E-04	GROUP-1 APPLICATION SOFTWARE CCF
7	6.3E-11	0.25	!LOCA8-1	1.6E-04	LOSS OF COOLANT ACCIDENT - POS8-1
			CHIOO02P	2.6E-03	(HE) FAIL TO START STANDBY CHARGING PUMP
			GI	1.0E+00	GUARANTEED FAILURE OF GRAVITY INJECTION
			HPICF2PMAD001AC-ALL	1.5E-04	SIS-MPP-001A,C (SI PUMP) FAIL TO START (CCF)
			SG	1.0E+00	GUARANTEED FAILURE OF DECAY HEAT REMOVAL BY SG
8	5.7E-11	0.23	!LOCA8-1	1.6E-04	LOSS OF COOLANT ACCIDENT - POS8-1
			CHIAVFC048	7.2E-05	CVS-FCV-048 FAIL TO CONTROL
			GI	1.0E+00	GUARANTEED FAILURE OF GRAVITY INJECTION
			HPIOO02S	4.9E-03	(HE) FAIL TO START STANDBY SAFETY INJECTION PUMP
			SG	1.0E+00	GUARANTEED FAILURE OF DECAY HEAT REMOVAL BY SG

Table 19.1-155 LOCA Resulting Failure of RCS Makeup Sequence Dominant Cutsets of POS 8-1 for LPSD PRA (Sheet 3 of 3)

No	Cutsets freq.(/ry)	Percent	Cutsets	Frequency/ probability	Basic Event Description
9	5.0E-11	0.20	!LOCA8-1	1.6E-04	LOSS OF COOLANT ACCIDENT - POS8-1
			CHIPMBD001A	2.0E-03	CVS-MPP-001A (A-CHI PUMP) FAIL TO START
			GI	1.0E+00	GUARANTEED FAILURE OF GRAVITY INJECTION
			HPICF2PMAD001AC-ALL	1.5E-04	SIS-MPP-001A,C (SI PUMP) FAIL TO START (CCF)
			SG	1.0E+00	GUARANTEED FAILURE OF DECAY HEAT REMOVAL BY SG
10	1.9E-11	0.08	!LOCA8-1	1.6E-04	LOSS OF COOLANT ACCIDENT - POS8-1
			GI	1.0E+00	GUARANTEED FAILURE OF GRAVITY INJECTION
			SG	1.0E+00	GUARANTEED FAILURE OF DECAY HEAT REMOVAL BY SG
			SWSCF3PMYR001ABC-ALL	1.2E-07	EWS-MPP-001A,B,C (EWS PUMP) FAIL TO RUN (CCF)

Table 19.1-156 LOOP with Success of ac Power Supply Sequence Dominant Cutsets of POS 8-1 for LPSD PRA (Sheet 1 of 3)

No	Cutsets freq.(/ry)	Percent	Cutsets	Frequency/ probability	Basic Event Description
1	1.5E-08	85.2	!LOOP8-1	6.7E-04	LOSS OF OFFSITE POWER - POS8-1
			CHIOO02P+RWS-DP3	1.6E-01	(HE) FAIL TO START STANDBY CHARGING PUMP AND REFILL RWSAT WATER FROM RWSP
			GI	1.0E+00	GUARANTEED FAILURE OF GRAVITY INJECTION
			HPIOO02S-DP2	5.5E-02	(HE) FAIL TO START STANDBY SAFETY INJECTION PUMP
			RSSOO02P	2.6E-03	(HE) FAIL TO RE-START THE RHR PUMPS WHEN THE LOOP EVENT OCCURS
			SG	1.0E+00	GUARANTEED FAILURE OF DECAY HEAT REMOVAL BY SG
2	1.9E-10	1.1	!LOOP8-1	6.7E-04	LOSS OF OFFSITE POWER - POS8-1
			CHIPMBD001A	2.0E-03	CVS-MPP-001A (A-CHI PUMP) FAIL TO START
			GI	1.0E+00	GUARANTEED FAILURE OF GRAVITY INJECTION
			HPIOO02S-DP2	5.5E-02	(HE) FAIL TO START STANDBY SAFETY INJECTION PUMP
			RSSOO02P	2.6E-03	(HE) FAIL TO RE-START THE RHR PUMPS WHEN THE LOOP EVENT OCCURS
			SG	1.0E+00	GUARANTEED FAILURE OF DECAY HEAT REMOVAL BY SG
3	8.1E-11	0.46	!LOOP8-1	6.7E-04	LOSS OF OFFSITE POWER - POS8-1
			GI	1.0E+00	GUARANTEED FAILURE OF GRAVITY INJECTION
			SG	1.0E+00	GUARANTEED FAILURE OF DECAY HEAT REMOVAL BY SG
			SWSCF3PMYR001ABC-ALL	1.2E-07	EWS-MPP-001A,B,C (EWS PUMP) FAIL TO RUN (CCF)

Table 19.1-156 LOOP with Success of ac Power Supply Sequence Dominant Cutsets of POS 8-1 for LPSD PRA (Sheet 2 of 3)

No	Cutsets freq.(/ry)	Percent	Cutsets	Frequency/ probability	Basic Event Description
4	7.5E-11	0.43	!LOOP8-1	6.7E-04	LOSS OF OFFSITE POWER - POS8-1
			GI	1.0E+00	GUARANTEED FAILURE OF GRAVITY INJECTION
			HPIOO02S-DP2	5.5E-02	(HE) FAIL TO START STANDBY SAFETY INJECTION PUMP
			RSSOO02P	2.6E-03	(HE) FAIL TO RE-START THE RHR PUMPS WHEN THE LOOP EVENT OCCURS
			RWSOO04XV051	8.0E-04	(HE) MISALIGNMENT OF RWS-VLV-051 AFTER TEST OR MAINTENANCE
			SG	1.0E+00	GUARANTEED FAILURE OF DECAY HEAT REMOVAL BY SG
5	6.5E-11	0.38	!LOOP8-1	6.7E-04	LOSS OF OFFSITE POWER - POS8-1
			GI	1.0E+00	GUARANTEED FAILURE OF GRAVITY INJECTION
			HPIOO02S-DP2	5.5E-02	(HE) FAIL TO START STANDBY SAFETY INJECTION PUMP
			RSSOO02P	2.6E-03	(HE) FAIL TO RE-START THE RHR PUMPS WHEN THE LOOP EVENT OCCURS
			RWSXVOD021	7.0E-04	RWS-VLV-021 FAIL TO OPEN
			SG	1.0E+00	GUARANTEED FAILURE OF DECAY HEAT REMOVAL BY SG
6	6.5E-11	0.38	!LOOP8-1	6.7E-04	LOSS OF OFFSITE POWER - POS8-1
			GI	1.0E+00	GUARANTEED FAILURE OF GRAVITY INJECTION
			HPIOO02S-DP2	5.5E-02	(HE) FAIL TO START STANDBY SAFETY INJECTION PUMP
			RSSOO02P	2.6E-03	(HE) FAIL TO RE-START THE RHR PUMPS WHEN THE LOOP EVENT OCCURS
			RWSXVOD052	7.0E-04	RWS-VLV-052 FAIL TO OPEN
			SG	1.0E+00	GUARANTEED FAILURE OF DECAY HEAT REMOVAL BY SG

Table 19.1-156 LOOP with Success of ac Power Supply Sequence Dominant Cutsets of POS 8-1 for LPSD PRA (Sheet 3 of 3)

No	Cutsets freq.(/ry)	Percent	Cutsets	Frequency/ probability	Basic Event Description
7	5.7E-11	0.33	!LOOP8-1	6.7E-04	LOSS OF OFFSITE POWER - POS8-1
			EPSCF3DLLRGTG-23	5.1E-04	CLASS-1E GTG B,C FAIL TO LOAD AND RUN AFTER FIRST HOUR OF OPERATION (CCF)
			GI	1.0E+00	GUARANTEED FAILURE OF GRAVITY INJECTION
			SG	1.0E+00	GUARANTEED FAILURE OF DECAY HEAT REMOVAL BY SG
			SWSSTPRST003A	1.7E-04	EWS-SST-003A (STRAINER) PLUG
8	4.5E-11	0.26	!LOOP8-1	6.7E-04	LOSS OF OFFSITE POWER - POS8-1
			CWSCF3PCYR001ABC-ALL	6.7E-08	NCS-MPP-001A,B,C (CCW PUMP) FAIL TO RUN (CCF)
			GI	1.0E+00	GUARANTEED FAILURE OF GRAVITY INJECTION
			SG	1.0E+00	GUARANTEED FAILURE OF DECAY HEAT REMOVAL BY SG
9	4.1E-11	0.23	!LOOP8-1	6.7E-04	LOSS OF OFFSITE POWER - POS8-1
			EPSCF3DLLRGTG-23	5.1E-04	CLASS-1E GTG B,C FAIL TO LOAD AND RUN AFTER FIRST HOUR OF OPERATION (CCF)
			GI	1.0E+00	GUARANTEED FAILURE OF GRAVITY INJECTION
			SG	1.0E+00	GUARANTEED FAILURE OF DECAY HEAT REMOVAL BY SG
			SWSPMYR001A-ABC	1.2E-04	EWS-MPP-001A (A-EWS PUMP) FAIL TO RUN
10	3.3E-11	0.19	!LOOP8-1	6.7E-04	LOSS OF OFFSITE POWER - POS8-1
			EPSDLLREGTGA-ABC	1.9E-02	A-CLASS 1E GTG FAIL TO LOAD AND RUN AFTER FIRST HOUR OF OPERATION
			EPSOO02RDG	2.1E-02	(HE) FAIL TO CONNECT THE ALTERNATE AC POWER SOURCE TO CLASS 1E BUS
			GI	1.0E+00	GUARANTEED FAILURE OF GRAVITY INJECTION
			HPIOO02S-DP2	5.5E-02	(HE) FAIL TO START STANDBY SAFETY INJECTION PUMP
			RSSOO02P	2.6E-03	(HE) FAIL TO RE-START THE RHR PUMPS WHEN THE LOOP EVENT OCCURS
			SG	1.0E+00	GUARANTEED FAILURE OF DECAY HEAT REMOVAL BY SG

Table 19.1-157 LOOP Resulting SBO Sequence Dominant Cutsets of POS 8-1 for LPSD PRA (Sheet 1 of 2)

No	Cutsets freq.(/ry)	Percent	Cutsets	Frequency/ probability	Basic Event Description
1	2.0E-09	21.8	!LOOP8-1	6.7E-04	LOSS OF OFFSITE POWER - POS8-1
			ACRPOS8-1-F	1.3E-01	FAILURE OF OFFSITE POWER RECOVERY (POS8-1)
			EPSCF3DLLRGTG-ALL	1.1E-03	CLASS-1E GTG A,B,C FAIL TO LOAD AND RUN AFTER FIRST HOUR OF OPERATION (CCF)
			EPSOO02RDG	2.1E-02	(HE) FAIL TO CONNECT THE ALTERNATE AC POWER SOURCE TO CLASS 1E BUS
2	1.7E-09	18.2	!LOOP8-1	6.7E-04	LOSS OF OFFSITE POWER - POS8-1
			ACRPOS8-1-F	1.3E-01	FAILURE OF OFFSITE POWER RECOVERY (POS8-1)
			EPSCF3DLLRGTG-ALL	1.1E-03	CLASS-1E GTG A,B,C FAIL TO LOAD AND RUN AFTER FIRST HOUR OF OPERATION (CCF)
			EPSDLLRAACA	1.9E-02	A-AAC FAIL TO LOAD AND RUN AFTER FIRST HOUR OF OPERATION
3	4.6E-10	4.9	!LOOP8-1	6.7E-04	LOSS OF OFFSITE POWER - POS8-1
			ACRPOS8-1-F	1.3E-01	FAILURE OF OFFSITE POWER RECOVERY (POS8-1)
			EPSCF3DLLRGTG-ALL	1.1E-03	CLASS-1E GTG A,B,C FAIL TO LOAD AND RUN AFTER FIRST HOUR OF OPERATION (CCF)
			EPSDLADAACA	5.0E-03	A-AAC FAIL TO START
4	4.5E-10	4.8	!LOOP8-1	6.7E-04	LOSS OF OFFSITE POWER - POS8-1
			ACRPOS8-1-F	1.3E-01	FAILURE OF OFFSITE POWER RECOVERY (POS8-1)
			EPSCBFO52UAT-ABC	5.2E-06	EPS 52/UATA,B,C (BREAKER) FAIL TO OPEN (CCF)
5	4.5E-10	4.8	!LOOP8-1	6.7E-04	LOSS OF OFFSITE POWER - POS8-1
			ACRPOS8-1-F	1.3E-01	FAILURE OF OFFSITE POWER RECOVERY (POS8-1)
			EPSCBFO52RAT-ABC	5.2E-06	EPS 52/RATA,B,C (BREAKER) FAIL TO OPEN (CCF)
6	4.3E-10	4.6	!LOOP8-1	6.7E-04	LOSS OF OFFSITE POWER - POS8-1
			ACRPOS8-1-F	1.3E-01	FAILURE OF OFFSITE POWER RECOVERY (POS8-1)
			EPSCF3DLADGTG-ALL	2.4E-04	CLASS-1E GTG A,B,C FAIL TO START (CCF)
			EPSOO02RDG	2.1E-02	(HE) FAIL TO CONNECT THE ALTERNATE AC POWER SOURCE TO CLASS 1E BUS

Table 19.1-157 LOOP Resulting SBO Sequence Dominant Cutsets of POS 8-1 for LPSD PRA (Sheet 2 of 2)

No	Cutsets freq.(/ry)	Percent	Cutsets	Frequency/ probability	Basic Event Description
7	3.6E-10	3.9	!LOOP8-1	6.7E-04	LOSS OF OFFSITE POWER - POS8-1
			ACRPOS8-1-F	1.3E-01	FAILURE OF OFFSITE POWER RECOVERY (POS8-1)
			EPSCF3DLADGTG-ALL	2.4E-04	CLASS-1E GTG A,B,C FAIL TO START (CCF)
			EPSDLLRAACA	1.9E-02	A-AAC FAIL TO LOAD AND RUN AFTER FIRST HOUR OF OPERATION
8	3.2E-10	3.4	!LOOP8-1	6.7E-04	LOSS OF OFFSITE POWER - POS8-1
			ACRPOS8-1-F	1.3E-01	FAILURE OF OFFSITE POWER RECOVERY (POS8-1)
			EPSCF3DLSRGTG-ALL	1.8E-04	CLASS-1E GTG A,B,C FAIL TO LOAD AND RUN DURING FIRST HOUR OF OPERATION (CCF)
			EPSOO02RDG	2.1E-02	(HE) FAIL TO CONNECT THE ALTERNATE AC POWER SOURCE TO CLASS 1E BUS
9	2.8E-10	3.0	!LOOP8-1	6.7E-04	LOSS OF OFFSITE POWER - POS8-1
			ACRPOS8-1-F	1.3E-01	FAILURE OF OFFSITE POWER RECOVERY (POS8-1)
			EPSCF3DLLRGTG-ALL	1.1E-03	CLASS-1E GTG A,B,C FAIL TO LOAD AND RUN AFTER FIRST HOUR OF OPERATION (CCF)
			EPSSEFFAACA	3.0E-03	A-AAC SEQUENCER FAIL TO OPERATE
10	2.7E-10	2.9	!LOOP8-1	6.7E-04	LOSS OF OFFSITE POWER - POS8-1
			ACRPOS8-1-F	1.3E-01	FAILURE OF OFFSITE POWER RECOVERY (POS8-1)
			EPSCF3DLSRGTG-ALL	1.8E-04	CLASS-1E GTG A,B,C FAIL TO LOAD AND RUN DURING FIRST HOUR OF OPERATION (CCF)
			EPSDLLRAACA	1.9E-02	A-AAC FAIL TO LOAD AND RUN AFTER FIRST HOUR OF OPERATION

Table 19.1-158 LOCS Resulting No Mitigation System Sequence Dominant Cutsets of POS 8-1 for LPSD PRA

No	Cutsets freq.(/ry)	Percent	Cutsets	Frequency/ probability	Basic Event Description
1	6.2E-09	76.3	!LOCS8-1	2.8E-07	LOSS OF CCW/ESW - POS8-1
			ACWOO02SC	2.2E-02	(HE) FAIL TO ESTABLISH THE ALTERNATE CCWS BY FIRE PROTECTION WATER SUPPLY SYSTEM
			GI	1.0E+00	GUARANTEED FAILURE OF GRAVITY INJECTION
2	4.2E-10	5.2	!LOCS8-1	2.8E-07	LOSS OF CCW/ESW - POS8-1
			CHIPMAD001A	1.5E-03	CVS-MPP-001A (A-CHI PUMP) FAIL TO START
			GI	1.0E+00	GUARANTEED FAILURE OF GRAVITY INJECTION
3	2.8E-10	3.5	!LOCS8-1	2.8E-07	LOSS OF CCW/ESW - POS8-1
			ACWMVOD325A	1.0E-03	NCS-MOV-325A FAIL TO OPEN
			GI	1.0E+00	GUARANTEED FAILURE OF GRAVITY INJECTION
4	2.8E-10	3.5	!LOCS8-1	2.8E-07	LOSS OF CCW/ESW - POS8-1
			ACWMVOD322A	1.0E-03	NCS-MOV-322A FAIL TO OPEN
			GI	1.0E+00	GUARANTEED FAILURE OF GRAVITY INJECTION
5	2.8E-10	3.5	!LOCS8-1	2.8E-07	LOSS OF CCW/ESW - POS8-1
			ACWMVCD316A	1.0E-03	NCS-MOV-316A FAIL TO CLOSE
			GI	1.0E+00	GUARANTEED FAILURE OF GRAVITY INJECTION
6	2.8E-10	3.5	!LOCS8-1	2.8E-07	LOSS OF CCW/ESW - POS8-1
			ACWMVOD321A	1.0E-03	NCS-MOV-321A FAIL TO OPEN
			GI	1.0E+00	GUARANTEED FAILURE OF GRAVITY INJECTION
7	2.8E-10	3.5	!LOCS8-1	2.8E-07	LOSS OF CCW/ESW - POS8-1
			ACWMVOD324A	1.0E-03	NCS-MOV-324A FAIL TO OPEN
			GI	1.0E+00	GUARANTEED FAILURE OF GRAVITY INJECTION
8	3.3E-11	0.4	!LOCS8-1	2.8E-07	LOSS OF CCW/ESW - POS8-1
			CHIPMYR001A	1.2E-04	CVS-MPP-001A (A-CHI PUMP) FAIL TO RUN
			GI	1.0E+00	GUARANTEED FAILURE OF GRAVITY INJECTION
9	2.8E-11	0.4	!LOCS8-1	2.8E-07	LOSS OF CCW/ESW - POS8-1
			ACWCVCD306A	1.0E-04	NCS-VLV-306A FAIL TO CLOSE
			GI	1.0E+00	GUARANTEED FAILURE OF GRAVITY INJECTION
10	2.8E-11	0.4	!LOCS8-1	2.8E-07	LOSS OF CCW/ESW - POS8-1
			SGNBTSWCCF1	1.0E-04	GROUP-1 APPLICATION SOFTWARE CCF
			GI	1.0E+00	GUARANTEED FAILURE OF GRAVITY INJECTION

Table 19.1-159 LOCA with Mitigation System Sequence Dominant Cutsets of POS 8-1 for LPSD PRA (Sheet 1 of 3)

No	Cutsets freq.(/ry)	Percent	Cutsets	Frequency/ probability	Basic Event Description
1	5.3E-09	89.8	!LOCA8-1	1.6E-04	LOSS OF COOLANT ACCIDENT - POS8-1
			CHIOO02RWS-DP3	1.6E-01	(HE) FAIL TO REFILL RWSAT WATER FROM RWSP
			GI	1.0E+00	GUARANTEED FAILURE OF GRAVITY INJECTION
			HPIOO02S-DP2	5.5E-02	(HE) FAIL TO START STANDBY SAFETY INJECTION PUMP
			RSSOO02LINE+P	3.8E-03	(HE) FAIL TO ESTABLISH RHR INJECTION LINE AND START STANBY PUMP
			SG	1.0E+00	GUARANTEED FAILURE OF DECAY HEAT REMOVAL BY SG
2	1.1E-10	1.8	!LOCA8-1	1.6E-04	LOSS OF COOLANT ACCIDENT - POS8-1
			CHIOO02RWS-DP2	6.7E-02	(HE) FAIL TO REFILL RWSAT WATER FROM RWSP
			GI	1.0E+00	GUARANTEED FAILURE OF GRAVITY INJECTION
			HPIOO02S	4.9E-03	(HE) FAIL TO START STANDBY SAFETY INJECTION PUMP
			RSSPMBD001C	2.0E-03	RHS-MPP-001C (C-CS/RHR PUMP) FAIL TO START
			SG	1.0E+00	GUARANTEED FAILURE OF DECAY HEAT REMOVAL BY SG
3	5.3E-11	0.89	!LOCA8-1	1.6E-04	LOSS OF COOLANT ACCIDENT - POS8-1
			CHIOO02RWS-DP2	6.7E-02	(HE) FAIL TO REFILL RWSAT WATER FROM RWSP
			GI	1.0E+00	GUARANTEED FAILURE OF GRAVITY INJECTION
			HPIOO02S	4.9E-03	(HE) FAIL TO START STANDBY SAFETY INJECTION PUMP
			RSSMVOD145C	1.0E-03	NCS-MOV-145C FAIL TO OPEN
			SG	1.0E+00	GUARANTEED FAILURE OF DECAY HEAT REMOVAL BY SG

Table 19.1-159 LOCA with Mitigation System Sequence Dominant Cutsets of POS 8-1 for LPSD PRA (Sheet 2 of 3)

No	Cutsets freq.(/ry)	Percent	Cutsets	Frequency/ probability	Basic Event Description
4	5.3E-11	0.9	!LOCA8-1	1.6E-04	LOSS OF COOLANT ACCIDENT - POS8-1
			CHIOO02RWS-DP2	6.7E-02	(HE) FAIL TO REFILL RWSAT WATER FROM RWSP
			GI	1.0E+00	GUARANTEED FAILURE OF GRAVITY INJECTION
			HPIOO02S	4.9E-03	(HE) FAIL TO START STANDBY SAFETY INJECTION PUMP
			RSSMVOD026C	1.0E-03	RHS-MOV-026C FAIL TO OPEN
			SG	1.0E+00	GUARANTEED FAILURE OF DECAY HEAT REMOVAL BY SG
5	5.3E-11	0.9	!LOCA8-1	1.6E-04	LOSS OF COOLANT ACCIDENT - POS8-1
			CHIOO02RWS-DP2	6.7E-02	(HE) FAIL TO REFILL RWSAT WATER FROM RWSP
			GI	1.0E+00	GUARANTEED FAILURE OF GRAVITY INJECTION
			HPIOO02S	4.9E-03	(HE) FAIL TO START STANDBY SAFETY INJECTION PUMP
			RSSMVCDCSS001C	1.0E-03	CSS-MOV-001C FAIL TO CLOSE
			SG	1.0E+00	GUARANTEED FAILURE OF DECAY HEAT REMOVAL BY SG
6	5.3E-11	0.9	!LOCA8-1	1.6E-04	LOSS OF COOLANT ACCIDENT - POS8-1
			CHIOO02RWS-DP2	6.7E-02	(HE) FAIL TO REFILL RWSAT WATER FROM RWSP
			GI	1.0E+00	GUARANTEED FAILURE OF GRAVITY INJECTION
			HPIOO02S	4.9E-03	(HE) FAIL TO START STANDBY SAFETY INJECTION PUMP
			RSSMVOD021C	1.0E-03	RHS-MOV-021C FAIL TO OPEN
			SG	1.0E+00	GUARANTEED FAILURE OF DECAY HEAT REMOVAL BY SG
7	5.3E-11	0.9	!LOCA8-1	1.6E-04	LOSS OF COOLANT ACCIDENT - POS8-1
			CHIOO02RWS-DP2	6.7E-02	(HE) FAIL TO REFILL RWSAT WATER FROM RWSP
			GI	1.0E+00	GUARANTEED FAILURE OF GRAVITY INJECTION
			HPIOO02S	4.9E-03	(HE) FAIL TO START STANDBY SAFETY INJECTION PUMP
			RSSMVODRHS001C	1.0E-03	RHS-MOV-001C FAIL TO OPEN
			SG	1.0E+00	GUARANTEED FAILURE OF DECAY HEAT REMOVAL BY SG

Table 19.1-159 LOCA with Mitigation System Sequence Dominant Cutsets of POS 8-1 for LPSD PRA (Sheet 3 of 3)

No	Cutsets freq.(/ry)	Percent	Cutsets	Frequency/ probability	Basic Event Description
8	5.3E-11	0.9	!LOCA8-1	1.6E-04	LOSS OF COOLANT ACCIDENT - POS8-1
			CHIOO02RWS-DP2	6.7E-02	(HE) FAIL TO REFILL RWSAT WATER FROM RWSP
			GI	1.0E+00	GUARANTEED FAILURE OF GRAVITY INJECTION
			HPIOO02S	4.9E-03	(HE) FAIL TO START STANDBY SAFETY INJECTION PUMP
			RSSMVOD002C	1.0E-03	RHS-MOV-002C FAIL TO OPEN
			SG	1.0E+00	GUARANTEED FAILURE OF DECAY HEAT REMOVAL BY SG
9	2.7E-11	0.5	!LOCA8-1	1.6E-04	LOSS OF COOLANT ACCIDENT - POS8-1
			GI	1.0E+00	GUARANTEED FAILURE OF GRAVITY INJECTION
			HPIOO02S-DP2	5.5E-02	(HE) FAIL TO START STANDBY SAFETY INJECTION PUMP
			RSSOO02LINE+P	3.8E-03	(HE) FAIL TO ESTABLISH RHR INJECTION LINE AND START STANBY PUMP
			RWSOO04XV051	8.0E-04	(HE) MISALIGNMENT OF RWS-VLV-051 AFTER TEST OR MAINTENANCE
			SG	1.0E+00	GUARANTEED FAILURE OF DECAY HEAT REMOVAL BY SG
10	2.3E-11	0.4	!LOCA8-1	1.6E-04	LOSS OF COOLANT ACCIDENT - POS8-1
			GI	1.0E+00	GUARANTEED FAILURE OF GRAVITY INJECTION
			HPIOO02S-DP2	5.5E-02	(HE) FAIL TO START STANDBY SAFETY INJECTION PUMP
			RSSOO02LINE+P	3.8E-03	(HE) FAIL TO ESTABLISH RHR INJECTION LINE AND START STANBY PUMP
			RWSXVOD052	7.0E-04	RWS-VLV-052 FAIL TO OPEN
			SG	1.0E+00	GUARANTEED FAILURE OF DECAY HEAT REMOVAL BY SG

Table 19.1-160 LOOP Resulting Loss of CCW Sequence Dominant Cutsets of POS 8-1 for LPSD PRA (Sheet 1 of 2)

No	Cutsets freq.(/ry)	Percent	Cutsets	Frequency/ probability	Basic Event Description
1	8.9E-10	21.2	!LOOP8-1	6.7E-04	LOSS OF OFFSITE POWER - POS8-1
			ACWOO02SC	2.2E-02	(HE) FAIL TO ESTABLISH THE ALTERNATE CCWS BY FIRE PROTECTION WATER SUPPLY SYSTEM
			GI	1.0E+00	GUARANTEED FAILURE OF GRAVITY INJECTION
			SWSCF3PMBD001ABC-ALL	6.0E-05	EWS-MPP-001A,B,C (ESW PUMP) FAIL TO RE-START (CCF)
2	4.9E-10	11.7	!LOOP8-1	6.7E-04	LOSS OF OFFSITE POWER - POS8-1
			ACWOO02SC	2.2E-02	(HE) FAIL TO ESTABLISH THE ALTERNATE CCWS BY FIRE PROTECTION WATER SUPPLY SYSTEM
			CWSCF3PCBD001ABC-ALL	3.3E-05	NCS-MPP-001A,B,C (CCW PUMP) FAIL TO RE-START (CCF)
			GI	1.0E+00	GUARANTEED FAILURE OF GRAVITY INJECTION
3	3.7E-10	8.9	!LOOP8-1	6.7E-04	LOSS OF OFFSITE POWER - POS8-1
			ACWOO02SC	2.2E-02	(HE) FAIL TO ESTABLISH THE ALTERNATE CCWS BY FIRE PROTECTION WATER SUPPLY SYSTEM
			GI	1.0E+00	GUARANTEED FAILURE OF GRAVITY INJECTION
			SWSCF3MVOD503ABC-ALL	0.0E+00	EWS-MOV-503A,B,C FAIL TO OPEN (CCF)
4	1.1E-10	2.5	!LOOP8-1	6.7E-04	LOSS OF OFFSITE POWER - POS8-1
			EPSCF4CBSO52STH-ALL	1.6E-07	EPS 52/STHA,B,C,D (BREAKER) SPURIOUS OPEN (CCF)
			GI	1.0E+00	GUARANTEED FAILURE OF GRAVITY INJECTION
5	1.1E-10	2.5	!LOOP8-1	6.7E-04	LOSS OF OFFSITE POWER - POS8-1
			EPSCF4CBSO52STL-ALL	1.6E-07	EPS 52/STLA,B,C,D (BREAKER) SPURIOUS OPEN (CCF)
			GI	1.0E+00	GUARANTEED FAILURE OF GRAVITY INJECTION

Table 19.1-160 LOOP Resulting Loss of CCW Sequence Dominant Cutsets of POS 8-1 for LPSD PRA (Sheet 2 of 2)

No	Cutsets freq.(/ry)	Percent	Cutsets	Frequency/ probability	Basic Event Description
6	1.1E-10	2.5	!LOOP8-1	6.7E-04	LOSS OF OFFSITE POWER - POS8-1
			EPSCF4CBSO52LC-ALL	1.6E-07	EPS 52/LCA,B,C,D (BREAKER) SPURIOUS OPEN (CCF)
			GI	1.0E+00	GUARANTEED FAILURE OF GRAVITY INJECTION
7	6.0E-11	1.4	!LOOP8-1	6.7E-04	LOSS OF OFFSITE POWER - POS8-1
			CHIPMAD001A	1.5E-03	CVS-MPP-001A (A-CHI PUMP) FAIL TO START
			GI	1.0E+00	GUARANTEED FAILURE OF GRAVITY INJECTION
			SWSCF3PMBD001ABC-ALL	6.0E-05	EWS-MPP-001A,B,C (ESW PUMP) FAIL TO RE-START (CCF)
8	4.0E-11	0.96	!LOOP8-1	6.7E-04	LOSS OF OFFSITE POWER - POS8-1
			ACWMVOD322A	1.0E-03	NCS-MOV-322A FAIL TO OPEN
			GI	1.0E+00	GUARANTEED FAILURE OF GRAVITY INJECTION
			SWSCF3PMBD001ABC-ALL	6.0E-05	EWS-MPP-001A,B,C (ESW PUMP) FAIL TO RE-START (CCF)
9	4.0E-11	0.96	!LOOP8-1	6.7E-04	LOSS OF OFFSITE POWER - POS8-1
			ACWMVOD325A	1.0E-03	NCS-MOV-325A FAIL TO OPEN
			GI	1.0E+00	GUARANTEED FAILURE OF GRAVITY INJECTION
			SWSCF3PMBD001ABC-ALL	6.0E-05	EWS-MPP-001A,B,C (ESW PUMP) FAIL TO RE-START (CCF)
10	4.0E-11	0.96	!LOOP8-1	6.7E-04	LOSS OF OFFSITE POWER - POS8-1
			ACWMVOD324A	1.0E-03	NCS-MOV-324A FAIL TO OPEN
			GI	1.0E+00	GUARANTEED FAILURE OF GRAVITY INJECTION
			SWSCF3PMBD001ABC-ALL	6.0E-05	EWS-MPP-001A,B,C (ESW PUMP) FAIL TO RE-START (CCF)

Table 19.1-161 LOCA Resulting Isolation Failure Sequence Dominant Cutsets of POS 8-1 for LPSD PRA (Sheet 1 of 3)

No	Cutsets freq.(/ry)	Percent	Cutsets	Frequency/ probability	Basic Event Description
1	3.6E-09	93.6	!LOCA8-1	1.6E-04	LOSS OF COOLANT ACCIDENT - POS8-1
			CHIOO02P+RWS-DP3	1.6E-01	(HE) FAIL TO START STANDBY CHARGING PUMP AND REFILL RWSAT WATER FROM RWSP
			GI	1.0E+00	GUARANTEED FAILURE OF GRAVITY INJECTION
			HPIOO02S-DP2	5.5E-02	(HE) FAIL TO START STANDBY SAFETY INJECTION PUMP
			LOAOO02LC	2.6E-03	(HE) FAIL TO ISOLATE THE LEAKAGE TRAIN OF RHR SYSTEM
2	9.4E-11	2.5	!LOCA8-1	1.6E-04	LOSS OF COOLANT ACCIDENT - POS8-1
			CHIOO01RECOV	5.8E-02	(HE) FAIL TO START CHARGING PUMP AND SAFETY INJECTION PUMP - LOCAL ACTION
			GI	1.0E+00	GUARANTEED FAILURE OF GRAVITY INJECTION
			SGNBTSWCCF3	1.0E-05	NON-SAFETY (PSMS) APPLICATION SOFTWARE CCF
3	4.5E-11	1.2	!LOCA8-1	1.6E-04	LOSS OF COOLANT ACCIDENT - POS8-1
			CHIPMBD001A	2.0E-03	CVS-MPP-001A (A-CHI PUMP) FAIL TO START
			GI	1.0E+00	GUARANTEED FAILURE OF GRAVITY INJECTION
			HPIOO02S-DP2	5.5E-02	(HE) FAIL TO START STANDBY SAFETY INJECTION PUMP
			LOAOO02LC	2.6E-03	(HE) FAIL TO ISOLATE THE LEAKAGE TRAIN OF RHR SYSTEM
4	1.8E-11	0.47	!LOCA8-1	1.6E-04	LOSS OF COOLANT ACCIDENT - POS8-1
			GI	1.0E+00	GUARANTEED FAILURE OF GRAVITY INJECTION
			HPIOO02S-DP2	5.5E-02	(HE) FAIL TO START STANDBY SAFETY INJECTION PUMP
			LOAOO02LC	2.6E-03	(HE) FAIL TO ISOLATE THE LEAKAGE TRAIN OF RHR SYSTEM
			RWSOO04XV051	8.0E-04	(HE) MISALIGNMENT OF RWS-VLV-051 AFTER TEST OR MAINTENANCE

Table 19.1-161 LOCA Resulting Isolation Failure Sequence Dominant Cutsets of POS 8-1 for LPSD PRA (Sheet 2 of 3)

No	Cutsets freq.(/ry)	Percent	Cutsets	Frequency/ probability	Basic Event Description
5	1.6E-11	0.42	!LOCA8-1	1.6E-04	LOSS OF COOLANT ACCIDENT - POS8-1
			GI	1.0E+00	GUARANTEED FAILURE OF GRAVITY INJECTION
			RTPBTSWCCF	1.0E-07	BASIC SOFTWARE CCF
6	1.6E-11	0.41	!LOCA8-1	1.6E-04	LOSS OF COOLANT ACCIDENT - POS8-1
			GI	1.0E+00	GUARANTEED FAILURE OF GRAVITY INJECTION
			HPIOO02S-DP2	5.5E-02	(HE) FAIL TO START STANDBY SAFETY INJECTION PUMP
			LOAOO02LC	2.6E-03	(HE) FAIL TO ISOLATE THE LEAKAGE TRAIN OF RHR SYSTEM
			RWSXVOD052	7.0E-04	RWS-VLV-052 FAIL TO OPEN
7	1.6E-11	0.41	!LOCA8-1	1.6E-04	LOSS OF COOLANT ACCIDENT - POS8-1
			GI	1.0E+00	GUARANTEED FAILURE OF GRAVITY INJECTION
			HPIOO02S-DP2	5.5E-02	(HE) FAIL TO START STANDBY SAFETY INJECTION PUMP
			LOAOO02LC	2.6E-03	(HE) FAIL TO ISOLATE THE LEAKAGE TRAIN OF RHR SYSTEM
			RWSXVOD021	7.0E-04	RWS-VLV-021 FAIL TO OPEN
8	7.9E-12	0.21	!LOCA8-1	1.6E-04	LOSS OF COOLANT ACCIDENT - POS8-1
			GI	1.0E+00	GUARANTEED FAILURE OF GRAVITY INJECTION
			HPIOO02S	4.9E-03	(HE) FAIL TO START STANDBY SAFETY INJECTION PUMP
			SGNBTSWCCF3	1.0E-05	NON-SAFETY (PSMS) APPLICATION SOFTWARE CCF
9	4.3E-12	0.11	!LOCA8-1	1.6E-04	LOSS OF COOLANT ACCIDENT - POS8-1
			CHIOO02P+RWS-DP2	6.8E-02	(HE) FAIL TO START STANDBY CHARGING PUMP AND REFILL RWSAT WATER FROM RWSP
			GI	1.0E+00	GUARANTEED FAILURE OF GRAVITY INJECTION
			HPICF2PMAD001AC-ALL	1.5E-04	SIS-MPP-001A,C (SI PUMP) FAIL TO START (CCF)
			LOAOO02LC	2.6E-03	(HE) FAIL TO ISOLATE THE LEAKAGE TRAIN OF RHR SYSTEM

Table 19.1-161 LOCA Resulting Isolation Failure Sequence Dominant Cutsets of POS 8-1 for LPSD PRA (Sheet 3 of 3)

No	Cutsets freq.(/ry)	Percent	Cutsets	Frequency/ probability	Basic Event Description
10	3.1E-12	0.08	!LOCA8-1	1.6E-04	LOSS OF COOLANT ACCIDENT - POS8-1
			CHICF2MVCD031BC-ALL	1.4E-04	CVS-LCV-031B,C FAIL TO CLOSE (CCF)
			GI	1.0E+00	GUARANTEED FAILURE OF GRAVITY INJECTION
			HPIOO02S-DP2	5.5E-02	(HE) FAIL TO START STANDBY SAFETY INJECTION PUMP
			LOAOO02LC	2.6E-03	(HE) FAIL TO ISOLATE THE LEAKAGE TRAIN OF RHR SYSTEM

Table 19.1-162 LORH with No Mitigation System Sequence Dominant Cutsets of POS 8-1 for LPSD PRA (Sheet 1 of 3)

No	Cutsets freq.(/ry)	Percent	Cutsets	Frequency/ probability	Basic Event Description
1	3.4E-09	90.9	!LORH8-1	1.0E-05	LOSS OF RHR CAUSED BY OTHER FAILURES - POS8-1
			CHIOO02P+RWS-DP2	6.8E-02	(HE) FAIL TO START STANDBY CHARGING PUMP AND REFILL RWSAT WATER FROM RWSP
			GI	1.0E+00	GUARANTEED FAILURE OF GRAVITY INJECTION
			HPIOO02S	4.9E-03	(HE) FAIL TO START STANDBY SAFETY INJECTION PUMP
			SG	1.0E+00	GUARANTEED FAILURE OF DECAY HEAT REMOVAL BY SG
2	1.0E-10	2.7	!LORH8-1	1.0E-05	LOSS OF RHR CAUSED BY OTHER FAILURES - POS8-1
			CHIPMBD001A	2.0E-03	CVS-MPP-001A (A-CHI PUMP) FAIL TO START
			GI	1.0E+00	GUARANTEED FAILURE OF GRAVITY INJECTION
			HPIOO02S	4.9E-03	(HE) FAIL TO START STANDBY SAFETY INJECTION PUMP
			SG	1.0E+00	GUARANTEED FAILURE OF DECAY HEAT REMOVAL BY SG
3	4.0E-11	1.1	!LORH8-1	1.0E-05	LOSS OF RHR CAUSED BY OTHER FAILURES - POS8-1
			GI	1.0E+00	GUARANTEED FAILURE OF GRAVITY INJECTION
			HPIOO02S	4.9E-03	(HE) FAIL TO START STANDBY SAFETY INJECTION PUMP
			RWSOO04XV051	8.0E-04	(HE) MISALIGNMENT OF RWS-VLV-051 AFTER TEST OR MAINTENANCE
			SG	1.0E+00	GUARANTEED FAILURE OF DECAY HEAT REMOVAL BY SG
4	3.5E-11	0.93	!LORH8-1	1.0E-05	LOSS OF RHR CAUSED BY OTHER FAILURES - POS8-1
			GI	1.0E+00	GUARANTEED FAILURE OF GRAVITY INJECTION
			HPIOO02S	4.9E-03	(HE) FAIL TO START STANDBY SAFETY INJECTION PUMP
			RWSXVOD052	7.0E-04	RWS-VLV-052 FAIL TO OPEN
			SG	1.0E+00	GUARANTEED FAILURE OF DECAY HEAT REMOVAL BY SG

Table 19.1-162 LORH with No Mitigation System Sequence Dominant Cutsets of POS 8-1 for LPSD PRA (Sheet 2 of 3)

No	Cutsets freq.(/ry)	Percent	Cutsets	Frequency/ probability	Basic Event Description
5	3.5E-11	0.93	!LORH8-1	1.0E-05	LOSS OF RHR CAUSED BY OTHER FAILURES - POS8-1
			GI	1.0E+00	GUARANTEED FAILURE OF GRAVITY INJECTION
			HPIOO02S	4.9E-03	(HE) FAIL TO START STANDBY SAFETY INJECTION PUMP
			RWSXVOD021	7.0E-04	RWS-VLV-021 FAIL TO OPEN
			SG	1.0E+00	GUARANTEED FAILURE OF DECAY HEAT REMOVAL BY SG
6	3.0E-11	0.80	!LORH8-1	1.0E-05	LOSS OF RHR CAUSED BY OTHER FAILURES - POS8-1
			CHIOO02P+RWS	1.9E-02	(HE) FAIL TO START STANDBY CHARGING PUMP AND REFILL RWSAT WATER FROM RWSP
			GI	1.0E+00	GUARANTEED FAILURE OF GRAVITY INJECTION
			HPICF2PMAD001AC-ALL	1.5E-04	SIS-MPP-001A,C (SI PUMP) FAIL TO START (CCF)
			SG	1.0E+00	GUARANTEED FAILURE OF DECAY HEAT REMOVAL BY SG
7	6.8E-12	0.18	!LORH8-1	1.0E-05	LOSS OF RHR CAUSED BY OTHER FAILURES - POS8-1
			CHICF2MVCD031BC-ALL	1.4E-04	CVS-LCV-031B,C FAIL TO CLOSE (CCF)
			GI	1.0E+00	GUARANTEED FAILURE OF GRAVITY INJECTION
			HPIOO02S	4.9E-03	(HE) FAIL TO START STANDBY SAFETY INJECTION PUMP
			SG	1.0E+00	GUARANTEED FAILURE OF DECAY HEAT REMOVAL BY SG
8	6.0E-12	0.16	!LORH8-1	1.0E-05	LOSS OF RHR CAUSED BY OTHER FAILURES - POS8-1
			CHIPMYR001A	1.2E-04	CVS-MPP-001A (A-CHI PUMP) FAIL TO RUN
			GI	1.0E+00	GUARANTEED FAILURE OF GRAVITY INJECTION
			HPIOO02S	4.9E-03	(HE) FAIL TO START STANDBY SAFETY INJECTION PUMP
			SG	1.0E+00	GUARANTEED FAILURE OF DECAY HEAT REMOVAL BY SG

Table 19.1-162 LORH with No Mitigation System Sequence Dominant Cutsets of POS 8-1 for LPSD PRA (Sheet 3 of 3)

No	Cutsets freq.(/ry)	Percent	Cutsets	Frequency/ probability	Basic Event Description
9	6.0E-12	0.16	!LORH8-1	1.0E-05	LOSS OF RHR CAUSED BY OTHER FAILURES - POS8-1
			CHIOO01RECOV	5.8E-02	(HE) FAIL TO START CHARGING PUMP AND SAFETY INJECTION PUMP - LOCAL ACTION
			GI	1.0E+00	GUARANTEED FAILURE OF GRAVITY INJECTION
			SG	1.0E+00	GUARANTEED FAILURE OF DECAY HEAT REMOVAL BY SG
			SGNBTSWCCF3	1.0E-05	NON-SAFETY (PSMS) APPLICATION SOFTWARE CCF
10	5.7E-12	0.15	!LORH8-1	1.0E-05	LOSS OF RHR CAUSED BY OTHER FAILURES - POS8-1
			CHICF4MVOD031-ALL	1.1E-04	CVS-LCV-031D,E,F,G FAIL TO OPEN (CCF)
			GI	1.0E+00	GUARANTEED FAILURE OF GRAVITY INJECTION
			HPIOO02S	4.9E-03	(HE) FAIL TO START STANDBY SAFETY INJECTION PUMP
			SG	1.0E+00	GUARANTEED FAILURE OF DECAY HEAT REMOVAL BY SG

Table 19.1-163 OVDR Resulting Failure of RCS Makeup Sequence Dominant Cutsets of POS 8-1 for LPSD PRA (Sheet 1 of 3)

No	Cutsets freq.(/ry)	Percent	Cutsets	Frequency/ probability	Basic Event Description
1	7.2E-10	54.5	!OVDR8-1	1.5E-03	LOSS OF RHR DUE TO OVERDRAIN - POS8-1
			GI	1.0E+00	GUARANTEED FAILURE OF GRAVITY INJECTION
			HPIOO02S	4.9E-03	(HE) FAIL TO START STANDBY SAFETY INJECTION PUMP
			SG	1.0E+00	GUARANTEED FAILURE OF DECAY HEAT REMOVAL BY SG
			SGNBTSWCCF1	1.0E-04	GROUP-1 APPLICATION SOFTWARE CCF
2	2.5E-10	18.7	!OVDR8-1	1.5E-03	LOSS OF RHR DUE TO OVERDRAIN - POS8-1
			CHIOO02P	2.6E-03	(HE) FAIL TO START STANDBY CHARGING PUMP
			CVCAVCD024B	1.2E-03	RHS-AOV-024B FAIL TO CLOSE
			GI	1.0E+00	GUARANTEED FAILURE OF GRAVITY INJECTION
			HPIOO02S-DP2	5.5E-02	(HE) FAIL TO START STANDBY SAFETY INJECTION PUMP
			SG	1.0E+00	GUARANTEED FAILURE OF DECAY HEAT REMOVAL BY SG
3	2.5E-10	18.7	!OVDR8-1	1.5E-03	LOSS OF RHR DUE TO OVERDRAIN - POS8-1
			CHIOO02P	2.6E-03	(HE) FAIL TO START STANDBY CHARGING PUMP
			CVCAVCD024C	1.2E-03	RHS-AOV-024C FAIL TO CLOSE
			GI	1.0E+00	GUARANTEED FAILURE OF GRAVITY INJECTION
			HPIOO02S-DP2	5.5E-02	(HE) FAIL TO START STANDBY SAFETY INJECTION PUMP
			SG	1.0E+00	GUARANTEED FAILURE OF DECAY HEAT REMOVAL BY SG
4	2.3E-11	1.7	!OVDR8-1	1.5E-03	LOSS OF RHR DUE TO OVERDRAIN - POS8-1
			GI	1.0E+00	GUARANTEED FAILURE OF GRAVITY INJECTION
			HPICF2PMAD001AC-ALL	1.5E-04	SIS-MPP-001A,C (SI PUMP) FAIL TO START (CCF)
			SG	1.0E+00	GUARANTEED FAILURE OF DECAY HEAT REMOVAL BY SG
			SGNBTSWCCF1	1.0E-04	GROUP-1 APPLICATION SOFTWARE CCF

Table 19.1-163 OVDR Resulting Failure of RCS Makeup Sequence Dominant Cutsets of POS 8-1 for LPSD PRA (Sheet 2 of 3)

No	Cutsets freq.(/ry)	Percent	Cutsets	Frequency/ probability	Basic Event Description
5	2.1E-11	1.6	!OVDR8-1	1.5E-03	LOSS OF RHR DUE TO OVERDRAIN - POS8-1
			CHIOO02P	2.6E-03	(HE) FAIL TO START STANDBY CHARGING PUMP
			GI	1.0E+00	GUARANTEED FAILURE OF GRAVITY INJECTION
			HPIOO02S-DP2	5.5E-02	(HE) FAIL TO START STANDBY SAFETY INJECTION PUMP
			SG	1.0E+00	GUARANTEED FAILURE OF DECAY HEAT REMOVAL BY SG
			SGNBTSWCCF1	1.0E-04	GROUP-1 APPLICATION SOFTWARE CCF
6	1.7E-11	1.3	!OVDR8-1	1.5E-03	LOSS OF RHR DUE TO OVERDRAIN - POS8-1
			CHIPMBD001A	2.0E-03	CVS-MPP-001A (A-CHI PUMP) FAIL TO START
			CVCAVCD024B	1.2E-03	RHS-AOV-024B FAIL TO CLOSE
			GI	1.0E+00	GUARANTEED FAILURE OF GRAVITY INJECTION
			HPIOO02S	4.9E-03	(HE) FAIL TO START STANDBY SAFETY INJECTION PUMP
			SG	1.0E+00	GUARANTEED FAILURE OF DECAY HEAT REMOVAL BY SG
7	1.7E-11	1.3	!OVDR8-1	1.5E-03	LOSS OF RHR DUE TO OVERDRAIN - POS8-1
			CHIPMBD001A	2.0E-03	CVS-MPP-001A (A-CHI PUMP) FAIL TO START
			CVCAVCD024C	1.2E-03	RHS-AOV-024C FAIL TO CLOSE
			GI	1.0E+00	GUARANTEED FAILURE OF GRAVITY INJECTION
			HPIOO02S	4.9E-03	(HE) FAIL TO START STANDBY SAFETY INJECTION PUMP
			SG	1.0E+00	GUARANTEED FAILURE OF DECAY HEAT REMOVAL BY SG
8	2.4E-12	0.18	!OVDR8-1	1.5E-03	LOSS OF RHR DUE TO OVERDRAIN - POS8-1
			GI	1.0E+00	GUARANTEED FAILURE OF GRAVITY INJECTION
			HPICF2PMSR001AC-ALL	1.7E-05	SIS-MPP-001A,C (SI PUMP) FAIL TO RUN DURING FIRST HOUR OF OPERATION (CCF)
			SG	1.0E+00	GUARANTEED FAILURE OF DECAY HEAT REMOVAL BY SG
			SGNBTSWCCF1	1.0E-04	GROUP-1 APPLICATION SOFTWARE CCF

Table 19.1-163 OVDR Resulting Failure of RCS Makeup Sequence Dominant Cutsets of POS 8-1 for LPSD PRA (Sheet 3 of 3)

No	Cutsets freq.(/ry)	Percent	Cutsets	Frequency/ probability	Basic Event Description
9	1.4E-12	0.11	!OVDR8-1	1.5E-03	LOSS OF RHR DUE TO OVERDRAIN - POS8-1
			GI	1.0E+00	GUARANTEED FAILURE OF GRAVITY INJECTION
			RWSCF4SUPR001-ALL	9.7E-06	SIS-SST-001A,B,C,D (ESS/CS STRAINER) PLUG DURING OPERATION (CCF)
			SG	1.0E+00	GUARANTEED FAILURE OF DECAY HEAT REMOVAL BY SG
			SGNBTSWCCF1	1.0E-04	GROUP-1 APPLICATION SOFTWARE CCF
10	1.2E-12	0.09	!OVDR8-1	1.5E-03	LOSS OF RHR DUE TO OVERDRAIN - POS8-1
			CHICF2MVCD031BC-ALL	1.4E-04	CVS-LCV-031B,C FAIL TO CLOSE (CCF)
			CVCAVCD024C	1.2E-03	RHS-AOV-024C FAIL TO CLOSE
			GI	1.0E+00	GUARANTEED FAILURE OF GRAVITY INJECTION
			HPIOO02S	4.9E-03	(HE) FAIL TO START STANDBY SAFETY INJECTION PUMP
			SG	1.0E+00	GUARANTEED FAILURE OF DECAY HEAT REMOVAL BY SG

Table 19.1-164 Basic Events (Hardware Failure, Human Error) FV Importance of POS 4-3 for LPSD PRA (Sheet 1 of 2)

Rank	Basic Event ID	Basic Event Description	Basic Event Probability	FV Importance	RAW
1	HPIOO02S-DP2	(HE) FAIL TO START STANDBY SAFETY INJECTION PUMP	5.5E-02	5.0E-01	9.6E+00
2	RSSOO02P	(HE) FAIL TO RE-START THE RHR PUMPS WHEN THE LOOP EVENT OCCURS	2.6E-03	3.3E-01	1.3E+02
3	CHIOO02P+RWS-DP3	(HE) FAIL TO START STANDBY CHARGING PUMP AND REFILL RWSAT WATER FROM RWSP	1.6E-01	3.0E-01	2.6E+00
4	ACRPOS4-3-F	FAILURE OF OFFSITE POWER RECOVERY (POS4-3)	3.1E-01	2.0E-01	1.5E+00
5	CHIOO02RWS-DP3	(HE) FAIL TO REFILL RWSAT WATER FROM RWSP	1.6E-01	1.8E-01	2.0E+00
6	HPIOO02S	(HE) FAIL TO START STANDBY SAFETY INJECTION PUMP	4.9E-03	1.6E-01	3.4E+01
7	EPSOO02RDG	(HE) FAIL TO CONNECT THE ALTERNATE AC POWER SOURCE TO CLASS 1E BUS	2.1E-02	1.4E-01	7.6E+00
8	RSSOO02LINE+P	(HE) FAIL TO ESTABLISH RHR INJECTION LINE AND START STANBY PUMP	3.8E-03	1.1E-01	3.0E+01
9	EPSCF4DLLRGTG-ALL	CLASS-1E GTG A,B,C, D FAIL TO LOAD AND RUN AFTER FIRST HOUR OF OPERATION (CCF)	9.9E-04	1.0E-01	1.1E+02
10	LOAOO02LC	(HE) FAIL TO ISOLATE THE LEAKAGE TRAIN OF RHR SYSTEM	2.6E-03	7.4E-02	3.0E+01
11	SGNBTSWCCF3	NON-SAFETY (PSMS) APPLICATION SOFTWARE CCF	1.0E-05	5.3E-02	5.3E+03
12	CHIOO02RWS-DP2	(HE) FAIL TO REFILL RWSAT WATER FROM RWSP	6.7E-02	5.3E-02	1.7E+00
13	CVCAVCD024C	RHS-AOV-024C FAIL TO CLOSE	1.2E-03	4.9E-02	4.2E+01
14	CVCAVCD024B	RHS-AOV-024B FAIL TO CLOSE	1.2E-03	4.9E-02	4.2E+01
15	ACWOO02SC	(HE) FAIL TO ESTABLISH THE ALTERNATE CCWS BY FIRE PROTECTION WATER SUPPLY SYSTEM	2.2E-02	4.8E-02	3.1E+00
16	EPSCF4DLADGTG-ALL	CLASS-1E GTG A,B,C,D FAIL TO START (CCF)	2.1E-04	2.2E-02	1.1E+02
17	SWSCF4PMBD001-ALL	EWS-MPP-001A,B,C,D (EWS PUMP) FAIL TO RE-START (CCF)	4.8E-05	2.1E-02	4.3E+02

Table 19.1-164 Basic Events (Hardware Failure, Human Error) FV Importance of POS 4-3 for LPSD PRA (Sheet 2 of 2)

Rank	Basic Event ID	Basic Event Description	Basic Event Probability	FV Importance	RAW
18	EPSCF4DLSRGTG-ALL	CLASS-1E GTG A,B FAIL TO LOAD AND RUN DURING FIRST HOUR OF OPERATION (CCF)	1.6E-04	1.7E-02	1.1E+02
19	CWSCF4PCBD001-ALL	NCS-MPP-001A,B,C,D (CCW PUMP) FAIL TO RE-START (CCF)	2.6E-05	1.1E-02	4.3E+02
20	ACRPOS4-3-S	SUCCESS OF OFFSITE POWER RECOVERY (POS4-3)	6.9E-01	1.0E-02	1.0E+00
21	EPSDLLRAACB	B-AAC FAIL TO LOAD AND RUN AFTER FIRST HOUR OF OPERATION	1.8E-02	9.9E-03	1.5E+00
22	EPSCF2DLLRAAC-ALL	AAC A,B FAIL TO RUN AFTER FIRST HOUR OF OPERATION (CCF)	1.5E-03	9.8E-03	7.7E+00
23	CHIOO02P+RWS-DP2	(HE) FAIL TO START STANDBY CHARGING PUMP AND REFILL RWSAT WATER FROM RWSP	6.8E-02	8.1E-03	1.1E+00
24	CHIOO01RECOV	(HE) FAIL TO START CHARGING PUMP AND SAFETY INJECTION PUMP - LOCAL ACTION	5.8E-02	7.5E-03	1.1E+00
25	SGNBTSWCCF1	GROUP-1 APPLICATION SOFTWARE CCF	1.0E-04	6.4E-03	6.5E+01
26	EPSDLLREGTGD-ABCD	D-CLASS 1E GTG FAIL TO LOAD AND RUN AFTER FIRST HOUR OF OPERATION	1.7E-02	6.0E-03	1.4E+00
27	EPSDLLREGTGB-ABCD	B-CLASS 1E GTG FAIL TO LOAD AND RUN AFTER FIRST HOUR OF OPERATION	1.7E-02	5.8E-03	1.3E+00
28	SWSCF4MVOD503-ALL	EWS-MOV-503A,B,C,D FAIL TO OPEN (CCF)	1.3E-05	5.4E-03	4.3E+02

Table 19.1-165 Basic Events (Hardware Failure, Human Error) RAW of POS 4-3 for LPSD PRA (Sheet 1 of 62)

Rank	Basic Event ID	Basic Event Description	Basic Event Probability	RAW	FV Importance
1	RTPBTSWCCF	BASIC SOFTWARE CCF	1.0E-07	2.5E+04	2.5E-03
2	EPSCF4CBSO52STH-ALL	EPS 52/STHA,B,C,D (BREAKER) SPURIOUS OPEN (CCF)	1.6E-07	1.4E+04	2.1E-03
3	EPSCF4CBSO52STL-ALL	EPS 52/STLA,B,C,D (BREAKER) SPURIOUS OPEN (CCF)	1.6E-07	1.4E+04	2.1E-03
4	EPSCF4CBSO52LC-ALL	EPS 52/LCA,B,C,D (BREAKER) SPURIOUS OPEN (CCF)	1.6E-07	1.4E+04	2.1E-03
5	SWSCF4PMYR001-ALL	EWS-MPP-001A,B,C,D (EWS PUMP) FAIL TO RUN (CCF)	1.2E-07	1.4E+04	1.6E-03
6	CWSCF4PCYR001-ALL	NCS-MPP-001A,B,C,D (CCW PUMP) FAIL TO RUN (CCF)	6.7E-08	1.4E+04	9.1E-04
7	CWSCF4RHPF001-ALL	NCS-MHX-001A,B,C.D (CCW HX) PLUG / FOUL(CCF)	1.8E-08	1.4E+04	2.4E-04
8	SGNBTSWCCF3	NON-SAFETY (PSMS) APPLICATION SOFTWARE CCF	1.0E-05	5.3E+03	5.3E-02
9	EPSCF4CBSC52RAT-ALL	EPS 52/RATA,B,C,D (BREAKER) SPURIOUS CLOSE (CCF)	1.6E-07	4.2E+03	6.6E-04
10	EPSCF4CBSC52UAT-ALL	EPS 52/UATA,B,C,D (BREAKER) SPURIOUS CLOSE (CCF)	1.6E-07	4.2E+03	6.6E-04
11	CWSCF4RHPF-FF	NCS-MHX-001A,B,C,D (A,B,C,D-CCW HX) PLUG / FOUL (CCF)	3.6E-08	3.5E+03	1.2E-04
12	SWSCF4PMYR-FF	EWS-MPP-001A,B,C,D (A,B,C,D-EWS PUMP) FAIL TO RUN (CCF)	1.2E-08	3.5E+03	4.2E-05
13	CWSCF4PCYR-FF	NCS-MPP-001A,B,C,D (A,B,C,D-CCW PUMP) FAIL TO RUN (CCF)	6.7E-09	3.5E+03	2.3E-05

Table 19.1-165 Basic Events (Hardware Failure, Human Error) RAW of POS 4-3 for LPSD PRA (Sheet 2 of 62)

Rank	Basic Event ID	Basic Event Description	Basic Event Probability	RAW	FV Importance
14	EPSCF4CBSO52STL-234	EPS 52/STLA,C,D (BREAKER) SPURIOUS OPEN (CCF)	2.9E-08	6.5E+02	1.9E-05
15	EPSCF4CBSO52STH-134	EPS 52/STHA,C,D (BREAKER) SPURIOUS OPEN (CCF)	2.9E-08	6.5E+02	1.9E-05
16	EPSCF4CBSO52LC-134	EPS 52/LCA,C,D (BREAKER) SPURIOUS OPEN (CCF)	2.9E-08	6.2E+02	1.8E-05
17	CWSCF4RHPF001-134	NCS-MHX-001A,C.D (CCW HX) PLUG / FOUL(CCF)	6.0E-09	5.7E+02	3.4E-06
18	EPSCF4CBSO52STH-124	EPS 52/STHA,B,D (BREAKER) SPURIOUS OPEN (CCF)	2.9E-08	5.0E+02	1.5E-05
19	EPSCF4CBSO52STL-134	EPS 52/STLA,B,D (BREAKER) SPURIOUS OPEN (CCF)	2.9E-08	5.0E+02	1.5E-05
20	EPSCF4CBSO52LC-124	EPS 52/LCA,B,D (BREAKER) SPURIOUS OPEN (CCF)	2.9E-08	4.8E+02	1.4E-05
21	CWSCF4RHPF001-124	NCS-MHX-001A,B,D (CCW HX) PLUG / FOUL(CCF)	6.0E-09	4.3E+02	2.6E-06
22	SWSCF4PMBD001-ALL	EWS-MPP-001A,B,C,D (EWS PUMP) FAIL TO RE-START (CCF)	4.8E-05	4.3E+02	2.1E-02
23	CWSCF4PCBD001-ALL	NCS-MPP-001A,B,C,D (CCW PUMP) FAIL TO RE-START (CCF)	2.6E-05	4.3E+02	1.1E-02
24	SWSCF4MVOD503-ALL	EWS-MOV-503A,B,C,D FAIL TO OPEN (CCF)	1.3E-05	4.3E+02	5.4E-03
25	CWSCF4CVOD016-ALL	NCS-VLV-016A,B,C,D FAIL TO RE-OPEN (CCF)	1.5E-07	4.3E+02	6.4E-05
26	SWSCF4CVOD502-ALL	EWS-VLV-502A,B,C,D FAIL TO RE-OPEN (CCF)	1.5E-07	4.3E+02	6.4E-05
27	SWSCF4CVOD602-ALL	EWS-VLV-602A,B,C,D FAIL TO RE-OPEN (CCF)	1.5E-07	4.3E+02	6.4E-05

Table 19.1-165 Basic Events (Hardware Failure, Human Error) RAW of POS 4-3 for LPSD PRA (Sheet 3 of 62)

Rank	Basic Event ID	Basic Event Description	Basic Event Probability	RAW	FV Importance
28	EPSCBFO52UAT-ACD	EPS 52/UATA,C,D (BREAKER) FAIL TO OPEN (CCF)	5.2E-06	3.5E+02	1.8E-03
29	EPSCBFO52RAT-ACD	EPS 52/RATA,C,D (BREAKER) FAIL TO OPEN (CCF)	5.2E-06	3.5E+02	1.8E-03
30	EPSCF4CBSC52UAT-134	EPS 52/UATA,C,D (BREAKER) SPURIOUS CLOSE (CCF)	2.9E-08	3.5E+02	1.0E-05
31	EPSCF4CBSC52RAT-234	EPS 52/RATA,C,D (BREAKER) SPURIOUS CLOSE (CCF)	2.9E-08	3.5E+02	1.0E-05
32	EPSCBFO52RAT-ABD	EPS 52/RATA,B,D (BREAKER) FAIL TO OPEN (CCF)	5.2E-06	2.7E+02	1.4E-03
33	EPSCBFO52UAT-ABD	EPS 52/UATA,B,D (BREAKER) FAIL TO OPEN (CCF)	5.2E-06	2.7E+02	1.4E-03
34	EPSCF4CBSC52UAT-124	EPS 52/UATA,B,D (BREAKER) SPURIOUS CLOSE (CCF)	2.9E-08	2.7E+02	7.8E-06
35	EPSCF4CBSC52RAT-134	EPS 52/RATA,B,D (BREAKER) SPURIOUS CLOSE (CCF)	2.9E-08	2.7E+02	7.8E-06
36	RWSXVEL024	RWS-VLV-024 EXTERNAL LEAK LARGE	7.2E-08	2.4E+02	1.7E-05
37	RWSTNEL001	RWS-MCP-001 (RWSP) EXTERNAL LEAK LARGE	4.8E-08	2.4E+02	1.1E-05
38	RWSCVEL023	RWS-VLV-023 EXTERNAL LEAK LARGE	4.8E-08	2.4E+02	1.1E-05
39	RWSPNELPIPE1	RWS PIPING BETWEEN RWSP AND RWS-VLV-023 EXTERNAL LEAK LARGE	6.0E-10	2.4E+02	1.4E-07
40	RWSXVEL001	RWS-VLV-001 EXTERNAL LEAK LARGE	7.2E-08	2.4E+02	1.7E-05
41	RSSPNEL01B	CSS PIPING BETWEEN RWSP AND CSS-MOV-001B EXTERNAL LEAK LARGE	2.9E-08	2.3E+02	6.6E-06

Table 19.1-165 Basic Events (Hardware Failure, Human Error) RAW of POS 4-3 for LPSD PRA (Sheet 4 of 62)

Rank	Basic Event ID	Basic Event Description	Basic Event Probability	RAW	FV Importance
42	RSSPNEL01D	CSS PIPING BETWEEN RWSP AND CSS-MOV-001D EXTERNAL LEAK LARGE	2.9E-08	2.3E+02	6.6E-06
43	RSSPNEL01C	CSS PIPING BETWEEN RWSP AND CSS-MOV-001C EXTERNAL LEAK LARGE	2.8E-08	2.3E+02	6.6E-06
44	RSSPNEL01A	CSS PIPING BETWEEN RWSP AND CSS-MOV-001A EXTERNAL LEAK LARGE	2.8E-08	2.3E+02	6.6E-06
45	HPIPNELSUCTSB	SIS B-SI PUMP SUCTION LINE (INSIDE C/V) PIPING EXTERNAL LEAK LARGE	2.8E-08	2.3E+02	6.5E-06
46	HPIPNELSUCTSD	SIS D-SI PUMP SUCTION LINE (INSIDE C/V) PIPING EXTERNAL LEAK LARGE	2.8E-08	2.3E+02	6.5E-06
47	HPIPNELSUCTSC	SIS C-SI PUMP SUCTION LINE (INSIDE C/V) PIPING EXTERNAL LEAK LARGE	2.8E-08	2.3E+02	6.5E-06
48	HPIPNELSUCTSA	SIS A-SI PUMP SUCTION LINE (INSIDE C/V) PIPING EXTERNAL LEAK LARGE	2.8E-08	2.3E+02	6.5E-06
49	RWSMVEL002	RWS-MOV-002 EXTERNAL LEAK LARGE	2.4E-08	2.3E+02	5.6E-06
50	HPIMVEL001D	SIS-MOV-001D EXTERNAL LEAK LARGE	2.4E-08	2.3E+02	5.6E-06
51	HPIMVEL001B	SIS-MOV-001B EXTERNAL LEAK LARGE	2.4E-08	2.3E+02	5.6E-06
52	HPIMVEL001C	SIS-MOV-001C EXTERNAL LEAK LARGE	2.4E-08	2.3E+02	5.6E-06
53	HPIMVEL001A	SIS-MOV-001A EXTERNAL LEAK LARGE	2.4E-08	2.3E+02	5.6E-06
54	RSSMVELCSS001C	CSS-MOV-001C EXTERNAL LEAK LARGE	2.4E-08	2.3E+02	5.6E-06

Table 19.1-165 Basic Events (Hardware Failure, Human Error) RAW of POS 4-3 for LPSD PRA (Sheet 5 of 62)

Rank	Basic Event ID	Basic Event Description	Basic Event Probability	RAW	FV Importance
55	RSSMVELCSS001D	CSS-MOV-001D EXTERNAL LEAK LARGE	2.4E-08	2.3E+02	5.6E-06
56	RSSMVELCSS001A	CSS-MOV-001A EXTERNAL LEAK LARGE	2.4E-08	2.3E+02	5.6E-06
57	RSSMVELCSS001B	CSS-MOV-001B EXTERNAL LEAK LARGE	2.4E-08	2.3E+02	5.6E-06
58	EPSCBFO52UAT-BCD	EPS 52/UATB,C,D (BREAKER) FAIL TO OPEN (CCF)	5.2E-06	2.3E+02	1.2E-03
59	EPSCBFO52RAT-BCD	EPS 52/RATB,C,D (BREAKER) FAIL TO OPEN (CCF)	5.2E-06	2.3E+02	1.2E-03
60	EPSCF4CBSC52RAT-123	EPS 52/RATB,C,D (BREAKER) SPURIOUS CLOSE (CCF)	2.9E-08	2.3E+02	6.6E-06
61	EPSCF4CBSC52UAT-234	EPS 52/UATB,C,D (BREAKER) SPURIOUS CLOSE (CCF)	2.9E-08	2.3E+02	6.6E-06
62	SWSCF4PMBD001-134	EWS-MPP-001A,C,D (EWS PUMP) FAIL TO RE-START (CCF)	1.5E-05	1.7E+02	2.6E-03
63	CWSCF4PCBD001-134	NCS-MPP-001A,C,D (CCW PUMP) FAIL TO RE-START (CCF)	8.4E-06	1.7E+02	1.4E-03
64	SWSCF4MVOD503-134	EWS-MOV-503A,C,D FAIL TO OPEN (CCF)	4.2E-06	1.7E+02	7.2E-04
65	SWSCF4CVOD502-234	EWS-VLV-502A,C,D FAIL TO RE-OPEN (CCF)	5.0E-08	1.6E+02	8.1E-06
66	CWSCF4CVOD016-134	NCS-VLV-016A,C,D FAIL TO RE-OPEN (CCF)	5.0E-08	1.6E+02	8.1E-06
67	SWSCF4CVOD602-134	EWS-VLV-602A,C,D FAIL TO RE-OPEN (CCF)	5.0E-08	1.6E+02	8.1E-06
68	RWSPNELPIPE2	RWS PIPING BETWEEN RWSP AND RWS-VLV-002 EXTERNAL LEAK LARGE	6.0E-10	1.6E+02	9.6E-08

Table 19.1-165 Basic Events (Hardware Failure, Human Error) RAW of POS 4-3 for LPSD PRA (Sheet 6 of 62)

Rank	Basic Event ID	Basic Event Description	Basic Event Probability	RAW	FV Importance
69	RSSOO02P	(HE) FAIL TO RE-START THE RHR PUMPS WHEN THE LOOP EVENT OCCURS	2.6E-03	1.3E+02	3.3E-01
70	EPSCF4CBSO72DB-ALL	EPS 72/DBA,B,C,D (BREAKER) SPURIOUS OPEN (CCF)	1.6E-07	1.2E+02	1.8E-05
71	EPSCF4BYFFBAT-ALL	A,B,C,D CLASS-1E BATTERY FAIL TO OPERATE (CCF)	5.0E-08	1.2E+02	5.7E-06
72	EPSCF4DLLRGTG-ALL	CLASS-1E GTG A,B,C, D FAIL TO LOAD AND RUN AFTER FIRST HOUR OF OPERATION (CCF)	9.9E-04	1.1E+02	1.0E-01
73	EPSCF4DLADGTG-ALL	CLASS-1E GTG A,B,C,D FAIL TO START (CCF)	2.1E-04	1.1E+02	2.2E-02
74	EPSCF4DLSRGTG-ALL	CLASS-1E GTG A,B FAIL TO LOAD AND RUN DURING FIRST HOUR OF OPERATION (CCF)	1.6E-04	1.1E+02	1.7E-02
75	EPSCF4SEFFGTG-ALL	CLASS-1E GTG A,B,C, D SEQUENCER FAIL TO OPERATE (CCF)	3.8E-05	1.1E+02	4.0E-03
76	EPSCF4CBTD52EPS-ALL	EPS 52/EPSA,B,C, D (BREAKER) FAIL TO CLOSE (CCF)	2.0E-05	1.1E+02	2.1E-03
77	EPSCF4CBSO52EPS-ALL	EPS 52/EPSA,B,C, D (BREAKER) SPURIOUS OPEN (CCF)	1.6E-07	1.1E+02	1.7E-05
78	EPSCF4IVFFIBC-ALL	CLASS-1E UPS UNIT A,B,C,D FAIL TO OPERATE (CCF)	1.5E-06	1.1E+02	1.6E-04
79	EPSCF4CBSO52UA-ALL	EPS 52/UAA,B,C,D (BREAKER) SPURIOUS OPEN (CCF)	1.6E-07	1.1E+02	1.7E-05
80	EPSCF4CBSO72AU-ALL	EPS 72/AUA,B,C,D (BREAKER) SPURIOUS OPEN (CCF)	1.6E-07	1.1E+02	1.7E-05
81	EPSCF4CBSO52LC-234	EPS 52/LCB,C,D (BREAKER) SPURIOUS OPEN (CCF)	2.9E-08	1.0E+02	2.9E-06
82	EPSCF4CBSO52STL-123	EPS 52/STLB,C,D (BREAKER) SPURIOUS OPEN (CCF)	2.9E-08	1.0E+02	2.9E-06

Table 19.1-165 Basic Events (Hardware Failure, Human Error) RAW of POS 4-3 for LPSD PRA (Sheet 7 of 62)

Rank	Basic Event ID	Basic Event Description	Basic Event Probability	RAW	FV Importance
83	EPSCF4CBSO52STH-234	EPS 52/STHB,C,D (BREAKER) SPURIOUS OPEN (CCF)	2.9E-08	1.0E+02	2.9E-06
84	EPSCBFO52UAT-ALL	EPS 52/UATA,B,C,D (BREAKER) FAIL TO OPEN (CCF)	2.0E-05	7.2E+01	1.4E-03
85	EPSCBFO52RAT-ALL	EPS 52/RATA,B,C,D (BREAKER) FAIL TO OPEN (CCF)	2.0E-05	7.2E+01	1.4E-03
86	SGNBTSWCCF1	GROUP-1 APPLICATION SOFTWARE CCF	1.0E-04	6.5E+01	6.4E-03
87	EPSCBFO52UAT-AD	EPS 52/UATA,D (BREAKER) FAIL TO OPEN (CCF)	5.0E-06	6.4E+01	3.1E-04
88	EPSCBFO52RAT-AD	EPS 52/RATA,D (BREAKER) FAIL TO OPEN (CCF)	5.0E-06	6.4E+01	3.1E-04
89	EPSCF4CBSC52UAT-14	EPS 52/UATA,D (BREAKER) SPURIOUS CLOSE (CCF)	3.4E-08	6.4E+01	2.1E-06
90	EPSCF4CBSC52RAT-34	EPS 52/RATA,D (BREAKER) SPURIOUS CLOSE (CCF)	3.4E-08	6.4E+01	2.1E-06
91	EPSCF4CBSO52STL-34	EPS 52/STLA,D (BREAKER) SPURIOUS OPEN (CCF)	3.4E-08	5.5E+01	1.8E-06
92	EPSCF4CBSO52STH-14	EPS 52/STHA,D (BREAKER) SPURIOUS OPEN (CCF)	3.4E-08	5.5E+01	1.8E-06
93	CWSPNELCCWC	NCS CWS TRAIN C PIPING EXTERNAL LEAK LARGE	1.1E-06	5.4E+01	6.1E-05
94	CWSRIEL001C1	NCS-MHX-001C (C-CCW HX) TUBE EXTERNAL LEAK LARGE	7.2E-07	5.4E+01	3.8E-05
95	CWSPMEL001C	NCS-MPP-001C (C-CCW PUMP) EXTERNAL LEAK LARGE	1.9E-07	5.4E+01	1.0E-05
96	HPIXVEL119C	NCS-VLV-119C EXTERNAL LEAK LARGE	7.2E-08	5.4E+01	3.8E-06

Table 19.1-165 Basic Events (Hardware Failure, Human Error) RAW of POS 4-3 for LPSD PRA (Sheet 8 of 62)

Rank	Basic Event ID	Basic Event Description	Basic Event Probability	RAW	FV Importance
97	CWSXVEL101C	NCS-VLV-101C EXTERNAL LEAK LARGE	7.2E-08	5.4E+01	3.8E-06
98	HPIXVEL116C	NCS-VLV-116C EXTERNAL LEAK LARGE	7.2E-08	5.4E+01	3.8E-06
99	HPIXVEL115C	NCS-VLV-115C EXTERNAL LEAK LARGE	7.2E-08	5.4E+01	3.8E-06
100	CWSXVEL104C	NCS-VLV-104C EXTERNAL LEAK LARGE	7.2E-08	5.4E+01	3.8E-06
101	HPIXVEL111C	NCS-VLV-111C EXTERNAL LEAK LARGE	7.2E-08	5.4E+01	3.8E-06
102	CWSXVEL018C	NCS-VLV-018C EXTERNAL LEAK LARGE	7.2E-08	5.4E+01	3.8E-06
103	CWSXVEL008C	NCS-VLV-008C EXTERNAL LEAK LARGE	7.2E-08	5.4E+01	3.8E-06
104	CWSXVEL005C	NCS-VLV-005C EXTERNAL LEAK LARGE	7.2E-08	5.4E+01	3.8E-06
105	HPIXVEL114C	NCS-VLV-114C EXTERNAL LEAK LARGE	7.2E-08	5.4E+01	3.8E-06
106	CWSCVEL016C	NCS-VLV-016C EXTERNAL LEAK LARGE	4.8E-08	5.4E+01	2.6E-06
107	CWSMVEL020C	NCS-MOV-020C EXTERNAL LEAK LARGE	2.4E-08	5.4E+01	1.3E-06
108	CWSMVEL007C	NCS-MOV-007C EXTERNAL LEAK LARGE	2.4E-08	5.4E+01	1.3E-06
109	CWSPNELCCWD	NCS CWS TRAIN D PIPING EXTERNAL LEAK LARGE	9.1E-07	5.4E+01	4.8E-05
110	CWSRIEL001D1	NCS-MHX-001D (D-CCW HX) TUBE EXTERNAL LEAK LARGE	7.2E-07	5.4E+01	3.8E-05

Table 19.1-165 Basic Events (Hardware Failure, Human Error) RAW of POS 4-3 for LPSD PRA (Sheet 9 of 62)

Rank	Basic Event ID	Basic Event Description	Basic Event Probability	RAW	FV Importance
111	CWSPMEL001D	NCS-MPP-001D (D-CCW PUMP) EXTERNAL LEAK LARGE	1.9E-07	5.4E+01	1.0E-05
112	HPIXVEL115D	NCS-VLV-115D EXTERNAL LEAK LARGE	7.2E-08	5.4E+01	3.8E-06
113	CWSXVEL101D	NCS-VLV-101D EXTERNAL LEAK LARGE	7.2E-08	5.4E+01	3.8E-06
114	HPIXVEL116D	NCS-VLV-116D EXTERNAL LEAK LARGE	7.2E-08	5.4E+01	3.8E-06
115	CWSXVEL005D	NCS-VLV-005D EXTERNAL LEAK LARGE	7.2E-08	5.4E+01	3.8E-06
116	HPIXVEL119D	NCS-VLV-119D EXTERNAL LEAK LARGE	7.2E-08	5.4E+01	3.8E-06
117	HPIXVEL114D	NCS-VLV-114D EXTERNAL LEAK LARGE	7.2E-08	5.4E+01	3.8E-06
118	HPIXVEL111D	NCS-VLV-111D EXTERNAL LEAK LARGE	7.2E-08	5.4E+01	3.8E-06
119	CWSXVEL008D	NCS-VLV-008D EXTERNAL LEAK LARGE	7.2E-08	5.4E+01	3.8E-06
120	CWSXVEL018D	NCS-VLV-018D EXTERNAL LEAK LARGE	7.2E-08	5.4E+01	3.8E-06
121	CWSXVEL104D	NCS-VLV-104D EXTERNAL LEAK LARGE	7.2E-08	5.4E+01	3.8E-06
122	CWSCVEL016D	NCS-VLV-016D EXTERNAL LEAK LARGE	4.8E-08	5.4E+01	2.5E-06
123	CWSMVEL007D	NCS-MOV-007D EXTERNAL LEAK LARGE	2.4E-08	5.4E+01	1.3E-06
124	CWSMVEL020D	NCS-MOV-020D EXTERNAL LEAK LARGE	2.4E-08	5.4E+01	1.3E-06

Table 19.1-165 Basic Events (Hardware Failure, Human Error) RAW of POS 4-3 for LPSD PRA (Sheet 10 of 62)

Rank	Basic Event ID	Basic Event Description	Basic Event Probability	RAW	FV Importance
125	CWSPNELCCWC1	NCS CWS C1-HEADER LINE PIPING EXTERNAL LEAK LARGE	7.9E-07	5.4E+01	4.2E-05
126	CWSCF4RHPF001-123	NCS-MHX-001A,B,C (CCW HX) PLUG / FOUL(CCF)	6.0E-09	5.0E+01	2.9E-07
127	CWSCF4RHPF001-234	NCS-MHX-001B,C.D (CCW HX) PLUG / FOUL(CCF)	6.0E-09	5.0E+01	2.9E-07
128	EPSBSFFDCCD	D-CLASS 1E DC SWITCHBOARD	5.8E-06	4.9E+01	2.8E-04
129	EPSBSFFMCD	D-CLASS 1E 6.9KV SWITCHGEAR FAILURE	5.8E-06	4.9E+01	2.8E-04
130	EPSCBFO52RAT-BD	EPS 52/RATB,D (BREAKER) FAIL TO OPEN (CCF)	5.0E-06	4.8E+01	2.3E-04
131	EPSCBFO52UAT-BD	EPS 52/UATB,D (BREAKER) FAIL TO OPEN (CCF)	5.0E-06	4.8E+01	2.3E-04
132	EPSCF4CBSC52UAT-24	EPS 52/UATB,D (BREAKER) SPURIOUS CLOSE (CCF)	3.4E-08	4.8E+01	1.6E-06
133	EPSCF4CBSC52RAT-13	EPS 52/RATB,D (BREAKER) SPURIOUS CLOSE (CCF)	3.4E-08	4.8E+01	1.6E-06
134	SWSCF4PMBD001-123	EWS-MPP-001A,B,C (EWS PUMP) FAIL TO RE-START (CCF)	1.5E-05	4.7E+01	6.9E-04
135	CWSCF4PCBD001-123	NCS-MPP-001A,B,C (CCW PUMP) FAIL TO RE-START (CCF)	8.4E-06	4.6E+01	3.8E-04
136	RSSRXEL001D	RHS-MHX-001D (D-CS/RHR HX) SHELL EXTERNAL LEAK LARGE	9.6E-08	4.6E+01	4.4E-06
137	RSSRXEL001C	RHS-MHX-001C (C-CS/RHR HX) SHELL EXTERNAL LEAK LARGE	9.6E-08	4.6E+01	4.4E-06
138	RSSXVEL144D	NCS-VLV-144D EXTERNAL LEAK LARGE	7.2E-08	4.6E+01	3.3E-06

Table 19.1-165 Basic Events (Hardware Failure, Human Error) RAW of POS 4-3 for LPSD PRA (Sheet 11 of 62)

Rank	Basic Event ID	Basic Event Description	Basic Event Probability	RAW	FV Importance
139	RSSXVEL144C	NCS-VLV-144C EXTERNAL LEAK LARGE	7.2E-08	4.6E+01	3.3E-06
140	RSSXVEL141D	NCS-VLV-141D EXTERNAL LEAK LARGE	7.2E-08	4.6E+01	3.3E-06
141	RSSXVEL141C	NCS-VLV-141C EXTERNAL LEAK LARGE	7.2E-08	4.6E+01	3.3E-06
142	RSSMVEL145D	NCS-MOV-145D EXTERNAL LEAK LARGE	2.4E-08	4.6E+01	1.1E-06
143	RSSMVEL145C	NCS-MOV-145C EXTERNAL LEAK LARGE	2.4E-08	4.6E+01	1.1E-06
144	SWSCF4MVOD503-123	EWS-MOV-503A,B,C FAIL TO OPEN (CCF)	4.2E-06	4.6E+01	1.9E-04
145	CWSXVEL033B	NCS-VLV-033B EXTERNAL LEAK LARGE	7.2E-08	4.4E+01	3.1E-06
146	CWSXVEL034B	NCS-VLV-034B EXTERNAL LEAK LARGE	7.2E-08	4.4E+01	3.1E-06
147	RSSXVEL125D	NCS-VLV-125D EXTERNAL LEAK LARGE	7.2E-08	4.4E+01	3.1E-06
148	RSSXVEL128C	NCS-VLV-128C EXTERNAL LEAK LARGE	7.2E-08	4.4E+01	3.1E-06
149	RSSXVEL131C	NCS-VLV-131C EXTERNAL LEAK LARGE	7.2E-08	4.4E+01	3.1E-06
150	RSSXVEL125C	NCS-VLV-125C EXTERNAL LEAK LARGE	7.2E-08	4.4E+01	3.1E-06
151	RSSXVEL128D	NCS-VLV-128D EXTERNAL LEAK LARGE	7.2E-08	4.4E+01	3.1E-06
152	RSSXVEL131D	NCS-VLV-131D EXTERNAL LEAK LARGE	7.2E-08	4.4E+01	3.1E-06

Table 19.1-165 Basic Events (Hardware Failure, Human Error) RAW of POS 4-3 for LPSD PRA (Sheet 12 of 62)

Rank	Basic Event ID	Basic Event Description	Basic Event Probability	RAW	FV Importance
153	CHIXVEL315B	NCS-VLV-315B EXTERNAL LEAK LARGE	7.2E-08	4.4E+01	3.1E-06
154	CHIXVEL301B	NCS-VLV-301B EXTERNAL LEAK LARGE	7.2E-08	4.4E+01	3.1E-06
155	CHIXVEL312B	NCS-VLV-312B EXTERNAL LEAK LARGE	7.2E-08	4.4E+01	3.1E-06
156	CHIXVEL311B	NCS-VLV-311B EXTERNAL LEAK LARGE	7.2E-08	4.4E+01	3.1E-06
157	RCSCF2ILFF12-ALL	RCS WATER LEVEL SENSOR (NARROW) RCS-LT-014,015 FAIL TO OPERATE CCF	1.6E-06	4.3E+01	6.6E-05
158	CVCAVCD024C	RHS-AOV-024C FAIL TO CLOSE	1.2E-03	4.2E+01	4.9E-02
159	CVCAVCD024B	RHS-AOV-024B FAIL TO CLOSE	1.2E-03	4.2E+01	4.9E-02
160	ACWCVEL306B	NCS-VLV-306B EXTERNAL LEAK LARGE	4.8E-08	4.1E+01	1.9E-06
161	ACWMVEL316B	NCS-MOV-316B EXTERNAL LEAK LARGE	2.4E-08	4.1E+01	9.7E-07
162	SWSCF3PMYR001BCD-ALL	EWS-MPP-001B,C,D (EWS PUMP) FAIL TO RUN (CCF)	1.2E-07	4.1E+01	4.8E-06
163	CWSCF3PCYR001BCD-ALL	NCS-MPP-001B,C,D (CCW PUMP) FAIL TO RUN (CCF)	6.7E-08	4.1E+01	2.7E-06
164	CWSCF3RHPF001BCD-ALL	NCS-MHX-001B,C,D (CCW HX) PLUG / FOUL(CCF)	3.6E-08	4.1E+01	1.5E-06
165	EPSCF4CBSO72DB-124	EPS 72/DBA,B,C (BREAKER) SPURIOUS OPEN (CCF)	2.9E-08	4.0E+01	1.1E-06
166	EPSCF4CBSO72DB-123	EPS 72/DBB,C,D (BREAKER) SPURIOUS OPEN (CCF)	2.9E-08	4.0E+01	1.1E-06

Table 19.1-165 Basic Events (Hardware Failure, Human Error) RAW of POS 4-3 for LPSD PRA (Sheet 13 of 62)

Rank	Basic Event ID	Basic Event Description	Basic Event Probability	RAW	FV Importance
167	EPSCF4BYFFBAT-124	A,B,C CLASS-1E BATTERY FAIL TO OPERATE (CCF)	1.2E-08	4.0E+01	4.8E-07
168	EPSCF4BYFFBAT-123	B,C,D CLASS-1E BATTERY FAIL TO OPERATE (CCF)	1.2E-08	4.0E+01	4.8E-07
169	SWSCF4CVOD602-123	EWS-VLV-602A,B,C FAIL TO RE-OPEN (CCF)	5.0E-08	3.8E+01	1.8E-06
170	CWSCF4CVOD016-123	NCS-VLV-016A,B,C FAIL TO RE-OPEN (CCF)	5.0E-08	3.8E+01	1.8E-06
171	SWSCF4CVOD502-124	EWS-VLV-502A,B,C FAIL TO RE-OPEN (CCF)	5.0E-08	3.8E+01	1.8E-06
172	EPSCF4CBSO72DB-12	EPS 72/DBB,C (BREAKER) SPURIOUS OPEN (CCF)	3.4E-08	3.7E+01	1.2E-06
173	EPSCF4BYFFBAT-12	B,C CLASS-1E BATTERY FAIL TO OPERATE (CCF)	1.9E-08	3.7E+01	6.9E-07
174	EPSCF4CBSO52LC-123	EPS 52/LCA,B,C (BREAKER) SPURIOUS OPEN (CCF)	2.9E-08	3.7E+01	1.0E-06
175	EPSCF4CBSO52STL-124	EPS 52/STLA,B,C (BREAKER) SPURIOUS OPEN (CCF)	2.9E-08	3.7E+01	1.0E-06
176	EPSCF4CBSO52STH-123	EPS 52/STHA,B,C (BREAKER) SPURIOUS OPEN (CCF)	2.9E-08	3.7E+01	1.0E-06
177	CWSCF3RHPF001BCD-23	NCS-MHX-001C,D (CCW HX) PLUG / FOUL(CCF)	1.8E-08	3.6E+01	6.2E-07
178	SWSCF3PMYR001BCD-23	EWS-MPP-001C,D (EWS PUMP) FAIL TO RUN (CCF)	0.0E+00	3.6E+01	0.0E+00
179	CWSCF3PCYR001BCD-23	NCS-MPP-001C,D (CCW PUMP) FAIL TO RUN (CCF)	0.0E+00	3.6E+01	0.0E+00
180	HPIOO02S	(HE) FAIL TO START STANDBY SAFETY INJECTION PUMP	4.9E-03	3.4E+01	1.6E-01

Table 19.1-165 Basic Events (Hardware Failure, Human Error) RAW of POS 4-3 for LPSD PRA (Sheet 14 of 62)

Rank	Basic Event ID	Basic Event Description	Basic Event Probability	RAW	FV Importance
181	EPSCF4CBSO52LC-14	EPS 52/LCA,D (BREAKER) SPURIOUS OPEN (CCF)	3.4E-08	3.2E+01	1.0E-06
182	CWSCF4RHPF001-14	NCS-MHX-001A,D (CCW HX) PLUG / FOUL(CCF)	1.2E-08	3.2E+01	3.7E-07
183	HPICF2PMAD001BD-ALL	SIS-MPP-001B,D (SI PUMP) FAIL TO START (CCF)	1.5E-04	3.1E+01	4.5E-03
184	HPICF2PMSR001BD-ALL	SIS-MPP-001B,D (SI PUMP) FAIL TO RUN DURING FIRST HOUR OF OPERATION (CCF)	1.7E-05	3.1E+01	4.9E-04
185	RWSCF4SUPR001-ALL	SIS-SST-001A,B,C,D (ESS/CS STRAINER) PLUG DURING OPERATION (CCF)	9.7E-06	3.1E+01	2.9E-04
186	HPICF2PMLR001BD-ALL	SIS-MPP-001B,D (SI PUMP) FAIL TO RUN AFTER FIRST HOUR OF OPERATION (CCF)	5.7E-06	3.1E+01	1.7E-04
187	RWSCF4SUPR001-123	SIS-SST-001B,C,D (ESS/CS STRAINER) PLUG DURING OPERATION (CCF)	3.7E-06	3.0E+01	1.1E-04
188	RWSCF4SUPR001-234	SIS-SST-001A,B,D (ESS/CS STRAINER) PLUG DURING OPERATION (CCF)	3.7E-06	3.0E+01	1.1E-04
189	RWSCF4SUPR001-23	SIS-SST-001B,D (ESS/CS STRAINER) PLUG DURING OPERATION (CCF)	3.0E-06	3.0E+01	8.8E-05
190	HPICF2CVOD010BD-ALL	SIS-VLV-010B,D FAIL TO OPEN (CCF)	2.0E-06	3.0E+01	5.9E-05
191	HPICF2CVOD004BD-ALL	SIS-VLV-004B,D FAIL TO OPEN (CCF)	2.0E-06	3.0E+01	5.9E-05
192	HPICF2CVOD013BD-ALL	SIS-VLV-013B,D FAIL TO OPEN (CCF)	2.0E-06	3.0E+01	5.9E-05
193	HPICF2CVOD012BD-ALL	SIS-VLV-012B,D FAIL TO OPEN (CCF)	2.0E-06	3.0E+01	5.9E-05

Table 19.1-165 Basic Events (Hardware Failure, Human Error) RAW of POS 4-3 for LPSD PRA (Sheet 15 of 62)

Rank	Basic Event ID	Basic Event Description	Basic Event Probability	RAW	FV Importance
194	LOAOO02LC	(HE) FAIL TO ISOLATE THE LEAKAGE TRAIN OF RHR SYSTEM	2.6E-03	3.0E+01	7.4E-02
195	RSSOO02LINE+P	(HE) FAIL TO ESTABLISH RHR INJECTION LINE AND START STANBY PUMP	3.8E-03	3.0E+01	1.1E-01
196	SWSCF4PMBD001-124	EWS-MPP-001A,B,D (EWS PUMP) FAIL TO RE-START (CCF)	1.5E-05	2.5E+01	3.6E-04
197	CWSCF4PCBD001-124	NCS-MPP-001A,B,D (CCW PUMP) FAIL TO RE-START (CCF)	8.4E-06	2.5E+01	2.0E-04
198	SWSCF4MVOD503-124	EWS-MOV-503A,B,D FAIL TO OPEN (CCF)	4.2E-06	2.4E+01	9.7E-05
199	EPSCBFO52RAT-ABC	EPS 52/RATA,B,C (BREAKER) FAIL TO OPEN (CCF)	5.2E-06	2.4E+01	1.2E-04
200	EPSCBFO52UAT-ABC	EPS 52/UATA,B,C (BREAKER) FAIL TO OPEN (CCF)	5.2E-06	2.4E+01	1.2E-04
201	EPSCF4CBSC52RAT-124	EPS 52/RATA,B,C (BREAKER) SPURIOUS CLOSE (CCF)	2.9E-08	2.4E+01	6.6E-07
202	EPSCF4CBSC52UAT-123	EPS 52/UATA,B,C (BREAKER) SPURIOUS CLOSE (CCF)	2.9E-08	2.4E+01	6.6E-07
203	CHIPMYR001B	CVS-MPP-001B (B-CHI PUMP) FAIL TO RUN	1.2E-04	2.3E+01	2.7E-03
204	CHIORPR002B	CVS-SRO-002B (ORIFICE) PLUG	2.4E-05	2.3E+01	5.3E-04
205	CHICVOD129B	CVS-VLV-129B FAIL TO OPEN	1.2E-05	2.3E+01	2.7E-04
206	CHICVOD131B	CVS-VLV-131B FAIL TO OPEN	1.2E-05	2.3E+01	2.7E-04
207	CHIXVPR126B	CVS-VLV-126B PLUG	2.4E-06	2.3E+01	5.3E-05

Table 19.1-165 Basic Events (Hardware Failure, Human Error) RAW of POS 4-3 for LPSD PRA (Sheet 16 of 62)

Rank	Basic Event ID	Basic Event Description	Basic Event Probability	RAW	FV Importance
208	CHIXVPR130B	CVS-VLV-130B PLUG	2.4E-06	2.3E+01	5.3E-05
209	CHICVPR129B	CVS-VLV-129B PLUG	2.4E-06	2.3E+01	5.3E-05
210	CHIXVPR132B	CVS-VLV-132B PLUG	2.4E-06	2.3E+01	5.3E-05
211	CHICVPR131B	CVS-VLV-131B PLUG	2.4E-06	2.3E+01	5.3E-05
212	CHIORPRCCW071	NCS-FE-071 (ORIFICE) PLUG	2.4E-05	2.3E+01	5.3E-04
213	CHIORPRCCW077	NCS-FE-077 (ORIFICE) PLUG	2.4E-05	2.3E+01	5.3E-04
214	CHIXVPR311B	NCS-VLV-311B PLUG	2.4E-06	2.3E+01	5.3E-05
215	CHIXVPR301B	NCS-VLV-301B PLUG	2.4E-06	2.3E+01	5.3E-05
216	CHIXVPR312B	NCS-VLV-312B PLUG	2.4E-06	2.3E+01	5.3E-05
217	CHIXVPR315B	NCS-VLV-315B PLUG	2.4E-06	2.3E+01	5.3E-05
218	EPSBSFFDCCD1	D1-CLASS 1E DC SWITCHBOARD	5.8E-06	2.3E+01	1.3E-04
219	EPSCBSO72DDDD	EPS 72/DDDD (BREAKER) SPURIOUS OPEN	3.0E-06	2.3E+01	6.6E-05
220	EPSCBSO72DDAD	EPS 72/DDAD (BREAKER) SPURIOUS OPEN	3.0E-06	2.3E+01	6.6E-05
221	EPSCF4CBSO72DD2-23	EPS 72/DDBD,DD (BREAKER) SPURIOUS OPEN (CCF)	3.4E-08	2.3E+01	7.4E-07

Table 19.1-165 Basic Events (Hardware Failure, Human Error) RAW of POS 4-3 for LPSD PRA (Sheet 17 of 62)

Rank	Basic Event ID	Basic Event Description	Basic Event Probability	RAW	FV Importance
222	EPSCF4CBSO72DD1-12	EPS 72/DDBB,AD (BREAKER) SPURIOUS OPEN (CCF)	3.4E-08	2.3E+01	7.4E-07
223	EPSCF4CBSO72DD1-13	EPS 72/DDBC,AD (BREAKER) SPURIOUS OPEN (CCF)	3.4E-08	2.3E+01	7.4E-07
224	EPSCF4CBSO72DD2-13	EPS 72/DDBA,DD (BREAKER) SPURIOUS OPEN (CCF)	3.4E-08	2.3E+01	7.4E-07
225	EPSCF4CBSO72DD2-123	EPS 72/DDBA,BD,DD (BREAKER) SPURIOUS OPEN (CCF)	2.9E-08	2.3E+01	6.4E-07
226	EPSCF4CBSO72DD1-123	EPS 72/DDBB,BC,AD (BREAKER) SPURIOUS OPEN (CCF)	2.9E-08	2.3E+01	6.4E-07
227	EPSCF4CBSO72DD2-ALL	EPS 72/DDDA,BA,BD,DD (BREAKER) SPURIOUS OPEN (CCF)	1.6E-07	2.3E+01	3.4E-06
228	EPSCF4CBSO72DD1-ALL	EPS 72/DDAA,BB,BC,AD (BREAKER) SPURIOUS OPEN (CCF)	1.6E-07	2.3E+01	3.4E-06
229	EPSCF4CBSO72DD1-14	EPS 72/DDAA,AD (BREAKER) SPURIOUS OPEN (CCF)	3.4E-08	2.3E+01	7.2E-07
230	EPSCF4CBSO72DD2-34	EPS 72/DDDA,DD (BREAKER) SPURIOUS OPEN (CCF)	3.4E-08	2.3E+01	7.2E-07
231	EPSCF4CBSO72DD2-134	EPS 72/DDDA,BA,DD (BREAKER) SPURIOUS OPEN (CCF)	2.9E-08	2.3E+01	6.3E-07
232	EPSCF4CBSO72DD1-124	EPS 72/DDAA,BB,AD (BREAKER) SPURIOUS OPEN (CCF)	2.9E-08	2.3E+01	6.3E-07
233	EPSCF4CBSO72DD2-234	EPS 72/DDDA,BD,DD (BREAKER) SPURIOUS OPEN (CCF)	2.9E-08	2.3E+01	6.3E-07
234	EPSCF4CBSO72DD1-134	EPS 72/DDAA,BC,AD (BREAKER) SPURIOUS OPEN (CCF)	2.9E-08	2.3E+01	6.3E-07
235	CHICF2MVCD031BC-ALL	CVS-LCV-031B,C FAIL TO CLOSE (CCF)	1.4E-04	2.1E+01	2.7E-03

Table 19.1-165 Basic Events (Hardware Failure, Human Error) RAW of POS 4-3 for LPSD PRA (Sheet 18 of 62)

Rank	Basic Event ID	Basic Event Description	Basic Event Probability	RAW	FV Importance
236	CHICF4MVOD031-ALL	CVS-LCV-031D,E,F,G FAIL TO OPEN (CCF)	1.1E-04	2.1E+01	2.3E-03
237	CHIAVFC048	CVS-FCV-048 FAIL TO CONTROL	7.2E-05	2.1E+01	1.4E-03
238	CHIORPR048	CVS-FE-048 (ORIFICE) PLUG	2.4E-05	2.1E+01	4.8E-04
239	CHIORPR003	CVS-SRO-003 (ORIFICE) PLUG	2.4E-05	2.1E+01	4.8E-04
240	CHIAVCM048	CVS-FCV-048 SPURIOUS CLOSE	4.8E-06	2.1E+01	9.6E-05
241	CHIAVCM159	CVS-AOV-159 SPURIOUS CLOSE	4.8E-06	2.1E+01	9.6E-05
242	CHIAVCM146	CVS-AOV-146 SPURIOUS CLOSE	4.8E-06	2.1E+01	9.6E-05
243	CHIMVPR152	CVS-MOV-152 PLUG	2.4E-06	2.1E+01	4.8E-05
244	CHIAVPR048	CVS-FCV-048 PLUG	2.4E-06	2.1E+01	4.8E-05
245	CHIAVPR146	CVS-AOV-146 PLUG	2.4E-06	2.1E+01	4.8E-05
246	CHIMVPR151	CVS-MOV-151 PLUG	2.4E-06	2.1E+01	4.8E-05
247	CHIXVPR147	CVS-VLV-147 PLUG	2.4E-06	2.1E+01	4.8E-05
248	CHICVPR161	CVS-VLV-161 PLUG	2.4E-06	2.1E+01	4.8E-05
249	CHICVPR160	CVS-VLV-160 PLUG	2.4E-06	2.1E+01	4.8E-05

Table 19.1-165 Basic Events (Hardware Failure, Human Error) RAW of POS 4-3 for LPSD PRA (Sheet 19 of 62)

Rank	Basic Event ID	Basic Event Description	Basic Event Probability	RAW	FV Importance
250	CHIAVPR159	CVS-AOV-159 PLUG	2.4E-06	2.1E+01	4.8E-05
251	CHIXVPR133	CVS-VLV-133 PLUG	2.4E-06	2.1E+01	4.8E-05
252	CHICVPR153	CVS-VLV-153 PLUG	2.4E-06	2.1E+01	4.8E-05
253	CHIXVPR145	CVS-VLV-145 PLUG	2.4E-06	2.1E+01	4.8E-05
254	CHIMVCM151	CVS-MOV-151 SPURIOUS CLOSE	9.6E-07	2.1E+01	1.9E-05
255	CHIMVCM152	CVS-MOV-152 SPURIOUS CLOSE	9.6E-07	2.1E+01	1.9E-05
256	CHIRIEL001	CVS-MHX-001 (REGENERATIVE HX) TUBE EXTERNAL LEAK LARGE	7.2E-07	2.1E+01	1.4E-05
257	CHIPMEL001B	CVS-MPP-001B (B-CHI PUMP) EXTERNAL LEAK LARGE	1.9E-07	2.1E+01	3.8E-06
258	CHIPMEL001A	CVS-MPP-001A (A-CHI PUMP) EXTERNAL LEAK LARGE	1.9E-07	2.1E+01	3.8E-06
259	CHIAVIL155	CVS-AOV-155 INTERNAL LEAK LARGE	1.2E-07	2.1E+01	2.4E-06
260	CHIXVEL147	CVS-VLV-147 EXTERNAL LEAK LARGE	7.2E-08	2.1E+01	1.4E-06
261	CHIXVEL133	CVS-VLV-133 EXTERNAL LEAK LARGE	7.2E-08	2.1E+01	1.4E-06
262	CHIXVEL145	CVS-VLV-145 EXTERNAL LEAK LARGE	7.2E-08	2.1E+01	1.4E-06
263	CHIXVEL144	CVS-VLV-144 EXTERNAL LEAK LARGE	7.2E-08	2.1E+01	1.4E-06

Table 19.1-165 Basic Events (Hardware Failure, Human Error) RAW of POS 4-3 for LPSD PRA (Sheet 20 of 62)

Rank	Basic Event ID	Basic Event Description	Basic Event Probability	RAW	FV Importance
264	CHIXVEL166	CVS-VLV-166 EXTERNAL LEAK LARGE	7.2E-08	2.1E+01	1.4E-06
265	CHIXVEL171B	CVS-VLV-171B EXTERNAL LEAK LARGE	7.2E-08	2.1E+01	1.4E-06
266	CHIXVEL167	CVS-VLV-167 EXTERNAL LEAK LARGE	7.2E-08	2.1E+01	1.4E-06
267	CHIXVEL132A	CVS-VLV-132A EXTERNAL LEAK LARGE	7.2E-08	2.1E+01	1.4E-06
268	CHIXVEL170B	CVS-VLV-170B EXTERNAL LEAK LARGE	7.2E-08	2.1E+01	1.4E-06
269	CHIXVEL130A	CVS-VLV-130A EXTERNAL LEAK LARGE	7.2E-08	2.1E+01	1.4E-06
270	CHIXVEL164	CVS-VLV-164 EXTERNAL LEAK LARGE	7.2E-08	2.1E+01	1.4E-06
271	CHIXVEL126A	CVS-VLV-126A EXTERNAL LEAK LARGE	7.2E-08	2.1E+01	1.4E-06
272	CHIXVEL163	CVS-VLV-163 EXTERNAL LEAK LARGE	7.2E-08	2.1E+01	1.4E-06
273	CHIXVEL168	CVS-VLV-168 EXTERNAL LEAK LARGE	7.2E-08	2.1E+01	1.4E-06
274	CHIXVEL130B	CVS-VLV-130B EXTERNAL LEAK LARGE	7.2E-08	2.1E+01	1.4E-06
275	CHIXVEL132B	CVS-VLV-132B EXTERNAL LEAK LARGE	7.2E-08	2.1E+01	1.4E-06
276	CHIXVEL126B	CVS-VLV-126B EXTERNAL LEAK LARGE	7.2E-08	2.1E+01	1.4E-06
277	CHIXVEL173	CVS-VLV-173 EXTERNAL LEAK LARGE	7.2E-08	2.1E+01	1.4E-06

Table 19.1-165 Basic Events (Hardware Failure, Human Error) RAW of POS 4-3 for LPSD PRA (Sheet 21 of 62)

Rank	Basic Event ID	Basic Event Description	Basic Event Probability	RAW	FV Importance
278	CHICVEL129B	CVS-VLV-129B EXTERNAL LEAK LARGE	4.8E-08	2.1E+01	9.6E-07
279	CHICVEL125	CVS-VLV-125 EXTERNAL LEAK LARGE	4.8E-08	2.1E+01	9.6E-07
280	CHICVEL131B	CVS-VLV-131B EXTERNAL LEAK LARGE	4.8E-08	2.1E+01	9.6E-07
281	CHICVEL131A	CVS-VLV-131A EXTERNAL LEAK LARGE	4.8E-08	2.1E+01	9.6E-07
282	CHICVEL129A	CVS-VLV-129A EXTERNAL LEAK LARGE	4.8E-08	2.1E+01	9.6E-07
283	CHICVEL160	CVS-VLV-160 EXTERNAL LEAK LARGE	4.8E-08	2.1E+01	9.6E-07
284	CHICVEL161	CVS-VLV-161 EXTERNAL LEAK LARGE	4.8E-08	2.1E+01	9.6E-07
285	CHICVEL153	CVS-VLV-153 EXTERNAL LEAK LARGE	4.8E-08	2.1E+01	9.6E-07
286	CHIMVEL151	CVS-MOV-151 EXTERNAL LEAK LARGE	2.4E-08	2.1E+01	4.8E-07
287	CHIMVEL152	CVS-MOV-152 EXTERNAL LEAK LARGE	2.4E-08	2.1E+01	4.8E-07
288	CHIMVEL031C	CVS-LCV-031C EXTERNAL LEAK LARGE	2.4E-08	2.1E+01	4.8E-07
289	CHIMVEL031B	CVS-LCV-031B EXTERNAL LEAK LARGE	2.4E-08	2.1E+01	4.8E-07
290	CHIAVEL048	CVS-FCV-048 EXTERNAL LEAK LARGE	2.2E-08	2.1E+01	4.3E-07
291	CHIAVEL050	CVS-FCV-050 EXTERNAL LEAK LARGE	2.2E-08	2.1E+01	4.3E-07

Table 19.1-165 Basic Events (Hardware Failure, Human Error) RAW of POS 4-3 for LPSD PRA (Sheet 22 of 62)

Rank	Basic Event ID	Basic Event Description	Basic Event Probability	RAW	FV Importance
292	CHIAVEL165	CVS-AOV-165 EXTERNAL LEAK LARGE	2.2E-08	2.1E+01	4.3E-07
293	CHIAVEL159	CVS-AOV-159 EXTERNAL LEAK LARGE	2.2E-08	2.1E+01	4.3E-07
294	CHIAVEL155	CVS-AOV-155 EXTERNAL LEAK LARGE	2.2E-08	2.1E+01	4.3E-07
295	CHIAVEL146	CVS-AOV-146 EXTERNAL LEAK LARGE	2.2E-08	2.1E+01	4.3E-07
296	CHIPNELPIPE1	CVS CHARGING INJECTION LINE PIPING EXTERNAL LEAK LARGE	6.0E-10	2.1E+01	1.2E-08
297	CWSORPR039	NCS-FE-039 (ORIFICE) PLUG	2.4E-05	2.1E+01	4.8E-04
298	CWSXVPR034B	NCS-VLV-034B PLUG	2.4E-06	2.1E+01	4.8E-05
299	CWSXVPR033B	NCS-VLV-033B PLUG	2.4E-06	2.1E+01	4.8E-05
300	CHICF4MVOD031-34	CVS-LCV-031F,G FAIL TO OPEN (CCF)	1.3E-05	2.1E+01	2.6E-04
301	CHICF4MVOD031-23	CVS-LCV-031E,F FAIL TO OPEN (CCF)	1.3E-05	2.1E+01	2.6E-04
302	CHICF4MVOD031-12	CVS-LCV-031D,E FAIL TO OPEN (CCF)	1.3E-05	2.1E+01	2.6E-04
303	CHICF4MVOD031-14	CVS-LCV-031D,G FAIL TO OPEN (CCF)	1.3E-05	2.1E+01	2.6E-04
304	CHICVOD592	CVS-VLV-592 FAIL TO OPEN	1.2E-05	2.1E+01	2.4E-04
305	CHICVOD595	CVS-VLV-595 FAIL TO OPEN	1.2E-05	2.1E+01	2.4E-04

Table 19.1-165 Basic Events (Hardware Failure, Human Error) RAW of POS 4-3 for LPSD PRA (Sheet 23 of 62)

Rank	Basic Event ID	Basic Event Description	Basic Event Probability	RAW	FV Importance
306	CHIXVPR591	CVS-VLV-591 PLUG	2.4E-06	2.1E+01	4.8E-05
307	CHICVPR595	CVS-VLV-595 PLUG	2.4E-06	2.1E+01	4.8E-05
308	CHICVPR592	CVS-VLV-592 PLUG	2.4E-06	2.1E+01	4.8E-05
309	CHIXVEL591	CVS-VLV-591 EXTERNAL LEAK LARGE	7.2E-08	2.1E+01	1.4E-06
310	RWSTNEL002	RWS-MTK-002 (RWSAT) EXTERNAL LEAK LARGE	4.8E-08	2.1E+01	9.6E-07
311	CHICVEL595	CVS-VLV-595 EXTERNAL LEAK LARGE	4.8E-08	2.1E+01	9.6E-07
312	CHICVEL594	CVS-VLV-594 EXTERNAL LEAK LARGE	4.8E-08	2.1E+01	9.6E-07
313	CHICVEL592	CVS-VLV-592 EXTERNAL LEAK LARGE	4.8E-08	2.1E+01	9.6E-07
314	CHIMVEL031E	CVS-LCV-031E EXTERNAL LEAK LARGE	2.4E-08	2.1E+01	4.8E-07
315	CHIMVEL031G	CVS-LCV-031G EXTERNAL LEAK LARGE	2.4E-08	2.1E+01	4.8E-07
316	CHIMVEL031D	CVS-LCV-031D EXTERNAL LEAK LARGE	2.4E-08	2.1E+01	4.8E-07
317	CHIMVEL031F	CVS-LCV-031F EXTERNAL LEAK LARGE	2.4E-08	2.1E+01	4.8E-07
318	CHIPNELPIPE2	CVS PIPING BETWEEN RWSAT AND CHI PUMP EXTERNAL LEAK LARGE	6.0E-10	2.1E+01	1.2E-08
319	CHICF4MVOD031-124	CVS-LCV-031D,E,G FAIL TO OPEN (CCF)	2.6E-06	2.1E+01	5.1E-05

Table 19.1-165 Basic Events (Hardware Failure, Human Error) RAW of POS 4-3 for LPSD PRA (Sheet 24 of 62)

Rank	Basic Event ID	Basic Event Description	Basic Event Probability	RAW	FV Importance
320	CHICF4MVOD031-123	CVS-LCV-031D,E,F FAIL TO OPEN (CCF)	2.6E-06	2.1E+01	5.1E-05
321	CHICF4MVOD031-234	CVS-LCV-031E,F,G FAIL TO OPEN (CCF)	2.6E-06	2.1E+01	5.1E-05
322	CHICF4MVOD031-134	CVS-LCV-031D,F,G FAIL TO OPEN (CCF)	2.6E-06	2.1E+01	5.1E-05
323	ACWMVPR316B	NCS-MOV-316B PLUG	2.4E-06	2.1E+01	4.7E-05
324	ACWCVPR306B	NCS-VLV-306B PLUG	2.4E-06	2.1E+01	4.7E-05
325	ACWMVCM316B	NCS-MOV-316B SPURIOUS CLOSE	9.6E-07	2.1E+01	1.9E-05
326	CHICF2ILFFVCT-ALL	VCT WATER LEVEL SENSOR CVS-LT-030,031 FAIL TO OPERATE CCF	1.6E-06	2.1E+01	3.1E-05
327	EPSCF2CBSO52LC1-ALL	EPS 52/LCA1,D1 (BREAKER) SPURIOUS CLOSE (CCF)	2.8E-07	2.1E+01	5.6E-06
328	EPSCF2CBSO52LL1-ALL	EPS 52/LLAA, LLAD (BREAKER) SPURIOUS OPEN (CCF)	2.8E-07	2.1E+01	5.6E-06
329	EPSCF2CBSO52LL2-ALL	EPS 52/LLDA, LLDD (BREAKER) SPURIOUS OPEN (CCF)	2.8E-07	2.1E+01	5.6E-06
330	SWSCF4PMBD001-234	EWS-MPP-001B,C,D (EWS PUMP) FAIL TO RE-START (CCF)	1.5E-05	2.0E+01	2.9E-04
331	CWSCF4PCBD001-234	NCS-MPP-001B,C,D (CCW PUMP) FAIL TO RE-START (CCF)	8.4E-06	1.9E+01	1.5E-04
332	EPSCF4DLLRGTG-234	CLASS-1E GTG B,C, D FAIL TO LOAD AND RUN AFTER FIRST HOUR OF OPERATION (CCF)	2.5E-04	1.9E+01	4.5E-03
333	EPSCF4DLADGTG-124	CLASS-1E GTG B,C,D FAIL TO START (CCF)	5.2E-05	1.9E+01	9.6E-04

Table 19.1-165 Basic Events (Hardware Failure, Human Error) RAW of POS 4-3 for LPSD PRA (Sheet 25 of 62)

Rank	Basic Event ID	Basic Event Description	Basic Event Probability	RAW	FV Importance
334	EPSCF4DLSRGTG-234	CLASS-1E GTG B,C, D FAIL TO LOAD AND RUN DURING FIRST HOUR OF OPERATION (CCF)	3.9E-05	1.9E+01	7.2E-04
335	EPSCF4SEFFGTG-234	CLASS-1E GTG B,C, D SEQUENCER FAIL TO OPERATE (CCF)	1.3E-05	1.9E+01	2.3E-04
336	EPSCF4CBTD52EPS-234	EPS 52/EPSB,C, D (BREAKER) FAIL TO CLOSE (CCF)	5.2E-06	1.9E+01	9.5E-05
337	EPSCF4CBSO52EPS-234	EPS 52/EPS B,C, D (BREAKER) SPURIOUS OPEN (CCF)	2.9E-08	1.9E+01	5.3E-07
338	SWSCF4MVOD503-234	EWS-MOV-503B,C,D FAIL TO OPEN (CCF)	4.2E-06	1.9E+01	7.5E-05
339	SWSCF4CVOD602-124	EWS-VLV-602A,B,D FAIL TO RE-OPEN (CCF)	5.0E-08	1.8E+01	8.4E-07
340	SWSCF4CVOD502-134	EWS-VLV-502A,B,D FAIL TO RE-OPEN (CCF)	5.0E-08	1.8E+01	8.4E-07
341	CWSCF4CVOD016-124	NCS-VLV-016A,B,D FAIL TO RE-OPEN (CCF)	5.0E-08	1.8E+01	8.4E-07
342	EPSCF4IVFFIBC-234	CLASS-1E UPS UNIT B,C,D FAIL TO OPERATE (CCF)	5.0E-07	1.6E+01	7.3E-06
343	EPSCF4CBSO52UA-123	EPS 52/UAB,C,D (BREAKER) SPURIOUS OPEN (CCF)	2.9E-08	1.6E+01	4.2E-07
344	EPSCF4CBSO72AU-234	EPS 72/AUB,C,D (BREAKER) SPURIOUS OPEN (CCF)	2.9E-08	1.6E+01	4.2E-07
345	EPSCBFO52RAT-CD	EPS 52/RATC,D (BREAKER) FAIL TO OPEN (CCF)	5.0E-06	1.4E+01	6.5E-05
346	EPSCBFO52UAT-CD	EPS 52/UATC,D (BREAKER) FAIL TO OPEN (CCF)	5.0E-06	1.4E+01	6.5E-05
347	EPSCF4CBSC52RAT-23	EPS 52/RATC,D (BREAKER) SPURIOUS CLOSE (CCF)	3.4E-08	1.4E+01	4.4E-07

Table 19.1-165 Basic Events (Hardware Failure, Human Error) RAW of POS 4-3 for LPSD PRA (Sheet 26 of 62)

Rank	Basic Event ID	Basic Event Description	Basic Event Probability	RAW	FV Importance
348	EPSCF4CBSC52UAT-34	EPS 52/UATC,D (BREAKER) SPURIOUS CLOSE (CCF)	3.4E-08	1.4E+01	4.4E-07
349	RSSRIEL001B	RHS-MHX-001B (B-CS/RHR HX) TUBE EXTERNAL LEAK LARGE	7.2E-07	1.4E+01	9.3E-06
350	RSSPNEL04B	RHS B-CS/RHR PUMP LINE PIPING EXTERNAL LEAK LARGE	2.5E-07	1.4E+01	3.3E-06
351	RSSPMEL001B	RHS-MPP-001B (B-CS/RHR PUMP) EXTERNAL LEAK LARGE	1.9E-07	1.4E+01	2.5E-06
352	RSSXVEL013B	RHS-VLV-013B EXTERNAL LEAK LARGE	7.2E-08	1.4E+01	9.3E-07
353	RSSXVEL002B	CSS-VLV-002B EXTERNAL LEAK LARGE	7.2E-08	1.4E+01	9.3E-07
354	RSSCVEL004B	RHS-VLV-004B EXTERNAL LEAK LARGE	4.8E-08	1.4E+01	6.2E-07
355	CFACVEL012	CSS-VLV-012 EXTERNAL LEAK LARGE	4.8E-08	1.4E+01	6.2E-07
356	RSSPNEL05B	RHS RHR OPERATION SUCTION LINE B (OUTSIDE C/V) PIPING EXTERNAL LEAK LARGE	4.7E-08	1.4E+01	6.1E-07
357	RSSPNEL12B	RHS-FCV-021 LINE PIPING EXTERNAL LEAK LARGE	2.6E-08	1.4E+01	3.3E-07
358	RSSMVEL004B	CSS-MOV-004B EXTERNAL LEAK LARGE	2.4E-08	1.4E+01	3.1E-07
359	RSSMVEL021B	RHS-MOV-021B EXTERNAL LEAK LARGE	2.4E-08	1.4E+01	3.1E-07
360	RSSAVEL023	RHS-HCV-023 EXTERNAL LEAK LARGE	2.2E-08	1.4E+01	2.8E-07
361	RSSAVEL021	RHS-FCV-021 EXTERNAL LEAK LARGE	2.2E-08	1.4E+01	2.8E-07

Table 19.1-165 Basic Events (Hardware Failure, Human Error) RAW of POS 4-3 for LPSD PRA (Sheet 27 of 62)

Rank	Basic Event ID	Basic Event Description	Basic Event Probability	RAW	FV Importance
362	RSSPNEL03B	CSS PIPING BETWEEN CSS-MOV-001B AND B-CS/RHR PUMP EXTERNAL LEAK LARGE	6.1E-09	1.4E+01	7.9E-08
363	RSSPNEL08B	RHS ALTERNATE CORE COOLING LINE B (OUTSIDE C/V) PIPING EXTERNAL LEAK LARGE	1.8E-09	1.4E+01	2.3E-08
364	RSSRIEL001A	RHS-MHX-001A (A-CS/RHR HX) TUBE EXTERNAL LEAK LARGE	7.2E-07	1.3E+01	8.9E-06
365	RSSPNEL04A	RHS A-CS/RHR PUMP LINE PIPING EXTERNAL LEAK LARGE	2.6E-07	1.3E+01	3.2E-06
366	RSSPMEL001A	RHS-MPP-001A (A-CS/RHR PUMP) EXTERNAL LEAK LARGE	1.9E-07	1.3E+01	2.4E-06
367	RSSXVEL013A	RHS-VLV-013A EXTERNAL LEAK LARGE	7.2E-08	1.3E+01	8.9E-07
368	RSSXVEL031A	RHS-VLV-031A EXTERNAL LEAK LARGE	7.2E-08	1.3E+01	8.9E-07
369	RSSXVEL002A	CSS-VLV-002A EXTERNAL LEAK LARGE	7.2E-08	1.3E+01	8.9E-07
370	RSSPNEL05A	RHS RHR OPERATION SUCTION LINE A (OUTSIDE C/V) PIPING EXTERNAL LEAK LARGE	5.8E-08	1.3E+01	7.1E-07
371	RSSCVEL004A	RHS-VLV-004A EXTERNAL LEAK LARGE	4.8E-08	1.3E+01	5.9E-07
372	RSSMVEL004A	CSS-MOV-004A EXTERNAL LEAK LARGE	2.4E-08	1.3E+01	3.0E-07
373	RSSPNEL11A	RHS PIPING BETWEEN RHS-VLV-031A AND ALTERNATE CORE COOLING LINE EXTERNAL LEAK LARGE	1.9E-08	1.3E+01	2.3E-07
374	RSSPNEL03A	CSS PIPING BETWEEN CSS-MOV-001A AND A-CS/RHR PUMP EXTERNAL LEAK LARGE	6.7E-09	1.3E+01	8.2E-08

Table 19.1-165 Basic Events (Hardware Failure, Human Error) RAW of POS 4-3 for LPSD PRA (Sheet 28 of 62)

Rank	Basic Event ID	Basic Event Description	Basic Event Probability	RAW	FV Importance
375	RSSPNEL10A	CSS PIPING BETWEEN RHS-VLV-034A AND A-CS/RHR PUMP SUCTION LINE EXTERNAL LEAK LARGE	3.8E-09	1.3E+01	4.6E-08
376	RSSPNEL08A	RHS ALTERNATE CORE COOLING LINE A (OUTSIDE C/V) PIPING EXTERNAL LEAK LARGE	1.8E-09	1.3E+01	2.2E-08
377	RWSXVEL021	RWS-VLV-021 EXTERNAL LEAK LARGE	7.2E-08	1.3E+01	8.8E-07
378	RWSXVEL006A	RWS-VLV-006A EXTERNAL LEAK LARGE	7.2E-08	1.3E+01	8.8E-07
379	RWSXVEL005	RWS-VLV-005 EXTERNAL LEAK LARGE	7.2E-08	1.3E+01	8.8E-07
380	RWSXVEL014	RWS-VLV-014 EXTERNAL LEAK LARGE	7.2E-08	1.3E+01	8.8E-07
381	RWSXVEL013A	RWS-VLV-013A EXTERNAL LEAK LARGE	7.2E-08	1.3E+01	8.8E-07
382	RSSRIEL001C	RHS-MHX-001C (C-CS/RHR HX) TUBE EXTERNAL LEAK LARGE	7.2E-07	1.2E+01	7.8E-06
383	RSSPNEL04C	RHS C-CS/RHR PUMP LINE PIPING EXTERNAL LEAK LARGE	2.6E-07	1.2E+01	2.8E-06
384	RSSPMEL001C	RHS-MPP-001C (C-CS/RHR PUMP) EXTERNAL LEAK LARGE	1.9E-07	1.2E+01	2.1E-06
385	RSSXVEL002C	CSS-VLV-002C EXTERNAL LEAK LARGE	7.2E-08	1.2E+01	7.8E-07
386	RSSXVEL013C	RHS-VLV-013C EXTERNAL LEAK LARGE	7.2E-08	1.2E+01	7.8E-07
387	RSSPNEL05C	RHS RHR OPERATION SUCTION LINE C (OUTSIDE C/V) PIPING EXTERNAL LEAK LARGE	5.8E-08	1.2E+01	6.2E-07
388	RSSCVEL004C	RHS-VLV-004C EXTERNAL LEAK LARGE	4.8E-08	1.2E+01	5.2E-07

Table 19.1-165 Basic Events (Hardware Failure, Human Error) RAW of POS 4-3 for LPSD PRA (Sheet 29 of 62)

Rank	Basic Event ID	Basic Event Description	Basic Event Probability	RAW	FV Importance
389	RSSPNEL12C	RHS-FCV-031 LINE PIPING EXTERNAL LEAK LARGE	2.6E-08	1.2E+01	2.8E-07
390	RSSMVEL004C	CSS-MOV-004C EXTERNAL LEAK LARGE	2.4E-08	1.2E+01	2.6E-07
391	RSSMVEL021C	RHS-MOV-021C EXTERNAL LEAK LARGE	2.4E-08	1.2E+01	2.6E-07
392	RSSAVEL033	RHS-HCV-033 EXTERNAL LEAK LARGE	2.2E-08	1.2E+01	2.3E-07
393	RSSAVEL031	RHS-FCV-031 EXTERNAL LEAK LARGE	2.2E-08	1.2E+01	2.3E-07
394	RSSPNEL03C	CSS PIPING BETWEEN CSS-MOV-001C AND C-CS/RHR PUMP EXTERNAL LEAK LARGE	6.7E-09	1.2E+01	7.2E-08
395	RSSPNEL08C	RHS ALTERNATE CORE COOLING LINE C (OUTSIDE C/V) PIPING EXTERNAL LEAK LARGE	1.8E-09	1.2E+01	1.9E-08
396	RSSRIEL001D	RHS-MHX-001D (D-CS/RHR HX) TUBE EXTERNAL LEAK LARGE	7.2E-07	1.2E+01	7.6E-06
397	RSSPNEL04D	RHS D-CS/RHR PUMP LINE PIPING EXTERNAL LEAK LARGE	2.6E-07	1.2E+01	2.7E-06
398	RSSPMEL001D	RHS-MPP-001D (D-CS/RHR PUMP) EXTERNAL LEAK LARGE	1.9E-07	1.2E+01	2.0E-06
399	RSSXVEL013D	RHS-VLV-013D EXTERNAL LEAK LARGE	7.2E-08	1.2E+01	7.6E-07
400	RSSXVEL031D	RHS-VLV-031D EXTERNAL LEAK LARGE	7.2E-08	1.2E+01	7.6E-07
401	RSSXVEL002D	CSS-VLV-002D EXTERNAL LEAK LARGE	7.2E-08	1.2E+01	7.6E-07
402	RSSCVEL004D	RHS-VLV-004D EXTERNAL LEAK LARGE	4.8E-08	1.2E+01	5.1E-07

Table 19.1-165 Basic Events (Hardware Failure, Human Error) RAW of POS 4-3 for LPSD PRA (Sheet 30 of 62)

Rank	Basic Event ID	Basic Event Description	Basic Event Probability	RAW	FV Importance
403	RSSPNEL05D	RHS RHR OPERATION SUCTION LINE D (OUTSIDE C/V) PIPING EXTERNAL LEAK LARGE	4.7E-08	1.2E+01	5.0E-07
404	RSSMVEL004D	CSS-MOV-004D EXTERNAL LEAK LARGE	2.4E-08	1.2E+01	2.5E-07
405	RSSPNEL11D	RHS PIPING BETWEEN RHS-VLV-031D AND ALTERNATE CORE COOLING LINE EXTERNAL LEAK LARGE	1.9E-08	1.2E+01	2.0E-07
406	RSSPNEL03D	CSS PIPING BETWEEN CSS-MOV-001D AND D-CS/RHR PUMP EXTERNAL LEAK LARGE	6.1E-09	1.2E+01	6.4E-08
407	RSSPNEL10D	CSS PIPING BETWEEN RHS-VLV-034D AND D-CS/RHR PUMP SUCTION LINE EXTERNAL LEAK LARGE	3.8E-09	1.2E+01	4.0E-08
408	RSSPNEL08D	RHS ALTERNATE CORE COOLING LINE D (OUTSIDE C/V) PIPING EXTERNAL LEAK LARGE	1.8E-09	1.2E+01	1.9E-08
409	HPIPMEL001D	SIS-MPP-001D (D-SI PUMP) EXTERNAL LEAK LARGE	1.9E-07	1.1E+01	2.0E-06
410	HPIPMEL001B	SIS-MPP-001B (B-SI PUMP) EXTERNAL LEAK LARGE	1.9E-07	1.1E+01	2.0E-06
411	HPIPMEL001A	SIS-MPP-001A (A-SI PUMP) EXTERNAL LEAK LARGE	1.9E-07	1.1E+01	2.0E-06
412	HPIPMEL001C	SIS-MPP-001C (C-SI PUMP) EXTERNAL LEAK LARGE	1.9E-07	1.1E+01	2.0E-06
413	HPIPNELINJSA	SIS A-SI PUMP DISCHARGE LINE (OUTSIDE C/V) PIPING EXTERNAL LEAK LARGE	9.2E-08	1.1E+01	9.6E-07
414	HPIPNELINJSC	SIS C-SI PUMP DISCHARGE LINE (OUTSIDE C/V) PIPING EXTERNAL LEAK LARGE	9.2E-08	1.1E+01	9.6E-07
415	HPICVEL004C	SIS-VLV-004C EXTERNAL LEAK LARGE	4.8E-08	1.1E+01	5.0E-07

Table 19.1-165 Basic Events (Hardware Failure, Human Error) RAW of POS 4-3 for LPSD PRA (Sheet 31 of 62)

Rank	Basic Event ID	Basic Event Description	Basic Event Probability	RAW	FV Importance
416	HPICVEL004A	SIS-VLV-004A EXTERNAL LEAK LARGE	4.8E-08	1.1E+01	5.0E-07
417	HPIPNELSUCTLC	SIS C-SI PUMP SUCTION LINE (OUTSIDE C/V) PIPING EXTERNAL LEAK LARGE	3.3E-08	1.1E+01	3.4E-07
418	HPIPNELSUCTLA	SIS A-SI PUMP SUCTION LINE (OUTSIDE C/V) PIPING EXTERNAL LEAK LARGE	3.3E-08	1.1E+01	3.4E-07
419	HPIMVEL009A	SIS-MOV-009A EXTERNAL LEAK LARGE	2.4E-08	1.1E+01	2.5E-07
420	HPIMVEL009C	SIS-MOV-009C EXTERNAL LEAK LARGE	2.4E-08	1.1E+01	2.5E-07
421	RWSPMEL001B	RWS-MPP-001B (B-RWR PUMP) EXTERNAL LEAK LARGE	1.9E-07	1.1E+01	2.0E-06
422	RWSPMEL001A	RWS-MPP-001A (A-RWR PUMP) EXTERNAL LEAK LARGE	1.9E-07	1.1E+01	2.0E-06
423	RWSXVEL006B	RWS-VLV-006B EXTERNAL LEAK LARGE	7.2E-08	1.1E+01	7.4E-07
424	RWSXVEL013B	RWS-VLV-013B EXTERNAL LEAK LARGE	7.2E-08	1.1E+01	7.4E-07
425	RSSCF2IPFFHEADAB-ALL	CS/RHR HEADER PRESSURE SENSOR (TRAIN A,B) FAIL TO OPERATE CCF	1.3E-06	1.1E+01	1.2E-05
426	RSSCF4PMBD001-ALL	RHS-MPP-001A,B,C,D (CS/RHR PUMP) FAIL TO RE-START (CCF)	2.5E-05	1.0E+01	2.4E-04
427	RSSCF4PMYR001-ALL	RHS-MPP-001A,B,C,D (CS/RHR PUMP) FAIL TO RUN (CCF)	1.5E-06	1.0E+01	1.4E-05
428	HPIPNELINJSB	SIS B-SI PUMP DISCHARGE LINE (OUTSIDE C/V) PIPING EXTERNAL LEAK LARGE	9.0E-08	1.0E+01	8.2E-07

Table 19.1-165 Basic Events (Hardware Failure, Human Error) RAW of POS 4-3 for LPSD PRA (Sheet 32 of 62)

Rank	Basic Event ID	Basic Event Description	Basic Event Probability	RAW	FV Importance
429	HPIPNELINJSD	SIS D-SI PUMP DISCHARGE LINE (OUTSIDE C/V) PIPING EXTERNAL LEAK LARGE	9.0E-08	1.0E+01	8.2E-07
430	RSSXVEL034D	RHS-VLV-034D EXTERNAL LEAK LARGE	7.2E-08	1.0E+01	6.5E-07
431	HPICVEL004B	SIS-VLV-004B EXTERNAL LEAK LARGE	4.8E-08	1.0E+01	4.3E-07
432	HPICVEL004D	SIS-VLV-004D EXTERNAL LEAK LARGE	4.8E-08	1.0E+01	4.3E-07
433	HPIMVEL009B	SIS-MOV-009B EXTERNAL LEAK LARGE	2.4E-08	1.0E+01	2.2E-07
434	HPIMVEL009D	SIS-MOV-009D EXTERNAL LEAK LARGE	2.4E-08	1.0E+01	2.2E-07
435	RSSMVEL021D	RHS-MOV-021D EXTERNAL LEAK LARGE	2.4E-08	1.0E+01	2.2E-07
436	RSSPNEL07D	CSS C/V SPRAY LINE D (OUTSIDE C/V) PIPING EXTERNAL LEAK LARGE	1.8E-09	1.0E+01	1.6E-08
437	RSSXVEL034A	RHS-VLV-034A EXTERNAL LEAK LARGE	7.2E-08	9.9E+00	6.4E-07
438	RWSXVEL028	SFS-VLV-028 EXTERNAL LEAK LARGE	7.2E-08	9.9E+00	6.4E-07
439	RWSXVEL103A	SFS-VLV-103A EXTERNAL LEAK LARGE	7.2E-08	9.9E+00	6.4E-07
440	RWSXVEL066A	NCS-VLV-066A EXTERNAL LEAK LARGE	7.2E-08	9.9E+00	6.4E-07
441	RWSXVEL066B	NCS-VLV-066B EXTERNAL LEAK LARGE	7.2E-08	9.9E+00	6.4E-07
442	RWSXVEL103B	SFS-VLV-103B EXTERNAL LEAK LARGE	7.2E-08	9.9E+00	6.4E-07

Table 19.1-165 Basic Events (Hardware Failure, Human Error) RAW of POS 4-3 for LPSD PRA (Sheet 33 of 62)

Rank	Basic Event ID	Basic Event Description	Basic Event Probability	RAW	FV Importance
443	RWSXVEL101	RWS-VLV-101 EXTERNAL LEAK LARGE	7.2E-08	9.9E+00	6.4E-07
444	RWSCVEL037	LMS-VLV-037 EXTERNAL LEAK LARGE	4.8E-08	9.9E+00	4.3E-07
445	RWSCVEL065B	NCS-VLV-065B EXTERNAL LEAK LARGE	4.8E-08	9.9E+00	4.3E-07
446	RWSCVEL027	SFS-VLV-027 EXTERNAL LEAK LARGE	4.8E-08	9.9E+00	4.3E-07
447	RWSCVEL065A	NCS-VLV-065A EXTERNAL LEAK LARGE	4.8E-08	9.9E+00	4.3E-07
448	RSSPNEL07A	CSS C/V SPRAY LINE A (OUTSIDE C/V) PIPING EXTERNAL LEAK LARGE	1.8E-09	9.9E+00	1.6E-08
449	RWSPNELPIPE4	RWS PIPING BETWEEN RWS-VLV-004 AND RWS-VLV-021 EXTERNAL LEAK LARGE	6.0E-10	9.9E+00	5.3E-09
450	EPSCF4DLLRGTG-134	CLASS-1E GTG A,C, D FAIL TO LOAD AND RUN AFTER FIRST HOUR OF OPERATION (CCF)	2.5E-04	9.8E+00	2.2E-03
451	EPSCF4DLADGTG-234	CLASS-1E GTG A,C,D FAIL TO START (CCF)	5.2E-05	9.8E+00	4.6E-04
452	EPSCF4DLSRGTG-134	CLASS-1E GTG A,C, D FAIL TO LOAD AND RUN DURING FIRST HOUR OF OPERATION (CCF)	3.9E-05	9.8E+00	3.5E-04
453	EPSCF4SEFFGTG-134	CLASS-1E GTG A,C, D SEQUENCER FAIL TO OPERATE (CCF)	1.3E-05	9.8E+00	1.1E-04
454	EPSCF4CBTD52EPS-134	EPS 52/EPSA,C, D (BREAKER) FAIL TO CLOSE (CCF)	5.2E-06	9.8E+00	4.6E-05
455	EPSCF4CBSO52EPS-134	EPS 52/EPSA,C, D (BREAKER) SPURIOUS OPEN (CCF)	2.9E-08	9.8E+00	2.6E-07

Table 19.1-165 Basic Events (Hardware Failure, Human Error) RAW of POS 4-3 for LPSD PRA (Sheet 34 of 62)

Rank	Basic Event ID	Basic Event Description	Basic Event Probability	RAW	FV Importance
456	RSSCF4RHPR001-ALL	RHS-MHX-001A,B,C,D (CS/RHR HX) PLUG / FOUL (CCF)	4.8E-06	9.8E+00	4.2E-05
457	RSSCF4CVOD004-ALL	RHS-VLV-004A,B,C,D FAIL TO OPEN (CCF)	4.3E-07	9.8E+00	3.8E-06
458	HPIOO02S-DP2	(HE) FAIL TO START STANDBY SAFETY INJECTION PUMP	5.5E-02	9.6E+00	5.0E-01
459	SWSCF4CVOD502-123	EWS-VLV-502B,C,D FAIL TO RE-OPEN (CCF)	5.0E-08	9.5E+00	4.3E-07
460	CWSCF4CVOD016-234	NCS-VLV-016B,C,D FAIL TO RE-OPEN (CCF)	5.0E-08	9.5E+00	4.3E-07
461	SWSCF4CVOD602-234	EWS-VLV-602B,C,D FAIL TO RE-OPEN (CCF)	5.0E-08	9.5E+00	4.3E-07
462	RWSCVEL012B	RWS-VLV-012B EXTERNAL LEAK LARGE	4.8E-08	9.4E+00	4.0E-07
463	RWSCVEL012A	RWS-VLV-012A EXTERNAL LEAK LARGE	4.8E-08	9.4E+00	4.0E-07
464	SWSCF4PMBD001-34	EWS-MPP-001C,D (EWS PUMP) FAIL TO RE-START (CCF)	7.1E-05	9.4E+00	6.0E-04
465	CWSCF4PCBD001-34	NCS-MPP-001C,D (CCW PUMP) FAIL TO RE-START (CCF)	3.9E-05	9.3E+00	3.2E-04
466	RWSMVEL004	RWS-MOV-004 EXTERNAL LEAK LARGE	2.4E-08	9.1E+00	2.0E-07
467	EPSCF4DLLRGTG-124	CLASS-1E GTG A,B,D FAIL TO LOAD AND RUN AFTER FIRST HOUR OF OPERATION (CCF)	2.5E-04	8.8E+00	1.9E-03
468	EPSCF4DLADGTG-123	CLASS-1E GTG A,B,D FAIL TO START (CCF)	5.2E-05	8.8E+00	4.1E-04
469	EPSCF4DLSRGTG-124	CLASS-1E GTG A,B,D FAIL TO LOAD AND RUN DURING FIRST HOUR OF OPERATION (CCF)	3.9E-05	8.8E+00	3.1E-04

Table 19.1-165 Basic Events (Hardware Failure, Human Error) RAW of POS 4-3 for LPSD PRA (Sheet 35 of 62)

Rank	Basic Event ID	Basic Event Description	Basic Event Probability	RAW	FV Importance
470	EPSCF4SEFFGTG-124	CLASS-1E GTG A,B,D SEQUENCER FAIL TO OPERATE (CCF)	1.3E-05	8.8E+00	9.8E-05
471	EPSCF4CBTD52EPS-124	EPS 52/EPSA,B,D (BREAKER) FAIL TO CLOSE (CCF)	5.2E-06	8.8E+00	4.0E-05
472	EPSCF4CBSO52EPS-124	EPS 52/EPSA,B, D (BREAKER) SPURIOUS OPEN (CCF)	2.9E-08	8.8E+00	2.3E-07
473	HPIPNELSUCTLB	SIS B-SI PUMP SUCTION LINE (OUTSIDE C/V) PIPING EXTERNAL LEAK LARGE	3.1E-08	8.8E+00	2.4E-07
474	HPIPNELSUCTLD	SIS D-SI PUMP SUCTION LINE (OUTSIDE C/V) PIPING EXTERNAL LEAK LARGE	3.1E-08	8.8E+00	2.4E-07
475	SWSCF4MVOD503-34	EWS-MOV-503C,D FAIL TO OPEN (CCF)	8.3E-06	8.7E+00	6.4E-05
476	SWSCF4PMBD001-14	EWS-MPP-001A,D (EWS PUMP) FAIL TO RE-START (CCF)	7.1E-05	8.4E+00	5.3E-04
477	CWSCF4PCBD001-14	NCS-MPP-001A,D (CCW PUMP) FAIL TO RE-START (CCF)	3.9E-05	8.4E+00	2.9E-04
478	EPSCF4DLLRGTG-123	CLASS-1E GTG A,B,C FAIL TO LOAD AND RUN AFTER FIRST HOUR OF OPERATION (CCF)	2.5E-04	8.3E+00	1.8E-03
479	EPSCF4DLADGTG-134	CLASS-1E GTG A,B,C FAIL TO START (CCF)	5.2E-05	8.3E+00	3.8E-04
480	EPSCF4DLSRGTG-123	CLASS-1E GTG A,B,C FAIL TO LOAD AND RUN DURING FIRST HOUR OF OPERATION (CCF)	3.9E-05	8.3E+00	2.9E-04
481	EPSCF4SEFFGTG-123	CLASS-1E GTG A,B,C SEQUENCER FAIL TO OPERATE (CCF)	1.3E-05	8.3E+00	9.1E-05
482	EPSCF4CBTD52EPS-123	EPS 52/EPSA,B,C (BREAKER) FAIL TO CLOSE (CCF)	5.2E-06	8.3E+00	3.8E-05

Table 19.1-165 Basic Events (Hardware Failure, Human Error) RAW of POS 4-3 for LPSD PRA (Sheet 36 of 62)

Rank	Basic Event ID	Basic Event Description	Basic Event Probability	RAW	FV Importance
483	EPSCF4CBSO52EPS-123	EPS 52/EPSA,B,C (BREAKER) SPURIOUS OPEN (CCF)	2.9E-08	8.3E+00	2.1E-07
484	CWSPNELCCWB	NCS CWS TRAIN B PIPING EXTERNAL LEAK LARGE	1.1E-06	8.1E+00	7.7E-06
485	CWSPNELCCWA	NCS CWS TRAIN A PIPING EXTERNAL LEAK LARGE	8.8E-07	8.1E+00	6.3E-06
486	CWSRIEL001A1	NCS-MHX-001A (A-CCW HX) TUBE EXTERNAL LEAK LARGE	7.2E-07	8.1E+00	5.1E-06
487	CWSRIEL001B1	NCS-MHX-001B (B-CCW HX) TUBE EXTERNAL LEAK LARGE	7.2E-07	8.1E+00	5.1E-06
488	CWSPMEL001A	NCS-MPP-001A (A-CCW PUMP) EXTERNAL LEAK LARGE	1.9E-07	8.1E+00	1.4E-06
489	CWSPMEL001B	NCS-MPP-001B (B-CCW PUMP) EXTERNAL LEAK LARGE	1.9E-07	8.1E+00	1.4E-06
490	CWSXVEL008A	NCS-VLV-008A EXTERNAL LEAK LARGE	7.2E-08	8.1E+00	5.1E-07
491	CWSXVEL005A	NCS-VLV-005A EXTERNAL LEAK LARGE	7.2E-08	8.1E+00	5.1E-07
492	HPIXVEL119A	NCS-VLV-119A EXTERNAL LEAK LARGE	7.2E-08	8.1E+00	5.1E-07
493	HPIXVEL114A	NCS-VLV-114A EXTERNAL LEAK LARGE	7.2E-08	8.1E+00	5.1E-07
494	HPIXVEL116A	NCS-VLV-116A EXTERNAL LEAK LARGE	7.2E-08	8.1E+00	5.1E-07
495	HPIXVEL111A	NCS-VLV-111A EXTERNAL LEAK LARGE	7.2E-08	8.1E+00	5.1E-07
496	HPIXVEL115A	NCS-VLV-115A EXTERNAL LEAK LARGE	7.2E-08	8.1E+00	5.1E-07

Table 19.1-165 Basic Events (Hardware Failure, Human Error) RAW of POS 4-3 for LPSD PRA (Sheet 37 of 62)

Rank	Basic Event ID	Basic Event Description	Basic Event Probability	RAW	FV Importance
497	CWSXVEL104A	NCS-VLV-104A EXTERNAL LEAK LARGE	7.2E-08	8.1E+00	5.1E-07
498	CWSXVEL018A	NCS-VLV-018A EXTERNAL LEAK LARGE	7.2E-08	8.1E+00	5.1E-07
499	CWSXVEL101A	NCS-VLV-101A EXTERNAL LEAK LARGE	7.2E-08	8.1E+00	5.1E-07
500	CWSXVEL005B	NCS-VLV-005B EXTERNAL LEAK LARGE	7.2E-08	8.1E+00	5.1E-07
501	HPIXVEL116B	NCS-VLV-116B EXTERNAL LEAK LARGE	7.2E-08	8.1E+00	5.1E-07
502	HPIXVEL115B	NCS-VLV-115B EXTERNAL LEAK LARGE	7.2E-08	8.1E+00	5.1E-07
503	HPIXVEL111B	NCS-VLV-111B EXTERNAL LEAK LARGE	7.2E-08	8.1E+00	5.1E-07
504	CWSXVEL018B	NCS-VLV-018B EXTERNAL LEAK LARGE	7.2E-08	8.1E+00	5.1E-07
505	HPIXVEL119B	NCS-VLV-119B EXTERNAL LEAK LARGE	7.2E-08	8.1E+00	5.1E-07
506	CWSXVEL104B	NCS-VLV-104B EXTERNAL LEAK LARGE	7.2E-08	8.1E+00	5.1E-07
507	HPIXVEL114B	NCS-VLV-114B EXTERNAL LEAK LARGE	7.2E-08	8.1E+00	5.1E-07
508	CWSXVEL008B	NCS-VLV-008B EXTERNAL LEAK LARGE	7.2E-08	8.1E+00	5.1E-07
509	CWSXVEL101B	NCS-VLV-101B EXTERNAL LEAK LARGE	7.2E-08	8.1E+00	5.1E-07
510	CWSCVEL016A	NCS-VLV-016A EXTERNAL LEAK LARGE	4.8E-08	8.1E+00	3.4E-07

Table 19.1-165 Basic Events (Hardware Failure, Human Error) RAW of POS 4-3 for LPSD PRA (Sheet 38 of 62)

Rank	Basic Event ID	Basic Event Description	Basic Event Probability	RAW	FV Importance
511	CWSCVEL016B	NCS-VLV-016B EXTERNAL LEAK LARGE	4.8E-08	8.1E+00	3.4E-07
512	CWSMVEL007A	NCS-MOV-007A EXTERNAL LEAK LARGE	2.4E-08	8.1E+00	1.7E-07
513	CWSMVEL020A	NCS-MOV-020A EXTERNAL LEAK LARGE	2.4E-08	8.1E+00	1.7E-07
514	CWSMVEL020B	NCS-MOV-020B EXTERNAL LEAK LARGE	2.4E-08	8.1E+00	1.7E-07
515	CWSMVEL007B	NCS-MOV-007B EXTERNAL LEAK LARGE	2.4E-08	8.1E+00	1.7E-07
516	SWSCF4MVOD503-14	EWS-MOV-503A,D FAIL TO OPEN (CCF)	8.3E-06	7.9E+00	5.8E-05
517	CWSPNELCCWA1	NCS CWS A1-HEADER LINE PIPING EXTERNAL LEAK LARGE	8.2E-07	7.9E+00	5.7E-06
518	CHIXVEL301A	NCS-VLV-301A EXTERNAL LEAK LARGE	7.2E-08	7.9E+00	5.0E-07
519	CHIXVEL315A	NCS-VLV-315A EXTERNAL LEAK LARGE	7.2E-08	7.9E+00	5.0E-07
520	CHIXVEL312A	NCS-VLV-312A EXTERNAL LEAK LARGE	7.2E-08	7.9E+00	5.0E-07
521	CHIXVEL311A	NCS-VLV-311A EXTERNAL LEAK LARGE	7.2E-08	7.9E+00	5.0E-07
522	CWSXVEL033A	NCS-VLV-033A EXTERNAL LEAK LARGE	7.2E-08	7.9E+00	5.0E-07
523	CWSXVEL034A	NCS-VLV-034A EXTERNAL LEAK LARGE	7.2E-08	7.9E+00	5.0E-07
524	EPSCF2DLLRAAC-ALL	AAC A,B FAIL TO RUN AFTER FIRST HOUR OF OPERATION (CCF)	1.5E-03	7.7E+00	9.8E-03

Table 19.1-165 Basic Events (Hardware Failure, Human Error) RAW of POS 4-3 for LPSD PRA (Sheet 39 of 62)

Rank	Basic Event ID	Basic Event Description	Basic Event Probability	RAW	FV Importance
525	EPSCF2DLADAAC-ALL	AAC A,B FAIL TO START (CCF)	3.1E-04	7.7E+00	2.0E-03
526	EPSCF2DLSRAAC-ALL	AAC A,B FAIL TO RUN DURING FIRST HOUR OF OPERATION (CCF)	2.3E-04	7.7E+00	1.6E-03
527	EPSCF2SEFFAAC-ALL	AAC A,B SEQUENCER FAIL TO OPERATE (CCF)	1.4E-04	7.7E+00	9.4E-04
528	EPSCF2CBFC52AAC2-ALL	EPS 52/AACAP,52/AACBP (BREAKER) FAIL TO CLOSE (CCF)	2.8E-05	7.7E+00	1.9E-04
529	EPSCF2CBSO5AAC2-ALL	EPS 52/AACAP,52/AACBP (BREAKER) SPURIOUS OPEN (CCF)	2.8E-07	7.7E+00	1.9E-06
530	EPSCF4IVFFIBC-134	CLASS-1E UPS UNIT A,C,D FAIL TO OPERATE (CCF)	5.0E-07	7.6E+00	3.3E-06
531	EPSCF4CBSO52UA-234	EPS 52/UAA,C,D (BREAKER) SPURIOUS OPEN (CCF)	2.9E-08	7.6E+00	1.9E-07
532	EPSCF4CBSO72AU-134	EPS 72/AUA,C,D (BREAKER) SPURIOUS OPEN (CCF)	2.9E-08	7.6E+00	1.9E-07
533	EPSOO02RDG	(HE) FAIL TO CONNECT THE ALTERNATE AC POWER SOURCE TO CLASS 1E BUS	2.1E-02	7.6E+00	1.4E-01
534	EPPBTSWCCF	AAC SOFTWARE FAILURE CCF	1.0E-04	7.6E+00	6.6E-04
535	EPSCF2CBFC52AAC-ALL	EPS 52/AACA,D (BREAKER) FAIL TO CLOSE (CCF)	2.8E-05	7.6E+00	1.9E-04
536	EPSCF2CBFO52EPS-ALL	EPS 52/EPSA,D (BREAKER) FAIL TO OPEN (CCF)	2.8E-05	7.6E+00	1.9E-04
537	EPSCF2CBFC89AAC-ALL	EPS 89/AACA,D (SELECTER CIRCUIT) FAIL TO CLOSE (CCF)	2.8E-05	7.6E+00	1.9E-04
538	EPSCF2CBSO52AAC-ALL	EPS 52/AACA,D (BREAKER) SPURIOUS OPEN (CCF)	2.8E-07	7.6E+00	1.9E-06

Table 19.1-165 Basic Events (Hardware Failure, Human Error) RAW of POS 4-3 for LPSD PRA (Sheet 40 of 62)

Rank	Basic Event ID	Basic Event Description	Basic Event Probability	RAW	FV Importance
539	EPSCF2CBSO89AAC-ALL	EPS 89/AACA,D (SELECTER CIRCUIT) SPURIOUS OPEN (CCF)	2.8E-07	7.6E+00	1.9E-06
540	EPSCF2CBSC52EPS-ALL	EPS 52/EPSA,D (BREAKER) SPURIOUS CLOSE (CCF)	2.8E-07	7.6E+00	1.9E-06
541	SWSCF4PMBD001-13	EWS-MPP-001A,C (EWS PUMP) FAIL TO RE-START (CCF)	7.1E-05	7.3E+00	4.5E-04
542	RSSMVEL021A	RHS-MOV-021A EXTERNAL LEAK LARGE	2.4E-08	7.3E+00	1.5E-07
543	CWSCF4PCBD001-13	NCS-MPP-001A,C (CCW PUMP) FAIL TO RE-START (CCF)	3.9E-05	7.2E+00	2.4E-04
544	EPSCF4IVFFIBC-124	CLASS-1E UPS UNIT A,B,D FAIL TO OPERATE (CCF)	5.0E-07	7.1E+00	3.0E-06
545	EPSCF4CBSO72AU-124	EPS 72/AUA,B,D (BREAKER) SPURIOUS OPEN (CCF)	2.9E-08	7.1E+00	1.8E-07
546	EPSCF4CBSO52UA-134	EPS 52/UAA,B,D (BREAKER) SPURIOUS OPEN (CCF)	2.9E-08	7.1E+00	1.8E-07
547	SWSCF4MVOD503-13	EWS-MOV-503A,C FAIL TO OPEN (CCF)	8.3E-06	6.9E+00	4.9E-05
548	EPSCBFO52RAT-D	EPS 52/RATD (BREAKER) FAIL TO OPEN	3.5E-04	6.9E+00	2.1E-03
549	EPSCBFO52UAT-D	EPS 52/UATD (BREAKER) FAIL TO OPEN	3.5E-04	6.9E+00	2.1E-03
550	EPSCBSC52RATD	EPS 52/RATD (BREAKER) SPURIOUS CLOSE	3.0E-06	6.9E+00	1.8E-05
551	EPSCBSC52UATD	EPS 52/UATD (BREAKER) SPURIOUS CLOSE	3.0E-06	6.9E+00	1.8E-05
552	EPSCF4IVFFIBC-123	CLASS-1E UPS UNIT A,B,C FAIL TO OPERATE (CCF)	5.0E-07	6.0E+00	2.5E-06

Table 19.1-165 Basic Events (Hardware Failure, Human Error) RAW of POS 4-3 for LPSD PRA (Sheet 41 of 62)

Rank	Basic Event ID	Basic Event Description	Basic Event Probability	RAW	FV Importance
553	EPSCF4CBSO52UA-124	EPS 52/UAA,B,C(BREAKER) SPURIOUS OPEN (CCF)	2.9E-08	6.0E+00	1.5E-07
554	EPSCF4CBSO72AU-123	EPS 72/AUA,B,C (BREAKER) SPURIOUS OPEN (CCF)	2.9E-08	6.0E+00	1.5E-07
555	RSSCF4CVOD027-ALL	RHS-VLV-027A,B,C,D FAIL TO OPEN (CCF)	4.3E-07	5.8E+00	2.1E-06
556	RSSCF4CVOD028-ALL	RHS-VLV-028A,B,C,D FAIL TO OPEN (CCF)	4.3E-07	5.8E+00	2.1E-06
557	RSSCF4CVOD022-ALL	RHS-VLV-022A,B,C,D FAIL TO OPEN (CCF)	4.3E-07	5.8E+00	2.1E-06
558	EPSCBFO52UAT-AC	EPS 52/UATA,C (BREAKER) FAIL TO OPEN (CCF)	5.0E-06	5.2E+00	2.1E-05
559	EPSCBFO52RAT-AC	EPS 52/RATA,C (BREAKER) FAIL TO OPEN (CCF)	5.0E-06	5.2E+00	2.1E-05
560	EPSCF4CBSC52UAT-13	EPS 52/UATA,C (BREAKER) SPURIOUS CLOSE (CCF)	3.4E-08	5.2E+00	1.4E-07
561	EPSCF4CBSC52RAT-24	EPS 52/RATA,C (BREAKER) SPURIOUS CLOSE (CCF)	3.4E-08	5.2E+00	1.4E-07
562	EPSCF4DLLRGTG-23	CLASS-1E GTG B,C FAIL TO LOAD AND RUN AFTER FIRST HOUR OF OPERATION (CCF)	2.5E-04	5.1E+00	1.0E-03
563	EPSCF4DLADGTG-14	CLASS-1E GTG B,C FAIL TO START (CCF)	4.3E-05	5.1E+00	1.7E-04
564	EPSCF4DLSRGTG-23	CLASS-1E GTG B,C FAIL TO LOAD AND RUN DURING FIRST HOUR OF OPERATION (CCF)	4.0E-05	5.1E+00	1.6E-04
565	EPSCF4SEFFGTG-23	CLASS-1E GTG B,C SEQUENCER FAIL TO OPERATE (CCF)	2.5E-05	5.1E+00	1.0E-04
566	EPSCF4CBTD52EPS-23	EPS 52/EPSB,C (BREAKER) FAIL TO CLOSE (CCF)	5.0E-06	5.1E+00	2.0E-05

Table 19.1-165 Basic Events (Hardware Failure, Human Error) RAW of POS 4-3 for LPSD PRA (Sheet 42 of 62)

Rank	Basic Event ID	Basic Event Description	Basic Event Probability	RAW	FV Importance
567	EPSCBFO52UAT-BC	EPS 52/UATB,C (BREAKER) FAIL TO OPEN (CCF)	5.0E-06	5.1E+00	2.0E-05
568	EPSCF4CBSC52UAT-23	EPS 52/UATB,C (BREAKER) SPURIOUS CLOSE (CCF)	3.4E-08	5.1E+00	1.4E-07
569	EPSCF4CBSO52EPS-23	EPS 52/EPSB,C (BREAKER) SPURIOUS OPEN (CCF)	3.4E-08	5.1E+00	1.4E-07
570	RWSOO04XV051	(HE) MISALIGNMENT OF RWS-VLV-051 AFTER TEST OR MAINTENANCE	8.0E-04	5.0E+00	3.2E-03
571	RWSXVOD021	RWS-VLV-021 FAIL TO OPEN	7.0E-04	5.0E+00	2.8E-03
572	RWSXVOD052	RWS-VLV-052 FAIL TO OPEN	7.0E-04	5.0E+00	2.8E-03
573	RWSXVPR021	RWS-VLV-021 PLUG	2.4E-06	5.0E+00	9.5E-06
574	RWSXVPR051	RWS-VLV-051 PLUG	2.4E-06	5.0E+00	9.5E-06
575	RWSXVPR052	RWS-VLV-052 PLUG	2.4E-06	5.0E+00	9.5E-06
576	RWSXVEL051	RWS-VLV-051 EXTERNAL LEAK LARGE	7.2E-08	5.0E+00	2.9E-07
577	RWSXVEL052	RWS-VLV-052 EXTERNAL LEAK LARGE	7.2E-08	5.0E+00	2.9E-07
578	RWSPNELPIPE5	RWS PIPING BETWEEN RWS-VLV-021 AND RWSAT EXTERNAL LEAK LARGE	6.0E-10	5.0E+00	2.4E-09
579	RWSCF2PMAD001AB-ALL	RWS-MPP-001A,B (RWR PUMP) FAIL TO START (CCF)	7.1E-05	5.0E+00	2.8E-04
580	RWSILFF020	RWSAT WATER LEVEL SENSOR RWS-LT-020 FAIL TO OPERATE	3.4E-05	4.9E+00	1.3E-04

Table 19.1-165 Basic Events (Hardware Failure, Human Error) RAW of POS 4-3 for LPSD PRA (Sheet 43 of 62)

Rank	Basic Event ID	Basic Event Description	Basic Event Probability	RAW	FV Importance
581	RWSCF2PMSR001AB-ALL	RWS-MPP-001A,B (RWR PUMP) FAIL TO RUN DURING FIRST HOUR OF OPERATION (CCF)	1.9E-05	4.9E+00	7.4E-05
582	RWSCF2PMLR001AB-ALL	RWS-MPP-001A,B (RWR PUMP) FAIL TO RUN AFTER FIRST HOUR OF OPERATION (CCF)	6.5E-06	4.9E+00	2.5E-05
583	RWSXVPR001	RWS-VLV-001 PLUG	2.4E-06	4.8E+00	9.2E-06
584	RWSMVPR004	RWS-MOV-004 PLUG	2.4E-06	4.8E+00	9.2E-06
585	RWSMVPR002	RWS-MOV-002 PLUG	2.4E-06	4.8E+00	9.2E-06
586	RWSMVCM004	RWS-MOV-004 SPURIOUS CLOSE	9.6E-07	4.8E+00	3.7E-06
587	RWSMVCM002	RWS-MOV-002 SPURIOUS CLOSE	9.6E-07	4.8E+00	3.7E-06
588	RSSCF4PMBD001-123	RHS-MPP-001A,B,C (CS/RHR PUMP) FAIL TO RE-START (CCF)	8.3E-06	4.8E+00	3.1E-05
589	RSSCF4PMYR001-124	RHS-MPP-001A,B,C (CS/RHR PUMP) FAIL TO RUN (CCF)	5.0E-07	4.8E+00	1.9E-06
590	CWSCF4CVOD016-34	NCS-VLV-016C,D FAIL TO RE-OPEN (CCF)	1.0E-07	4.6E+00	3.6E-07
591	SWSCF4CVOD602-34	EWS-VLV-602C,D FAIL TO RE-OPEN (CCF)	1.0E-07	4.6E+00	3.6E-07
592	SWSCF4CVOD502-23	EWS-VLV-502C,D FAIL TO RE-OPEN (CCF)	1.0E-07	4.6E+00	3.6E-07
593	EPSTRFF001D	D-CLASS 1E 6.9KV-480V STATION SERVICE TRANSFORMER FAIL TO OPERATE	8.2E-06	4.4E+00	2.8E-05
594	EPSBSFFLCD	D-CLASS 1E LOAD CENTER FAILURE	5.8E-06	4.4E+00	2.0E-05

Table 19.1-165 Basic Events (Hardware Failure, Human Error) RAW of POS 4-3 for LPSD PRA (Sheet 44 of 62)

Rank	Basic Event ID	Basic Event Description	Basic Event Probability	RAW	FV Importance
595	EPSCBFO52RAT-BC	EPS 52/RATB,C (BREAKER) FAIL TO OPEN (CCF)	5.0E-06	4.4E+00	1.7E-05
596	EPSCF4CBSC52RAT-12	EPS 52/RATB,C (BREAKER) SPURIOUS CLOSE (CCF)	3.4E-08	4.4E+00	1.1E-07
597	EPSBSFFMCCD	D-CLASS 1E 480V MCC FAILURE	5.8E-06	4.4E+00	1.9E-05
598	RSSRXEL001A	RHS-MHX-001A (A-CS/RHR HX) SHELL EXTERNAL LEAK LARGE	9.6E-08	4.2E+00	3.1E-07
599	RSSRXEL001B	RHS-MHX-001B (B-CS/RHR HX) SHELL EXTERNAL LEAK LARGE	9.6E-08	4.2E+00	3.1E-07
600	EPSCBSO52STLD	EPS 52/STLD (BREAKER) SPURIOUS OPEN	3.0E-06	4.2E+00	9.6E-06
601	EPSCBSO52STHD	EPS 52/STHD (BREAKER) SPURIOUS OPEN	3.0E-06	4.2E+00	9.6E-06
602	EPSCBSO52LCD	EPS 52/LCD (BREAKER) SPURIOUS OPEN	3.0E-06	4.2E+00	9.6E-06
603	SWSCF4PMBD001-12	EWS-MPP-001A,B (EWS PUMP) FAIL TO RE-START (CCF)	7.1E-05	4.1E+00	2.2E-04
604	RSSCF4PMBD001-134	RHS-MPP-001A,C,D (CS/RHR PUMP) FAIL TO RE-START (CCF)	8.3E-06	4.1E+00	2.6E-05
605	RSSCF4PMYR001-234	RHS-MPP-001A,C,D (CS/RHR PUMP) FAIL TO RUN (CCF)	5.0E-07	4.1E+00	1.6E-06
606	CWSCF4PCBD001-12	NCS-MPP-001A,B (CCW PUMP) FAIL TO RE-START (CCF)	3.9E-05	4.1E+00	1.2E-04
607	ACWCVEL306A	NCS-VLV-306A EXTERNAL LEAK LARGE	4.8E-08	4.0E+00	1.4E-07
608	ACWMVEL316A	NCS-MOV-316A EXTERNAL LEAK LARGE	2.4E-08	4.0E+00	7.2E-08

Table 19.1-165 Basic Events (Hardware Failure, Human Error) RAW of POS 4-3 for LPSD PRA (Sheet 45 of 62)

Rank	Basic Event ID	Basic Event Description	Basic Event Probability	RAW	FV Importance
609	EPSCF4DLLRGTG-24	CLASS-1E GTG B,D FAIL TO LOAD AND RUN AFTER FIRST HOUR OF OPERATION (CCF)	2.5E-04	4.0E+00	7.5E-04
610	EPSCF4DLADGTG-12	CLASS-1E GTG B,D FAIL TO START (CCF)	4.3E-05	4.0E+00	1.3E-04
611	EPSCF4DLSRGTG-24	CLASS-1E GTG B,D FAIL TO LOAD AND RUN DURING FIRST HOUR OF OPERATION (CCF)	4.0E-05	4.0E+00	1.2E-04
612	EPSCF4SEFFGTG-24	CLASS-1E GTG B,D SEQUENCER FAIL TO OPERATE (CCF)	2.5E-05	4.0E+00	7.4E-05
613	EPSCF4CBTD52EPS-24	EPS 52/EPSB,D (BREAKER) FAIL TO CLOSE (CCF)	5.0E-06	4.0E+00	1.5E-05
614	EPSCF4CBSO52EPS-24	EPS 52/EPS B,D (BREAKER) SPURIOUS OPEN (CCF)	3.4E-08	4.0E+00	9.9E-08
615	SWSCF4MVOD503-12	EWS-MOV-503A,B FAIL TO OPEN (CCF)	8.3E-06	3.9E+00	2.4E-05
616	RSSCF2MVOD001AB-ALL	RHS-MOV-001A,B FAIL TO OPEN (CCF)	9.5E-05	3.7E+00	2.5E-04
617	RSSCF2MVOD021AB-ALL	RHS-MOV-021A,B FAIL TO OPEN (CCF)	9.5E-05	3.7E+00	2.5E-04
618	RSSCF2MVOD026AB-ALL	RHS-MOV-026A,B FAIL TO OPEN (CCF)	9.5E-05	3.7E+00	2.5E-04
619	RSSCF2MVOD002AB-ALL	RHS-MOV-002A,B FAIL TO OPEN (CCF)	9.5E-05	3.7E+00	2.5E-04
620	RSSCF2MVCD001AB-ALL	CSS-MOV-001A,B FAIL TO CLOSE (CCF)	7.7E-05	3.7E+00	2.0E-04
621	RSSCF2MVOD145AB-ALL	NCS-MOV-145A,B FAIL TO OPEN (CCF)	4.7E-05	3.6E+00	1.2E-04
622	RSSXVEL141A	NCS-VLV-141A EXTERNAL LEAK LARGE	7.2E-08	3.6E+00	1.8E-07

Table 19.1-165 Basic Events (Hardware Failure, Human Error) RAW of POS 4-3 for LPSD PRA (Sheet 46 of 62)

Rank	Basic Event ID	Basic Event Description	Basic Event Probability	RAW	FV Importance
623	RSSXVEL141B	NCS-VLV-141B EXTERNAL LEAK LARGE	7.2E-08	3.6E+00	1.8E-07
624	RSSXVEL144A	NCS-VLV-144A EXTERNAL LEAK LARGE	7.2E-08	3.6E+00	1.8E-07
625	RSSXVEL144B	NCS-VLV-144B EXTERNAL LEAK LARGE	7.2E-08	3.6E+00	1.8E-07
626	RSSXVEL125A	NCS-VLV-125A EXTERNAL LEAK LARGE	7.2E-08	3.6E+00	1.8E-07
627	RSSXVEL128B	NCS-VLV-128B EXTERNAL LEAK LARGE	7.2E-08	3.6E+00	1.8E-07
628	RSSXVEL131A	NCS-VLV-131A EXTERNAL LEAK LARGE	7.2E-08	3.6E+00	1.8E-07
629	RSSXVEL131B	NCS-VLV-131B EXTERNAL LEAK LARGE	7.2E-08	3.6E+00	1.8E-07
630	RSSXVEL125B	NCS-VLV-125B EXTERNAL LEAK LARGE	7.2E-08	3.6E+00	1.8E-07
631	RSSXVEL128A	NCS-VLV-128A EXTERNAL LEAK LARGE	7.2E-08	3.6E+00	1.8E-07
632	EPSCF4IVFFIBC-23	CLASS-1E UPS UNIT B,C FAIL TO OPERATE (CCF)	1.0E-06	3.5E+00	2.5E-06
633	EPSCF4CBSO52UA-12	EPS 52/UAB,C (BREAKER) SPURIOUS OPEN (CCF)	3.4E-08	3.5E+00	8.3E-08
634	EPSCF4CBSO72AU-23	EPS 72/AUB,C (BREAKER) SPURIOUS OPEN (CCF)	3.4E-08	3.5E+00	8.3E-08
635	RSSCF4PMBD001-13	RHS-MPP-001A,C (CS/RHR PUMP) FAIL TO RE-START (CCF)	1.7E-05	3.4E+00	4.0E-05
636	RSSCF4PMYR001-24	RHS-MPP-001A,C (CS/RHR PUMP) FAIL TO RUN (CCF)	1.0E-06	3.4E+00	2.4E-06

Table 19.1-165 Basic Events (Hardware Failure, Human Error) RAW of POS 4-3 for LPSD PRA (Sheet 47 of 62)

Rank	Basic Event ID	Basic Event Description	Basic Event Probability	RAW	FV Importance
637	EPSCF4CBSO72DB-234	EPS 72/DBA,C,D (BREAKER) SPURIOUS OPEN (CCF)	2.9E-08	3.4E+00	6.9E-08
638	EPSCF4CBSO72DB-134	EPS 72/DBA,B,D (BREAKER) SPURIOUS OPEN (CCF)	2.9E-08	3.4E+00	6.9E-08
639	EPSCF4BYFFBAT-134	A,B,D CLASS-1E BATTERY FAIL TO OPERATE (CCF)	1.2E-08	3.4E+00	2.9E-08
640	EPSCF4BYFFBAT-234	A,C,D CLASS-1E BATTERY FAIL TO OPERATE (CCF)	1.2E-08	3.4E+00	2.9E-08
641	SWSCF4CVOD602-13	EWS-VLV-602A,C FAIL TO RE-OPEN (CCF)	1.0E-07	3.4E+00	2.4E-07
642	CWSCF4CVOD016-13	NCS-VLV-016A,C FAIL TO RE-OPEN (CCF)	1.0E-07	3.4E+00	2.4E-07
643	SWSCF4CVOD502-24	EWS-VLV-502 A,C FAIL TO RE-OPEN (CCF)	1.0E-07	3.4E+00	2.4E-07
644	EPSCF4CBSO52STH-13	EPS 52/STHA,C (BREAKER) SPURIOUS OPEN (CCF)	3.4E-08	3.4E+00	7.9E-08
645	EPSCF4CBSO52STL-24	EPS 52/STLA,C (BREAKER) SPURIOUS OPEN (CCF)	3.4E-08	3.4E+00	7.9E-08
646	EPSCF4CBSO52LC-13	EPS 52/LCA,C (BREAKER) SPURIOUS OPEN (CCF)	3.4E-08	3.4E+00	7.9E-08
647	RSSCF4PMBD001-124	RHS-MPP-001A,B,D (CS/RHR PUMP) FAIL TO RE-START (CCF)	8.3E-06	3.2E+00	1.8E-05
648	RSSCF4PMYR001-134	RHS-MPP-001A,B,D (CS/RHR PUMP) FAIL TO RUN (CCF)	5.0E-07	3.2E+00	1.1E-06
649	CHIPMAD001B-R	CVS-MPP-001B (B-CHI PUMP) FAIL TO RE-START	1.5E-03	3.2E+00	3.3E-03
650	ACWMVCD316B	NCS-MOV-316B FAIL TO CLOSE	1.0E-03	3.2E+00	2.2E-03

Table 19.1-165 Basic Events (Hardware Failure, Human Error) RAW of POS 4-3 for LPSD PRA (Sheet 48 of 62)

Rank	Basic Event ID	Basic Event Description	Basic Event Probability	RAW	FV Importance
651	ACWMVOD325B	NCS-MOV-325B FAIL TO OPEN	1.0E-03	3.2E+00	2.2E-03
652	ACWMVOD324B	NCS-MOV-324B FAIL TO OPEN	1.0E-03	3.2E+00	2.2E-03
653	ACWMVOD321B	NCS-MOV-321B FAIL TO OPEN	1.0E-03	3.2E+00	2.2E-03
654	ACWMVOD322B	NCS-MOV-322B FAIL TO OPEN	1.0E-03	3.2E+00	2.2E-03
655	ACWCVCD306B	NCS-VLV-306B FAIL TO CLOSE	1.0E-04	3.2E+00	2.2E-04
656	ACWMVPR324B	NCS-MOV-324B PLUG	2.4E-06	3.2E+00	5.3E-06
657	ACWMVPR325B	NCS-MOV-325B PLUG	2.4E-06	3.2E+00	5.3E-06
658	ACWMVPR322B	NCS-MOV-322B PLUG	2.4E-06	3.2E+00	5.3E-06
659	ACWMVPR321B	NCS-MOV-321B PLUG	2.4E-06	3.2E+00	5.3E-06
660	ACWMVOM316B	NCS-MOV-316B SPURIOUS OPEN	9.6E-07	3.2E+00	2.1E-06
661	ACWMVCM325B	NCS-MOV-325B SPURIOUS CLOSE	9.6E-07	3.2E+00	2.1E-06
662	ACWMVCM324B	NCS-MOV-324B SPURIOUS CLOSE	9.6E-07	3.2E+00	2.1E-06
663	ACWMVCM321B	NCS-MOV-321B SPURIOUS CLOSE	9.6E-07	3.2E+00	2.1E-06
664	ACWMVCM322B	NCS-MOV-322B SPURIOUS CLOSE	9.6E-07	3.2E+00	2.1E-06

Table 19.1-165 Basic Events (Hardware Failure, Human Error) RAW of POS 4-3 for LPSD PRA (Sheet 49 of 62)

Rank	Basic Event ID	Basic Event Description	Basic Event Probability	RAW	FV Importance
665	ACWCVIL306B	NCS-VLV-306B INTERNAL LEAK LARGE	7.2E-07	3.2E+00	1.6E-06
666	ACWMVIL316B	NCS-MOV-316B INTERNAL LEAK LARGE	7.2E-08	3.2E+00	1.6E-07
667	ACWMVIL326B	NCS-MOV-326B INTERNAL LEAK LARGE	7.2E-08	3.2E+00	1.6E-07
668	ACWMVIL323B	NCS-MOV-323B INTERNAL LEAK LARGE	7.2E-08	3.2E+00	1.6E-07
669	CWSCF3IPFFHEAD-ALL	CCW SUPPLY HEADER PRESSURE SENSOR (TRAIN A,B,C) FAIL TO OPERATE CCF	6.8E-07	3.1E+00	1.5E-06
670	ACWOO02SC	(HE) FAIL TO ESTABLISH THE ALTERNATE CCWS BY FIRE PROTECTION WATER SUPPLY SYSTEM	2.2E-02	3.1E+00	4.8E-02
671	CWSCVOD306B	NCS-VLV-306B FAIL TO OPEN	1.1E-05	3.0E+00	2.3E-05
672	CWSCF2CVOD306AB-ALL	NCS-VLV-306A,B FAIL TO RE-OPEN (CCF)	5.6E-07	3.0E+00	1.1E-06
673	EPSCF4IVFFIBC-24	CLASS-1E UPS UNIT B,D FAIL TO OPERATE (CCF)	1.0E-06	3.0E+00	2.0E-06
674	EPSCF4CBSO72AU-24	EPS 72/AUB,D (BREAKER) SPURIOUS OPEN (CCF)	3.4E-08	3.0E+00	6.6E-08
675	EPSCF4CBSO52UA-13	EPS 52/UAB,D (BREAKER) SPURIOUS OPEN (CCF)	3.4E-08	3.0E+00	6.6E-08
676	EPSCF4CBSO52STL-23	EPS 52/STLC,D (BREAKER) SPURIOUS OPEN (CCF)	3.4E-08	2.9E+00	6.3E-08
677	EPSCF4CBSO52STH-34	EPS 52/STHC,D (BREAKER) SPURIOUS OPEN (CCF)	3.4E-08	2.9E+00	6.3E-08
678	EPSCF4CBSO52LC-34	EPS 52/LC C,D (BREAKER) SPURIOUS OPEN (CCF)	3.4E-08	2.9E+00	6.3E-08

Table 19.1-165 Basic Events (Hardware Failure, Human Error) RAW of POS 4-3 for LPSD PRA (Sheet 50 of 62)

Rank	Basic Event ID	Basic Event Description	Basic Event Probability	RAW	FV Importance
679	SWSSTPRST003D	EWS-SST-003D (STRAINER) PLUG	1.7E-04	2.7E+00	2.9E-04
680	CWSORPR043	NCS-FE-043 (ORIFICE) PLUG	2.4E-05	2.7E+00	4.2E-05
681	SWSORPR037	EWS-FE-037 (ORIFICE) PLUG	2.4E-05	2.7E+00	4.2E-05
682	SWSORPR001D	EWS-SRO-001D (ORIFICE) PLUG	2.4E-05	2.7E+00	4.2E-05
683	SWSPEELSWPD1	EWS D-EWS PUMP DISCHARGE LINE PIPING EXTERNAL LEAK LARGE	3.9E-06	2.7E+00	6.8E-06
684	SWSXVPR508D	EWS-VLV-508D PLUG	2.4E-06	2.7E+00	4.2E-06
685	SWSXVPR511D	EWS-VLV-511D PLUG	2.4E-06	2.7E+00	4.2E-06
686	SWSXVPR506D	EWS-VLV-506D PLUG	2.4E-06	2.7E+00	4.2E-06
687	CWSXVPR018D	NCS-VLV-018D PLUG	2.4E-06	2.7E+00	4.2E-06
688	CWSCVPR016D	NCS-VLV-016D PLUG	2.4E-06	2.7E+00	4.2E-06
689	CWSXVPR008D	NCS-VLV-008D PLUG	2.4E-06	2.7E+00	4.2E-06
690	CWSXVPR101D	NCS-VLV-101D PLUG	2.4E-06	2.7E+00	4.2E-06
691	SWSCVPR502D	EWS-VLV-502D PLUG	2.4E-06	2.7E+00	4.2E-06
692	SWSMVPR503D	EWS-MOV-503D PLUG	2.4E-06	2.7E+00	4.2E-06

Table 19.1-165 Basic Events (Hardware Failure, Human Error) RAW of POS 4-3 for LPSD PRA (Sheet 51 of 62)

Rank	Basic Event ID	Basic Event Description	Basic Event Probability	RAW	FV Importance
693	CWSXVPR104D	NCS-VLV-104D PLUG	2.4E-06	2.7E+00	4.2E-06
694	SWSXVPR514D	EWS-VLV-514D PLUG	2.4E-06	2.7E+00	4.2E-06
695	SWSXVPR520D	EWS-VLV-520D PLUG	2.4E-06	2.7E+00	4.2E-06
696	SWSXVPR517D	EWS-VLV-517D PLUG	2.4E-06	2.7E+00	4.2E-06
697	SWSMVCM503D	EWS-MOV-503D SPURIOUS CLOSE	9.6E-07	2.7E+00	1.7E-06
698	CWSRIEL001D2	NCS-MHX-001D (D-CCW HX) TUBE EXTERNAL LEAK LARGE	7.2E-07	2.7E+00	1.3E-06
699	SWSPEELSWSD3	EWS D-CCW HX COOLING LINE PIPING EXTERNAL LEAK LARGE	2.1E-07	2.7E+00	3.7E-07
700	SWSPMEL001D	EWS-MPP-001D (D-EWS PUMP) EXTERNAL LEAK LARGE	1.9E-07	2.7E+00	3.3E-07
701	SWSXVEL508D	EWS-VLV-508D EXTERNAL LEAK LARGE	7.2E-08	2.7E+00	1.3E-07
702	SWSXVEL514D	EWS-VLV-514D EXTERNAL LEAK LARGE	7.2E-08	2.7E+00	1.3E-07
703	SWSXVEL507D	EWS-VLV-507D EXTERNAL LEAK LARGE	7.2E-08	2.7E+00	1.3E-07
704	SWSXVEL509D	EWS-VLV-509D EXTERNAL LEAK LARGE	7.2E-08	2.7E+00	1.3E-07
705	SWSXVEL511D	EWS-VLV-511D EXTERNAL LEAK LARGE	7.2E-08	2.7E+00	1.3E-07
706	SWSXVEL506D	EWS-VLV-506D EXTERNAL LEAK LARGE	7.2E-08	2.7E+00	1.3E-07

Table 19.1-165 Basic Events (Hardware Failure, Human Error) RAW of POS 4-3 for LPSD PRA (Sheet 52 of 62)

Rank	Basic Event ID	Basic Event Description	Basic Event Probability	RAW	FV Importance
707	SWSCVEL502D	EWS-VLV-502D EXTERNAL LEAK LARGE	4.8E-08	2.7E+00	8.4E-08
708	SWSMVEL503D	EWS-MOV-503D EXTERNAL LEAK LARGE	2.4E-08	2.7E+00	4.2E-08
709	SWSPMYR001D-ABCD	EWS-MPP-001D (D-EWS PUMP) FAIL TO RUN	1.2E-04	2.7E+00	2.0E-04
710	SWSCF4CVOD502-34	EWS-VLV-502A,D FAIL TO RE-OPEN (CCF)	1.0E-07	2.7E+00	1.7E-07
711	CWSCF4CVOD016-14	NCS-VLV-016A,D FAIL TO RE-OPEN (CCF)	1.0E-07	2.7E+00	1.7E-07
712	SWSCF4CVOD602-14	EWS-VLV-602A,D FAIL TO RE-OPEN (CCF)	1.0E-07	2.7E+00	1.7E-07
713	CWSPCYR001D-ABCD	NCS-MPP-001D (D-CCW PUMP) FAIL TO RUN	6.7E-05	2.6E+00	1.1E-04
714	SWSSTPRST003A	EWS-SST-003A (STRAINER) PLUG	1.7E-04	2.6E+00	2.7E-04
715	SWSORPR001A	EWS-SRO-001A (ORIFICE) PLUG	2.4E-05	2.6E+00	3.9E-05
716	CWSORPR034	NCS-FE-034 (ORIFICE) PLUG	2.4E-05	2.6E+00	3.9E-05
717	CWSORPR040	NCS-FE-040 (ORIFICE) PLUG	2.4E-05	2.6E+00	3.9E-05
718	SWSORPR034	EWS-FE-034 (ORIFICE) PLUG	2.4E-05	2.6E+00	3.9E-05
719	SWSPEELSWPA1	EWS A-EWS PUMP DISCHARGE LINE PIPING EXTERNAL LEAK LARGE	3.9E-06	2.6E+00	6.3E-06
720	CWSXVPR104A	NCS-VLV-104A PLUG	2.4E-06	2.6E+00	3.9E-06

Table 19.1-165 Basic Events (Hardware Failure, Human Error) RAW of POS 4-3 for LPSD PRA (Sheet 53 of 62)

Rank	Basic Event ID	Basic Event Description	Basic Event Probability	RAW	FV Importance
721	SWSXVPR514A	EWS-VLV-514A PLUG	2.4E-06	2.6E+00	3.9E-06
722	SWSMVPR503A	EWS-MOV-503A PLUG	2.4E-06	2.6E+00	3.9E-06
723	CWSCVPR016A	NCS-VLV-016A PLUG	2.4E-06	2.6E+00	3.9E-06
724	SWSXVPR506A	EWS-VLV-506A PLUG	2.4E-06	2.6E+00	3.9E-06
725	CWSXVPR018A	NCS-VLV-018A PLUG	2.4E-06	2.6E+00	3.9E-06
726	SWSXVPR511A	EWS-VLV-511A PLUG	2.4E-06	2.6E+00	3.9E-06
727	SWSCVPR502A	EWS-VLV-502A PLUG	2.4E-06	2.6E+00	3.9E-06
728	SWSXVPR520A	EWS-VLV-520A PLUG	2.4E-06	2.6E+00	3.9E-06
729	CWSXVPR101A	NCS-VLV-101A PLUG	2.4E-06	2.6E+00	3.9E-06
730	SWSXVPR508A	EWS-VLV-508A PLUG	2.4E-06	2.6E+00	3.9E-06
731	CWSXVPR008A	NCS-VLV-008A PLUG	2.4E-06	2.6E+00	3.9E-06
732	SWSXVPR517A	EWS-VLV-517A PLUG	2.4E-06	2.6E+00	3.9E-06
733	SWSMVCM503A	EWS-MOV-503A SPURIOUS CLOSE	9.6E-07	2.6E+00	1.5E-06
734	CWSRIEL001A2	NCS-MHX-001A (A-CCW HX) TUBE EXTERNAL LEAK LARGE	7.2E-07	2.6E+00	1.2E-06

Table 19.1-165 Basic Events (Hardware Failure, Human Error) RAW of POS 4-3 for LPSD PRA (Sheet 54 of 62)

Rank	Basic Event ID	Basic Event Description	Basic Event Probability	RAW	FV Importance
735	SWSPEELSWSA3	EWS A-CCW HX COOLING LINE PIPING EXTERNAL LEAK LARGE	2.1E-07	2.6E+00	3.4E-07
736	SWSPMEL001A	EWS-MPP-001A (A-ESW PUMP) EXTERNAL LEAK LARGE	1.9E-07	2.6E+00	3.1E-07
737	SWSXVEL507A	EWS-VLV-507A EXTERNAL LEAK LARGE	7.2E-08	2.6E+00	1.2E-07
738	SWSXVEL509A	EWS-VLV-509A EXTERNAL LEAK LARGE	7.2E-08	2.6E+00	1.2E-07
739	SWSXVEL508A	EWS-VLV-508A EXTERNAL LEAK LARGE	7.2E-08	2.6E+00	1.2E-07
740	SWSXVEL506A	EWS-VLV-506A EXTERNAL LEAK LARGE	7.2E-08	2.6E+00	1.2E-07
741	SWSXVEL514A	EWS-VLV-514A EXTERNAL LEAK LARGE	7.2E-08	2.6E+00	1.2E-07
742	SWSXVEL511A	EWS-VLV-511A EXTERNAL LEAK LARGE	7.2E-08	2.6E+00	1.2E-07
743	SWSCVEL502A	EWS-VLV-502A EXTERNAL LEAK LARGE	4.8E-08	2.6E+00	7.7E-08
744	SWSMVEL503A	EWS-MOV-503A EXTERNAL LEAK LARGE	2.4E-08	2.6E+00	3.9E-08
745	RSSCF4PMBD001-234	RHS-MPP-001B,C,D (CS/RHR PUMP) FAIL TO RE-START (CCF)	8.3E-06	2.6E+00	1.3E-05
746	RSSCF4PMYR001-123	RHS-MPP-001B,C,D (CS/RHR PUMP) FAIL TO RUN (CCF)	5.0E-07	2.6E+00	8.0E-07
747	CHIOO02P+RWS-DP3	(HE) FAIL TO START STANDBY CHARGING PUMP AND REFILL RWSAT WATER FROM RWSP	1.6E-01	2.6E+00	3.0E-01
748	SWSORPR002D	EWS-SRO-002D (ORIFICE) PLUG	2.4E-05	2.5E+00	3.7E-05

Table 19.1-165 Basic Events (Hardware Failure, Human Error) RAW of POS 4-3 for LPSD PRA (Sheet 55 of 62)

Rank	Basic Event ID	Basic Event Description	Basic Event Probability	RAW	FV Importance
749	SWSFMPR073	EWS-FT-073 (FLOW METER) PLUG	2.4E-05	2.5E+00	3.7E-05
750	SWSXVPR601D	EWS-VLV-601D PLUG	2.4E-06	2.5E+00	3.7E-06
751	SWSCVPR602D	EWS-VLV-602D PLUG	2.4E-06	2.5E+00	3.7E-06
752	SWSPEELSWSD2	EWS D-EWS PUMP COOLING LINE PIPING EXTERNAL LEAK LARGE	3.8E-07	2.5E+00	5.8E-07
753	SWSXVEL601D	EWS-VLV-601D EXTERNAL LEAK LARGE	7.2E-08	2.5E+00	1.1E-07
754	SWSCVEL602D	EWS-VLV-602D EXTERNAL LEAK LARGE	4.8E-08	2.5E+00	7.4E-08
755	EPSCF4DLLRGTG-14	CLASS-1E GTG A,D FAIL TO LOAD AND RUN AFTER FIRST HOUR OF OPERATION (CCF)	2.5E-04	2.5E+00	3.9E-04
756	EPSCF4DLADGTG-23	CLASS-1E GTG A,D FAIL TO START (CCF)	4.3E-05	2.5E+00	6.5E-05
757	EPSCF4DLSRGTG-14	CLASS-1E GTG A,D FAIL TO LOAD AND RUN DURING FIRST HOUR OF OPERATION (CCF)	4.0E-05	2.5E+00	6.1E-05
758	EPSCF4SEFFGTG-14	CLASS-1E GTG A,D SEQUENCER FAIL TO OPERATE (CCF)	2.5E-05	2.5E+00	3.8E-05
759	EPSCF4CBTD52EPS-14	EPS 52/EPSA, D (BREAKER) FAIL TO CLOSE (CCF)	5.0E-06	2.5E+00	7.5E-06
760	EPSCF4CBSO52EPS-14	EPS 52/EPSA, D (BREAKER) SPURIOUS OPEN (CCF)	3.4E-08	2.5E+00	5.1E-08
761	RSSCF4PMBD001-23	RHS-MPP-001B,C (CS/RHR PUMP) FAIL TO RE-START (CCF)	1.7E-05	2.5E+00	2.5E-05
762	RSSCF4PMYR001-12	RHS-MPP-001B,C (CS/RHR PUMP) FAIL TO RUN (CCF)	1.0E-06	2.5E+00	1.5E-06

Table 19.1-165 Basic Events (Hardware Failure, Human Error) RAW of POS 4-3 for LPSD PRA (Sheet 56 of 62)

Rank	Basic Event ID	Basic Event Description	Basic Event Probability	RAW	FV Importance
763	SWSPMYR001A-ABCD	EWS-MPP-001A (A-EWS PUMP) FAIL TO RUN	1.2E-04	2.5E+00	1.7E-04
764	RSSCF4PMBD001-14	RHS-MPP-001A,D (CS/RHR PUMP) FAIL TO RE-START (CCF)	1.7E-05	2.4E+00	2.4E-05
765	RSSCF4PMYR001-34	RHS-MPP-001A,D (CS/RHR PUMP) FAIL TO RUN (CCF)	1.0E-06	2.4E+00	1.4E-06
766	SWSCF4PMBD001-23	EWS-MPP-001B,C (EWS PUMP) FAIL TO RE-START (CCF)	7.1E-05	2.4E+00	1.0E-04
767	SWSORPR002A	EWS-SRO-002A (ORIFICE) PLUG	2.4E-05	2.4E+00	3.4E-05
768	SWSFMPR070	EWS-FT-070 (FLOW METER) PLUG	2.4E-05	2.4E+00	3.4E-05
769	SWSXVPR601A	EWS-VLV-601A PLUG	2.4E-06	2.4E+00	3.4E-06
770	SWSCVPR602A	EWS-VLV-602A PLUG	2.4E-06	2.4E+00	3.4E-06
771	SWSPEELSWSA2	EWS A-EWS PUMP COOLING LINE PIPING EXTERNAL LEAK LARGE	3.8E-07	2.4E+00	5.3E-07
772	SWSXVEL601A	EWS-VLV-601A EXTERNAL LEAK LARGE	7.2E-08	2.4E+00	1.0E-07
773	SWSCVEL602A	EWS-VLV-602A EXTERNAL LEAK LARGE	4.8E-08	2.4E+00	6.8E-08
774	CWSPCYR001A-ABCD	NCS-MPP-001A (A-CCW PUMP) FAIL TO RUN	6.7E-05	2.4E+00	9.5E-05
775	RSSCF4PMBD001-12	RHS-MPP-001A,B (CS/RHR PUMP) FAIL TO RE-START (CCF)	1.7E-05	2.4E+00	2.4E-05
776	RSSCF4PMYR001-14	RHS-MPP-001A,B (CS/RHR PUMP) FAIL TO RUN (CCF)	1.0E-06	2.4E+00	1.4E-06

Table 19.1-165 Basic Events (Hardware Failure, Human Error) RAW of POS 4-3 for LPSD PRA (Sheet 57 of 62)

Rank	Basic Event ID	Basic Event Description	Basic Event Probability	RAW	FV Importance
777	CWSCF4PCBD001-23	NCS-MPP-001B,C (CCW PUMP) FAIL TO RE-START (CCF)	3.9E-05	2.4E+00	5.4E-05
778	EPSCBFO52UAT-AB	EPS 52/UATA,B (BREAKER) FAIL TO OPEN (CCF)	5.0E-06	2.3E+00	6.5E-06
779	EPSCBFO52RAT-AB	EPS 52/RATA,B (BREAKER) FAIL TO OPEN (CCF)	5.0E-06	2.3E+00	6.5E-06
780	EPSCF4CBSC52RAT-14	EPS 52/RATA,B (BREAKER) SPURIOUS CLOSE (CCF)	3.4E-08	2.3E+00	4.4E-08
781	EPSCF4CBSC52UAT-12	EPS 52/UATA,B (BREAKER) SPURIOUS CLOSE (CCF)	3.4E-08	2.3E+00	4.4E-08
782	OPSLOOP_LPSD24	LOSS OF OFFSITE POWER EVENT AFTER INITIATING EVENT OCCURS	5.4E-04	2.2E+00	6.6E-04
783	SWSCF4MVOD503-23	EWS-MOV-503B,C FAIL TO OPEN (CCF)	8.3E-06	2.2E+00	1.0E-05
784	EPSCF4DLLRGTG-34	CLASS-1E GTG C, D FAIL TO LOAD AND RUN AFTER FIRST HOUR OF OPERATION (CCF)	2.5E-04	2.2E+00	3.0E-04
785	EPSCF4DLADGTG-24	CLASS-1E GTG C,D FAIL TO START (CCF)	4.3E-05	2.2E+00	5.0E-05
786	EPSCF4DLSRGTG-34	CLASS-1E GTG C, D FAIL TO LOAD AND RUN DURING FIRST HOUR OF OPERATION (CCF)	4.0E-05	2.2E+00	4.7E-05
787	EPSCF4SEFFGTG-34	CLASS-1E GTG C, D SEQUENCER FAIL TO OPERATE (CCF)	2.5E-05	2.2E+00	2.9E-05
788	EPSCF4CBTD52EPS-34	EPS 52/EPSC, D (BREAKER) FAIL TO CLOSE (CCF)	5.0E-06	2.2E+00	5.8E-06
789	EPSCF4CBSO52EPS-34	EPS 52/EPSC, D (BREAKER) SPURIOUS OPEN (CCF)	3.4E-08	2.2E+00	3.9E-08
790	SGNBTSWCCF2	GROUP-2 APPLICATION SOFTWARE CCF	1.0E-04	2.1E+00	1.1E-04

Table 19.1-165 Basic Events (Hardware Failure, Human Error) RAW of POS 4-3 for LPSD PRA (Sheet 58 of 62)

Rank	Basic Event ID	Basic Event Description	Basic Event Probability	RAW	FV Importance
791	RCSILFFRCS012	RCS WATER LEVEL SENSOR (MIDDLE) RCS-LT-012 FAIL TO OPERATE	3.4E-05	2.1E+00	3.8E-05
792	RSSCF2PMBD001AB-ALL	RHS-MPP-001A,B (CS/RHR PUMP) FAIL TO RE-START (CCF)	9.4E-05	2.1E+00	1.0E-04
793	SWSCF4PMBD001-24	EWS-MPP-001B,D (EWS PUMP) FAIL TO RE-START (CCF)	7.1E-05	2.1E+00	7.9E-05
794	RSSCF2PMYR001AB-ALL	RHS-MPP-001A,B (CS/RHR PUMP) FAIL TO RUN (CCF)	5.6E-06	2.1E+00	6.3E-06
795	RSSCF2RHPR001AB-ALL	RHS-MHX-001A,B (CS/RHR HX) PLUG / FOUL (CCF)	5.6E-06	2.1E+00	6.2E-06
796	RSSCF2CVOD022AB-ALL	RHS-VLV-022A,B FAIL TO OPEN (CCF)	1.2E-06	2.1E+00	1.4E-06
797	RSSCF2CVOD004AB-ALL	RHS-VLV-004A,B FAIL TO OPEN (CCF)	1.2E-06	2.1E+00	1.4E-06
798	RSSCF2CVOD028AB-ALL	RHS-VLV-028A,B FAIL TO OPEN (CCF)	1.2E-06	2.1E+00	1.4E-06
799	RSSCF2CVOD027AB-ALL	RHS-VLV-027A,B FAIL TO OPEN (CCF)	1.2E-06	2.1E+00	1.4E-06
800	EPSCF4CBSO52STH-12	EPS 52/STHA,B (BREAKER) SPURIOUS OPEN (CCF)	3.4E-08	2.1E+00	3.6E-08
801	EPSCF4CBSO52LC-12	EPS 52/LCA,B (BREAKER) SPURIOUS OPEN (CCF)	3.4E-08	2.1E+00	3.6E-08
802	EPSCF4CBSO52STL-14	EPS 52/STLA,B (BREAKER) SPURIOUS OPEN (CCF)	3.4E-08	2.1E+00	3.6E-08
803	CWSCF4PCBD001-24	NCS-MPP-001B,D (CCW PUMP) FAIL TO RE-START (CCF)	3.9E-05	2.1E+00	4.1E-05
804	LOAOO02OD	(HE) FAIL TO ISOLATE LOW-PRESSURE LETDOWN LINE	3.8E-03	2.0E+00	4.0E-03

Table 19.1-165 Basic Events (Hardware Failure, Human Error) RAW of POS 4-3 for LPSD PRA (Sheet 59 of 62)

Rank	Basic Event ID	Basic Event Description	Basic Event Probability	RAW	FV Importance
805	SWSSTPRST003C	EWS-SST-003C (STRAINER) PLUG	1.7E-04	2.0E+00	1.8E-04
806	SWSORPR036	EWS-FE-036 (ORIFICE) PLUG	2.4E-05	2.0E+00	2.5E-05
807	CWSORPR042	NCS-FE-042 (ORIFICE) PLUG	2.4E-05	2.0E+00	2.5E-05
808	SWSORPR001C	EWS-SRO-001C (ORIFICE) PLUG	2.4E-05	2.0E+00	2.5E-05
809	SWSPEELSWPC1	EWS C-EWS PUMP DISCHARGE LINE PIPING EXTERNAL LEAK LARGE	3.9E-06	2.0E+00	4.1E-06
810	SWSXVPR514C	EWS-VLV-514C PLUG	2.4E-06	2.0E+00	2.5E-06
811	CWSXVPR008C	NCS-VLV-008C PLUG	2.4E-06	2.0E+00	2.5E-06
812	SWSXVPR517C	EWS-VLV-517C PLUG	2.4E-06	2.0E+00	2.5E-06
813	SWSCVPR502C	EWS-VLV-502C PLUG	2.4E-06	2.0E+00	2.5E-06
814	SWSXVPR520C	EWS-VLV-520C PLUG	2.4E-06	2.0E+00	2.5E-06
815	CWSXVPR018C	NCS-VLV-018C PLUG	2.4E-06	2.0E+00	2.5E-06
816	SWSXVPR508C	EWS-VLV-508C PLUG	2.4E-06	2.0E+00	2.5E-06
817	SWSXVPR506C	EWS-VLV-506C PLUG	2.4E-06	2.0E+00	2.5E-06
818	SWSMVPR503C	EWS-MOV-503C PLUG	2.4E-06	2.0E+00	2.5E-06

Table 19.1-165 Basic Events (Hardware Failure, Human Error) RAW of POS 4-3 for LPSD PRA (Sheet 60 of 62)

Rank	Basic Event ID	Basic Event Description	Basic Event Probability	RAW	FV Importance
819	CWSXVPR101C	NCS-VLV-101C PLUG	2.4E-06	2.0E+00	2.5E-06
820	CWSXVPR104C	NCS-VLV-104C PLUG	2.4E-06	2.0E+00	2.5E-06
821	SWSXVPR511C	EWS-VLV-511C PLUG	2.4E-06	2.0E+00	2.5E-06
822	CWSCVPR016C	NCS-VLV-016C PLUG	2.4E-06	2.0E+00	2.5E-06
823	SWSMVCM503C	EWS-MOV-503C SPURIOUS CLOSE	9.6E-07	2.0E+00	1.0E-06
824	CWSRIEL001C2	NCS-MHX-001C (C-CCW HX) TUBE EXTERNAL LEAK LARGE	7.2E-07	2.0E+00	7.5E-07
825	SWSPEELSWSC3	EWS C-CCW HX COOLING LINE PIPING EXTERNAL LEAK LARGE	2.1E-07	2.0E+00	2.2E-07
826	SWSPMEL001C	EWS-MPP-001C (C-ESW PUMP) EXTERNAL LEAK LARGE	1.9E-07	2.0E+00	2.0E-07
827	SWSXVEL506C	EWS-VLV-506C EXTERNAL LEAK LARGE	7.2E-08	2.0E+00	7.5E-08
828	SWSXVEL507C	EWS-VLV-507C EXTERNAL LEAK LARGE	7.2E-08	2.0E+00	7.5E-08
829	SWSXVEL508C	EWS-VLV-508C EXTERNAL LEAK LARGE	7.2E-08	2.0E+00	7.5E-08
830	SWSXVEL511C	EWS-VLV-511C EXTERNAL LEAK LARGE	7.2E-08	2.0E+00	7.5E-08
831	SWSXVEL514C	EWS-VLV-514C EXTERNAL LEAK LARGE	7.2E-08	2.0E+00	7.5E-08
832	SWSXVEL509C	EWS-VLV-509C EXTERNAL LEAK LARGE	7.2E-08	2.0E+00	7.5E-08

Table 19.1-165 Basic Events (Hardware Failure, Human Error) RAW of POS 4-3 for LPSD PRA (Sheet 61 of 62)

Rank	Basic Event ID	Basic Event Description	Basic Event Probability	RAW	FV Importance
833	SWSCVEL502C	EWS-VLV-502C EXTERNAL LEAK LARGE	4.8E-08	2.0E+00	5.0E-08
834	SWSMVEL503C	EWS-MOV-503C EXTERNAL LEAK LARGE	2.4E-08	2.0E+00	2.5E-08
835	CWSRHPF001A1-ABCD	NCS-MHX-001A (A-CCW HX) PLUG / FOUL	1.4E-06	2.0E+00	1.4E-06
836	RSSAVPR023	RHS-HCV-023 PLUG	2.4E-06	2.1E+00	2.6E-06
837	RSSCVPR022B	RHS-VLV-022B PLUG	2.4E-06	2.1E+00	2.6E-06
838	RSSCVPR028B	RHS-VLV-028B PLUG	2.4E-06	2.1E+00	2.6E-06
839	RSSMVCM021B	RHS-MOV-021B SPURIOUS CLOSE	9.6E-07	2.1E+00	1.0E-06
840	RSSMVOM025B	RHS-MOV-025B SPURIOUS OPEN	9.6E-07	2.1E+00	1.0E-06
841	RSSMVCM026B	RHS-MOV-026B SPURIOUS CLOSE	9.6E-07	2.1E+00	1.0E-06
842	SWSPMBD001A-ABC	EWS-MPP-001A (A-EWS PUMP) FAIL TO RE-START	1.8E-03	2.0E+00	1.9E-03
843	CWSPCBD001A-ABC	NCS-MPP-001A (A-CCW PUMP) FAIL TO RE-START	9.8E-04	2.0E+00	1.0E-03
844	SWSMVOD503A-ABC	EWS-MOV-503A FAIL TO OPEN	9.5E-04	2.0E+00	1.0E-03
845	RSSCF3CVOD004ABC-12	RHS-VLV-004A,B FAIL TO OPEN (CCF)	4.6E-07	2.0E+00	4.7E-07
846	RSSCF3CVOD027ABC-12	RHS-VLV-027A,B FAIL TO OPEN (CCF)	4.6E-07	2.0E+00	4.7E-07

Table 19.1-165 Basic Events (Hardware Failure, Human Error) RAW of POS 4-3 for LPSD PRA (Sheet 62 of 62)

Rank	Basic Event ID	Basic Event Description	Basic Event Probability	RAW	FV Importance
847	RSSCF3CVOD028ABC-12	RHS-VLV-028A,B FAIL TO OPEN (CCF)	4.6E-07	2.0E+00	4.7E-07
848	RSSCF3CVOD022ABC-13	RHS-VLV-022A,B FAIL TO OPEN (CCF)	4.6E-07	2.0E+00	4.7E-07
849	RSSCF3RHPR001ABC-13	RHS-MHX-001A,B (CS/RHR HX) PLUG / FOUL (CCF)	2.4E-07	2.0E+00	2.4E-07

Table 19.1-166 Common Cause Failure FV Importance of POS 4-3 for LPSD PRA

Rank	Basic Event ID	Basic Event Description	Basic Event Probability	FV Importance	RAW
1	EPSCF4DLLRGTG-ALL	CLASS-1E GTG A,B,C, D FAIL TO LOAD AND RUN AFTER FIRST HOUR OF OPERATION (CCF)	9.9E-04	1.0E-01	1.1E+02
2	SGNBTSWCCF3	NON-SAFETY (PSMS) APPLICATION SOFTWARE CCF	1.0E-05	5.3E-02	5.3E+03
3	EPSCF4DLADGTG-ALL	CLASS-1E GTG A,B,C,D FAIL TO START (CCF)	2.1E-04	2.2E-02	1.1E+02
4	SWSCF4PMBD001-ALL	EWS-MPP-001A,B,C,D (EWS PUMP) FAIL TO RE-START (CCF)	4.8E-05	2.1E-02	4.3E+02
5	EPSCF4DLSRGTG-ALL	CLASS-1E GTG A,B FAIL TO LOAD AND RUN DURING FIRST HOUR OF OPERATION (CCF)	1.6E-04	1.7E-02	1.1E+02
6	CWSCF4PCBD001-ALL	NCS-MPP-001A,B,C,D (CCW PUMP) FAIL TO RE-START (CCF)	2.6E-05	1.1E-02	4.3E+02
7	EPSCF2DLLRAAC-ALL	AAC A,B FAIL TO RUN AFTER FIRST HOUR OF OPERATION (CCF)	1.5E-03	9.8E-03	7.7E+00
8	SGNBTSWCCF1	GROUP-1 APPLICATION SOFTWARE CCF	1.0E-04	6.4E-03	6.5E+01
9	SWSCF4MVOD503-ALL	EWS-MOV-503A,B,C,D FAIL TO OPEN (CCF)	1.3E-05	5.4E-03	4.3E+02
10	HPICF2PMAD001BD-ALL	SIS-MPP-001B,D (SI PUMP) FAIL TO START (CCF)	1.5E-04	4.5E-03	3.1E+01

Table 19.1-167 Common Cause Failure RAW of POS 4-3 for LPSD PRA

Rank	Basic Event ID	Basic Event Description	Basic Event Probability	RAW	FV Importance
1	RTPBTSWCCF	BASIC SOFTWARE CCF	1.0E-07	2.5E+04	2.5E-03
2	EPSCF4CBSO52STH-ALL	EPS 52/STHA,B,C,D (BREAKER) SPURIOUS OPEN (CCF)	1.6E-07	1.4E+04	2.1E-03
3	EPSCF4CBSO52STL-ALL	EPS 52/STLA,B,C,D (BREAKER) SPURIOUS OPEN (CCF)	1.6E-07	1.4E+04	2.1E-03
4	EPSCF4CBSO52LC-ALL	EPS 52/LCA,B,C,D (BREAKER) SPURIOUS OPEN (CCF)	1.6E-07	1.4E+04	2.1E-03
5	SWSCF4PMYR001-ALL	EWS-MPP-001A,B,C,D (EWS PUMP) FAIL TO RUN (CCF)	1.2E-07	1.4E+04	1.6E-03
6	CWSCF4PCYR001-ALL	NCS-MPP-001A,B,C,D (CCW PUMP) FAIL TO RUN (CCF)	6.7E-08	1.4E+04	9.1E-04
7	CWSCF4RHPF001-ALL	NCS-MHX-001A,B,C.D (CCW HX) PLUG / FOUL(CCF)	1.8E-08	1.4E+04	2.4E-04
8	SGNBTSWCCF3	NON-SAFETY (PSMS) APPLICATION SOFTWARE CCF	1.0E-05	5.3E+03	5.3E-02
9	EPSCF4CBSC52RAT-ALL	EPS 52/RATA,B,C,D (BREAKER) SPURIOUS CLOSE (CCF)	1.6E-07	4.2E+03	6.6E-04
10	EPSCF4CBSC52UAT-ALL	EPS 52/UATA,B,C,D (BREAKER) SPURIOUS CLOSE (CCF)	1.6E-07	4.2E+03	6.6E-04

Table 19.1-168 Human Error FV Importance of POS 4-3 for LPSD PRA

Rank	Basic Event ID	Basic Event Description	Basic Event Probability	FV Importance	RAW
1	HPIOO02S-DP2	(HE) FAIL TO START STANDBY SAFETY INJECTION PUMP	5.5E-02	5.0E-01	9.6E+00
2	RSSOO02P	(HE) FAIL TO RE-START THE RHR PUMPS WHEN THE LOOP EVENT OCCURS	2.6E-03	3.3E-01	1.3E+02
3	CHIOO02P+RWS-DP3	(HE) FAIL TO START STANDBY CHARGING PUMP AND REFILL RWSAT WATER FROM RWSP	1.6E-01	3.0E-01	2.6E+00
4	CHIOO02RWS-DP3	(HE) FAIL TO REFILL RWSAT WATER FROM RWSP	1.6E-01	1.8E-01	2.0E+00
5	HPIOO02S	(HE) FAIL TO START STANDBY SAFETY INJECTION PUMP	4.9E-03	1.6E-01	3.4E+01
6	EPSOO02RDG	(HE) FAIL TO CONNECT THE ALTERNATE AC POWER SOURCE TO CLASS 1E BUS	2.1E-02	1.4E-01	7.6E+00
7	RSSOO02LINE+P	(HE) FAIL TO ESTABLISH RHR INJECTION LINE AND START STANBY PUMP	3.8E-03	1.1E-01	3.0E+01
8	LOAOO02LC	(HE) FAIL TO ISOLATE THE LEAKAGE TRAIN OF RHR SYSTEM	2.6E-03	7.4E-02	3.0E+01
9	CHIOO02RWS-DP2	(HE) FAIL TO REFILL RWSAT WATER FROM RWSP	6.7E-02	5.3E-02	1.7E+00
10	ACWOO02SC	(HE) FAIL TO ESTABLISH THE ALTERNATE CCWS BY FIRE PROTECTION WATER SUPPLY SYSTEM	2.2E-02	4.8E-02	3.1E+00

Table 19.1-169 Human Error RAW of POS 4-3 for LPSD PRA

Rank	Basic Event ID	Basic Event Description	Basic Event Probability	RAW	FV Importance
1	RSSOO02P	(HE) FAIL TO RE-START THE RHR PUMPS WHEN THE LOOP EVENT OCCURS	2.6E-03	1.3E+02	3.3E-01
2	HPIOO02S	(HE) FAIL TO START STANDBY SAFETY INJECTION PUMP	4.9E-03	3.4E+01	1.6E-01
3	LOAOO02LC	(HE) FAIL TO ISOLATE THE LEAKAGE TRAIN OF RHR SYSTEM	2.6E-03	3.0E+01	7.4E-02
4	RSSOO02LINE+P	(HE) FAIL TO ESTABLISH RHR INJECTION LINE AND START STANBY PUMP	3.8E-03	3.0E+01	1.1E-01
5	HPIOO02S-DP2	(HE) FAIL TO START STANDBY SAFETY INJECTION PUMP	5.5E-02	9.6E+00	5.0E-01
6	EPSOO02RDG	(HE) FAIL TO CONNECT THE ALTERNATE AC POWER SOURCE TO CLASS 1E BUS	2.1E-02	7.6E+00	1.4E-01
7	RWSOO04XV051	(HE) MISALIGNMENT OF RWS-VLV-051 AFTER TEST OR MAINTENANCE	8.0E-04	5.0E+00	3.2E-03
8	ACWOO02SC	(HE) FAIL TO ESTABLISH THE ALTERNATE CCWS BY FIRE PROTECTION WATER SUPPLY SYSTEM	2.2E-02	3.1E+00	4.8E-02
9	CHIOO02P+RWS-DP3	(HE) FAIL TO START STANDBY CHARGING PUMP AND REFILL RWSAT WATER FROM RWSP	1.6E-01	2.6E+00	3.0E-01
10	LOAOO02OD	(HE) FAIL TO ISOLATE LOW-PRESSURE LETDOWN LINE	3.8E-03	2.0E+00	4.0E-03

Table 19.1-170 Hardware Single Failure FV Importance of POS 4-3 for LPSD PRA

Rank	Basic Event ID	Basic Event Description	Basic Event Probability	FV Importance	RAW
1	CVCAVCD024C	RHS-AOV-024C FAIL TO CLOSE	1.2E-03	4.9E-02	4.2E+01
2	CVCAVCD024B	RHS-AOV-024B FAIL TO CLOSE	1.2E-03	4.9E-02	4.2E+01
3	EPSDLLRAACB	B-AAC FAIL TO LOAD AND RUN AFTER FIRST HOUR OF OPERATION	1.8E-02	9.9E-03	1.5E+00
4	EPSDLLREGTGD-ABCD	D-CLASS 1E GTG FAIL TO LOAD AND RUN AFTER FIRST HOUR OF OPERATION	1.7E-02	6.0E-03	1.4E+00
5	EPSDLLREGTGB-ABCD	B-CLASS 1E GTG FAIL TO LOAD AND RUN AFTER FIRST HOUR OF OPERATION	1.7E-02	5.8E-03	1.3E+00
6	EPSDLLREGTGC-ABCD	C-CLASS 1E GTG FAIL TO LOAD AND RUN AFTER FIRST HOUR OF OPERATION	1.7E-02	4.6E-03	1.3E+00
7	EPSDLLRAACA	A-AAC FAIL TO LOAD AND RUN AFTER FIRST HOUR OF OPERATION	1.8E-02	4.0E-03	1.2E+00
8	CHIPMAD001B-R	CVS-MPP-001B (B-CHI PUMP) FAIL TO RE-START	1.5E-03	3.3E-03	3.2E+00
9	RWSXVOD021	RWS-VLV-021 FAIL TO OPEN	7.0E-04	2.8E-03	5.0E+00
10	RWSXVOD052	RWS-VLV-052 FAIL TO OPEN	7.0E-04	2.8E-03	5.0E+00

Table 19.1-171 Hardware Single Failure RAW of POS 4-3 for LPSD PRA

Rank	Basic Event ID	Basic Event Description	Basic Event Probability	RAW	FV Importance
1	RWSXVEL024	RWS-VLV-024 EXTERNAL LEAK LARGE	7.2E-08	2.4E+02	1.7E-05
2	RWSTNEL001	RWS-MCP-001 (RWSP) EXTERNAL LEAK LARGE	4.8E-08	2.4E+02	1.1E-05
3	RWSCVEL023	RWS-VLV-023 EXTERNAL LEAK LARGE	4.8E-08	2.4E+02	1.1E-05
4	RWSPNELPIPE1	RWS PIPING BETWEEN RWSP AND RWS-VLV-023 EXTERNAL LEAK LARGE	6.0E-10	2.4E+02	1.4E-07
5	RWSXVEL001	RWS-VLV-001 EXTERNAL LEAK LARGE	7.2E-08	2.4E+02	1.7E-05
6	RSSPNEL01B	CSS PIPING BETWEEN RWSP AND CSS-MOV-001B EXTERNAL LEAK LARGE	2.9E-08	2.3E+02	6.6E-06
7	RSSPNEL01D	CSS PIPING BETWEEN RWSP AND CSS-MOV-001D EXTERNAL LEAK LARGE	2.9E-08	2.3E+02	6.6E-06
8	RSSPNEL01C	CSS PIPING BETWEEN RWSP AND CSS-MOV-001C EXTERNAL LEAK LARGE	2.8E-08	2.3E+02	6.6E-06
9	RSSPNEL01A	CSS PIPING BETWEEN RWSP AND CSS-MOV-001A EXTERNAL LEAK LARGE	2.8E-08	2.3E+02	6.6E-06
10	HPIPNELSUCTSB	SIS B-SI PUMP SUCTION LINE (INSIDE C/V) PIPING EXTERNAL LEAK LARGE	2.8E-08	2.3E+02	6.5E-06

Table 19.1-172 Definition of Release Categories

Release Category	Description
RC1	Containment bypass which includes both core damage after steam generator tube rupture (SGTR) and temperature induced SGTR after core damage
RC2	Containment isolation failure
RC3	Containment overpressure failure before core damage due to loss of heat removal
RC4	Early containment failure due to dynamic loads which includes hydrogen combustion before or just after reactor vessel failure, in-vessel and ex-vessel steam explosion, rocket-mode reactor vessel failure, and direct containment heating
RC5	Late containment failure which includes containment overpressure failure after core damage, hydrogen combustion long after reactor vessel failure, and basemat melt through
RC6	Intact containment in which fission products are released at design leak rate

Table 19.1-173 Summary of Frequency of Release Categories

Release Category	Frequency (/RY)	Contribution to Total CDF
RC1 (Containment Bypass)	1.7E-08	1.6%
RC2 (Containment Isolation Failure)	3.4E-09	0.3%
RC3 (Containment Failure before Core Damage)	2.2E-08	2.1%
RC4 (Early Containment Failure)	1.8E-08	1.8%
RC5 (Late Containment Failure)	4.7E-08	4.5%
RC6 (Intact Containment)	9.2E-07	89.7%
Total CDF	1.0E-06	100.0%

Table 19.1-174 Summary of Release Fractions

	RC1	RC2	RC3	RC4	RC5	RC6
Noble Gas	9.48E-01	9.98E-01	9.87E-01	1.00E+00	9.94E-01	2.87E-03
CsI	2.90E-01	3.06E-01	4.80E-01	7.08E-02	4.49E-03	1.69E-06
TeO_2	1.38E-01	5.00E-02	4.45E-01	5.04E-02	7.25E-05	1.35E-06
SrO	8.79E-03	7.93E-03	4.45E-02	6.15E-03	1.28E-04	1.76E-07
MoO_2	2.27E-02	1.61E-02	2.76E-01	2.66E-02	1.06E-04	6.39E-07
CsOH	2.06E-01	4.69E-02	4.65E-01	4.78E-02	2.51E-03	1.66E-06
BaO	1.53E-02	1.12E-02	1.05E-01	2.39E-02	1.27E-04	2.71E-07
La_2O_3	2.98E-03	4.14E-03	1.57E-03	1.37E-04	2.02E-05	3.60E-09
CeO_2	4.05E-03	5.15E-03	1.21E-02	1.58E-03	2.56E-05	1.06E-08
Sb	1.07E-01	2.16E-01	3.56E-01	1.16E-01	2.96E-02	1.11E-06
Te_2	5.16E-04	7.24E-04	8.68E-04	5.54E-03	9.71E-08	9.44E-13
UO_2	2.33E-08	2.96E-07	1.05E-06	4.31E-06	8.12E-15	2.20E-18

Table 19.1-175 Summary of Frequency of Release Categories for Fire

Release Category	Frequency (/RY)	Contribution to Total CDF
RC1 (Containment Bypass)	2.7E-08	3.2%
RC2 (Containment Isolation Failure)	6.2E-09	0.7%
RC3 (Containment Failure before Core Damage)	9.2E-08	10.7%
RC4 (Early Containment Failure)	3.6E-08	4.1%
RC5 (Late Containment Failure)	2.5E-08	2.9%
RC6 (Intact Containment)	6.7E-07	78.3%
Total CDF	8.6E-07	100.0%

Table 19.1-176 Correspondence between Accident Sequence and Internal Fire Events Release Categories

Release Category	Similar Accident Sequence
RC1 (Containment Bypass)	Accident Sequence for Flood
RC2 (Containment Isolation Failure)	Accident Sequence for Internal Events
RC3 (Containment Failure before Core Damage)	Accident Sequence for Internal Events
RC4 (Early Containment Failure)	Accident Sequence for Flood
RC5 (Late Containment Failure)	Accident Sequence for Internal Events
RC6 (Intact Containment)	Accident Sequence for Flood

Table 19.1-177 Summary of Frequency of Release Categories for Flood

Release Category	Frequency (/RY)	Contribution to Total CDF
RC1 (Containment Bypass)	4.0E-09	0.5%
RC2 (Containment Isolation Failure)	4.0E-09	0.5%
RC3 (Containment Failure before Core Damage)	1.0E-07	11.2%
RC4 (Early Containment Failure)	1.6E-08	1.8%
RC5 (Late Containment Failure)	3.2E-08	3.6%
RC6 (Intact Containment)	7.4E-07	82.5%
Total CDF	8.9E-07	100.0%

Table 19.1-178 Summary of Release Fractions for Flood

	RC1	RC2	RC3	RC4	RC5	RC6
Noble Gas	1.66E-01	9.87E-01	1.00E+00	9.97E-01	9.90E-01	2.15E-03
CsI	5.25E-03	5.88E-03	3.63E-01	1.01E-02	5.04E-03	2.57E-06
TeO_2	2.89E-03	2.59E-03	3.21E-01	5.98E-03	8.10E-05	3.85E-06
SrO	1.01E-04	1.47E-03	2.99E-02	2.57E-02	5.94E-05	3.90E-08
MoO_2	4.65E-03	1.70E-03	1.52E-01	1.00E-02	1.21E-04	1.80E-06
CsOH	1.10E-03	3.69E-03	3.22E-01	5.05E-03	1.89E-03	2.18E-06
BaO	2.73E-03	1.54E-03	6.19E-02	2.10E-02	1.08E-04	3.22E-07
La_2O_3	1.96E-05	1.46E-03	9.93E-04	2.58E-02	2.57E-06	8.67E-10
CeO_2	6.34E-05	1.46E-03	2.62E-03	2.58E-02	3.13E-06	2.94E-09
Sb	3.00E-02	2.99E-03	2.53E-01	2.69E-02	5.20E-03	1.92E-06
Te_2	0.00E+00	1.98E-05	1.10E-03	2.98E-04	0.00E+00	0.00E+00
UO_2	0.00E+00	3.76E-13	9.56E-07	2.61E-12	0.00E+00	0.00E+00

Table 19.1-179 Summary of Release Fractions for LPSD

	Filled RCS State (POS3)	Mid-loop Operation State (POS4)
Noble Gas	1.00E+00	9.46E-01
CsI	9.63E-04	3.89E-02
TeO_2	1.78E-05	3.14E-02
SrO	4.75E-08	1.11E-02
MoO_2	1.48E-07	9.02E-03
CsOH	4.06E-04	3.35E-02
BaO	1.31E-06	1.20E-02
La_2O_3	2.18E-09	1.81E-03
CeO_2	4.82E-09	2.88E-03
Sb	2.27E-02	4.78E-02
Te_2	2.17E-03	7.31E-04
UO_2	3.17E-08	2.78E-06

Table 19.1-180 Room Temperature Analysis Results for Each Area

Area	Temporary Fan	Door	Initial Temperature [F]Note	Results and Remarks
GTG Room	-	-	-	GTG has independent HVAC system from essential chilled water system
T/D EFW Pump Room	Not installed	Close	105	Not exceed the design limit
SI Pump Room	Not installed	Close	105	Not exceed the design limit
CS/RHR Pump Room	Not installed	Close	105	Not exceed the design limit
Class 1E Electrical Area Room	Not installed	Close	95	Exceed the design limit temperature and operator actions such as installation of a temporary fan and opening door are effective not to exceed the design limit temperature
	Installed	Open		Not exceed the design limit
Class 1E I&C Room	Not installed	Close	79	Not exceed the design limit
Class 1E battery Room	Not installed	Close	77	Not exceed the design limit
Main Control Room	Not installed	Close	78	Possibility to exceed the design limit Operators can also perform similar actions from RSC

Note

Initial temperature is maximum during normal condition listed in DCD Table 9.4-1.

Table 19.1-181 Key Sources of Uncertainty and Key Assumptions (LPSD Operation) (Sheet 1 of 6)

Key Sources of Uncertainty and Key Assumptions		Type (Note)	Summary Results of Assessment	Quantitative Approach
Unique Equipments and their Duty to the US-APWR Design	Gas Turbine Generators	M	Sensitivity analyse of failure probability, failure rates and CCF parameters were performed.	Sensitivity Analysis (Case 1-1, 1-2)
	Digital I&C	M	Sensitivity analyses of various failure probabilities of application and basic software CCF for digital I&C were performed.	Sensitivity Analysis (Case 6-1, 6-2)
Initiating Event Analysis	Initiating event frequency of loss of RHR caused by other failures (LORH) and loss of CCW/essential service water (LOCS)	M	Initiating event frequency of loss of RHR caused by other failures and loss of CCW/essential service water depends on equipment outage. Sensitivity analysis assuming no planned maintenance was performed.	Sensitivity Analysis (Case 3-1)
	Statistic uncertainty of initiating event frequency	P	(Statistical uncertainty is considered.)	Uncertainty Analysis
	Completeness of initiating events to the US-APWR design	C	Rare initiating events to the US-APWR design are assessed.	NA
	Outage types and their frequencies	M	Since human errors are the most dominant contributor to internal event risk during LPSD operation, the sources have less impact on the risk in comparison with the human errors. Sensitivity analysis assuming different outage types and their frequencies from the base case was performed.	Sensitivity Analysis (Case 3-2)
	Duration of plant shutdown	M	Sensitivity analysis using different duration from the base case was performed.	Sensitivity Analysis (Case 5-1)

Table 19.1-181 Key Sources of Uncertainty and Key Assumptions (LPSD Operation) (Sheet 2 of 6)

Key Sources of Uncertainty and Key Assumptions		Type (Note)	Summary Results of Assessment	Quantitative Approach
Event Tree Analysis	Indication of accident sequences	M	Realistic accident sequences are considered.	NA
System Analysis	Plugging before events occurred is not modelled	M	It would be hard to plug during LPSD operation in RCS and safety-related systems.	NA
	Class 1E electrical room HVAC are reliable and do not impact risk	M	Even if losses of HVAC occurs, automatic signals to start Class 1E GTGs or AAC, and to actuate low pressure letdown line isolation will actually complete prior to occurrence of RCS boiling of an initiating event. To relax room heat up after losses of Class 1E electrical room HVAC, the operator will be open the room door and utilize available temporary fans.	NA
	Equipment outage	M	Since human errors are the most dominant contributor to internal event risk during LPSD operation, the sources have less impact on the risk in comparison with the human errors. Sensitivity analysis assuming different outage types and their frequencies from the base case was performed.	Sensitivity Analysis (Case 3-1)

Table 19.1-181 Key Sources of Uncertainty and Key Assumptions (LPSD Operation) (Sheet 3 of 6)

Key Sources of Uncertainty and Key Assumptions		Type (Note)	Summary Results of Assessment	Quantitative Approach
Data Analysis	Applicability of failure modes to the US-APWR equipment design	M	Potentially valuable generic data sources were collected. All the failure modes of the US-APWR component types were considered.	NA
	Failure probability and failure rates for diesel generators are applied to gas turbine generators	M	Sensitivity analysis failure probability and failure rates was performed.	Sensitivity Analysis (Case 1-1)
	Statistical uncertainty of failure rate	P	(Statistical uncertainty is considerable.)	Uncertainty Analysis
	Failure probability of digital I&C system	M	Sensitivity analyses of various failure probabilities of application software CCF for I&C were performed.	Sensitivity Analysis (Case 6-1, 6-2)
	Reliability of components	M	There is no plant-specific reliability data for the US-APWR. In the design stage, it is probable that the reliability of components of a newly designed plant is comparable to the component reliability of operating US plants. Therefore, US generic data is applicable.	NA

Table 19.1-181 Key Sources of Uncertainty and Key Assumptions (LPSD Operation) (Sheet 4 of 6)

Key Sources of Uncertainty and Key Assumptions		Type (Note)	Summary Results of Assessment	Quantitative Approach
Common Cause Failure Analysis	CCF parameters of emergency diesel generators are applied to gas turbine generators	M	Sensitivity analysis for the gas turbine generator CCF parameters was performed.	Sensitivity Analysis (Case 1-2)
	Statistical uncertainty of CCF probabilities	P	(Statistical uncertainty is considerable.)	Uncertainty Analysis
	CCF for continually operating pumps	M	There is data published for CCF of continually operating pumps. Based on engineering judgment, the PRA applies a CCF parameter lower than those reported in the NUREGs for the CCW and ESW pumps. Uncertainty associated with the CCF parameters for continually running pumps impact the initiating event frequency for loss of CCW, which has large contribution to the CDF. The PRA treats CCF for continually running pumps and standby pumps alike and applies a value of 0.1. This value is deemed a conservative estimation since the running pumps and the standby pumps are initially in an asymmetric configuration.	NA

Table 19.1-181 Key Sources of Uncertainty and Key Assumptions (LPSD Operation) (Sheet 5 of 6)

Key Sources of Uncertainty and Key Assumptions		Type (Note)	Summary Results of Assessment	Quantitative Approach
Human Reliability Analysis	Human error probability	M	Sensitivity analyses of post initiating event operator action failure probabilities were performed to study the impact of human errors to CDF, assuming the HEP to 0.0, lower value, mean value or upper value.	Sensitivity Analysis (Case 4-1, 4-2, 4-3)
	Statistical uncertainty of human error probability	P	(Statistical uncertainty is considered).	NA
	Visual display unit (VDU) interaction	M	Sensitivity analysis was performed assuming that changing windows on the display is not effective to reduce dependencies between actions and cannot be perceived as action performed in different locations.	Sensitivity Analysis (Case 4-6)
	Frequent training of operator actions	M	Sensitivity analysis assuming that operators perform less frequent training was carried out.	Sensitivity Analysis (Case 4-2)
	Dependency among operator actions	M	Sensitivity analyses assuming various dependency level among operator actions were performed.	Sensitivity Analysis (Case 4-4, 4-5, 4-6)

Table 19.1-181 Key Sources of Uncertainty and Key Assumptions (LPSD Operation) (Sheet 6 of 6)

Key Sources of Uncertainty and Key Assumptions		Type (Note)	Summary Results of Assessment	Quantitative Approach
Shutdown Condition	Outage types and their frequencies	M	Sensitivity analysis assuming different outage types and frequencies were performed.	Sensitivity Analysis (Case 3-2)
	RCS vent path for draindown	M	Sensitivity analysis, assuming that the pressurizer manway is used as the RCS vent path for draindown before refueling, was performed.	Sensitivity Analysis (Case 3-3)
	RCS makeup function	M	Sensitivity analyses, assuming that three or four (all) SI pumps are unavailable (Two SI pumps are unavailable in the base case in accordance with LTOP requirements), were performed.	Sensitivity Analysis (Case 3-4)
	Duration of plant shutdown	M	Sensitivity analysis using duration based on Japanese operating experience was performed.	Sensitivity Analysis (Case 5-1)
	Containment penetrations	M	During shutdown operation, containment penetrations (equipment hatch and personnel hatch) may be open. Containment closure contributes to reduction of large release risk. Operator action to close the penetrations and the necessary SSCs for closure are important.	N/A
Note - Uncertainty sources are categorized into three types, Parametric (P), Modeling (M) or Completeness (C).				

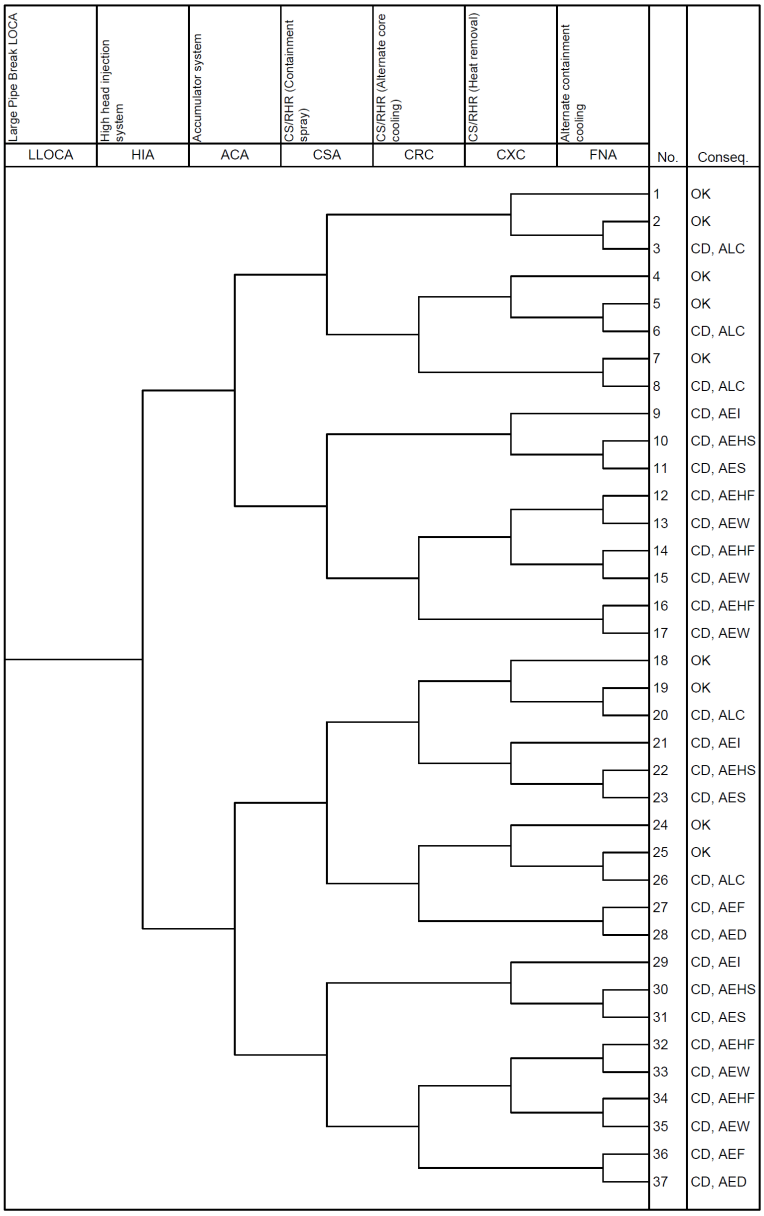

Figure 19.1-1 Event Tree (Sheet 1 of 19) (Large LOCA)

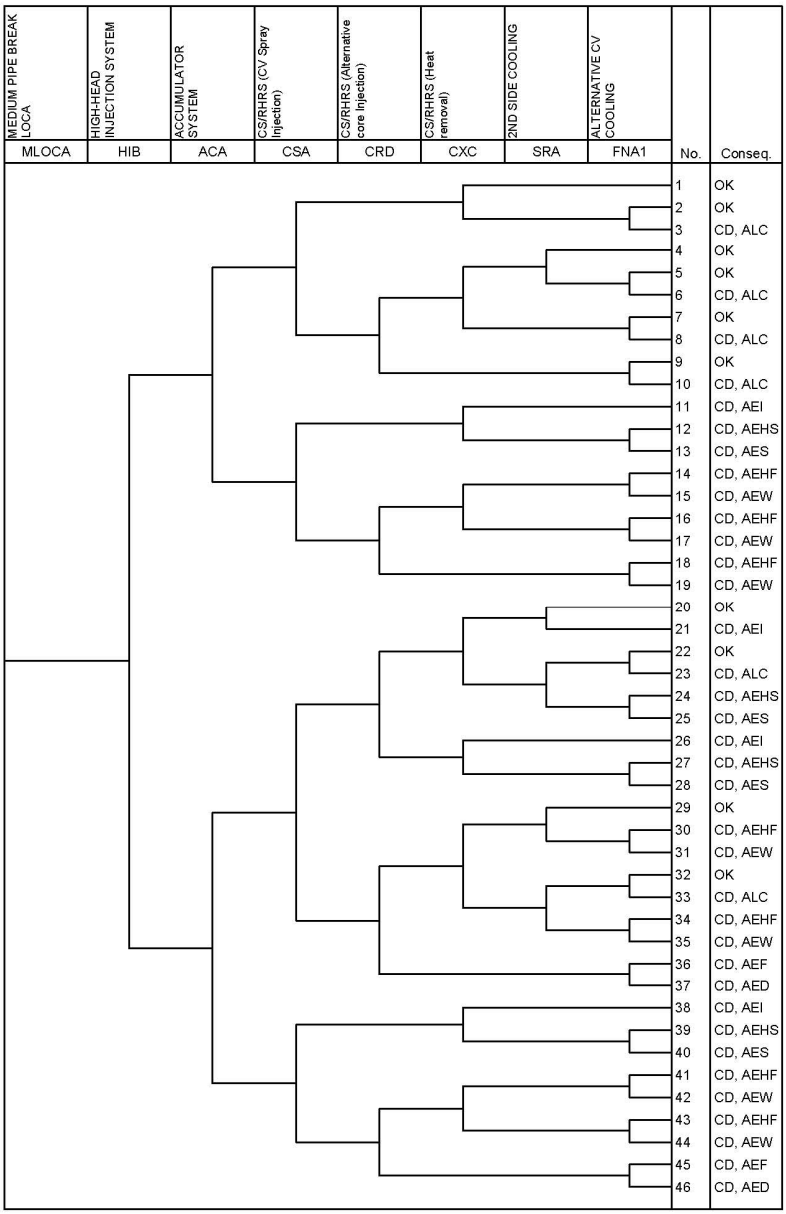

Figure 19.1-1 Event Tree (Sheet 2 of 19) (Medium LOCA)

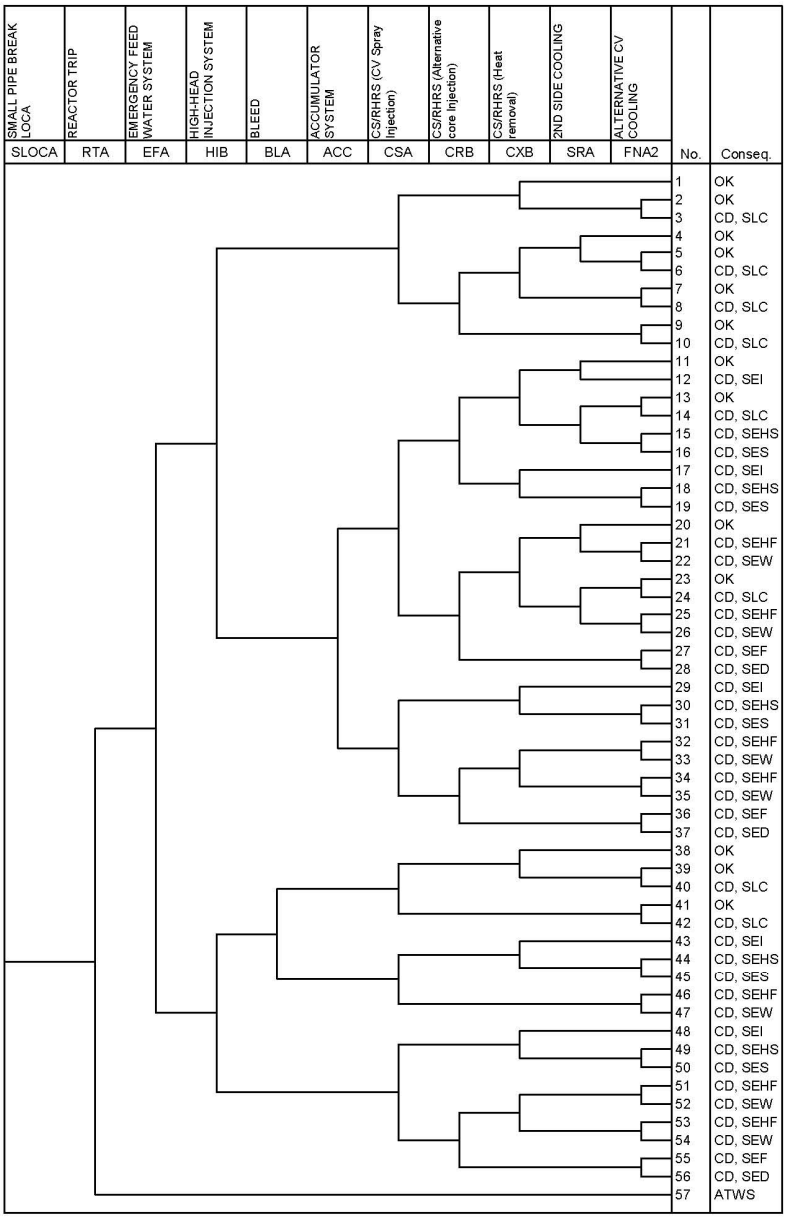

Figure 19.1-1 Event Tree (Sheet 3 of 19) (Small LOCA)

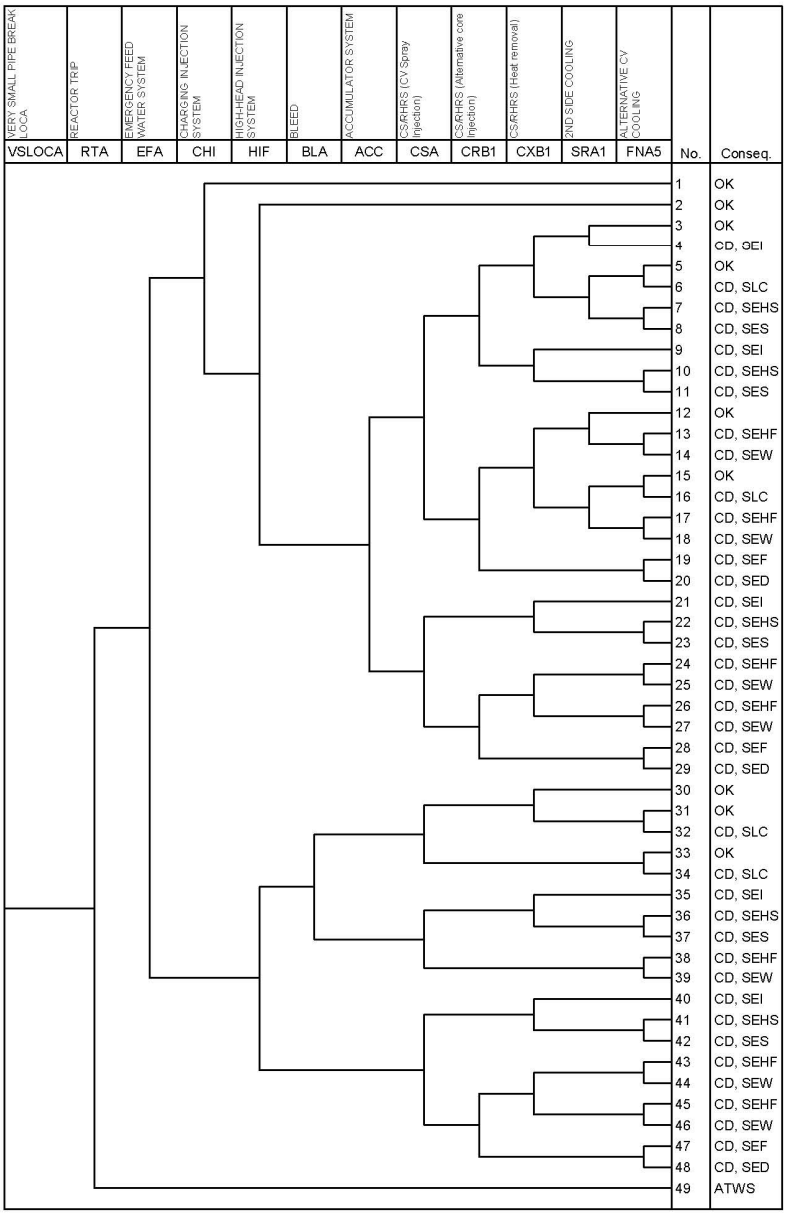

Figure 19.1-1 Event Tree (Sheet 4 of 19) (Very Small LOCA)

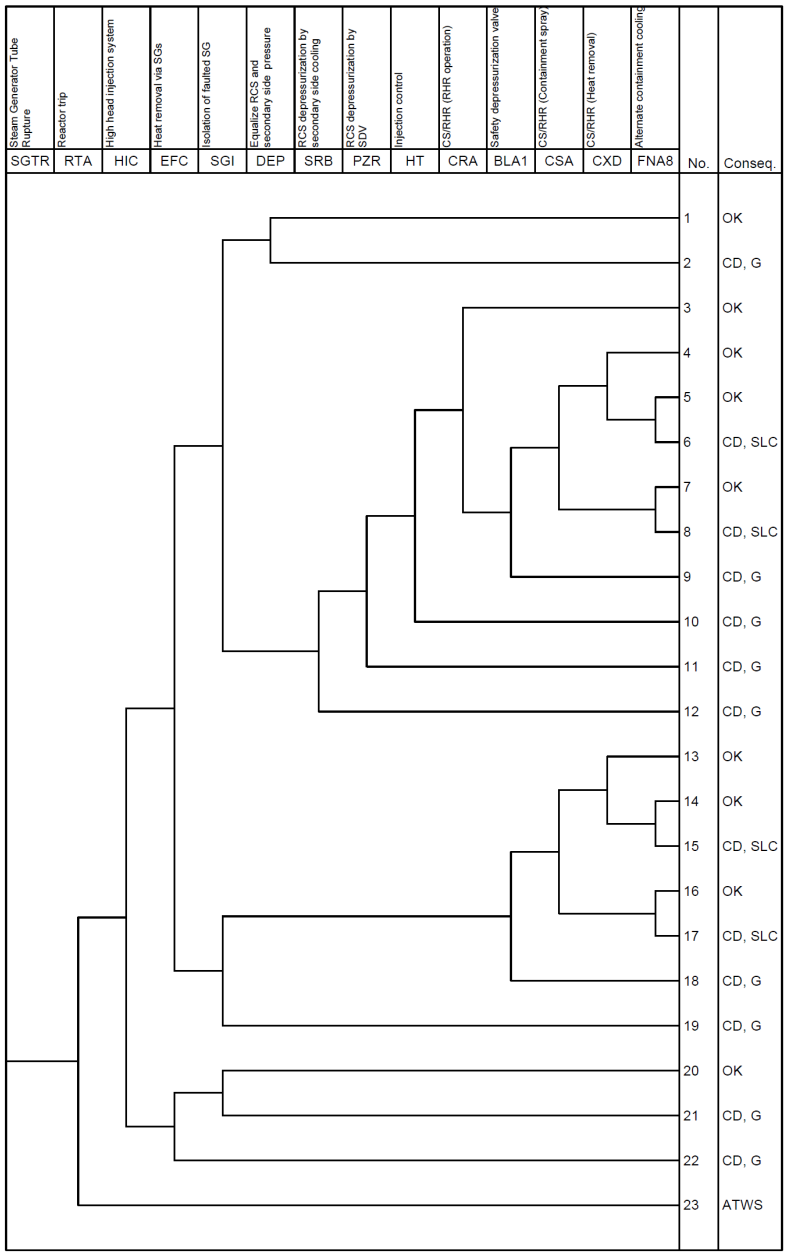

Figure 19.1-1 Event Tree (Sheet 5 of 19) (SGTR)

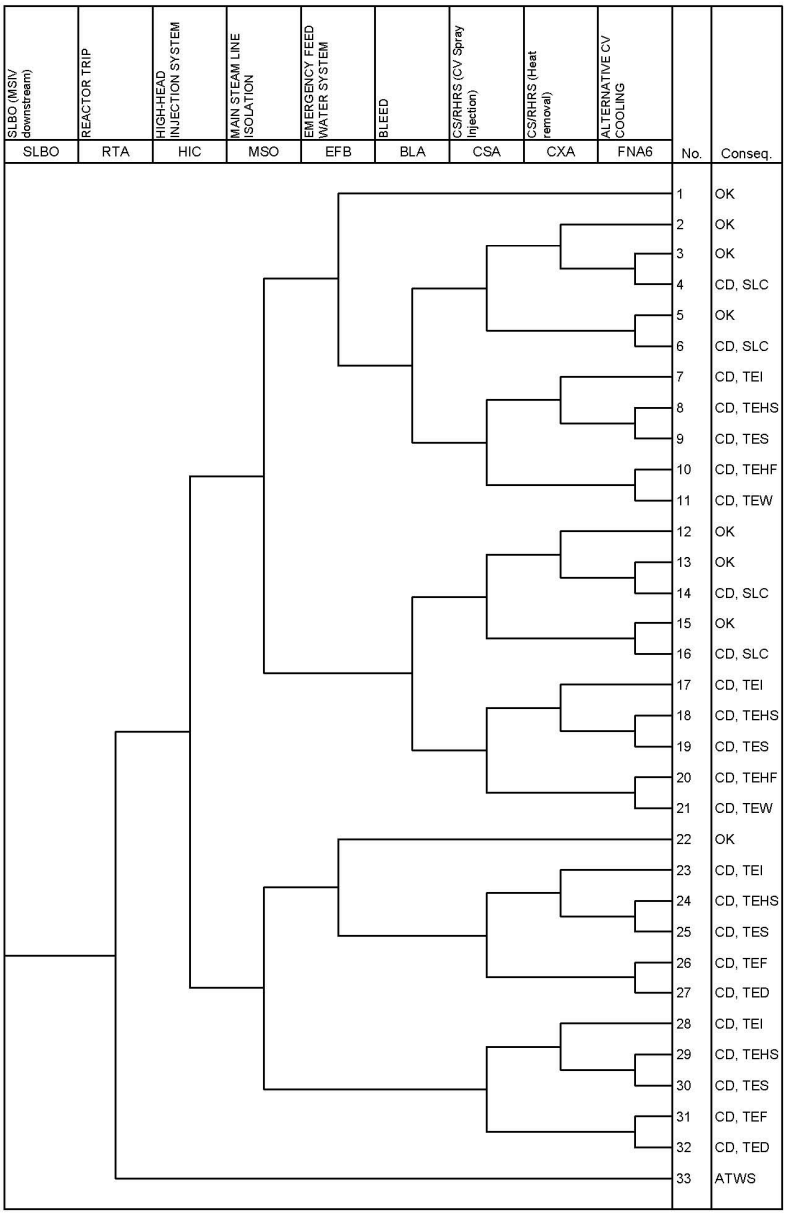

Figure 19.1-1 Event Tree (Sheet 6 of 19) (Steam Line Break Downstream MSIV)

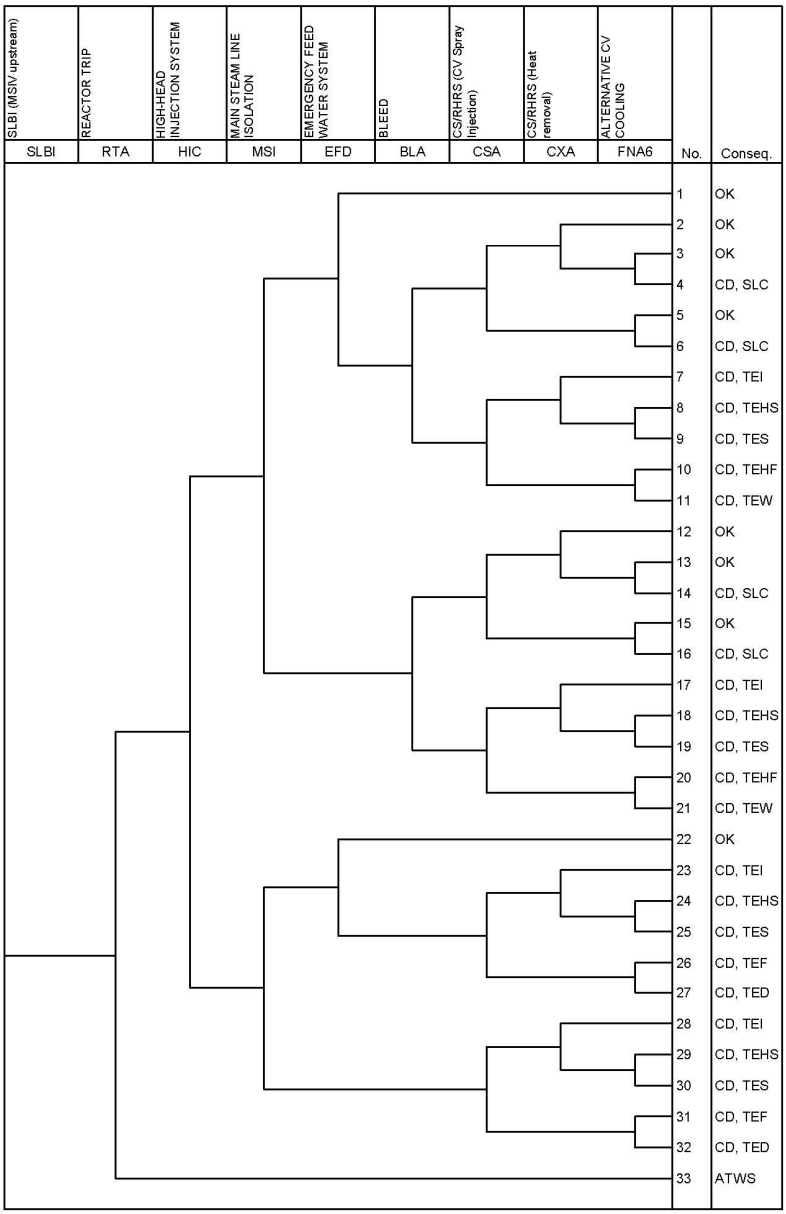

Figure 19.1-1 Event Tree (Sheet 7 of 19) (Steam Line Break Upstream MSIV)

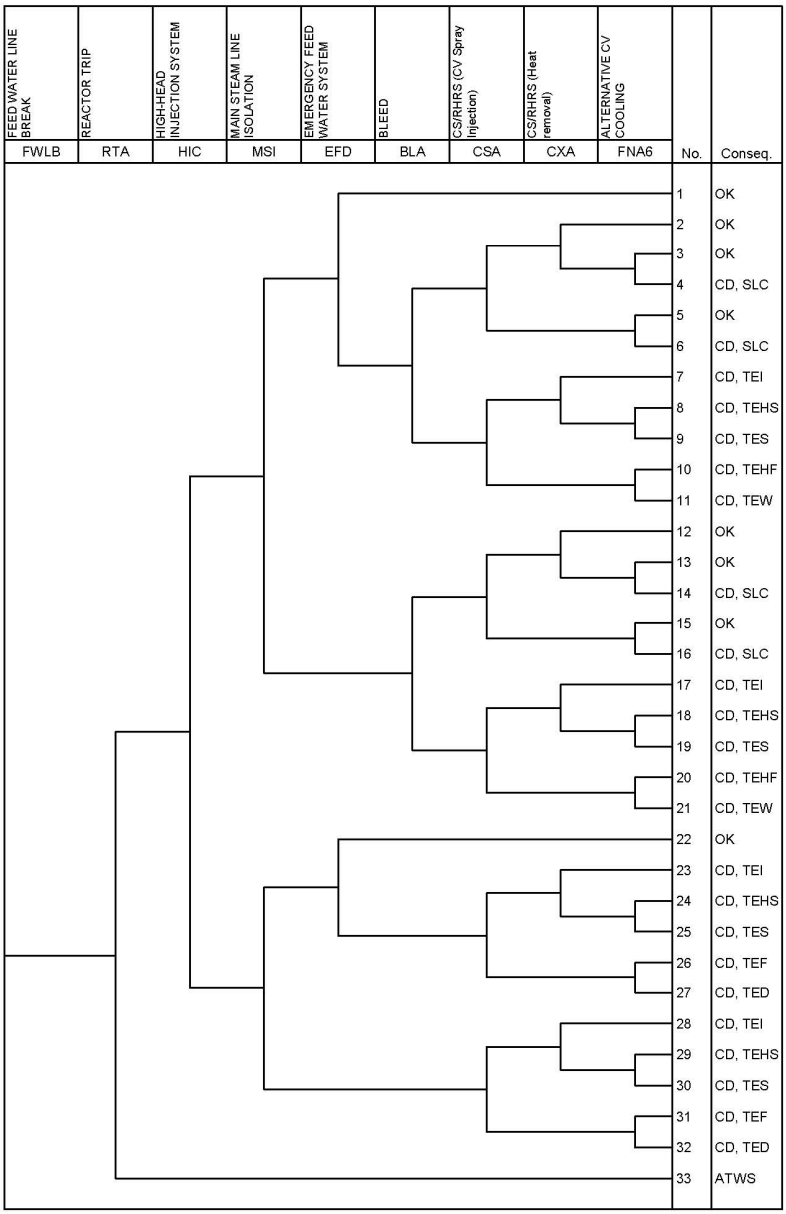

Figure 19.1-1 Event Tree (Sheet 8 of 19) (Feed Water Line Break)

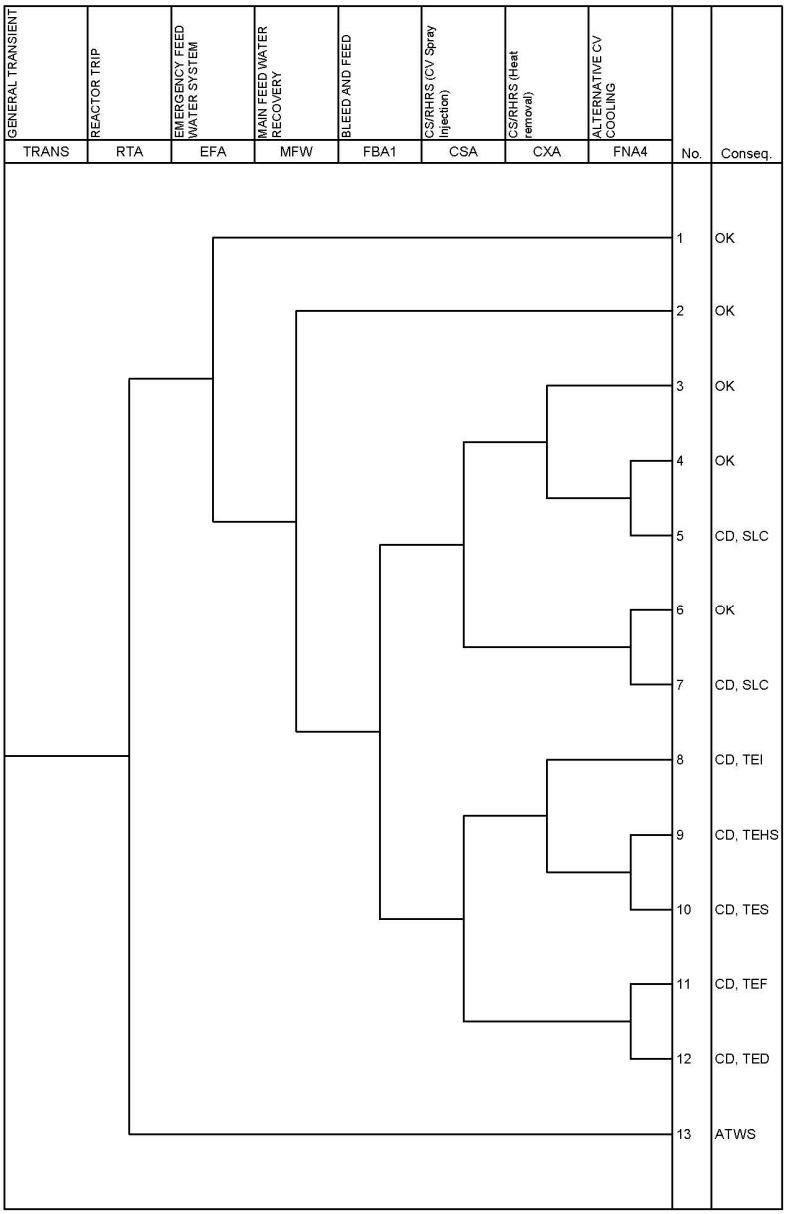

Figure 19.1-1 Event Tree (Sheet 9 of 19) (General Transient)

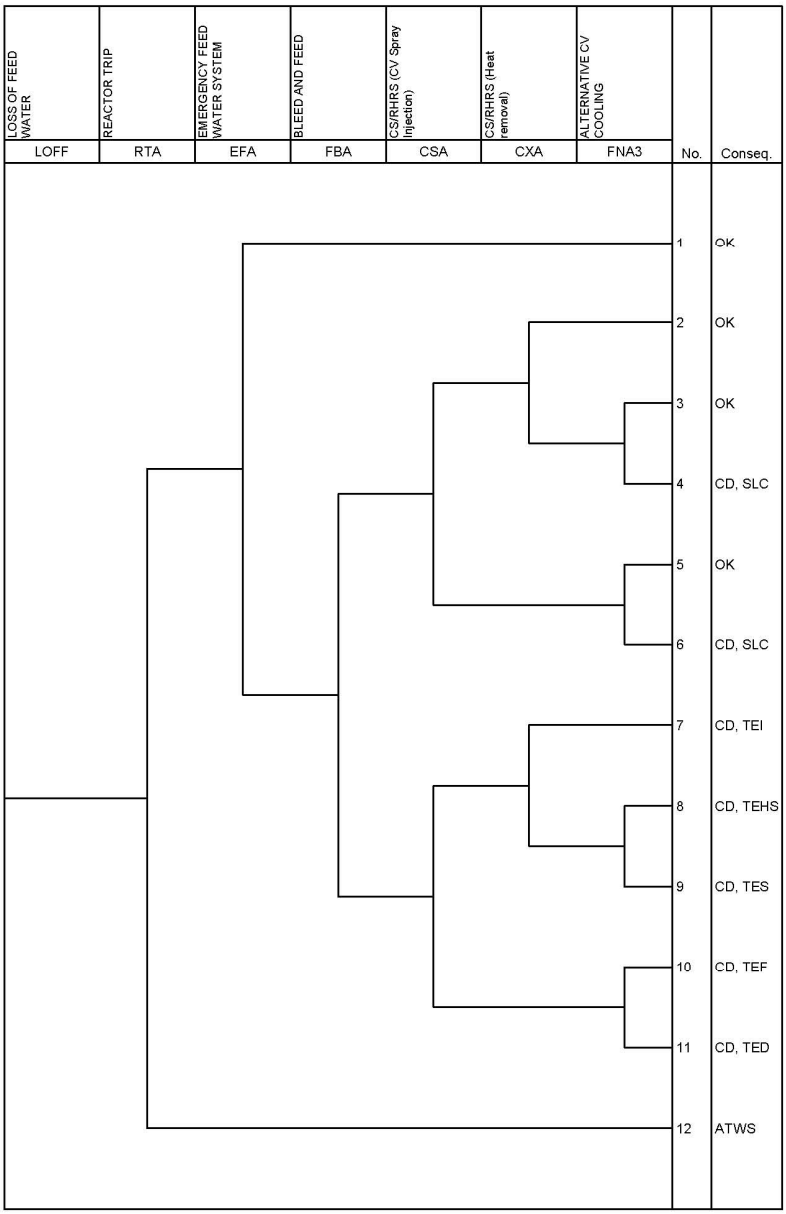

Figure 19.1-1 Event Tree (Sheet 10 of 19) (Loss of Feed Water)

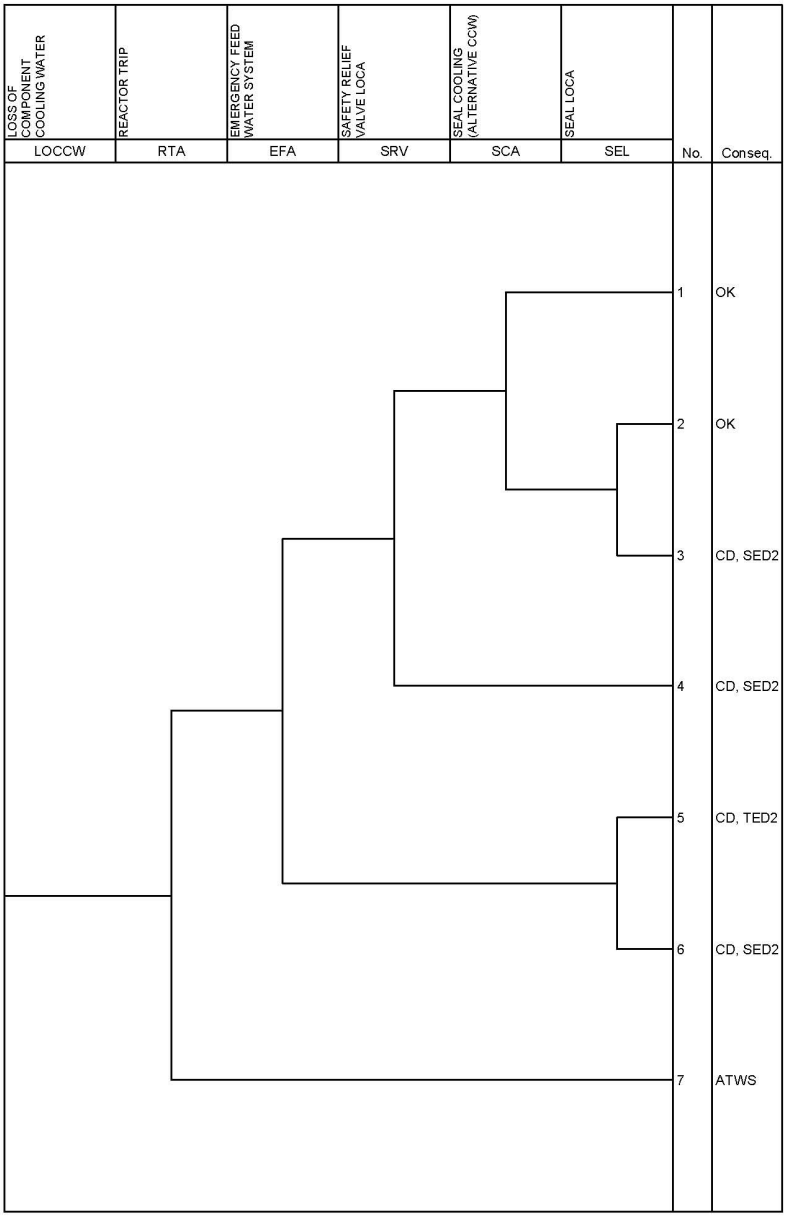

Figure 19.1-1 Event Tree (Sheet 11 of 19) (Loss of Component Cooling Water)

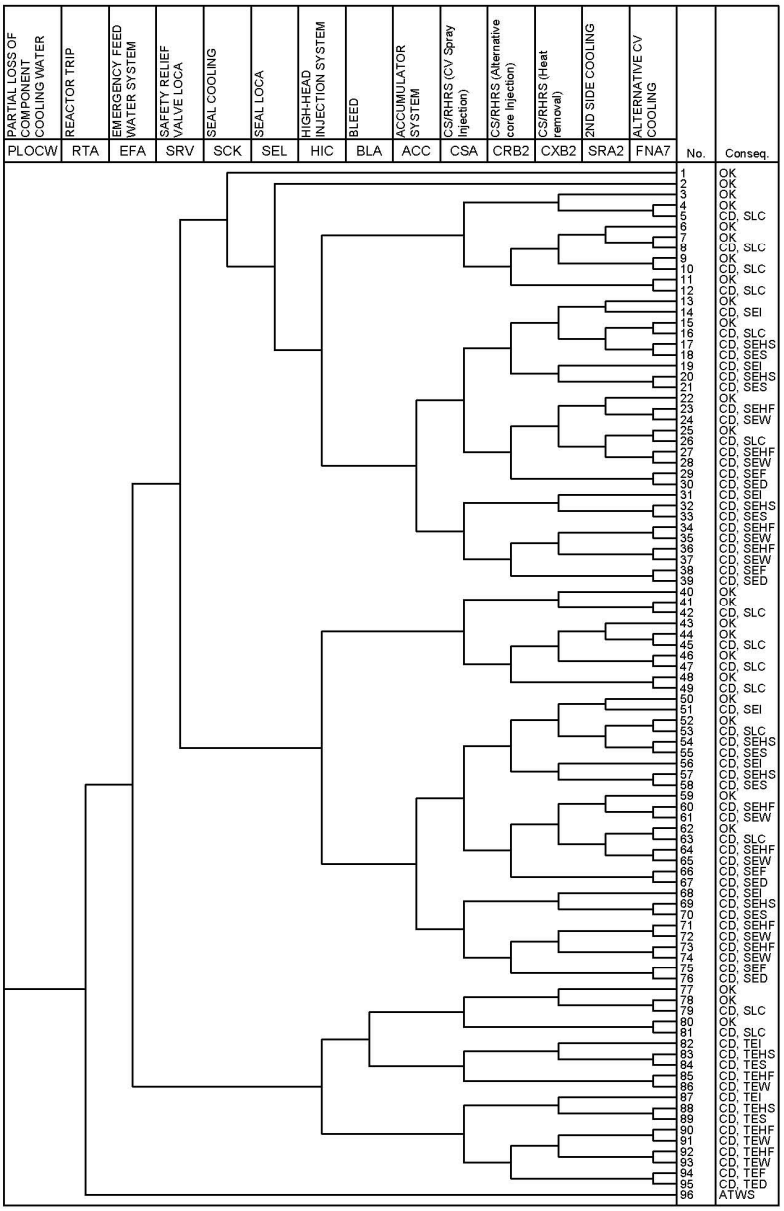

Figure 19.1-1 Event Tree (Sheet 12 of 19)
(Partial Loss of Component Cooling Water)

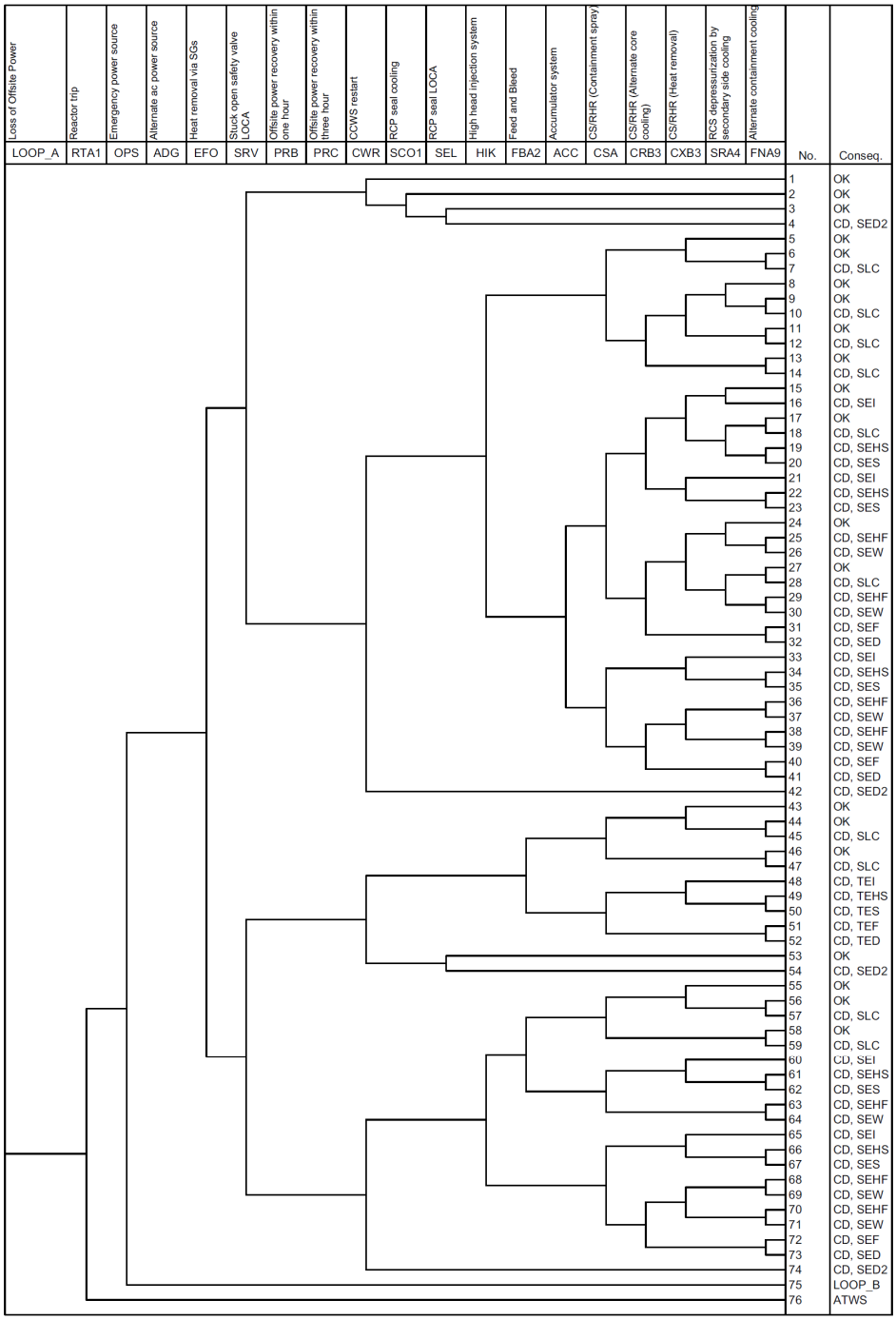

Figure 19.1-1 Event Tree (Sheet 13 of 19) (Loss of Offsite Power [1/4])

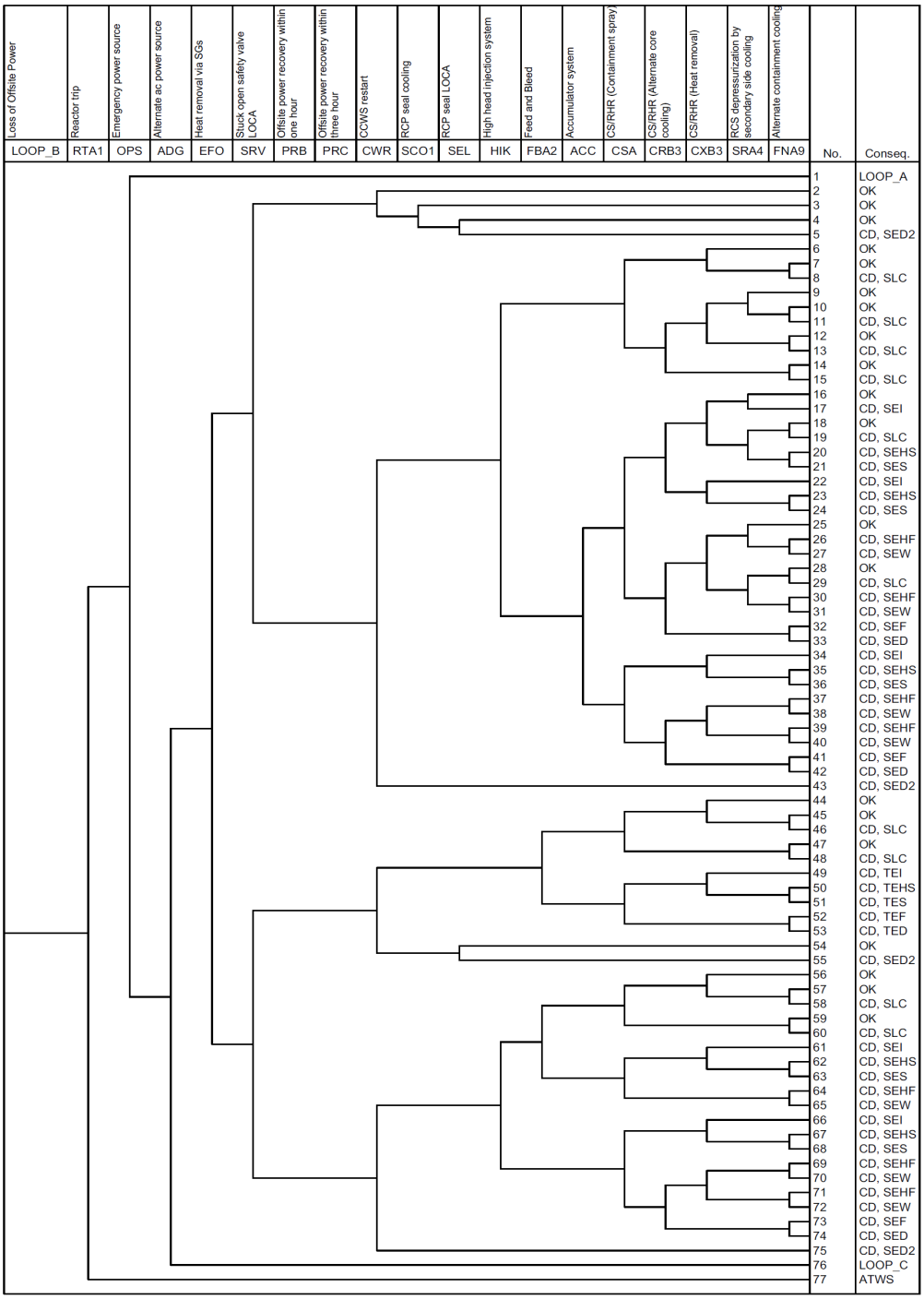

Figure 19.1-1 Event Tree (Sheet 14 of 19) (Loss of Offsite Power [2/4])

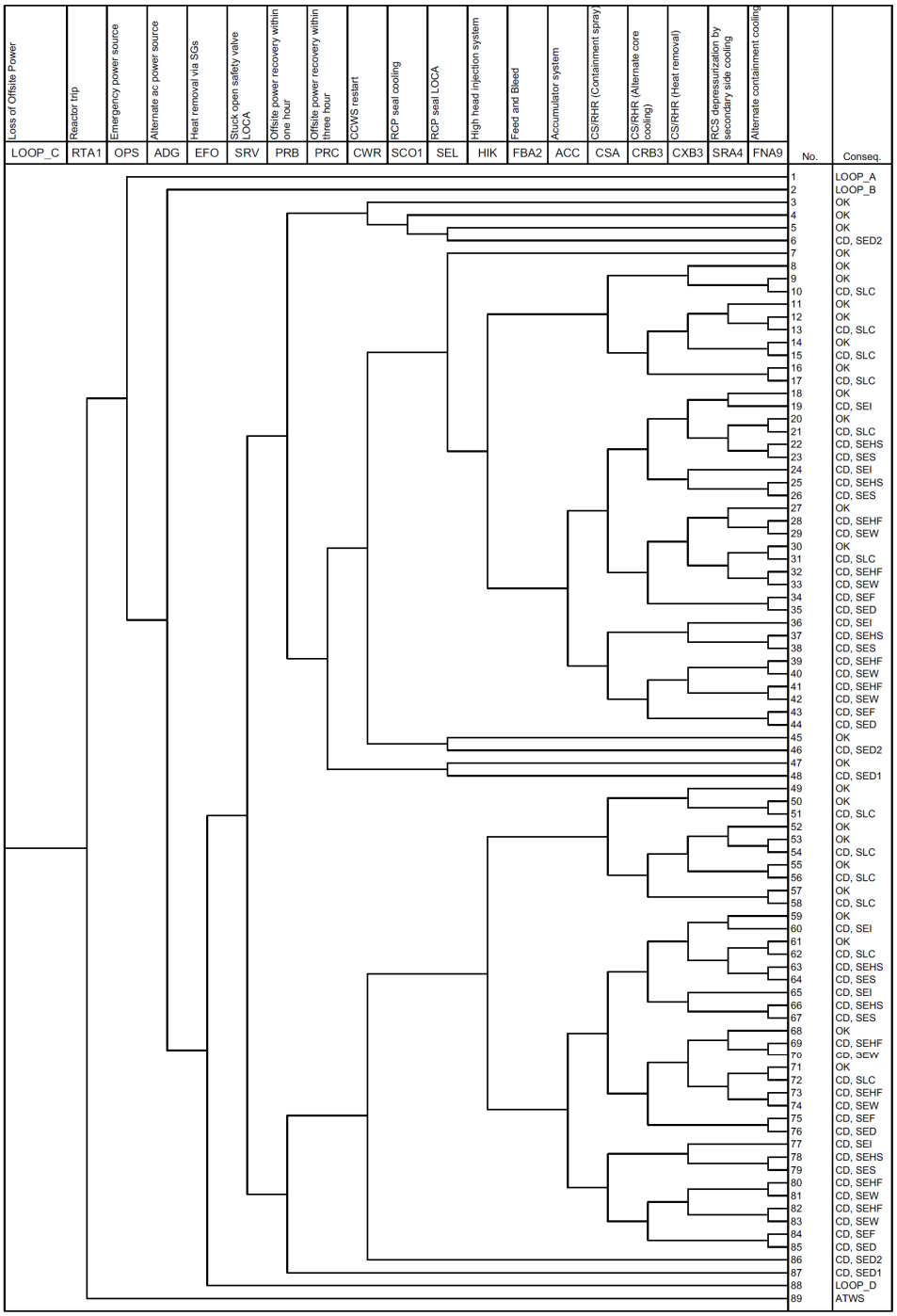

Figure 19.1-1 Event Tree (Sheet 15 of 19) (Loss of Offsite Power [3/4])

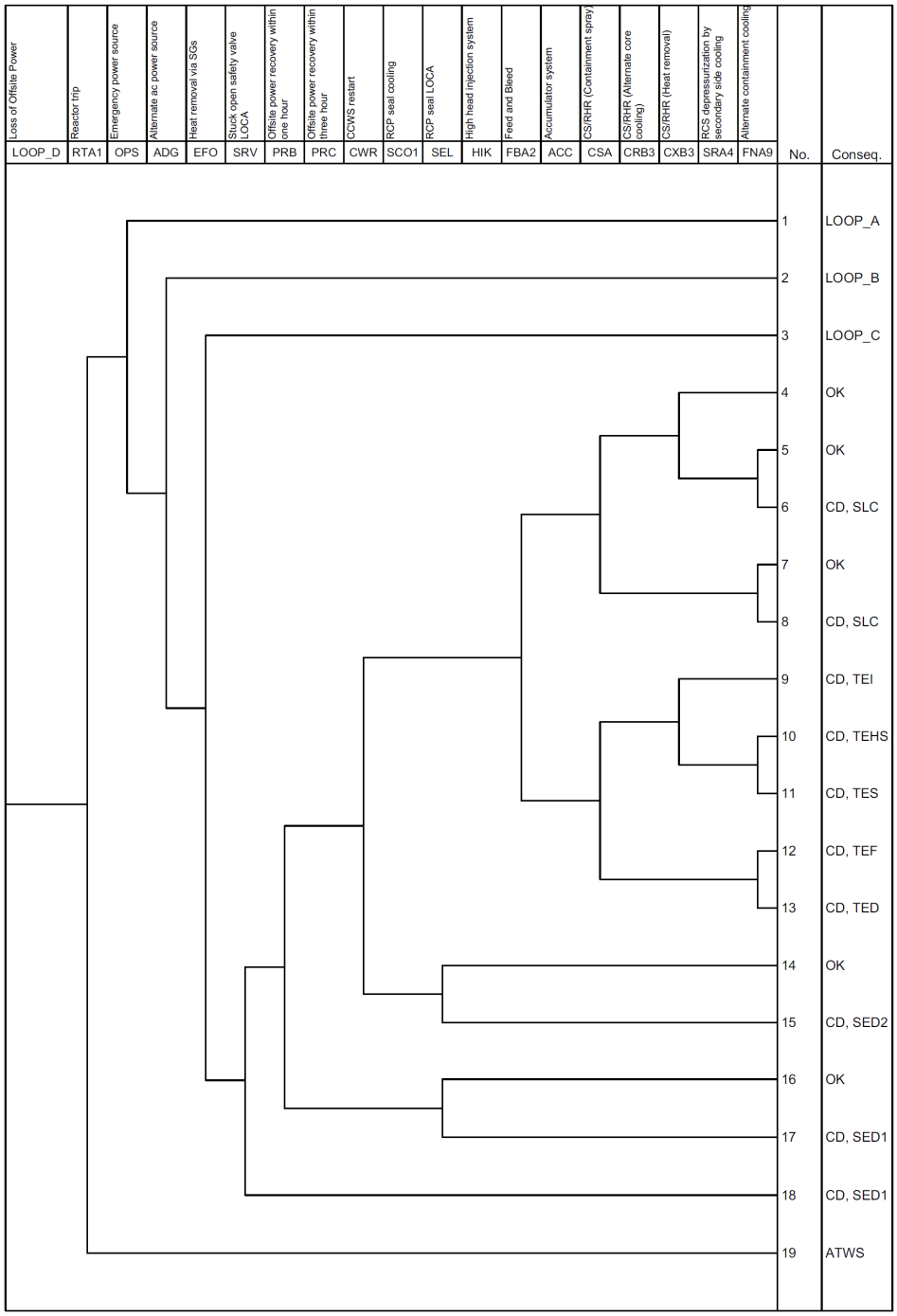

Figure 19.1-1 Event Tree (Sheet 16 of 19) (Loss of Offsite Power [4/4])

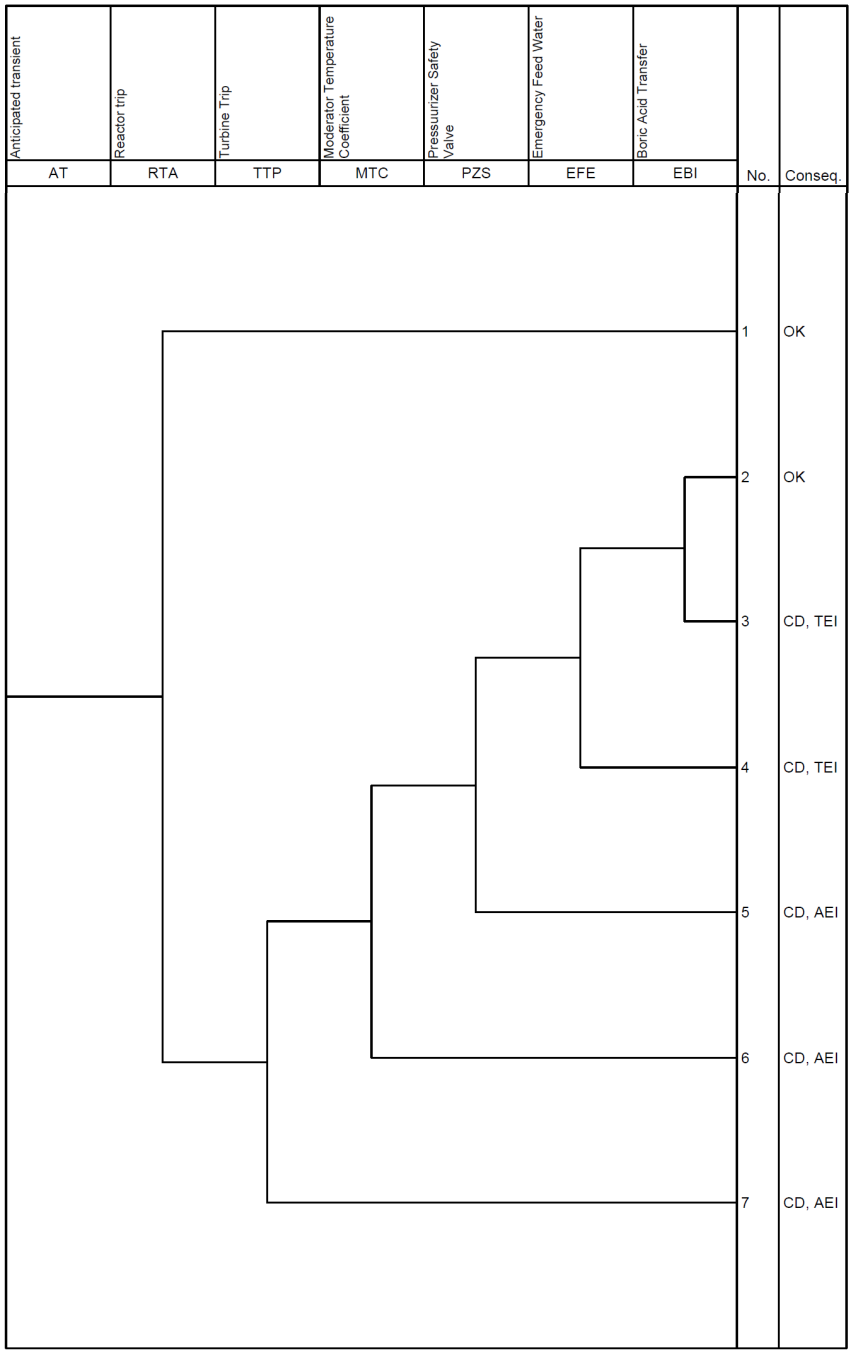

Figure 19.1-1 Event Tree (Sheet 17 of 19) (ATWS)

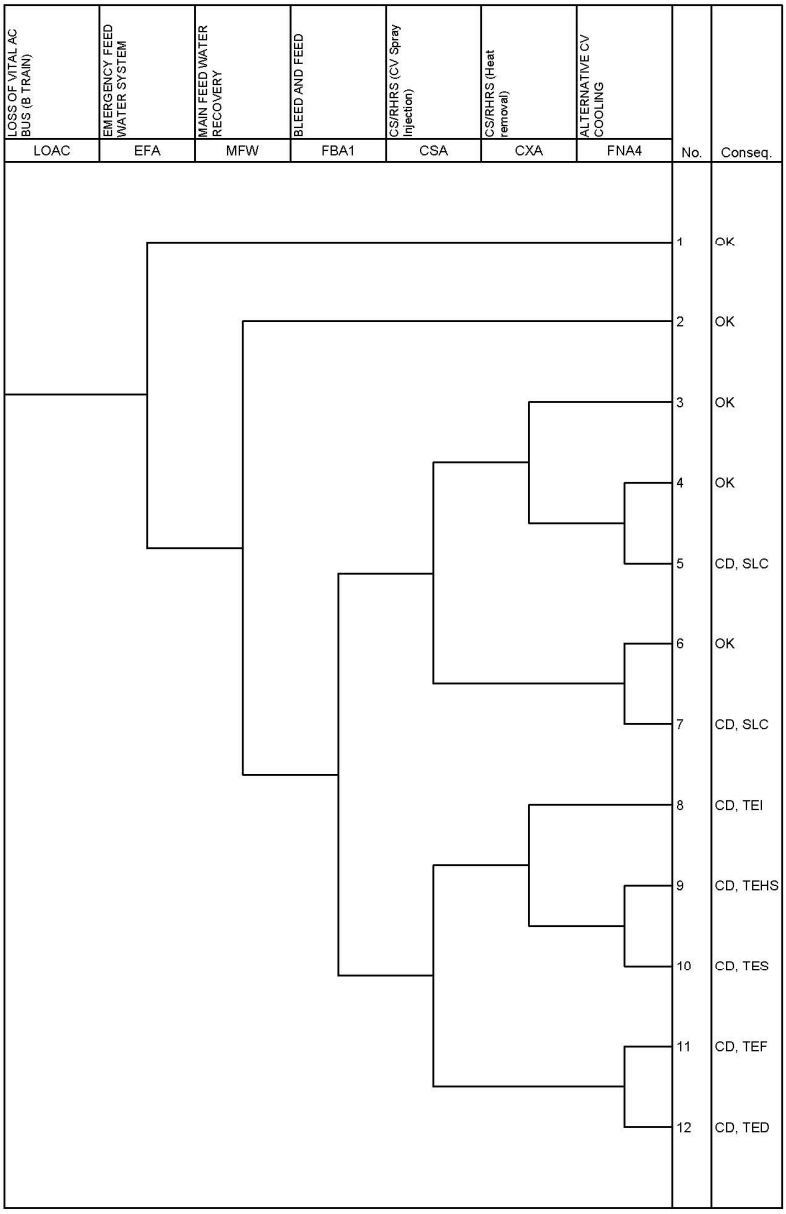

Figure 19.1-1 Event Tree (Sheet 18 of 19) (Loss of Vital AC)

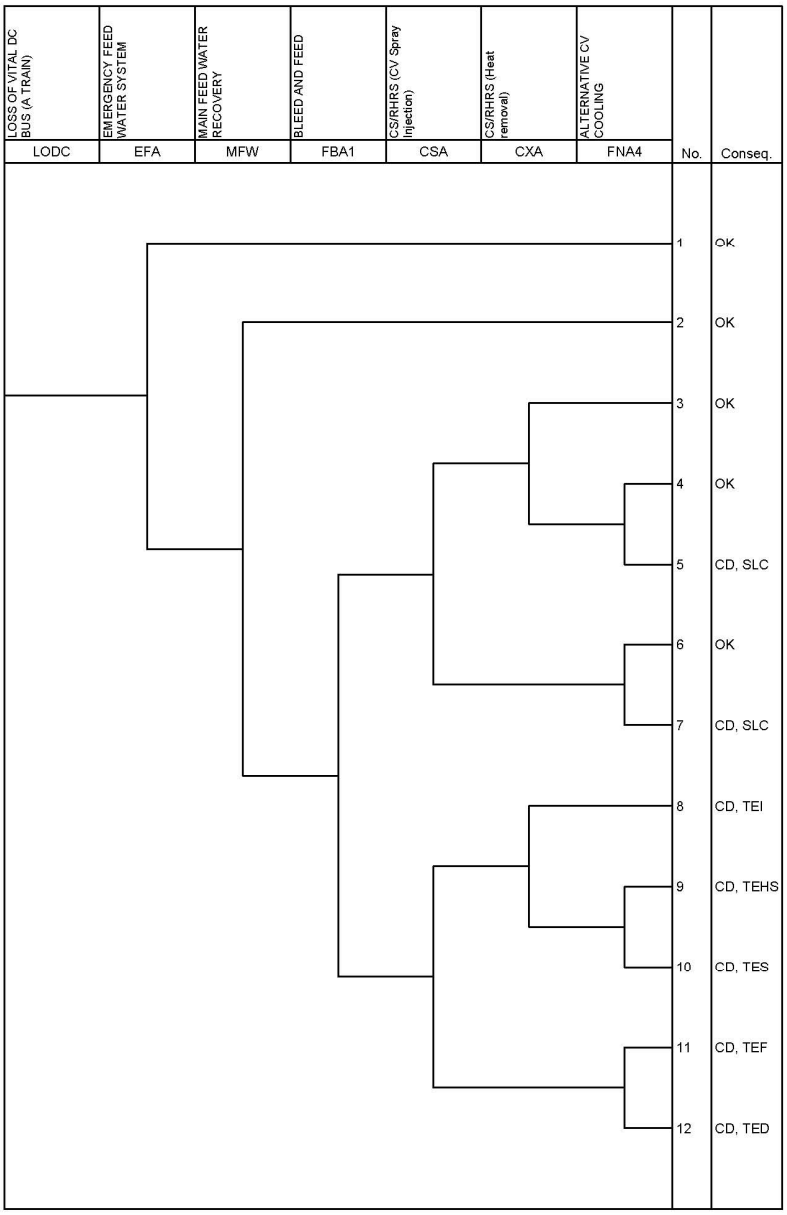

Figure 19.1-1 Event Tree (Sheet 19 of 19) (Loss of Vital DC)

REMARK:
SYSTEM NAME (RCS) OF THE SAFETY INJECTION SYSTEM IS OMITTED FROM THE COMPONENT ID.

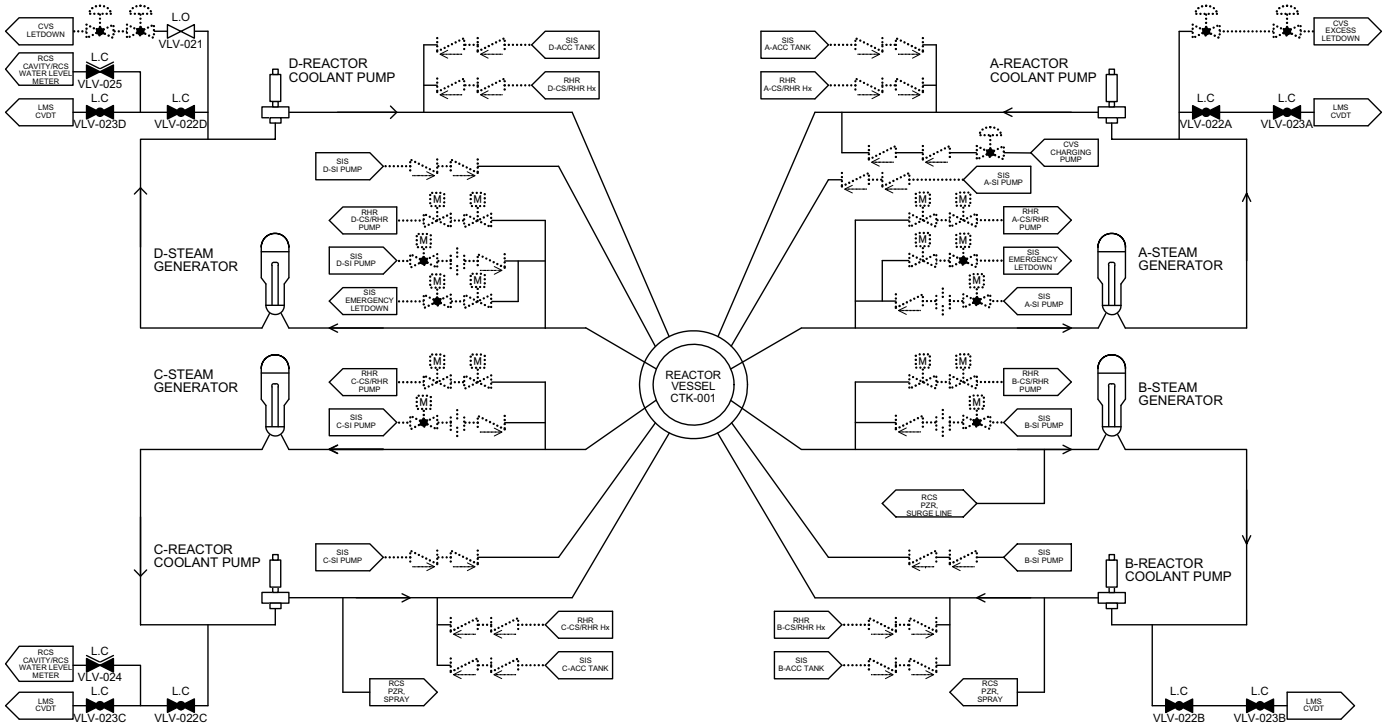

Figure 19.1-2 Simplified System Diagram (Sheet 1 of 42) (Reactor Coolant System)

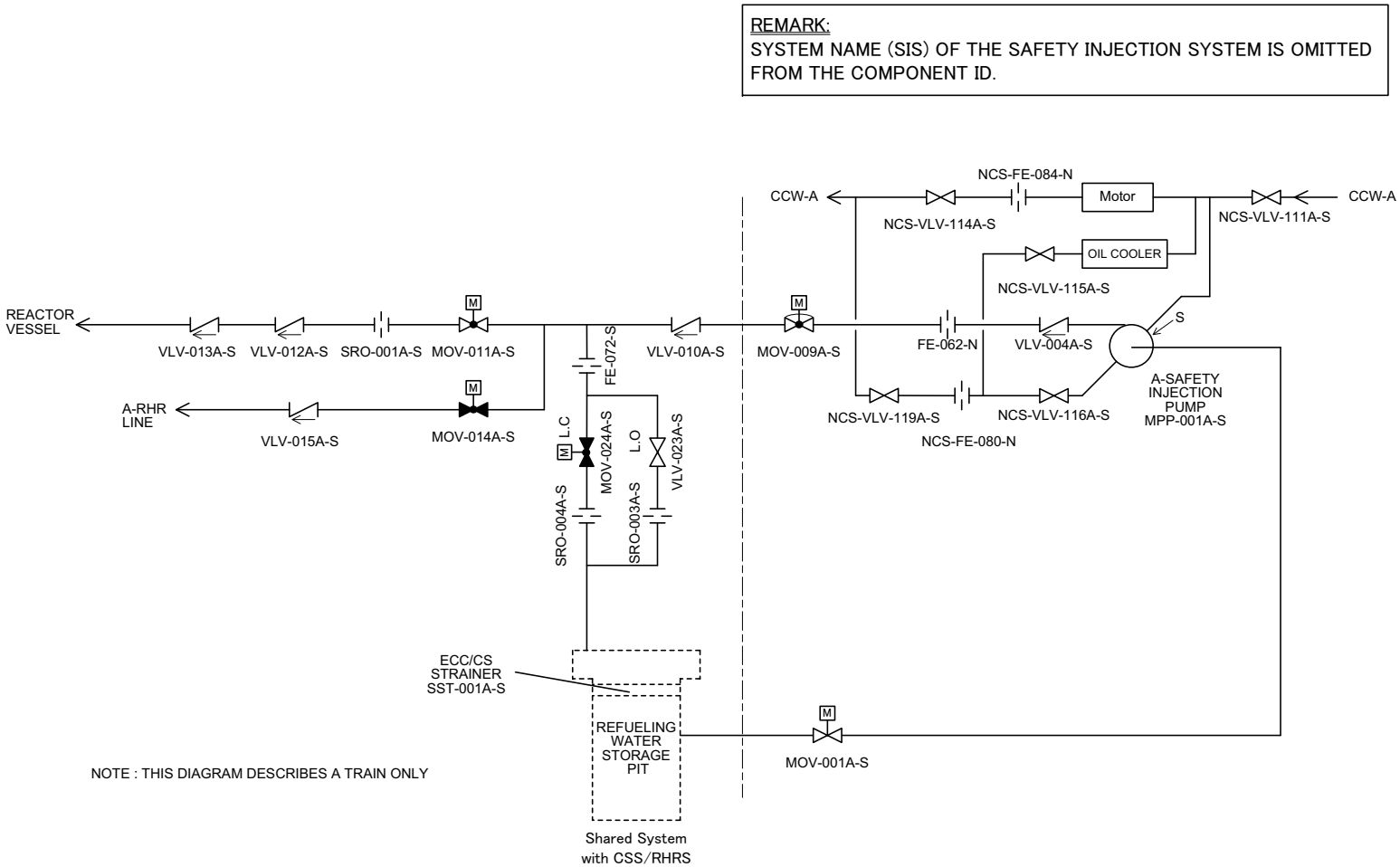

Figure 19.1-2 Simplified System Diagram (Sheet 2 of 42) (Safety Injection System)

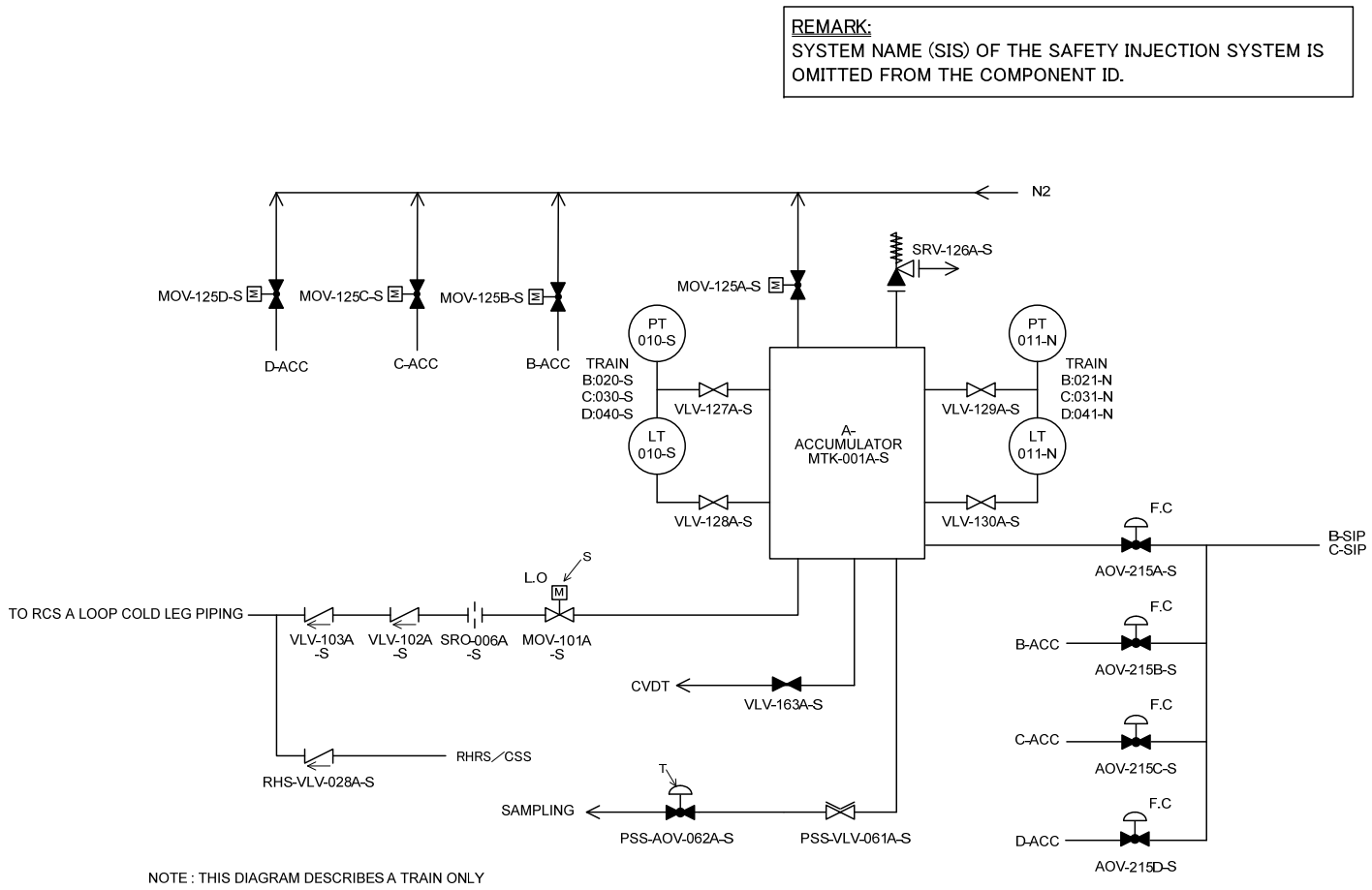

Figure 19.1-2 Simplified System Diagram (Sheet 3 of 42) (Accumulator Injection System)

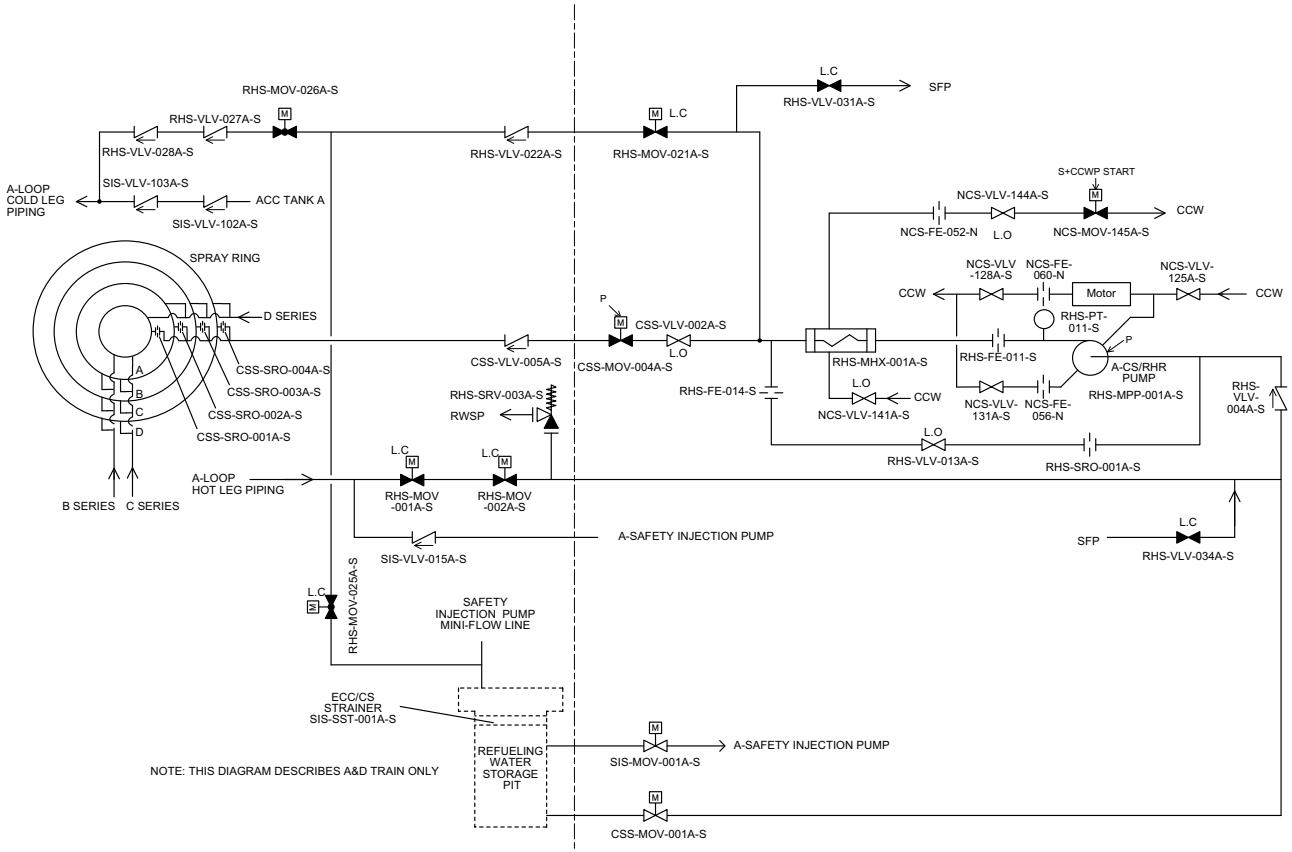

Figure 19.1-2 Simplified System Diagram (Sheet 4 of 42) (Containment Spray System/Residual Heat Removal System [Train A&D])

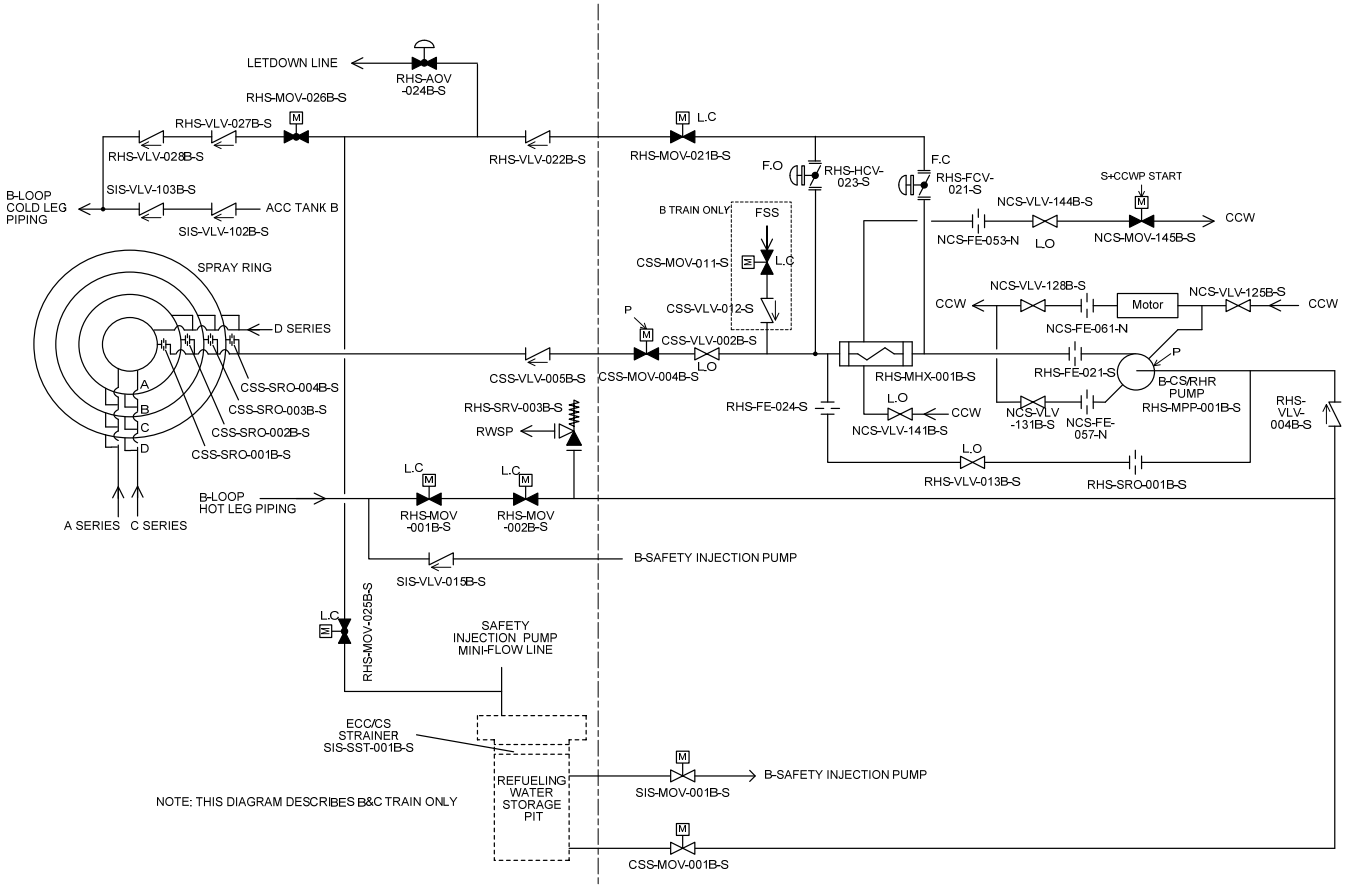

Figure 19.1-2 Simplified System Diagram (Sheet 5 of 42) (Containment Spray System/Residual Heat Removal System [Train B&C])

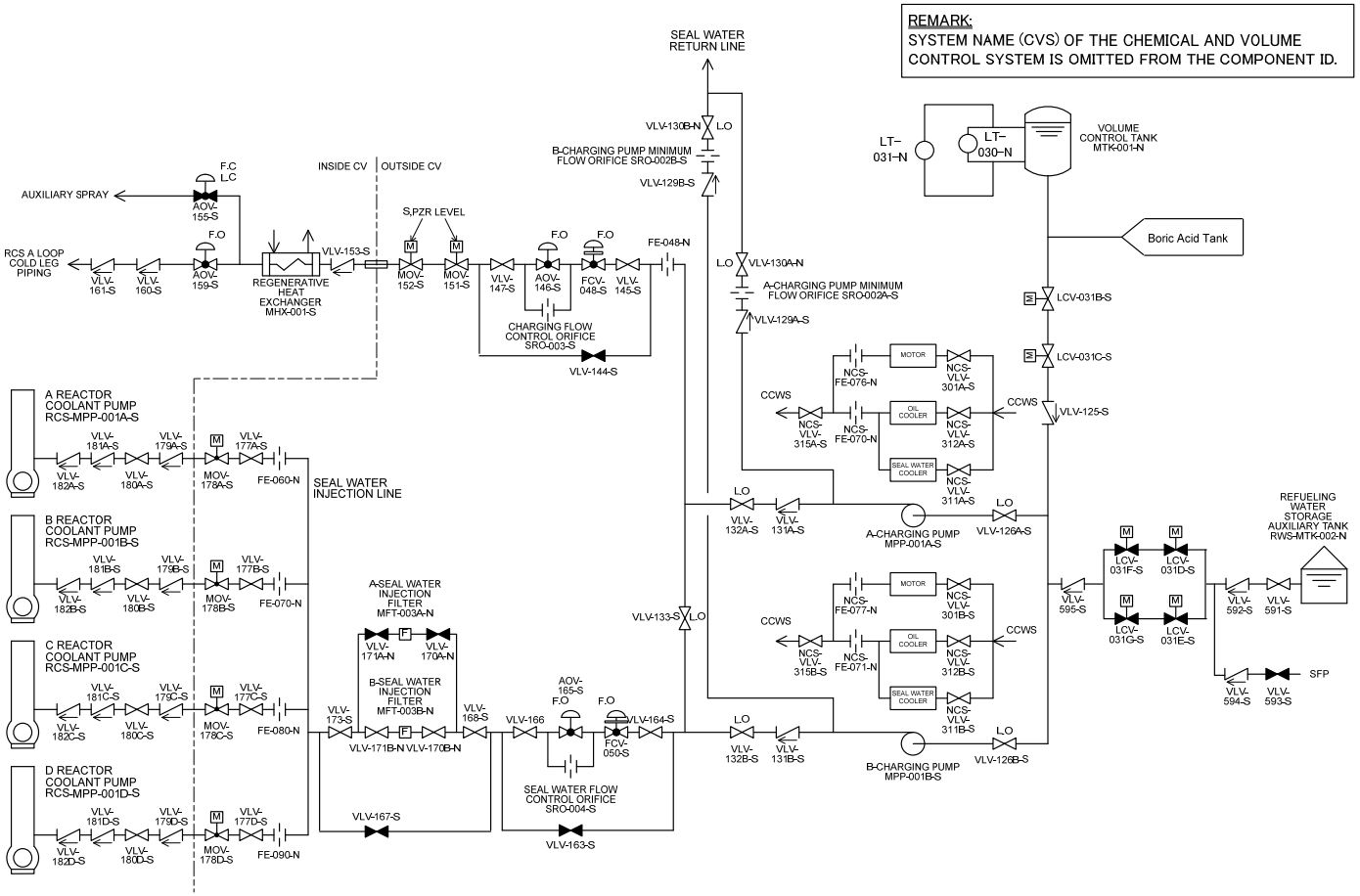

Figure 19.1-2 Simplified System Diagram (Sheet 6 of 42) (Charging Injection System)

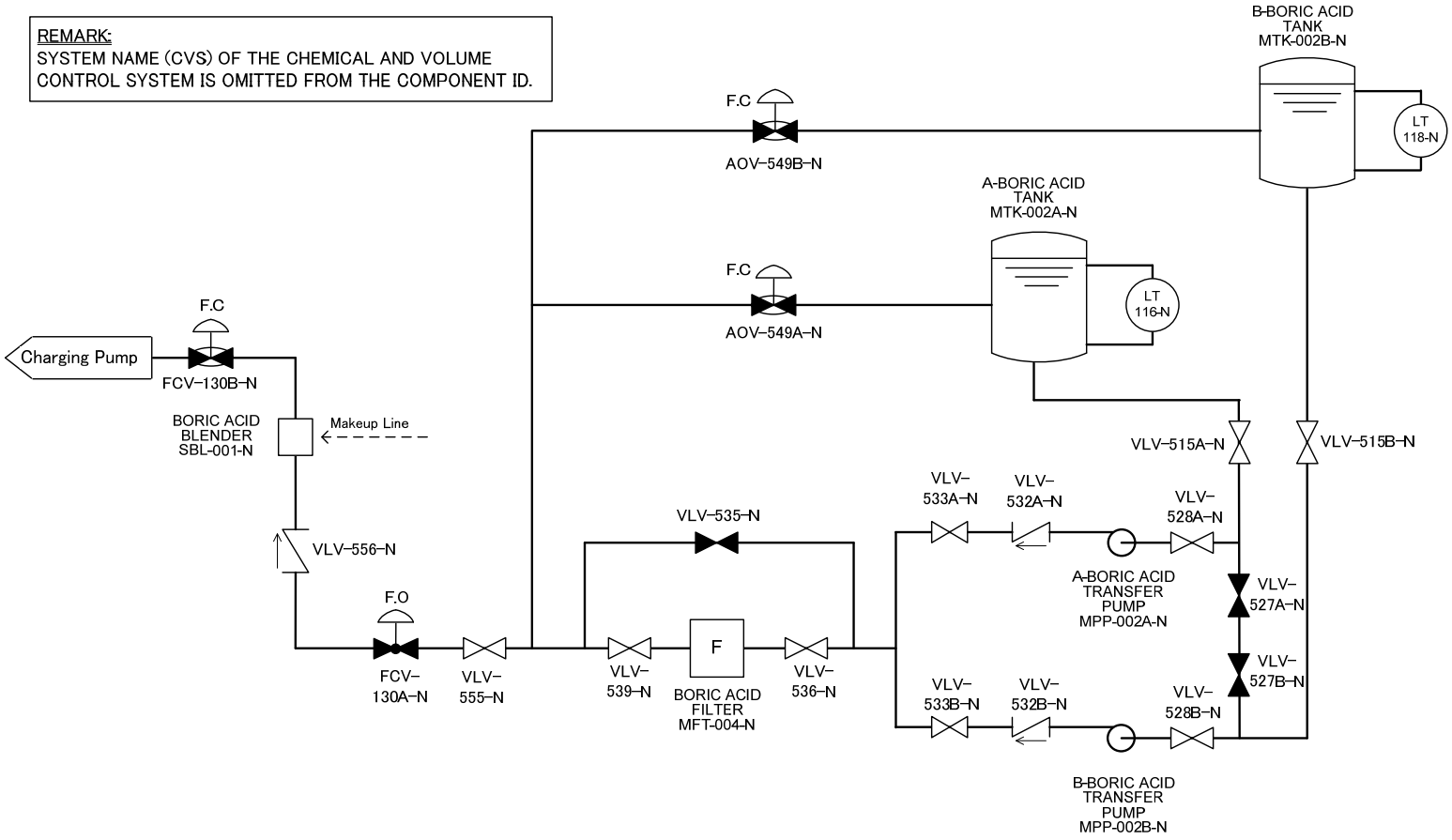

Figure 19.1-2 Simplified System Diagram (Sheet 7 of 42) (Boric Acid Transfer)

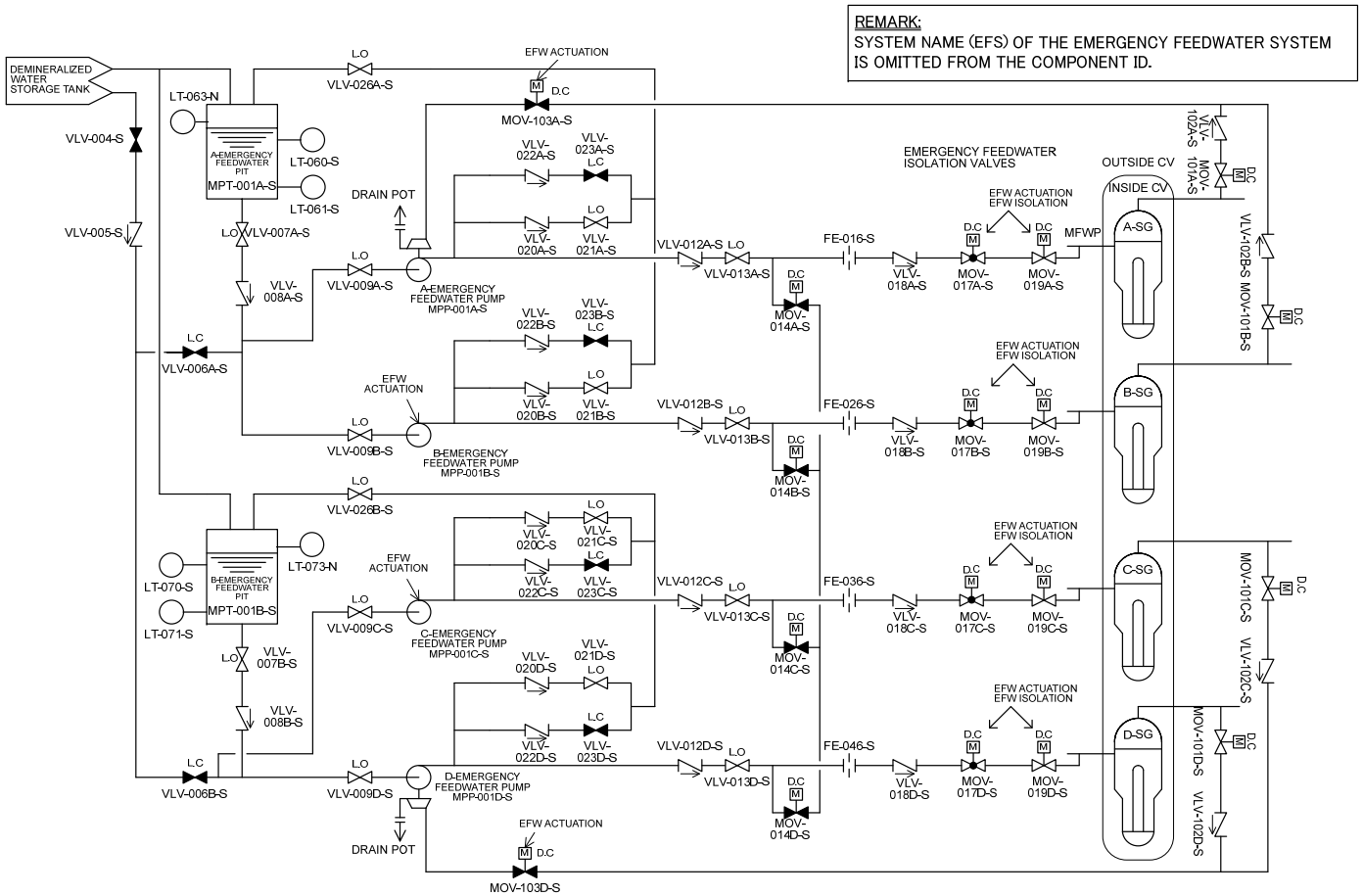

Figure 19.1-2 Simplified System Diagram (Sheet 8 of 42) (Emergency Feedwater System)

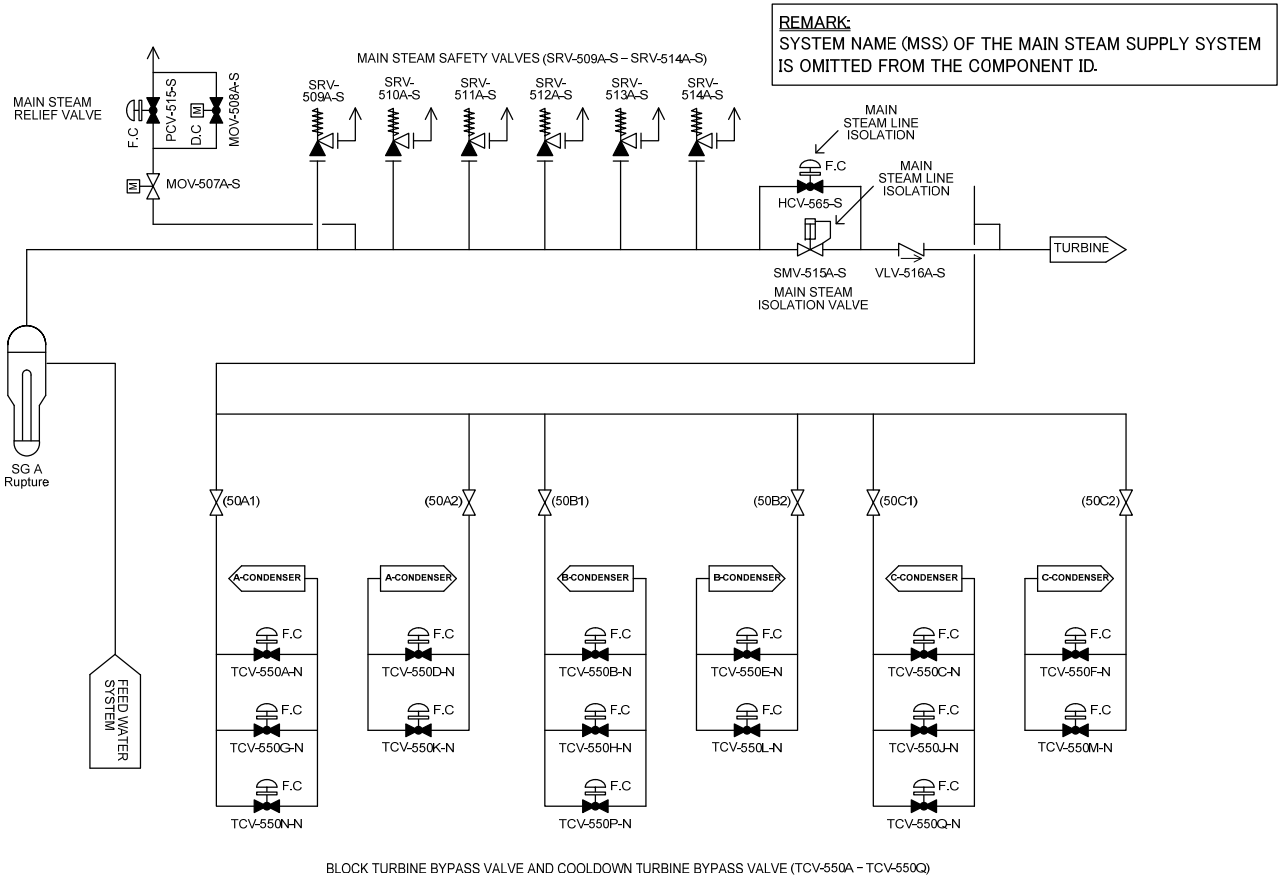

Figure 19.1-2 Simplified System Diagram (Sheet 9 of 42)
(Main Steam Pressure Control System [for Ruptured Steam Generator Isolation])

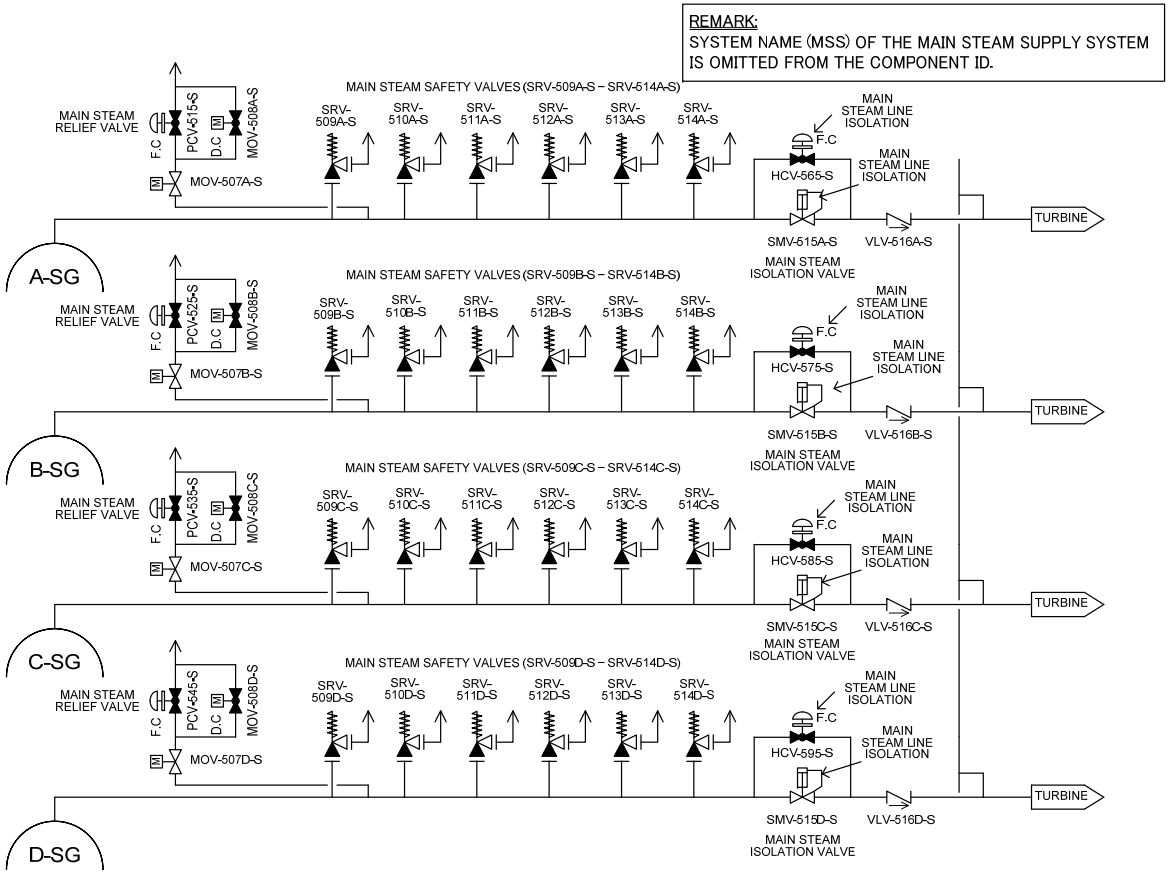

Figure 19.1-2 Simplified System Diagram (Sheet 10 of 42)
(Main Steam Pressure Control System [for Main Steam Relief])

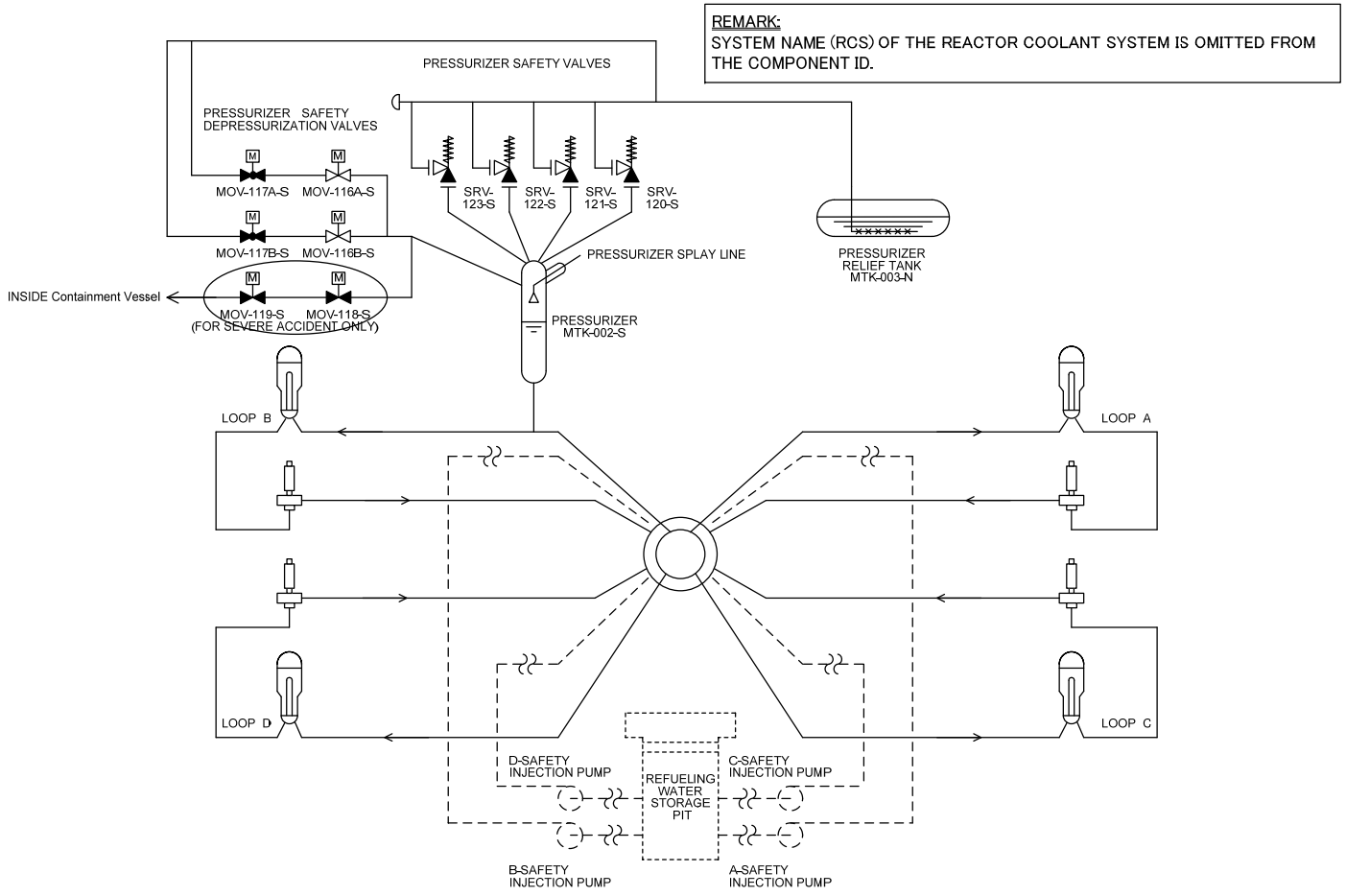

Figure 19.1-2 Simplified System Diagram (Sheet 11 of 42) (Pressurizer Pressure Control System)

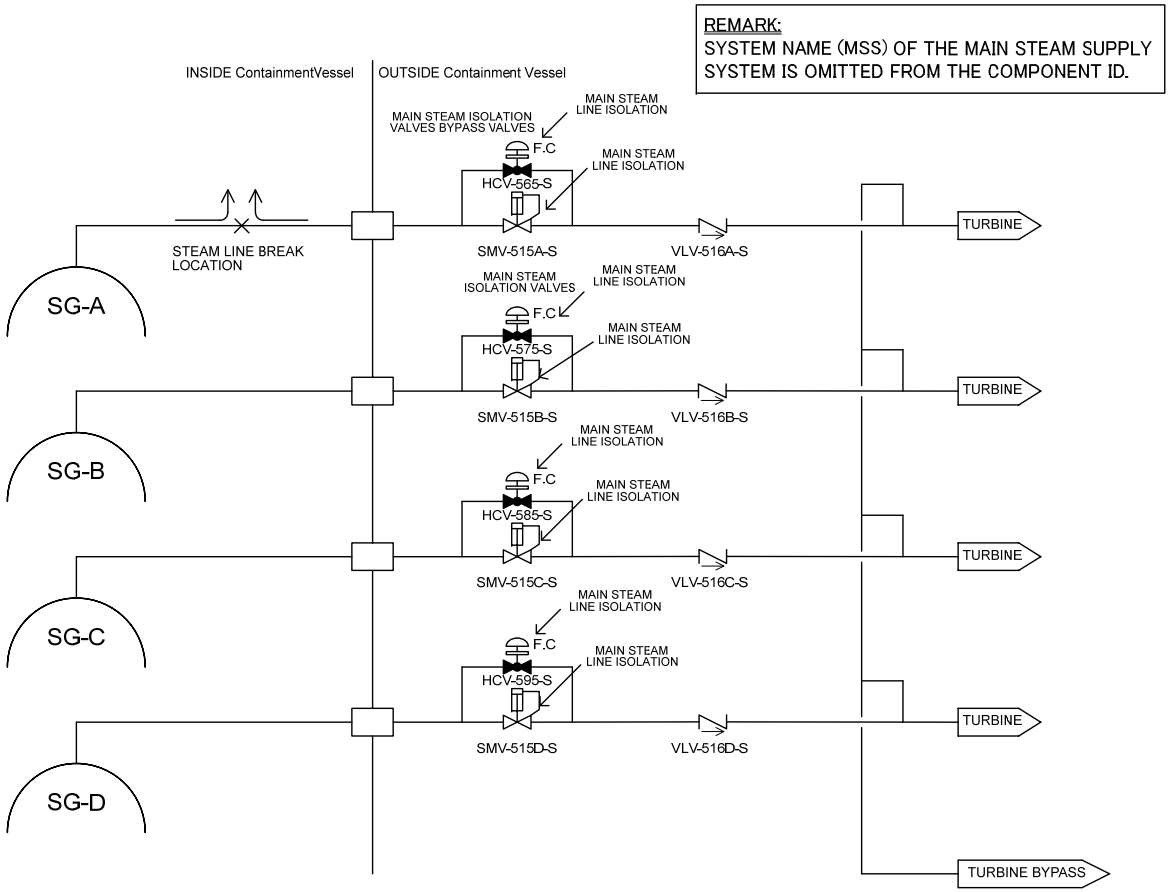

Figure 19.1-2 Simplified System Diagram (Sheet 12 of 42) (Main Steam Isolation System [Steam Line Break inside C/V])

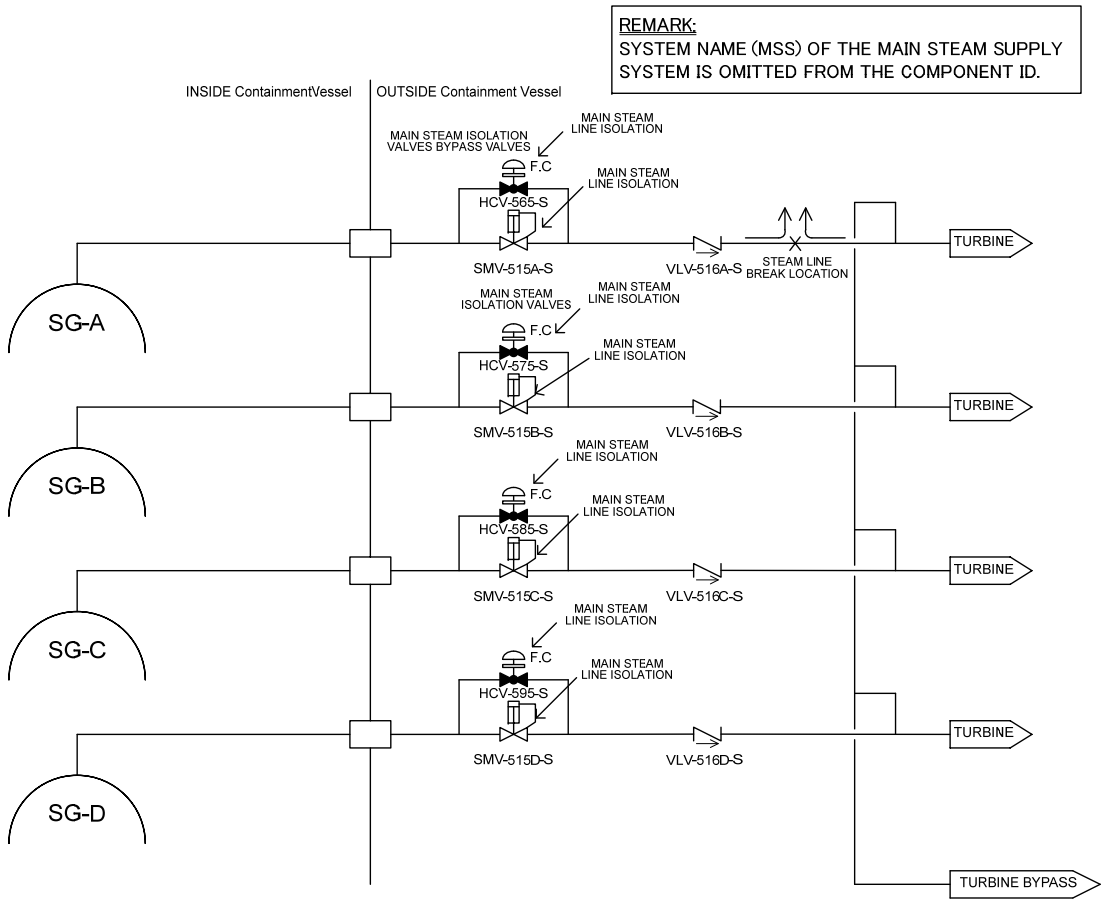

Figure 19.1-2 Simplified System Diagram (Sheet 13 of 42) (Main Steam Isolation System [Steam Line Break outside C/V])

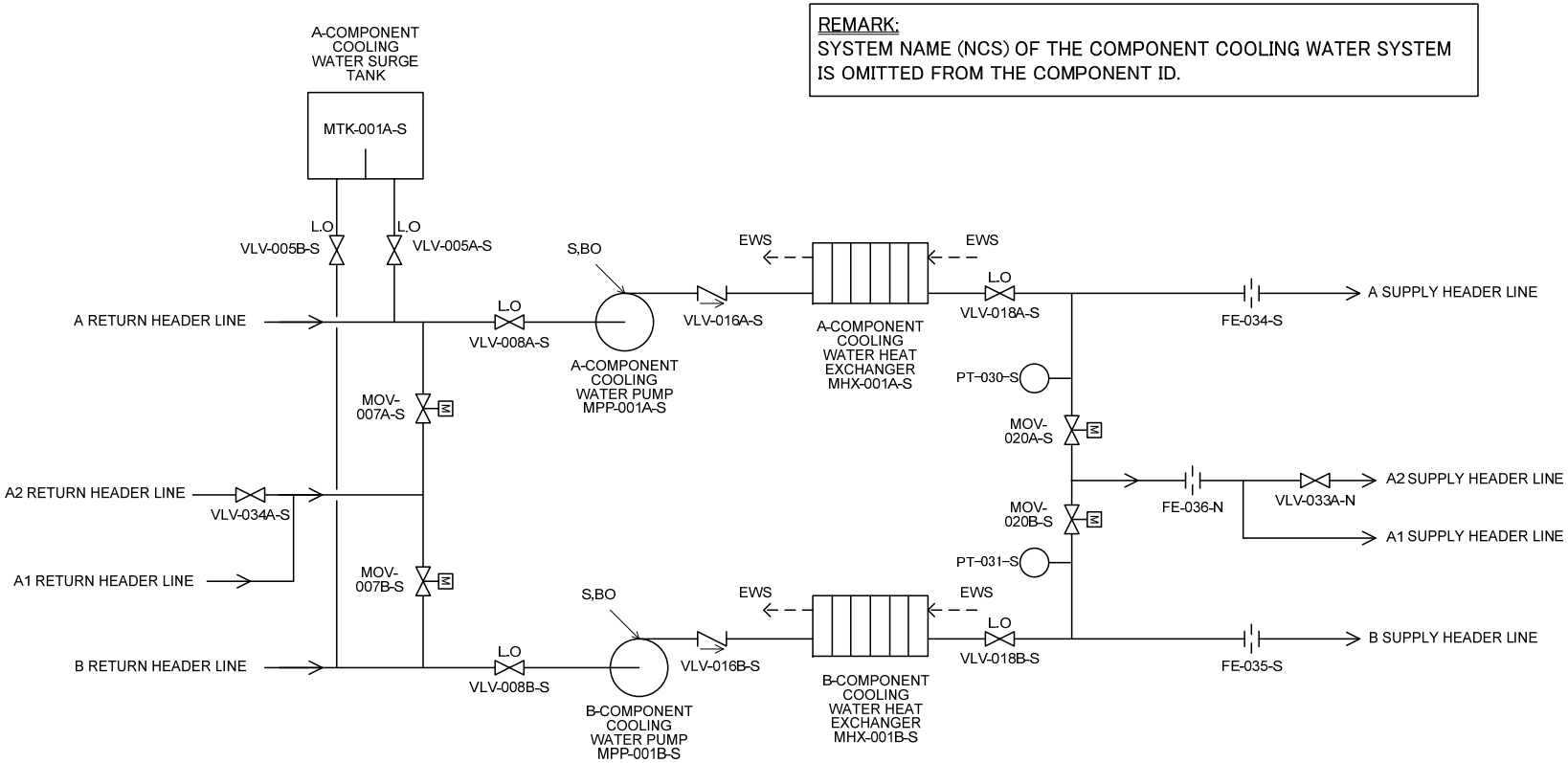

Figure 19.1-2 Simplified System Diagram (Sheet 14 of 42) (Component Cooling Water System [1 of 5])

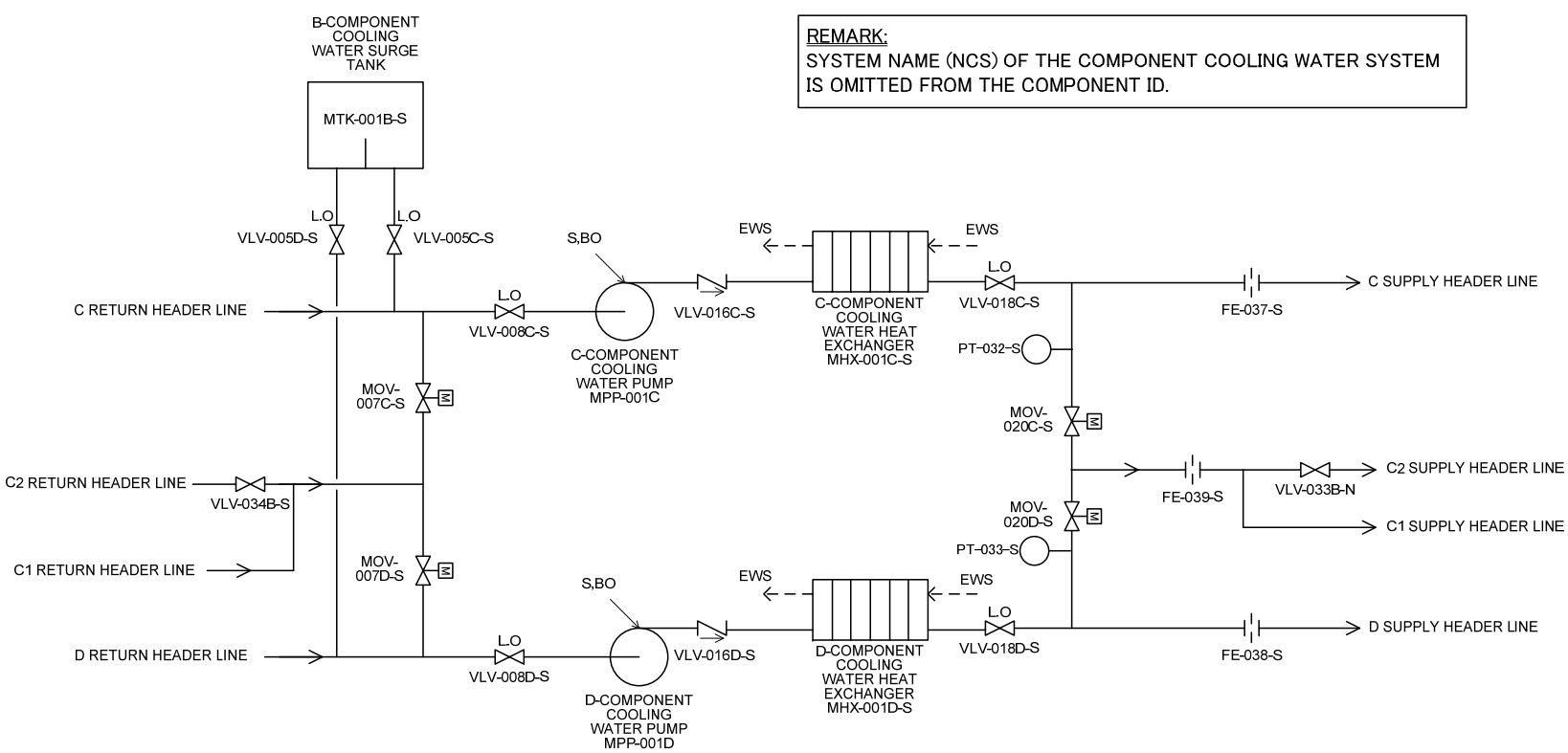

Figure 19.1-2 Simplified System Diagram (Sheet 15 of 42) (Component Cooling Water System [2 of 5])

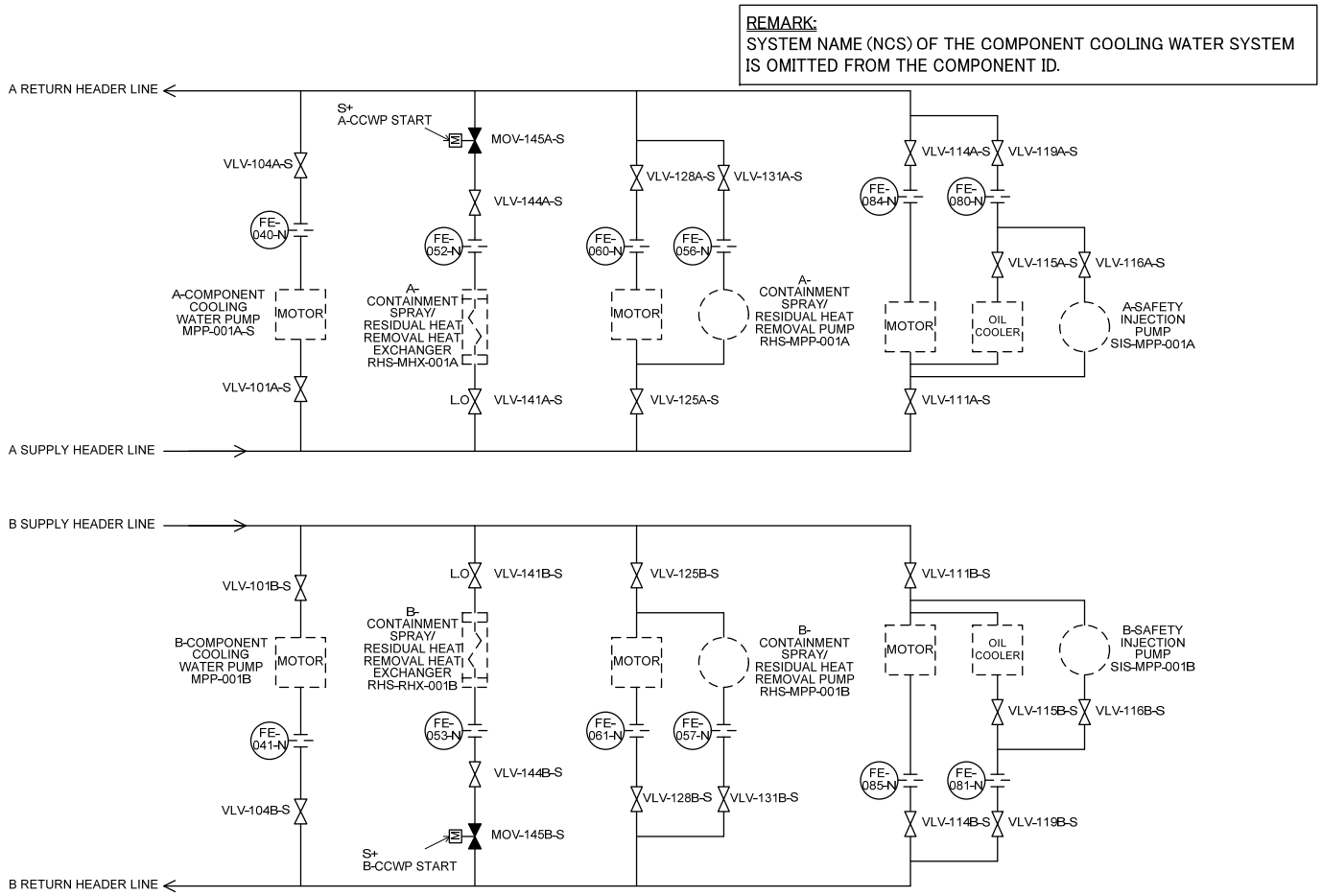

Figure 19.1-2 Simplified System Diagram (Sheet 16 of 42) (Component Cooling Water System [3 of 5])

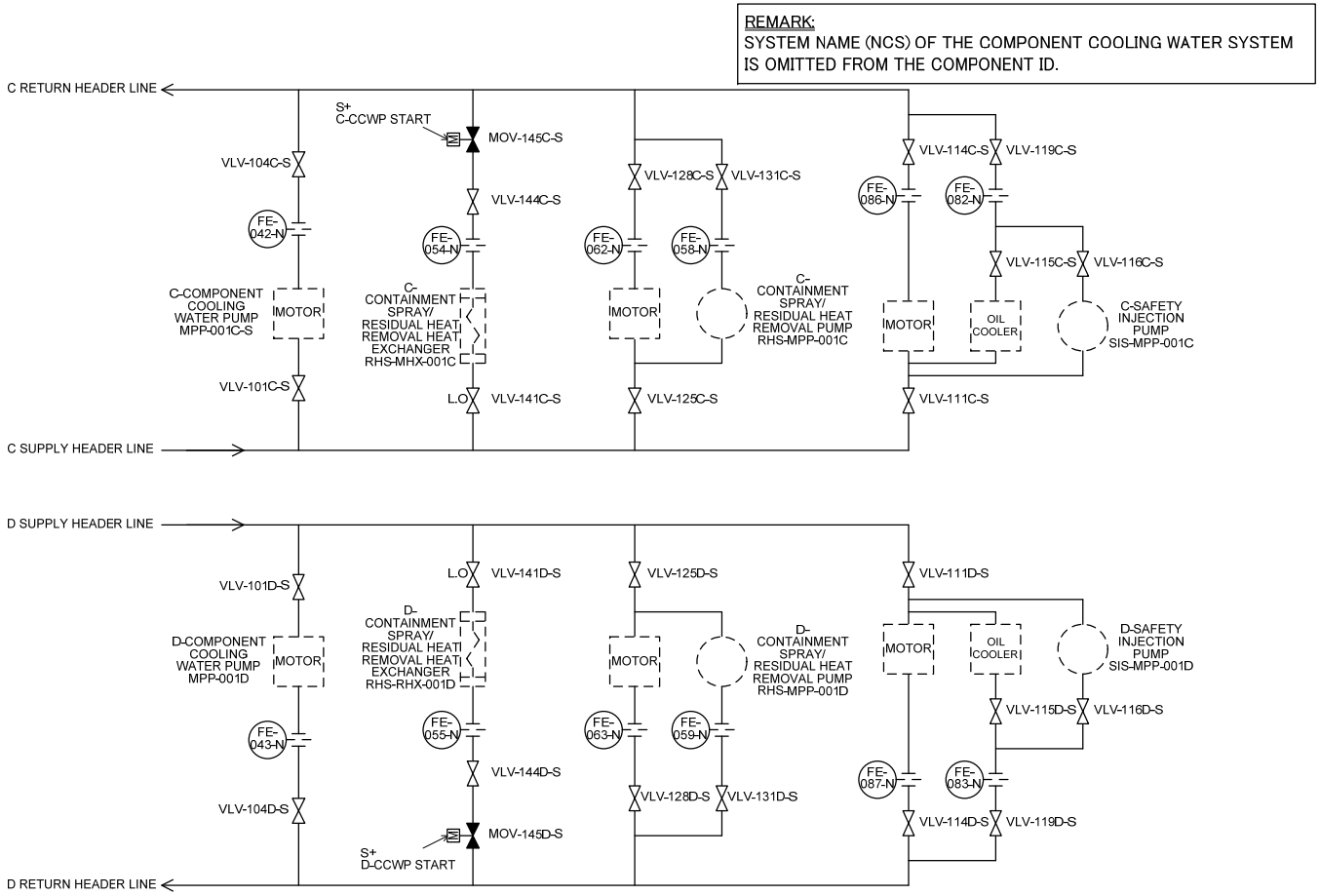

Figure 19.1-2 Simplified System Diagram (Sheet 17 of 42) (Component Cooling Water System [4 of 5])

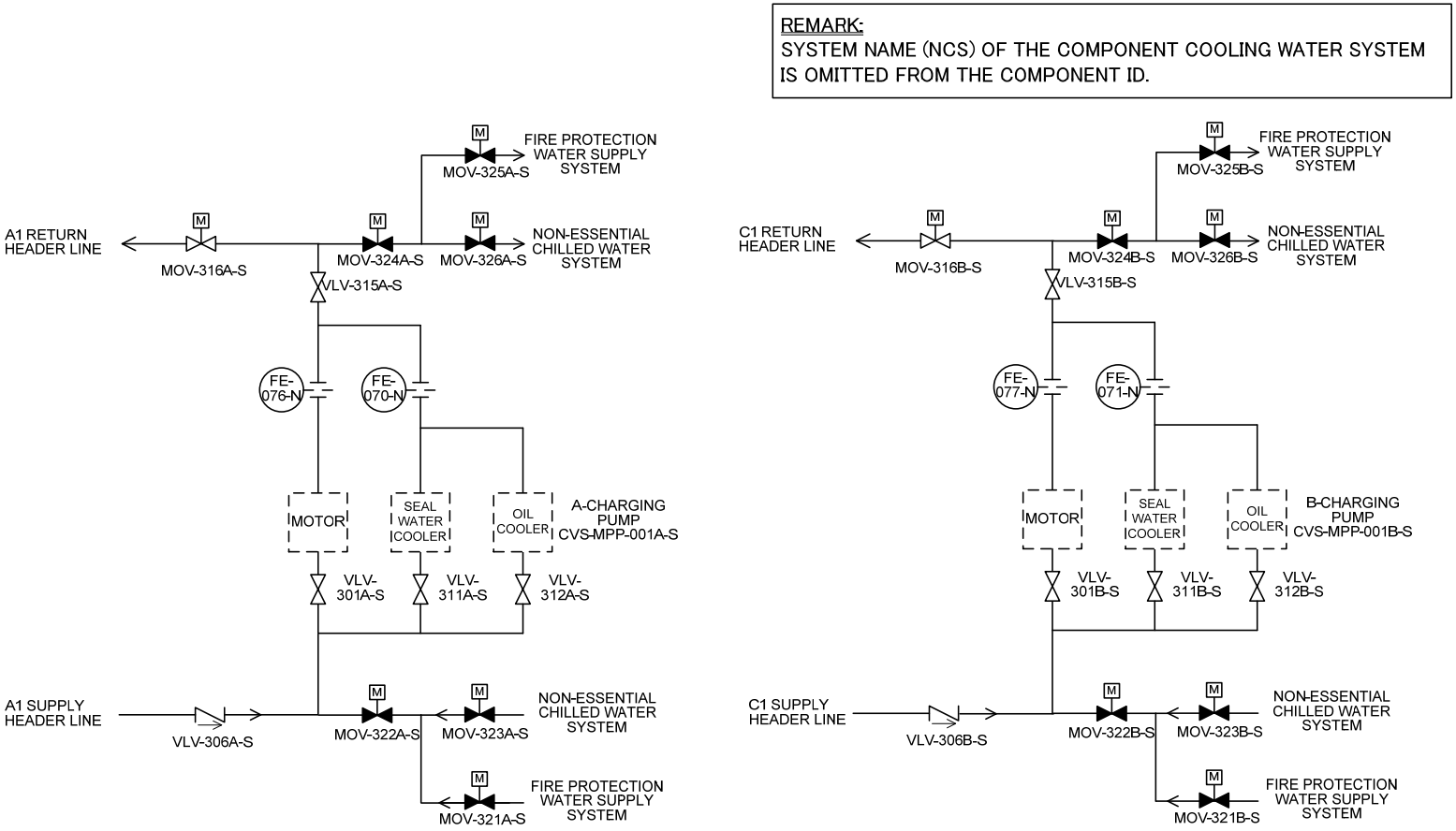

Figure 19.1-2 Simplified System Diagram (Sheet 18 of 42) (Component Cooling Water System [5 of 5])

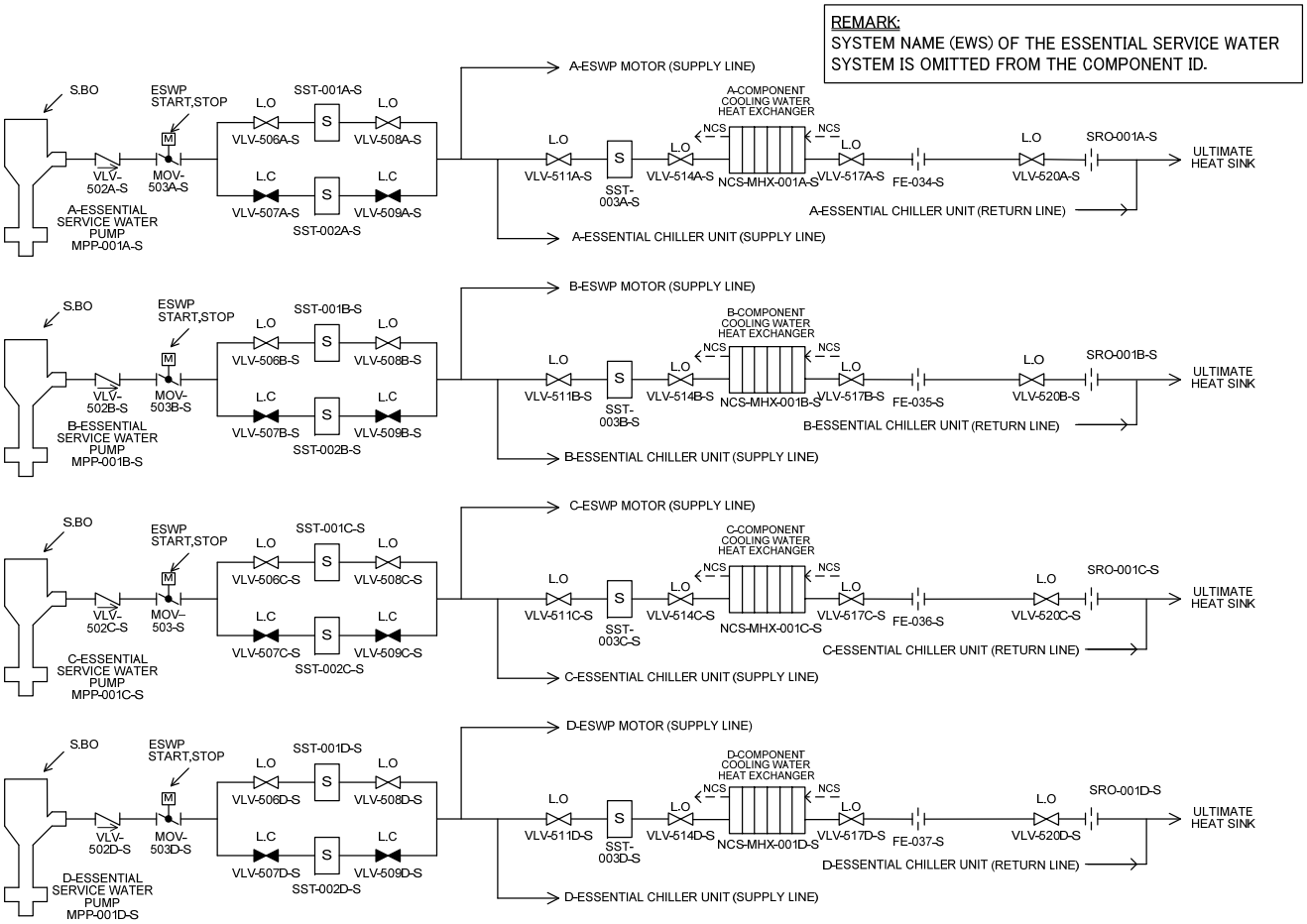

Figure 19.1-2 Simplified System Diagram (Sheet 19 of 42) (Essential Service Water System [1 of 3])

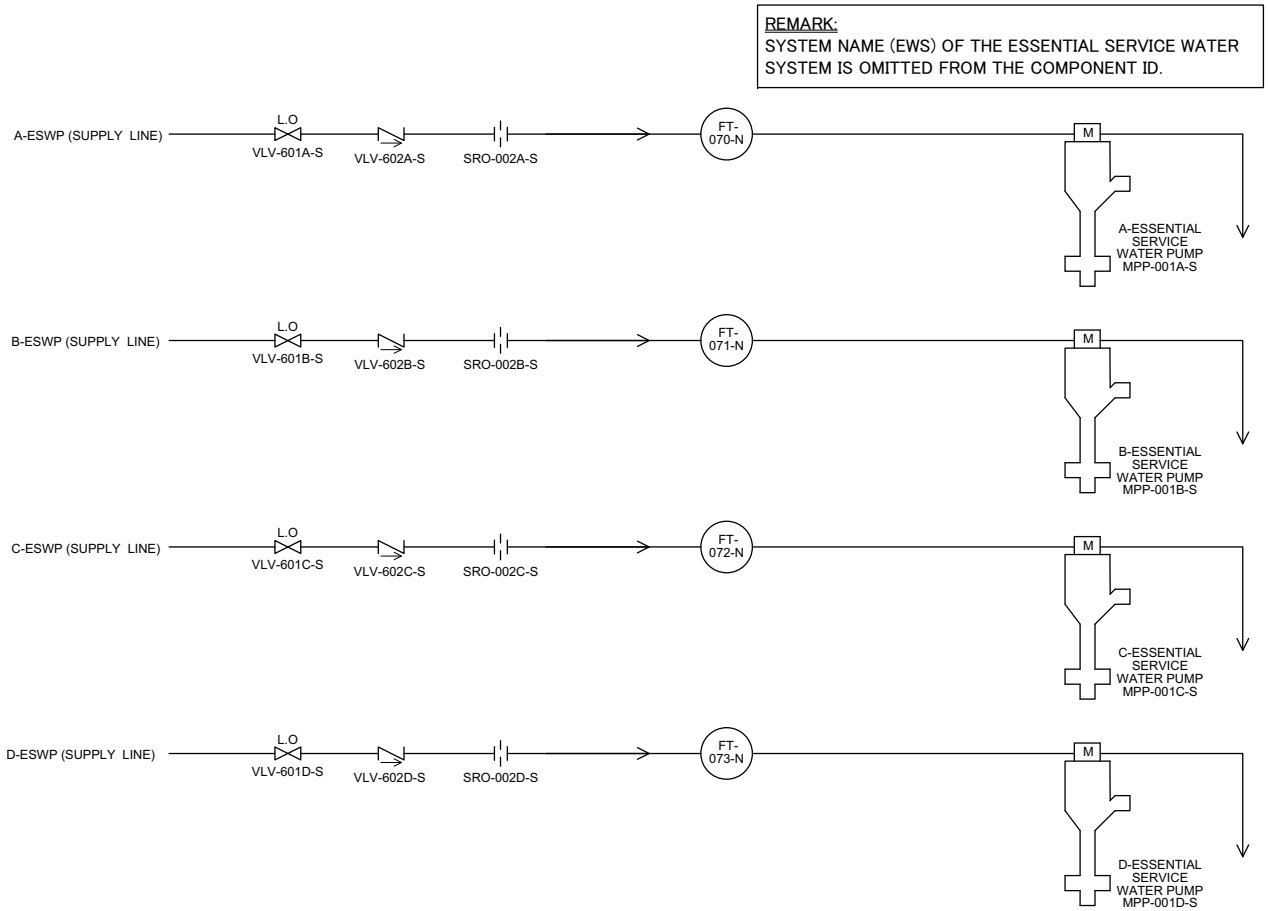

Figure 19.1-2 Simplified System Diagram (Sheet 20 of 42) (Essential Service Water System [2 of 3])

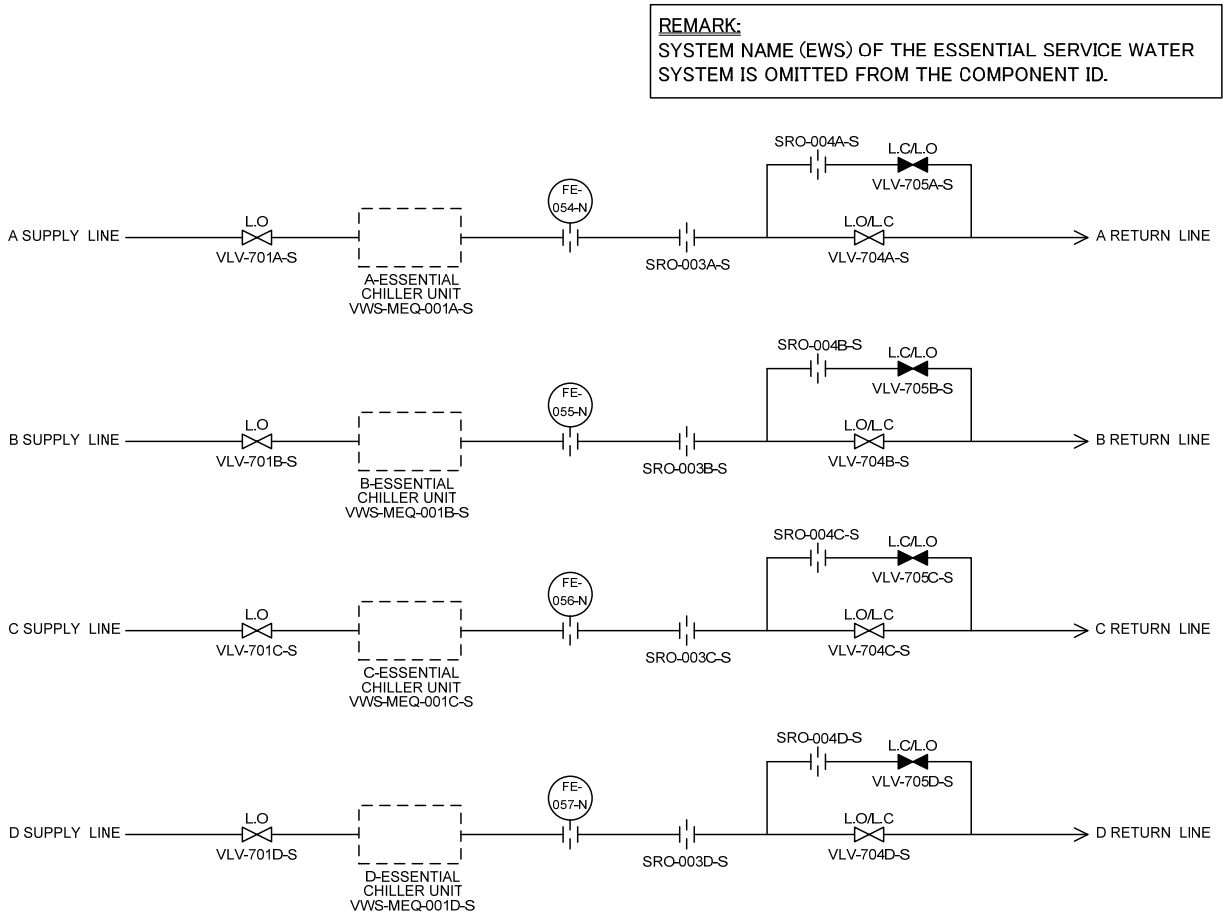

Figure 19.1-2 Simplified System Diagram (Sheet 21 of 42) (Essential Service Water System [3 of 3])

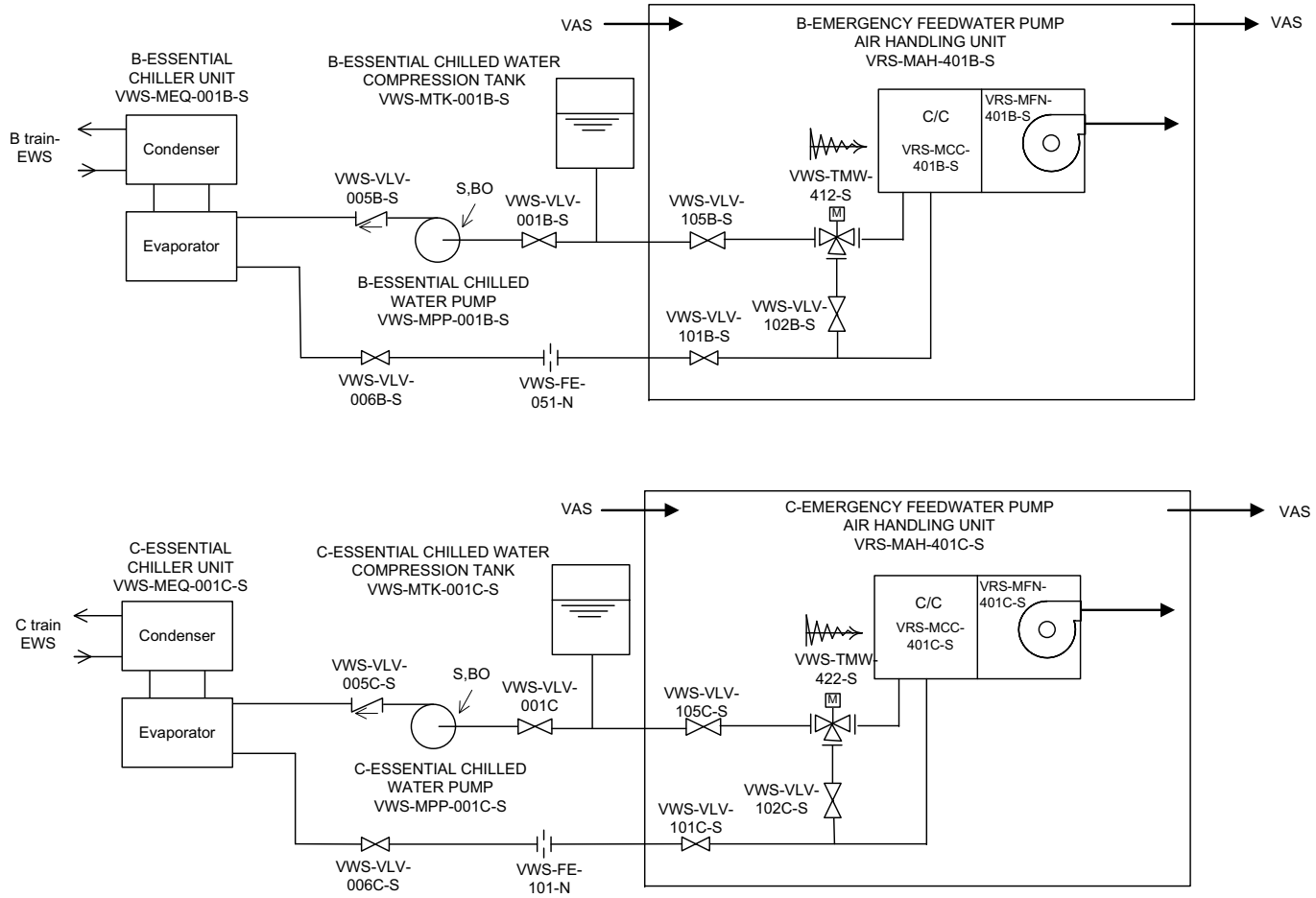

Figure 19.1-2 Simplified System Diagram (Sheet 22 of 42) (Heating, Ventilating and Air Conditioning System)

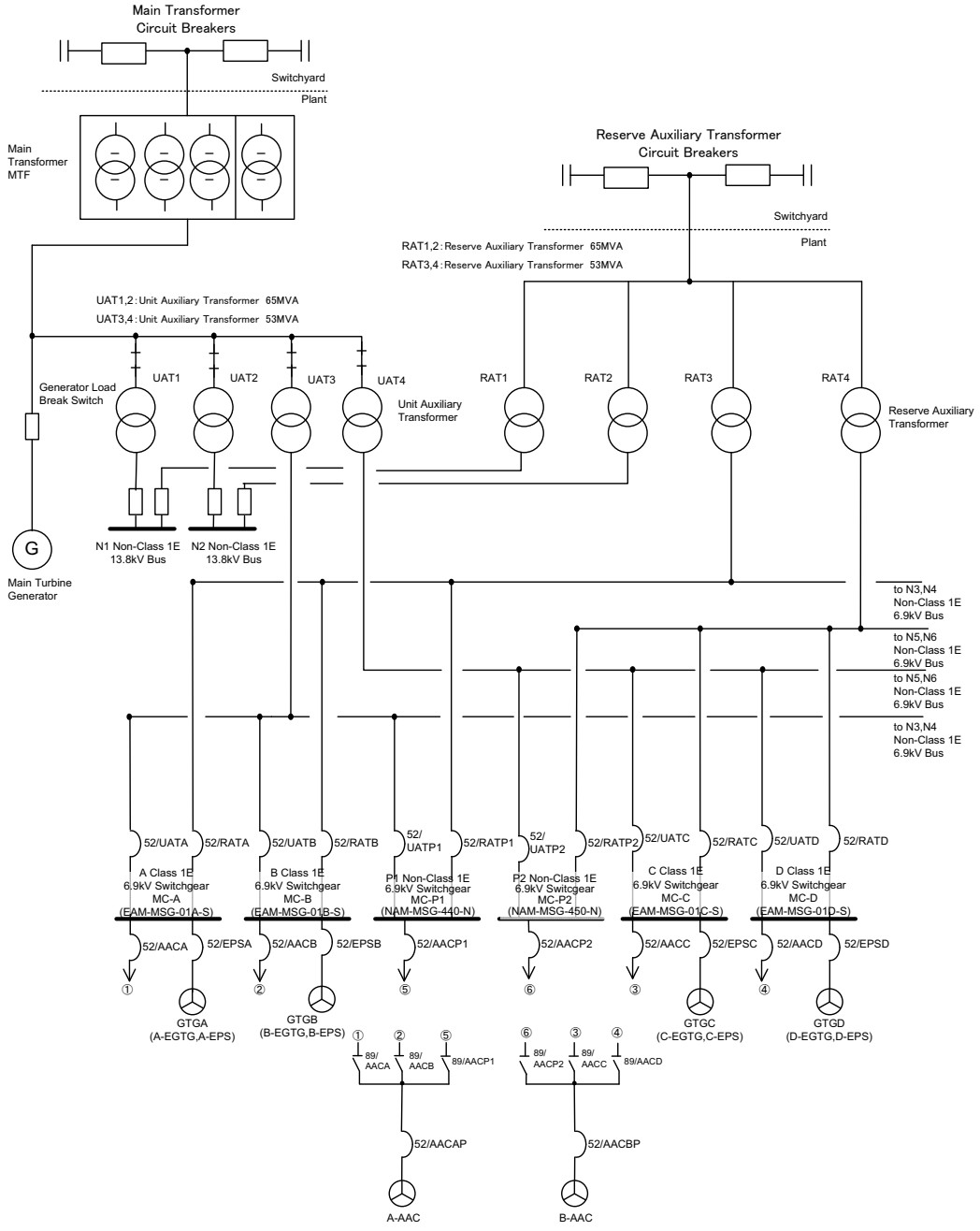

Figure 19.1-2 Simplified System Diagram (Sheet 23 of 42) (Safety System Electric Bus [1 of 2])

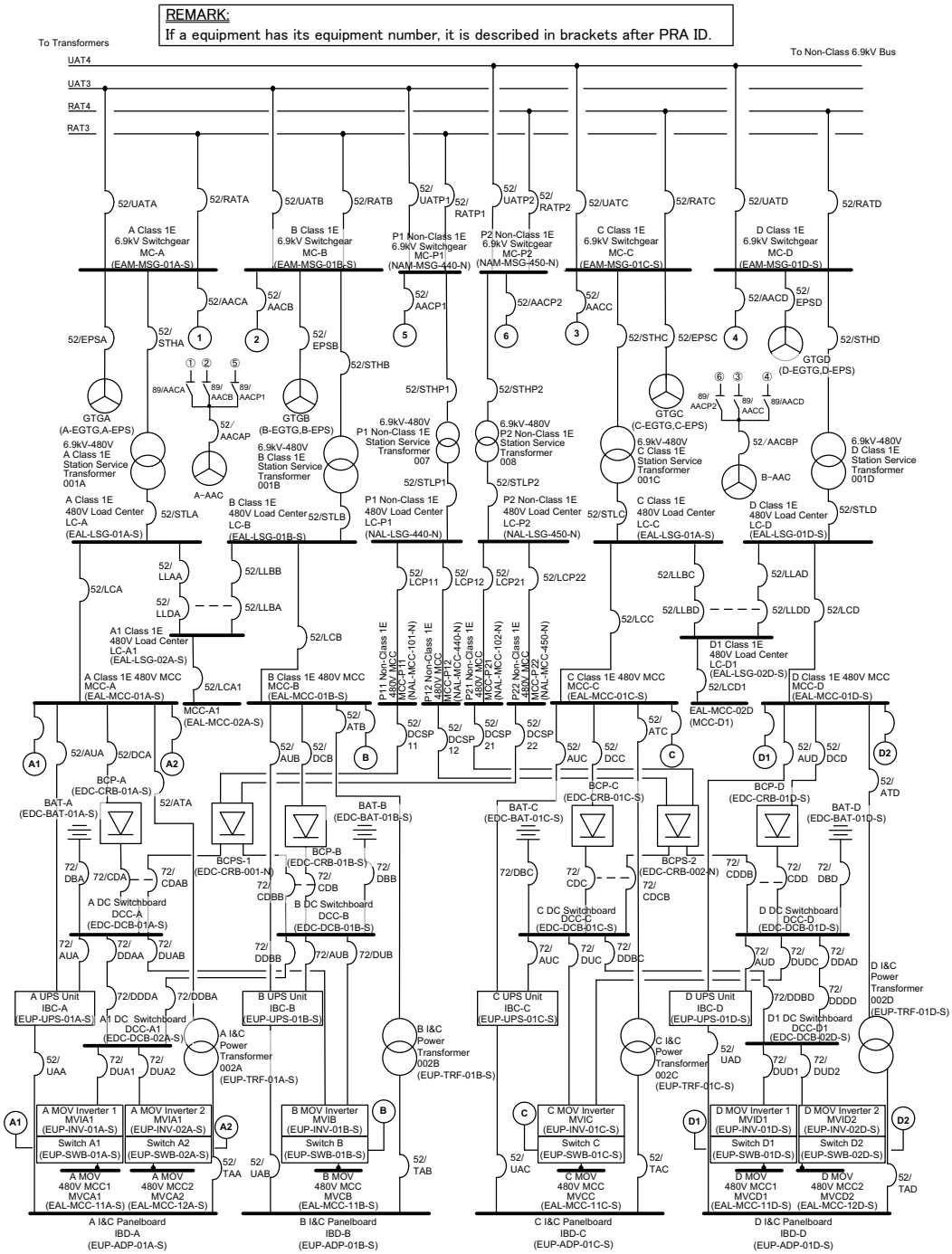

Figure 19.1-2 Simplified System Diagram (Sheet 24 of 42) (Safety System Electric Bus [2 of 2])

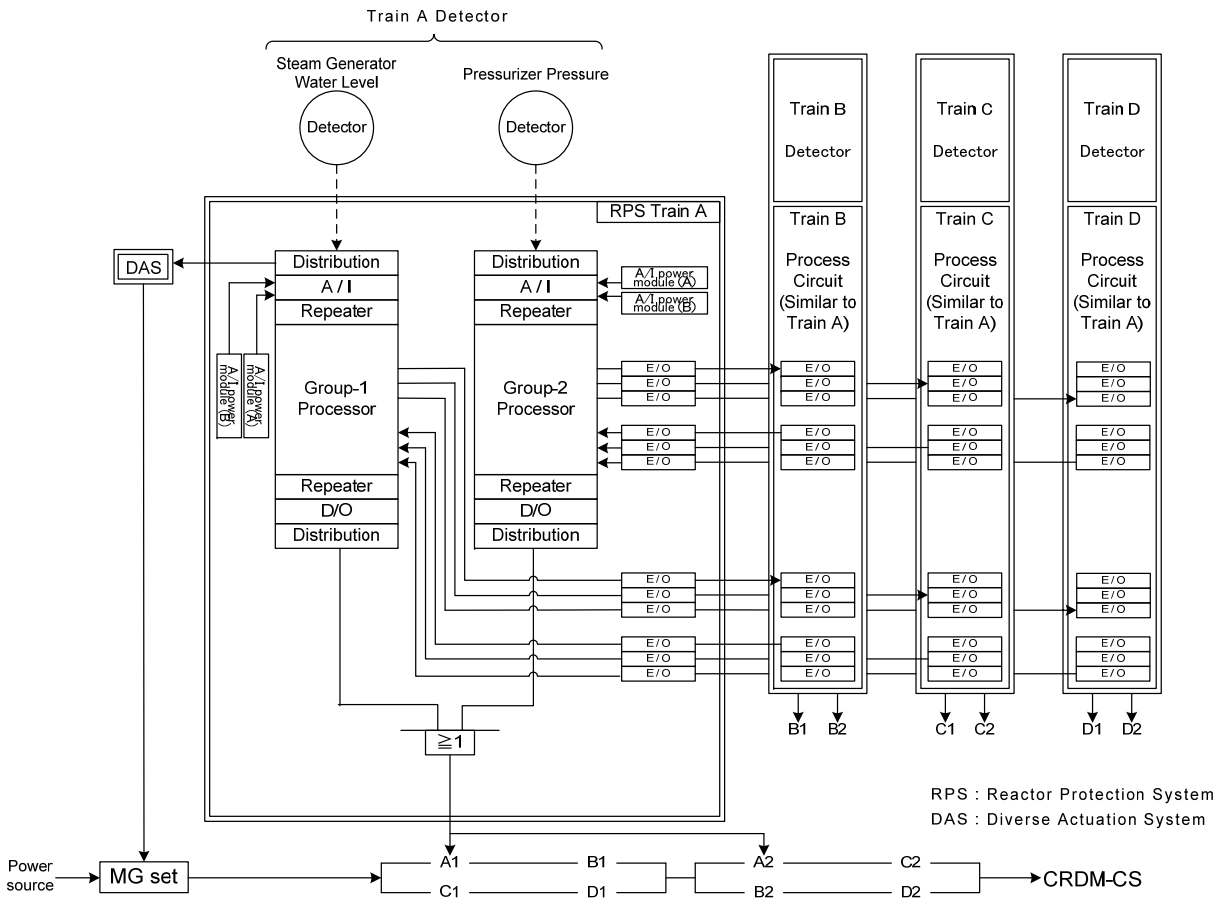

Figure 19.1-2 Simplified System Diagram (Sheet 25 of 42) (Reactor Trip System)

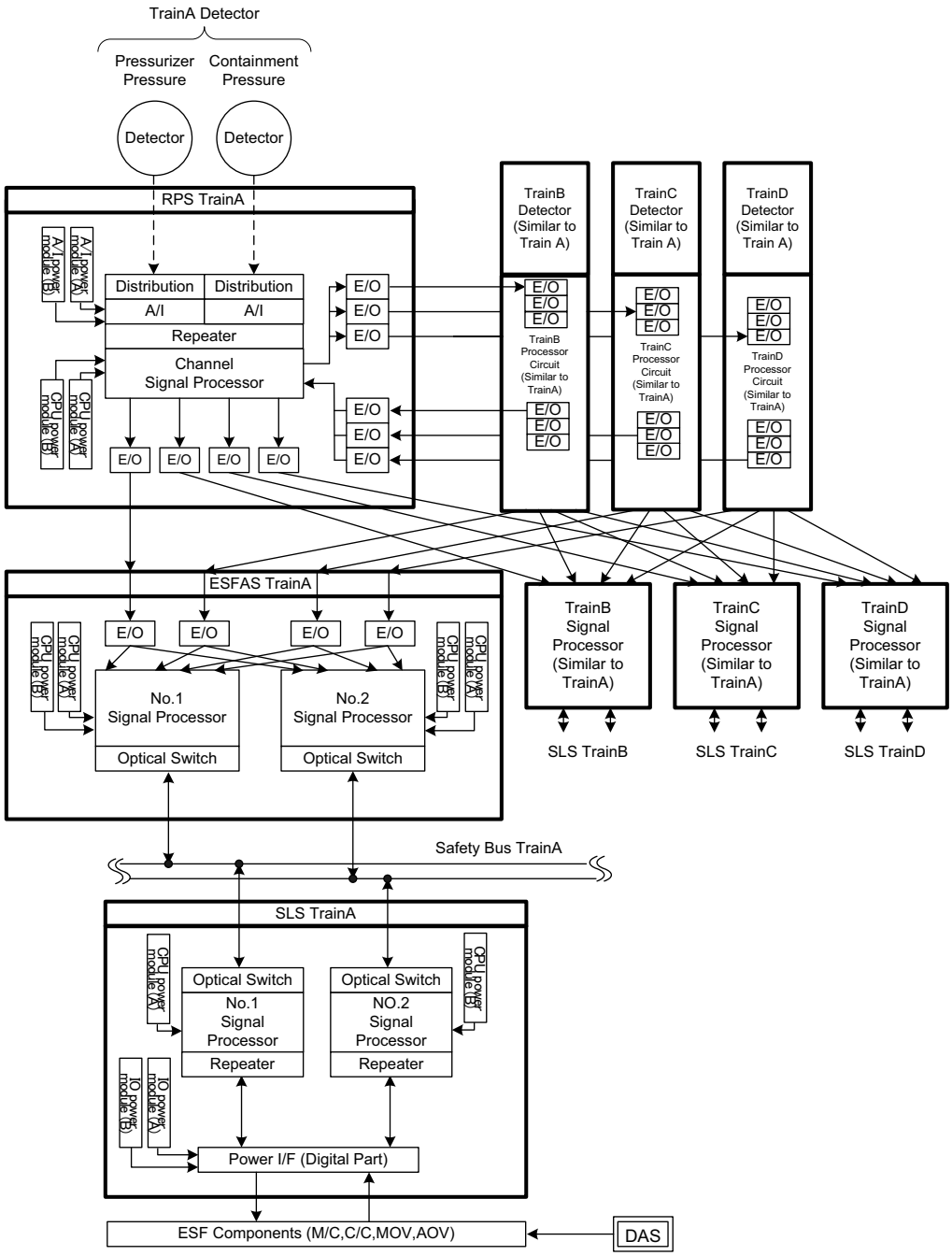

Figure 19.1-2 Simplified System Diagram (Sheet 26 of 42) (ESF System - ECSS Actuation Signals)

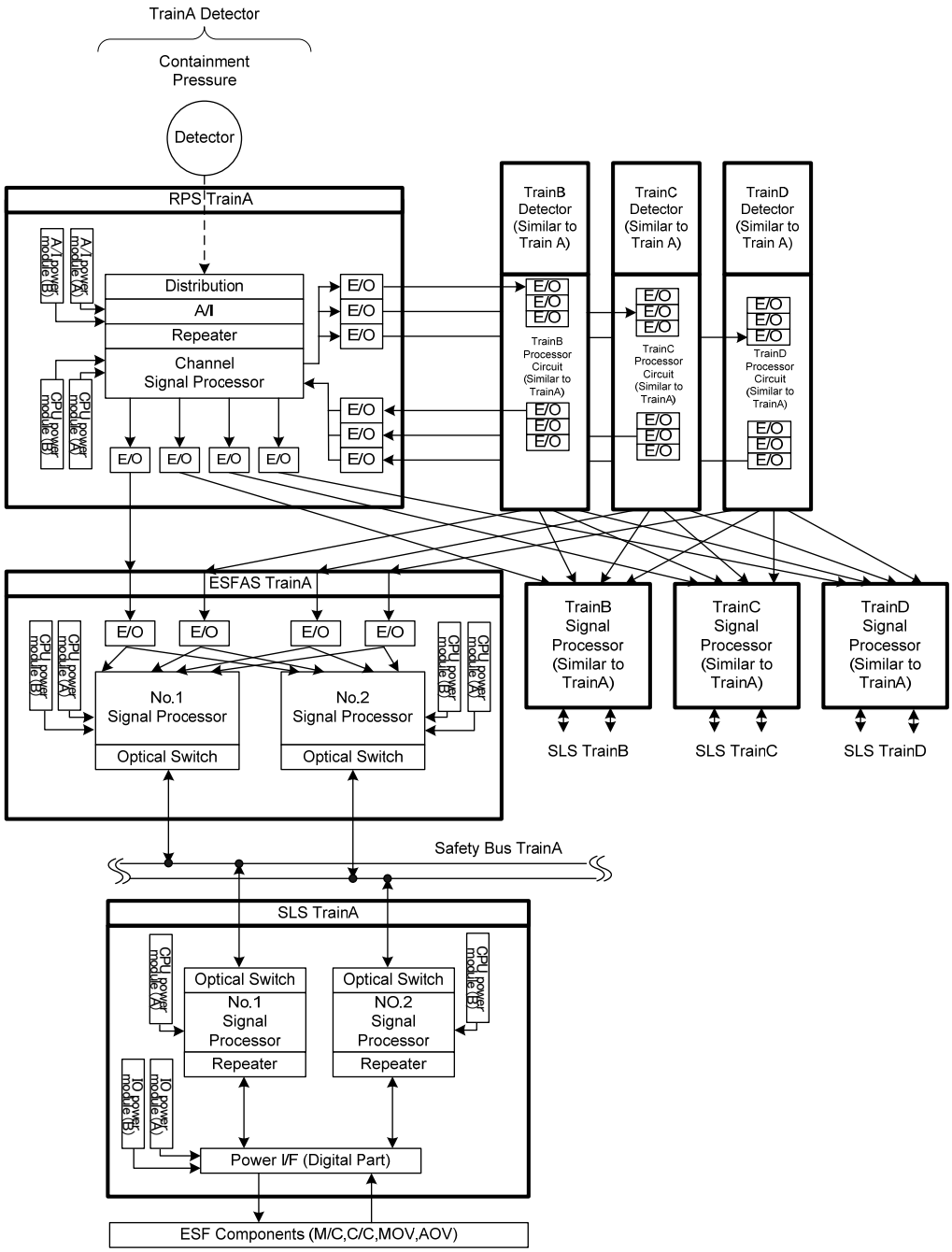

Figure 19.1-2 Simplified System Diagram (Sheet 27 of 42)
(ESF System -Containment Spray Actuation Signals)

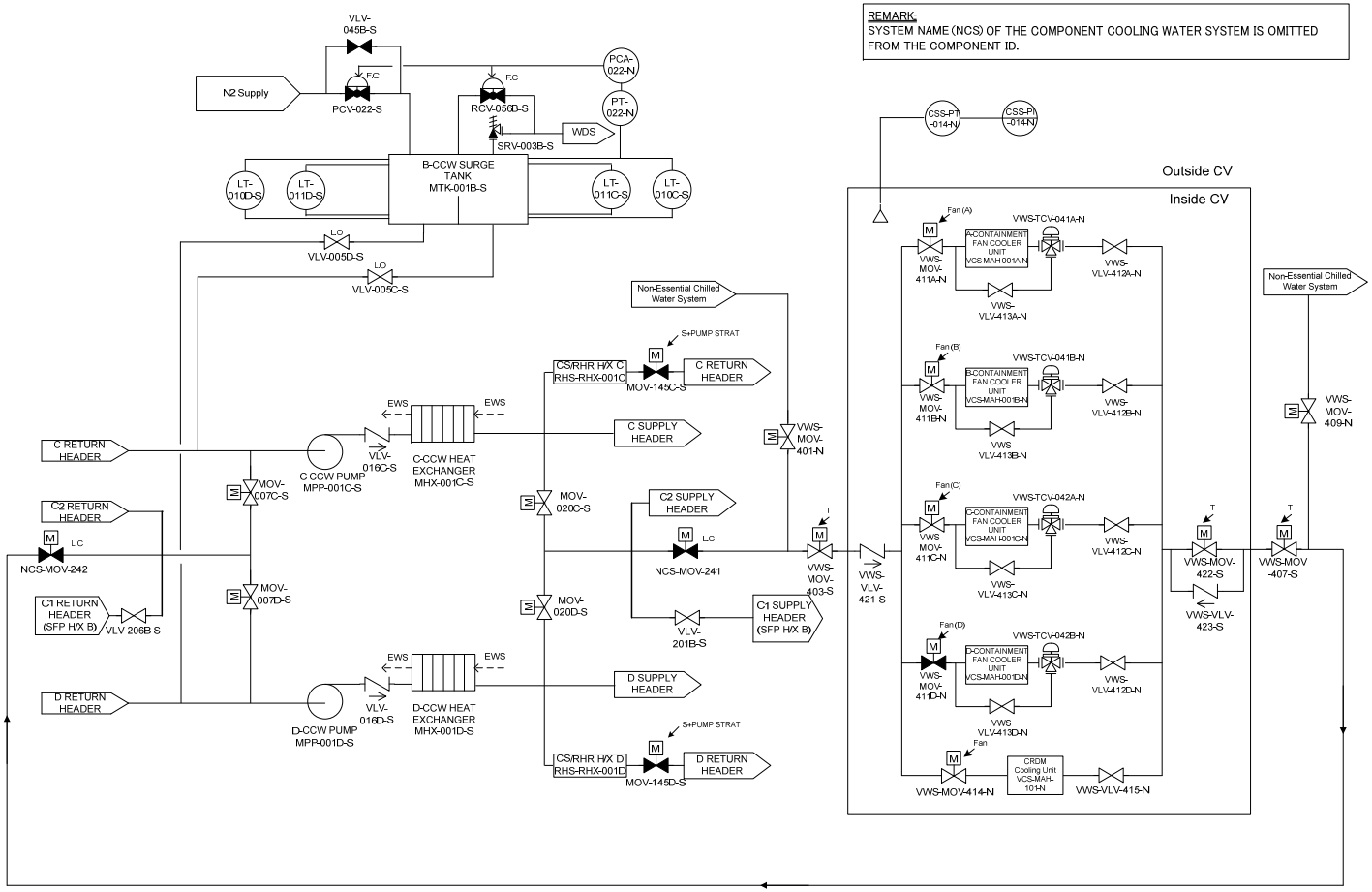

Figure 19.1-2 Simplified System Diagram (Sheet 28 of 42)
(Alternate Containment Cooling by Containment Fan Cooler System - Normal Operation)

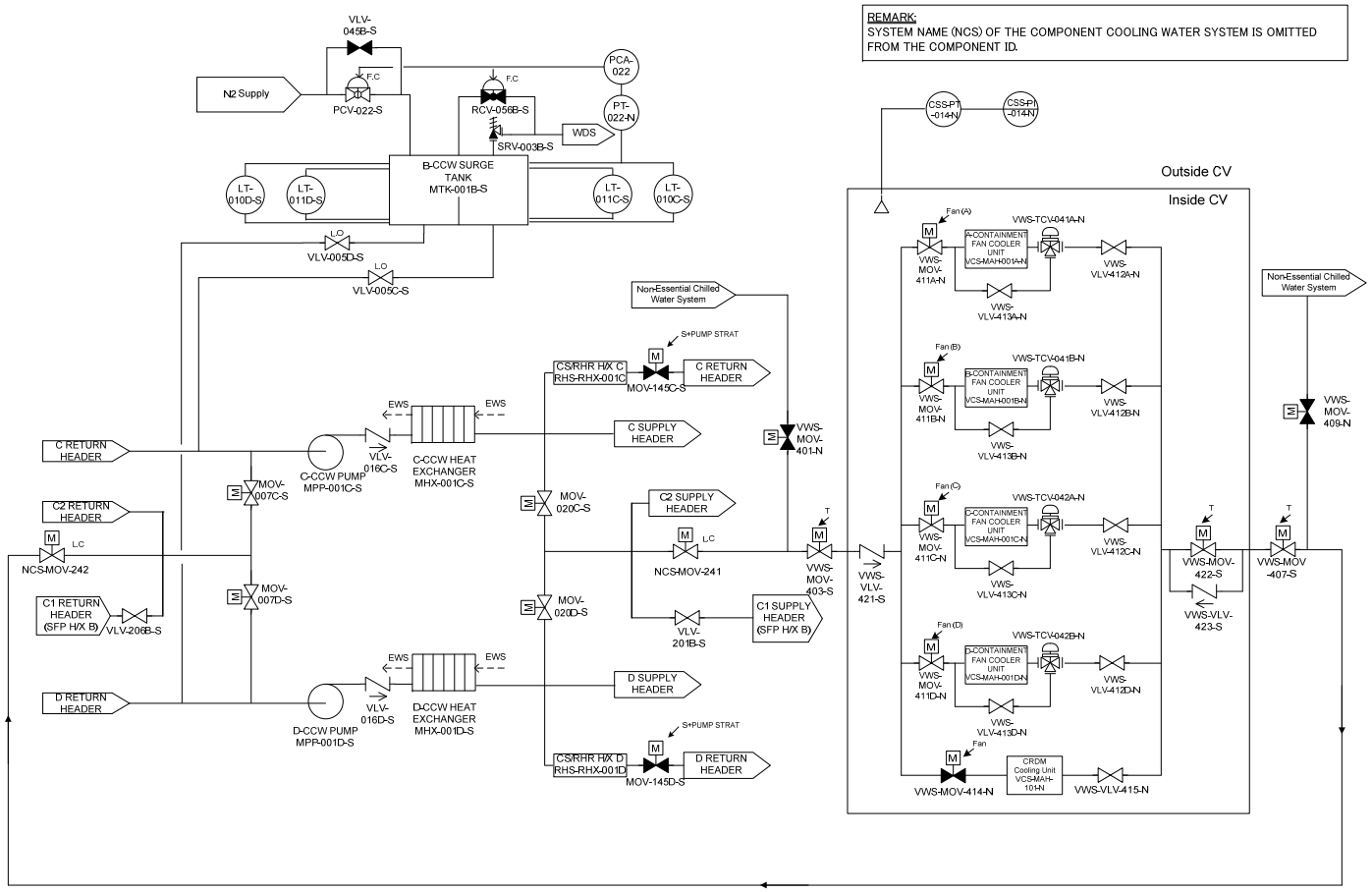

Figure 19.1-2 Simplified System Diagram (Sheet 29 of 42)
(Alternate Containment Cooling by Containment Fan Cooler System - Alternate Containment Cooling Mode)

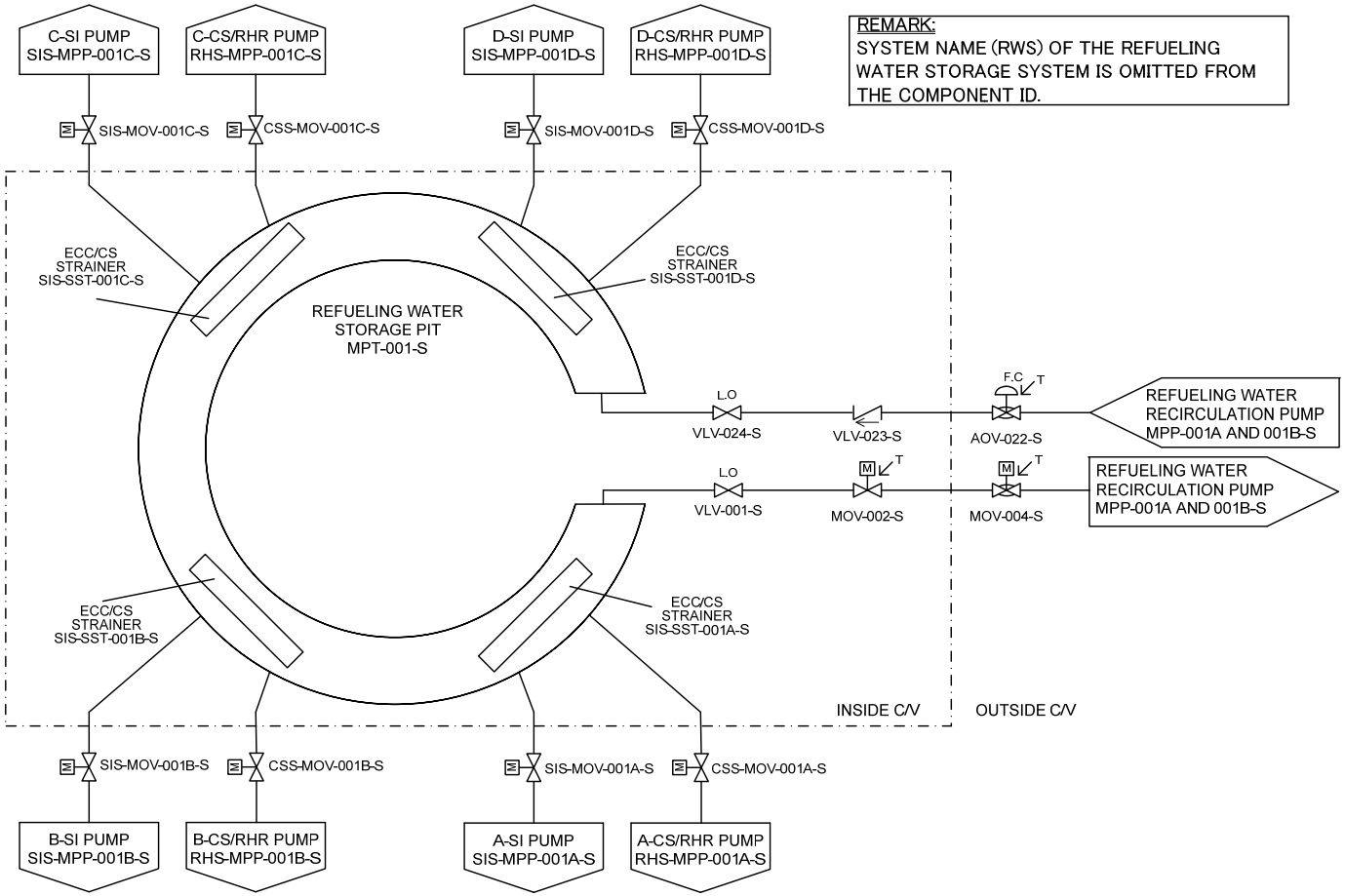

Figure 19.1-2 Simplified System Diagram (Sheet 30 of 42) (Refueling Water Storage Pit) [1of2]

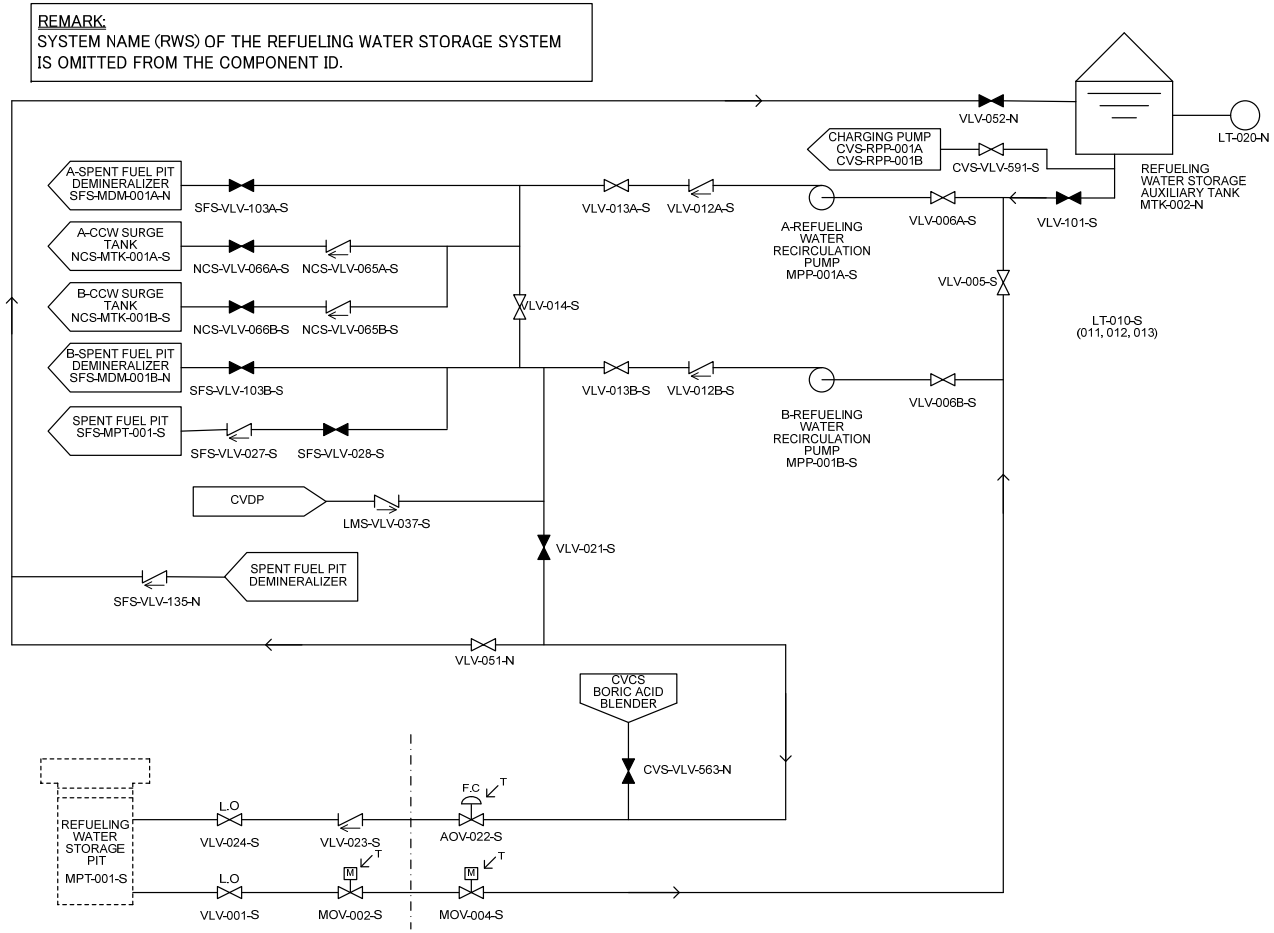

Figure 19.1-2 Simplified System Diagram (Sheet 31 of 42) (Refueling Water Storage Pit) [2of2]

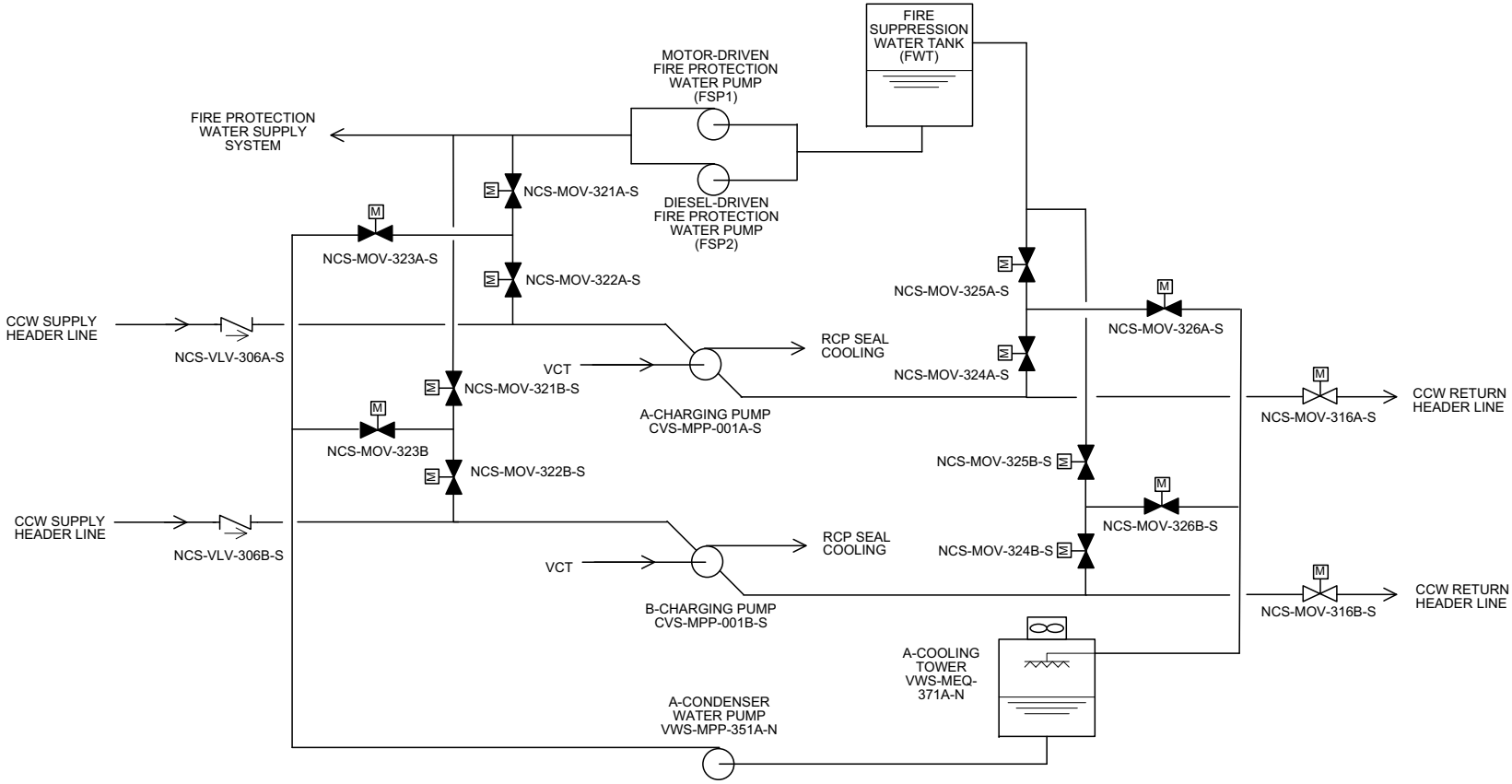

Figure 19.1-2 Simplified System Diagram (Sheet 32 of 42)
(Charging Pump Cooling by CCWS- Normal Operation)

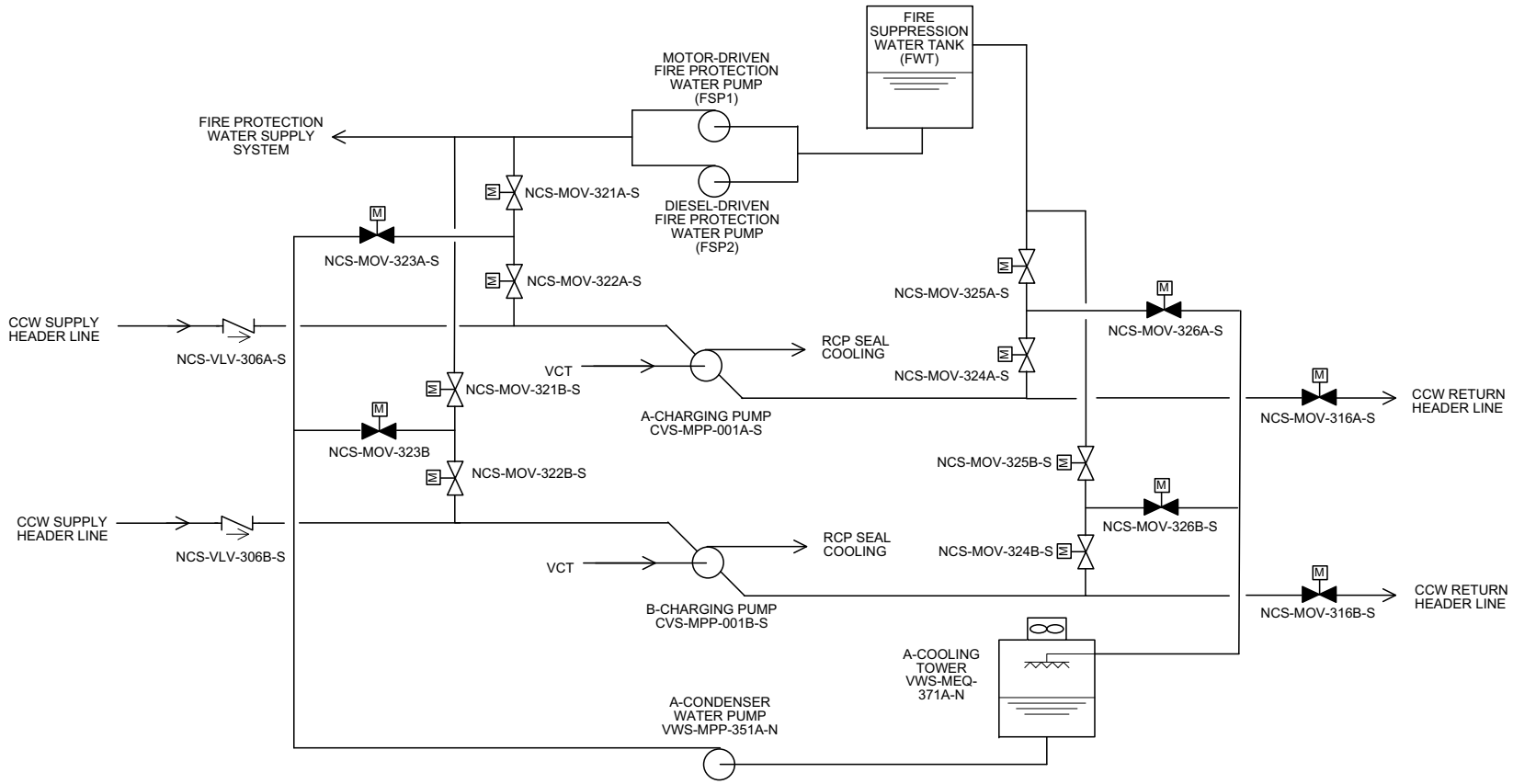

Figure 19.1-2 Simplified System Diagram (Sheet 33 of 42)
(Alternate Component Cooling by Fire Protection Water Supply System)

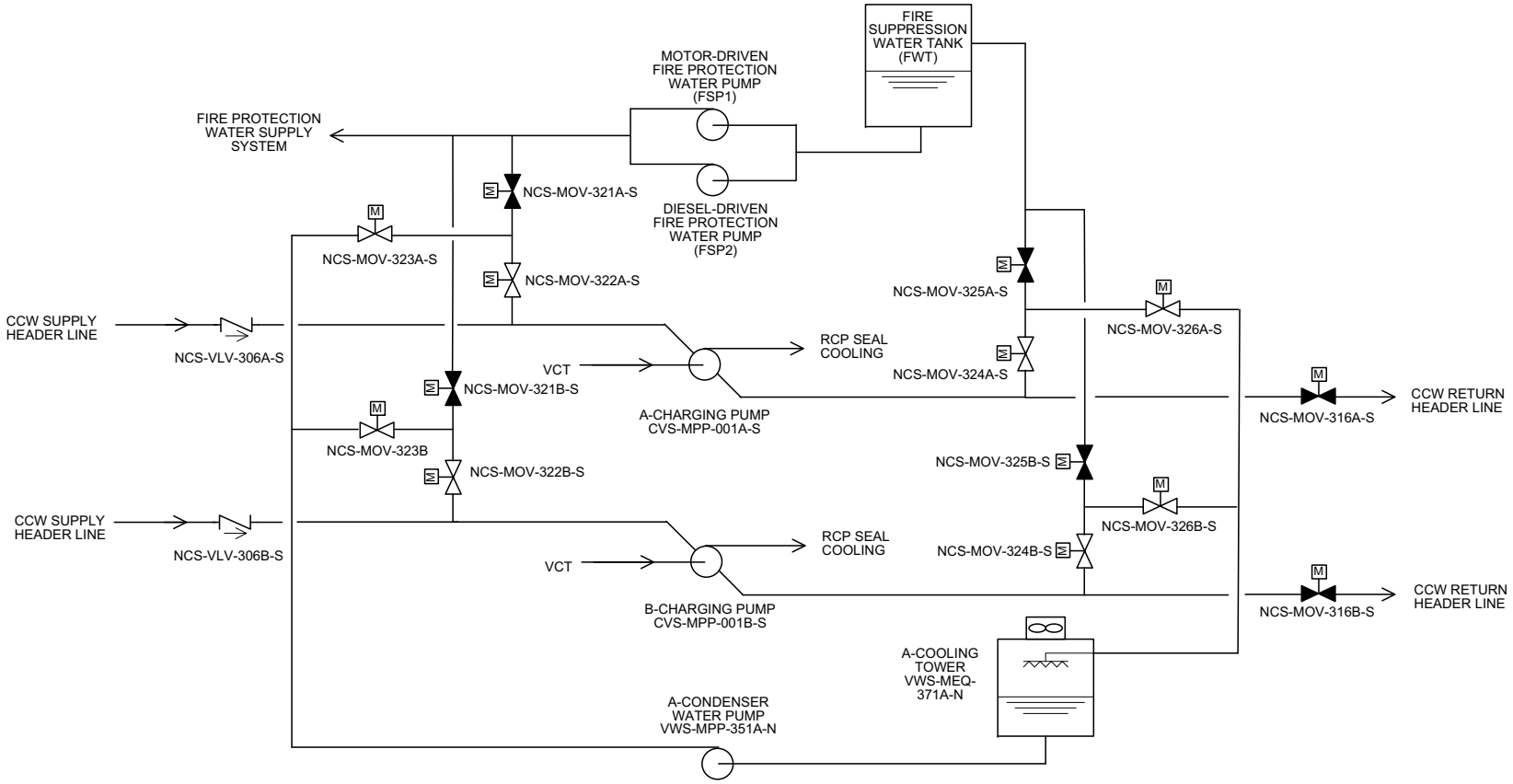

Figure 19.1-2 Simplified System Diagram (Sheet 34 of 42)
(Alternate Component Cooling by Non-essential Chilled Water System)

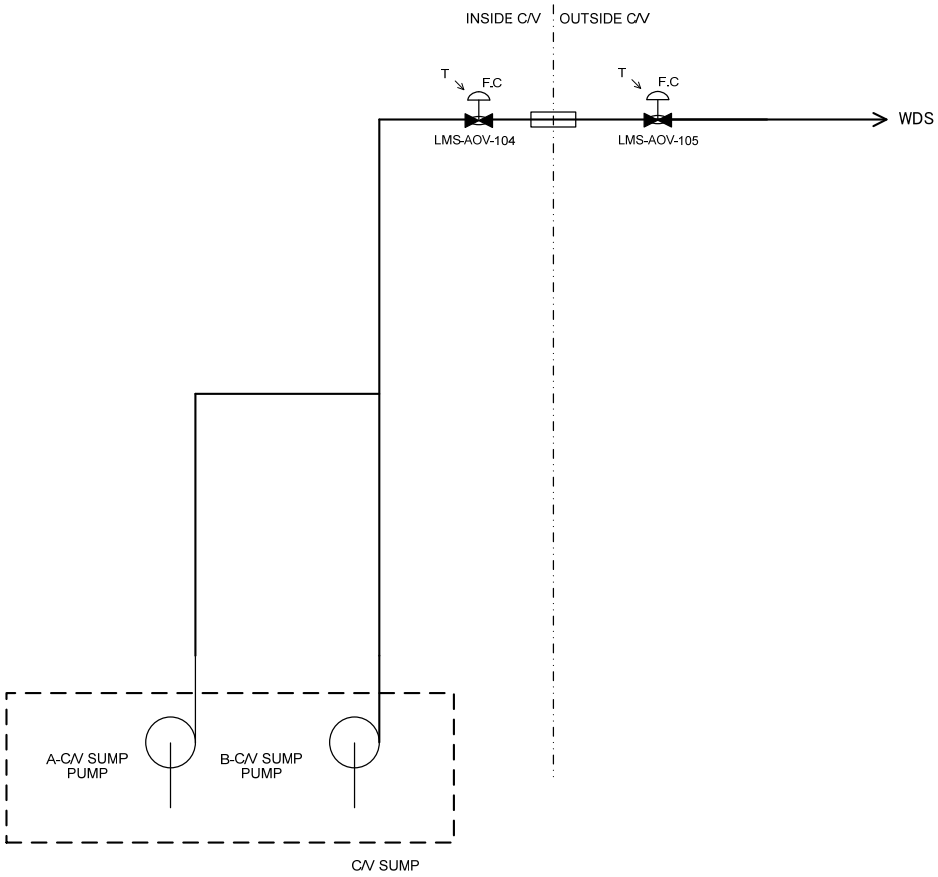

Figure 19.1-2 Simplified System Diagram (Sheet 35 of 42)
(Containment Isolation System - Liquid Waste Management System - C/V Sump Pump Discharge Line)

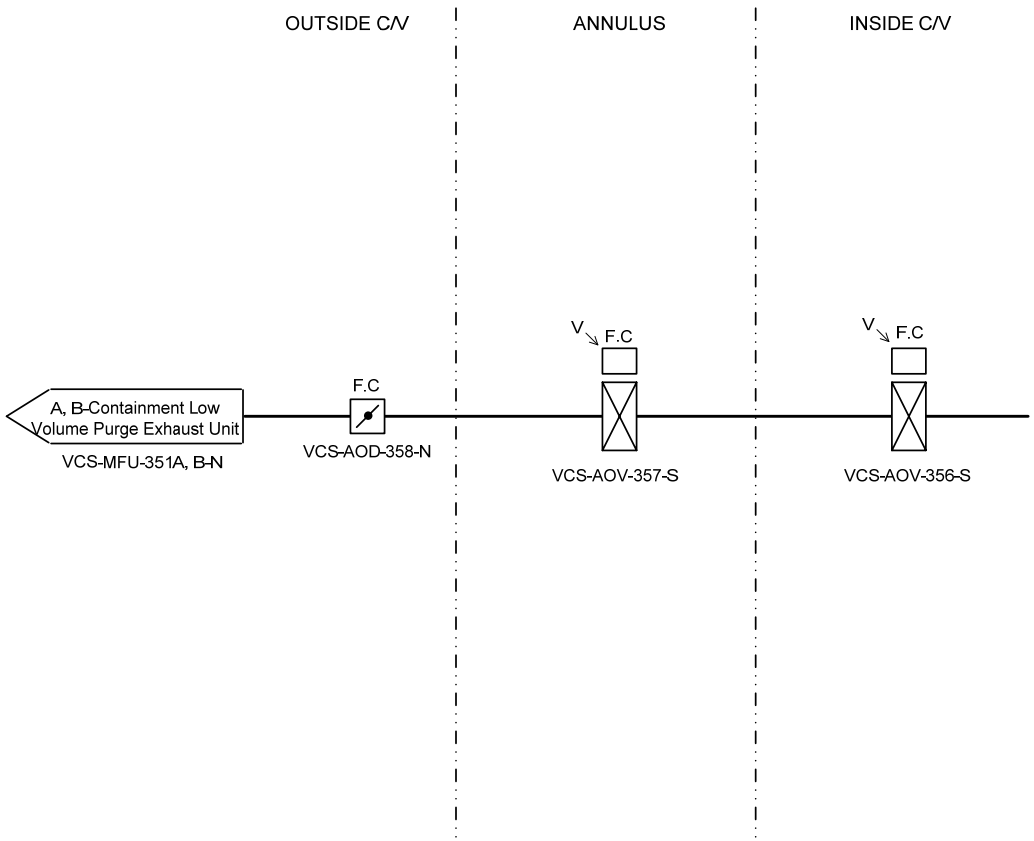

Figure 19.1-2 Simplified System Diagram (Sheet 36 of 42)
(Containment Isolation System - Containment Purge System - Containment Low Volume Purge Exhaust Line)

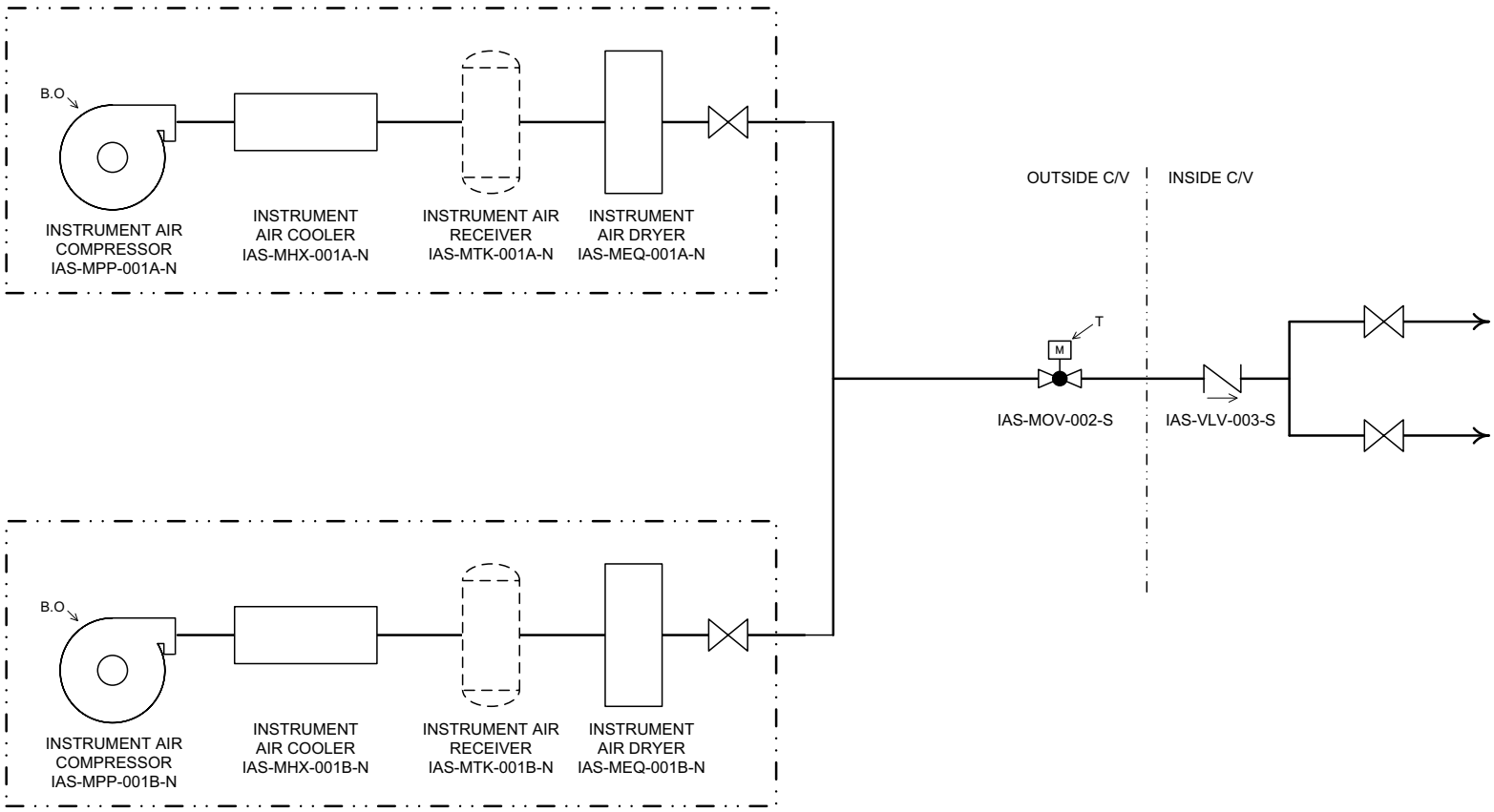

Figure 19.1-2 Simplified System Diagram (Sheet 37 of 42)
(Containment Isolation System - Instrument Air System - Instrument Air Line)

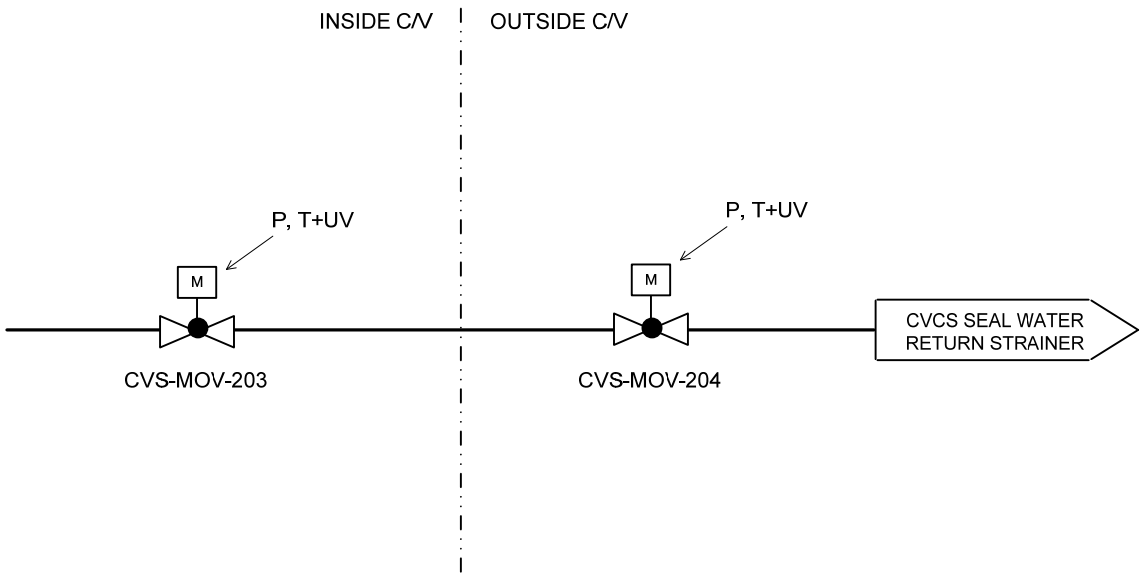

Figure 19.1-2 Simplified System Diagram (Sheet 38 of 42)
(Containment Isolation System - Chemical Volume Control System - Seal Water Return Line)

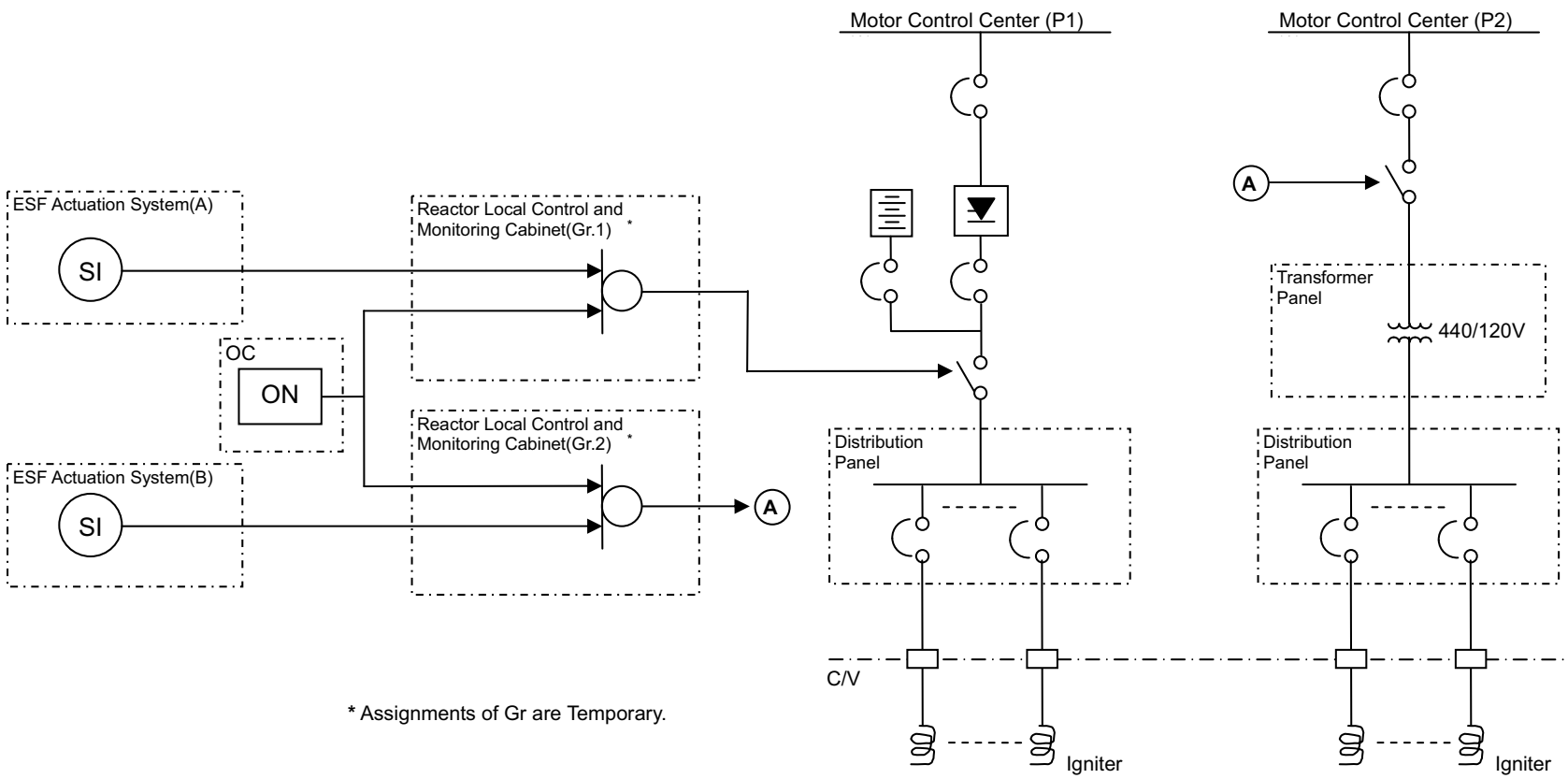

Figure 19.1-2 Simplified System Diagram (Sheet 39 of 42) (Hydrogen Control System)

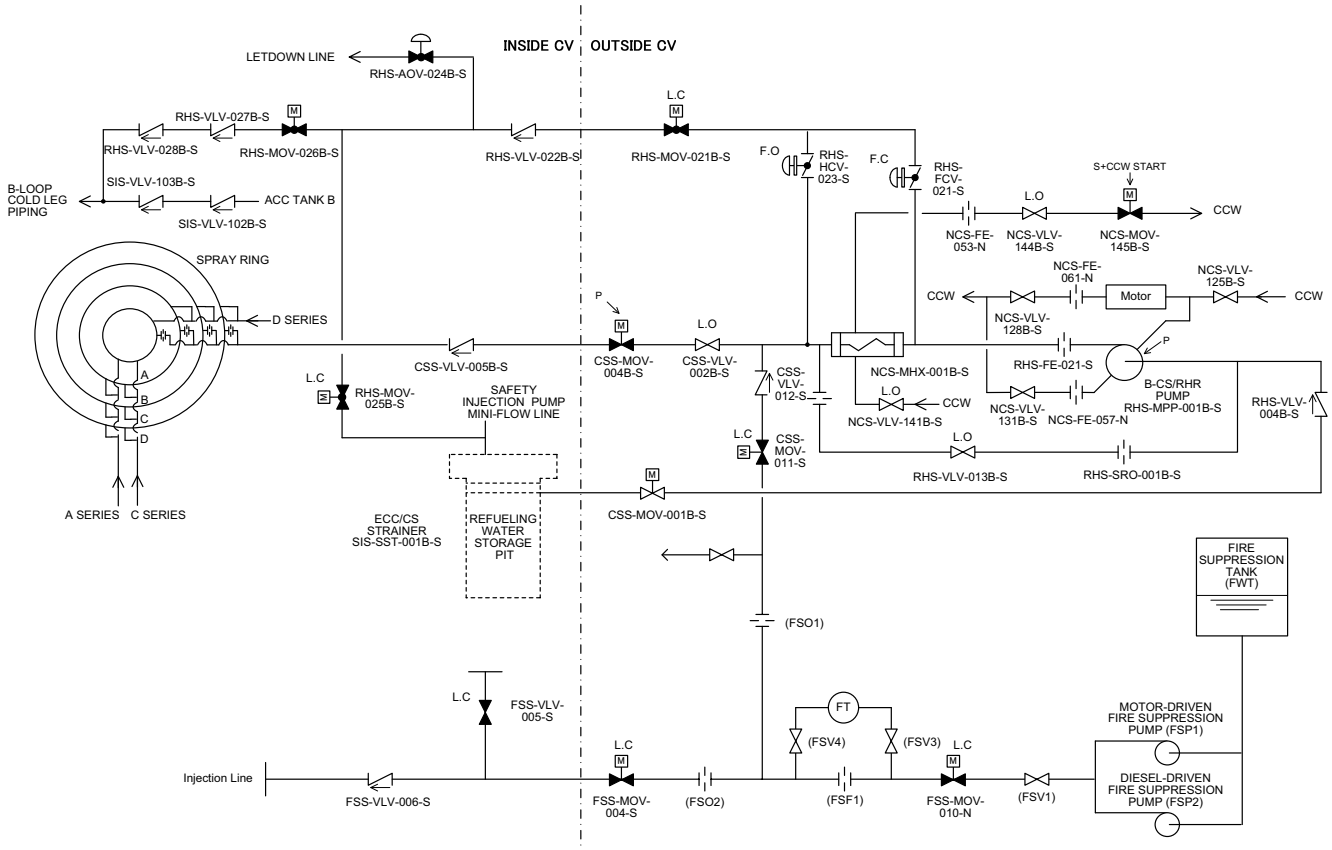

Figure 19.1-2 Simplified System Diagram (Sheet 40 of 42)
(Firewater Injection into the Reactor Cavity and into the Spray Header)

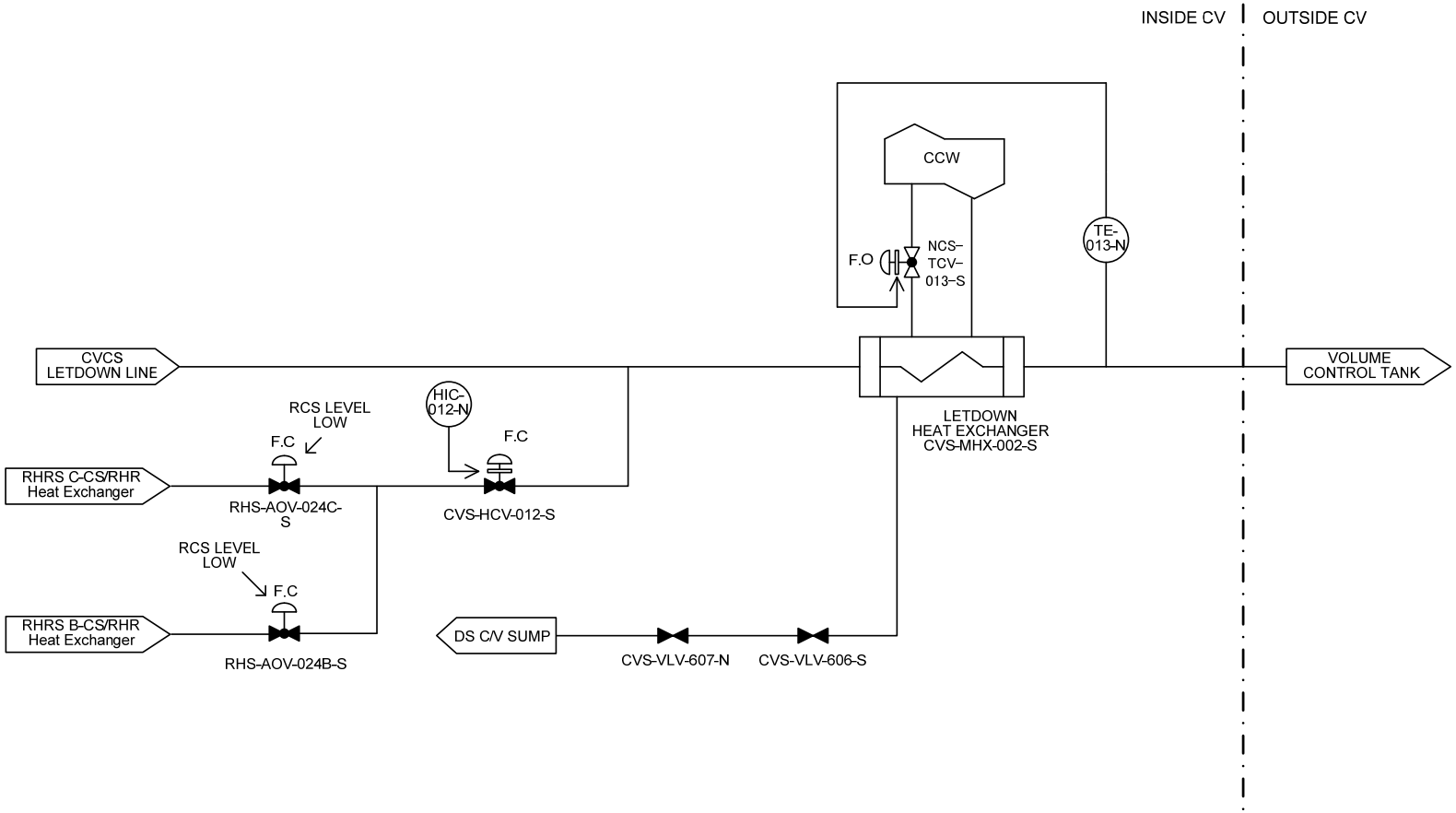

Figure 19.1-2 Simplified System Diagram (Sheet 41 of 42)
(Low-Pressure Letdown Line)

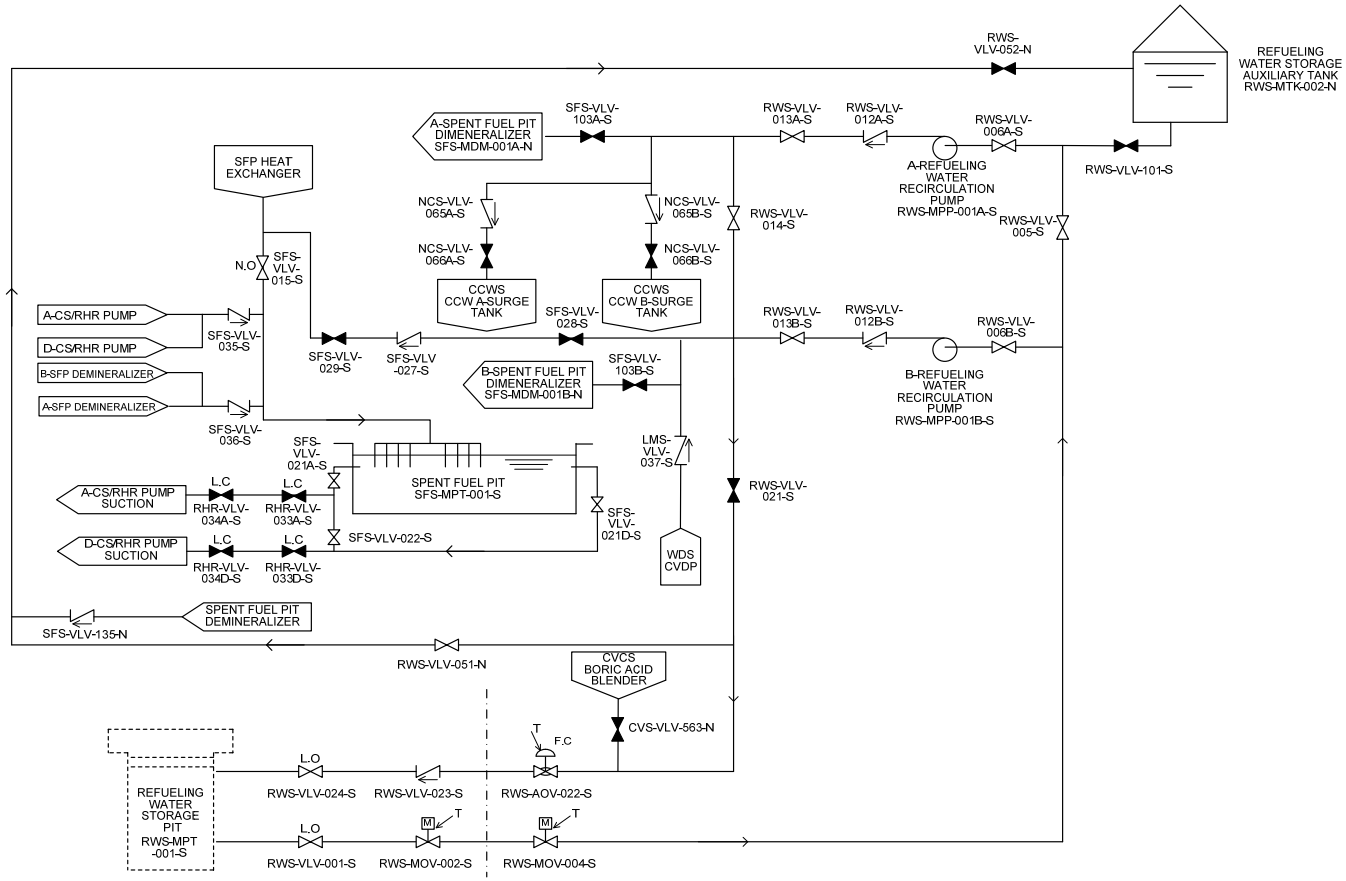

Figure 19.1-2 Simplified System Diagram (Sheet 42 of 42) (Gravity Injection)

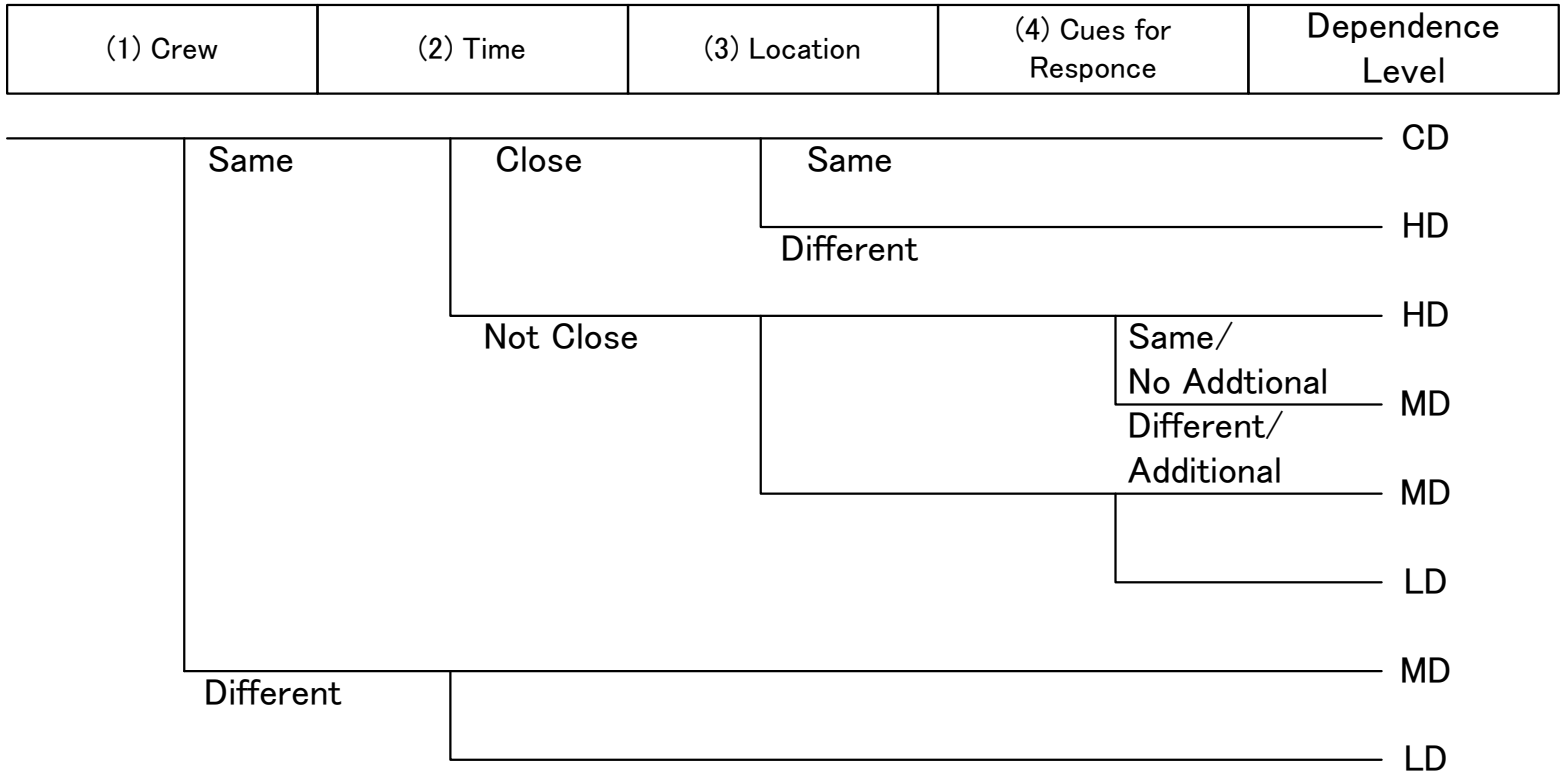

Notes; If this error is 3rd error in the sequence, then the dependency level is at least moderate, if this error is 4th error in the sequence, then the dependency level is at least high, and if this error is more in the sequence, then the dependency level is complete.

Figure 19.1-3 Decision Tree to Determine the Dependency Level between Multiple Human Failure Events

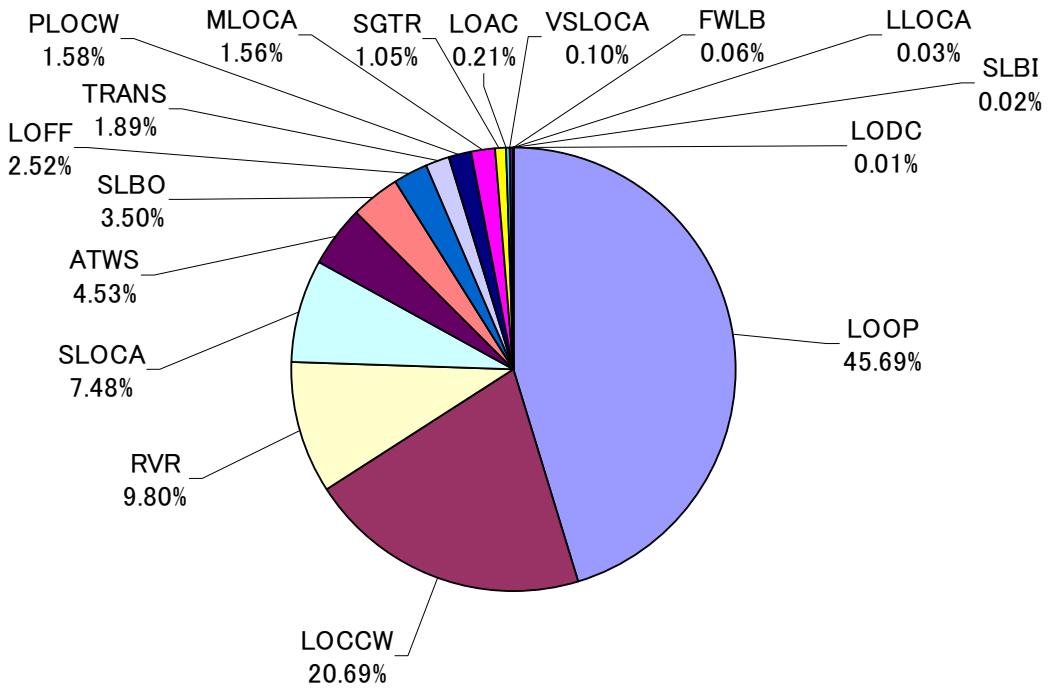

Figure 19.1-4 Internal Events Core Damage Frequency Contribution at Power

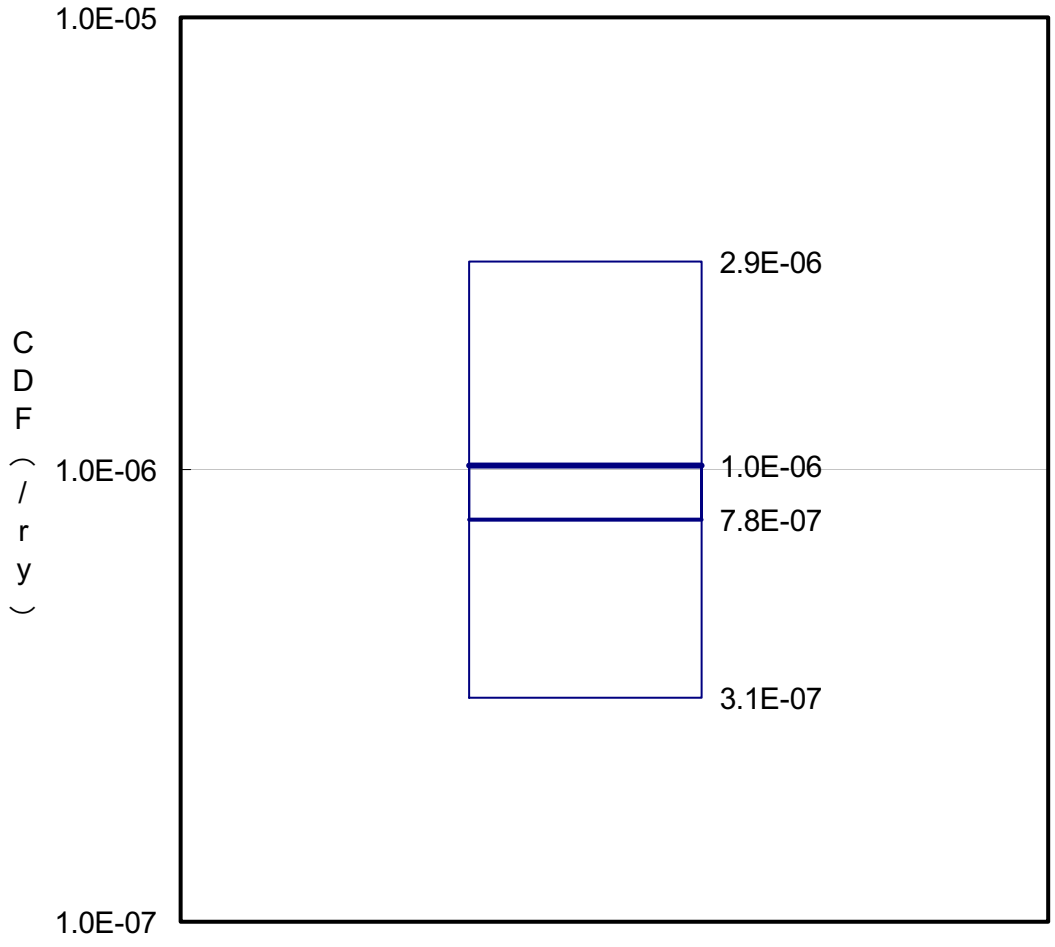

Figure 19.1-5 Result of Uncertainty Quantification for Internal Events at Power

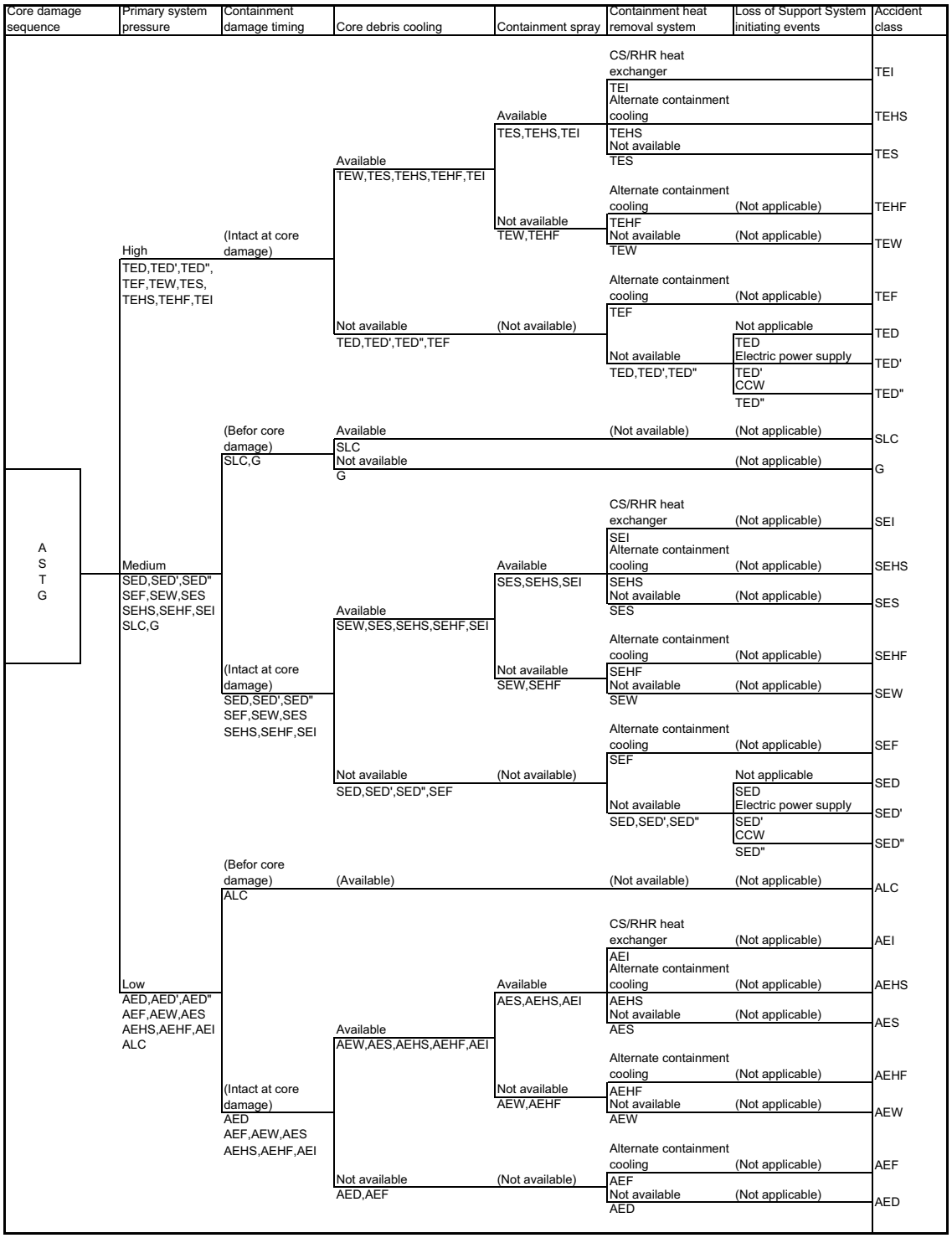

Figure 19.1-6 Logic Tree for ACL Classification

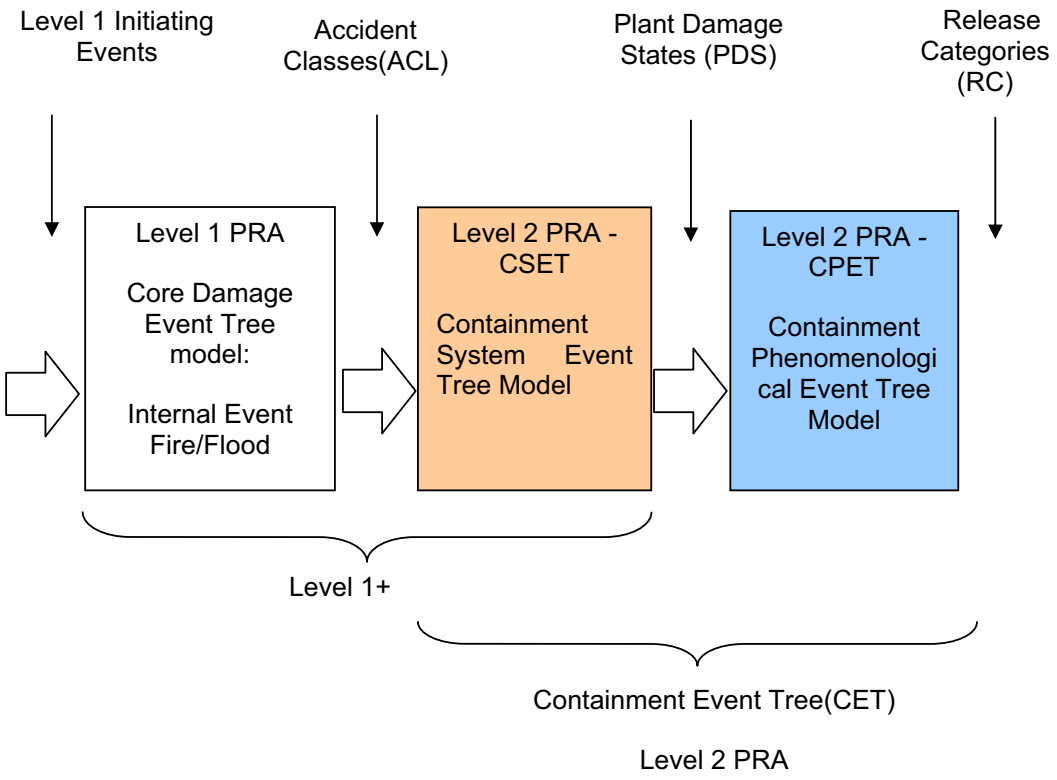

Figure 19.1-7 CET Development Methodology

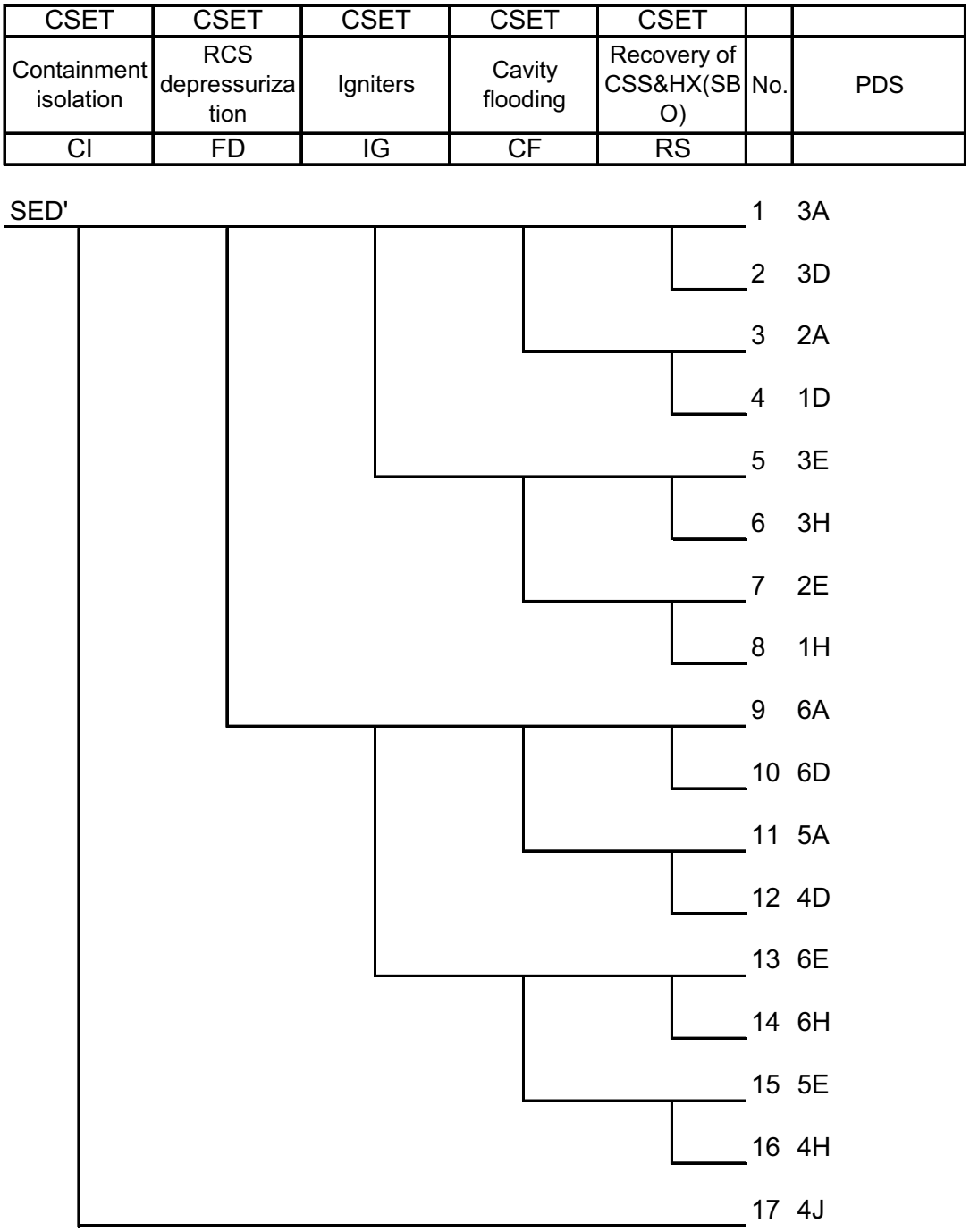

Figure 19.1-8 Containment System Event Tree (Example)

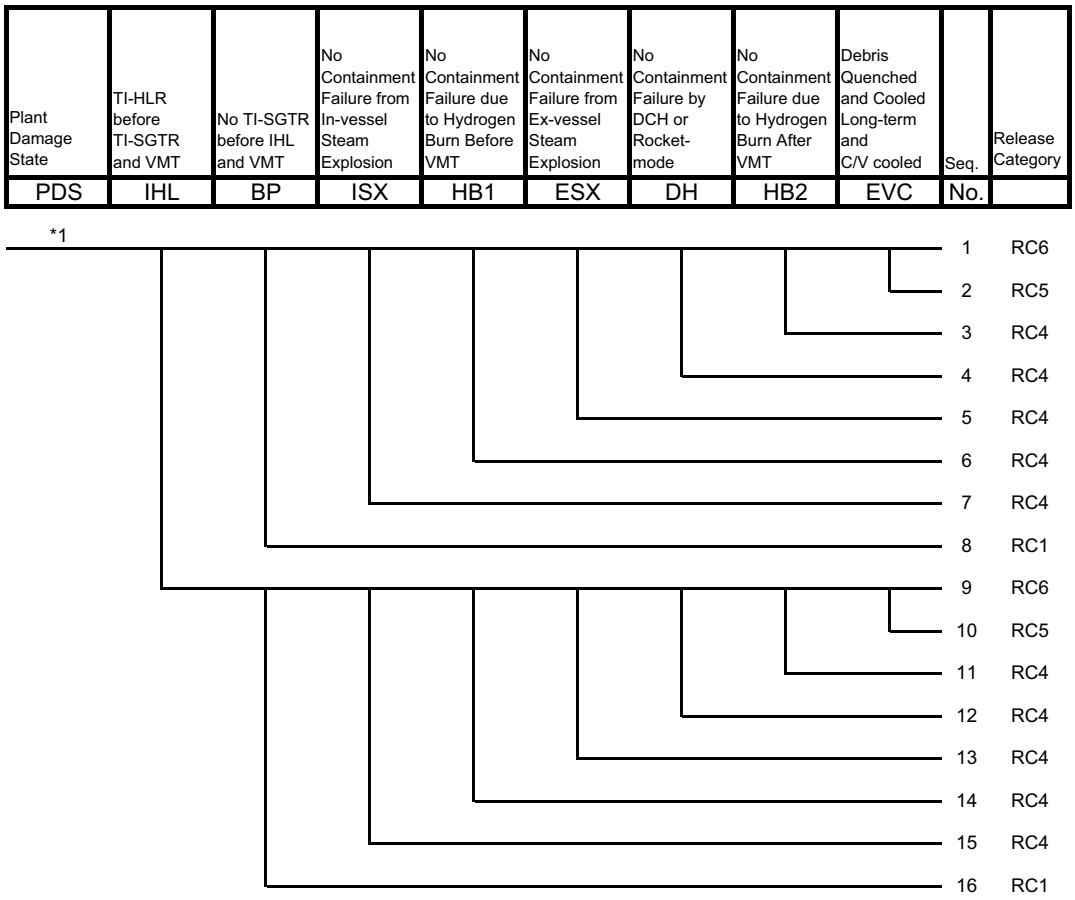

Notes:
Branching → Yes,True ↓ No,False
TI-HLR temperature induced hot leg rupture
VMT vessel melt through
*1 CPET for release categories is developed only PDSs(<1-9><A-H>).
Because all other PDS are directly assigned to release category.

Figure 19.1-9 Containment Phenomenological Event Tree

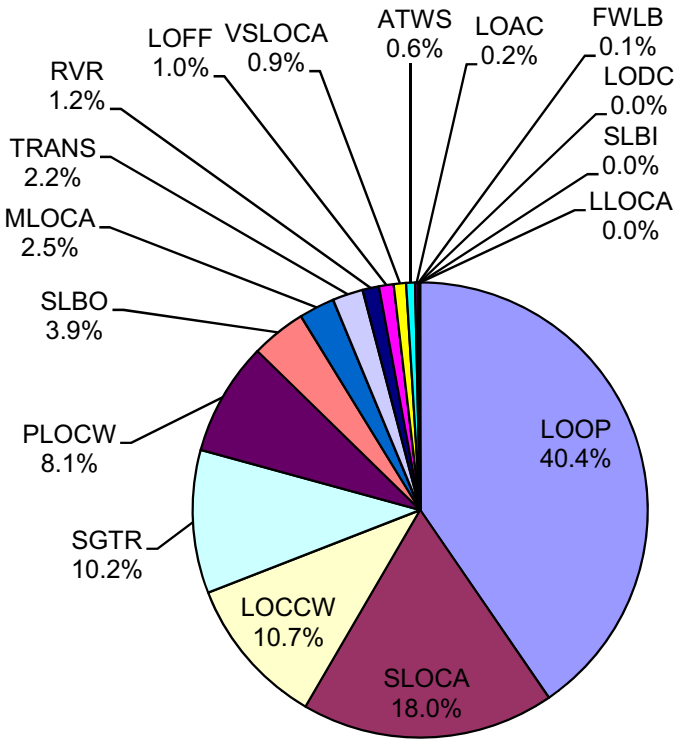

Figure 19.1-10 Contribution of Initiating Events to LRF

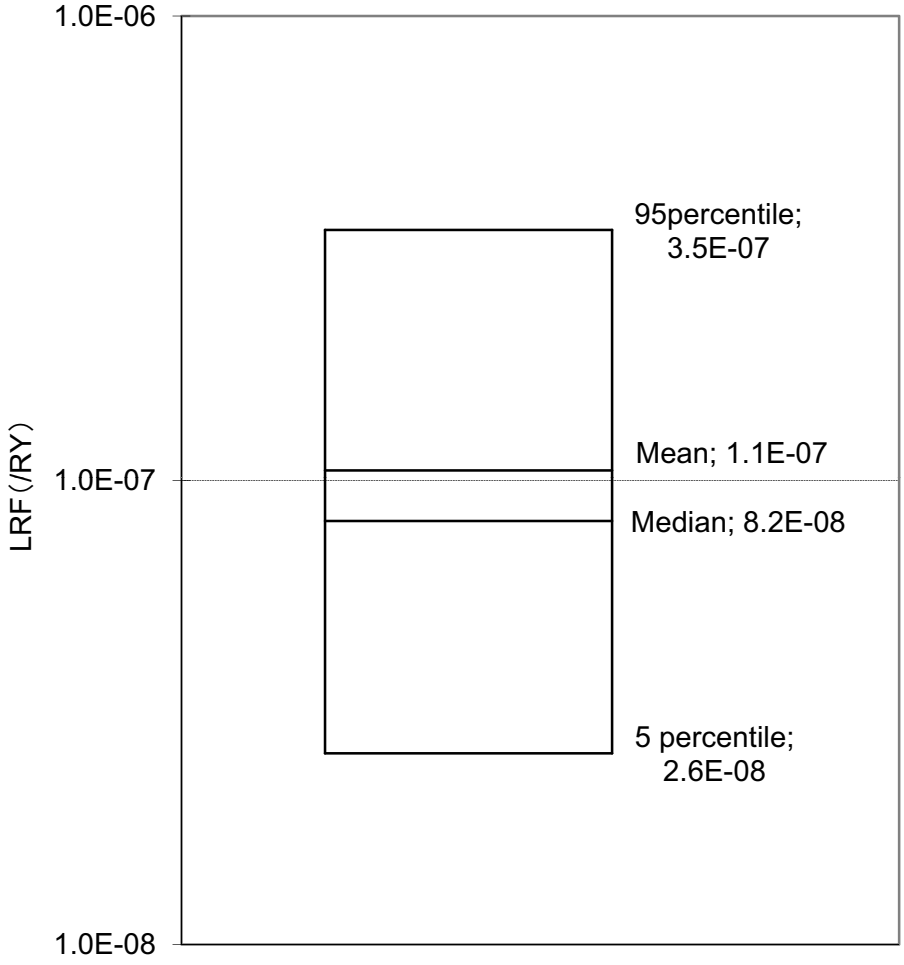

Figure 19.1-11 Result of Parametric Uncertainty for LRF

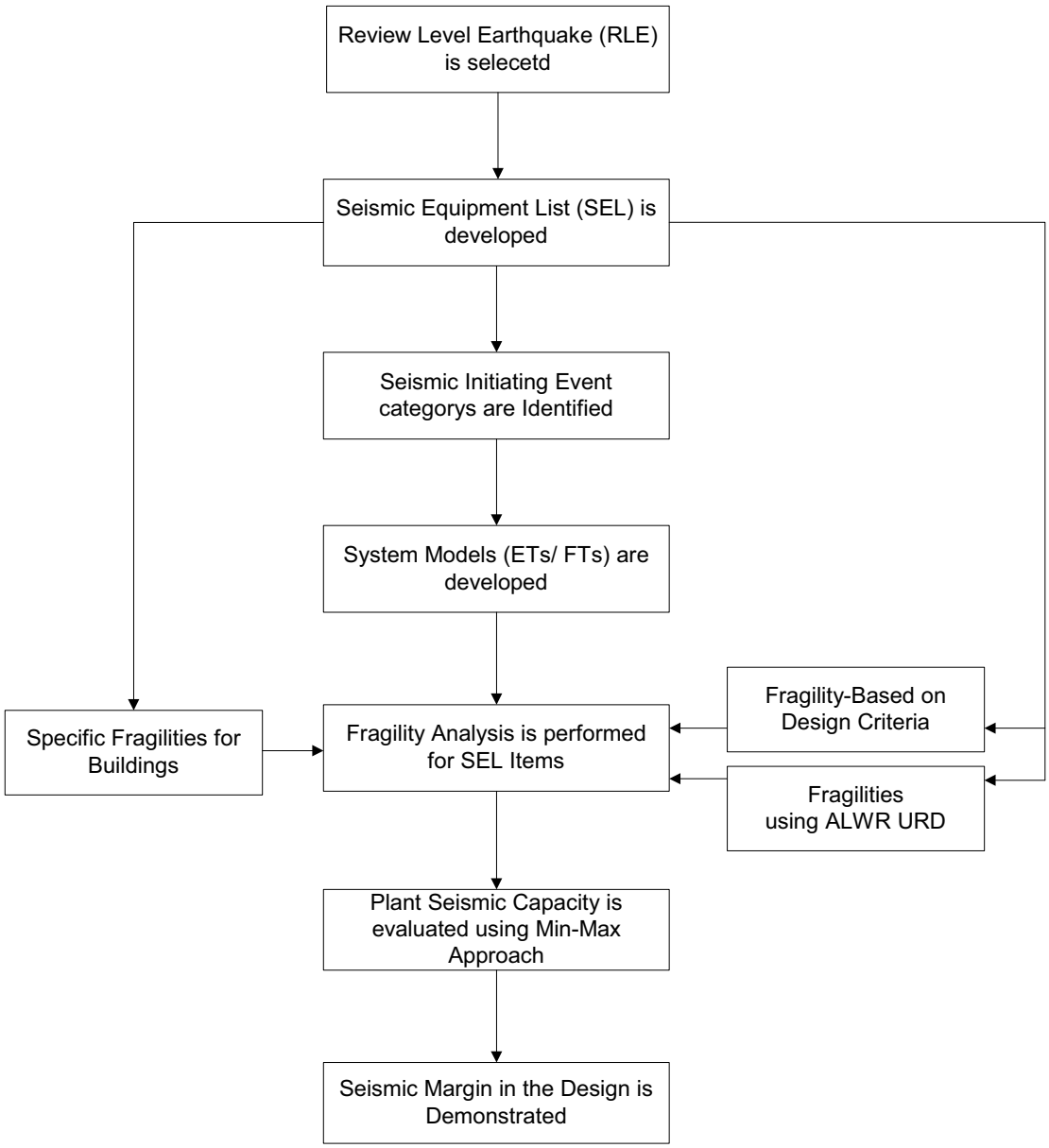

Figure 19.1-12 Outline for the PRA Based Seismic Margin Analysis

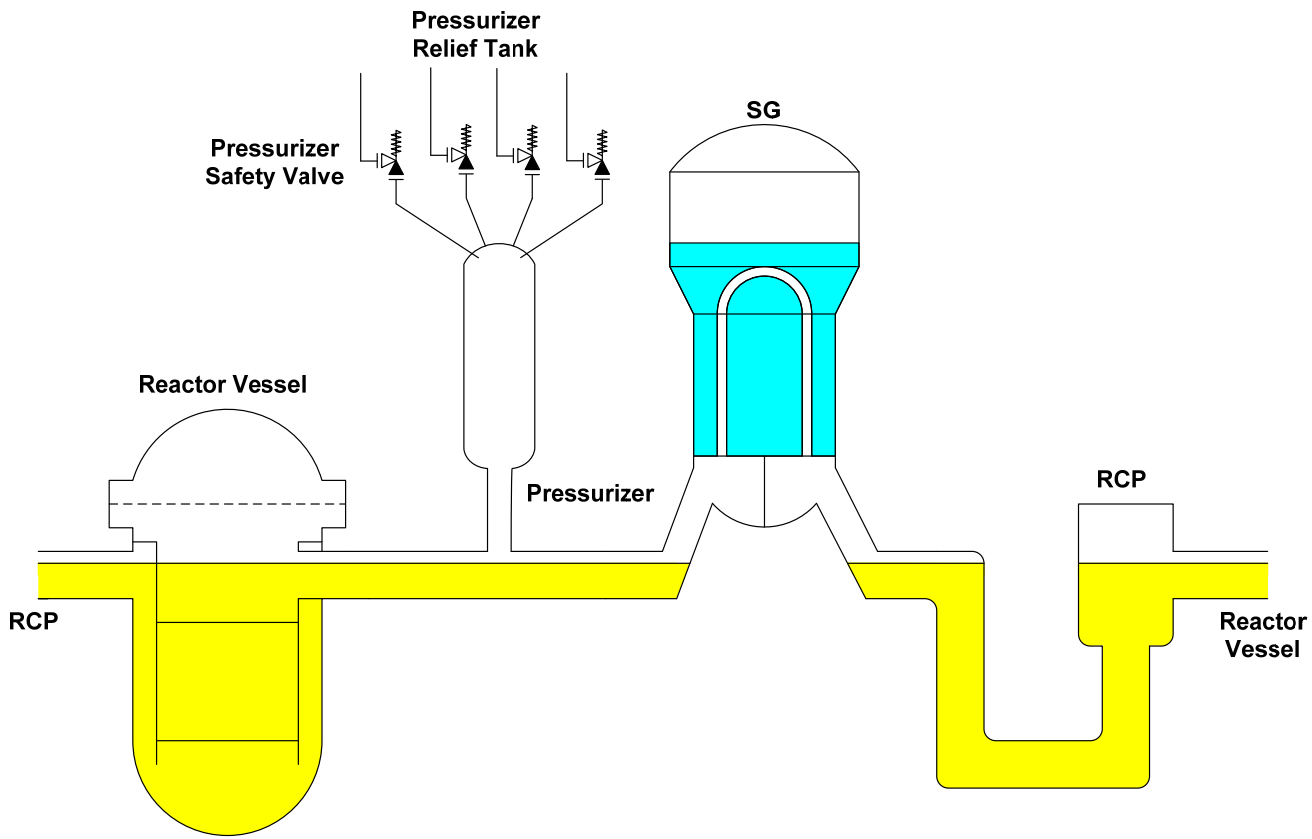

Figure 19.1-13 Feature of RCS Condition (POS 4-1 and POS 8-3)

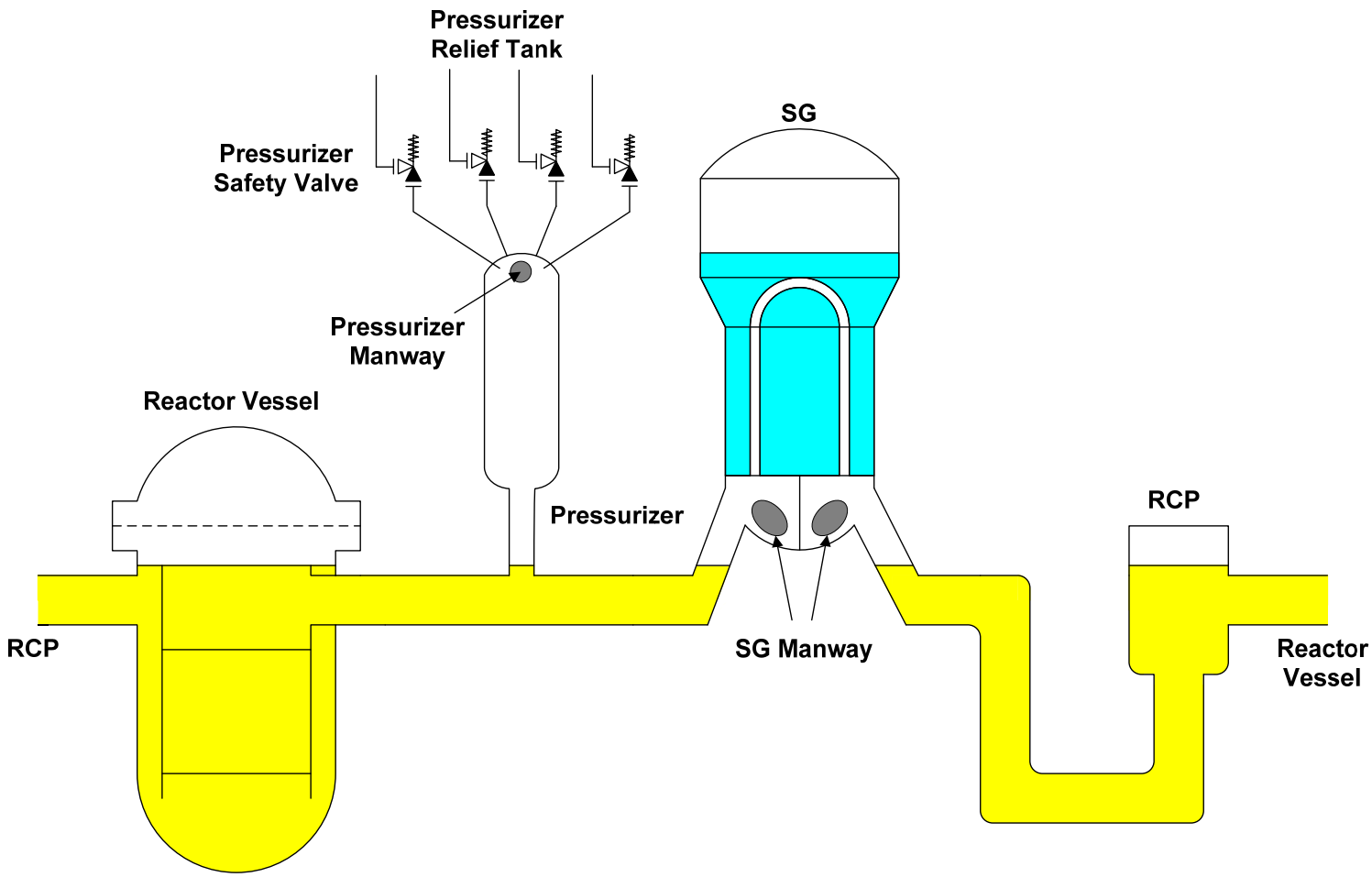

Figure 19.1-14 Feature of RCS Condition (POS 4-2 and POS 8-2)

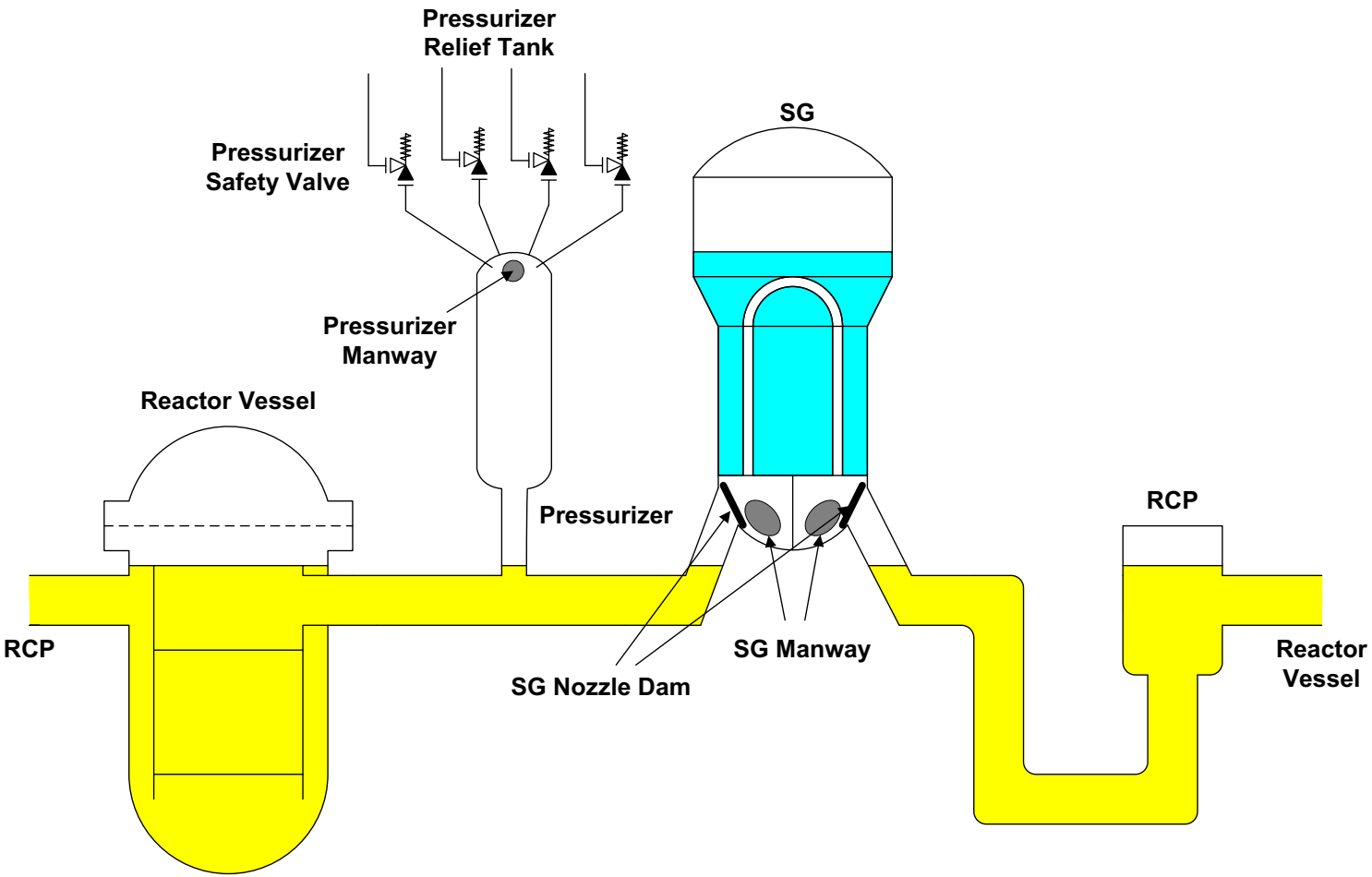

Figure 19.1-15 Feature of RCS Condition (POS 4-3 and POS 8-1)

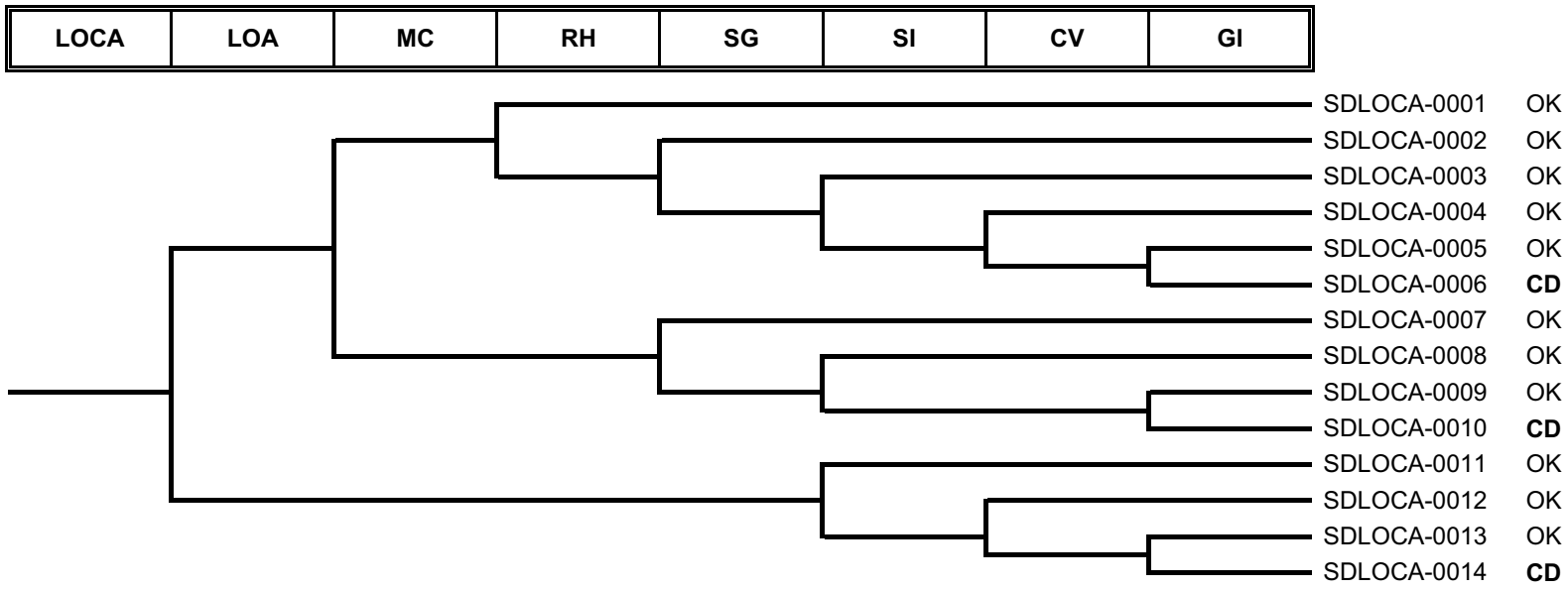

Event	Description
LOCA	: Loss of coolant accident
LOA	: Isolation of CS/RHR hot leg suction valves
MC	: RCS makeup by charging pump
RH	: Heat removal by standby CS/RHR pumps
SG	: Heat removal via SGs
SI	: Injection by HHIS
CV	: Injection by CVCS
GI	: Gravitational injection

Figure 19.1-16 Loss of Coolant Accident Event Tree

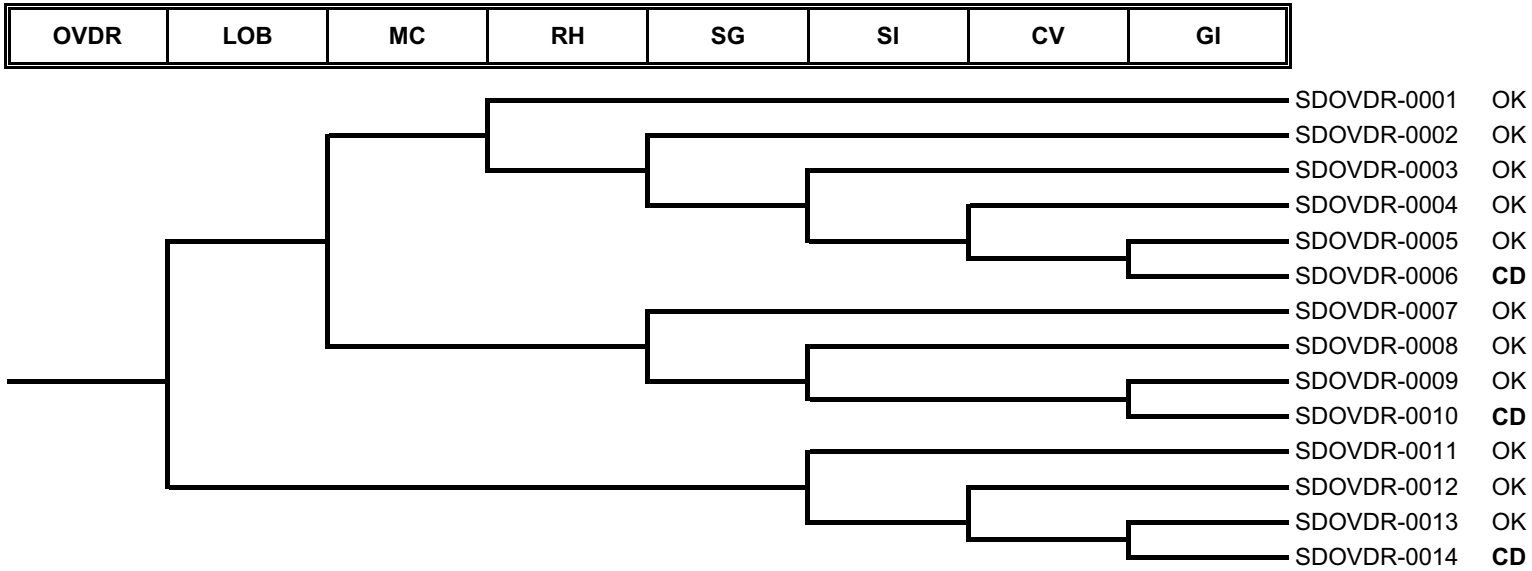

Event	Description
OVDR	: Loss of RHR due to over-drain
LOB	: Isolation of letdown line
MC	: RCS makeup by charging pump
RH	: Heat removal by standby CS/RHR pumps
SG	:Heat removal via SGs
SI	: Injection by HHIS
CV	: Injection by CVCS
GI	: Gravitational injection

Figure 19.1-17 Loss of RHR caused by Over-drain Event Tree

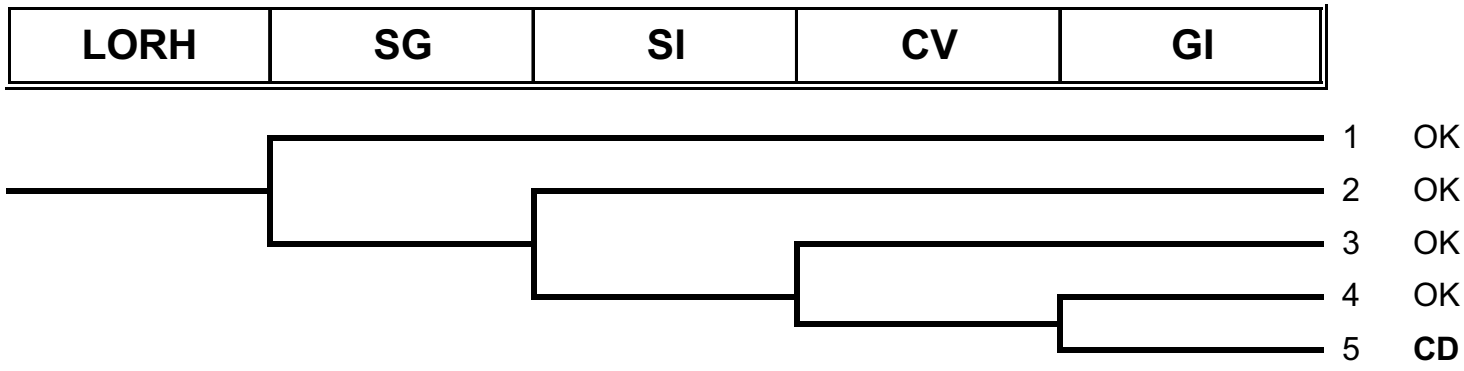

Event	Description
LORH	Loss of RHRS caused by other failures
SG	: Decay heat removed from the RCS via SGs
SI	: High head injection
CV	: Injection by the CVCS
GI	: Gravitational injection

Figure 19.1-18 Loss of RHRS caused by Other Failures Event Tree

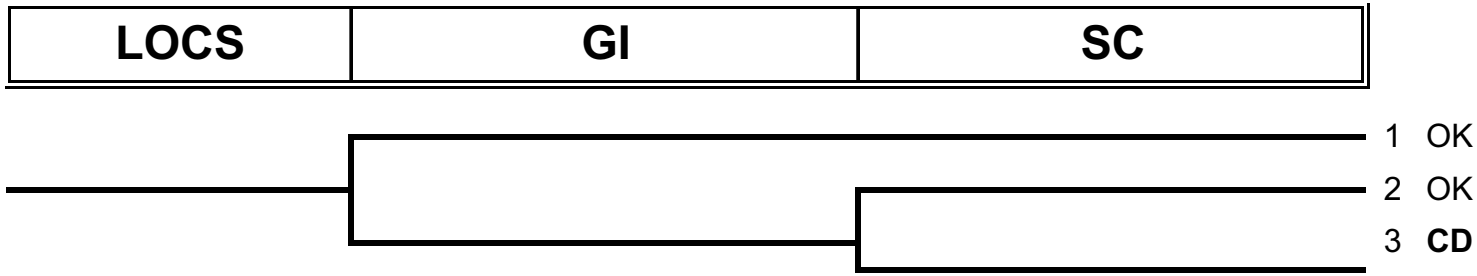

Event	Description
LOCS	Loss of CCW/essential service water
GI	: Gravitational injection
SC	: Injection by the CVCS using alternate component cooling water

Figure 19.1-19 Loss of CCW/Essential Service Water Event Tree

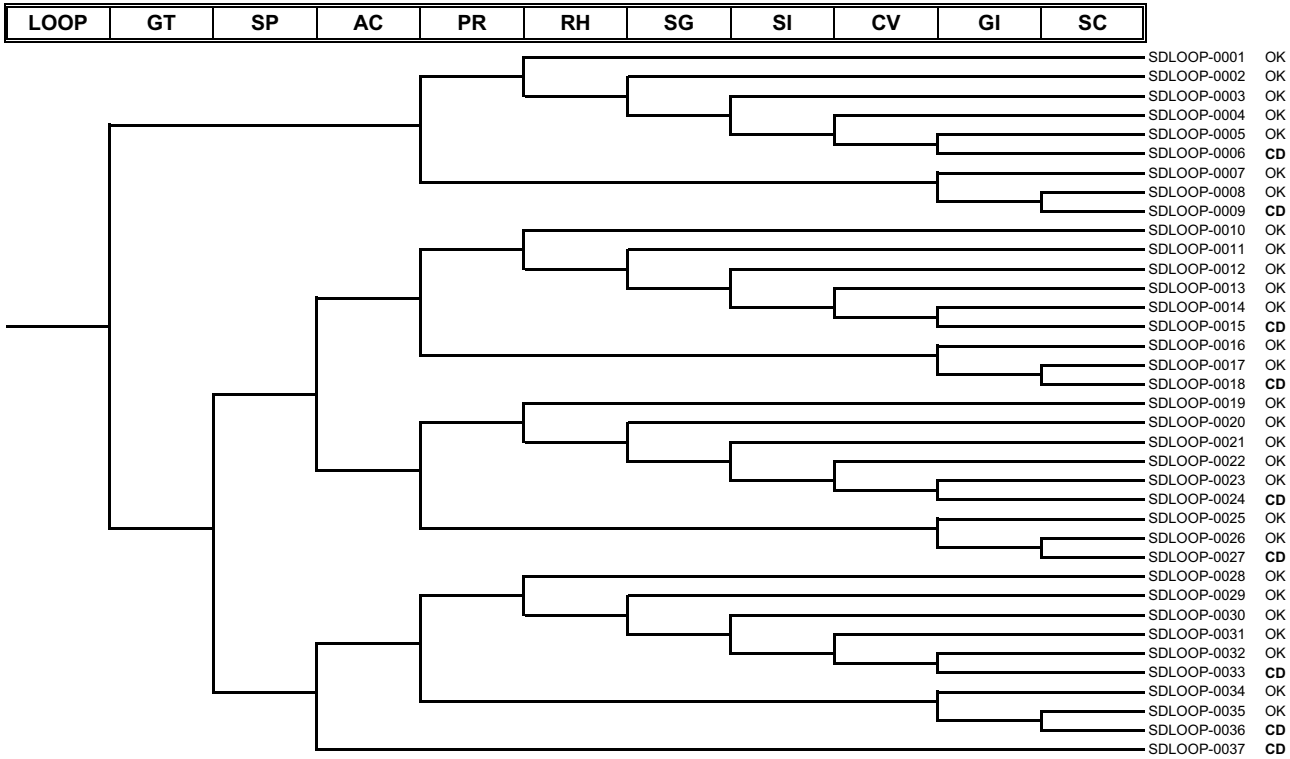

Event	Description
LOOP	: Loss of offsite power
GT	: Power supply by class 1E GTG
SP	: Power supply by AAC
AC	: Offsite power recovery
PR	: CCWS restart
RH	: Heat removal by standby CS/RHR pumps
SG	: Heat removal via SGs
SI	: Injection by HHIS
CV	: Injection by CVCS
GI	: Gravitational injection
SC	: Injection by CVCS using alternate component cooling

Figure 19.1-20 Loss of Offsite Power Event Tree

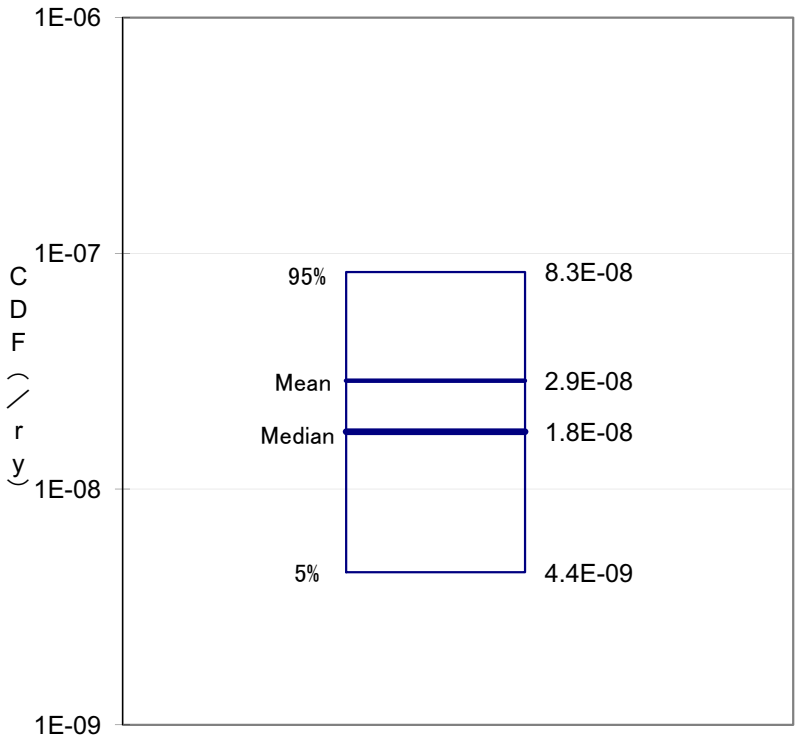

(1) POS 4-3

Figure 19.1-21 Result of Uncertainty Quantification for LPSD PRA (Sheet 1 of 2)

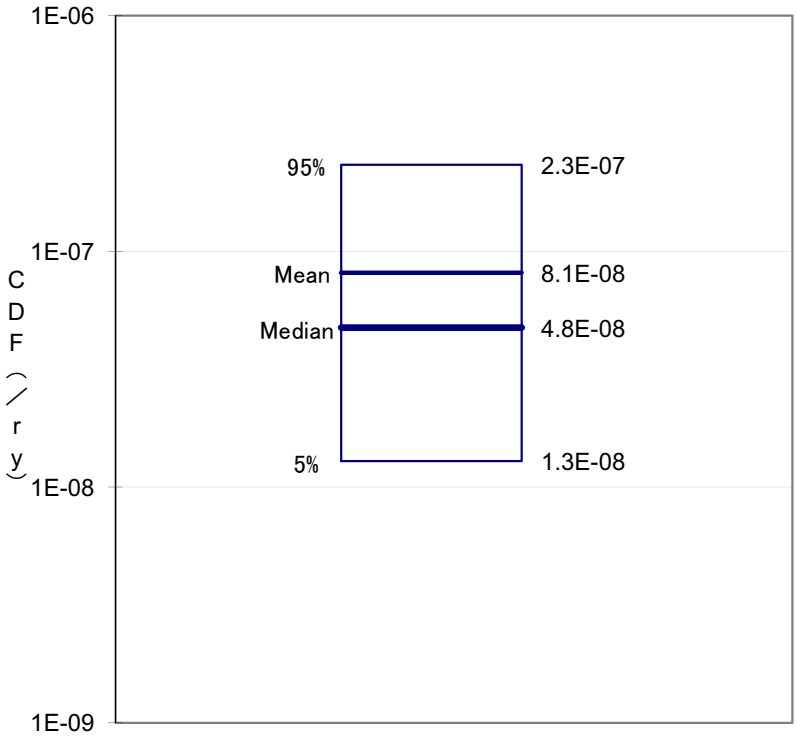

(2) POS 8-1

Figure 19.1-21 Result of Uncertainty Quantification for LPSD PRA (Sheet 2 of 2)

(POS8-1)

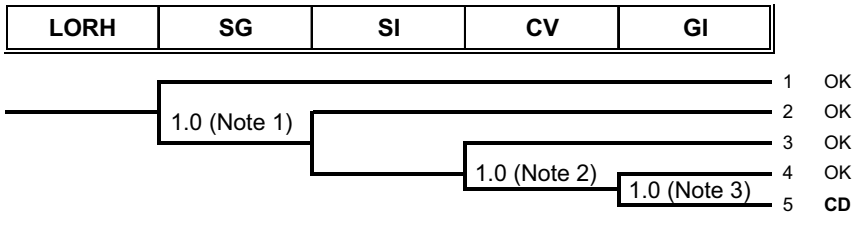

Event	Description
LORH	Loss of RHRS caused by other failures
SG	: Decay heat removed from the RCS via SGs
SI	: High head injection
CV	: Injection by the CVCS
GI	: Gravitational injection

Note 1 - SG is not available during POS 8-1.
Note 2 - CV is assumed to be non-functional due to a seismic event since the refueling water auxiliary tank is not Seismic Category I.
Note 3 - GI is assumed to be non-functional due to a seismic event since the refueling water recirculation pumps to provide boric water from RWSP to the spent fuel pits are not Seismic Category I.

Figure 19.1-22 Loss of RHRS caused by Seismic Event Tree

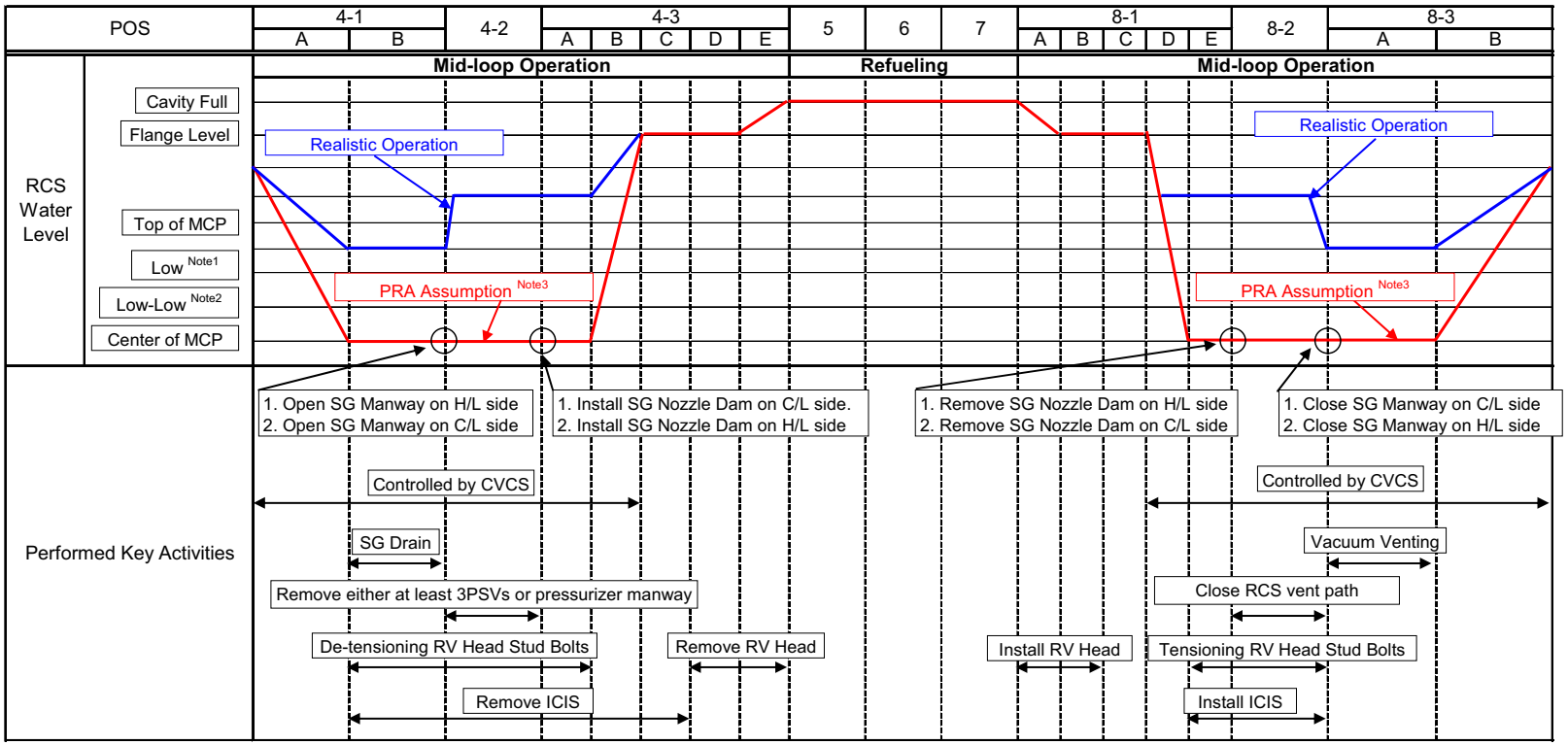

Note 1: Automaitic isolation for low-pressure letdown line when Low signal actuates
Note 2: Initiation of gravity injection when Low-Low signal actuates
Note 3: Assumptiion that RCS level is at a center of MCP is used for estimation of allowable time for core uncovery

CVCS: Chemical and Volume Control System
PSV: Pressurizer Safety Vavle
ICIS: In-Core Instrumentation System
MCP: Main Coolant Piping

RV: Reactor Vessel
H/L: Hot Leg
C/L: Cold Leg

Figure 19.1-23 Schematic Image of RCS Inventory with Key Activities

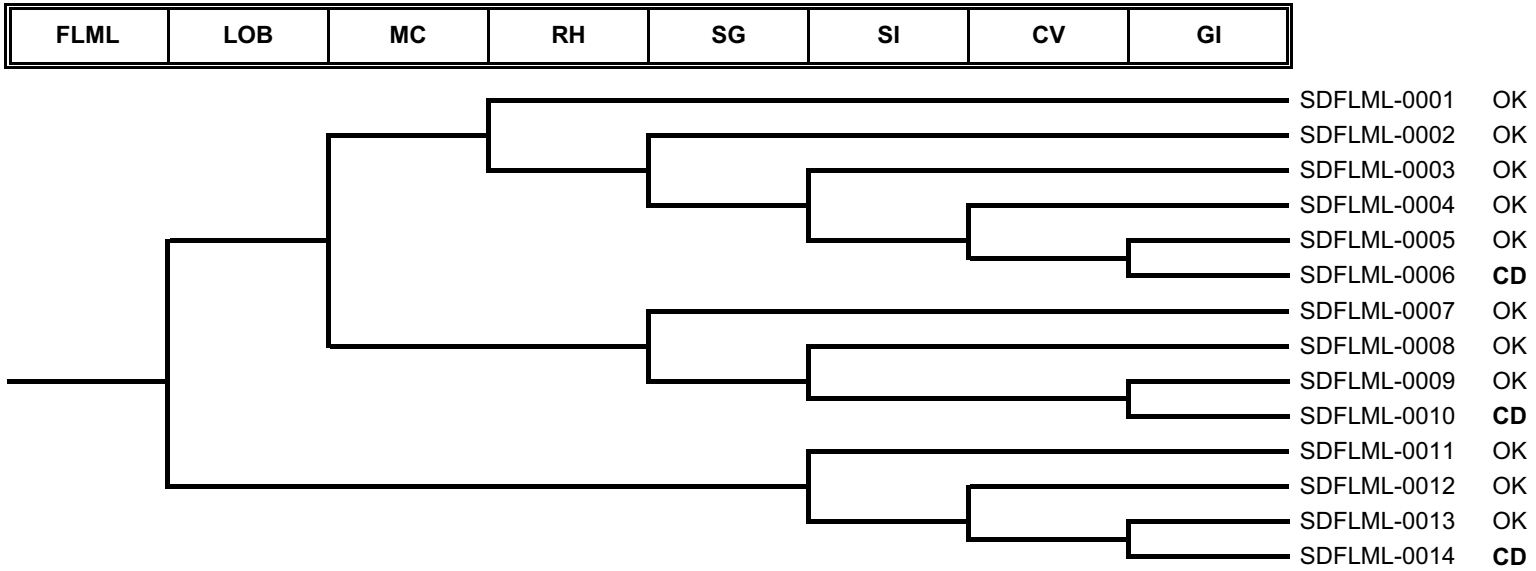

Event	Description
FLML	: Failure to maintain water level
LOB	: Isolation of letdown line
MC	: RCS makeup by charging pump
RH	: Heat removal by standby CS/RHR pumps
SG	:Heat removal via SGs
SI	: Injection by HHIS
CV	: Injection by CVCS
GI	: Gravitational injection

Figure 19.1-24 Loss of RHR caused by Failing to Maintain Water Level Event Tree

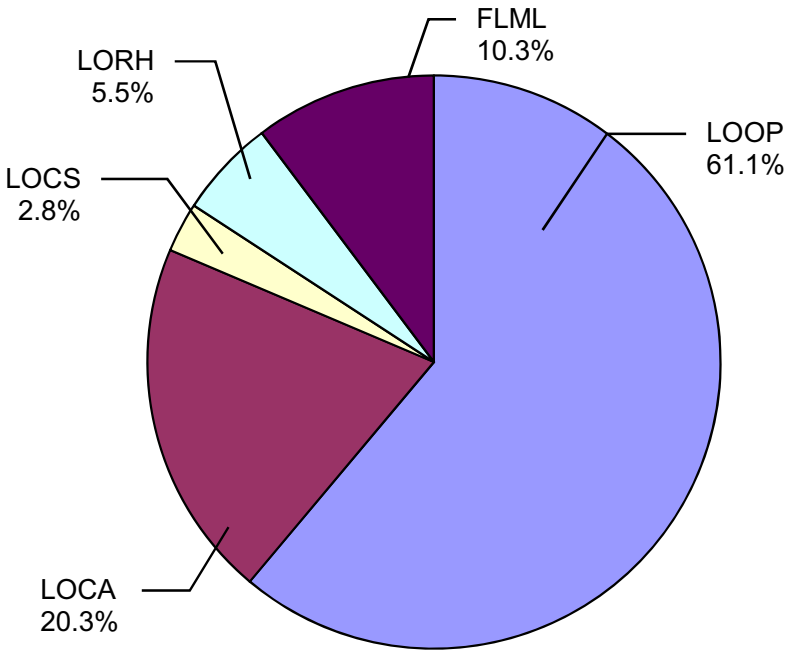

(1) POS 4-3

Figure 19.1-25 Internal Events Core Damage Frequency Contribution for LPSD PRA (Sheet 1 of 3)

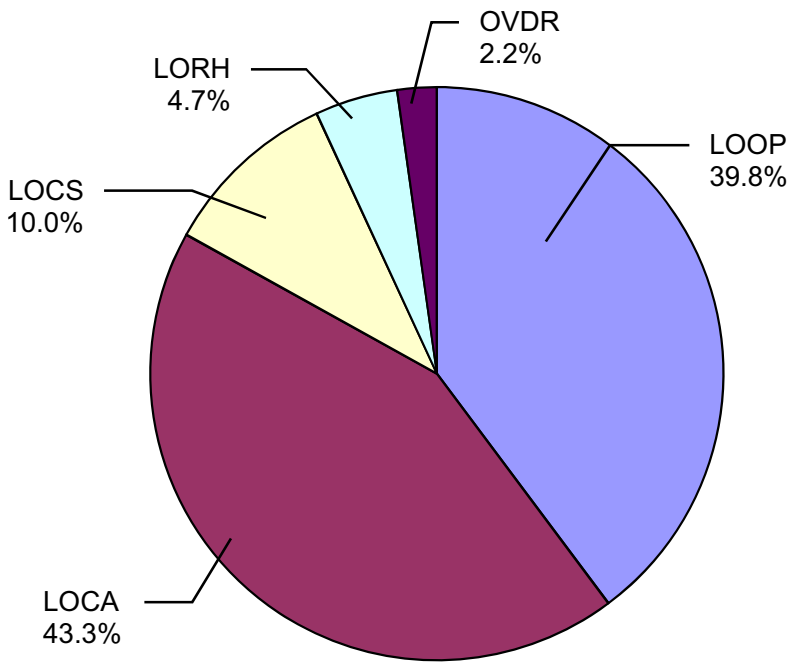

(2) POS 8-1

Figure 19.1-25 Internal Events Core Damage Frequency Contribution for LPSD PRA (Sheet 2 of 3)

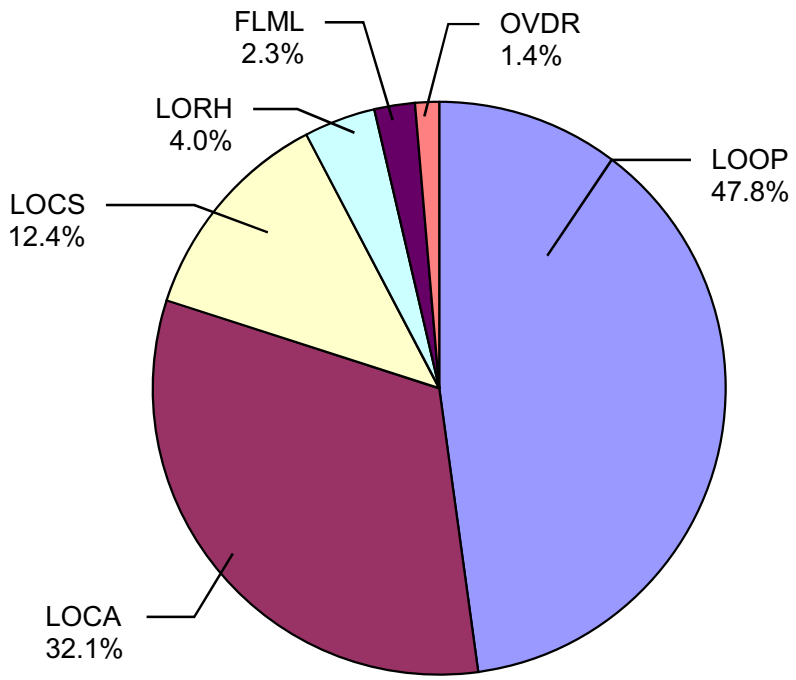

(3) ALL POSs

Figure 19.1-25 Internal Events Core Damage Frequency Contribution for LPSD PRA (Sheet 3 of 3)

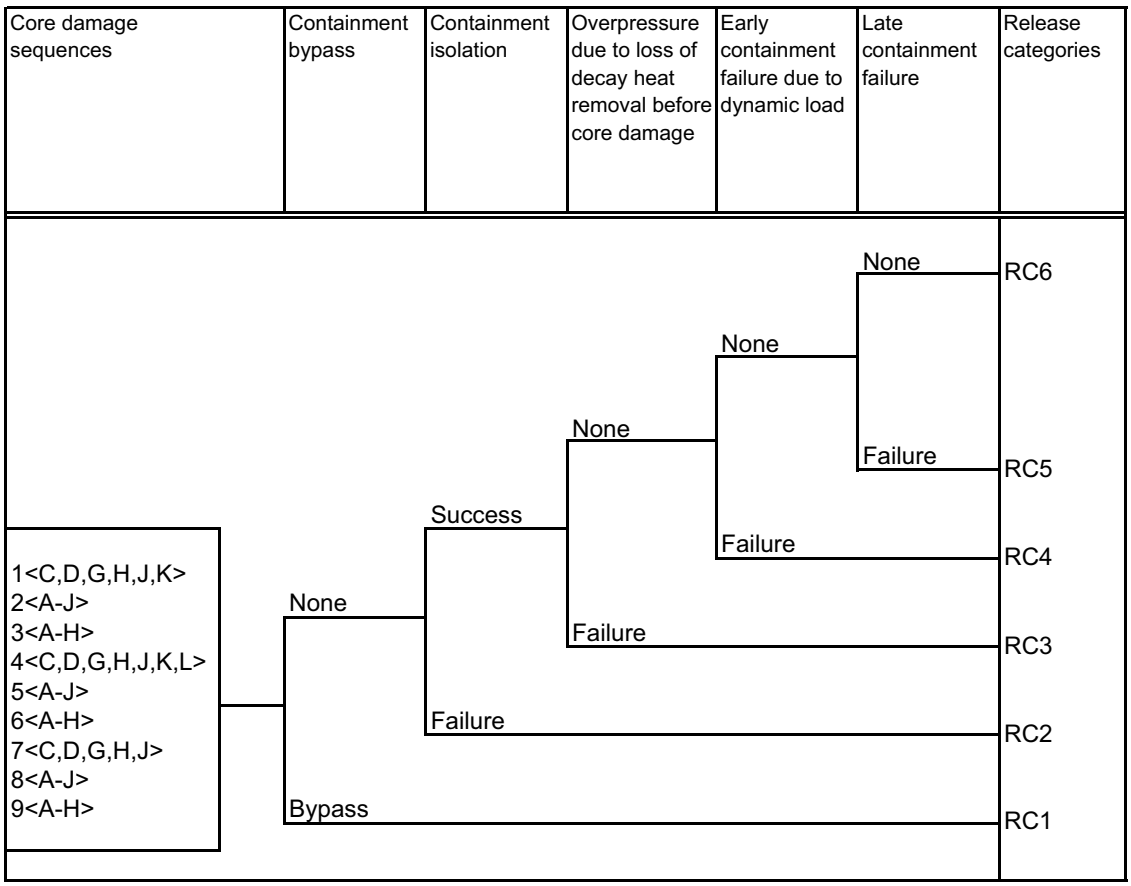

Figure 19.1-26 Logic Tree for Defining Release Categories

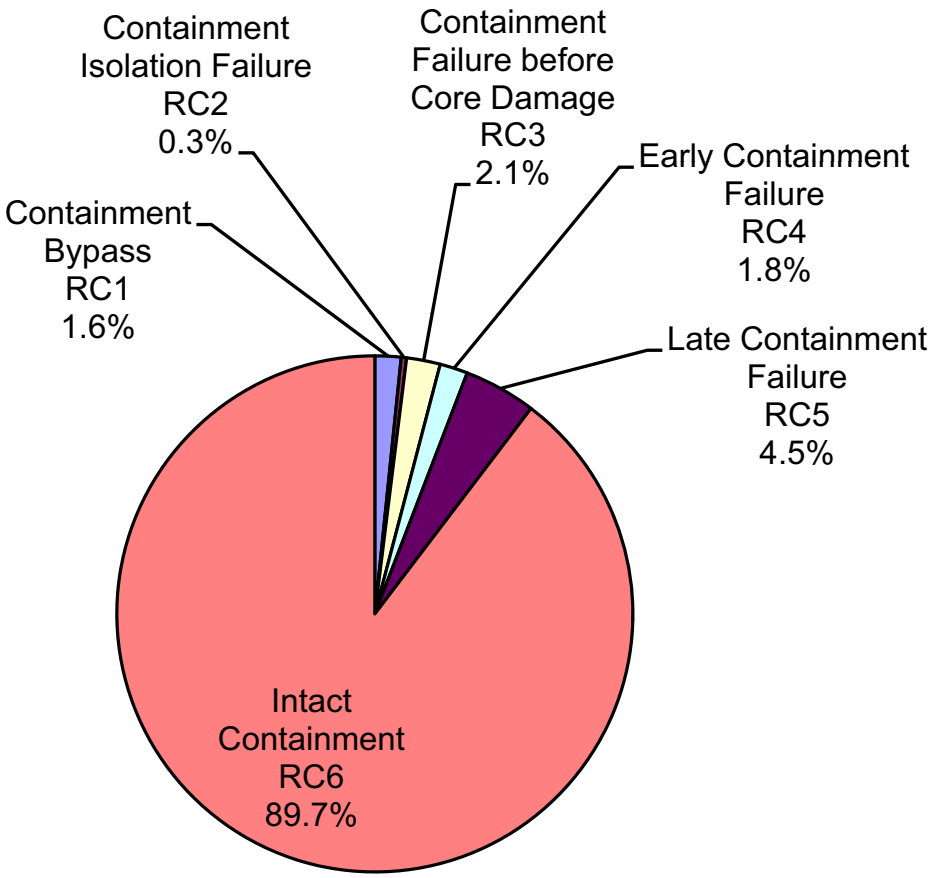

Figure 19.1-27 Contribution of Release Categories

19.2 Severe Accident Evaluation

This section describes the design features for the US-APWR to prevent and mitigate severe accidents in accordance with the requirements in 10 CFR 52.47(a)(23) (Reference 19.2-1). These features specifically address the issues identified in SECY-90-016 (Reference 19.2-2) and SECY-93-087 (Reference 19.2-3), which the NRC approved in related staff requirements memoranda dated June 26, 1990, and July 21, 1993, respectively, and SECY-94-302 (Reference 19.2-4) for prevention (e.g., anticipated transient without scram, mid-loop operation, SBO, fire protection, and interfacing system LOCA), for mitigation (e.g., hydrogen generation and control, core debris coolability, high-pressure core melt ejection, containment performance, dedicated containment vent penetration) and for equipment survivability.

In addition, the US-APWR design is demonstrated to satisfy the requirements of 10 CFR 52.47(a)(8) for a design certification application. In particular, this regulation invokes 10 CFR 50.34(f)(1)(i) (Reference 19.2-5) to specify that a design-specific or plant-specific PRA should be performed to seek improvements in core heat removal system reliability and containment heat removal system reliability that are significant and practical and do not excessively impact the plant.

19.2.1 Introduction

This section provides a description of the severe accident evaluation performed for the US-APWR. Specifically, Subsection 19.2.2 provides a deterministic evaluation to show how the plant severe accident preventive features would cope with specified accident conditions. Subsection 19.2.3 provides an overview of the containment design, describes severe accident progression (in-vessel and ex-vessel), and describes severe accident mitigation features. Subsection 19.2.4 addresses containment performance goals identified in SECY-93-087 and SECY-90-016, as approved by the associated U.S. NRC staff requirements memoranda. Subsection 19.2.5 describes the actions taken during the course of a postulated severe accident by the plant operating and technical staff. Finally, Subsection 19.2.6 describes how the requirement of 10 CFR 50.34(f)(1)(I) has been met.

19.2.2 Severe Accident Prevention

The purpose of this subsection is to provide a deterministic evaluation to show how the US-APWR design's severe accident preventive features act to prevent the following events:

- Anticipated transient without scram
- Mid-loop operation
- SBO
- Fire
- Intersystem LOCA

Other severe accident preventive features of the US-APWR design are identified to conclude this subsection.

19.2.2.1 Anticipated Transient Without Scram

The safety grade reactor protection system is highly reliable due to the independent four-train design. The DAS, which has functions to prevent anticipated transient without scram, is installed as a countermeasure to CCF of the digital I&C systems and thus will preclude anticipated transient without scram events.

19.2.2.2 Mid-Loop Operation

The RHRS is highly reliable due to the independent four-train design. To prevent over-drain during mid-loop operation, an interlock, actuated by the detection of water level decrease, acts to isolate water extraction. Charging injection, high head injection, heat removal via SGs, and water injection from the spent fuel pit by gravity are also available as alternate core cooling mechanisms if the RHRS is not operative.

19.2.2.3 Station Black-Out

An independent, four-train, emergency ac power source design is applied. Two alternate ac power sources, which can supply power to the emergency buses, are introduced in order to prevent a total loss of ac power when all emergency ac power sources are lost. Even if SBO occurs, core damage is prevented at an early stage by the adoption of two turbine-driven emergency feed water pumps, four emergency batteries, and advanced RCP seal design.

19.2.2.4 Fire Protection

In the US-APWR design, safety systems are physically separated in order to assure safe shutdown following fire-induced initiating events. Loss of multiple trains by fire is prevented by physical separation of the four-train safety systems.

19.2.2.5 Intersystem Loss-of-Coolant Accident

Lines connected to the RCS have redundant isolation valves in order to prevent the RHRS from being exposed to RCS pressure during full power operation. Relief valves are installed to prevent over-pressurizing the RHRS if the isolation valves should leak. Any flow through the relief valves is directed to the in-containment RWSP. In addition, the RHRS is designed not to fail by over-pressure even if a large internal leak occurs in the redundant isolation valves. The RHRS piping is rated at 900 psig.

19.2.2.6 Other Severe Accident Preventive Features

The US-APWR design uses other features to prevent severe accidents including:

- In the case of an event that requires SG cooling, but where the EFWS is not available, feedwater can be continuously supplied to the SG by opening the crosstie valve at the EFWS pump exit.
- In the case of loss of all feedwater, feed and bleed operation is possible by SIS and pressurizer SDVs, which have redundancy.

- In the case of a LOCA, if the function of the SIS is lost, core cooling is achieved by using CS/RHRS. If the function of the containment spray is lost, long term heat removal is achieved by using CS/RHRS.
- In the case of a LOCA without the function of the containment heat exchanger, containment failure before core damage is prevented by alternate containment cooling by containment fan cooler system.
- The CCWS/ESWS is composed of four-train systems. These systems are designed to be separated automatically in an accident and to achieve a high level of reliability. If the CCWS/ESWS is lost at power operation, RCP seal injection function is prevented by the supply of alternate component cooling water to charging pumps. In the case of LPSD, if the CCWS/ESWS is lost, the core remains covered by supplying cooling water from one of the charging pumps with alternate component cooling water.

19.2.3 Severe Accident Mitigation

This subsection provides an overview of the containment design for the US-APWR with respect to mitigating severe accidents. Severe accident progression is described both in-vessel and ex-vessel, followed by a description of severe accident mitigation features. In particular, mitigation features are described for external RV cooling, hydrogen generation and control, core debris coolability, high-pressure melt ejection, fuel-coolant interactions, containment bypass (including SGTR and intersystem LOCA), equipment survivability, and other severe accident mitigation features.

19.2.3.1 Overview of the Containment Design

The containment is designed as an essentially leak-tight barrier that will safely accommodate calculated temperature and pressure conditions resulting from the complete size spectrum of piping breaks, up to and including a double-ended, guillotine-type break of a reactor coolant or main steam line.

The containment provided for the US-APWR is large volume type pre-stressed concrete containment (PCCV). The containment systems to mitigate severe accident are fundamentally the same as a typical current 4 loop PWR plant design. Thus the US-APWR containment systems do not introduce any new phenomena or configurations. The severe accident treatments and the related containment systems are discussed in the following subsections.

19.2.3.2 Severe Accident Progression

The accident progression analysis, including in-vessel and ex-vessel melt progressions, determines the physical and thermal-hydraulic behavior of accident sequences. Severe accident progression analysis as part of the US-APWR design is performed employing MAAP 4.0.6 code in accordance with the process of Level 2 PRA. Severe accident progression analysis is also performed in order to evaluate the effectiveness of specific design features provided to mitigate the consequences of a severe accident. In case any specific effects cannot be properly modeled by MAAP code, appropriate separate effect codes are employed to evaluate the specific accident progression.

19.2.3.2.1 In-Vessel Melt Progression

Key events evaluated in terms of the in-vessel melt progression are core uncovery, core damage and molten core relocation to lower plenum. Potential consequences from core uncovery and core damage that may result in a challenge to the containment integrity include hydrogen generation and release, and temperature-induced SGTR. Potential consequences from core relocation include in-vessel steam explosion. These accidental events are addressed more detail in Subsection 19.2.3.3. In-vessel retention of core debris by external RV cooling is evaluated as an effective potential mechanism for severe accident mitigation. Various physical phenomena related to severe accidents such as steam explosions and MCCI, which are the consequences of a result of core debris relocation to the reactor cavity, are prevented and resolved by attaining in-vessel retention. Since the US-APWR is designed to fill the reactor cavity with coolant water when a severe accident occurs, external RV cooling may be possible. In-vessel retention is, however, not credited for the US-APWR severe accident treatment or in the Level 2 PRA study due to its inherent uncertainty.

19.2.3.2.2 Ex-Vessel Melt Progression

Key events evaluated for the ex-vessel melt progression are melt relocation from vessel breach to the reactor cavity, fuel-coolant interaction, MCCI and debris cooling. Potential consequences from the ex-vessel melt progression events that may result in challenges to the containment integrity include hydrogen generation and combustion, ex-vessel steam explosion, basemat melt through, non-condensable gas generation, DCH, rocket-mode RV failure and long-term containment overpressure due to postulated failure of the decay heat removal function. These accidental events are addressed more detail in Subsection 19.2.3.3.

19.2.3.3 Severe Accident Mitigation Features

This subsection describes severe accident mitigation features for external reactor vessel cooling, hydrogen generation and control, core debris coolability, high-pressure melt ejection, fuel-coolant interactions, containment bypass (including steam generator tube rupture and intersystem LOCA), equipment survivability, and other severe accident mitigation features.

The fundamental design concept of the US-APWR for severe accident termination is to flood the reactor cavity with coolant water when a severe accident occurs, keep the molten fuel within the reactor cavity and provide sufficient cooling to maintain the core debris in a safe, cooled state for the long-term. This design concept is readily achievable by applying the existing design features implemented in current PWR plants, and it is expected that challenges posed by severe accidents are appropriately terminated.

The US-APWR design addresses the following eight severe accident issues with respect to mitigation features:

(1) Hydrogen generation and control (Subsection 19.2.3.3.2)

(2) Core debris coolability (Subsection 19.2.3.3.3)

(3) Steam explosion (in-vessel and ex-vessel) (Subsection 19.2.3.3.5)

(4) High pressure melt ejection (Subsection 19.2.3.3.4)

(5) Temperature-induced SGTR (Subsection 19.2.3.3.6)

(6) MCCI (Subsection 19.2.3.3.3)

(7) Long-term containment overpressure (Subsection 19.2.3.3.8)

(8) Equipment survivability (Subsection 19.2.3.3.7)

Severe accident mitigation design features provided for the US-APWR are basically the same as provided for current PWR plants with some improvements. Thus, the US-APWR design does not introduce any new phenomena or configurations. This is an advantage in terms of the reliability of system functionality since there are numerous studies and experiments available on the functions, capabilities, and limitations for these design features. This experimental and analytical database of information significantly improves the reliability of features addressed in the US-APWR designs.

Table 19.2-1 provides a listing of the US-APWR design features for mitigating severe accidents and the phenomenon mitigated. Figure 19.2-1 shows the design features for severe accident mitigation in the US-APWR. The numbers shown in boxes following the name of mitigation features correspond to the specific severe accident phenomenon addressed in the US-APWR design, discussed in this subsection.

19.2.3.3.1 External Reactor Vessel Cooling

In-vessel retention of core debris by external RV cooling is considered as effective potential mechanism for severe accident mitigation. Various physical phenomena related to severe accidents such as steam explosions and MCCI, which are the consequences of a result of core debris relocation to the reactor cavity, are prevented and resolved by attaining in-vessel retention. Since the US-APWR is designed to fill the reactor cavity with coolant water when a severe accident occurs, external RV cooling may be possible. However, in-vessel retention is not credited for the US-APWR severe accident treatment or in the Level 2 PRA study due to its inherent uncertainty.

19.2.3.3.2 Hydrogen Generation and Control

The US-APWR design includes a PCCV, which is a large volume type containment. Large volume containments are widely acknowledged as having a good ability for containment atmosphere mixing since any compartments are widely open to the neighboring area and do not form airtight space. This feature contributes to preventing combustible gas accumulation. The containment vessel also provides sufficient strength to withstand pressure loads generated by most hydrogen burns.

For controlling hydrogen generated during a severe accident, the hydrogen ignition system, which consists of twenty hydrogen igniters, is provided. Hydrogen ignition is a proven technique to control combustible gases to prevent violent detonation, and has advantages such as no poisoning effect, good capability to control combustible gas in

terms of gas amount and controlling speed, compact in size, easy to maintain, etc. The location of the hydrogen igniters is carefully determined through accident progression analyses using GOTHIC7.2a-p5(QA) code in order to enhance the effectiveness to control hydrogen.

If combustible gas control method other than inerting is adopted, the potential for diffusion flame induced containment failure is considered. The potential challenge to containment integrity by diffusion flames can be significantly reduced through consideration of location arrangement. Therefore, the pathways for in-vessel hydrogen flow and the potential location of diffusion flame is examined. And accordingly, challenges created by potential diffusion flame impacting directly the wall and the effect on containment integrity can be resolved.

Hydrogen monitors are also provided to continuously monitor hydrogen concentration during a severe accident.

Mitigation features

Mitigation features provided for US-APWR to address hydrogen generation and control are:

- Large volume containment
  - Provides hydrogen mixing and protection against hydrogen burns
- Hydrogen ignition system
  - Controls hydrogen rapidly with high reliability

Summary of relevant studies and experiments

A summary of relevant studies and experiments about hydrogen generation and control is shown in Table 19.2-2.

Goals of analysis

The goals of analysis for hydrogen generation and control are to meet the following requirements:

- Demonstrate that containment has capability for ensuring a mixed atmosphere (10 CFR 50.44(c)(1)) (Reference 19.2-6)
- Demonstrate that uniformly distributed hydrogen concentration is less than 10% by volume when hydrogen ignition system is functional (10 CFR 50.34(f)(2)(ix) (Reference 19.2-5) and 10 CFR 50.44(c)(2))
- Demonstrate that containment integrity is maintained when hydrogen ignition system is functional, assuming hydrogen generated from 100% fuel cladding-coolant reaction (10 CFR 50.34(f)(3)(v)(A)(1) and 10 CFR 50.44(c)(5))

- Demonstrate that containment integrity is maintained to address an accident that releases hydrogen generated from 100% fuel clad-coolant reaction accompanied by hydrogen burning (10 CFR 50.44 (c)(5))

Analysis approach

In order to satisfy the goals of analysis, the analytical approaches below are utilized:

- Evaluate effectiveness of hydrogen ignition system and local concentration of hydrogen
  - Employ MAAP to evaluate the hydrogen generation rate
  - Calculate independently the amount of hydrogen generated from 100% zirconium of active fuel length cladding-coolant reaction
  - Modify the MAAP results with independently calculated amount of hydrogen generation, and apply as boundary conditions for GOTHIC calculations
  - Employ GOTHIC with igniter model to evaluate effectiveness of hydrogen ignition system and atmospheric mixing through multi-nodes and sub-divided volumes
  - Show that local hydrogen concentration during severe accident is less than 10% by volume
- Evaluate containment structural capability against local hydrogen burn
  - Investigate structural capability to withstand pressure rise due to hydrogen control by hydrogen ignition system
  - Evaluate in accordance with the approach specified by ASME Boiler Pressure Vessel Code, Section III, Division 2 Subsubarticle CC-3720, Factored Load Category
  - Criterion of containment structural capability is based on ultimate capability, not on design capability
- Evaluate containment structural capability against global hydrogen burn
  - Evaluate the containment pressure rise assuming adiabatic isochoric complete combustion of hydrogen
  - Examine containment structural integrity against pressure rise

Analysis result

Accident progression analyses for hydrogen generation and control utilizing the hydrogen ignition system have been performed using GOTHIC code. In the developed GOTHIC model, hydrogen igniters are located at 20 locations in the containment and are modeled to initiate hydrogen burning when hydrogen concentration becomes greater than 8% by

volume except under the condition inerted by steam. In addition, the specific severe accident scenario, SBO with loss of AAC, is evaluated as one of the more likely severe accident scenarios in accordance with the definition provided in RG 1.216 (Reference 19.2-71). For this specific scenario, it is assumed that 11 strategically located igniters are powered by batteries for 24 hours following the onset of SBO and loss of AAC.

Hydrogen concentration in each compartment is either lower than 10% or the compartment is inerted by steam. The pressure in the containment is kept below 68 psia, and this pressure is much lower than the containment ultimate pressure 216 psia as described in DCD section 19.2.4. Therefore, containment integrity is maintained against hydrogen combustion events, and the requirements of 10 CFR 50.44(c)(1), 10 CFR 50.34(f)(2)(ix), 10 CFR 50.44(c)(2), 10 CFR 50.34(f)(3)(v) (A)(1), and 10 CFR 50.44(c)(5) are met.

The maximum pressure in the containment vessel under the adiabatic isochoric complete combustion condition is 127 psia. This pressure is lower than the containment ultimate pressure of 216 psia, thus the requirement of 10 CFR 50.44(c)(5) is met.

19.2.3.3.3 Core Debris Coolability

The fundamental design concept of the US-APWR for severe accident termination is reactor cavity flooding and cool down of the molten core by the flooded coolant water. Therefore, dependable systems are provided to properly flood the reactor cavity during a severe accident. The US-APWR provides a diverse reactor cavity flooding system, which consists of the CSS with a drain path from the SG compartment to the reactor cavity and firewater injection to the reactor cavity. The CSS is automatically activated when the High-3 containment pressure is detected and P-signal is transmitted. This containment spray water flows into the reactor cavity from the SG compartment through the drain path by gravity. The fire protection water supply system is provided outside of containment and in stand-by status during normal operation. The system line-up is modified for emergency operation during a severe accident and provides firewater from outside to the reactor cavity. These two systems are independent and, thus provide high reliability reactor cavity flooding.

MCCI is a phenomenon that occurs when the temperature of core debris exceeds the melting temperature of concrete, and concrete is gradually eroded by high-temperature core debris resulting in potential basemat melt-through. Therefore, the primary mitigation of MCCI is cool down of core debris that has been relocated from RV to the reactor cavity. The US-APWR provides a highly reliable reactor cavity flooding system as discussed above, and coolant water is continuously supplied during a severe accident. The reactor cavity floor concrete, which has a thickness of equal to or greater than 3 ft., provides protection against direct attack to the steel liner plate by the relocated core debris. This steel liner plate underneath the reactor cavity floor concrete is the pressure boundary between containment and the environment.

The geometry of the reactor cavity was designed to ensure adequate core debris coolability. Sufficient reactor cavity floor area, which is equal to or greater than 970 ft^2, is provided to enhance spreading of the core debris. This ensures that an adequate interface is maintained between the core debris and coolant water and that the thickness of the deposited core debris is reduced to diminish the heat flux transmitted from the core

debris to the reactor cavity floor concrete. In Generic Letter No. 88-20 issued by NRC in 1988; it states "…assessments (should) be based on available cavity (spread) area and an assumed maximum coolable depth of 25 cm. For depths in excess of 25 cm, both the coolable and noncoolable outcomes should be considered." In order to address this discussion, the debris spreading behavior is carefully reviewed in handling the US-APWR core debris coolability issue at the design stage. Reactor cavity depth is also designed to provide a sufficient degree of debris break-up due to interaction of molten core and coolant water for better coolability. The depth is equal to or greater than 20 ft from the bottom of the reactor vessel.

A concern on re-criticality may arise due to reactor cavity flooding with unborated firewater. Re-criticality may occur if molten debris drops into water with low boron concentration and the low borated water may ingress into the gap of broken-up debris bed. However, if the gap within the debris bed is smaller than the moderator's volume ratio required for criticality, re-criticality does not occur. Also, residual gadolinium in molten fuel works as a preventive measure to preclude criticality. Thus, the possibility of re-criticality is considered very limited. Even in case that re-criticality would have occurred and molten fuel become in a heat-generating status, the power generation decreases due to generated void. And hence, it is very unlikely that this power generation due to re-criticality would become a severe challenge to containment integrity.

Mitigation features

Mitigation features provided for the US-APWR to address core debris coolability are:

- Diverse reactor cavity flooding system
  - Consists of drain path injection and firewater injection to ensure flooding of reactor cavity within required duration
- Reactor cavity geometry
  - Provides sufficient reactor cavity floor area and appropriate reactor cavity depth to enhance spreading debris bed for better coolability
- Reactor cavity floor concrete
  - Provides protection against challenge to liner plate melt through
- Basemat concrete
  - Provides protection against fission products release to the environment

Summary of relevant studies and experiments

A summary of relevant studies and experiments about core debris coolability is found in Table 19.2-3.

Goals of analysis

For core debris coolability, no specific requirements are stated in the CFRs. The goals of analysis for core debris coolability below are therefore established to ensure termination of severe accident progression in accordance with 10 CFR 52.47 (a) (23) (Reference 19.2-1).

- Demonstrate that core debris is adequately cooled when the reactor cavity is adequately flooded
- Demonstrate that containment integrity is maintained against pressure rise due to MCCI more than 24 hours following the onset of core damage
- Demonstrate that basemat melt through does not occur within 24 hours following the onset of core damage
- Demonstrate that the core debris deposition thickness on the reactor cavity floor is below approximately 25 cm (=10 in.)
- Address the inherent phenomenological uncertainties related to core debris coolability and MCCI, and confirm the above goals are still satisfied under reasonably conservative assumptions.

Analysis approach

In order to satisfy the goals of the analysis, the following analytical approaches are utilized:

- Perform severe accident progression analysis
  - Employ MAAP to investigate core debris coolability and MCCI
  - Consider characteristic scenarios for debris cooling and MCCI
    - Debris drops into water pool
    - Water is injected onto molten core on reactor cavity floor
    - No water is available in the reactor cavity
- Examine containment structural capability
  - Investigate whether containment integrity is maintained more than 24 hours following the onset of core damage against
    - Pressure rise by steam and non-condensable gas generation due to MCCI
    - Basemat melt through
- Evaluate the core debris spreading behavior
  - Employ FLOW-3D code to evaluate the debris spreading
  - Assume no debris break-up by fuel-coolant interaction

- Confirm the debris deposition thickness is less than approximately 25 cm, suggested by the NRC staff as the debris coolable criterion

- Consider inherent phenomenological uncertainties
  - Examine the effectiveness of debris coolability by heat transfer between core debris and overlying water pool
  - Perform sensitivity analysis using MAAP for parameters related to the core debris coolability, such as
    - Heat transfer coefficient by film boiling
    - Amount of core debris involved in a postulated accident event

- Examine material properties
  - Investigate the characteristic differences between limestone/common sand and basalt in terms of MCCI, such as
    - Erosion rate
    - Amount of steam and non-condensable gas generation

Analysis result

Accident progression analyses have been performed using MAAP 4.0.6 code for 9 characteristic accident sequences in which both features of the diverse reactor cavity flooding system are available. It is identified from the analysis results that molten debris is appropriately cooled down in a reactor cavity water pool and no concrete erosion occurs for accident sequences in which molten debris drops into water pool. Very slight concrete erosion (i.e. less than 0.1 in.) occurs for an accident sequence in which coolant water is poured after molten debris spread on the dry reactor cavity floor. The coolability of debris for the cases that coolant water is available is confirmed through these calculations, and therefore, the first goal set earlier in this subsection on core debris coolability is considered satisfied. Accident progression analyses for 5 characteristic accidental sequences in which no continuous reactor cavity flooding means is available have also been performed using MAAP. It is concluded from the analysis results that the earliest possibility of complete erosion of the reactor cavity floor concrete (i.e. more than 40 in. erosion of concrete) is approximately 28 hours after onset of core damage. Furthermore, no containment failures due to overpressure are identified within 24 hours after onset of core damage from the 15 sequences addressed in this study. It is therefore concluded that containment integrity is maintained more than 24 hours after onset of core damage and accordingly the second and third goals set earlier in this subsection on containment integrity related to MCCI are satisfied.

Molten core spreading behavior is evaluated by FLOW-3D code. It is observed that molten core spreads very well on whole reactor cavity floor. The depth at most area is below the acceptance criterion of 25 cm (=10 in.) although the depth in very limited area mostly at adjacent of the reactor cavity wall exceeds 25 cm (=10 in.). However, the percentage of the area with over 25 cm (=10 in.) deposition is much less than 1% of the

reactor cavity floor. And thus it is considered that the fourth goal set earlier in this subsection on debris deposition thickness is sufficiently satisfied. Non-coolable possibility due to exceeding of the 25 cm (=10 in.) deposition is probabilistically treated in the Level 2 PRA study.

Sensitivity analyses in terms of the heat transfer between molten core and coolant water are performed and core debris coolability and MCCI progression are evaluated. It is concluded through the sensitivity analyses that the containment integrity is likely to be maintained more than 24 hours after onset of core damage for the current US-APWR design under conservatively estimated conditions. This conservatively estimated sensitivity analysis result supports the conclusion that the goals set in this subsection are satisfactorily met.

Finally, studies for concrete composition comparing basalt and limestone/common sand are performed. Regarding the containment failure due to concrete erosion, limestone/common sand concrete has clearly better characteristics to basalt concrete. Meanwhile, in terms of the containment failure due to overpressure, basalt concrete has moderately better characteristics to limestone/common sand concrete. However it is very difficult to judge the better design from the current understanding on core debris coolability and MCCI issues. It may be therefore concluded from this study that the selection of concrete type can be determined from the availability of the material at the location of plant construction.

19.2.3.3.4 High Pressure Melt Ejection

High pressure melt ejection (HPME) accident occurs when reactor vessel fails at high reactor coolant system (RCS) pressure. This physical phenomenon may lead to containment failure through two accidental events, direct containment heating (DCH) and rocket-mode reactor vessel failure. DCH is a phenomenon in which molten core is ejected into the reactor cavity driven by high reactor vessel pressure, followed by a rapid blowdown of primary system inventory. In the reactor cavity, the high speed steam stream entrains part of the discharged molten core into containment atmosphere in a form of fine aerosol particles, which may greatly enhance chemical reactions. Consequently the containment atmosphere is heated and pressurized. If not recovered or abated eventually this will cause containment failure. Rocket-mode reactor vessel failure is a phenomenon that may occur for reactor vessel without bottom penetrations when the vessel fails in a circumferential manner at the vessel periphery. An upward force is exerted on the upper portion of the vessel that is equal to the vessel pressure multiplied by the vessel cross-section. This force is postulated to fail the vessel holddown and accelerate the upper portion of the vessel up and through the containment dome, similar to an alpha-mode containment failure. Or this force may lift the whole reactor vessel body together with primary system loops, and this displacement of primary system loops could cause fall down of steam generators, and the consequent secondary system loop displacement could damage containment penetrations.

As HPME is a specific phenomenon for high RCS pressure scenario, the probability of HPME is significantly reduced by incorporation in the design of reliable RCS depressurization features. The US-APWR provides safety depressurization valves (SDV) as well as severe accident dedicated depressurization valves, which are independent of

SDVs, and hence the high pressure scenario is very unlikely to happen for the US-APWR.

Even if the depressurization of RCS fails, the consequences of postulated DCH are mitigated by the reactor cavity geometry and containment layout. The debris trap in the reactor cavity as well as no direct pathway to the upper compartment is provided for prevention of the impingement of debris on the containment shell. Complete prevention of debris dispersion from reactor cavity to upper compartment cannot be expected to be achieved as long as there is a drain pathway as the reactor cavity flooding system. However, since this pathway passes through SG loop compartment (between upper compartment and reactor cavity) which is not a straight path, and thus it is expected that a very limited amount of debris in a form of aerosol would reach the upper compartment. Accordingly the containment atmosphere temperature rise by the limited amount of core debris is not very significant.

As long as the debris dispersion to upper compartment due to HPME is very limited, the potential for deposition and accumulation of fine debris particulates in the recirculation suction line is also very limited. The potential plugging of the suction line caused by CSS recirculation can be considered negligibly small.

For rocket-mode reactor vessel failure, it is considered that this event is highly unlikely to happen. The percentage of high-pressure accident scenario contribution to the total CDF is evaluated very small. In addition, the potential failure mode for high-pressure scenario is a competence with RV breach, hot leg rupture or SGTR. Thus, no additional mitigation features are provided for this failure mode, instead probabilistic consideration is thoroughly performed through the Level 2 PRA.

Mitigation features

Mitigation features provided for the US-APWR to address HPME are:

- Depressurization valve
  - Reduces RCS pressure after core damage
- Core debris trap
  - Enhances capturing of ejected molten core in the reactor cavity
- Diverse reactor cavity flooding system
  - Provides reliable flooding of the reactor cavity

Summary of relevant studies and experiments

A summary of relevant studies and experiments about HPME is shown in Table 19.2-4.

Goals of analysis

For high pressure melt ejection and direct containment heating, no specific requirements are stated in the CFRs. The goals of analysis for high pressure melt ejection and direct

containment heating are therefore established below to adequately address severe accidents for the US-APWR design features in accordance with 10 CFR 52.47(a)(23) (Reference 19.2-1).

- Demonstrate that the capacity of depressurization valve is adequate and accordingly the potential of high pressure melt ejection is sufficiently low
- Investigate the ability of the debris trap so that a very limited amount of core debris is dispersed to the containment atmosphere. Accordingly show that the challenge by direct containment heating is acceptably low
- Demonstrate that the containment structure has sufficient capability to withstand the pressure rise due to direct containment heating

Analysis approach

In order to satisfy the goals of the analysis, the following analytical approaches are utilized:

- Perform severe accident progression analyses for scenarios related to RCS depressurization
  - Employ MAAP to evaluate the capacity of the depressurization valve to prevent high pressure melt ejection
- Evaluate the amount of core debris dispersion in relation to DCH
  - Investigate the amount of core debris dispersion in general through existing studies
  - Examine the applicability of existing studies to the US-APWR
- Investigate the containment structural capability
  - Conservatively assume the amount of core debris dispersion
  - Employ the two-cell equilibrium model to evaluate pressure rise due to DCH
  - Examine whether the containment structure has sufficient capability to withstand the pressure rise due to DCH
- Assume rocket-mode reactor vessel failure always cause containment failure and detailed analysis is not performed; instead this failure mode is probabilistically addressed in the Level 2 PRA

Analysis result

Accident progression analysis has been performed using MAAP 4.0.6 for the high pressure core melt scenario. It is assumed that the depressurization valve is opened 10 minutes after onset of core damage; the calculated primary system pressure decreases to 169 psia at RV failure. In the US-APWR Level 2 PRA, the cut-off pressure for

occurrence of HPME is defined as approximately 250 psia. This cut-off pressure is conservatively defined from an engineering judgment in accordance with the discussions such that an existing experiment cut-off pressure of debris dispersal is around 345 psi (Reference 19.2-7) and also 285 psi is typically used in Japanese analyses. Therefore, the capacity of the depressurization valve is sufficient to reduce the RCS pressure lower than the conservatively defined cut-off pressure for preventing high pressure melt ejection as well as subsequent direct containment heating.

The containment peak pressure has been calculated by the two-cell equilibrium model described in NUREG/CR-6075 (Reference 19.2-8) for a postulated direct containment heating phenomenon although it is confirmed that the capacity of depressurization valve is sufficient. A debris dispersal fraction of 5% is assumed based on previous studies and experiments. The containment peak pressure for a postulated direct containment heating condition is 74 psia, and this is sufficiently lower than the containment ultimate pressure 216 psia, described in Subsection 19.2.4.

Rocket-mode RV failure is considered to be a very remote possibility although it is assumed in the US-APWR design that the containment integrity cannot be maintained by this failure mode. Therefore, no specific analysis for this failure mode has been performed; instead, this failure mode is thoroughly reviewed probabilistically in the Level 2 PRA.

19.2.3.3.5 Fuel-Coolant Interaction

There are two aspects to consider in relation to fuel-coolant interaction, one is in-vessel steam explosion and the other is ex-vessel steam explosion.

19.2.3.3.5.1 In-Vessel Steam Explosion

In-vessel steam explosion is known as an initiation event causing alpha-mode containment failure and has been studied for many decades. Numerous studies are available on this issue including the conclusion of NUREG-1524 (Reference 19.2-9) by the NRC sponsored Steam Explosion Review Group. In that report, it is concluded that the potential for alpha-mode containment failure is negligible and the issue of this failure mode has been resolved from a risk point of view. The conclusion of NUREG-1524 is supported by the specialist meeting held in the following year of the report has been issued (Reference 19.2-10). The US-APWR design is very similar to existing PWR plants and therefore no new phenomena or configurations are considered to be introduced. Accordingly the conclusion of the NUREG-1524 study is applicable to the US-APWR. Thus, no mitigation features for in-vessel steam explosion are provided.

<u>Mitigation features</u>

No mitigation features are provided to address in-vessel steam explosion.

<u>Summary of relevant studies and experiments</u>

A summary of relevant studies and experiments about in-vessel steam explosion is shown in Table 19.2-5.

Goals of analysis

For in-vessel steam explosion, no specific requirements are stated in the CFRs. The goals of the analysis for in-vessel steam explosion below are therefore established to adequately address severe accidents for the US-APWR design features in accordance with 10 CFR 52.47(a)(23) (Reference 19.2-1).

- Confirm that in-vessel steam explosion is very unlikely
- Confirm that existing study results are applicable to the US-APWR

Analysis approach

In order to satisfy the goals of the analysis, the following analytical approaches are utilized:

- Examine existing studies
  - Investigate the likelihood of in-vessel steam explosion in general through existing studies
  - Examine the applicability of existing studies to the US-APWR
    - Occurrence potential of steam explosion depends on system pressure, temperature, and interaction between molten core and water in lower plenum
    - Challenge to containment in an in-vessel steam explosion is from the mechanical impact of the vessel head and any other portions of the vessel and internal are torn loose by the explosion
    - No significant differences are identified between the US-APWR and existing plants

Analysis result

NUREG-1524 by the NRC sponsored Steam Explosion Review Group concluded that the potential for alpha-mode containment failure is negligible and the issue of this failure mode has been resolved from risk point of view. In the Organization for Economic Cooperation and Development (OECD)/Committee on the Safety of Nuclear Installations (CSNI) specialists meeting (Reference19.2-10) held on the following year that NUREG-1524 was issued, it was concluded that no new information had been identified to question the conclusion of NUREG-1524. It was also concluded that alpha-mode containment failure has no importance with regard to risk.

The in-vessel steam explosion issue can broken down into a set of contributing physical processes, such as

- Melt relocation into the lower plenum

- Initial melt-water interactions leading to coarse breakup of melt and forming a pre-mixture
- Triggering of pre-mixture and energetic melt-water interactions
- Consequential loading of the lower head and its response
- Structural loads and response calculations.

Considering the above listed processes, no significant design differences are identified between the US-APWR and current four-loop PWR plants. The US-APWR has better characteristics such as lower power density. The US-APWR RV internal structure and primary system design is very similar to existing PWR plants and no new phenomena or configurations are considered to be introduced. Accordingly, the conclusions reached in the NUREG-1524 study are applicable to the US-APWR, and the challenge of alpha mode containment failure is considered negligible.

19.2.3.3.5.2 Ex-Vessel Steam Explosion

Ex-vessel steam explosion is one of the key issues to be resolved for the US-APWR design since the fundamental design concept for severe accident termination is to cool down molten core by reactor cavity coolant water. Therefore it is carefully reviewed and analytically demonstrated that the containment structure has sufficient capability to withstand the pressure load of an ex-vessel steam explosion. No mitigation features for ex-vessel steam explosion are provided for the US-APWR.

Mitigation features

No mitigation features are provided to address ex-vessel steam explosion.

Summary of relevant studies and experiments

A summary of relevant studies and experiments about ex-vessel steam explosion is shown in Table 19.2-5.

Goals of analysis

For ex-vessel steam explosion, no specific requirements are stated in the CFRs. The goals of analysis for ex-vessel steam explosion below are therefore established to adequately address severe accidents for the US-APWR design features in accordance with 10 CFR 52.47(a)(23) (Reference 19.2-1).

- Evaluate the shockwave impulse pressure if ex-vessel steam explosion occurs
- Demonstrate the containment structure has sufficient capability to withstand the shockwave pressure of postulated ex-vessel steam explosion and induced events by the load

Analysis approach

In order to satisfy the goals of the analysis, the following analytical approaches are utilized:

- Evaluate pressure load
  - Employ TEXAS-V for shockwave pressure prediction
  - Utilize MAAP calculation results to set the initial conditions for TEXAS-V
  - Perform sensitivity analyses to address inherent uncertainties
- Evaluate containment structural capability
  - Employ LS-DYNA to evaluate the structural capability of reactor cavity to withstand shockwave pressure from postulated steam explosion
  - Scope of this structural analysis includes
    - Reactor cavity wall
    - Reactor coolant pipes and nozzles
    - Reactor cavity sleeve structure
    - Extent of SG displacement
    - Containment penetration integrity

Analysis result

The accident scenario considered for ex-vessel steam explosion is a large break LOCA scenario. The accident sequence is that obtained with the following logic: large break LOCA + high pressure injection failure + accumulator injection success + CSS failure + firewater injection to reactor cavity success. This accident sequence is considered the most conservative in terms of occurrence possibility of steam explosion since the degree of subcooling of the reactor cavity water is expected to be very large and the thermal energy of molten debris is relatively high.

The MAAP code analysis result for this accident sequence has been employed as the initial condition for the TEXAS-V code to predict the shockwave pressure. The peak pressure by TEXAS-V is calculated as 1.23×10^4 psia. This time-dependent pressure is employed as the initial condition of a finite element model analysis employing LS-DYNA code for the reactor cavity structural capability. The analysis result by LS-DYNA shows that the maximum strain of the reactor cavity wall due to the shockwave pressure by steam explosion is within the range of elastic strain. The RV and RCS pipes displacement is evaluated as approximately 4 in., which is within the clearance of the sleeve 8 in. (nominal value). The maximum plastic strain of RCS pipes is approximately 1% observed at general pipe section. As the elongation criterion of general pipe material is less than 26%, it is concluded that structural capability of RCS pipes is maintained with sufficient margin. The extent of SG displacement due to RCS pipes displacement is therefore evaluated sufficiently small due to very tight anchor bolt holding. The

containment penetration integrity is accordingly expected to be maintained for this level of SG displacement.

It is confirmed that containment structural capability is maintained under these conservative assumptions for ex-vessel steam explosions. It is therefore concluded the containment structural capability will withstand the challenge posed by an ex-vessel steam explosion. Therefore, the goals set in the beginning of this subsection are fully met.

19.2.3.3.6 Containment Bypass

There are two aspects to consider in relation to containment bypass during a severe accident, one is temperature induced steam generator tube rupture and the other is intersystem loss of coolant accident.

19.2.3.3.6.1 Temperature Induced Steam Generator Tube Rupture

Temperature-induced SGTR is a postulated high primary system pressure accident. In high primary system pressure accident scenarios, temperature-induced SGTR competes with creep rupture induced failures of RCS piping at hot leg nozzles, surge line, or RV failure that leads to high pressure melt ejection. The severe accident dedicated depressurization valve contributes to prevention of temperature-induced SGTR as well as high pressure melt ejection.

Mitigation features

Mitigation features provided for US-APWR to address temperature-induced SGTR are:

- Depressurization valve
  - Reduces RCS pressure after core damage

Summary of relevant studies and experiments

A summary of relevant studies and experiments about temperature-induced SGTR is shown in Table 19.2-6.

Goals of analysis

For temperature-induced SGTR, no specific requirements are stated in the CFRs. The goals of analysis for temperature-induced SGTR are therefore established below to adequately address severe accidents for the US-APWR design features in accordance with 10 CFR 52.47(a)(23) (Reference 19.2-1).

- Demonstrate that the capacity of the depressurization valve is sufficient and that the potential of temperature-induced SGTR is acceptably low

Analysis approach

In order to satisfy the goal of the analysis, the following analytical approaches are utilized:

- Perform severe accident progression analyses for scenarios related to RCS depressurization
  - Employ MAAP to analyze RCS high pressure scenarios
  - Evaluate the capacity of depressurization valve to prevent temperature-induced SGTR
- Examine existing studies
  - Examine the applicability of existing studies to the US-APWR

Analysis result

Accident progression analysis has been performed using MAAP 4.0.6 for the high pressure core melt scenario by assuming that the depressurization valve is manually opened 10 minutes after the onset of core damage. For an accident assuming main steam line break, it is calculated that primary system pressure decreases to 169 psia, when the SG secondary system is at atmospheric pressure. Therefore the anticipated pressure difference between primary system and secondary system for the most severe case is approximately 155 psi. This pressure difference can be considered insignificant in terms of the material properties, and hence it is confirmed through this analysis that the capability of depressurization valve is sufficient.

The US-APWR provides the safety depressurization valve as well as the depressurization valve. The safety depressurization valves (SDV) are provided in order to prevent a severe accident. The depressurization valve is provided as a backup system of SDV, and these systems are independent each other. Therefore the RCS depressurization feature, which consists of SDV and depressurization valve, is highly reliable. The existing literature shows that the probability of temperature-induced SGTR occurrence is high when the RCS is not depressurized and the SG secondary side is depressurized. The capacity of the depressurization valve is considered sufficient to reduce RCS pressure for preventing temperature-induced SGTR. However temperature-induced SGTR includes inherently high uncertainty and it is still controversial on the occurrence of this phenomenon. Therefore, temperature-induced SGTR is carefully addressed in the Level 2 PRA and probabilistically considered about the challenge to the large release of radioactive materials.

19.2.3.3.6.2 Intersystem Loss of Coolant Accident

Intersystem loss of coolant accident is considered resolved for the US-APWR design as discussed in Subsection 19.2.2.5. No further discussion is therefore provided here.

19.2.3.3.7 Equipment Survivability

10 CFR 50.34(f)(2)(ix)(C) (Reference 19.2-5) requires that “Equipment necessary for achieving and maintaining safe shutdown of the plant and maintaining containment integrity will perform its safety function during and after being exposed to the environmental conditions attendant with the release of hydrogen generated by the equivalent of a 100% fuel-clad metal water reaction including the environmental

conditions created by activation of the hydrogen control system." 10 CFR 50.34 (f)(2)(xvii) (Reference 19.2-5) requires instrumentation to measure, record and readout in the control room: containment pressure, containment water level, containment hydrogen concentration, containment radiation intensity (high level), and noble gas effluents at all potential, accident release points. 10 CFR 50.34(f)(2)(xix) (Reference 19.2-5) also requires instrumentation adequate for monitoring plant conditions following an accident that includes core damage. 10 CFR 50.34(f)(3)(v) (Reference 19.2-5) requires that "Containment integrity will be maintained during an accident that releases hydrogen generated from 100% fuel clad metal-water reaction accompanied by either hydrogen burning." 10 CFR 50.44(c)(3) (Reference 19.2-6) similarly requires that "Containments that do not rely upon an inerted atmosphere to control combustible gases must be able to establish and maintain safe shutdown and containment structural integrity with systems and components capable of performing their functions during and after exposure to the environmental conditions created by the burning of hydrogen. Environmental conditions caused by local detonations of hydrogen must also be included, unless such detonations can be shown unlikely to occur. The amount of hydrogen to be considered must be equivalent to that generated from a fuel clad-coolant reaction involving 100 percent of the fuel cladding surrounding the active fuel region."

The functions of equipment in containment for which credit is taken in the US-APWR PRA are reviewed to determine if the equipment is required to operate under severe accident environment and beyond design basis limits, including the effect of pressure, temperature, humidity, etc. especially under the conditions created by hydrogen burning. The US-APWR design considers the following attributes:

- Containment systems credited for severe accident mitigation in the US-APWR Level 2 PRA
- Accident conditions considered in the Level 2 PRA
- Functional performance success criteria in the Level 2 PRA, including the timeframe necessary to be functional
- Design requirements relative to environmental conditions, such as pressure, temperature, humidity, etc.

Goals of analysis

The goal of the analysis for equipment survivability is to meet the following requirement:

- Demonstrate the equipment survivability of systems and components to maintain safe shutdown and containment structural integrity under the environmental conditions created by hydrogen burning (10 CFR 50.44(c)(3) (Reference 19.2-6))

Summary of relevant studies and experiments

A summary of relevant studies and experiments about equipment survivability is shown in Table 19.2-7.

Analysis approach

In order to satisfy the goals of analysis, the following analytical approaches are utilized:

- Determine the scope of analysis
  - Identify time frames necessary to consider in accordance with accident progression
  - Identify key systems and components to be examined during design certification stage
- Perform severe accident progression analysis
  - Employ MAAP to analyze representative accident scenarios to generate input conditions for GOTHIC analysis
  - Employ GOTHIC to analyze environmental conditions especially for hydrogen combustion
- Examine equipment survivability for design certification stage
  - Investigate availability of systems and components under calculated environmental conditions
  - Evaluate the effectiveness of systems and components

Analysis result

During accident conditions, key systems and components are maintained with the most appropriate set of mitigation measures.

The key systems and components are selected by considering:

- The time frame of the severe accident progression, i.e. when the system or components are expected to be functional,
- The location that equipment and instrumentation are arranged, i.e. at inside or outside of containment,
- The significance of evaluations, i.e. if the system is backed up by alternative measure, etc.

The time frames for equipment survivability are classified in accordance with the characteristic stages of the severe accident progression. Classification of the time frames enables limits to be placed on the equipment to be assessed for the survivability evaluation.

- T0: before core uncovered

  T0 is defined as the time frame that the reactor core is intact and the environmental conditions in the containment are within the envelope of the DBA conditions.

- T1: from core uncovered to core damage

  In this time frame. the reactor core is overheated and hydrogen generation starts due to cladding-water interaction. However. the environmental conditions in the containment are almost the same as in T0. The amount of hydrogen generation is limited and hence the impact of hydrogen burn to equipment functionality is not significant.

- T2: from core damage to reactor vessel failure

  In this time frame, fission products are released from the fuel to the RCS and hydrogen is rapidly generated. These physical phenomena are both caused by core damage. The decay heat and oxidation heat promote core degradation. Consequently, core material then relocates to the lower plenum if water is not injected into the reactor vessel. However, the environmental conditions in the containment are not harsh yet, i.e. the containment pressure at vessel failure is likely to be below the design pressure regardless of the containment cooling system condition. Hydrogen release to the containment atmosphere is very likely in this time frame. Therefore, the influence of containment temperature rise due to hydrogen burn must be evaluated.

- T3: after reactor vessel failure

  In this time frame, rapid hydrogen generation is expected immediately after reactor vessel failure because un-oxidized metal in the molten core reacts with water in the reactor cavity. After this transient oxidation event, hydrogen may be continuously generated due to molten core concrete interaction (MCCI) although at a much slower rate. Hydrogen generation from MCCI occurs if the reactor cavity is not flooded. When the reactor cavity is sufficiently flooded, the possibility of MCCI is considered low. The amount of hydrogen generated in this time frame is considered significant so that the impact of hydrogen burn must be evaluated.

The equipment survivability assessment is performed considering the following two criteria:

(1) The SSCs or parameters needed in the T2 and T3 time frames

(2) Equipped location is either in the RCS or inside the containment

Equipment and instruments are screened out from the survivability assessment in accordance with the following three criteria:

(1) The function of equipment and instruments are not directly related to the prevention of containment failure or fission product release.

(2) Alternative countermeasures are available

(3) Equipment is static and robust

The equipment and instruments necessarv to function in each time frame are tabulated in Table 19.2-10.

The selected systems and components include containment penetrations, hydrogen igniters, depressurization valves used for severe accident mitigation, and containment pressure sensor (wide range).

Systems / Components	Timeframe required to be functional
(1) Containment penetration	After core damage (T2 and T3)
(2) Hydrogen igniter	After core damage (T2 and T3)
(3) Depressurization valve	After core damage untill reactor vessel failure (T2)
(4) Containment pressure sensor (wide range)	After core damage (T2 and T3)

An environmental condition under hydrogen burning by hydrogen ignition system operation has been evaluated using GOTHIC code. Detailed evaluation results are described in Section 15.7 of the PRA technical report “US-APWR Probabilistic Risk Assessment” (Reference 19.2-15). The environmental conditions that the above four systems/components must satisfy follow.

(1) Containment penetration

Based on the following screening evaluation, the containment penetrations that are subject to the equipment survivability study under the hydrogen burn condition can be limited to the electrical penetrations that provide power to the hydrogen igniters and the depressurization valves.

There are two major functions provided by containment penetrations; (1) provide the continuity of in-line, process flow paths between inside and outside containment across the containment boundary; and (2) maintain containment integrity at the location of the penetration. There are two basic types of containment penetrations; one for mechanical processes and one for electrical processes.

MHI has evaluated the environmental conditions created by a local hydrogen burn. The results indicate that the pressure rise is not expected to be significant. In general, the peak pressure has been determined to top-out below the containment design pressure of 68 psig. On the other hand, the local temperature rise is significant and in some locations the temperature rise could be as much as 1200°F. A high ambient temperature may not impact the containment integrity function at the penetration, but could impact the in-line process flow path function, especially for electrical penetrations.

Mechanical containment penetrations are robust by nature because they are made from heavy gauge metal, are firmly welded to the containment liner and can withstand excessive temperatures and pressures. Electrical containment penetrations are also robust in terms of containment integrity, but must be evaluated in terms of the SA survivability requirement for the in-line process flow path function, i.e., electrical current.

It is important to identify which electrical circuits that penetrate containment have functions that are fundamental to establish and maintain safe shutdown and containment

structural integrity. Two circuits have been identified that serve components or systems with these functions; the circuits to the hydrogen igniters and the depressurization valves. As a result, the electrical penetrations which provide power to the hydrogen igniters and the depressurization valves are subject to the survivability study.

The highest temperature reached at the location of these electrical penetrations is evaluated to be less than 400°F, and the steady-state temperature is evaluated at about 200°F. The containment design temperature is 300°F. The highest pressure reached at the location of these electrical penetrations is evaluated to be approximately 50 psig, which is lower than the containment design pressure of 68 psig. The amount of hydrogen burned in this analysis is conservatively assumed to be 100% of the active fuel length cladding reaction. Hence, this analysis is conservative and brackets the various uncertainties involved in the hydrogen generation and burn calculation.

Based on the evaluation above, the environmental conditions that the electrical containment penetration must survive while maintaining containment integrity and supplying electricity to the circuits for the hydrogen igniters and depressurization valves are the containment design pressure of 68 psig and design temperature of 300°F for 24 hours, including consideration for an instantaneous temperature rise of 400°F due to a hydrogen burn.

(2) Hydrogen igniter

The hydrogen igniters can perform its function during and after exposure to the environmental conditions created by hydrogen burn. Through the equipment survivability study, it is evaluated that the peak temperature of containment atmosphere becomes as high as approximately 1200°F, and the temperature rise from 400°F and reduced back to 400°F due to hydrogen burn takes approximately 10 minutes. The amount of hydrogen burnt in this analysis is conservatively assumed to be 100% active fuel length cladding reaction, hence this analysis broadly covers various uncertainties involved in the hydrogen generation and burn.

Therefore, in terms of the equipment survivability, it is required that the hydrogen ignition system must keep its function longer than 10 minutes under the condition of containment atmosphere higher than 400°F and with a peak temperature as high as 1200°F.

(3) Depressurization valve

Severe accident scenarios have been further evaluated in the equipment survivability study to determine when and under what conditions the functioning of the depressurization valve (DV) is considered necessary to establish and maintain safe shutdown and containment structural integrity. LOCA scenarios are eliminated because the initiating event depressurizes the RCS, and only transient scenarios resulting in high RCS pressure need be considered. Accordingly, it is concluded that the hydrogen burn condition does not directly affect DV function, which is to depressurize RCS after the core is significantly damaged. Potential hydrogen release paths from RCS during transient events include a pathway via the pressurizer relief tank (PRT), the failure of the RCPB, or the opening of the DV. The hydrogen release from the PRT and the associated hydrogen burn has a negligible effect on the DV, since the compartment where the PRT is located is apart from the location where the DV is located. Therefore, a hydrogen burn in the PRT

compartment has very little influence on the functionality of the DV. Hydrogen release from a failure of the RCPB and the associated hydrogen burn may impact the functionality of the DV. However, the RCPB release simultaneously depressurizes the RCS, and hence the DV is not required for these accident scenarios. Hydrogen release via the opening of the DV and the associated hydrogen burn has the most significant impact on the functionality of the DV. Because a large amount of hydrogen is released via the opening of the DV, the atmosphere surrounding the DV becomes hydrogen-rich. This hydrogen is burned by the hydrogen igniters located near the DV. In such cases, the DV may encounter severe environmental conditions created by the hydrogen burn. However, after the DV is opened and hydrogen is released to the containment, the DV is not required to function. The DV is only operated under severe accident conditions, in which the core has already been significantly damaged. Under such situations, the capability to close the DV is not required.

Considering the discussion above, the function of the DV to open is not adversely affected by hydrogen burns from the hydrogen released by the PRT or the RCPB. The function of the DV to open is not adversely affected by the hydrogen burn from the hydrogen released by the DV since the function to open has already been fulfilled and the DV is open.

(4) Containment pressure sensor (wide range)

The highest temperature at the location of the containment pressure sensor (wide range) is evaluated slightly below 800°F and the temperature rise from 400°F and reduced back to 400°F due to hydrogen burn takes approximately 2 minutes. The highest pressure evaluated from this study is approximately 50 psig, which is lower than the containment design pressure of 68 psig. The amount of hydrogen burnt in this analysis is conservatively assumed to be 100% active fuel length cladding reaction, hence this analysis widely covers various uncertainties involved in the hydrogen generation and burn.

Considering the above findings, the environmental condition required for the containment pressure sensor (wide range) is that it must function for longer than 2 minutes under 400°F atmosphere, with the instantaneous temperature rise due to hydrogen burn having peak temperature as high as 800°F.

The COL Applicant is responsible for providing a milestone for completing the equipment survivability assessment of the as-built equipment required to maintain safe shutdown and containment structural integrity to provide reasonable assurance that they will operate in the environmental conditions resulting from hydrogen burns associated with severe accidents for which they are intended and over the time span for which they are needed. This assessment is required only for equipment used for severe accident mitigation that has not been tested at severe accident conditions. The ability of the as-built equipment to perform during severe accident hydrogen burns will be assessed using the Environment Enveloping method or the Test Based Thermal Analysis method discussed in EPRI NP-4354 (Reference 19.2-11).

Existing experiments and the literature (References 19.2-11, 19.2-12, and 19.2-13) are also appropriately considered to evaluate US-APWR equipment survivability.

19.2.3.3.8 Long-term Containment Overpressure

The US-APWR containment is cooled and depressurized primarily by the CSS during a postulated severe accident. The CSS which supplies coolant water from the RWSP is automatically activated upon detecting High-3 containment pressure. Accordingly, the containment pressure is limited to less than the design pressure during a severe accident. In case the CSS is not functional, the US-APWR provides diverse mitigation features against challenges by containment overpressure. One is alternate containment cooling by containment fan cooler system. This is a system to depressurize containment by promoting natural circulation in containment. The containment fan cooler system is a system provided to stabilize the containment environmental condition during normal operation through forced air circulation by fan. However, the electrical power of fan may not be available during a severe accident. Natural circulation is instead credited to adequately mix the containment atmosphere. The containment fan cooler system employs non-essential chilled water as the coolant under normal operation. Since this non-essential chilled water may not be available under severe accident conditions, the system line-up is switched from the chilled water system to the CCW system which supplies CCW to the containment fan cooler units as coolant. Although CCW is not as cold as chilled water, it is sufficiently colder than the containment atmosphere under severe accident conditions. This temperature difference between the containment fan cooler units and containment atmosphere causes condensation of surrounding steam. This condensation mechanism promotes more natural circulation flow because of the pressure difference due to condensation of steam. This enhances continuous containment depressurization.

The firewater system is also utilized to promote condensation of steam. The firewater system is lined up to the containment spray header when the CSS is not functional, and provides water droplet from top of containment. This temporarily depressurizes containment. However, the firewater system does not contain a heat exchanger, and thus has no ability to remove heat from containment to terminate the containment pressurization. Instead, this design feature can be expected to temporarily increase the heat sink in containment and extend the critical time of containment failure.

Goals of analysis

For long-term containment overpressure, no specific requirements are stated in the CFRs. The goals of the analysis for long-term containment overpressure are therefore established below to adequately address severe accidents for the US-APWR design features in accordance with 10 CFR 52.47(a)(23) (Reference 19.2-1).

- Demonstrate the effectiveness of diverse mitigation features against containment overpressure
- Demonstrate that containment withstands pressurization for more than 24 hours following the onset of core damage

Mitigation features

Mitigation features provided for the US-APWR to address long-term containment overpressure are:

- Large volume containment
  - Provides sufficient capability to withstand overpressure
- Containment spray
  - Provides primary function to mitigate containment overpressure
- Alternate containment cooling by containment fan cooler system
  - Enhances condensation of surrounding steam by natural convection
- Firewater injection to spray header
  - Delays containment failure (no heat removal)

Summary of relevant studies and experiments

A summary of relevant studies and experiments about long-term containment overpressure is shown in Table 19.2-8.

Analysis approach

In order to satisfy the goals of the analysis, the following analytical approaches are utilized:

- Perform severe accident progression analyses
  - Employ MAAP to evaluate the effectiveness of mitigation features
    - Containment cooling by containment spray
    - Alternate containment cooling by containment fan cooler system
    - Firewater injection to spray header
- Examine containment structural capability
  - Investigate whether containment integrity is maintained for more than 24 hours following the onset of core damage

Analysis result

Accident progression analyses have been performed using MAAP 4.0.6 as part of the Level 2 PRA analysis for the PDSs. It is found that even if the containment heat removal system is not available, the containment vessel can withstand pressurization for more than 24 hours following the onset of core damage.

The performance of alternate containment cooling by containment fan cooler system has been analyzed by MAAP 4.0.6. The heat removal characteristics of the system are modeled as a function of containment atmosphere temperature based on the experimental results performed using a real containment fan cooler unit on heat removal

efficiency under natural circulation conditions. The environmental conditions applied to this system performance analysis are separately calculated utilizing MAAP code. For the system performance analysis, it is assumed that the alternate containment cooling system is activated when multiple failures of CS system occur and the containment pressure rises over the design pressure of 83 psia (68 psig). It has been confirmed through the MAAP analysis results that the containment peak pressure is approximately 117 psia (102 psig), which is much lower than the ultimate pressure 216 psia (201 psig), and hence, containment integrity is maintained. In addition, it is concluded that CS and firewater spray are effective to depressurize containment vessel.

19.2.3.3.9 Other Severe Accident Mitigation Features

Mitigation features for specific severe accident phenomena addressed for the US-APWR design have been discussed. In addition, there are several requirements to mitigate accidental conditions in general, stated in 10 CFR 50.34(f) (Reference 19.2-5).

10 CFR 50.34(f)(2)(vi) requires the design to "Provide the capability of high point venting of noncondensible gases from the RCS, and other systems that may be required to maintain adequate core cooling. Systems to achieve this capability shall be capable of being operated from the control room and their operation shall not lead to an unacceptable increase in the probability of LOCA or an unacceptable challenge to containment integrity." In order to satisfy this requirement, the US-APWR provides RV head vent valves. Detailed design description of this valve is presented in Chapter 5.

10 CFR 50.34(f)(3)(iv) requires to "Provide one or more dedicated containment penetrations, equivalent in size to a single 3-foot diameter opening, in order not to preclude future installation of systems to prevent containment failure, such as a filtered vented containment system." In order to satisfy this requirement, a dedicated containment penetration with the size as specified above requirement is provided. This penetration can be shared with the containment high volume purge system described in Chapter 9 and does not preclude the future usage of systems such as a filtered vent.

19.2.4 Containment Performance Capability

19.2.4.1 Evaluation of the Containment Ultimate Capacity

<u>Goals of analysis</u>

Requirements for the analysis and evaluation used to estimate the containment internal pressure capability (i.e., ultimate pressure capability) are below listed documents:

- 10 CFR 50.34(f)(3)(v)(A)(1), which states that "Containment integrity will be maintained (i.e., for concrete containments by meeting the requirements of the ASME Boiler Pressure Vessel Code, Section III, Division 2 Subsubarticle CC-3720, Factored Load Category, considering pressure and dead load alone) during an accident that releases hydrogen generated from 100% fuel clad metal-water reaction accompanied by either hydrogen burning or the added pressure from post-accident inerting assuming carbon dioxide is the inerting agent."

- RG 1.7 Rev. 3 states that "Concrete containments meet the requirements of the ASME Boiler Pressure Vessel Code, Section III, Division 2, Subsubarticle CC-3720, Factored Load Category, considering pressure and dead load alone.

Analysis approach

This analysis is performed through the characteristic consideration of containment elements, such as found in the containment body and penetrations. Included are:

- Containment cylindrical shell
- Upper dome
- Equipment hatch
- Personnel airlock
- Penetrations
- Discontinuity

The aim of this study is to determine the containment failure pressure as realistically as possible. The analysis is therefore expected to be performed on a best-estimate basis without any safety factors and conservative biases or assumptions. However, the specific design information of each element given at DC stage to perform detailed FEM model evaluation is very limited for identification of failure mode, location and point-estimate pressure capacity. Hence, this analysis at DC stage is performed by assuming the weakest elements of containment. PCCV basically consists of a cylindrical shell with a hemispherical upper dome and a flat floor. Discontinuities are identified at the interface of cylindrical shell and upper dome, the ring guarder section, etc. However the degree of these discontinuities is not significant compared to other interfaces such as between the wall and floor. This analysis conservatively assumes containment failure at containment shell yield, where the strains and deflections are small. Therefore the failures at local penetrations which are induced by larger plastic strains do not occur at the small yield strains. In addition, major penetrations are considered stronger than general containment wall since the thickness of penetration wall area is thicker than general wall thickness, besides they are strengthened by additionally embedded reinforcing steels. It is therefore assumed in this study that cylindrical shell limits the capacity of whole containment, and nominal containment capacity under severe accident conditions (assuming 400~600°F) is predicted.

Analysis result

This analysis is limited on the static pressure load by slow pressurization and the dynamic pressure load due, for example to violent hydrogen detonation, is not considered.

The ultimate pressure is predicted by summation of each multiplication of the cross sectional area and yielding stress of rebar, tendon, and liner plate. It is considered a very conservative assumption to apply the yielding stress of each material to predict ultimate pressure. In terms of the material property of carbon steel, there is no significant deterioration on strength for temperatures around 400°F~600°F. It is therefore a

conservative assumption even though the temperature dependency is neglected. In addition, tendon and rebar are embedded in concrete and thus not influenced greatly by the surrounding temperature due to lower thermal conductivity of concrete. These considerations indicate that the ultimate pressure is 216 psia (201 psig).

According to RG 1.136 (Reference 19.2-14), it is necessary to evaluate that the containment maintains integrity to the following load:

D + Pg1 + Pg2 where
D = Dead load
Pg1 = Pressure resulting from an accident that releases hydrogen generated from 100% fuel clad metal-water reaction
Pg2 = Pressure resulting from uncontrolled hydrogen burning

The allowable strain of the PCCV liner plate specified in ASME Article CC-3720 (Reference 19.2-70) for a Factored Load Condition is 3000μ, or 0.3%. The PCCV internal pressure which produces 0.3 % strain in the liner plate is calculated as follows.

The initial pre-stressing force applied to the US-APWR PCCV is equivalent to a minimum of 1.2 times the design pressure. Compressive strains are introduced to rebar and liner plate due to the pre-stressing force before pressurization.

Therefore, if internal pressure would be increased, strain of the rebar and liner plate will become 0 (zero) at the pressure of 1.2 times the design pressure. Then the internal pressure will increase further, tensile strains of the rebar, liner plate and tendons will increase.

The increase of internal pressure which will cause an increase in the strain of the rebar, liner plate and tendons equal to 0.3% is calculated below. All calculation is performed at the mid-height of the PCCV cylinder in the hoop stress direction, which should be critical for internal pressure.

1. Basic Conditions

   1) PCCV Design Pressure
      Pd = 68 psig

   2) Internal Pressure at the Factored Load
      D + Pg1 + Pg2 = 177.1 psia = 162.4 psig

   3) PCCV Inside Radius
      R = 895 inch

   4) Material Properties (Reference 19.2-70)
      (Tendon : ASTM A416 Grade 1860 #15)

Modulus of elasticity	Et = 28,000 ksi
Sectional area per unit height	At = 0.5907 in^2/in
Yield strength	σyt = 243,000 psi

(Rebar : ASTM A615 Gr. 60)

Modulus of elasticity	Er = 29,000 ksi
Sectional area per unit height	Ar = 0.5 in^2/in
Yield strength	σyr = 60,000 psi
Yield strain	Єyr = σyr / Er = 0.207 %

(Liner plate : ASTM A516 Gr. 60)

Modulus of elasticity	El = 29,000 ksi
Sectional area per unit height	Al = 0.25 in^2/in
Yield strength	σyl = 27,300 psi
Yield strain	Єyl = σyl / El = 0.094 %

2. Calculation of the Internal Pressure which produces 0.3 % Strain in the Liner Plate

   1) Calculation of the increase of internal pressure which will cause increase of the strain of the rebar, liner plate and tendons equal to 0.3%

      Because 0.3% strain exceeds yield strains of the rebar and liner plate, they are assumed to be yielded. The increase of sustained force per unit height by the tendon, rebar and liner plate (dNt, dNr and dNl) equivalent to the increase of their strains equal to 0.3% are:

Tendon	dNt = 0.003 × Et × At = 49,619 p/in
Rebar	dNr = σyr × Ar = 30,000 p/in
Liner	dNl = σyl × Al = 6,825 p/in

      The increase of internal pressure, which causes the increase of the above forces (dP) is:

      dP = (dNt + dNr + dNt) / R = 96.59 psig

   2) Internal pressure, which produces 0.3 % strain in the liner plate

      The internal pressure which produces 0.3 % strain in the liner plate (P) is:

      P = 1.2 × Pd + dP = 178.19 psig

The internal pressure P=178.19 psig, which produces 0.3 % strain in the liner plate is greater than the internal pressure D + Pg1 + Pg2 = 162.4 psig at the Factored Load. This means that the strain due to the pressure at the hydrogen burn is below the allowable limit of ASME CC-3720 (Reference 19.2-70).

19.2.4.2 Review of the Containment Performance Goal

Discussions on the containment performance goals are identified in SECY-90-016 (Reference 19.2-2) and SECY-93-087 (Reference 19.2-3). The staff's recommendations on the containment performance goals in these documents have been approved by the commission in the associated SRMs. The staff's recommendations are interpreted in the

latest standard review plan as “a deterministic goal that containment integrity be maintained for approximately 24 hours following the onset of core damage for the more likely severe accident challenges, and a probabilistic goal that the conditional containment failure probability be less than approximately 0.1 for the composite of all core damage sequences associated in the PRA.”

Regarding the deterministic goal, it is carefully examined in Subsection 19.2.3, severe accident mitigation, in accordance with the conservatively estimated ultimate capability, 216 psia (201 psig), obtained in the above section. Specifically in Subsection 19.2.3.3, severe accident issues on hydrogen combustion, core debris coolability, MCCI, steam explosion, DCH, and long-tem decay heat removal are discussed focusing on challenges to the containment integrity. It is confirmed through the analyses that the containment integrity is maintained for more than 24 hours following the onset of core damage for all the severe accident conditions listed above. These severe accident issues fully cover the discussions identified in SECY-90-016 and SECY-93-087. Accordingly the deterministic goal suggested by the staff is sufficiently met for the current US-APWR severe accident mitigation design.

Regarding the probabilistic goal, it is carefully examined in Section 19.1, probabilistic risk assessment. Specifically in Subsections from 19.1.4 to 19.1.6, internal event at power, external event at power and LPSD are discussed, respectively. In these analyses, the CCFP of the internal event at power is calculated as 0.10, achieved the probabilistic goal that the CCFP be less than approximately 0.1, suggested in the R.G. 1.206. However the CCFP for the composite of all core damage sequences assessed in the US-APWR PRA, which additionally include external events and LPSD, is calculated as 0.21. This CCFP value exceeds the suggested goal 0.1. However this is because the total CDF of the US-APWR achieves comparatively low by implementing such substantial countermeasures as described in Subsection 19.1.3.1, and accordingly the total CCFP becomes relatively high. In addition, the conservative assumption in the Level 2 PRA for LPSD condition, as the CCFP is one, contributes to enlarge the CCFP. If the LPSD condition is excluded from the consideration, the subtotal CCFP is calculated as 0.16. The excess of the total CCFP to the goal is not very significant and satisfactorily acceptable.

Noticeably, the CCFP of the internal events for operations at power satisfies the suggested probabilistic goal. This explicitly shows that the severe accident mitigation features provided for the US-APWR is sufficiently effective to achieve the level of safety expected for the evolutionary plant.

19.2.5 Accident Management

Accident management includes those actions taken during the course of an accident by the plant operating and technical staff to: (1) prevent core damage; (2) terminate the progress of core damage if it begins and retain the core within the RV; (3) maintain containment integrity as long as possible; and (4) minimize offsite releases (Reference 19.2-16). Accident management extends the defense-in-depth principle to plant operating staff by extending the operating procedures well beyond the plant design-basis into severe fuel damage regimes, and by making use of existing plant equipment and operator skills and creativity to terminate severe accidents and limit offsite releases. The US-APWR design incorporates accident management approaches in the severe accident regime and is articulated in the present subsection.

As discussed in Subsections 19.2.2 and 19.2.3 of the DCD, while the US-APWR has enhanced features for the prevention and mitigation of severe accidents, accident management remains an important element of defense-in-depth. Essential features of accident prevention and mitigation in the US-APWR design are basically the same as in operating reactors and have greater diversity of countermeasures. Accident management is used to relieve the operators of the need for rapid decisions based on operator skills and creativity, and permit greater reliance on support from outside sources, within a proceduralized guidance. The severe accident management framework discussed below as well as the important PRA assumptions and insights summarized in Table 19.1-119 are extensively addressed in the US-APWR accident management guidelines, including Emergency Response Guideline, Severe Accident Management Guideline, etc. developed by a COL applicant.

Severe Accident Management Framework

The US-APWR applicant develops a severe accident management framework to guide the COL Applicant in the development of plant-specific accident management procedure for the US-APWR design. This accident management procedure discusses the anticipated structure for the decision-making process, the goals to be accomplished in accident management, a summary of possible strategies for the US-APWR accident management, and potential adverse impacts of accident management strategies. A severe accident management guideline includes:

- An approach for evaluating plant conditions and challenges to plant safety functions;
- Operational and phenomenological conditions that may influence the decision to implement a strategy, and which will need to be assessed in the context of the actual event; and
- A basis for prioritizing and selecting appropriate strategies, and approaches for evaluating the effectiveness of the selected actions.

The following countermeasures and operating actions are addressed in the US-APWR severe accident management framework in accordance with the NRC guidance specified in the Reference 19.2-16.

(1) To prevent core damage

(During operations at power)

Key function of accident management to prevent core damage is to keep the core in a condition covered by coolant water. During operations at power, this includes core cooling, secondary cooling, containment cooling, isolation of containment bypass path, power supply, and component cooling. Countermeasures and operator actions for each function are described below.

- Accident management of core cooling function is to prevent core damage in case of LOCA and loss of safety injection. The CS/RHR pump has the function to inject the water from RWSP into the cold leg piping by switching over the CS/RHR pump

lines to the cold leg piping (i.e. alternate core cooling operation). If all of safety injection systems are not available, operators are required to switch over the RHRS lines to the cold leg injection.

- Accident management of secondary cooling function is to prevent core damage in case of non-LOCA events. If emergency feedwater pumps cannot feed water to two intact SGs, operators are required to attempt to open the cross tie-line of emergency feedwater pump discharge line in order to feed water to two or more SGs by operable pumps. In case of loss of all feedwater and SG secondary side dried-out, operators are required to initiate the feed and bleed operation by starting the safety injection pump and opening the safety depressurization valve.

- Accident management of alternate containment cooling function is to prevent core damage in case of LOCA and loss of containment spray. This feature actually prevents containment failure before core damage, but not core damage itself. If containment fails before core damage, containment temperature and pressure immediately decrease and coolant water, which is very likely to be in steam state under this condition, is rapidly lost, and eventually core damages. The containment fan cooler system is utilized as alternate containment cooling by promoting natural circulation in containment. If CSS is not activated when containment pressure monitor detects that the pressure reaches the design pressure, operators are required to switch the cooling water supply from the chilled water system to the CCW system.

- Accident management of the isolation of containment bypass path is to prevent core damage in case of SGTR and failure of ruptured SG isolation. In case of SGTR and if MSIV or turbine bypass valves (TBV) are failed to close, operators are required to close the valves, which are manual-handling valves installed upstream of TBV, in order to isolate the failed SG.
  If ruptured SG cannot be isolated, operators are required opening safety depressurization valves and intact SG secondary forced cooling with opening main steam depressurization valves to depressurize RCS. After that, it is required to connect RHR system to move into heat removal with RHR operation mode.
  If it is failed to move RHR operation mode, operators are required feed and bleed operation by starting the safety injection pump and opening the safety depressurization valve.

- Accident management of power supply is to prevent core damage in case of loss of offsite power and complete loss of emergency ac power. If both offsite power and emergency ac power are lost, operators are required to connect alternate ac power to the emergency bus.

- Accident management of component cooling function is to prevent core damage in case of loss of CCW. Either non-essential chilled water system cooling tower or fire protection water supply system provides alternate component cooling water to charging pumps in order maintain RCP seal water injection. Operator action is required to connect non-essential chilled water system cooling tower or fire protection water supply system to component cooling water line to charging pumps, and supply alternate component cooling water to charging pumps.

(During LPSD operations)

During LPSD operations, accident management functions to prevent core damage include gravitational water injection from SFP, activation of safety injection system, recovery of RCS water level by utilizing charging pumps, heat removal through the secondary system including reflux cooling, and RHR isolation.

- If loss of coolant water through RHRS is identified, operators are required to manually isolated the failed RHR train and stop leakage of coolant water.
- Malfunction of RHR pumps may be because of decrease of RCS water level. If the water level in the RCS is insufficient for RHR pump suction, RHR pumps are forced stopped in order to avoid failure due to cavitations. Operators are required to control the CVCS charging pumps to provide water to recover the RCS water level, accordingly the RHR function recovers. This charging injection is also expected for the decay heat removal. In parallel, operators are required to establish the lineup between RWSP and RWSAT to continuously provide source for CVCS. Water supply from RWSP to RWSAT is achieved by a motor-driven pump.
- Heat removal through the secondary system is expected during LPSD operations, including natural circulation during the operations that RCS is fully filled with water and reflux cooling during mid-loop operations. Operators are required to handle the related devices to achieve the secondary system cooling. Secondary system cooling is available when RCS is closed so that the natural circulation flow within RCS is established.
- SI system is forced off during LPSD operations for maintenance purposes; however at least two SI trains are in standby (not in maintenance) in all POSs. Therefore it is highly likely that function of SI system is maintained available for core cooling. Operators are required to manually activate the SI system for emergency injection.
- During safety injection and charging injection, conditions of low temperature and over pressure may occur if RHR relief valves are inoperable. In order to avoid the subsequent adverse event, operators are required to manually open the safety depressurization valves.
- If water in the spent fuel pit is available, operators are required to manually control several valves installed between SFP and RCS and gravitationally provide adequate amount of water to the RCS. In parallel, operators are required to establish the lineup between RWSP and SFP to continuously provide coolant water. Water supply from RWSP to SFP is achieved by a motor-driven pump. Gravity injection is available when RCS is open and RCS pressure is maintained near atmospheric so that the SFP water can be drained into the RCS.

(2) To terminate the progress of core damage if it begins and to retain the core within the reactor vessel

(During operations at power)

Core damage is identified by that both core outlet temperature and containment radiation level exceed criteria.

Essential countermeasure for termination of core damage progression and retention of core within the reactor vessel is to recover borated water injection into the reactor vessel. This is achieved by operating the safety injection system or alternate injection system. Safety injection system is provided primarily to prevent core damage however in case it fails to operate, recovery of safety injection system may be possible. Countermeasures and operator actions for each function are described below.

- Operator recovers the safety injection into RV before vessel melt through if possible.
- The alternate injection systems, such as CS/RHR pump and CVCS, are employed in case the safety injection system is down. Recovery action of the failed safety injection system is continued taken while the alternate core injection system is in operation.
- If RCS pressure is higher than the injection pump shut off head despite RCS is depressurized in case of a severe accident, additional depressurization is utilized if available.

(During LPSD operations)

During LPSD operations, accident management functions to terminate the progress of core damage are fundamentally same with the ones for operations at power.

(3) To maintain containment integrity as long as possible

(During operations at power)

Key functions of accident management to maintain containment integrity during operations at power are containment vessel isolation and decay heat removal from containment vessel. Decay heat removal is achieved in case both molten core cooling due to reactor cavity flooding and depressurization of containment vessel atmosphere are succeeded. Prevention of early containment failure due to temperature induced SGTR, hydrogen detonation and direct containment heating is also considered. Countermeasures and operator actions for each function are described below.

- Core damage is detected then operator confirms that containment vessel is properly isolated. Containment isolation may be done before core damage and hence it is required to reconfirm after core damage.
- Accident management of reactor cavity flooding is in order to cool down molten core relocated from RV breach to the reactor cavity. Decay heat is released to water and removed from containment vessel. The reactor cavity flooding is achieved utilizing the CSS and/or fire protection water supply system. Molten core cooling prevents containment failure due to basemat melt through, hydrogen generation due to MCCI, etc. Operator action is initiated if the water level in the reactor cavity is lower than a criterion when core damage is detected. CSS is manually activated and water flows into the reactor cavity by gravity through the

drain path. In order to utilize the fire protection water supply system for the reactor cavity flooding, it is necessary to establish lineup before activating the fire water service pump.

- Accident management of containment heat removal is in order to prevent containment overpressure failure. The containment heat removal is achieved utilizing either CSS or alternate containment cooling by containment fan cooler system. CSS is one of engineered safety features and operator action is required if CSS is not automatically activated. Containment fan cooler system is a non-safety system and the fan operation is not credited during a severe accident. Cooling water is switched from chilled water system to CCW system. In order to apply the alternate containment cooling, operator pressurize CCW surge tank. This is in order to prevent boiling of CCW in the cooling unit of containment fan cooler system. Fire protection water supply system is employed in case neither CSS nor alternate containment cooling is available in order to acquire longer recovery time. Fire protection water supply system is lined up to the containment spray header and provides water as spray droplet. This operation temporarily depressurizes containment however the fire protection water supply system does not contain a heat exchanger, and thus has no ability to remove heat from containment to terminate the containment pressurization.

- Accident management of prevention of early containment failure is through prevention of containment bypass, HPME and hydrogen detonation. RCS depressurization is in order for prevention of HPME and temperature-induced SGTR. When core damage is detected, severe accident dedicated depressurization valve is opened and if necessary safety depressurization valve is opened. In case water supply to SG is available, main steam depressurization valve is opened to enhance primary system cooling and depressurization if needed. Water supply to SG is recovered or controlled to avoid FP release due to temperature induced SGTR through secondary system, also to depressurize RCS. Main feedwater system or emergency feedwater system are employed for this function and operation is required when SG water level decreases below a criterion if available. Combustible gas control is in order to prevent containment failure especially due to hydrogen detonation. Although the combustible gas control is automatically achieved by hydrogen ignition system, in case CSS fails and containment vessel atmosphere is kept inerted for certain duration, CSS recovery or operation of alternate containment cooling may lead containment vessel atmosphere to combustible condition under high hydrogen concentration. In such case containment depressurization is suspended at a relatively high containment pressure. It is widely known that the low inert limit of steam concentration is approximately 55% by volume and the low flammability limit of hydrogen concentration is approximately 4% by volume. Hydrogen impact when depressurizing containment is evaluated and a material, such as a map of hydrogen concentration vs. containment pressure to show if hydrogen burn is safe or potential danger, is prepared to support the containment depressurization operation. MCR alarm for hydrogen concentration is also provided through the containment hydrogen monitoring system when the hydrogen volumetric concentration reaches 4% and 8%. The control room operators are required to carefully monitor the condition of containment.

(During LPSD operations)

It is likely that containment is not isolated during LPSD operations in order for various maintenance activities. The accident management functions to maintain containment integrity during LPSD include first, recovery of containment isolation from the environment, and second, heat removal from the isolated containment. It is evaluated for the LPSD PRA that the losses of ac power contribute approximately 10% of shutdown risk in total. As a result any period in which the RCS level is low should be planned to be undertaken with maximum confidence in offsite and onsite power reliability. Maintenance activities in the switchyard are minimal or precluded by risk management during mid-loop for example. It may also be preferable to limit undertaking the maintenance activities which require opening the equipment hatch during the inventory is low in the reactor. This limitation will fundamentally eliminate the necessary operator actions for containment closure during mid-loop, and will significantly contribute for LPSD risk reduction.

- According to the identification of some symptoms, such as loss of decay heat removal capability and onset of boiling in core, operators are required to take actions of containment isolation.
- For decay heat removal, accident management functions are fundamentally same with the ones for operations at power, i.e. reactor cavity flooding, activation of CSS or alternate containment cooling by natural circulation, or otherwise firewater injection to spray header.
- For prevention of containment failure if containment isolation is established, accident management functions are fundamentally the same as those for at-power operation, i.e., RCS depressurization for preventing HPME and temperature induced SGTR as well as combustible gas control using the hydrogen ignition system.

(4) To minimize offsite release

(During operations at power)

Key function of accident management to minimize offsite release during operations at power is fission products removal from containment vessel atmosphere. CSS and fire protection water supply system are utilized to reduce the amount of airborne FP in the containment atmosphere. Countermeasures and operator actions for each function are described below.

- Operator recovers CSS even after containment vessel failure if available.
- If CSS is not available, operator recovers fire protection water supply system connected to the spray header if available.

(During LPSD operations)

It is likely that containment is not isolated during LPSD operations in order for various maintenance activities. The accident management functions to minimize offsite release during LPSD include first, recovery of containment isolation from the environment and second, deposition of fission products within the containment. It is evaluated for the

LPSD PRA that the losses of ac power contribute approximately 10% of total shutdown risk. As a result, any period in which the RCS level is low should be undertaken with maximum confidence in offsite and onsite power reliability. Maintenance activities in the switchyard are minimal or precluded by risk management during mid-loop, for example. It may also be preferable to limit maintenance activities which require opening the equipment hatch when inventory is low in the reactor. This limitation will fundamentally eliminate the necessary operator actions for containment closure during mid-loop, and will significantly contribute to LPSD risk reduction.

- According to the identification of some symptoms, such as loss of decay heat removal capability and onset of boiling in core, operators are required to take actions of containment isolation.
- Operators are required to activate CSS after confirming that the containment isolation is established and personnel in the containment all evacuated.
- If CSS is not available, operators are required to establish the lineup of the fire protection water supply system to the spray header.

19.2.6 Consideration of Potential Design Improvements Under 10 CFR 50.34(f)

19.2.6.1 Introduction

This section is prepared using design-specific PRA information to consider potential design improvements as required under 10 CFR 50.34(f) and follows content guidance provided in NRC Regulatory Guide 1.206.

The complete Severe Accident Mitigation Design Alternatives (SAMDA) analysis is reported in the Applicant’s Environmental Report - Standard Design Certification (Reference 19.2-17), and its summary is described in this section.

19.2.6.1.1 Background

In a 1985 policy statement, the U.S. Nuclear Regulatory Commission (NRC) defined the term "severe accident" as an event that is "beyond the substantial coverage of design-basis events," including events where there is substantial damage to the reactor core. While design-basis events are considered to be those analyzed in accordance with the NRC's Standard Review Plan (NUREG-0800), severe accidents are considered in a PRA analysis. Accordingly, the PRA for the US-APWR design has been prepared to achieve the following objectives:

1. Identify the dominant severe accident sequences.
2. Modify the design, on the bases of PRA insights, to prevent or mitigate severe accidents and reduce the risk of severe accidents.
3. Provide a basis for concluding that all reasonable steps have been taken to reduce the chances of occurrence, and to mitigate the consequences, of severe accidents.

Applicants for reactor design certification must also consider alternative design features for severe accidents consistent with the requirements of 10 CFR Part 52 and 10 CFR Part 50, as well as a court ruling related to NEPA. These requirements can be summarized as follows:

> The NRC's severe accident safety requirements for new reactor designs are provided 10 CFR Part 52, paragraph 52.47. Specifically, the NRC's Three Mile Island safety requirements are referenced in the 10 CFR 52.47(a)(8) and are found in 10 CFR 50.34(f). Paragraph 52.47(a)(21) concerns the treatment of unresolved safety issues and generic safety issues. Finally 10 CFR 52.47(a)(27) requires the performance of a design-specific PRA.
>
> 10 CFR 50.34(f)(1)(i) requires the applicant to perform a plant/site-specific probabilistic risk assessment, the aim of which is to seek such improvements in the reliability of core and containment heat removal systems as are significant and practical and do not impact excessively on the plant (Reference 19.2-5).
>
> The U.S. Court of Appeals decision, in *Limerick Ecology Action vs. NRC*, 869 F.2d 719 (3rd Cir. 1989), effectively requires the NRC to include consideration of certain SAMDAs in the environmental impact review performed under Section 102(2)(c) of NEPA.

Although these two requirements are not directly related, they share a common purpose to consider alternatives to the proposed design, to evaluate potential alternative improvements in the plant design which increase safety performance during severe accidents, and to prevent reasonable alternatives from being foreclosed. While the NRC has noted that it is not required to consider alternatives to a specific design, as a matter of discretion, the Commission has determined that considering SAMDAs concomitant with the rulemaking is consistent with the intent of 10 CFR Part 52 for early resolution of issues, finality of design issues resolution, and achieving the benefits of standardization.

In its decision in *Limerick Ecology Action v. NRC*, the Court of Appeals for the Third Circuit expressed its opinion that it would likely be difficult to evaluate SAMDAs for NEPA purposes on a generic basis. However, the NRC has determined that generic evaluation of SAMDAs for standard designs is warranted for two significant reasons. First, the design and construction of all plants referencing the specific certified design will be governed by the rule certifying a single design. Second, the site parameters specified in the rule and the DCD establish the consequences for a reasonable enveloping set of SAMDAs for the specified design. Related discussions are recognized in SECY-91-229 and its SRM (Reference 19.2-18).

The information provided in this section complies with applicable parts of NUREG-1555. Included are: (i) a list of leading contributors to (1) core damage frequency, and (2) dose consequences; (ii) the methodology process, and rationale used by the applicant to identify, screen, and select design alternatives and procedural modifications; (iii) the estimated cost, risk reduction, and value impact ratios for the selected SAMAs and the assumptions used to make these estimates; and (iv) a description and list of any alternatives that have been or will be implemented to prevent or mitigate severe accidents or reduce the risk of a severe accident (Reference 19.2-19).

For the US-APWR, an evaluation of potential design improvements, or severe accident mitigation design alternatives (SAMDAs), has been performed to meet these requirements.

19.2.6.1.2 Purpose

The purpose of this section is to provide an evaluation of SAMDAs for the US-APWR design. The approach taken is to consider the net value of a design alternative (SAMDA) as the difference between the benefit of the modification and the cost of the enhancement, with the outcome determining whether the safety benefits of the identified SAMDA outweigh the cost of incorporation in the plant design.

The cost-benefit methodology follows the current guidance for regulatory analysis contained in NUREG/BR-0184 and NUREG/BR-0058 (References 19.2-20 and 19-2-21). Industry implementation guidance (NEI 05-01, Rev. A) is applied to identify and screen SAMDAs (Reference 19.2-22). Review of potential design alternatives will consider those of current PWR plant designs, PRA information on US-APWR, and design alternatives identified by US-APWR design personnel. Both onsite and offsite costs will be included in a manner consistent with SECY-99-169 (Reference 19.2-23).

This evaluation will include a design description, estimated cost, and estimated benefit for each alternative.

19.2.6.2 Estimate of Risk for Design

The SAMDA analysis uses two distinct analyses to form the basis for the baseline design risk. The first analysis is the Level 1 and 2 PRA of the US-APWR design. The second analysis is a Level 3 PRA analysis that integrates the Level 2 source terms to quantify the consequences based on a reference site.

The CDF from at power internal events, fire and flood events is 4.4E-06 per reactor-year and from LPSD events is 2.0E-07 per reactor-year. The LRF from at power internal events, fire and flood events is 6.1E-07 per reactor-year and from LPSD events is 2.0E-07 per reactor-year. The total CDF and LRF are therefore 4.6E-06 per reactor-year and 8.1E-07 per reactor-year, respectively (Reference 19.2-17). These PRA evaluation results are not based on the latest version. The SAMDA analysis inherently involves various uncertainties, therefore the evaluation is performed considering a variety of conservative assumptions. Hence the influence from the PRA update can be sufficiently covered in a safety margin and conservatism.

The MAAP code is used to develop the fission product source term corresponding to each release category. The MACCS2 code, Version 1.13.1 (Reference 19.2-24) is used in the Level 3 PRA analysis to estimate the population dose for each release category source term. In the offsite dose risk quantification, the meteorological data of the Surry site has been used as “typical”. The 50-mile population distribution data for the Surry site in the MACCS2 code sample input file has been adjusted to be in exceedance of about 80% of the U.S. nuclear plant sites, as described in NUREG/CR-2239, “Technical Guidance for Siting Criteria Development” (Reference 19.2-25). The population data and other assumptions applied are found in the Environmental Report for the US-APWR (Reference 19.2-17).

The total population dose risk is 2.7E-01 person-rem/reactor-year, and the largest contributor is from RC3 – Containment overpressure failure due to loss of heat removal (86%). The total offsite property risk is $8.9/reactor-year, with the largest contributors are: RC3 – Containment overpressure failure due to loss of heat removal (58%), RC4 – Early containment failure (20%), and RC1 – Containment Bypass (18%).

19.2.6.3 Identification of Potential Design Improvements

19.2.6.3.1 Screening method

The approach for identifying potential design improvements followed NEI 05-01, Rev. A (Reference 19.2-22). SAMDA candidates are selected primarily from two sources; one is screening from the NEI -05-01 for pressurized water reactors (PWRs, Table 14), the other is US-APWR specific candidates considering the design and insights from the CDF and population dose risk profile. The process used for SAMDA identification follows Section 5 of NEI 05-01, and resulted in the 156 SAMDA candidates.

Two phases of evaluation are performed with the first being a Phase I qualitative screening analysis following section 6 of NEI 05-01. This screening is done to eliminate SAMDAs from further consideration, and is done to reduce the number of SAMDAs for which quantitative cost analysis in a later phase (Phase II) is necessary.

19.2.6.3.2 Screening criteria

The screening criteria identified in NEI-05-01 are applied for the US-APWR design.

As the result of phase I screening, the following 10 SAMDAs are retained for Phase II analysis (Subsection 19.2.6.5). The candidate SAMDAS for Phase II analysis are:

1. Provide additional dc battery capacity (At least one train emergency dc power can be supplied more than 24 hours.)

2. Provide an additional gas turbine generator (At least one train emergency ac power can be supplied more than 24 hours.)

3. Install an additional, buried off-site power source

4. Provide an additional high pressure injection pump with independent diesel (With dedicated pump cooling)

5. Add a service water pump (Add independent train)

6. Install an independent reactor coolant pump seal injection system, with dedicated diesel (With dedicated pump cooling)

7. Install an additional component cooling water pump (Add independent train)

8. Add a motor-driven feedwater pump (With independent room cooling)

9. Install a filtered containment vent to remove decay heat

10. Install a redundant containment spray system (Add independent train)

19.2.6.4 Risk Reduction Potential of Design Improvements

Guidance contained in NUREG/BR-0184 (Reference 19.2-20) and NEI 05-01, Rev. A (Reference 19.2-22) provide the methodology for value-impact (benefit-cost) analysis, which is a central part of regulatory analysis. Values and impacts are characterized in monetary terms when feasible. The analysis balances benefits (values) with costs (impact) related to a proposed NRC action.

There are five principal component costs considered using the NRC handbook methodology when the proposed action changes either accident frequencies or consequences.

- Offsite exposure cost
- Onsite exposure cost
- Offsite property cost
- Cleanup and decontamination cost
- Replacement power cost

The risk reduction potential assessment covers four categories of events: (1) internal events; (2) internal fire; (3) internal flood; and (4) low-power and shut down (LPSD).

In the present analysis, the assumption is made that the population dose risk from internal events at power is applicable to internal fire events at power, internal flooding events at power, and shutdown events. A CDF scaling factor is applied to adjust from the population dose risk from internal events to the subject event dose risk. The same argument is also applied to the economic cost risk from internal events at power and scaling economic cost risk for internal fire events at power, internal flooding events at power, and shutdown events.

The total maximum averted cost benefit is the sum of the five component cost benefits for the four events discussed above. The maximum averted cost is $289k.

19.2.6.5 Cost Impacts of Candidate Design Improvements

This subsection discusses the cost impacts of candidate design improvements (Phase II evaluation of SAMDA candidate items). For those SAMDAs involving hardware modifications, the cost estimation process was to find “standard” costs from the following:

- NEI 05-01, Rev. A
- SAMA analyses for current U.S. power plants
- SAMDA analyses for other reactor designs.

Cost estimates that were derived independent of earlier precedents included procurement and installation, and where applicable, long-term maintenance, surveillance, calibration and training. These factors are allowable under NEI 05-01. A measure of conservatism was retained in the cost estimates to allow a reasonable examination of cost vs. benefit.

SAMDA cost evaluation results are described in Table 19.2-9. The lowest cost SAMDA is SAMDA #10, *Install a redundant containment spray system*, at $870k. The second lowest cost SAMDA is SAMDA #4, *Provide an additional high pressure injection pump with independent diesel*, at $1,000k.

19.2.6.6 Cost-Benefit Comparison

Based on that the every SAMDA cost is greater than the Maximum Averted Benefit of $289k, none of the SAMDA candidates is cost-beneficial.

As an uncertainty analysis, table 19.2-9 shows the outcome of each SAMDA benefit sensitivity analysis. Each SAMDA benefit is derived by multiplying each ratio of contribution to decrease CDF or LRF and the maximum averted cost together. The baseline benefit involves a real discount rate, r, of 7%/year (0.07/year), as recommended in NUREG/BR-0184, the sensitivity cases of 5% and 3% discount rate are specified in NEI 05-01 and NUREG/BR-0058 respectively. The last column shows the SAMDA benefit using a monetary equivalent of population dose of $3,000 per person-rem (instead of the $2,000 per person-rem value used in the baseline analysis). The benefit of each SAMDA is observed to be significantly less than the cost impact.

19.2.6.7 Conclusions

There are no additional design alternatives that are shown to be cost-beneficial in severe accident mitigation design.

19.2.7 References

19.2-1 Contents of Applications; Technical Information, Title 10, Code of Federal Regulations, Part 52.47 (71 FR 12782), U.S. Nuclear Regulatory Commission, Washington, DC, March 2006.

19.2-2 Evolutionary Light-Water Reactor (LWR) Certification Issues and Their Relationship to Current Regulatory Requirements, SECY-90-016, U.S. Nuclear Regulatory Commission, Washington, DC, letter issued January 12, 1990 and staff requirements memoranda issued June 26, 1990.

19.2-3 Policy, Technical, and Licensing Issues Pertaining to Evolutionary and Advanced Light-Water Reactor Designs, SECY-93-087, U.S. Nuclear Regulatory Commission, Washington, DC, letter issued April 2, 1993 and staff requirements memoranda issued July 21, 1993.

19.2-4 Source Term-Related Technical and Licensing Issues Pertaining to Evolutionary and Passive Light-Water-Reactor Designs, SECY-94-302, U.S. Nuclear Regulatory Commission, Washington, DC, letter issued December 19, 1994.

19.2-5 Contents of Applications; Technical Information, Title 10, Code of Federal Regulations, Part 50.34, U.S. Nuclear Regulatory Commission, Washington, DC, January, 2007.

19.2-6 Combustible Gas Control for Nuclear Power Reactors, Title 10, Code of Federal Regulations, Part 50.44, U.S. Nuclear Regulatory Commission, Washington, DC, January, 2007.

19.2-7 N.K. Tutu, et. al., Low-pressure Cutoff for Melt Dispersal from Reactor Cavities, Transaction of American Nuclear Society ; Vol/Issue: 57; Joint meeting of the European Nuclear Society and the American Nuclear Society; 30 Oct - 4 Nov 1988; Washington, DC, USA

19.2-8 M.M. Pilch, et al., The Probability of Containment Failure by Direct Containment Heating in Zion, NUREG/CR-6075, U.S. Nuclear Regulatory Commission, Washington, DC, December 1994.

19.2-9 A Reassessment of the Potential for an Alpha-Mode Containment Failure and a Review of the Current Understanding of Broader Fuel-Coolant Interaction Issues, NUREG-1524, U.S. Nuclear Regulatory Commission, Washington, DC, 1996.

19.2-10 M. Akiyama, et al. (Eds), Proceedings of the OECD/CSNI Specialists Meeting on Fuel-Coolant Interaction, JAERI-Conf 97-011, 1997.

19.2-11 J.A. Achenbach, et al., Large-Scale Hydrogen Burn Equipment Experiments, EPRI NP-4354, Westinghouse Electric Corporation, December 1985.

19.2-12 D.B. King, et al., Safety-Related Equipment Survival in Hydrogen Burns in Large Dry PWR Containment Buildings, NUREG/CR-4763, U.S. Nuclear Regulatory Commission, Washington, DC, March 1988.

19.2-13 D.B. Clauss, Severe Accident Testing of Electrical Penetration Assemblies, NUREG/CR-5334, U.S. Nuclear Regulatory Commission, Washington, DC, November 1989.

19.2-14 Design Limits, Loading Combinations, Materials, Construction, and Testing of Concrete Containments, Regulatory Guide 1.136 Rev.3, U.S. Nuclear Regulatory Commission, Washington, DC, March 2007

19.2-15 US-APWR Probabilistic Risk Assessment, MUAP-07030-P Rev. 3 (Proprietary), Mitsubishi Heavy Industries, June 2011.

19.2-16 Combined License Applications for Nuclear Power Plants, Regulatory Guide 1.206, C.I.19, Probabilistic Risk Assessment and Severe Accident Evaluation, U.S. Nuclear Regulatory Commission, Washington, DC, June 2007.

19.2-17 Applicant's Environmental Report - Standard Design Certification, MUAP-DC021 Rev.2, Mitsubishi Heavy Industries, October. 2009.

19.2-18 Severe Accident Mitigation Design Alternatives for Certified Standard Designs, SECY-91-229, U.S. Nuclear Regulatory Commission, Washington, DC, letter issued July 31, 1991 and staff requirements memoranda issued October 25, 1991.

19.2-19 Environmental Standard Review Plan, Section 7.3, Severe Accident Mitigation Alternatives, NUREG-1555 Rev. 1, U.S. Nuclear Regulatory Commission, Washington, DC, July 2007.

19.2-20 Regulatory Analysis Technical Evaluation Handbook, NUREG/BR-0184, U.S. Nuclear Regulatory Commission, Washington, DC, 1997.

19.2-21 Regulatory Analysis Guidelines of the U.S. Nuclear Regulatory Commission, NUREG/BR-0058 Rev. 4, U.S. Nuclear Regulatory Commission, Washington, DC, August 2004.

19.2-22 Severe Accident Mitigation Alternatives (SAMA) Analysis Guidance Document, NEI 05-01 Rev. A, Nuclear Energy Institute, Washington, DC, November 2005.

19.2-23 Treatment of Averted Onsite Costs in Regulatory Analysis, SECY-99-169, U.S. Nuclear Regulatory Commission, Washington, DC, letter issued July 1, 1999.

19.2-24 Code Manual for MACCS2 User's Guide, NUREG/CR-6613 Vol. 1 (SAND97-0594), U.S. Nuclear Regulatory Commission, Washington, DC, and Sandia National Laboratories, May 1998.

19.2-25 Technical Criteria for Siting Criteria Development, NUREG/CR-2239, U.S. Nuclear Regulatory Commission, Washington, DC, and Sandia National Laboratories, December 1982.

19.2-26 Heat affected zone reliability proof examination like weld etc. (Containment Vessel) Result report Large Scale Mixing Test (In Japanese), Nuclear Power Engineering Corporation (NUPEC), March 1993.

19.2-27 Heat affected zone reliability proof examination like weld etc. (Containment Vessel) Result report Large Scale Combustion Test (In Japanese), Nuclear Power Engineering Corporation (NUPEC), March 1995.

19.2-28 O. Kawabata, Hydrogen Detonation and Dynamic Structural Response Analyses for Large Dry Containment Vessels of Steel and Pre-Stressed Concrete Types, Proceedings of ICONE-8, 8th International Conference on Nuclear Engineering, April 2-6, 2000, Baltimore, MD USA.

19.2-29 S.R. Tieszen, et al., Detonability of H_2-Air-Diluent Mixtures, NUREG/CR-4905, U.S. Nuclear Regulatory Commission, Washington, DC, June 1987.

19.2-30 G. Ciccarelli, et al., The Effect of Lateral Venting on Deflagration-to-Detonation Transition in Hydrogen-Air-Steam Mixtures at Various Initial

Temperatures, NUREG/CR-6524, U.S. Nuclear Regulatory Commission, Washington, DC, November 1998.

19.2-31 Individual Plant Examination for Severe Accident Vulnerabilities - 10 CFR 50.54(f), Generic Letter GL 88-020, U.S. Nuclear Regulatory Commission, Washington, DC,

19.2-32 R.E. Blose, et al., SWISS: Sustained Heated Metallic Melt/Concrete Interactions with Overlying Water Pools, NUREG/CR-4727, U.S. Nuclear Regulatory Commission, Washington, DC, 1987.

19.2-33 M.T. Farmer, et al., Status of Large Scale MACE Core Coolability Experiments, Proceedings of OECD Workshop on Ex-Vessel Debris Coolability, Karlsruhe, Germany, 15-18 November 1999

19.2-34 M.T. Farmer, et al., Status and Future Direction of the Melt Attack and Coolability Experiments (MACE) Program at Argonne National Laboratory, Proceedings of ICONE9, 2001.

19.2-35 R.E. Blose, et al., Core-Concrete Interactions with Overlying Water Pools: The WETCOR-1 Test, NUREG/CR-5907, U.S. Nuclear Regulatory Commission, Washington, DC, 1993.

19.2-36 H. Nagasaka, et al., COTELS Project (3): Ex-vessel Debris Cooling Tests, Proceedings of OECD Workshop on Ex-Vessel Debris Coolability, Karlsruhe, Germany, 15-18 November 1999.

19.2-37 M.T. Farmer, et al., Status of the Melt Coolability and Concrete Interaction (MCCI) Program at Argonne National Laboratory, Proceedings of ICAPP '05, Seoul, Korea, 5644 (2005).

19.2-38 M.T. Farmer, et al. The Results of the CCI-2 Reactor Material Experiment Investigating 2-D Core-concrete Interaction and Debris Coolability, Proceedings of the 11th International Topical Meeting on Nuclear Reactor Thermal-hydraulics (NURETH-11), Avignon, France, 2-6 October 2005.

19.2-39 M.T. Farmer, et al., A Summary of Findings from 2-D Core Concrete Interaction (CCI) Test Series, Proceeding of OECD MCCI Seminar, 2007.

19.2-40 H. Alsmeyer, et al., BETA Experimental Results on Melt/Concrete Interaction: Silicate Concrete Behavior, Proceedings of the Committee on the Safety of Nuclear Installations (CSNI) Specialists' Meeting on Core Debris-Concrete Interactions, EPRI NP-5054-SR, 1987.

19.2-41 H. Alsmeyer, et al., BETA Experimental Results on Melt/Concrete Interaction: Limestone Concrete Behavior, Proceedings of the Committee on the Safety of Nuclear Installations (CSNI) Specialists' Meeting on Core Debris-Concrete Interactions, EPRI NP-5054-SR, 1987.

19.2-42 D.H. Thompson, et al., Thermal-hydraulic aspects of the large scale integral MCCI tests in the ACE program, Argonne National Laboratory, OECD CSNI Specialist Meeting on Core Debris Concrete Interactions, 1992.

19.2-43 J.E. Gronager, et al., TURC2 and 3: Large Scale UO2/ZrO2/Zr Melt-Concrete Interaction Experiments and Analysis, NUREG/CR-4521, U.S. Nuclear Regulatory Commission, Washington, DC, 1986.

19.2-44 E.R. Copus, et al., Sustained Uranium-Concrete Interactions: The SURC Experiments, Proceedings of the Committee on the Safety of Nuclear Installations (CSNI) Specialists' Meeting on Core Debris-Concrete Interactions, EPRI NP-5054-SR, 1987.

19.2-45 E.R. Copus, et al., Core-Concrete Interactions Using Molten Steel with Zirconium on a Basaltic Basemat: The SURC-4 Experiment, NUREG/CR-4994, U.S. Nuclear Regulatory Commission, Washington, DC, 1988.

19.2-46 E.R. Copus, et al., Core-Concrete Interactions Using Molten Urania with Zirconium on a Limestone Concrete Basemat: The SURC-1 Experiment, NUREG/CR-5443, U.S. Nuclear Regulatory Commission, Washington, DC, 1992.

19.2-47 E.R. Copus, et al., Core-Concrete Interactions Using Molten Urania with Zirconium on a Basaltic Basemat: The SURC-2 Experiment, NUREG/CR-5564 U.S. Nuclear Regulatory Commission, Washington, DC, 1992.

19.2-48 B.W. Spencer, et al., Results of EPRI/ANL DCH Investigations and Model Development, Paper submitted for presentation at ANS/ENS Conference on Thermal Reactor Safety, Avignon, France, Oct. 2-7, 1988.

19.2-49 M. Ishii, et al., Corium Dispersion in Direct Containment Heating, Separate Effect Experiments with Water and Woods Metal Simulating Core Melt for Zion Reactor Conditions, NUREG/CR-6510 Vol. 1, U.S. Nuclear Regulatory Commission, Washington, September 1999.

19.2-50 M. Ishii, et al., Corium Dispersion in Direct Containment Heating, Theoretical Analysis of the Hydrodynamic Characteristics, NUREG/CR-6510 Vol. 2, U.S. Nuclear Regulatory Commission, Washington, September 1999.

19.2-51 T.K. Blanchat, et al., Experiments to Investigate Direct Containment Heating Phenomena with Scaled Models of the Surry Nuclear Power Plant, NUREG/CR-6152, U.S. Nuclear Regulatory Commission, Washington, June 1994.

19.2-52 M.M. Pilch, et al., The Probability of Containment Failure by Direct Containment Heating in Surry, NUREG/CR-6109, U.S. Nuclear Regulatory Commission, Washington, May 1995.

19.2-53 M.M. Pilch, et al., Resolution of the Direct Containment Heating Issue for All Westinghouse Plants With Large Dry Containments or Subatomospheric Containments, NUREG/CR-6338, U.S. Nuclear Regulatory Commission, Washington, February 1996.

19.2-54 A Review of the Current Understanding of the Potential for Containment Failure from In-Vessel Steam Explosions, NUREG-1116, U.S. Nuclear Regulatory Commission, Washington, 1985.

19.2-55 N. Yamano, et al., Studies of Fuel Coolant Interactions, During Core Melt Accident of Nuclear Power Plants, NUREG/CP-0127, U.S. Nuclear Regulatory Commission, Washington, 1993.

19.2-56 J. Sugimoto, et al., Steam Explosion Experiment in the ALPHA Program – Phenomena and Estimation of Energy Conversion Ratio- (in Japanese), JAERI-M92-035, 1992.

19.2-57 D.H. Cho, et al., Experiments on Interactions between Zirconium-Containing Melt and Water, NUREG/CR-5372, U.S. Nuclear Regulatory Commission, Washington, 1998.

19.2-58 M. Kato, et al., COTELS Project (2): Fuel Coolant Interaction Tests under Ex-Vessel Conditions, Proceedings of OECD Workshop on Ex-Vessel Debris Coolability, Karlsruhe, Germany, 15-18 November 1999.

19.2-59 A. Annunziato, et al., FARO and KROTOS Code Simulation and Analysis at JRC Ispra, Nuclear Engineering and Design, Vol. 189, pp.359-378, 1999.

19.2-60 I. Huhtiniemi, et al., Results of Recent KROTOS FCI Tests: Almina Versus Corium Melts, Nuclear Engineering and Design, Vol. 189, pp.379-389, 1999.

19.2-61 Sever Accident Risks: An Assessment for Five U. S. Nuclear Power Plants, NUREG-1150, U.S. Nuclear Regulatory Commission, Washington, December 1990.

19.2-62 Risk Assessment of Severe Accident-Induced Steam Generator Tube Rupture, NUREG-1570, U.S. Nuclear Regulatory Commission, Washington, March 1998

19.2-63 A. Hidaka, et al., Evaluation of Steam Generator U-Tube Integrity during PWR Station Blackout with Secondary System Depressurization, JAERI-Research 99-067, December 1999.

19.2-64 O. Kawabata, et al., The Study of Probabilistic Distribution on Steam Generator Tube Rupture with High Temperature Gas (in Japanese), Proceedings, 2006 Fall Meeting of the Atomic Energy Society of Japan, September 2006.

19.2-65 M.F. Hessheimer, et al., Containment Integrity Research at Sandia National Laboratories, NUREG/CR-6906, U.S. Nuclear Regulatory Commission, Washington, July 2006.

19.2-66 C.V. Subramanian, Integrity of Containment Penetrations under Severe Accident Conditions, NUREG/CR-4119, U.S. Nuclear Regulatory Commission, Washington, June 1985.

19.2-67 S. Sharma, et al., Ultimate Pressure Capacity of Reinforced and Prestressed Concrete Containments, NUREG/CR-4149, U.S. Nuclear Regulatory Commission, Washington, May 1985.

19.2-68 R.A. Dameron, et al., Posttest Analysis of the NUPEC/NRC 1:4 Scale Prestressed Concrete Containment Vessel Model, NUREG/CR-6809, U.S. Nuclear Regulatory Commission, Washington, March 2003.

19.2-69 M.F. Hessheimer, et al., Overpressurization Test of a 1:4-Scale Prestressed Concrete Containment Vessel Model, NUREG/CR-6810, U.S. Nuclear Regulatory Commission, Washington, March 2003.

19.2-70 Rules for Construction of Nuclear Facility Components, Division 2, Concrete Containments. Section III, American Society of Mechanical Engineers, 2001 Edition through the 2003 Addenda.

19.2-71 Containment Structural Integrity Evaluation for Internal Pressure Loading Above Design-Basis Pressure, Regulatory Guide 1.216, U.S. Nuclear Regulatory Commission, Washington, August 2010.

Table 19.2-1 Design Features for the US-APWR and Severe Accident Phenomena (Sheet 1 of 2)

Design Feature in US APWR	Severe Accident Phenomena							
	(1)	(2)	(3)	(4)	(5)	(6)	(7)	(8)
	Hydrogen Generation and Control	Core Debris Coolability	Steam Explosion (in- and ex-vessel) (Note 1, Note 2)	High Pressure Melt Ejection	Temperature Induced SGTR	MCCI	Long-term Containment Overpressure (Note 3)	Equipment survivability (Note 4)
Depressurization valve	-	-	-	X	X	-	-	-
Hydrogen igniter	X	-	-	-	-	-	-	-
Large volume containment	X	-	-	-	-	-	X	-
Hydrogen monitor	X	-	-	-	-	-	-	-
Alternate containment cooling	-	-	-	-	-	-	X	-
Firewater injection to spray header	-	-	-	-	-	-	X	-
Drain line to reactor cavity	-	X	-	X	-	X	-	-
Core debris trap	-	-	-	X	-	-	-	-
Debris spreading area	-	X	-	-	-	X	-	-

Table 19.2-1 Design Features for the US-APWR and Severe Accident Phenomena (Sheet 2 of 2)

Design Feature in US APWR	Severe Accident Phenomena							
	(1)	(2)	(3)	(4)	(5)	(6)	(7)	(8)
	Hydrogen Generation and Control	Core Debris Coolability	Steam Explosion (in- and ex-vessel) (Note 1, Note 2)	High Pressure Melt Ejection	Temperature Induced SGTR	MCCI	Long-term Containment Overpressure (Note 3)	Equipment survivability (Note 4)
Reactor cavity floor concrete	-	-	-	-	-	X	-	-
Reactor cavity depth	-	X	-	-	-	-	-	-
Firewater injection to reactor cavity	-	X	-	X	-	X	-	-

Note 1. In-vessel explosion in US-APWR is determined to be very unlikely and thus does not warrant explicit mitigation features.
Note 2. Containment structure has sufficient capability to withstand the load of an ex-vessel steam explosion and induced events by the load.
Note 3. A fourth mitigation feature is the CSS. The CSS's primary function is to mitigate containment overpressure.
Note 4. This study identifies systems and components, and time frames and environmental conditions created by burning of hydrogen, which are significant to establish and maintain safe shutdown and containment structural integrity.

Table 19.2-2 Summary of Relevant Studies and Experiments on Hydrogen Generation and Control

Paper / Experiment	Findings
NUPEC large scale test (Reference 19.2-26) (NUPEC: Nuclear Power Engineering Corporation)	Experiment modeled Japanese PWR dry containment showed that hydrogen released from steam generator compartment and annular compartment was well mixed and no local high concentration was observed.
NUPEC large scale hydrogen burn test (Reference 19.2-27)	NUPEC reported that no global burn was observed when hydrogen concentration was below 8% with less burning efficiency. 100% burning efficiency was observed for concentration 10%~15% however pressure rise was less than that assumed AICC. No DDT was observed for concentration less than 15%.
NUPEC detonation and containment integrity test (Reference 19.2-28)	Postulated hydrogen detonation under 13% hydrogen concentration caused approximately 0.6% of maximum plastic strain for PCCV liner plate, which is much lower than fracture strain of 19%. Potential of containment failure due to detonation was confirmed to be very small.
NUREG/CR-4905 (Reference 19.2-29)	SNL reported that hydrogen detonation was observed for hydrogen concentration 13.5%~70%.
NUREG/CR-6524 (Reference 19.2-30)	BNL reported that DDT occurred at lower hydrogen concentration for higher temperature. However, hydrogen concentration for DDT became higher when either steam or sideward opening existed.

Table 19.2-3 Summary of Relevant Studies and Experiments on Core Debris Coolability

Paper / Experiment	Findings
GL 88-020 (Reference 19.2-31)	NRC staff recommends that assessments be based on available cavity area and an assumed maximum coolable depth of 25 cm.
SWISS (Reference 19.2-32)	Debris cooling failed due to formation of stable crust and water pool above melt was kept below boiling point.
MACE (References 19.2-33, 19.2-34)	Debris cooling failed due to formation of stable crust and concrete erosion was not suppressed. Debris coolability cannot be concluded based on this series of experiment programs as observed phenomena are not prototypic to actual plant geometry.
WETCOR (Reference 19.2-35)	Influence of sidewall was eliminated by heating. Debris cooling failed due to formation of stable crust. Neither fragmentation of melt nor indication of instability of crust was observed.
COTELS (Reference 19.2-36)	Debris was cooled by coolant water and concrete erosion was suppressed. This was by water penetration to the porous of debris bed via eroded concrete sidewall clearance.
OECD MCCI (References 19.2-37, 19.2-38, 19.2-39)	Debris was cooled by coolant water and concrete erosion was suppressed. Water was able to penetrate the interface between the corium and concrete sidewalls. This cooling mechanism was not observed in MACE M1b, with inert refractory (MgO) sidewall.
BETA (References 19.2-40, 19.2-41)	Experiments performed at Kernforschungszentrum Karlsruhe (KZK). Downward erosion was greater than sideward for high-power experiments. This tendency was more significant for silicate concrete than limestone.
ACE (Reference 19.2-42)	Experiments performed at ANL. Melt was thoroughly mixed by gases released from the decomposing concrete and no stratification of oxidized and metallic melts was observed.
TURC (Reference 19.2-43)	Experiments performed at SNL. Transient heat conduction into concrete was observed in this experiment, resulting in decomposition of concrete. H_2O and CO_2 were reduced to CO and H_2 during decomposition, respectively.
SURC (References. 19.2-44, 19.2-45, 19-2-46, 19.2-47)	Experiments performed at SNL to provide information on heat transfer mechanism, gas release chemistry and vaporization release of aerosols. Interaction temperature remained well above the concrete melting point and zirconium chemistry drastically affects the ablation rate and gas composition.

Table 19.2-4 Summary of Relevant Studies and Experiments on High Pressure Melt Ejection

Paper / Experiment	Findings
B. W. Spencer, et al. (Reference 19-2.48)	Experiment performed by ANL showed that containment atmosphere temperature rise is very small when reactor cavity was filled with water.
NUREG/CR-6510 (References 19.2-49, 19.2-50)	Dispersed debris was captured at traps during flowing within tunnel area and opening of stairs, etc. Influence of DCH was reduced due to this debris capture.
Transaction of ANS; Vol/ Issue: 57 (Reference 19.2-7)	It was suggested that a value of 2.38 MPa of primary system can be a low-pressure cutoff for direct containment heating.
NUREG/CR-6152 (Reference 19.2-51)	Scaling experiment by SNL showed that the pressure rise during DCH was as much as 0.5 MPa.
NUREG/CR-6075 (Reference 19.2-8) NUREG/CR-6109 (Reference 19.2-52) NUREG/CR-6338 (Reference 19.2-53)	It was concluded from this series of studies that the challenges by DCH have already been resolved for Westinghouse large dry containment. CCFP by DCH for all Westinghouse large dry containments were calculated less than 0.01. It was concluded that DCH issue has been resolved for these plants and no additional studies are required.

Table 19.2-5 Summary of Relevant Studies and Experiments on Fuel-Coolant Interaction

Paper / Experiment	Findings
NUREG-1116 (Reference 19.2-54) NUREG-1524 (Reference 19.2-9)	It was concluded that the potential for alpha-mode containment failure is negligible and the issue of this failure mode is resolved from risk point of view.
OECD/CSNI (Reference 19.2-10)	It was concluded that alpha-mode failure has no importance with regard to risk perspective.
ALPHA (References 19.2-55, 19.2-56) NUREG/CR-5372 (Reference 19.2-57)	It is commonly understood that steam explosion is unlikely to happen for saturated water. Potential of steam explosion includes large uncertainty since the occurrence of steam explosion triggering shows statistical behavior. It is considered very limited fraction of corium contributes to steam explosion when large amount of corium drops into water all at once. Fraction of energy conversion from corium to mechanical load is considered as much as a few %, or less.
COTELS (Reference 19.2-58) FARO (Reference 19.2-59) KROTOS (Reference 19.2-60)	No steam explosion was observed when mixture of molten UO_2 and Zr is dropped into water in the experiments of COTELS by NUPEC, and FARO and KROTOS by JRC-Ispra.

Table 19.2-6 Summary of Relevant Studies and Experiments on Containment Bypass

Paper / Experiment	Findings
NUREG-1150 (Reference 19.2-61)	It is considered that temperature-induced SGTR is very unlikely failure mode for high pressure core melt scenarios as long as tubes have no defect
NUREG-1570 (Reference 19.2-62)	Analysis result using SCDAP/RELAP5 have shown that surge line break is the most likely failure mode. It has been pointed that temperature-induced SGTR is likely in case of RCP seal LOCA sequences. Although RCP seal leak depressurize RCS, the associated RCS loop seal clearing greatly contributes to the tube failure potential. Secondary system pressure integrity is as important as RCS depressurization.
JAERI-Research (Reference 19.2-63)	JAERI performed a research focusing on secondary system depressurization during SBO and identified that SG tube integrity was narrowly maintained for the condition. It was however concluded that potential temperature-induced SGTR could not be ignored taking account of inherent uncertainty of computational calculation.
JNES research (Reference 19.2-64)	A research by JNES focusing on potential of temperature-induced SGTR under condition of secondary system depressurized at core damage. It has been reported that the mean of probability density for temperature-induced SGTR is 0.50, and that for surge line break is 0.37.

Table 19.2-7 Summary of Relevant Studies and Experiments on Equipment Survivability

Paper / Experiment	Findings
EPRI NP-4354 (Reference 19.2-11)	Experiments on response of typical safety equipment under hydrogen burn condition were performed. Most of equipment operated normally during and after all tests. It is concluded that the test data may be useful in assessing the survivability of safety equipment.
NUREG/CR-4763 (Reference 19.2-12)	Experiments performed by SNL for pressure transmitter and cables, under condition of single-burn and multiple-burn have been reported. Equipment survivability for single-burn was confirmed but not for multiple-burn.
NUREG/CR-5334 (Reference 19.2-13)	Experimental results on response of 3 types of wire penetrations have been reported. For Westinghouse containment, it was exposed to 400°F condition for 10 days. Electrical capability was maintained for 4 days, and mechanical capability was maintained for 10 days.

Table 19.2-8 Summary of Relevant Studies and Experiments on Long-Term Containment Overpressure

Paper / Experiment	Findings
NUREG/CR-6906 (Reference 19.2-65)	Containment may generally have pressure capability of a few times design pressure. Global, free-field strains on the order of a few % can be achieved before failure or rupture. However, actual containment may have more complexity than models, thus the capacities of models can be interpreted as an upper bound on actual containment capacity.
NUREG/CR-4119 (Reference 19.2-66)	Study on the integrity of containment penetrations under severe accident condition has been summarized. Database to predict leak rate of containment penetrations under severe accident conditions have been established.
NUREG/CR-4149 (Reference 19.2-67)	Modeling techniques and analysis procedures to determine ultimate pressure capacity of reinforced and pre-stressed concrete containments have been presented.
NUREG/CR-6809 NUREG/CR-6810 (References 19.2-68, 19.2-69)	Overpressurization test to failure for 1:4 scaled PCCV and the test analysis. Various data were collected, and containment response and failure modes were observed. Post-test analysis predicts liner's strain near weld seams and test itself shows the need for continuous backup bars on all liner seam welds.

Table 19.2-9 SAMDA Benefit Sensitivity Analyses

Design Alternative		Cost Impact	Maximum Averted Cost	Sensitivity of each SAMDA benefit			
				Baseline	Discount rate		Monetary equivalent of unit dose ($3000/person-rem)
					5%	3%	
1	Provide additional dc battery capacity	$2,000k	$289k	$116k	$188k	$304k	$124k
2	Provide an additional gas turbine generator	$10,000k		$116k	$188k	$304k	$124k
3	Install an additional, buried off-site power source	$10,000k		$118k	$193k	$312k	$127k
4	Provide an additional high pressure injection pump with independent diesel	$1,000k		$150k	$244k	$395k	$161k
5	Add a service water pump	$5,900k		$72k	$118k	$190k	$78k
6	Install an independent reactor coolant pump seal injection system, with dedicated diesel	$3,800k		$136k	$221k	$357k	$146k
7	Install an additional component cooling water pump	$1,500k		$72k	$118k	$190k	$78k
8	Add a motor-driven feed-water pump	$2,000k		$101k	$165k	$266k	$109k
9	Install a filtered containment vent to remove decay heat	$3,000k		$173k	$282k	$455k	$186k
10	Install a redundant containment spray system	$870k		$14k	$22k	$36k	$15k

Table 19.2-10 Equipment and Instruments Used in Severe Accident Management (Sheet 1 of 2)

Function	Countermeasure	Required at (*1)				Required Device, System or Parameter		Location	Judge (*2)	Note (*3)
		T0	T1	T2	T3					
Accident progression monitoring	Identification of core damage	X	X	-	-	parameter	Core exit temperature	in RCS	-	
							Containment radiation level	in-Cont	-	
	Monitoring of noble gas release path	X	X	X	X	parameter	Auxiliary building radiation level	ex-Cont	-	
							Main steam line radiation level	ex-Cont	-	
							Exhaust stack radiation level	ex-Cont	-	
							Environmental radiation level	ex-Cont	-	
Damaged core cooling	Water injection to primary system	X	X	X	-	system	Safety injection system	in-Cont	X	Screened out as it is normally open
							Alternate core injection	in-Cont	X	Screened out as insignificant for SA mitigation
							RV head vent	in-Cont	X	Screened out as insignificant for SA mitigation
		X	X	-	-	parameter	Core exit temperature	in RCS	-	
							RWSP water level	in-Cont	-	
							RV water level	in RCS	-	
	Water injection to reactor cavity	X	X	X	X	system	CSS	ex-Cont	-	
							Firewater injection to reactor cavity	ex-Cont	-	
							Firewater injection to spray header	ex-Cont	-	
		X	X	-	-	parameter	RWSP water level	in-Cont	-	
							Cavity water level	in-Cont	-	
							Cumulative firewater flow amount	ex-Cont	-	
Containment cooling	Containment depressurization	X	X	X	X	system	CSS	ex-Cont	-	
							Containment fan cooler unit	in-Cont	X	Screened out as it is static device
							CCW	ex-Cont	-	
		X	X	X	X	parameter	Containment pressure	in-Cont	X	
							RWSP water level	in-Cont	X	Screened out as alternative device available
	Preparation for alternate containment cooling by containment fan cooler unit	X	X	X	X	system	CCW pressurization system	ex-Cont	-	
		X	X	X	X	parameter	CCW surge tank pressure	ex-Cont	-	
	Firewater injection to spray header	X	X	X	X	system	Firewater spray system	ex-Cont	-	
		X	X	X	X	parameter	Containment pressure	in-Cont	X	
							Cumulative firewater flow amount	ex-Cont	-	

(*1) T0: Before core uncover, T1: After core uncover till core damage, T2: After core damage till RV failure, T3: After RV failure
(*2) Subject for study is judged considering the following criteria (1) the device, system or parameter is required at T2 and T3, and (2) location is either in RCS or in containment.
(*3) Judged as necessary to assess according to the above two criteria however screened out items are noted in this column with the reason screened out.
X: Included in the study, -: Excluded from the study

Table 19.2-10 Equipment and Instruments Used in Severe Accident Management (Sheet 2 of 2)

Function	Countermeasure	Required at (*1)				Required Device, System or Parameter		Location	Judge (*2)	Note (*3)
		T0	T1	T2	T3					
Prevention of Fission product release	Containment function	X	X	X	X	device	Containment body	in-Cont	X	Screened out due to its robustness
							Containment penetration	in-Cont	X	
		X	X	X	X	parameter	Containment pressure	in-Cont	X	
							Containment temperature	in-Cont	X	Screened out due to less importance
	Containment isolation	X	X	X	X	device	Containment isolation valve	in and ex-Cont	-	
		X	X	X	X	parameter	Containment isolation valve position	in and ex-Cont	-	
	Reduction of radiation at containment atmosphere	X	X	X	X	system	CSS	ex-Cont	-	
							Firewater spray system	ex-Cont	-	
		X	X	X	X	parameter	Containment radiation level	in-Cont	X	Screened out as alternative device available
	Secondary system water supply	X	X	X	-	system	Emergency feedwater system	ex-Cont	-	
							Main feedwater system	ex-Cont	-	
		X	X	-	-	parameter	SG water level	in-Cont	-	
	Primary system depressurization	X	X	X	-	device	Depressurization valve	in-Cont	X	(Severe accident dedicated valve)
							Safety depressurization valve	in-Cont	X	Screened out as insignificant for SA mitigation
							Main steam relief valve	ex-Cont	-	
							Main steam turbine bypass valve	ex-Cont	-	
		X	X	-	-	parameter	RCS pressure	in RCS	-	
	Combustible gas control	X	X	X	X	device	Hydrogen igniter	in-Cont	X	
							Dedicated batteries	ex-Cont	-	
		X	X	X	X	parameter	Hydrogen concentration	ex-Cont	-	

(*1) T0: Before core uncover, T1: After core uncover till core damage, T2: After core damage till RV failure, T3: After RV failure
(*2) Subject for study is judged considering the following criteria (1) the device, system or parameter is required at T2 and T3, and (2) location is either in RCS or in containment.
(*3) Judged as necessary to assess according to the above two criteria however screened out items are noted in this column with the reason screened out.
X: Included in the study, -: Excluded from the study

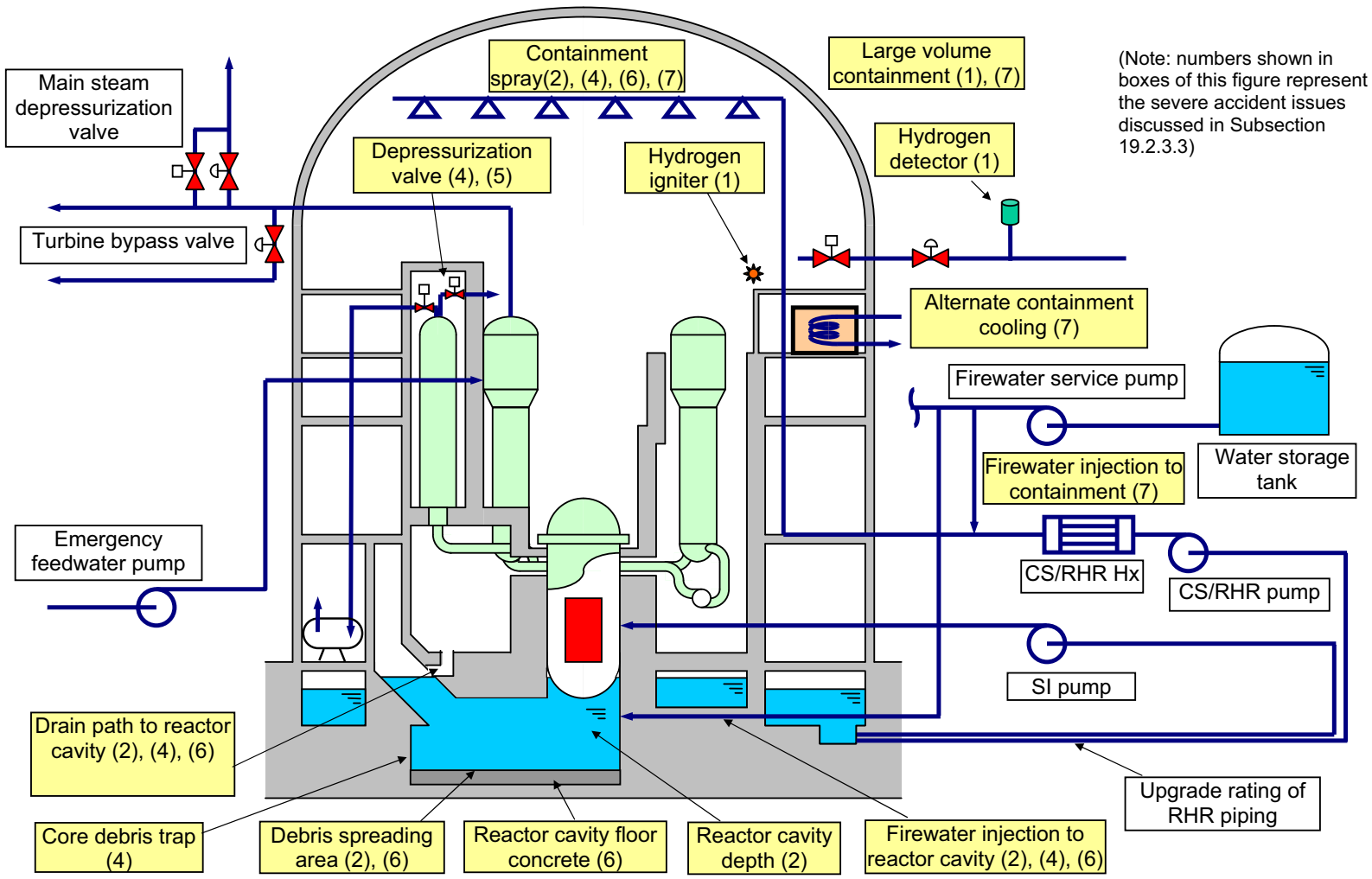

Figure 19.2-1 Schematic Diagram of the US-APWR Severe Accident Mitigation Features

19.3 Open, Confirmatory, and COL Action Items Identified as Unresolved

The following subsections identify the open, confirmatory and COL action items associated with this Chapter.

19.3.1 Resolution of Open Items

There are no open items associated with this Chapter.

19.3.2 Resolution of Confirmatory Items

There are no confirmatory items associated with this Chapter.

19.3.3 Resolution of COL Action Items

The following are the COL action items associated with this Chapter:

COL 19.3(1) The COL Applicant who intends to implement risk-informed applications will update and upgrade the information in the design-specific PRA to incorporate site-specific, as-built and as-operated information per 10 CFR 50.71(h)(1) for its intended uses and application. The COL Licensee will perform peer reviews of the site-specific PRA in accordance with requirements in PRA standards endorsed by the NRC prior to the use of the PRA to support risk-informed applications and will verify that the PRA model has the technical adequacy and detail to support the proposed licensee programs and applications.

COL 19.3(2) Deleted

COL 19.3(3) Deleted

COL 19.3(4) The Probabilistic Risk Assessment and Severe Accident Evaluation is updated as necessary to assess specific site information and all associated potential site-specific external hazards (both natural and man-made hazards) that may affect the facility are screened out or subjected to analysis.

COL 19.3(5) The COL Applicant will identify a milestone for completing a comparison of the as-built SSC HCLPFs to those assumed in DCD Subsection 19.1.5.1. Deviations from the HCLPF values or other assumptions in the seismic margins evaluation shall be analyzed to determine if any new vulnerability have been introduced. The COL Applicant will (1) update the design-specific plant system and accident sequence analysis to incorporate site-specific effects (soil liquefaction, slope failure, etc.) and plant-specific features (safety-related site-specific structures), as applicable, (2) update the SEL with HCLPF values and associated failure modes to adequately reflect the site-specific effects and plant-specific features of the COL site (for soil-related failure modes, the site-specific GMRS can be used for HCLPF calculations), (3) demonstrate that the design-specific plant-level HCLPF capability is maintained in the COL application, and (4) ensure that equipment on the SEL which is qualified by seismic testing will be procured to the appropriate HCLPF capacity.

COL 19.3(6) The COL Applicant develops or describes an accident management program which includes emergency operating procedures, consideration of risk-significant operator actions listed in DCD Table 19.1-119, training, and human reliability related severe accident guidance programs. Insights gained from the design specific PRA, including insights created by the incorporation of site and plant-specific information available at the COL application phase (for aspects of the design which are not bounded by the Standard Plant PRA), are to be reflected appropriately. The COL Applicant reviews that operator actions remain valid with respect to all applicable events and modes of operation. As detailed design information becomes available and site-specific procedures are developed, the human reliability analysis in the PRA is revised and updated.

COL 19.3(7) The COL Applicant will provide a milestone for completing the equipment survivability assessment of the as-built equipment required to mitigate severe accidents (electrical penetrations, hydrogen igniters and containment pressure (wide range)) to provide reasonable assurance that they will operate in the environmental conditions resulting from hydrogen burns associated with severe accidents for which they are intended and over the time span for which they are needed.

COL 19.3(8) The COL applicant will describe the uses of PRA in support of licensee programs and identify and describe risk-informed applications being implemented during the COL application, construction and operational phases.

COL 19.3(9) The COL applicant will describe the PRA maintenance and upgrade programs.

COL19.3(10) The site-specific PRA will be developed when site-specific information becomes available. The COL Applicant will evaluate and address the key sources of uncertainty and key assumptions listed in DCD Table 19.1-38. By conducting walkdowns during construction, the COL Applicant will assess and update as needed (i) key insights and assumptions (identified in DCD Table 19.1-119), (ii) routing and locations of piping and cables assumed in the internal fire and flooding events, and (iii) fragility values used in the seismic margin analysis that are important to the risk profile of the facility; the COL Applicant will confirm that this information is accurately reflected in the as-built design and construction. Differences between the as-built plant and the design used as the basis for the US-APWR PRA will be reviewed to determine whether there is significant impact on PRA results.

APPENDIX 19A US-APWR BEYOND DESIGN BASIS AIRCRAFT IMPACT ASSESSMENT

CONTENTS

Page

19A US-APWR Beyond Design Basis Aircraft Impact Assessment.....19A-1

19A.1 Introduction and Background.....19A-1

19A.2 Scope of the Assessment.....19A-1

19A.3 Assessment Methodology.....19A-2

19A.4 Assessment Results.....19A-2

19A.4.1 PCCV and SFP.....19A-2

19A.4.2 Plant Arrangement.....19A-3

19A.4.3 Fire Barriers and Fire Protection Features.....19A-4

19A.4.4 Core Cooling Features.....19A-4

19A.5 Conclusions of Assessment.....19A-6

19A.6 References.....19A-6

19A US-APWR Beyond Design Basis Aircraft Impact Assessment

19A.1 Introduction and Background

The design of the US-APWR takes into account the potential effects of the impact of a large commercial aircraft, which the NRC has determined is a beyond design basis event. In accordance with 10 CFR 50.150(a), a design-specific assessment has been performed for the US-APWR using realistic analysis to demonstrate that, in the event an US-APWR is struck by a large commercial aircraft, design features and functional capabilities exist to ensure that the following functions are maintained:

- The reactor core remains cooled, and
- Spent fuel pit integrity is maintained.

The assessment demonstrates the inherent robustness of the US-APWR design with regard to potential large aircraft impacts.

Specific assumptions used in the US-APWR aircraft impact assessment are based on NRC requirements, and guidance provided by the NRC and the Nuclear Energy Institute (NEI). The methodology for assessing effects for aircraft impact are described in NEI 07-13, “Methodology for Performing Aircraft Impact Assessments for New Plant Designs,” Revision 8 (Reference 19A-2). These guidelines were fully followed with no exceptions taken.

This appendix describes the design features and functional capabilities of the US-APWR identified in the detailed assessment that assure the reactor core remains cooled and spent fuel pit integrity is maintained. These identified design features are designated as “key” design features.

19A.2 Scope of the Assessment

The evaluation of plant damage caused by the impact of a commercial aircraft is a complex problem involving phenomena associated with structural damage resulting from the initial impact, shock-induced vibration, and the effects of an aviation fuel-fed fire. The analysis assessed the following effects of a large commercial aircraft impact on the US-APWR.

- damage resulting from the impact of the aircraft fuselage and wing structure;
- shock-induced vibration on systems, structures, and components (SSC);

- penetration of hardened aircraft components, such as engine rotors and landing gear; and
- the extent of damage from fires fed by aviation fuel.

The analysis assessed the above effects of a large commercial aircraft impact at multiple locations where a large commercial aircraft could potentially strike critical US-APWR structures.

Perforation of the Spent Fuel Pit (SFP) and Prestressed Concrete Containment Vessel (PCCV) is not predicted; therefore, realistic assessments of the damage to internal SSCs within the PCCV caused by 1) burning aviation fuel and 2) secondary impacts are not required. Realistic best estimate assessments of the damage to internal SSCs within the Reactor Building (R/B) and Power Source Buildings (PS/Bs) caused by 1) burning aviation fuel and 2) secondary impacts are performed.

19A.3 Assessment Methodology

Methods described in NEI 07-13 (Reference 19A-2) were followed to assess the effects on the structural integrity of the PCCV and the SFP and to assess the physical, fire and vibration effects of the aircraft impact on SSCs in the R/B and PS/Bs to ensure continued core cooling capability.

19A.4 Assessment Results

The US-APWR Aircraft Impact Assessment concludes that the US-APWR can continue to provide adequate protection of the public health and safety with respect to a large commercial aircraft impact as defined by the NRC. Such an aircraft impact would not impair the US-APWR's core cooling capability or spent fuel pit integrity as required by 10 CFR 50.150.

The assessment resulted in the identification of the benefits of the key design features and functional capabilities described below, changes to which are evaluated and reported in accordance with 10 CFR 50.150(c). These key design features and functional capabilities ensure that the US-APWR design fully meets the requirements of 10 CFR 50.150 by maintaining core cooling of fuel in the reactor vessel and the integrity of the spent fuel pit following the impact of a large commercial aircraft on the PCCV, R/B or PS/Bs, including the effects of burning aviation fuel and secondary impacts.

19A.4.1 PCCV and SFP

The PCCV, as described in Section 3.8.1 and Figure 3.8.1-1 is a key design feature for the protection of the safety systems located inside containment from the impact of a large commercial aircraft. The assessment concludes that a strike upon the PCCV would not result in the perforation of the containment, such as to cause direct damage or exposure to jet fuel of the systems within the containment.

The assessment also determined that key safety-related components located inside containment, including the reactor pressure vessel, steam generators, reactor coolant loop piping, safety depressurization valves, control rod drive mechanism, the RHR suction line motor operated valves, the RHR discharge line check valves and instrumentation and control equipment associated with core cooling are unaffected by shock-induced vibrations resulting from the impact of a large commercial aircraft.

The location and design of the control rod drive mechanism described in Sections 3.9.4 and 4.6, with the control rod drive mechanism located inside of the PCCV on top of the reactor vessel closure head such that upon loss of internal power distribution the control rods drop into the reactor core by gravity, are key design features for ensuring that the reactor will be tripped following the impact of an aircraft.

Regarding the SFP, the assessment determined that there are no aircraft impact scenarios that result in leakage from the SFP below the required minimum water level. The pool liner is not perforated and all SFP piping attachments are configured such that they will not allow water in the SFP to drain below the minimum water level. The design and location of the SFP and its supporting structures as described in Sections 3.8.4.4.1.2 and 9.1.2.2 and as depicted on Figure 3.8.4-6 are key design features for protecting the integrity of the SFP such that an impact of a large commercial aircraft would not result in leakage from the SFP below the required minimum water level.

19A.4.2 Plant Arrangement

The US-APWR plant design and arrangement of major structures described in Section 1.2.1.7 and Figures 1.2-1 through 1.2-48 are key design features. Specifically, the assessment credited the arrangement of, and design of, the following building features to limit the location and effects of potential aircraft strikes on the R/B and PS/Bs in the following locations:

1. The location and design of the Auxiliary Building (A/B) structure as described in Section 3.7.2.8.4 are key design features in protecting [ ](SRI) the R/B [ ](SRI) from the impact of a large commercial aircraft. [ ](SRI) (See Figures 1.2-9 and 1.2-36).

2. The location and design of the R/B structure, as described in Section 3.7.2.8.5, 3.8.4.4.1 and Figure 3J-1, are key design features in protecting the PCCV [ ](SRI) and the MCR from the impact of a large commercial aircraft.

3. Deleted

4. The location and design of the PS/Bs as described in Section 3.7.2.8.6 are key design features in protecting the [ ](SRI) R/B [ ](SRI) from the impact of a large commercial aircraft.

5. The physical separation of the east and west PS/Bs, as described in Section 3.7.2.8.6, 3.8.4.4.2, Figure 3J-3 and Figure3J-4, is a key design feature in limiting the loss of electrical power to key safety systems from the impact of a large commercial aircraft.

6. The design of the [ ](SRI) the R/B exterior wall, R/B exterior and inner wall [ ](SRI) the R/B exterior wall [ ](SRI) the R/B exterior wall [ ](SRI) the R/B exterior wall [ ](SRI) as described in Section 3.8.4.4.1 and Figure 3J-1 are key design features in protecting key safety equipment in the R/B.

7. Properties of concrete and reinforcement bars, as described in Section 3.8.4.6.1.3, 3.8.5.4 and Table 3.8.5-2, are key design features in protecting key safety equipment in the R/B.

8. Deleted

19A.4.3 Fire Barriers and Fire Protection Features

The design and location of 3-hour fire barriers, including fire doors, penetration seals, dampers and watertight fire doors that separate the safety divisions within the R/B and east and west PS/Bs, are key design features for the protection of safety-related core cooling equipment within these buildings from the impact of a large commercial aircraft. The assessment credited the design and location of fire barriers (including doors) as depicted on Figures 9A-1 through 9A-12 to limit the effects of internal fires created by the impact of a large commercial aircraft. In addition, certain fire barriers, including doors, fast-acting blast dampers and penetration seals, are credited for 5 psid. These 5 psid barriers are identified on Figures 9A-1 through 9A-12. These key design features ensure at least one complete division of safety-related mechanical ECCS equipment and necessary support systems to include cooling water, electrical power supply and distribution, and instrument and control within the R/B and east and west PS/Bs is available to provide core cooling following the impact of a large commercial aircraft.

19A.4.4 Core Cooling Features

The design and physical separation (by fire barriers as described in Section 19A.4.3) of the emergency core cooling systems (described in Section 6.3), of the emergency feedwater system (described in Section 10.4.9), of the main steam depressurization valves (described in Section 10.3.2.3.3), and of the residual heat removal (RHR) system (described in Sections 5.4.7) are key primary system design features for assuring core

cooling following a reactor trip in response to an aircraft impact event. The design and physical separation of the component cooling water system (CCWS) (described in Section 9.2.2), of those portions of the essential service water system located in the R/B and PS/ Bs (described in Section 9.2.1), of the Class 1E electrical power supply and distribution system (described in Section 8.3), and of the safety-related instrumentation and control system (described in Chapter 7) including the physical separation between the MCR and the RSC and the ability to power the Class 1E MOV inverters from the AAC-GTGs are key supporting system design features for assuring core cooling following a reactor trip in response to an aircraft impact event. The action of tripping or shutting down the reactor ensures that the fuel in the reactor is kept subcritical.

Following shutdown from power operation, core cooling is maintained by the emergency feedwater system as described in Section 10.4.9. Primary system is maintained at operating pressure and temperature by adjusting emergency feedwater flow to match the decay heat rate from the reactor core. Under these conditions, additional boration is unnecessary to maintain subcriticality. In the event the emergency feedwater system is unavailable, the emergency core cooling system is available to maintain core cooling by "feed and bleed" using the safety depressurization valves described in Section 5.4.12 and the safety injection system described in Section 6.3.

In the event the CCWS is unavailable, the capability of the chemical volume and control system to provide seal-water flow to the reactor coolant pumps described in Section 9.3.4.1.2.4 and the capability of the fire protection water system and the non-essential chilled service water system to provide water to cool the charging pumps, described in Table 19.1-1 (Sheet 2 of 6) and shown on Figures 9.2.2-1 (Sheet 6 of 9) and 19.1-2 (Sheets 33 of 42 and 34 of 42), are key design features. The emergency feedwater system is available to provide decay heat removal.

For an aircraft impact during plant shutdown with the reactor vessel head removed and water level at or near the reactor vessel head flange, the reactor core is cooled by the RHR system as described in Section 5.4.7. [

](SRI) To ensure that one train of the RHR system is available following the impact of a large commercial aircraft on the R/B, administrative controls require that no trains of the RHR system are out of service when the reactor vessel head is removed and the reactor vessel water level is at or near the reactor vessel head flange.

If the RHR system is unavailable due to the loss of the ultimate heat sink, the capability of the charging pump to take suction from the refueling water storage pit to provide make-up water for the reactor coolant system, described in Sections 9.3.4.2.1 and 9.3.4.2.6.1 and shown on Figure 9.3.4-1 (Sheet 4 of 7), and the capability of the fire protection water system and the non-essential chilled water system to provide water to cool the charging pumps, described in DCD Table 19.1-1 (Sheet 2 of 6) and shown on DCD Figures 9.2.2-1 (Sheet 6 of 9) and 19.1-2 (Sheets 33 of 42 and 34 of 42), and the capability to provide make-up water to the reactor coolant system by direct gravitational feed from the spent

fuel pit, described in Sections 5.4.7.2.3.6 and 19.1.6.1 and shown on Figures 9.1.3-1, 6.2.2-1 and 5.1-2, are key design features. Additionally, the capability of the refueling water recirculation pump to supply water from the RWSP to the spent fuel pit, described in Section 19.1.6.1, is a key design feature.

19A.5 Conclusions of Assessment

This assessment concludes that key design features and functional capabilities of the US-APWR ensure adequate protection of public health and safety in the event of an impact of a large commercial aircraft, as defined by the NRC. The postulated aircraft impacts would not impair the US-APWR's core cooling capability or spent fuel pit integrity. The assessment resulted in identification of key design features and functional capabilities described in Section 19A.4, changes to which are required to be controlled in accordance with 10 CFR 50.150(c).

19A.6 References

19A-1 Deleted

19A-2 NEI 07-13, "Methodology for Performing Aircraft Impact Assessments for New Plant Designs," Revision 8, April 2011.

19A-3 Deleted

APPENDIX 19B SUMMARY OF PSMS RELIABILITY ANALYSIS IN PRA

CONTENTS

Page

19B Summary of PSMS Reliability Analysis in PRA 19B-1

TABLES

Page

Table 19B-1 Comparison of TS requirements for reactor trip system 19B-3

Table 19B-2 Comparison of TS requirements for ESF actuation system..... 19B-4

Table 19B-3 Sensitivity analyses cases 19B-5

19B Summary of PSMS Reliability Analysis in PRA

In the US-APWR Base PRA, the Protection and Safety Monitoring System (PSMS) is modeled in the Fault Tree Analysis (FTA) at the module level (Refer to Attachments 6A.12, 6A.13 and 6A.14.10 of MUAP-07030 “US-APWR Probabilistic Risk Assessment”). With one exception, described below, the unavailability of each module of the reactor trip (RT) and engineered safety features (ESF) actuation functions of the PSMS is calculated based on the bounding longest Completion Time (CT), Bypass Time (BT) and Surveillance Frequency (SF) defined in the US-APWR Technical Specifications (TS). Due to the use of digital technology, some of these times are extended from past industry experience, as represented by the Westinghouse Owners Group (WOG) Standard Technical Specifications (STS). For the RT and ESF actuation functions Tables 19B-1 and 19B-2, respectively, show the times for the US-APWR TS, the corresponding times for the WOG STS and the times used in the US-APWR Base PRA.

In the PRA unavailability calculation, a single FTA model is used to represents all RT and ESF functions of the PSMS. As explained above, for this representative model, the longest values of CT, BT and SF are applied for the RPS and ESFAS subsystems of the PSMS in order to bound all RT and ESF actuation functions. For the SLS subsystem of the PSMS, the longest TS values of CT and BT are also applied. However, for the SLS subsystem, the PRA credits a more realistic test frequency value, which is the frequency for in-service testing (IST) of the mechanical components, which are actuated by the SLS. Since the SLS controls these mechanical components, and the SLS is actuated during IST, the IST value is applicable.

With the bounding longest values of CT, BT and SF for most of the PSMS, as defined by the US-APWR TS, and the IST SF values for the SLS portion of the PSMS, the US-APWR Base PRA shows acceptable CDF results. In addition, to supplement the Base PRA results, sensitivity analyses are also performed to show how changes in the PSMS CT, BT and SF affect the resulting CDF (Refer to Attachment 18A.1 of MUAP-07030 “Probabilistic Risk Assessment”). The Base PRA (Case 0) and the additional evaluated cases (Case 1-4) are summarized in Table 19B-3. The evaluated cases reflect (1) comparisons for using shorter WOG STS values for CT, BT and SF, instead of the US-APWR TS values used in the Base PRA, and (2) comparisons for longer US-APWR TS values for the SLS SF, instead of the SLS IST value used in the Base PRA. For each Case, Table 19B-3 shows the changes from the Base PRA (Case 0), the resulting CDF for internal events, and a comparison of that CDF to the CDF for the Base PRA (Case 0). The following summarizes each Case:

Case 0: Base case of US-APWR PRA, using US-APWR TS CT, BT SF value with IST value for SLS SF.

Case 1: This case was performed to assess the impact of using the US-APWR IST value for the SLS SF in the Base PRA (Case 0). The US-APWR IST value used in the Base PRA is more frequent than the US-APWR TS SF value for the SLS. In this case the SLS IST SF value used in Case 0, is replaced with the US-APWR TS SF value. The results show that when the less frequent US-APWR TS SF value is used, the CDF increases 1.9% compared to the Base PRA (Case 0).

Case 2: This case was performed to assess the impact of using the US-APWR TS CT and BT values in the Base PRA (Case 0). Some of the US-APWR TS CT and BT values used in the Base PRA are longer than the WOG STS CT and BT values. In this case the US-APWR TS CT and BT values used in Case 0, are replaced with the WOG STS CT and BT values. The results show that when the more frequent WOG STS CT and BT values are used, the CDF decreases by 0.1% compared to the Base PRA (Case 0).

Case 3: This case was performed to assess the impact of using the US-APWR TS SF values, and the IST SF value for the SLS in the Base PRA (Case 0). Some of the US-APWR TS SF values are less frequent than the WOG STS SF values. In this case the US-APWR TS SF values and the SLS IST SF value used in Case 0, are replaced with the WOG STS SF values. The results show that when the more frequent WOG STS SF values are used, the CDF decreases by 4.2% compared to the Base PRA (Case 0).

Case 4: This case was performed to assess the impact of using the US-APWR TS CT, BT and SF values, and the IST SF value for the SLS in the Base PRA (Case 0). Some of the US-APWR TS CT and BT values are longer than the WOG STS CT and BT values, and some of the US-APWR TS SF values are less frequent than the WOG STS SF values. In this case the US-APWR TS CT, BT and SF values, and the IST SF value for the SLS, are replaced with the WOG STS CT, BT and SF values. The results show that when the more frequent WOG STS CT, BT and SF values are used, the CDF decreases by 4.3% compared to the Base PRA (Case 0).

As shown in Table 19B-3 for Cases 1-4, the changes in CDF from internal events, compared to the Base PRA (Case 0), are less than 5% for all comparison cases. Therefore, the sensitivity analyses shows (1) an insignificant risk impact for the extension of the US-APWR TS values from the WOG STS values and (2) an insignificant risk impact when the actual US-APWR TS values for SLS surveillance frequency are applied, instead of the IST values.

It is noted that there are also differences in the values of CT, BT and SF between the US-APWR TS and WOG STS for Manual Initiation of RT and ESFAS. However, as indicated in the risk important analysis documented in this Chapter, the Manual Initiation functions are considered negligible for CDF reduction (i.e., other failures dominate the failure of RT or ESF actuation). Therefore, no sensitivity analyses were performed for Manual Initiation functions.

Table 19.B-1 Comparison of TS requirements for reactor trip system

Function	US-APWR TS *0, *1			WOG STS *1			Value Used in US-APWR Base PRA *2			
	CT	BT	SF	CT	BT	SF	CT	BT	SF	Surveillance Test
High Pressurizer Pressure/ Low SG Water Level	1h	NA	12h	72h	12h	12h	72h *3	12h *4	12h	CHANNEL CHECK
			24M			184d			24M	MEMORY INTEGRITY CHECK*11
			24M			18M			24M	CHANNEL CALIBRATION
Automatic Trip Logic (RPS, except output)	24h/48h *8	4h	24M	24h/48h *5	4h	92d STB	72h *6	4h	24M	MEMORY INTEGRITY CHECK*11
RPS output and Reactor Trip Breaker*7	24h/48h *8	NA	62d STB *9	24h/48h *8	4h	62d STB	48h *10	NA	62d STB	TRIP ACTUATION DEVICE OPERATIONAL TEST

*0: In the US-APWR TS columns, the values that are different from the WOG STS are underlined.
*1: These columns indicate the Tech Spec values for the specific functions represented in the Function column.
*2: The values in these columns bound the US-APWR TS values for the functions represented in the Function column, and all other RT functions.
*3: 72 hours CT is used in the unavailability calculation since other RT functions have 72 hours CT.
*4: 12 hours BT is used in the unavailability calculation since other RT functions have 12 hours BT.
*5: Automatic Trip Logic in Mode 1 and 2 has 24 hours CT. In other Modes, Automatic Trip Logic has 48 hours CT.
*6: 72 hours CT is used since the same I&C equipment is shared between the channel processing part and logic processing part of RPS, and the longest CT for the channel processing part is 72 hours, as explained in Item 3, above.
*7: Includes the mechanical portion of the reactor trip breakers, and the reactor trip breaker undervoltage mechanisms and shunt trip mechanisms.
*8: Only the mechanical portion of the RTB in Mode 1 and 2 has 24 hours CT. RPS output, mechanical portion of the RTB in other Modes, and reactor trip breaker undervoltage mechanisms and shunt trip mechanisms have 48 hours CT.
*9: This number is underlined because the US-APWR has four trains. Therefore the test frequency for the same component is not the same as for WOG STS.
*10: 48 hours CT is used in all RTB unavailability calculations for simplicity.
*11: The CHANNEL OPERATIONAL TEST and the ACTUATION LOGIC TEST, as used in the WOG STS, correspond to the MEMORY INTEGRITY CHECK (SR 3.3.1.6) in the US-APWR TS.

Table 19.B-2 Comparison of TS requirements for ESF actuation system

Function	US-APWR TS *0, *1			WOG STS *1			Value Used in US-APWR Base PRA *2			
	CT	BT	SF	CT	BT	SF	CT	BT	SF	Surveillance Test
High Containment Pressure/ Low Pressurizer Pressure	72h/ 1h*3	12h/ NA*3	12h	72h	12h	12h	72h *4	12h *5	12h	CHANNEL CHECK
			24M			184d			24M	MEMORY INTEGRITY CHECK*9
			24M			18M			24M	CHANNEL CALIBRATION
Actuation Logic (ESFAS)	24h	4h	24M	24h	4h	92d STB*6	72h *8	4h	24M*6	MEMORY INTEGRITY CHECK*9 and Manual Initiation TADOT*6
Actuation Logic (SLS)						92d*7			92d*7	In-service Test for Mechanical Components*7
Actuation Outputs (SLS)										In-service Test for Mechanical Components*7

*0 In the US-APWR TS columns, the values that are different from WOG STS are underlined.

*1: These columns indicate the Tech Spec values only for ECCS actuation, as a representative function.

*2: These columns bound all ESFAS functions.

*3: In the US-APWR TS, Pressurizer Pressure has 1 hour CT and no bypass capability, while Containment Pressure has 72 hours CT and 12 hours BT.

*4: 72 hours CT is used in the unavailability calculation since other ESF actuation functions have 72 hours CT.

*5: 12 hours BT is used in the unavailability calculation since other ESF actuation functions have 12 hours BT.

*6: The ACTUATION LOGIC TEST (92 days Staggered Test Basis (STB)) and the MASTER RELAY TEST (92 days STB) of the WOG STS, correspond to the MEMORY INTEGRITY CHECK*9 (SR 3.3.2.2) and ESFAS Manual Initiation TRIP ACTUATING DEVICE OPERATIONAL TEST (TADOT) (SR 3.3.2.5) (24 months) in the US-APWR TS.

*7: The SLAVE RELAY TEST (92 days) of the WOG STS corresponds to the test of the Actuation Logic (SR 3.3.2.2) and Actuation Outputs (SR 3.3.2.3) of the US-APWR SLS (24 months). However, the US-APWR In-service Test for Mechanical Components (92 days) also confirms the Actuation Logic and Actuation Outputs of the SLS.

*8: 72 hours CT is used in unavailability calculation since the Emergency Feedwater Actuation Function has 72 hours CT.

*9: The CHANNEL OPERATIONAL TEST and ACTUATION LOGIC TEST, as used in the WOG STS, correspond to the MEMORY INTEGRITY CHECK (SR 3.3.2.2) in the US-APWR TS.

Table 19.B-3 Sensitivity analyses cases

Analysis Case	Applied Values for PSMS Unavailability Calculation		Internal events CDF [/RY]	Deviation of CDF Compared to Case 0 [/RY (%)]
	CT and BT	SF		
Case 0	US-APWR TS	US-APWR TS (IST frequency is applied to SLS)	1.03E-6	-
Case 1	US-APWR TS	US-APWR TS (including SF for SLS*)	1.05E-6	2.0E-08 (+1.9%)
Case 2	WOG STS*	US-APWR TS (IST frequency is applied to SLS)	1.03E-6	-1.0E-09 (-0.1%)
Case 3	US-APWR TS	WOG STS*	9.86E-7	-4.3E-08 (-4.2%)
Case 4	WOG STS*	WOG STS*	9.85E-7	-4.4E-08 (-4.3%)

*Changes from Base PRA (Case 0)