3.9 Mechanical Systems[1] and Components

3.9.1 Special Topics for Mechanical Components

This section provides information on methods of analysis for seismic category I components and supports, including both those designed as ASME Boiler and Pressure Vessel Code ("the Code" [Reference 3.9-1]), Section III, Division 1, Class 1, 2, 3, or core support and those not covered by the Code. Information on design transients for ASME Code, Section III, Class 1 and core support components and supports is also provided.

3.9.1.1 Design Transients

In order to assure high quality for the component and piping in the RCS, the transient conditions selected for equipment design evaluation are based on the conservative estimates of the magnitude and frequency of the temperature and pressure transients resulting from various operating conditions in the plant. To a large extent, the specific transients considered for design are based on engineering judgment and experience.

The design transients give fluid system pressure, temperature, flow transients, and frequency for equipment fatigue analysis and stress analysis, and these do not cover the seismic loading and other mechanical loading on each component. Seismic loading and other mechanical loading are described in Subsection 3.9.3. Subsection 3.9.1 addresses the design transient item of each service and test condition, with its explanation and occurrence numbers. The 60 year design life is considered when determining the number of occurrences of each transient. The detail of design transient is described in the Technical Report (Reference 3.9-57).

Components are evaluated using the design transients in accordance with the requirements for Class 1 in ASME Code, Section III (Reference 3.9-1).

ASME Code, Section III (Reference 3.9-1) defines the following five conditions which apply to the design of RCS Class 1 components, auxiliary Class 1 components, RCS component supports, and reactor internals.

Level A Service Conditions – (Normal Conditions)

These conditions include any condition in the course of system startup, operation in the design power range, hot standby, and system shutdown other than Level B, Level C, or Level D service conditions or testing conditions. Tests, in which pressure is not greater than the component design pressure, are considered to be normal condition design transients.

Level B Service Conditions – (Upset Conditions, Incidents of Moderate Frequency)

These conditions include any deviations from Level A service conditions anticipated to occur often enough that the design includes the capability to withstand the conditions without operational impairment. The Level B service conditions include those transients

1. Section 4.2 of the FSAR addresses fuel system design information.

resulting from any single operator error or control malfunction, transients caused by a fault in a system component requiring its isolation from the system, and transients due to a loss of load or power. Level B service conditions include any abnormal incidents not resulting in a forced outage and also forced outages for which the corrective action does not include any repair of mechanical damage. The estimated duration of Level B service condition is included in the design specifications.

Level C Service Conditions – (Emergency Conditions, Infrequent Incidents)

These conditions include those deviations from Level A service conditions that require shutdown for correction of the conditions or repair of damage. These conditions have a low probability of occurrence but are included to establish that no gross loss of structural integrity will result as a concurrent effect of any damage developed in a system. The postulated occurrences for such events which result in more than 25 strong stress cycles are evaluated for cyclic fatigue using Level B service limits. Strong stress cycles are those having an alternating stress intensity value greater than that for 10^6 cycles from the applicable fatigue design curves.

Level D Service Conditions – (Faulted Conditions, Limiting Faults)

These conditions include those combinations of conditions associated with extremely low-probability postulated events whose consequences are such that the integrity and operability of the nuclear energy system may be impaired to the extent that considerations of public health and safety are involved. Such considerations require compliance with safety criteria as may be specified by regulatory authorities.

Testing Conditions

Testing conditions are those pressure overload tests that include primary and secondary hydrostatic tests and SG tube leak tests specified. Other types of tests are classified under one of the other service condition categories.

The design transient selected is also considered the plant condition (PC) categorization and frequency in ANS N51.1 (Reference 3.9-2), but the frequency in some cases is different from ANS N51.1 (Reference 3.9-2).

The design transients and the number of occurrences for fatigue analysis of components are shown in Table 3.9-1.

The effect of thermal stratification and thermal striping is considered in the stress and fatigue evaluations of components and piping. The issues identified in NRC Bulletins 88-08 and 88-11 (References 3.9-3 and 3.9-4) are factored into this analysis. Confirmation of design margins and acceptable operational conditions is verified during Hot Functional Testing as described in Chapter 14.

3.9.1.1.1 Level A Service Conditions (Normal Conditions)

The RCS transients under normal operating transients (PC-1 in accordance with ANS N51.1 [Reference 3.9-2]) are considered as follows:

- RCP startup and shutdown
- Plant heat-up and cooldown
- Ramp load increase and decrease between 0 and 15% of full power
- Ramp load increase and decrease at 5% of full power per minute
  - Ramp load increase and decrease between 15% and 100% of full power (5% of full power per minute)
  - Ramp load increase and decrease between 50% and 100% of full power (5% of full power per minute)
- Step load increase and decrease of 10% of full power
- Large step load decrease with turbine bypass
- Steady-state fluctuations and load regulation
- Boron concentration equalization
- Main Feedwater cycling
- Core lifetime extension
- Refueling
- Turbine roll test
- Primary leakage test
- Secondary leakage test

3.9.1.1.1.1 RCP Startup and Shutdown

The RCPs are started at the beginning of heat-up and stopped at the end of cooldown, and including recovery from some transients, such as a loss of power.

When the RCP is started and stopped, it is assumed that variations in temperature on the RCS primary side, and variations in pressure and temperature in the pressurizer, are negligible. Temperature and pressure changes in the SG secondary side are also assumed negligible. The only significant variables are the primary system flow and the pressure changes resulting from the pump's operations.

The following cases are represented for this transient:

- Case 1 – First Pump Startup

  This case represents the variations in the RCL flow that accompany the startup of the first pump. This case results in a higher dynamic pressure loss in the loop

containing the starting pump, but the magnitude of the flow change is less than in Case 2.

- Case 2 – Last Pump Startup

  This case shows the variations in the RCL flow that accompany the startup of the fourth pump. Initially, flow exists through this pump in the reverse direction as the result of operating the other pumps.

This transient is assumed to occur 3,000 times during the plant design life.

3.9.1.1.1.2 Plant Heat-up and Cooldown

Plant heat-up operations are conservatively represented by uniform ramp temperature changes of 50°F per hour which bounds the heat-up rate resulting from operation of four RCPs. The heat-up begins from ambient temperature and ends at the no-load temperature. For the pressurizer vessel, the heat-up rate is 100°F per hour.

Plant cooldown operations are conservatively represented by uniform ramp temperature changes of 100°F per hour, which rate bounds the cooldown rate resulting from the steam dump system and RHRS.

The cooldown begins from a no-load temperature and ends at an ambient temperature. For the pressurizer vessel, the cooldown rate is 200°F per hour.

Plant heat-up and cooldown operations is assumed to each occur 120 times during the plant design life.

3.9.1.1.1.3 Ramp Load Increase and Decrease Between 0 and 15 Percent of Full Power

The ramp load increase and decrease transients between the 0 and 15% load are represented by continuous and uniform ramp steam load changes, requiring 30 minutes for load increase and five minutes for load decrease. During load increase, the reactor coolant temperatures are increased from their no-load values to their programmed temperature values at 15% load. During load decrease, the reactor coolant temperatures are decreased from the programmed temperature values at 15% load to the no-load values.

These transients are assumed to each occur 600 times during the plant design life.

3.9.1.1.1.4 Ramp Load Increase and Decrease at Five Percent of Full Power per Minute

The ramp load increase and decrease operations are assumed to be two cases. The first case is the uniform ramp power changes of 5% per minute between the 15% and 100% power. The other case is the uniform ramp power changes of 5% per minute between the 50% and 100% power.

- Load increase and decrease between 15% and 100%

This is the maximum load change under automatic reactor control. The reactor coolant temperature changes according to the programmed temperature based on the load. This transient is assumed to occur 600 times during the plant design life.

- Load increase and decrease between 50% and 100%

  This load change is based on the daily load follow operation which varies between 50% and 100% power, and requires the boron concentration change in the reactor coolant.

The reactor coolant temperature changes according to the programmed temperature based on the load. This transient is assumed to occur 19,200 times during the plant design life.

3.9.1.1.1.5 Step Load Increase and Decrease of Percent of Full Power

A 10% step change in the load demand is assumed to result from a change in the turbine control valve due to disturbances in the electrical network to which the plant output is connected. The RCS is designed to return to plant equilibrium without a reactor trip (RT) after a 10% step change in the turbine load demand initiated from the nuclear plant equilibrium conditions between 15% and 100% of full load (power range for automatic reactor control).

After a step load decrease in the turbine, the secondary-side steam pressure and temperature begin to increase. Then, the RCS average temperature and pressurizer pressure also increase. Because of the power mismatch between the reactor and the turbine, the coolant temperature increases, and the control system automatically inserts the control rods to reduce the core power. Then, the reactor coolant temperature decreases from its peak value to a value below its initial value. Pressurizer pressure also decreases from its peak value to a value with the reactor coolant decreasing temperature trend, then pressurizer heaters automatically operate to return the plant pressure to its nominal value.

After a step load increase in the turbine, the reverse transient occurs. The secondary-side steam pressure and temperature begin to decrease, and then the reactor coolant average temperature and pressure decrease. The control system automatically withdraws the control rods to increase the core power.

The decreasing pressure returns to its normal value by actuation of the pressurizer heaters. These transients are assumed to each occur 600 times during the plant design life.

3.9.1.1.1.6 Large Step Load Decrease with Turbine Bypass

This transient is assumed to occur with a large step decrease in the turbine load from full power resulting from a mismatch in power between reactor and turbine. This operation causes secondary-side turbine bypass actuation automatically in order to prevent a RT and the opening of the main steam safety valve. Following the large step load decrease, the reactor power is reduced at a controlled rate by inserting the control rods. A step load

change to house load without a RT is applied to the design. This transient is assumed to occur 60 times during the plant design life.

3.9.1.1.1.7 Steady-State Fluctuations and Load Regulation

Reactor coolant pressure and temperature are able to fluctuate during normal operation. For design purposes, two cases of fluctuations are considered in the design transient.

- Case 1 - Steady-state fluctuations

  This case represents the fluctuations without load regulation operation. This transient is assumed to occur 1×10^6 times during the plant design life.

- Case 2 – Load regulation

  This case represents the fluctuations with load regulation operation for grid frequency control. The frequency of fluctuation in RCS is large because of small and rapid fluctuations in load. This transient is assumed to occur 8×10^5 times during the plant design life.

The limiting case of load fluctuations is used for component evaluations.

3.9.1.1.1.8 Boron Concentration Equalization

After large change in boron concentration in the RCS because of a borating operation or a dilution operation, the pressurizer spray is operated in order to equalize the boron concentration between the RCL and the pressurizer. This equalizing operation can be performed by manually operating the pressurizer backup heaters. The pressure is maintained at 2,250 psia by spray and backup heater operation until the boron concentration is equalized. Since the change of boron concentration in the RCS occurs during daily load follow operation, it is assumed that this operation is assumed to be performed twice a day and the number of occurrences is 39,600. The operations result in no significant effects on the SG secondary side.

3.9.1.1.1.9 Main Feedwater Cycling

The main feedwater cycling is assumed to occur at hot standby or no-load condition. Relative small amounts of decay heat or RCP heat results in a low steam generation rate and slightly decreases the SG water level. To compensate for the decreasing level, the SGs are designed to be supplied continuously using the SG water filling control valves. However, the design transient of main feedwater cycling is assumed to supply the SG intermittently. This transient is assumed to occur every two hours at hot standby or no-load, and is assumed to occur 2,100 times during the plant design life.

3.9.1.1.1.10 Core Lifetime Extension

This transient is assumed to occur at the end of an operating cycle when the critical boron concentration is required to reach less than achievable, full thermal power condition. The method of core life extension is as follows.

- The RCS average temperature is decreased to below the normal programmed temperature; this results in adding reactivity to the core through the negative moderator temperature coefficient.
- The turbine is controlled with a full load until the turbine inlet valves are fully opened.

The US-APWR is not performing core lifetime extension evaluations, however, the core lifetime extension is included in the design transients considering the case where the core lifetime extension is conducted in the plant which adopts the US-APWR design in the future.

This transient is assumed to occur 60 times during the plant design life.

3.9.1.1.1.11 Refueling

After the temperature of the reactor coolant is decreased to 140°F at the end of the plant cooldown operations, the RV head is removed and the refueling canal is filled. The refueling water is supplied by the refueling water recirculation pump from the RWSP, which is assumed to be 32°F, into the RCS. The cold water at 32°F is assumed to flow directly to the RV through the reactor coolant piping. This transient is assumed to occur 60 times during the plant design life.

3.9.1.1.1.12 Turbine Roll Test

This transient occurs during the required check of the turbine cycle during hot functional testing. The RCP is used to heat the reactor coolant to the operating temperature (no-load conditions), and the SG is used to perform a turbine roll test. The plant cooldown rate during this test exceeds the 100°F per hour design rate. This transient is assumed to occur 10 times during the plant design life.

3.9.1.1.1.13 Primary-Side Leakage Test

A primary-side leakage test is performed after opening of the RCS. During this test, the primary system pressure is raised to 2,500 psia (i.e., design pressure) and the system temperature above the minimum temperature given by the RV material ductility requirements, and then the system is inspected to establish that a leak does not occur. This transient is assumed to occur 120 times during the plant design life.

3.9.1.1.1.14 Secondary-Side Leakage Test

A secondary side leakage test is performed to check closures for leakage after the opening of the secondary system. The SG secondary side is assumed to be pressurized to its design pressure. This transient is assumed to occur 120 times during the plant design life.

3.9.1.1.2 Level B Service Conditions (Upset Conditions)

The RCS under upset condition transients (PC-2 and PC-3 in accordance with ANS N51.1 [Reference 3.9-2]) are considered as follows:

- Loss of load
- Loss of offsite power
- RT from full power
  - Case A – with no inadvertent cooldown
  - Case B – with cooldown and no safety injection
  - Case C – with cooldown and safety injection
- Control rod drop
- Cold over-pressure
- Inadvertent safeguards actuation
- Partial loss of reactor coolant flow
- Inadvertent RCS depressurization
- Excessive feedwater flow
- Loss of offsite power with natural circulation cooldown
- Emergency feedwater cycling
- Partial loss of emergency feedwater
- Safe shutdown

3.9.1.1.2.1 Loss of Load

This transient occurs when there is a step decrease in the turbine load from full power (i.e., turbine trip) without an immediate RT. This transient results in the most severe pressure transient on the RCS in upset conditions. This transient is applied to confirm the integrity of component design. This transient is assumed to occur 60 times during the plant design life.

3.9.1.1.2.2 Loss of Offsite Power

This transient applies conservative assumption as follows

- Loss of feedwater flow occurs at the beginning of the event
- RT occurs upon receipt of low SG water level signal
- Simultaneously with RT, a loss of offsite power occurs

As a result, all RCPs, condensate pumps, and others connected to the turbine-generator bus are tripped.

As the RCPs are tripped, the RCS flow enters a natural circulation condition. The core residual heat is removed through the SGs, which receive feedwater from the emergency feedwater pump system. For this transient, reactor coolant temperature stabilizes at some equilibrium conditions. This transient is assumed to occur 60 times during the plant design life.

3.9.1.1.2.3 RT from Full Power

RTs from full power are considered to occur for many reasons. Upon a RT, the reactor coolant temperature and pressure promptly decrease from full power values because of the insertion of the control rods caused by RT. Then the conditions of the SG secondary side change due to continued heat transfer from the reactor coolant through the SG tubes. This transient continues until the reactor coolant and SG secondary side temperatures are stabilized at no-load conditions. A RT from full power is assumed to occur 100 times during the plant design life. The following three RT cooldown transients are considered.

- Case A – RT with no inadvertent cooldown

  The RCS and the secondary system are controlled to become no-load conditions and are stabilized at no-load. This transient is assumed to occur 60 times during the plant design life.

- Case B – RT with cooldown and no safety injection

  This transient is considered after the RT with a malfunction (stuck open) of one main feedwater regulation valve. The main feedwater pumps keep supplying water to the SGs until reaching to the safety injection setpoint, and then the main feedwater is isolated by closure of main feedwater isolation valves. Consequently, the RCS temperature and pressure decrease. The emergency feedwater flow is terminated by the operator and the plant is then stabilized. This transient is assumed to occur 30 times during the plant design life.

- Case C – RT with cooldown and safety injection

  This transient is considered after the RT with a malfunction (stuck open) of one turbine bypass valve. The turbine bypass valve keeps cooling the RCS, and its pressure decreases to the safety injection setpoint. Upon the actuation of the SIS, the RCS temperature is decreased. The safety injection is terminated by the operator and the plant is then stabilized. This transient is assumed to occur 10 times during the plant design life.

3.9.1.1.2.4 Control Rod Drop

This transient occurs when one or more rod cluster assemblies inadvertently drop into the core due to the component failure or operator error. Because the reactor power is promptly decreased, the mismatch between the turbine load and reactor power causes the plant cooldown, and finally results in a RT on low pressurizer pressure.

This transient is assumed to occur 30 times during plant design life.

3.9.1.1.2.5 Cold Over-Pressure

RCS cold over-pressurization may occur at low temperature during plant heat-up or cooldown, and can occur with or without a steam bubble in the pressurizer. A cold over-pressurization is most severe when the RCS is in a water solid mode. The event is caused by an inadvertent equipment malfunction or an operator error. Cold over-pressure events are initiated by either a mass input that exceeds the normal letdown capabilities, or by a heat input that attempts to expand the RCS water volume. To assure compliance with the requirements of 10 CFR 50, Appendix G (Reference 3.9-5), the safety valve located in the residual heat removal (RHR) pump suction piping provides additional relieving capability of the RCS inventory. This transient is assumed to occur 30 times during the plant design life.

3.9.1.1.2.6 Inadvertent Safeguards Actuation

A spurious safety injection signal results in an immediate RT, and then, the high head safety injection pumps actuate. These pumps deliver water from the RWSP to the RCS. The controlled turbine bypass flow and feedwater flow removes the core decay heat. This transient continues until the operator terminates the safety injection pump and the plant is stabilized. This transient is assumed to occur 30 times during the plant design life.

3.9.1.1.2.7 Partial Loss of Reactor Coolant Flow

This transient applies to a partial loss of reactor coolant flow from full power. Two RCPs are tripped due to the loss of power to the pumps. Such a transient results in a RT on the low reactor coolant flow, and then the turbine bypass system actuates automatically. Flow reversal then occurs in the affected loops. This transient is assumed to occur 30 times during the plant design life.

3.9.1.1.2.8 Inadvertent RCS Depressurization

Several transients are considered as sudden depressurization in the RCS during normal operation. They include:

- The inadvertent opening of the safety depressurization valve
- The malfunction of a single pressurizer pressure controller that causes two pressurizer spray valves to open
- The inadvertent opening of one pressurizer spray valve
- The inadvertent opening of the auxiliary spray valve

Umbrella Case – In the above events, the safety depressurization valve actuation results in the most severe RCS pressure and temperature transients. This case is used as an umbrella case to conservatively represent the reactor coolant pressure and temperature variations. This transient is assumed to occur 30 times during the plant design life.

Inadvertent Auxiliary Spray – The inadvertent auxiliary spray transient represents the depressurization transient with the most significant temperature variations on portions of

the pressurizer, spray nozzle, and spray piping. If the auxiliary spray flow is inadvertently initiated, a rapid temperature change occurs at the pressurizer spray nozzle and on the pressurizer vessel. Therefore, in order to provide a conservative design condition for these components, an inadvertent auxiliary spray transient is selected. This transient is assumed to occur 15 times during the plant design life.

3.9.1.1.2.9 Excessive Feedwater Flow

This transient is assumed to result from the inadvertent opening of a main feedwater regulation valve during hot standby or no-load condition with the feedwater pump, condensate, and heater drain systems in operation. It is considered that the stem of a main feedwater regulation valve fails and that the valve opens fully. In the SG directly affected by the malfunctioning valve (failed loop), the feedwater flow step increases from a small flow at no-load to the value determined by the system resistance and the head of the operating feedwater pumps. The steam flow is assumed to remain at zero. Main feedwater is isolated by the closure of main feedwater isolation valve upon receipt of a safety injection signal, and the plant is then stabilized. This transient is considered to be bounded by RT with cooldown and no safety injection transient. The frequency of RT with cooldown and no safety injection transient includes the frequency of excessive feedwater flow transient.

3.9.1.1.2.10 Loss of Offsite Power with Natural Circulation Cooldown

This transient is the same as a loss of offsite power, except that RCS temperature is reduced by natural circulation and heat removal via SG with the operation of the emergency feedwater pumps and the opening of main steam depressurization valve. When the RCS temperature and pressure are reduced to RHR operating condition, the RHR provides RCS cooldown. This transient is considered to be bounded by plant cooldown transient. The frequency of plant cooldown transient includes the frequency of loss of offsite power with natural circulation cooldown transient.

3.9.1.1.2.11 Emergency Feedwater Cycling

The emergency feedwater cycling is assumed to occur after RT events. After RT, relative small amounts of decay heat or RCP heat results in a low steam generation rate and slightly decreases the SG water level. To compensate for the decreasing level, the SGs are designed to be supplied continuously using the emergency feedwater flow control valves by operator action. However, the design transient of emergency feedwater cycling is assumed to supply the SG intermittently. This transient is assumed to occur 700 times during the plant design life.

3.9.1.1.2.12 Partial Loss of Emergency Feedwater

This transient is assumed to result from the single failure of emergency feedwater pump after RT events. The shell side of a single SG not supplied by emergency feedwater pump is assumed to be emptied. The SG tube and secondary shell integrity are evaluated for this condition. This transient is considered to be identical to loss of offsite power. This transient is assumed to occur 30 times during the plant design life.

3.9.1.1.2.13 Safe Shutdown

This transient assumes RCS cooldown from no-load temperature and pressure to cold conditions using only safety-related systems. Boration of the RCS is initiated prior to cooling the RCS. The safety injection pumps are used to provide borated water to the RCS. The borated water is delivered to the RCS through the safety injection lines. To accommodate this addition to RCS inventory, continuous letdown is discharged from the emergency letdown line to the RWSP. RCS temperature is reduced by natural circulation and heat removal via SG with the operation of the emergency feedwater pumps and the opening of main steam depressurization valve. When the RCS temperature and pressure are reduced to RHR operation condition, RHR is operated for RCS cooldown. This transient is considered to be bounded by plant cooldown transient. The frequency of plant cooldown includes the frequency of safe-shutdown transient.

3.9.1.1.3 Level C Service Conditions (Emergency Conditions)

The RCS transients under emergency conditions (PC-4 in accordance with ANS N51.1 [Reference 3.9-2]) are considered as follows:

- Small LOCA
- Small steam line break
- Complete loss of flow
- Small feedwater line break
- SG tube rupture

3.9.1.1.3.1 Small LOCA

The small LOCA is considered as a break of small branch pipe of a reactor coolant pipe. This transient is assumed to occur five times during the plant design life.

3.9.1.1.3.2 Small Steam Line Break

A small steam line break is considered as a break equivalent to a main steam relief valve pipe break. This transient is assumed to occur five times during the plant design life.

3.9.1.1.3.3 Complete Loss of Flow

This accident applies to a complete loss of flow from full power resulting from the simultaneous loss of power to all RCPs. The consequences are a RT on low RCP speed, and a turbine trip results from RT. This transient is assumed to occur five times during the plant design life.

3.9.1.1.3.4 Small Feedwater Line Break

This transient applies to a small break in the high pressure cleanup piping. The main feedwater flow, in the affected loop, results in the fluid spilling through the break. No main

feedwater is supplied to either of SG and then all of SG water level decrease. Upon receipt of low SG water level signal, the reactor is tripped and the emergency feedwater pumps are actuated automatically. This transient is assumed to occur five times during the plant design life.

3.9.1.1.3.5 SG Tube Rupture

This transient applies to the double-ended rupture of a single SG tube resulting in decreases in pressurizer water level and reactor coolant pressure. The reactor is manually tripped. The RT initiates a turbine trip. And then, the emergency feedwater pumps are actuated automatically upon receipt of low SG water level signal. The RCS pressure decreases continuously after the trip because of continued primary to secondary leakage through the ruptured SG tube. The continued RCS leakage results in an actuation of the safety injection pump. This transient is assumed to occur five times during the plant design life.

3.9.1.1.4 Level D Service Condition (Faulted Conditions)

The RCS under faulted condition transients (PC-5 in accordance with ANS N51.1 [Reference 3.9-2]) are considered as follows:

- Reactor coolant pipe break (large LOCA)
- Large steam line break
- Large feedwater line break
- RCP locked rotor
- Control rod ejection

These accidents are assumed to each occur once during the plant design life.

3.9.1.1.4.1 Reactor Coolant Pipe Break (Large LOCA)

After a rupture of a reactor coolant pipe, the primary system pressure decreases rapidly. This rapid decrease of pressure causes the primary system temperature to decrease. Because of the rapid blowdown of coolant from the breaking point of the system and the comparatively large heat capacity of the metal portions of the components, the metal will remain at relative high temperature during blowdown. The SIS is actuated to inject water at a minimum temperature into the RCS.

3.9.1.1.4.2 Large Steam Line Break

This accident applies to a double-ended rupture of a main steam line. The analyses are based on the following conservative assumptions:

- The plant is initially at no-load condition
- The steam line break results in an immediate RT

- Main steam isolation valves are initially open

3.9.1.1.4.3 Large Feedwater Line Break

This accident applies to the double-ended rupture of a main feedwater line resulting in a rapid blowdown of the affected SG and the termination of the feedwater flow to the others. The feedwater line break results in immediate reactor and turbine trips. The emergency feedwater pumps are automatically actuated on low SG water level.

3.9.1.1.4.4 RCP Locked Rotor

This accident applies to the seizure of the rotating assembly of a RCP rotor operating at full power. The RT occurs rapidly, as the result of low coolant flow in the affected cold leg. In order to conservatively determine the increase in pressure due to the reduction in flow, the seizure is assumed to occur instantaneously.

3.9.1.1.4.5 Control Rod Ejection

This accident applies to the single most reactive control rod being instantaneously ejected from the core. This reactivity insertion in a particular region of the core causes a severe pressure increase in the RCS.

3.9.1.1.5 Test Conditions Transients

The RCS under test condition transients are as follows:

- Primary-side hydrostatic test
- Secondary-side hydrostatic test

3.9.1.1.5.1 Primary-Side Hydrostatic Test

Both factory and plant site hydrostatic tests occur as a result of component or system testing. This hydrostatic test is performed at a water temperature compatible with reactor material ductility requirements and a test pressure of 3,107 psig (1.25 times design pressure). This transient is assumed to occur five times during the plant design life.

3.9.1.1.5.2 Secondary-Side Hydrostatic Test

The secondary side of the SG is pressurized to 1.25 times the design pressure, with a minimum water temperature of 70°F. This transient is assumed to occur five times during the plant design life.

3.9.1.2 Computer Programs Used in Analyses

3.9.1.2.1 List of Programs

A number of computer programs are used for static, dynamic, and hydraulic transient analysis. The computer programs used in piping analysis are listed in Section 3.12. The following is a list of programs used for the mechanical system component analysis.

- Abaqus — Abaqus is a computer program for temperature distribution analysis and stress analysis of components.(Reference 3.9-6).
- ANSYS — ANSYS is a computer program for structure analysis such as dynamic response analysis (Reference 3.9-7).
- RELAP-5 — RELAP-5 is a computer program for analyzing thermal-hydraulic transient analysis within primary coolant system and secondary system (Reference 3.9-8).
- GOTHIC — GOTHIC code is a computer program for thermal-hydraulic analysis within a containment building and subcompartments (Reference 3.9-65).
- MULTIFLEX — MULTIFLEX code is a computer program for analyzing thermal-hydraulic-structural system dynamics within a primary coolant system (Reference 3.9.-9).
- NASTRAN — NASTRAN is a computer program for structure analysis such as dynamic analysis (Reference 3.9-10).
- EVALPRI — EVALPRI is a computer code for evaluating the primary stress of a general axi-symmetric or three-dimensional solid model or tube sheet and channel head junction for structural strength due to design and seismic load.
- EVALSEFAV — EVALSEFAV is a computer program for evaluating the primary plus secondary stress and fatigue in accordance with ASME Code Section III NB-3220 and NG-3220.
- EVALIRAMJ — EVALIRAMJ is a computer program for evaluating environmental fatigue based on NUREG/CR-6909.
- RATCHET — RATCHET is a computer program for evaluating thermal stress ratcheting.
- RIGHT — RIGHT is a computer program used to create the internal heating files of 3D solid Models.
- SABRINA — SABRINA is a computer program used to perform the stress evaluation for the threaded structural fasteners (TSFs) of the Core Support Structures (CSS).

3.9.1.2.2 Program Validations

The verification and validation of computer programs is performed in compliance with the established quality assurance program (QAP). Error reporting and resolution of the errors are tracked following a QAP. The QAP is described in Chapter 17. The computer programs are validated using one of the methods described below. Verification tests demonstrate the capability of a computer program to produce valid results for the test

problems encompassing the range of permitted usages defined by the program documentation.

- Hand calculations
- Known solution for similar or standard problem
- Acceptable experimental test results
- Published analytical results
- Results from other similar verified programs

3.9.1.3 Experimental Stress Analysis

Experimental stress analysis is not used for the US-APWR.

3.9.1.4 Considerations for the Evaluation for the Faulted Condition

Analytical methods used to evaluate faulted condition (Level D loading) for ASME Code, Section III (Reference 3.9-1), Class 1, 2, and 3 components are described in Subsection 3.9.3.

3.9.2 Dynamic Testing and Analysis of Systems, Components, and Equipment

3.9.2.1 Piping Vibration, Thermal Expansion, and Dynamic Effects

The testing of piping vibration, thermal expansion, and dynamic effects occurs during two phases which make up the initial test program (ITP) as discussed in Subsection 14.2.1.2: pre-operational testing and hot functional (startup) testing. The ITP is implemented to verify that the piping and piping restraints for all ASME Code, Section III (Reference 3.9-1) Class 1, 2, and 3 piping systems, other high-energy piping systems inside seismic category I structures, high energy portions of systems whose failure could reduce the functioning of any seismic category I plant feature to an unacceptable safety level, and seismic category I portions of moderate-energy piping systems located outside containment will remain within acceptable limits when subjected to piping vibrations and dynamic transients such as those caused by in-line component trips. Other SSCs for which preoperational and startup testing is performed are identified in Subsection 14.2.1. When applicable, instrumentation lines are included up to the first support in each of three orthogonal directions from the process pipe or equipment connection point.

Construction testing involves checking the as-built piping systems, supports, and associated components for correct installation. The piping, pipe supports, and equipment supports are checked for proper assembly and design settings. The cold settings and cold gaps are recorded for the major system pipe supports, whip restraints, equipment, and equipment supports. The major piping systems checked are the reactor coolant, the RHR, the main steam, and the feedwater systems.

The purpose of the pre-operational test program is to assure ASME Code, Section III (Reference 3.9-1), Class 1, 2, and 3, and other high-energy or seismic category I piping

systems meet functional design requirements and that piping vibrations are within acceptable levels.

Thermal monitoring of the systems is also performed as required during pre-operational testing to assure that thermal predicted movements meet the required design considerations within appropriate support and whip restraint gaps. Excessive thermal deflections are noted and checked against as-analyzed piping results.

A check of snubber operability is made by recording hot and cold positions and comparing these positions to calculated hot and cold positions. The list of snubbers on systems, which experience sufficient thermal movement to measure snubber travel from cold to hot position, will be provided as part of the ITP plan. In addition, the ITP plan will include the procedure necessary to verify snubber operability when no snubber piston movement is noted.

During the hot functional (startup) testing, the piping systems which are specified as part of the ITP are operated to check the performance characteristics of critical pumps, valves, controls, and auxiliary equipment. The flow modes of operation and transients that are performed during the test include pump trips and valve closures. In the case of the RCS heatup tests, transients that are applied to the system include the RCP start, RCP trip, the operation of pressure-relieving valves, and closure of a turbine stop valve. Additional requirements of startup testing are outlined in Subsection 14.2.1.2.3.

3.9.2.1.1 System Vibration and System Dynamic Effects Tests

Transient-induced vibrations and steady-state vibrations are possible within operational conditions. Transient-induced vibrations are a dynamic response to a transient, time-dependent forcing function such as fast valve closure. Steady-state vibrations are a constant presence, usually flow-induced.

The general requirements for vibration and dynamic effects testing of piping systems are specified in “Initial Test Programs for Water-Cooled Nuclear Power Plants”, RG 1.68 (Reference 3.9-12). More specific vibration testing requirements are defined in “Requirements for Preoperational and Initial Startup Vibration Testing of Nuclear Power Plant Piping Systems”, ASME OM (Reference 3.9-13). Detailed test specifications written in accordance with applicable portions of RG 1.68 and ASME OM are included in the test program description, and address such issues as prerequisites, test conditions, precautions, measurement techniques, monitoring requirements, test hold points, and acceptance criteria. If vibration is noted beyond the acceptable levels, corrective restraints are to be designed, incorporated in the piping system analysis, and installed. The ITP plan will identify which measurement technique (e.g., visual observation, remote monitoring, or local measurements) is to be used for each of the piping systems covered by the vibration and dynamic effects testing program, the methods used to anticipate piping movements and deflections, and any computer codes used in the analysis including whether the computer codes have been reviewed and approved by the NRC. The ITP plan will include a list of locations in the specific piping systems that are selected for visual inspection and other measurements during the vibration, thermal expansion, and dynamic effects testing program. In addition, acceptance criteria for the deflection, pressure, and/or other appropriate criteria to be obtained during the tests will be included in the ITP plan to determine if the stress and fatigue limits are within design levels.

These tests are used to validate that the piping, components, restraints, and supports of specified high-energy and moderate-energy systems have been designed to withstand the dynamic effects of transient and steady-state flow-induced vibration and anticipated operational transient conditions.

Transient-Induced Vibrations

System operational transient events considered as causing transient-induced vibrations are AOOs. The specific systems and the associated transients considered in the preoperational test program are outlined in Section 14.2.

Time-dependent dynamic analyses are performed on the system by combining transient-induced stresses with other operating stresses in accordance with the criteria identified in Subsection 3.9.3 and Section 3.12.

Test procedures include details including the criteria for the evaluation of data output from the pipe movement monitors, such as displacement transducers or scratch plates, and strain gage or load cell locations.

Steady-State Vibration

Continuous vibration that generally develops as a result of flow disturbances in a system is considered steady state vibration. Since steady-state vibration are generally unpredictable, vibrations resulting during initial operation are measured for maximum amplitudes and stress intensity levels based on the guidance of ASME OM (Reference 3.9-13). The maximum alternating stress intensity S_{alt}, calculated from the measured amplitudes, is limited in accordance with the following formulas.

3.9.2.1.1.1 ASME Class Piping Systems

In accordance with ASME Code, Section III (Reference 3.9-1), alternating stress levels are acceptable as follows:

$$S_{alt} = \frac{C_2 K_2}{Z} M \leq \frac{S_{el}}{\propto}$$

where

C_2 = secondary stress index as defined in the ASME Code, Section III

K_2 = local stress index as defined in the ASME Code, Section III

Z = section modulus of the pipe

M = maximum zero to peak dynamic moment loading due to vibration only, or in combination with other loads as required by the system design specification

S_{el} = 0.8 S_A, where S_A is the alternating stress at 10^6 cycles from Figure I-9.1; or S_A at 10^{11} cycles from Figure I-9.2.2 of the ASME Code, Section III. The influence of temperature on the modulus of elasticity is considered.

$\propto$ = allowable stress reduction factor: 1.3 for materials covered by Figure I-9.1; or 1.0 for materials covered by Figure I-9.2.1 or I-9.2.2 of the ASME Code, Section III, Appendices

3.9.2.1.1.2 ASME Class 2 and 3 or ANSI B31.1 Piping

For ASME Class 2 and 3 or ANSI B31.1 piping (Reference 3.9-14):

$$S_{alt} = \frac{C_2 K_2}{Z} M \leq \frac{S_{el}}{\propto}$$

where

C_2K_2 = $2i$

i = stress intensification factor, as defined in Subsection NC-3600 and ND-3600 of the ASME Code (Reference 3.9-1) or in ANSI B31.1 (Reference 3.9-14).

The results of the vibration-induced stresses will determine if support or system modifications are necessary. Based on the level of vibration, the design specification may be modified using the measured vibration as input to assure conformance to applicable codes. If modifications are performed, then the system is retested until acceptable results are achieved.

3.9.2.1.2 System Thermal Expansion Program

The system thermal expansion testing program verifies that the piping expands within acceptable limits during heatup and cooldown. In addition, a review of manufactured standard supports, such as spring hangers, snubbers and struts, is completed to verify thermal expansion is accommodated within acceptable limits during various operational modes. System thermal expansion tests are developed in accordance with the guidance of ASME OM (Reference 3.9-13), Part 7. If piping system restraints are determined during the test to be inadequate or are damaged, corrective restraints are to be installed and another test performed to determine whether the thermal motion has been reduced to an acceptable level. The detailed description of the thermal motion monitoring program will be included as part of the ITP plan. The thermal motion monitoring program will include verification of snubber movement, adequate clearances and gaps, the acceptance criteria, and how the motion is to be measured.

3.9.2.2 Seismic Analysis and Qualification of Seismic Category I Mechanical Equipment

3.9.2.2.1 Seismic Qualification Testing

Seismic category I mechanical equipment and supports are designed to safely withstand the effects of postulated earthquakes combined with appropriate effects of normal and accident conditions without loss of intended safety-related function. Seismic qualification is performed by either analysis, testing or by a combination of both testing and analysis. The methods for seismic qualification of safety-related mechanical equipment by testing is performed in accordance with the recommendations of “IEEE Recommended Practice for Seismic Qualification of Class 1E Equipment for Nuclear Power Generating Stations”, ANSI/IEEE Std 344-2004 (Reference 3.9-34), as endorsed by NRC, RG 1.100, Rev.3, “Seismic Qualification of Electric and Mechanical Equipment for Nuclear Power Plants” (Reference 3.9-16). The seismic qualification testing methods for safety-related mechanical equipment are described in Subsection 3.10.2.

3.9.2.2.2 Seismic System Analysis Methods

The seismic system and subsystem analysis methods (including response spectrum analysis, time history analysis, and equivalent static load analysis) are discussed in Subsections 3.7.2 and 3.7.3. The method of analysis for piping and supports is described in Section 3.12. Seismic analysis methods for mechanical equipment and supports use the guidelines in IEEE Std 344-2004 (Reference 3.9-34) and Subsections 3.10.2 and 3.10.3. The majority of mechanical equipment is supplied by vendors that are required to provide a seismic qualification report that meets the design specification provided in the purchase order.

The stiffness of the seismic subsystem anchorage must be determined and the assumptions made in the seismic analysis must be verified as accurately reflecting the mounting condition.

Two separate models are used for the RCL seismic analysis. One for RCL seismic analysis, which consists of the use of stick mass spring model of SG, RCP, Reactor Pressure Vessel, loop piping and buildings. The other is used for seismic analysis of internal components of the SG. RCL seismic analysis is described in Appendix 3C. The SG seismic analysis is performed considering internal components.

3.9.2.2.3 Determination of Number of Earthquake Cycles

The OBE is chosen as 1/3 of the SSE for the US-APWR (see Subsection 3.7.1.1). When the OBE is defined as less than or equal to 1/3 SSE, explicit design or analysis is not required for the OBE.

With the elimination of OBE, to account for fatigue in analysis and testing, the guidance for determination of the number of earthquake cycles described in “Policy, Technical, and Licensing Issues Pertaining to Evolutionary and Advanced Light-Water Reactor (ALWR) Designs”, NRC Staff Requirements Memorandum (SRM) SECY-93-087 (Reference 3.9-17) is used. The number of earthquake cycles is discussed in Subsection 3.7.1.1 and

Subsection 3.10.2. For piping analysis, the guidance in SECY-93-087 is used and the number of earthquake cycles to consider is defined in Section 3.12, Table 3.12-2, Note 3.

3.9.2.2.4 Basis for Selection of Frequencies

To avoid resonance, the fundamental frequencies of components and equipment should be preferably less than one half or more than twice the dominant frequencies of the forcing frequencies of the support structure. When the equipment frequencies are within this range, the equipment must be designed for the applicable loads.

3.9.2.2.5 Three Components of Earthquake Motion

The combination of three components of earthquake motion is dependent on the method used in the seismic analysis and is in accordance with “Combining Modal Responses and Spatial Components in Seismic Response Analysis”, RG 1.92, Rev. 2 (Reference 3.9-18) as discussed in Subsection 3.7.3.4.

For piping analysis, the three sets of mutually orthogonal components of earthquake motion are combined by the SRSS method per RG 1.92, Rev. 1 (Reference 3.9-19), as discussed in Subsection 3.12.3.2.

3.9.2.2.6 Combination of Modal Responses

Combination of modal responses is applicable when the response spectrum method of analysis is used, because the phase relationship between various modes is lost and only the maximum responses for each mode are determined. Modal responses are combined by the methods described in Subsection 3.7.3.5.

For piping analysis, the guidance on combining the individual modal results in RG 1.92, Rev. 1 (Reference 3.9-19) is used as discussed in Subsection 3.12.3.2.

3.9.2.2.7 Analytical Procedures for Piping

For seismic category I piping and seismic category II piping, the seismic analysis methods are provided in Subsection 3.12.3.

3.9.2.2.8 Multiple-Supported Equipment Components with Distinct Inputs

For equipment and components supported at several points by either a single structure at different elevations, or by two separate structures, the methods used to account for the different input motions are described in Subsection 3.7.3.1.

Generally, equipment supported at two or more locations with distinct seismic input uses upper bound of envelop of all the individual response spectra for these locations The analysis of seismic anchor motions (i.e., maximum relative support displacement), is performed as a static analysis with all dynamic supports active and the results of this analysis are combined with the piping system seismic inertia analysis results by absolute summation. For select equipment (e.g., RCS components), the time history approach using a coupled model with supported structures is applied.

For piping systems that are supported by multiple support structures or at multiple levels within a structure, the method used is described in Subsection 3.12.3.3.

3.9.2.2.9 Use of Constant Vertical Static Factors

The constant vertical static factors method is not used to determine the vertical response loads in seismic analysis for the US-APWR. The vertical component used in seismic analysis is determined as described in Subsection 3.7.3.6.

3.9.2.2.10 Torsional Effects of Eccentric Masses

Most of the US-APWR equipment is designed such that torsional effects of eccentric mass do not occur. For some components (e.g., RCS components), the torsional effects are considered in the modeling and the analysis methods.

The methods used to account for the torsional effects of valves and other eccentric masses (for example, valve operators) in the seismic subsystem analyses are as follows:

- When valves and other eccentric masses are considered rigid, the mass of the operator and valve body or other eccentric mass are located at the center of gravity. The eccentric components (that is, yoke, valve body) are modeled as rigid members.
- When valves and other eccentric masses are not considered rigid, the dynamic models are simulated by lumped masses in discrete locations (that is, center of gravity of valve body and valve operator), coupled by elastic members with properties of the eccentric components.

Torsional effects of eccentric masses affecting the piping design are included in the analysis described in Subsection 3.12.4.2.

3.9.2.2.11 Buried Seismic Category I Piping, Conduits, and Tunnels

Buried seismic category I piping, conduits, and tunnels are not present in the US-APWR standard plant design. Site Specific design including structural design of the pipe tunnel and conduits is further discussed in Subsection 3.7.2.8 and Subsection 3.7.3.7.

3.9.2.2.12 Interaction of Other Piping with Seismic Category I Piping

Interaction of other piping with seismic category I piping is addressed in Subsection 3.12.3.7.

3.9.2.2.13 Analysis Procedure for Damping

The damping values used for seismic analysis are consistent with RG 1.61, Rev. 1 (Reference 3.9-20). The analysis procedure for damping is described in Subsection 3.7.3.3.

The damping values used in the seismic analysis of piping systems are addressed in Subsection 3.12.5.4.

3.9.2.2.14 Test and Analysis Results

The tests and analysis results demonstrating adequate seismic qualification will be documented and available for review. Implementation program that includes milestones and completion dates is further discussed in Section 3.10.

3.9.2.3 Dynamic Response Analysis of Reactor Internals under Operational Flow Transients and Steady-State Conditions

During normal operations, reactor internals experience vibrations caused by pressure fluctuations acting on their surfaces. The main source of these excitation forces is from coolant flow, such as flow turbulence and vortex shedding. The third source is RCP-generated acoustic pressure pulsation. In general, responses to RCP-generated pressure pulsation is small but will be addressed.

In accordance with RG 1.20 (Reference 3.9-21), a comprehensive vibration analysis program is set up for the US-APWR to assure that the vibration responses of the reactor internals during normal operations are acceptable before the pre-operational, hot function test. This analysis is a part of the overall comprehensive vibration assessment program. Detail of the analysis is described in Reference 3.9-22. The evaluation of the SG is described in Subsection 5.4.2.1.

The design of the US-APWR steam delivery system (including the safety relief valves and the steam separator) and the flow conditions they experience are similar to the existing and currently operating steam delivery systems in the United States and around the world. The US-APWR steam delivery system is designed using the structural design rules based on years of empirical experience with similar equipment. The configuration employed in the US-APWR steam delivery system has been operating in the USA for more than 20 years with sizes and flow rates that bound those of the US-APWR steam delivery system. Based on an extensive record of vibration-free operation, the structural and vibration design bases are proven. This non-safety related steam delivery system will not experience excessive vibration; therefore, the analysis of the flow excited acoustic resonance occurring in the standpipes of the safety relief valves (or in any other blind standpipes) is not expected.

3.9.2.3.1 Classification of Reactor Internals in Accordance with the Comprehensive Vibration Assessment Program

The US-APWR reactor internals components are evolved from that of the well-proven current 4-loop plant design operating in United States and Japan. The differences are as follows:

- Design: the US-APWR uses neutron reflector instead of baffles
- Size: there are increases in the diameters of RV, core barrel and the secondary core support assembly
- Arrangement: RCCA guide tubes and upper support columns in the upper plenum
- Operating conditions: there is an increase in flow rate

The US-APWR reactor internals represent a unique, first of a kind design because of its design, size, arrangements and operating conditions. Therefore, the first US-APWR will be classified as a Prototype in accordance with RG 1.20 (Reference 3.9-21). Upon qualification of the first US-APWR as a valid prototype, subsequent plants will be classified as Non-Prototype Category I.

3.9.2.3.2 Comparative Analysis of the US-APWR and the Current Plant

In this section, flow-induced vibration characteristics of the US-APWR reactor internals are assessed in comparison to those of the current 4-loop plant. Subsection 3.9.5 provides general information on the reactor internals.

- **General**

  The basic design of the US-APWR reactor internals follows that of the current 4-loop plant but features a larger core barrel diameter and a neutron reflector instead of a baffle structure. However, the coolant flow velocities are carefully designed to remain the same as those in the current 4-loop plant so that any increase in the excitation force due to a larger surface area exposed to the coolant flow will be compensated for by an increase in the bending stiffness of the core barrel.

  The diameter of the core barrel for the US-APWR is about 20% larger than that of the current 4-loop plant. This increase is necessary to accommodate an increase in the numbers of fuel assemblies from 193 to 257 and the additional space for the neutron reflector.

  A new component, the neutron reflector constructed of perforated metal ring blocks, surrounds the core cavity instead of the baffle structures in the current 4-loop plant.

  The core barrel stiffness is designed to maintain the vibration characteristics of the current 4-loop plant, taking into consideration the included mass of the neutron reflector and the fuel assemblies. The bending stiffness of the core barrel is approximately twice of that in the current 4-loop plant. The vibration responses of the core barrel in the US-APWR are estimated to be no larger than the corresponding values in the current 4-loop plant.

- **Lower Reactor Internals Assembly**

  The lower reactor internals assembly consists of the core barrel assembly, the neutron reflector assembly and the secondary core support assembly.

  <u>Core Barrel Assembly</u>

  The design of the core barrel assembly, with a lower core support plate, is based on the current 4-loop plant with a 14-ft core. In the US-APWR, the axial length of the core barrel is maintained. The core barrel diameter is increased by about 20% from that of the current 4-loop plant. As a result, the projected area of the core barrel is also 20% larger. Because the coolant flow velocities are equivalent to

those in the current 4-loop plant, the increase in the flow excitation force on the core barrel is also 20%.

The core barrel wall thickness is designed to maintain the beam mode natural frequency of the lower internal assembly to be no lower than that of the current 4-loop plant, even with a larger core and the neutron reflector. The resulting core barrel bending stiffness is about twice of that in the current 4-loop plant.

The flow-induced beam mode vibration amplitude of the core barrel, estimated from the ratio of the excitation force to the bending stiffness (1.2 / 2), is about 60% that of the current 4-loop plant. Flow-induced shell mode vibrations are evaluated quantitatively with FE analysis technique. This is discussed in the following subsection.

Thus, the flow-induced vibration levels of US-APWR lower internals are acceptably low because the integrity of the current 4-loop plant has been confirmed and by many years of operational experiences.

Neutron Reflector Assembly

The neutron reflector, which is used in the US-APWR instead of the baffle structure in the current 4-loop plant, is constructed of perforated metal ring blocks. Analysis described in the next subsection shows that the flow-induced beam mode vibration of the neutron reflector is no larger than that of the core barrel beam mode and the resulting alternating stresses from both the beam and the shell modes are much lower than the limit for high cycle fatigue.

Secondary Core Support Assembly

The secondary core support assembly consists of secondary core support columns, diffuser plates, diffuser plate support columns, a base plate, and an energy absorber system. The diffuser plates are bolted to the diffuser plate support columns and those columns are fastened to the bottom of the lower core support plate. These constructions are similar to the tie plates and bottom mounted instrumentation columns used in the current 4-loop plant.

The main source of flow-induced vibration for the secondary core support assembly is the cross-flow to the diffuser plate support columns. The flow velocity profile in the lower plenum of the current 4-loop plants is maintained in the US-APWR because the geometry of the RV lower plenum is maintained. The fundamental modal frequency of the assemblies is slightly lower but the diameter of support column is much larger. As a result, the reduced velocity (U/f_nD, where U is the cross-flow velocity, f_n is the fundamental modal frequency and D is the diameter of the support column), which is a key dimensionless parameter for assessing flow-induced vibration, is 30% lower than that in the current 4-loop plant. Sufficient margins of safety for cross-flow induced vibrations, such as fluid elastic instability and turbulence-induced vibration, are maintained. In addition, since U/f_nD is less than 3.3 and the reduced damping parameter is higher than 1.2, lock-in vortex-induced vibration of the support columns is avoided per ASME Code, Section III, (Reference 3.9-1) Appendix N-1324.

- **Upper Reactor Internals Assembly**

  The design of the US-APWR upper reactor internals assembly is based on the "Inverted top hat upper internals" configuration in the current 4-loop plant. The main flow-induced vibration mechanism is cross-flow induced vibration of tube structures, such as the RCCA guide tubes and the upper support columns. The diameter of the upper plenum is increased by about 20% from that in the current 4-loop plant but the height of upper plenum is maintained. The cross-flow area near the outlet is therefore increased by 20% from that of the current 4-loop plant. As a result, the rated cross-flow velocity in the upper plenum is about 10% higher than that in the current 4-loop plant because the flow rate is increased by about 30%.

  The fundamental modal frequencies of the upper support column and the lower RCCA guide tube are the same as those in the current 4-loop plant because the basic dimensions of these structures are not changed. The top slotted column, located at the peripheral part of upper plenum, is another support column with larger diameter and higher fundamental mode frequency. The reduced velocity U/f_nD for the upper plenum structures is slightly higher than that of the current 4-loop plant, but sufficient margins of safety are maintained for cross-flow induced vibrations, such as fluid elastic instability and turbulence-induced vibration. In addition, since the vortex shedding frequencies are lower than 70% of the structural fundamental frequencies, lock-in vortex-induced vibration are avoided per ASME Code, Section III (Reference 3.9-1) Appendix N-1324. "Comprehensive Vibration Assessment Program for US-APWR Reactor Internals" (Reference 3.9-22) provides further details.

3.9.2.3.3 Quantitative FIV Analysis of the US-APWR

Turbulent fluctuating pressure has been identified as the main source of excitation of reactor internals during normal operation. The methodology proposed by Au Yang and Connelly, "A Computerized Method for Flow-Induced Random Vibration Analysis of Nuclear Reactor Internals" (Reference 3.9-23), is used to assess the responses of the core support barrel to the turbulence flow in the down-comer with some simplifications (more detail can be found in Subsection 3.3.1(1) of Reference 3.9-22). The methodology for cross-flow induced vibration analysis of tube structures in the lower and upper plenums is based on the ASME Code, Section III (Reference 3.9-1), Appendix N, "N-1300 Flow-Induced Vibrations of Tubes and Tube Banks." The detail of the evaluation including the determination of the cross flow velocity is discussed in Subsection 3.2.3 of Reference 3.9-22.

Acoustic pressure fluctuations generated by the RCP are assumed to be similar to those generated by RCP used in the current plant, because the key parameters governing RCP-induced pressure pulsations, such as the pump rotational speed and the number of impellers are the same. The effect of increasing the capacity of the RCP from the current 4 loop was encountered on the evaluation of the US-APWR RCP pulsation loads. The details about the characteristics of US-APWR RCP pulsation loads are described in Subsection 3.3.4(1) of Reference 3.9-22. Forcing functions due to RCP are determined taking into consideration acoustic resonance modes in the reactor vessel. Detailed

information, about the acoustic resonance analysis including the discussions about the code verification and assumption of the acoustic damping are included in Subsection 3.3.4 of Reference 3.9-22.

FE analysis with computer code ANSYS (Reference 3.9-7) is used to calculate the flow-induced vibration amplitudes of the reactor vessel and internals. The methodology of structural modeling and forcing function assessment have been confirmed by a simulation analysis of the APWR 1/5 scale model flow test (Reference 3.9-24) in the same manner. The computed vibration response of the core barrel with the best estimate damping coefficient agrees with measured results. Detail of the model validation including the bias error and uncertainties is discussed in Subsection 3.2.1 of Reference 3.9-22. Discussion about dimensionless parameters and the ratio of forcing functions in the scale model test and those related to the plant operating condition are included in Appendix A of Reference 3.9-22.

For the prediction analysis of US-APWR reactor internals vibration responses, the damping coefficient smaller than the best estimate value is used to assure a conservative evaluation.

Refer to the “Comprehensive Vibration Assessment Program for US-APWR Reactor Internals” (Reference 3.9-22) for further details.

From the analysis results, the following conclusions are obtained.

- Alternating stress levels of reactor internals due to flow-induced vibrations are acceptably low in comparison with the limit for high cycle fatigue.
- The difference in reactor internals vibration characteristics, such as the natural frequency of the core barrel, is very small with or without the core. The vibration responses without the core are also the same or slightly larger than those with the core. This is because the flow rate increases with the elimination of fuel assemblies and the subsequent pressure loss. Thus, in the preoperational test of the prototype plant, the results of vibration measurements after core loading are bounded by the measurements before core loading, and only measurements before core loading are necessary.

3.9.2.4 Preoperational Flow-Induced Vibration Testing of Reactor Internals

3.9.2.4.1 Background

The first operational US-APWR reactor internals are classified as Prototype in accordance with RG 1.20 (Reference 3.9-21). Upon qualification of the first US-APWR as a Valid Prototype, subsequent plants will be classified as Non-Prototype category I based on the designation of RG 1.20. The first COL Applicant is to complete the vibration assessment program, including the vibration test results, consistent with guidance of RG 1.20. Subsequent COL Applicant need only provide information in accordance with the applicable portion of position C.3 of RG 1.20 for Non-Prototype internals.

Following the recommendation of Regulatory Guide 1.20 (Reference 3.9-21), a pre-operational vibration measurement program is developed for the first operational US-

APWR reactor internals. Data will be acquired only during the hot functional test, before core loading. Analysis (Subsection 3.9.2.3) shows that the responses under normal operating condition with fuel assemblies in the core are almost the same or slightly smaller than those under hot functional test conditions without the core. Detailed information, including discussions about other effects with or without the core, is described in Subsection 3.4.3 of Reference 3.9-22.

Subsequent to the completion of the vibration assessment program for the first US-APWR reactor internals, the vibration analysis program will be used to qualify subsequent US-APWR under the criteria for non-prototype category I.

The needs for flow-induced vibration, measurement testing, of steam generator internals is discussed in Subsection 5.4.2.1.2.10.

3.9.2.4.2 Measurement Program

Measurements will be performed during the pre-operational test to confirm the vibration characteristics and structural integrity of the Prototype US-APWR reactor internals.

The acquired data will be used to confirm that unexpected, abnormal vibrations do not occur, and that the vibration responses are sufficiently small compared to an acceptance criterion based on the design fatigue curves in the ASME Code, Section III.

Instrumentation consisting of strain gages, accelerometers, pressure transducers and displacement transducers will be installed on selected components. Accelerometers and displacement transducers will be used to measure the responses of the reactor internals. Strain gages will be used to directly measure the strains at key connecting points, and dynamic pressure transducers will be used to measure the pressure fluctuations at selected locations. Some of the specific measurement locations are described below.

- Core barrel: Strains in the core barrel flange will be measured with strain gages. Shell-mode responses will be measured with accelerometers mounted on the wall of the core barrel.
- Lower core support plate: An accelerometer mounted near the center of the lower core support plate will be used to measure the vertical response of this component.
- Neutron reflector: Shell mode responses and vertical motions will be measured by accelerometers. Relative displacement between the core barrel and the neutron reflector will be measured by displacement sensors. The vibration responses of the tie rod will be measured by strain gages.
- Secondary core support assembly: Vibration responses will be measured by strain gages mounted on the diffuser plate support columns.
- RCCA guide tubes and upper support columns: Beam mode responses due to the cross-flow in the upper plenum will be measured by strain gages and accelerometers.

- Upper core support: The vertical response will be measured by an accelerometer mounted near the center of the upper core support plate. Horizontal responses will be measured by strain gages installed on the upper core support skirt.

Details for the data acquisition and reduction system, including redundancy, are described in Subsection 4.1 of Reference 3.9-22.

3.9.2.4.3 Inspection Program

The internal components of all US-APWR plants will be inspected before and after the hot functional test. The reactor internals will not be considered adequate and pass the comprehensive vibration assessment program unless no structural damage or change is observed.

3.9.2.4.4 Acceptance Criteria

The acceptance criteria of the pre-operational flow-induced vibration testing for reactor internals are as follows.

- Vibration measurement

  The measured rms vibration amplitudes will be multiplied by 4.5 to convert them into 0-peak values. The corresponding 0-peak stresses in key connecting components will be calculated from the measured vibration amplitudes or strains. These stresses must show sufficient safety margins based on the design fatigue curves in the ASME Code, Section III, Appendix-I.

- Inspection

  No structural damage or change is observed in the post-hot functional test inspection.

3.9.2.5 Dynamic System Analysis of the Reactor Internals under Faulted Conditions

NUREG-0800, SRP 3.9.2, Rev. 3 (Reference 3.9-25), requires that the DCD provide a detailed discussion of the reactor internals, design criteria and dynamic analyses methodology for the combined seismic and postulated pipe rupture events under ASME Level D (faulted) service conditions. The results of the analyses are required to meet the stress limits of the ASME Code, Section III, Subsection NG (Reference 3.9-1) for core support structures, and the functional requirements of the reactor internals design specification. Meeting the requirements of the ASME Code, Section III (Reference 3.9-1) and the design specification provides assurance of the structural and functional integrity of the reactor internals under ASME Level D service conditions, combined loads of seismic and pipe rupture events.

Both seismic and LOCA dynamic analysis models are three dimensional, non-linear FE mathematical models representing the reactor vessel and its internals in six degree of freedoms. The general purpose FE computer code, ANSYS (Reference 3.9-7) is used as the basis for the modeling.

The nodal point degrees of freedom, and damping coefficients of the reactor internals and surrounding structures are selected such that most dominant frequencies are represented in the seismic-LOCA response. This forms the bases for establishing any directional decoupling and system structural partitioning in the seismic-LOCA system models. Detailed discussion of the seismic and LOCA system models are described in Reference 3.9-58.

3.9.2.5.1 Seismic Analysis Methodology and Acceptance Criteria

The seismic analysis methodology is based on two separate mathematical models and uses general purpose FE computer code. The first model is a three-dimensional non-linear dynamic FE computer model representing the reactor internals and the support system and is used to determine the maximum accelerations, displacements, and loadings that are used as inputs to the second model. The second computer model or models are three-dimensional static FE computer programs that are used to determine the maximum seismic stress intensities and displacements. These models and description are described in Reference 3.9-58.

The maximum stresses from the static FE model for both SSE and LOCA events are combined by the SRSS method and the results are compared to the service limit stress intensities in the ASME Code, Section III, Subsection NG (Reference 3.9-1). The maximum displacements and loads are compared to the allowable limits in the design specification. The details of the seismic dynamic computer model are discussed below.

The pre-processing input of the seismic mathematical computer model comes from the design drawings and is the bases of the geometrical and material representation and connectivity of the reactor internals components and interfacing components. The model includes representation of the RV support system, inlet and outlet piping nozzles, control rod drive mechanism (CRDM) system, integrated head support system, in-core instrumentation support system, and fuel assembly nozzles and grids.

Figures 3.9-1 and 3.9-2 show a typical mathematical model of the reactor internals used for seismic analysis. The physical geometry and material properties (density, modulus of elasticity, Poisson's ratio) of the reactor internals are represented by beam elements. The reactor internals and interfacing structures are connected or represented by mass inertia effects, stiffness matrices, and hydro-dynamic matrices, springs, and/or impact elements including gap and damping (including coexistence of viscous and Coulomb damping).

The nodal point degrees of freedom, and damping coefficients of the reactor internals and surrounding structures are selected such that the most dominant frequencies are represented in the seismic response. Dominant frequencies are identified by comparing the frequency response of the reactor internals with the expected responses based on experience and measurements.

Fluid-structure interaction effects are accounted for by matrices developed for that purpose. The hydrodynamic masses are calculated for the following locations in the seismic analysis model:

1. Between the reactor vessel and core barrel in two horizontal directions

2. Between the core barrel and neutron reflector in two horizontal directions

3. Between the upper core support and reactor vessel head in vertical direction

In the LOCA dynamic analysis, the hydrodynamic mass matrices between the reactor vessel and core barrel were deleted because the hydrodynamics mass effect were included in the pressure force as the output of blow-down analysis code, MULTIFLEX.

The effects of flow upon both the lumped mass and flexibility properties in the LOCA dynamic system model were also accounted because they were included in the MULTIFLEX results which were used as input to the LOCA dynamic system model.

The reactor internals seismic input can either be from ISRS or in-structure time-history accelerations, which is obtained from the analysis results described in Subsection 3.7.2. This model employs the design response spectra of the RCL model based on modified input from RG 1.60, Rev. 1 (Reference 3.9-26) as described in Subsection 3.7.2.2. This model is used in determining the effect of vibratory motion for SSE and 1/3 SSE seismic conditions.

Additional loading input to the seismic analysis are vertical pressure loadings converted to nodal point external loads, and the vertical weights of the reactor internals and interfacing components, as inputs of density on the beams with spring effects or mass nodal points.

The reactor internals static computer models are used to determine the reactor internals component stresses and displacements. The structural design adequacy of the reactor internals are verified to be capable of withstanding the dynamic loadings of the most severe SSE in combination with the LOCA events.

3.9.2.5.2 Pipe Rupture Analysis Methodology and Acceptance Criteria

The pipe rupture design basis methodology is similar to the seismic methodology, wherein, a dynamic computer model is used to determine the maximum accelerations, displacements, and loadings, and the reactor internals static computer models are used to determine the reactor internals component stresses and displacements. However, instead of a response spectra or time-history for the seismic inputs, a time-history computer code is used to determine the pipe rupture loads-time history on the dynamic computer model nodes and elements. The details of the pipe rupture dynamic model and pressure input loads are discussed below.

The LOCA dynamic computer model is a three-dimensional FE model that defines the geometry, material properties, and nodal point connections and elements.

The mathematical model for LOCA dynamic effects includes reactor internals and dynamically-related piping stiffness, RV supports, interfacing components, and fluid-structure interaction effects.

The mathematical models in Figures 3.9-1 and Figure 3.9-2 are used for the LOCA dynamic system analysis, which include such structural characteristics as flexibility, mass inertia effects, geometric configuration, spring, and impact elements including gap and damping (including coexistence of viscous and Coulomb damping). The effects of flow

upon the mass and flexibility properties of the system are accounted for in the model. These models are described in References 3.9-22 and 3.9-58.

The design input for the pipe rupture event is defined by the postulated LBB pipe rupture as discussed in Subsection 3.6.2. A time-history forcing function on the reactor internals comes from pipe rupture that are enveloped by the most limiting blow-down hydraulic loads.

The MULTIFLEX computer code is used for the blowdown analysis in the hydraulic load evaluation of the postulated LOCA accident. MULTIFLEX is a computer program which calculates the transient of pressure, flow rate and density during the initial phase of the blowdown in a complex system, such as the primary coolant system of a pressurized water reactor (PWR). The MULTIFLEX code includes mechanical structure models and their interactions with thermal-hydraulic systems (Reference 3.9-9).

The general characteristics of the MULTIFLEX code are shown as follows:

- A complex system is modeled with one-dimensional hydraulic piping.
- The flow conditions within the system are calculated by solving the one-dimensional equations of mass, momentum and energy conservation using the method of characteristics.
- The MULTIFLEX code includes heat transfer models of the core and the SG, and also simulates various boundary conditions of the PWR system, including the core.
- The calculated results of the MULTIFLEX code (pressure, flow rate, and other parameters) are used in the RV internals load evaluation and the RCL mechanical load evaluation.

The methods and procedures for the LOCA dynamic system analysis is based on the computer code used in the LOCA analysis. The computer code incorporates the governing equations of motion and the computational scheme for deriving results. Asymmetric LOCA loads for the reactor internals are considered for the LOCA dynamic system analysis. More details about the methods of LOCA dynamic system analysis is described in Section 6 of Reference 3.9-58.

The outputs of the LOCA response analysis are time-history accelerations, displacements (absolute and relative), and loadings (forces and moments). The maximum loadings and displacements are input into reactor internals component static FE models and the maximum stress intensities and displacements are compared to the ASME Code, Section III (Reference 3.9-1) and the allowable interface load and displacement limits (see Table 3.9-2). The criteria for acceptance of the LOCA loads and displacements are discussed in Section 3.9.2.5.

The LOCA dynamic system analyses results confirm that the adequacy of the structural design of the reactor internals can withstand the dynamic loadings of the most severe LOCA in combination with the SSE.

3.9.2.5.3 Structural Design Adequacy Criteria for Level D Combined Loadings

The most severe dynamic loadings and displacements of the pipe rupture event are combined with the SSE event and the resulting stresses are compared with the limits of the ASME Level D service limits for acceptability.

The locations to evaluate the stress and fatigue are described in Reference 3.9-58.

In addition to the ASME Code, Section III (Reference 3.9-1) stress criteria, there are functional requirements listed in Table 3.9-2 are to be met as follows:

a. The allowable horizontal load of the guide tube should not impede insertion of the control rod assemblies after the LOCA event.

b. The upper core barrel displacement is not to impede the down comer emergency core cooling flow after the LOCA event.

c. The reaction loads at the RV connections are not to exceed allowable values of the interface load.

d. The maximum vertical displacement of the upper core plate relative to the upper support plate should preclude buckling of the guide tube.

e. The upper core barrel permanent displacement should not prevent loss of function of the control rod assembly by radial inwardly deforming the upper guide tube.

f. The core barrel and upper guide tube are stable during a pipe rupture break.

The structural design and sizing of the US-APWR reactor internals are based upon current 4-loop plants. However, the pipe break sizes of current 4-loop plants were based on the largest LOCA loads that resulted from either a 1.0 ft^2 single-ended cold leg break or a double-ended hot leg break, whereas, LBB is applied to determine the break condition for the US-APWR design input. The magnitude of blowdown hydraulic loads applying LBB is smaller than either of the loads for the large cold leg or hot leg breaks. Consequently, stresses and deflections of reactor internals under faulted conditions meet the ASME Code, Section III (Reference 3.9-1) stress and deflection limits including SSE combined by SRSS.

3.9.2.6 Correlations of Reactor Internals Vibration Tests with the Analytical Results

To confirm the computational methodology for flow-Induced vibration response, including structure modeling and forcing function assessment, a simulation analysis of the APWR $1/5^{th}$ scale model flow test was conducted. The computed vibration response of the core barrel with the best estimate damping coefficient, is equivalent with the measured results.

For the prediction analysis of US-APWR reactor internals vibration responses, a damping coefficient smaller than the best estimate value is used to assure a conservative evaluation.

The measured data from the reactor internals pre-operational vibration tests, described in Subsection 3.9.2.4, will be compared with the predicted and allowable responses that are based on reactor internals acceptance criteria for the expected accelerations, strain measurements, and component frequencies. The details of the acceptance criteria can be found in Chapter 3.5 of Reference 3.9-22. In accordance with RG 1.20 (Reference 3.9-21), any discrepancies between the predicted and measured values will be accounted for and fully explained. If necessary, the input parameters, such as the turbulent forcing function and the damping coefficient, in the vibration analysis will be adjusted in accordance with the measured data and the analysis repeated to resolve the differences between the analytical and measured results.

3.9.3 ASME Code Class 1, 2, and 3 Components, Component Supports, and Core Support Structures

This Subsection discusses the required regulatory compliance in accordance with NUREG-0800, SRP 3.9.3, Rev. 2 (Reference 3.9-27) for maintaining structural and leak tight integrity requirements of safety-related, pressure-retaining components, core support structures, and component supports, which are designed to the criteria of the ASME Code, Section III, Division 1 (Reference 3.9-1). Section 3.12 provides the ASME Class 1, 2, and 3 piping and pipe support design requirements related to seismic category I, II, and non-seismic piping systems. ASME Code, Section III (Reference 3.9-1) Classes 1, 2, 3, seismic category I, II, non-seismic, and related safety classification applications are defined in Section 3.2. The regulatory requirements associated with this subsection include 10 CFR 50, Appendix A (Reference 3.9-28), GDC 1, 2, 4, 14, 15, 10 CFR 50.55a (Reference 3.9-29), 10 CFR 52 (Reference 3.9-30), 10 CFR 52.47(b)(1) (Reference 3.9-31), and 10 CFR 52.80(a) (Reference 3.9-32).

The US-APWR design meets the SRP 3.9.3 (Reference 3.9-27) criteria for ASME (Reference 3.9-1) Class 1, 2, and 3 components and component supports, and CSSs as described in this subsection in the following respects:

- 10 CFR 50.55a (Reference 3.9-29) and 10 CFR 50, Appendix A (Reference 3.9-28), GDC 1 as they relate to structures and components being designed, fabricated, erected, and tested to quality standards commensurate with the safety-related functions to be performed. These requirements are met for the design of safety-related components and structures by meeting the required ASME service level loading conditions, stress margins, stress limits, quality requirements, and test conditions for the operational and accident conditions defined as Design Basis Events during the life of the plant.

- GDC 2 and 10 CFR 50, Appendix S (Reference 3.9-33), as it relates to seismic category I structures and components being designed to withstand the effects of earthquakes without the loss of capability to perform their safety functions. These requirements are met by designing the components and structures to the ASME code using the appropriate combinations of normal and accident conditions and the associated effects of natural phenomena, such as earthquakes.

- GDC 4 as it relates to safety-related structures and components being designed to accommodate the effects of, and to be compatible with, the environmental conditions associated with normal operation, maintenance, testing, and postulated accidents, including LOCAs. The design of safety-related components and structures is in accordance with the ASME Code, Section III (Reference 3.9-1) and the components and structures are shown capable of performing their intended safety function(s) during all normal and accident environmental conditions as specified by GDC 4.

- GDC 14 as it relates to the RCPB being constructed[2] so as to have an extremely low probability of abnormal leakage, of rapid propagating failure, and of gross rupture. The construction of RCPB components to the ASME Code, Section III (Reference 3.9-1) assures compliance with GDC 14.

- GDC 15 as it relates to the RCS and associated auxiliary, control and protection systems being designed with sufficient margin to assure that the design conditions of the RCPB are not exceeded during any condition of normal operation, including AOO. The construction of the RCPB and associated auxiliary system components and structures to the ASME Code, Section III (Reference 3.9-1) requirements assures a sufficient safety margin for normal and accident conditions.

- 10 CFR 52 (Reference 3.9-30) requirements assure that the components and component supports, and core support structures will be constructed in accordance with the certified design. Through requirements of “as-built” reconciliation of the physical plant with the specified requirements of the ASME Code, Section III (Reference 3.9-1), the certified design requirements are assured.

- 10 CFR 52.47(b)(1) (Reference 3.9-31), requires that a design certification application contain the proposed inspections, tests, analyses, and acceptance criteria (ITAAC). The ITAAC are necessary and sufficient to provide reasonable assurance that, if the inspections, tests, and analyses are performed and the acceptance criteria met, a plant that incorporates the design certification is built and will operate in accordance with the design certification, the provisions of the Atomic Energy Act, and the NRC’s regulations; through requirements of “as-built” reconciliation of the physical plant with the specified requirements of the ASME Code, Section III (Reference 3.9-1), including ITAACs, the certified design is assured.

- Proposed inspections, tests, and analyses which satisfy 10 CFR 52.80(a) (Reference 3.9-32) are discussed in Subsection 14.3, including those applicable to emergency planning as discussed in Subsection 13.3 that the licensee is to perform, and the acceptance criteria that are necessary and sufficient to provide reasonable assurance that, if the inspections, tests, and analyses are performed and the acceptance criteria are met, the facility is constructed and will operate in

2. Construction (as used in ASME Code, Section III, Division 1): an all-inclusive term comprising documentation, materials selection and qualification, design, fabrication, examination, testing, inspection, and certification required in the manufacture and installation of an item.

conformity with the provisions of the Atomic Energy Act and the NRC's regulations. The proposed ITAAC will assure that the facility is constructed, operates, and will continue to operate to the certified design conditions.

This subsection further describes the application of the ASME Code, Section III (Reference 3.9-1) to safety-related components and core support structures. The design and installation criteria applicable to over-pressure protection devices are presented along with the requirements for operability assurance related to maintaining structural and leak tight integrity, pressure retaining capability, and required functionality of pumps and valves.

In order to assure that ASME components meet the service level stress requirements and functionality requirements, the ASME Code, Section III, NCA-2000 (Reference 3.9-1) requires that a design specification be prepared for ASME Code, Section III, Class 1, 2, and 3 components. The design specifications for ASME Code, Section III, Class 1, 2 and 3 components, supports, and appurtenances are prepared under administrative procedures that meet or exceed the ASME Code, Section III rules. These specifications conform to and are certified to the requirements of ASME Code, Section III depending on the component classification. The Code also requires a design report for safety-related components, to demonstrate that the component design meets the requirements of the relevant ASME design specification and the applicable ASME Code, Section III (Reference 3.9-1).

The seismic and accident load conditions for primary components and piping design are summarized in Reference 3.9-58.

3.9.3.1 Loading Combinations, System Operating Transients, and Stress Limits

This subsection establishes the criteria for the selection and definition of design limits and loading combinations associated with normal operation, postulated accidents, and specified seismic and other transient events for the design of safety-related ASME Code, Section III (Reference 3.9-1) components. These load combinations may include the effects of dead load, internal and external pressure, component and insulation weights, and fluid effects due to various system operational characteristics including testing, predicted thermal expansion, seismic induced dynamic loads and displacements, support reaction loads, and other loads as specified by the requirements of the ASME Code, Section III (Reference 3.9-1), Subsection NB, NC, ND, NF or NG Code depending upon component and Service Level classification.

The basis of the ASME component design acceptance for applicable loading combinations involves comparison of calculated stress and fatigue demand levels to acceptable stress and fatigue capacity allowables specified by ASME Code, Section III (Reference 3.9-1). The ASME Code acceptance standards differ depending on whether a component is classified as ASME Code, Section III, Class 1, 2, or 3. In addition to the ASME classification, plant operational modes and frequency of system operating and/or transient events are used to define which ASME service limit (Level A [Normal], Level B [Upset], Level C [Emergency], Level D [Faulted], and Test) applies. These service limits are defined in Subsection 3.9.1. The system operating and/or transient events are developed from guidance provided in ANS N51.1-1983 (Reference. 3.9-2). The design transients for the US-APWR Class 1 RCS are defined in Subsection 3.9.1. These

transients are determined based on a 60-year plant operational life and are classified into the ASME Level A, Level B, Level C, and Level D service limits, and test conditions, depending on the expected frequency of occurrence and severity of the event. The design transients for ASME Level A and B service conditions are required by the ASME Code, Section III, Subsection NB-3200 (Reference 3.9-1), in the evaluation of cyclic fatigue for the Class 1 components and piping. The effects of seismic events are also included in the evaluation of cyclic fatigue by defining a 1/3 SSE seismic event as Level B service condition which will require fatigue evaluation of both thermal and seismic effects. The number of cycles considered are based on equivalent of usage factor where 300 cycles at 1/3 SSE stress range equals the same usage factor as 20 cycles a SSE stress range (see Reference 3.9-34).

3.9.3.1.1 Seismic Load Combinations

As indicated in Subsection 3.9.1, mechanical components, classifications are in accordance with ASME Code, Section III, Subsection NCA-2000 (Reference 3.9-1) for Division 1 systems, components, and supports. The required load combinations including seismic events for ASME Code, Section III (Reference 3.9-1), Classes 1, 2, and 3 components and structures are presented in Tables 3.9-3 and 3.9-4, and for piping and pipe supports, in tables within Section 3.12. Table 3.9-5 provides the definition of terms associated with Tables 3.9-3 and 3.9-4.

Two occurrences of an SSE are assumed in the qualification of seismic category I systems and components, including core support structures, using the Level D service condition for pressure boundary integrity. Additionally, fatigue sensitive components are qualified for cyclic motion due to earthquakes smaller than the SSE. The seismic effects of seismic events, with amplitude not less than 1/3 SSE amplitude[3], are included in the analyses. The number of earthquake motion cycles used is based on IEEE Std 344-2004, Appendix D (Reference 3.9-34) guidance. This guidance requires the equivalent fatigue damage of two full SSE events with 10 high-stress cycles per event, therefore, 20 high-stress cycles. One SSE cycle is equivalent to 15 cycles at 1/3 SSE amplitude in accordance with Reference 3.9-34; therefore, 20 full SSE cycles are equivalent to 300 cycles at 1/3 SSE amplitude.

Tables 3.9-3 and 3.9-4 provide required loads and load combinations associated with ASME Code, Section III (Reference 3.9-1), Class 1, 2, 3 and Class CS systems, components and supports.

---

3. OBE as used in Table 1 of SRP 3.9.3, Appendix A and in ASME Code, Section III for stress evaluation subject to fatigue is 1/3 SSE with SSE damping. The earthquake inertial and anchor movement loads used in the Level B stress intensity range and alternating stress calculation is taken as 1/3 of the peak SSE inertial and anchor movement loads. In this case, the number of cycles to be considered for earthquake loading is 300 as derived in accordance with Appendix D of IEEE Standard 344-2004 (Reference 3.9-34). In certain cases for non-standard SSCs, the 1/3 SSE may be adjusted higher for site-specific design since the site-specific value of OBE is determined by the COL Applicant as discussed in “OBE” of DCD Subsection 3.7.1.1. If used, the COL Applicant is to demonstrate that applicable stress, strain, and deformation limits are satisfied based on the site-specific OBE selected.

The SSE is considered combined under the following PCs:

- Normal plant full (100%) power conditions and normal plant operating temperatures are considered for material properties and are used in combination with SSE.
- It is assumed that a simultaneous Loss of Offsite Power and a single failure within a safety-related system occur as a result of an SSE event. In addition, it is assumed that non-safety related systems are unavailable.
- For concurrent events, the timing sequence and initiating conditions that occur between the SSE and occasional transients such as valve discharge are considered combined when the SSE is the initiator of the transient condition. The SSE duration is considered as 22 seconds. Non-seismic structures and components are assumed to be functionally and structurally unavailable at the beginning of the SSE. A single failure assumption is considered for a single active component.
- An evaluation of non-safety related systems is performed to assure that their failure in an earthquake does not impact or jeopardize plant safe shutdown or required post accident monitoring.
- The fire protection lines that could affect safe-shutdown equipment or required post accident equipment through rupture and/or flooding during or following a seismic event are required to be seismically qualified.

In addition to specified events based on the system operational occurrences during normal and accident events, the US-APWR is designed for special combinations of events based on past precedents and regulatory guidelines, in addition to those events and event combinations based on the probability of occurrence. These additional load combinations are not considered as event sequences. In order to assure an adequate safe-shutdown margin, the SSE loads are combined concurrently with these loads. Examples of these past precedent and regulatory guideline loading conditions are as follows:

- SSE is combined with postulated pipe rupture loads for ASME components, component supports, and support structures. Subsections 3.6.1 and 3.6.2 discuss postulated pipe rupture and the requirements for mitigating pipe rupture effects.
- As described in Section 3.8, the SSE is combined with containment design pressures for the qualification of the containment pressure boundary.
- The polar crane and associated rigging equipment are qualified to withstand an SSE event without failure while performing a heavy load lift.

3.9.3.1.2 Loads for ASME Code, Section III, Class Components, Core Support, and Component Supports

The loads and combination of loadings for Class 1 component, core supports, and component support including system operating transients are considered for each component support within a system, including the designation of the appropriate service

stress limit for each loading combination. These loads are listed and briefly defined in Table 3.9-5. Additional descriptive information on the loads, stress limits, and analysis methods for piping is presented in Section 3.12. The loadings are described in the paragraphs that follow.

Pressure loading is categorized as either design pressure or operating pressure.

- The design pressure is used in calculating required minimum wall thickness per the ASME Code, Section III (Reference 3.9-1).
- The operating pressure is associated with qualification of the ASME Code, Section III (Reference 3.9-1), Level A, B, C, and D service conditions.

Dead load considers weights of piping, components, insulation, attached appurtenances, and internal fluid weights. Dead load weight is equivalent to 1.0 g acceleration in the vertical downward direction.

- In the static evaluation of the piping system, the piping model is divided into discrete distributed mass points and these loads are based on piping material weight, insulation weight and fluid properties during normal operating conditions.

The SSE loading analysis is performed for pressure boundary integrity of piping and components for Class 1 systems.

- Seismic loads are identified as either seismic inertia loads or seismic anchor motion loads. The seismic inertia loads represent the dynamic primary portion of the response, and the seismic anchor motion loads represent the static secondary portion.
- Subsection 3.7.3 and Section 3.12 provide the seismic analysis methods used in qualification of piping systems.

Transient loading resulting from a postulated pipe break is analyzed.

- Dynamic flow and pressure loads are analyzed.
- Postulated pipe breaks and the interaction effects on safety-related components and structures are considered based on the requirements of GDC 4 and NUREG-0800, SRP 3.6.1 (Reference 3.9-35) and SRP 3.6.2 (Reference 3.9-36). The pipe rupture event considered for loading is the largest pipe that does not satisfy LBB criteria.
- Asymmetric blowdown load is discussed in Section 3.9.2.5.
- DCD Subsections 3.6.1 and 3.6.2 define postulated pipe break locations and requirements for the evaluation of postulated pipe breaks.

LBB criteria described in Subsection 3.6.3 are used in accordance with GDC 4 and NUREG 1061, Volume 3 (Reference 3.9-37), to determine the following:

- The RCL, the specific RCL ASME Code, Section III, Class 1 branch lines and main steam lines listed in Appendix 3B that can be exempted from required pipe rupture considerations by meeting LBB criteria.
- Piping in these systems that do not meet LBB screening criteria and; therefore, require pipe rupture analysis.

Additional transient loadings are considered as follows:

- Sudden opening and closing of active valves, relief valves and safety valves.
- Components and piping evaluated for the dynamic response to transient loads.

Additional loading events and the effects on safety-related equipment are examined. The loads are evaluated for local and global stress effects on a case-by-case basis and are not combined with any other Level C or D service condition. These additional loads include the following conditions:

- A RCP locked rotor event in the RCL is evaluated for pressure effects and dynamic fluid transient effects on the RCP, SG channel head, and reactor coolant piping. During this event, the RCP is assumed to come to a rapid (but not instantaneous) stop and to transfer the angular momentum through the motor enclosure and pump casing to the SG nozzle and reactor coolant piping. The stresses calculated for this event are evaluated using Level D service limits for the immediately affected components and supports in the affected RCL and using Level B service limits for components in the other RCL. The Level B service stress limits for components outside the affected loop are used for both stress and functionality. This event and analyses are further described in Subsection 5.4.1, relative to the RCP.
- An evaluation of heavy lift loads for various components is performed to assure that adequate design measures have been considered in the qualification of these components. There are several components that fall into this category. An example is the RV head lifting rig, which is part of the load path for the lifting function of the RV head. The initial lifting of all major RCS equipment including RCP, SG, RV, and Pressurizer are designed and evaluated for heavy load lifting.

ASME Code, Section III (Reference 3.9-1), Subsection NB-3200 requires consideration of design transient conditions for Class 1 components. Subsection 3.9.1.1 describes these design transients. The design of Class 1 components involves evaluating global and local stresses in components and evaluating the fatigue of these components to assure the integrity of the RCS.

The transient conditions selected for fatigue evaluation are based on conservative estimates of the magnitude and anticipated frequency of occurrence of the temperature and pressure transients resulting from various plant operating conditions. The selection of transient conditions is performed using the following criteria:

- Level A and B service condition design transients are evaluated in the analysis of cyclic fatigue.

- Up to 25 stress cycles for Level C service conditions may be excluded from cyclic fatigue analysis in conformance with ASME Code, Section III (Reference 3.9-1) criteria.
- Any Level C service conditions which are in excess of the 25 cycle limits are evaluated for the effect on cyclic fatigue using Level B criteria.

For the evaluation of cyclic fatigue, the cycles included for seismic events are evaluated using Level B criteria and cyclic loading associated with 1/3 SSE events, and are not excluded from the fatigue evaluation regardless of the size of the stress range considered.

The effects of seismic events on the design of components other than piping are considered in one of the following ways. The effects of seismic events are considered by including 20 full cycles of the maximum SSE stress range in the fatigue analysis. Alternately, a 1/3 SSE cyclic event is used as discussed in Subsection 3.9.3.1.

Thermal Stratification, Cycling, and Striping

Thermal stratification, cycling, and striping are phenomena that have resulted in pipe cracking at nuclear power plants. As a result of these incidents, the NRC has issued several bulletins, which are discussed in Subsection 3.12.5.10.

3.9.3.1.3 ASME Code, Section III, Class Components and Supports and Class CS Core Support Loading Combinations and Stress Limits

ASME Code, Section III, Class 1 load, load combinations, load definitions, and required stress criteria for component, component supports, and core support structures are provided in Tables 3.9-3, 3.9-4, 3.9-5, and 3.9-6.

Appendix F of ASME Code, Section III “Rules for Evaluation of Service Loadings with Level D service Limits” (Reference 3.9-1), provides the stress limits for Level D service that allow inelastic deformation. Pressure boundary integrity and core support structural integrity are confirmed by meeting the limits of Appendix F, however, meeting Appendix F limits does not assure operability. The required analysis of cyclic fatigue of piping is presented in Section 3.12 and associated design transient requirements for Class 1 components and component supports are discussed in Subsection 3.9.1.

The ASME Code, Section III (Reference 3.9-1), Class 1 stress analyses for components and core structures consider sustained loads (including dead load, pressure, and thermal expansion), system operational transient loads (thermal and fluid pressure transients), seismic loads, and pipe rupture loads (design pipe breaks, unless modified by LBB evaluations, and LOCA). Additionally, ASME Code, Section III, Class 1 pressure boundary components are subject to fatigue usage evaluations over the 60-year plant life.

The assessment of the environmental impact on fatigue of ASME Code, Section III, Class 1 components follows the requirements delineated in RG 1.207 (Reference 3.9-38).

The SSE is combined with the pipe rupture loads using SRSS methodology. This loading combination is evaluated for ASME Code, Section III (Reference 3.9-1) components and piping that are required to mitigate the effects of the postulated pipe rupture and the

supports for those components and piping. Further explanation of pipe rupture effects is provided in Subsections 3.6.1, 3.6.2, and 3.6.3 and Section 3.12.

3.9.3.1.4 RCL Piping Model

Appendix 3C provides a detailed description of the RCL piping, components, and support system model. The model consists of the primary hot, cold, and cross-over loop piping, the connecting equipment components that include the RV, the SG, and the RCP for each loop and the respective RCL component supports.

The US-APWR has four loops and, therefore, four loop models that include the hot, cold and crossover legs and nozzles. These combined system models include both the translational and rotational stiffness and mass characteristics of the RCL piping and components, and the stiffness of the associated supports. The resulting static and dynamic loads generated from the RCL and the component support models provide the end loads and deflections to the connecting components for each loop analyzed.

Each major connecting equipment component, including SG, RV, and RCP, is modeled independently, including its support structures. The details of the models are developed from criteria established in Section 3.10 for mechanical components, in addition to the required load combinations for Class 1 piping and supports as presented in Section 3.12. The RCL analysis for the SSE presented in Appendix 3C uses the time-history direct integration, time history modal analysis, or response spectra modal analysis methods for seismic dynamic analysis.

A coupled model including mass and stiffness of the RCL, R/B, PCCV, and Containment Internal Structure is seismically evaluated using a time-history analysis with dynamic input defined from the CSDRS (Subsection 3.7.1). Subsection 3.7.2.3 provides additional discussion on coupled modeling.

Per Subsection 3.6.3, the main RCS piping and the surge line are qualified to LBB criteria; thus, eliminating postulated breaks in that piping. The LBB criteria are used to evaluate RCS piping 6 inches or larger. Additionally, external loads are applied to the RCS piping for connecting piping that does not meet the LBB requirements. The RCS analysis for pipe breaks uses time-history or equivalent static analysis to determine the structural response due to jet impingement loads, thrust loads, and subcompartment pressure loads.

Section 3.9.1 discusses the various thermal and pressure transients that can occur as a result of plant operations. For the RCS thick-walled piping, a time-varying temperature distribution will occur across the pipe wall section and requires evaluation in accordance with ASME Code Section III, Subsection NB (Reference 3.9-1).

Through-wall heat transfer gradient occurs due to a time dependent convective heat transfer between the inner pipe fluid surface and the outer pipe surface. The outer pipe surface is assumed in an isothermal condition and the inner pipe surface assumes the RCS fluid temperature. The average wall temperature, T_a, is an integrated temperature distribution over time that results from fluid temperature fluctuations. This average temperature distribution over time is used to determine load sets related to cumulative fatigue usage. In accordance with ASME Code, Section III, Subsection NB-3653

(Reference 3.9-1), peak incremental stress intensities are calculated from thermal, pressure, and moment load sets are developed and combined to yield the highest alternating stress intensity ranges. An incremental usage factor is developed based on the ASME material fatigue curves. The procedure is repeated to create the next most severe alternating stress range, until the combinations have an allowable number of cycles greater than 10^{11}. The cumulative fatigue usage factor is the summation of all incremental usage factors at this cycle limit.

3.9.3.1.5 ASME Code, Section III, Class 2 and 3 Components

The ASME Code, Section III (Reference 3.9-1), Subsections NC and ND provide the required stress qualification criteria for ASME Code, Section III, Class 2 and 3 components including vessels, valves, and pumps. Table 3.9-3 provides the loading combinations used in qualification of these components. The load definitions from Table 3.9-3 are located in Table 3.9-5. Table 3.9-8 provides the stress criteria for these components. Section 3.12 provides stress evaluation criteria and analysis methods that are specific to Class 2 and 3 piping.

Code Class 2 and 3 components that are subject to thermal cyclic effects or dynamic cyclic loads are subject to fatigue evaluations per NUREG-0800, SRP 3.9.3 (Reference 3.9-27). Fatigue analyses of components and supports are completed in accordance with the ASME Code, Section III requirements and are based on a 60 year design life of the plant.

Class 2 and 3 safety-related active components (including valves and pumps) and the associated supports require functionality, functional capability, and operability. Functionality and functional capability for these components and supports consist of the ability of a component, including its supports, to deliver a rated flow and to retain dimensional stability when the design and service loads, and their resulting stresses and strains, are at prescribed ASME Code, Section III (Reference 3.9-1) service levels. The operability of the components and supports consists of the ability of an active component, including its support, to perform the mechanical motion required to fulfill its designated safety function consistent with operational limits and Technical Specification requirements. Active valves and pump requirements are further described in Subsection 3.9.3.3 on pump and valve operability assurance.

In addition to the above requirements, stress demand is kept low enough in relation to stress capacity limits for these components so that the pressure-retaining boundary integrity is maintained.

3.9.3.2 Design and Installation of Pressure-Relief Devices

The design of pressure relieving valves complies with the requirements of ASME Code, Section III (Reference 3.9-1), Appendix O, “Rules for the Design of Safety Valve Installations.” When there is more than one valve on the same run of pipe, the sequence of valve openings is based on the anticipated sequence of valve opening. This sequence is determined by the setpoint pressures or control system logic. The applicable stress limits are satisfied for the components in the piping run and connecting components including supports. The reaction forces and moments are based on a DLF of 2.0 unless a dynamic structural analysis is performed to calculate these forces and moments.

3.9.3.2.1 Pressure Relief Devices Connected to the Pressurizer

The pressurizer safety valves provide over-pressure protection for the RCS. The safety valves connected to the pressurizer are the only ASME Code, Section III (Reference 3.9-1), Class 1 pressure relief valves in the US-APWR.

The pressurizer safety valves are supported by the downstream piping module of safety depressurization valves and the safety valves. The safety valves are connected to four nozzles located in the pressurizer upper head. The spring loaded safety valves are designed to prevent system pressure from exceeding the design pressure by more than 10%.

If the pressure exceeds the setpoint of the safety valve, the valve opens and steam is discharged to the pressurizer relief tank. The pressurizer volume is sized so that opening of the safety valve is not required for any Level A service condition transient. The connecting pipe between the pressurizer and the safety valves includes a loop seal in order to prevent the leak of the steam and any non-condensible gas in the upper portion of the pressurizer.

The valve opening generates transient thrust forces at each change in flow direction or area. The analysis of the piping system and support considers the transient forces associated with valve opening.

For each pressurizer safety valve, an analytical hydraulic model is developed. The piping from the pressurizer nozzle to the pressurizer relief tank sparger is modeled as a series of single pipes. The pressurizer is modeled as a reservoir that contains steam at constant pressure and temperature. Fluid acceleration inside the pipe generates reaction forces on the segments of the line that are bounded at either end by an elbow or bend. Reaction forces resulting from fluid pressure and momentum variations are calculated. These forces are defined in terms of the fluid properties for the transient hydraulic analysis.

3.9.3.2.2 Pressure Relief Devices for Class 2 Systems and Components

Pressure relieving devices for ASME Code, Section III (Reference 3.9-1), Class 2 systems include the safety valves and power operated relief valves on the steam line and the relief valve on the containment isolation portion of the normal RHRS.

The design and analysis requirements for the safety and relief valves and discharge piping for the steam line are described in Subsection 10.3.2.

In addition to providing over-pressure protection for the normal RHRS, the relief valve also provides low temperature over-pressure protection for the RCS. The location and connection for the valve on the RHRS are discussed in Subsection 5.4.7.

3.9.3.2.3 Design and Analysis Requirements for Pressure Relieving Devices

The design of pressure-relieving devices can be generally grouped in two categories: open discharge and closed discharge.

3.9.3.2.3.1 Open Discharge Relief Device

An open discharge is characterized by a relief or safety valve discharging to the atmosphere or to a vent stack open to the atmosphere. The design and analysis of open discharge valve stations includes the following considerations:

- Stresses in the valve header, the valve inlet piping, and local stresses in the header-to-valve inlet piping junction due to thermal effects, internal pressure, seismic loads, and thrust loads.
- Thrust forces includes both pressure and momentum effects.
- Where more than one safety or relief valve is installed on the same pipe run, valve spacing requirements are as specified in the ASME Code (Reference 3.9-1).
- The minimum moments to be used in stress calculations are those specified in the ASME Code (Reference. 3.9-1).
- The effects of the valve discharge on piping connected to the valve header.
- The reaction forces and moments used in stress calculations include the effects of a DLF, or are the maximum instantaneous values obtained from a time-history structural analysis.

3.9.3.2.3.2 Closed Discharge Relief Device

The closed discharge system is characterized by piping between the valve and a tank or some other terminal end. Under steady-state conditions, there are no net unbalanced forces. The initial transient response and resulting stresses are determined using either a time-history computer solution or a conservative equivalent static solution. In calculating initial transient forces, pressure and momentum terms as well as water slug effects are included.

3.9.3.3 Pump and Valve Operability Assurance

Mechanical components that are classified as safety-related must be shown as capable of performing their function during the life of the plant under the various postulated loading conditions. Active pumps and valves have faulted condition functional requirements. The design and service limits specified by the ASME Code, Section III (Reference 3.9-1) are established to confirm the pressure-retaining or support function of the ASME Code-class component. To assess the functional capability of the required components to operate, additional criteria and considerations, including collapse and deflection limits, are developed. These criteria are included as part of the equipment specifications. Section 3.10 provides details of these required criteria.

3.9.3.3.1 Pump Operability

Active pumps are those whose operability is relied upon to perform a safety-related function during transients or events considered in the respective operating condition categories. Inactive pumps are those whose operability is not relied upon to perform a

safety-related function for the various transients and plant conditions. Table 3.9-7 lists the active pumps. The COL Applicant is to identify the site-specific active pumps.

Table 3.9-6 provides the stress limits used for active Class 1 pumps. Table 3.9-8 provides the stress limits used for active Class 2 and Class 3 pumps.

3.9.3.3.2 Valve Operability

Active valves are those whose operability is relied upon to perform a safety-related function during transients or events considered in the respective operating condition categories. Inactive valves are those whose operability is not relied upon to perform a safety-related function for the various transients and plant conditions. Active valves are identified in Subsection 3.9.6.

Table 3.9-6 provides the stress limits used for active Class 1 valves. Table 3.9-8 provides the stress limits used for active Class 2 and Class 3 valves.

Active valves are subjected to a series of tests and inspections prior to service and during the plant life. These tests and inspections, along with controls on maintenance and operation, provide the appropriate reliability of the valve for the design life of the plant.

Prior to installation, the following tests, as appropriate to the function and mission of the valve, are performed: shell hydrostatic test, backseat and main seat leakage tests, disc hydrostatic tests, and operational tests to verify that the valve opens and closes.

Cold hydro tests, hot functional tests, periodic inservice inspections, and periodic inservice operations are performed in situ to verify the functional capability of the valve.

Section 3.11 describes the operability qualification of motor operators for the environmental conditions.

For active valves with extended structures, an analysis of the extended structure is performed for equivalent static SSE loads applied at the center of gravity of the extended structure.

In addition to these tests and analyses, a representative number of valves of each design type are tested for verification of operability during a simulated Level D service condition SSE condition event by demonstrating operational capabilities within the specified limits.

Valve sizes that cover the range of sizes in service are tested.

When seismic qualification is based on dynamic or equivalent static load testing for structures, systems or subsystems that contain mechanisms that must change position in order to function, operability testing is performed for the SSE preceded by one or more earthquakes. The number of preceding earthquakes is calculated based on IEEE Std 344-2004, Appendix D (Reference 3.9-34) to provide the equivalent fatigue damage of two SSE events.

The seismic qualification testing procedures for valve operability testing are as follows:

- The valve is mounted in a manner that will conservatively represent typical valve installations. The valve includes the operator, accessory solenoid valves, and position sensors when attached to the valve in service.

The operability of the valve during a Level D service condition is demonstrated by satisfying the following criteria:

- A static load or loads equivalent to those resulting from the accelerations due to Level D service conditions is applied to the extended structure center of gravity so that the resulting deflection is in the nearest direction of the extended structure. The design pressure of the valve is applied to the valve during the static deflection tests.

- The valve is cycled while in the deflected position. The valve must function within the specified operating time limits while subject to design pressure.

- Electrical motor operators, position sensors, and pilot solenoid valves necessary for operation are qualified in accordance with IEEE seismic qualification standards (Reference 3.9-15). Section 3.10 describes the methods and criteria used to qualify electrical equipment.

Active valves that do not have an extended structure, such as check valves and safety valves, are considered separately.

Check valves are characteristically simple in design, and their operation is not affected by seismic accelerations or the maximum applied nozzle loads. The check valve design is compact, and there are no extended structures or masses whose motion could cause distortions that could restrict operation of the valve. These valves are designed such that if structural integrity is maintained, the valve operability is maintained. In addition to these design considerations, check valves also undergo in-shop hydrostatic test, in-shop seat leakage test, and periodic in situ valve testing and inspection.

Pressurizer and main steam safety valves are qualified for operability in the same manner as valves with extended structures. The qualification methods include analysis of the bonnet for equivalent static SSE loads, in-shop hydrostatic and seat leakage tests, and periodic in-situ valve inspection.

To verify analysis methods, representative safety valves are tested. This test is described as follows:

- The safety valve is mounted to represent the specified installation.

- The valve body is pressurized to its normal system pressure.

- A static load representing the Level D service condition load is applied to the top of the valve bonnet in the weakest direction of the extended structure.

- The pressure is increased until the valve actuates.

- Actuation of the valve at its setpoint provides for operability during the Level D service condition load.

Using these methods, the active valves in the system are qualified for operability during a Level D service condition event. These methods conservatively simulate the seismic event, and confirm that the active valves perform their safety-related function when necessary.

3.9.3.4 Component Supports

Supports and their attachments for essential ASME Code, Section III (Reference 3.9-1), Class 1, 2, and 3 components are designed in accordance with Subsection NF up to the interface of the building structure, with jurisdictional boundaries as defined by Subsection NF. The building structure component supports (connecting the NF support boundary component to the existing building structure) are designed in accordance with “Nuclear Facilities-Steel Safety-Related Structures for Design, Fabrication and Erection”, ANSI/AISC N690, (1994 edition) (Reference 3.9-39), and the AISC Manual for the Design, Fabrication, and Erection of Structural Steel (Reference 3.9-40). The applicable loading combinations and allowables used for design of supports are shown on Tables 3.9-3, 3.9-4, and 3.9-5. The stress limits are in accordance with ASME Code, Section III (Reference 3.9-1), Subsection NF and Appendix F, “Service Limits and Loading Combinations for Class 1 Linear-Type Supports”, RG 1.124 (Reference 3.9-41) and “Service Limits and Loading Combinations for Class 1 Plate-and-Shell-Type Component Supports”, RG 1.130 (Reference 3.9-42).

The maximum calculated static and dynamic deflections of the component at support locations do not exceed the allowable limits specified in the component design specification. Seismic category II pipe supports are designed so that the SSE would not cause unacceptable structural interaction or failure. The support design follows the intent and general requirements specified in ASME Code, Section III (Reference 3.9-1), non-mandatory Appendix F. These requirements are used to evaluate the total design load condition with respect to the requirements of the SSE condition to assure that the structural integrity of the pipe supports is maintained.

Supports are classified into two classifications as manufactured standard support, or supplementary steel support described as follows:

Manufactured Standard Supports

Typical manufactured standard supports are load-rated and based on ASME Level A (Normal), Level B (Upset), Level C (Emergency), and Level D (Faulted) service conditions. Their design and testing are in accordance with the ASME Codes, Section III (Reference 3.9-1) or equivalent structural codes. The following major manufactured standard supports are typically used and are described as follows.

3.9.3.4.1 Spring Hangers

Spring hangers provide dead weight support and allow a specified down travel and up travel in excess of the specified cold and hot thermal movements. The operating load on spring hangers is the load caused by dead weight and spring hangers are sized to these loads. The hangers are evaluated for expected movements and field-calibrated to assure that adequate consideration of operational thermal conditions has been included.

3.9.3.4.2 Snubbers

Snubbers are designed to allow for the free thermal expansion of piping and components in the axial direction of the snubber while restraining sudden dynamic movement of piping and components. The loads on snubbers are the loads created by dynamic events (e.g., seismic, building vibrations as applicable due to LOCA, and safety relief valve discharge, discharge through a relief valve line or valve closure) during various operating conditions. Snubbers restrain piping against a response to the dynamic excitation and to the associated differential movement of the piping system support anchor points. The criteria for locating snubbers and ensuring adequate load capacity, the structural and mechanical performance parameters used for snubbers and the installation and inspection considerations for the snubbers are as follows.

3.9.3.4.2.1 Assurance of Snubber Functionality

A structural analysis and systems evaluation is performed. Systems and components which utilize snubbers as shock arresters are analyzed to determine the interaction of these devices with the systems and components to which they are attached. Snubbers can be used as shock arresters, and when used for multiple applications, cyclic fatigue is considered.

Factors included in the fatigue evaluation are as follows:

- Component movement or amplitude of the unsupported system.
- Interaction force from system component to snubber and corresponding reaction on system or component due to restricting motion.
- Frequency of system vibration and number of load cycles.
- Verification of system or component and snubber fatigue strength

A fatigue evaluation is not required if it can be demonstrated that:

- The number of load cycles that the snubber will experience during normal plant operating conditions is small (less than 20,000), or if the motion during normal plant operating conditions does not exceed snubber design movement range.
- Overall thermal movements are verified and can be shown not to exceed the snubber lock-up velocity. Snubbers utilized in systems or components that experience high thermal growth rates, either during normal operating conditions or as a result of anticipated transients, are checked.

3.9.3.4.2.2 Required Load Capacity Versus Load Demand

The loading demand calculated in the piping dynamic analysis, and described in Subsection 3.7.3.1, cannot exceed the snubber load capacity for the design, normal (Level A), upset (Level B), emergency (Level C), and faulted (Level D) ASME service load conditions.

3.9.3.4.2.3 Snubber Location Requirements

Snubbers are located primarily in systems where dynamic support is required because thermal growth of the piping prohibits the use of rigid supports. The snubber locations and snubber support directions are initially considered in areas of high thermal growth and regions of dynamically induced high stresses. These locations and support directions are redefined by performing the dynamic analysis of the piping and support system. The piping stresses and support loads must meet the code requirements.

Physical locations for placing snubbers in the plant must consider on-going maintenance and the ability to set snubber position.

3.9.3.4.2.4 Snubber Mechanical and Structural Properties

In order to assure adequate snubber performance the following property characteristics are required:

- Consideration of appropriate analytical structural stiffness used in system modeling. The structural stiffness is affected by the overall snubber support assembly and alignment of the assembly. Flexibility in support assembly structure and alignment of the snubbers can affect the overall structural response of the system and associated components. The assembly stiffness is based on an evaluation of structural, hydraulic, and thermal properties and used in the system model.
- When multiple snubbers are used in the same support, a determination of proportional load sharing is required by determining the alignment and fitting clearances and tolerances along with the position angle of snubber placement.

3.9.3.4.2.5 Design Specifications

The design specification contains the following and includes the performance, structural, and mechanical properties of the snubbers as provided in the above subsections:

1. General functional requirement
2. Operating environment
3. Applicable codes and standards
4. Materials of construction and standards for hydraulic fluids and lubricants
5. Environmental, structural, and performance design verification tests
6. Production unit functional verification tests and certification
7. Packaging, shipping, handling, and storage requirements
8. Description of provisions for attachments and installation
9. Quality assurance and assembly quality control procedures for review

10. Acceptance by the purchaser

The COL Applicant is to assure snubber functionality in harsh service conditions, including snubber materials (e.g., lubricants, hydraulic fluids, seals).

3.9.3.4.2.6 Considerations for Inspection, Testing, Repair, and/or Replacement of Snubbers

An installation instruction manual contains complete instructions for the testing, maintenance, and repair of the snubber. It contains the required inspection locations and the periods of inspection. The program for inservice examination and testing of snubbers in the completed US-APWR construction is prepared in accordance with the requirements of ASME Code, Section XI (Reference 3.9-43) and ASME OM Code (Reference 3.9-13). Applicable industry and regulatory guidance is used including RG 1.192 (Reference 3.9-44). The intervals for visual examination are the subject of Code Case OMN-13 (Reference 3.9-45), which is accepted under the RG 1.192 (Reference 3.9-44). The examination and test procedures for the snubber is included in the IST program plan, developed per the implementation schedule as described in Chapter 13, Section 13.4. The applicable specification requires that hydraulic snubbers be equipped with a fluid level indicator so that the level of fluid in the snubber can be ascertained.

Snubber thermal movement is reviewed, adequate clearance and gaps are verified, including motion measurements, and acceptance criteria assure compliance with ASME Code, Section III (Reference 3.9-1), Subsection NF.

3.9.3.4.2.7 Snubber Design and Testing

Snubbers are designed to meet operational requirements for withstanding sudden dynamic motion due to earthquakes or sudden transient events. Snubbers must be capable of moving freely during thermal cycling under various modes of plant operation. In addition, snubbers are designed to structural capacity limits that are designated by the manufacturer. Design specifications require specific lock-up rates under dynamic loadings and free motion during thermal movements of snubbers that support plant components. The ASME Code, Section III, Subsection NF (Reference 3.9.1) is used as a basis for structural design of snubbers.

Important considerations in snubber design involve the following considerations:

1. ASME level A, B, C, and D service loads are applied and structural capacity checks are compared to the manufacturer’s design and/or test structural capacities associated with these ASME levels.

2. The snubber manufacturer supplies stiffness values for the model snubber, however stiffness consideration is taken for the effect of snubber end hardware configurations and attached supplementary steel supports. The combined effect is evaluated and a representative piping stress analysis model stiffness is derived.

3. The as-built snubber orientation is examined to determine if snubber binding could occur during component thermal motion and if the snubber is aligned outside of its manufacturer’s recommended settings.

4. When multiple snubbers are used at a component location, an evaluation is performed at each application location to determine the effect of as-built misalignment. This multiple snubber misalignment requires a mechanistic evaluation of stiffness and load proportioning to each snubber.

5. For large bore snubbers of greater than 50 kip capacity, the recommended snubber design and test recommendations provided in NUREG/CR-5416 (Reference 3.9-46) are followed.

6. Specific environmental design considerations and snubber functionality is assured under harsh service conditions. See Subsection 3.9.3.4.2.5.

Important considerations in a snubber test program include but are not limited to the following:

1. Snubber cold position to hot position thermal movement is determined as part of the piping stress analysis and verified visually during initial plant operation. If plant-verified thermal movements are determined outside of the analytical design range, an evaluation of thermal movement acceptability is performed and required adjustments are made to either the stress model or the snubber configuration.

2. Based on initial in-situ snubber thermal motion testing, a comparison of test data and analytical data assures that the piping or component stress analysis model and as-built snubber configuration performs within the analytical boundaries. For hydraulic snubbers, tested control valve bleed rates are compared with predicted rates of thermal movement under thermal transient conditions. Appropriate control valve adjustments are made as required. Sample load testing beyond snubber manufacturer rated service loads is performed to assure snubber functional compliance.

3. In order to assure continual functional operation of snubbers associated with safety-related components, the licensee is required to develop an ASME Section XI (Reference 3.9-43) in-service snubber testing program and an associated table or database of snubbers requiring inspection. This table or database includes detailed information for snubbers that are associated with a safety-related component or system. This information can include frequency of inspection, hot and cold movements, service life, vendor identification information, service and environmental conditions, ASME Code designation, location reference and installation drawing references and other necessary specific data.

3.9.3.4.2.8 Snubber Installation Requirements

A snubber installation specification with appropriate drawing references, and hot and cold settings listed, is developedIn addition, instructions for adjusting and maintaining snubber condition are provided

3.9.3.4.2.9 Snubber Examination and Testing

Snubber IST Program requirements, which apply prior to and after plant operation, are in accordance with the ASME Code OM, Subsection ISTD (Reference 3.9-13). Program details are provided in Subsection 3.9.6.4.

3.9.3.4.3 Struts

Struts are pin-connected manufactured rigid passive axial supports with no active mechanism. Struts are used as rigid restraints at locations on piping and components where minor thermal motion occurs. The use of struts assists in stabilizing piping systems subject to the dynamic effects of earthquakes or dynamic transient events.

Supplementary Steel Supports

Supplementary steel supports are designed in accordance with the ASME Section III Subsection NF (Reference 3.9-1). These supports are fabricated from steel sections such as Steel tubing, wide flange sections, plate steel, and angle steel. These supports are usually welded in a permanent configuration and cannot easily be disassembled like manufacturer type supports that are pinned or bolted. Criteria specific to the design of supplementary pipe supports is contained in Section 3.12. Two classes of supplementary steel supports are frame type supports and special engineered pipe supports as specified below.

3.9.3.4.4 Frame Type Pipe Supports

Frame type pipe supports are generally used in environmental conditions not suitable for manufactured supports that have mechanical pinned connections. Similar to struts, frame type supports are not used at locations where the restraint of thermal pipe movement is excessive.

The design loads on frame type pipe supports are in accordance with those defined in Section 3.12 for pipe supports. Hot or cold gaps are incorporated in the design. Friction between the pipe and frame support that occurs as a result of sliding, considers an appropriate coefficient of friction to calculate friction loading on the support. Seismic inertia loads as well as static seismic loads are considered in the design of frame supports per ASME Code, Section III (Reference 3.9-1), Subsection NF.

For insulated pipes, special pipe guides such as pipe saddles with one or two way restraint may be used in order to minimize the heat loss of piping systems.

Frame type supports have a limited total gap of $1/8^{th}$ inch to avoid thermal binding due to radial thermal expansion of the pipe. For large pipes with higher temperatures, this gap is evaluated to assure that no thermal bending occurs. The minimum total gap is specified to assure that it is adequate for the thermal radial expansion of the pipe to avoid any thermal binding.

3.9.3.4.5 Component Support Baseplate and Anchor Bolt

The use of baseplates with concrete expansion anchors is minimized in the US-APWR. Concrete expansion anchors may be used for component supports. Design of component anchorage to concrete follows the requirements of Appendix D of ACI 349-06 (Reference 3.9-50) considering the limitations of RG 1.199 (Reference 3.9-51). All aspects of the anchor bolt design, baseplate flexibility and factors of safety are utilized as identified in IE Bulletin 79-02, Revision 2 (Reference 3.12-24).

3.9.3.4.6 ASME Code, Section III, Class 1, 2 , and 3 Component Supports

The establishment of the design/service loadings and limits are in accordance with the ASME Code, Section III (Reference 3.9-1), Division 1, Article NCA-2000 and Subsection NF. These loadings and stress limits apply to the structural integrity of components and supports when subjected to combinations of loadings derived from plant and system operating conditions and postulated plant events. The combination of loadings and stress limits are included in the design specification of each component and support. Where the design and service stress limits specified in the code do not necessarily provide direction for the proper consideration of operability requirements for conditions which warrant consideration, Section II.3 and Appendix A of SRP 3.9.3 (Reference 3.9-27), RG 1.124 (Reference 3.9-41) and RG 1.130 (Reference 3.9-42) are used for guidance. Where these stress limits apply, the treatment of functional capability, including collapse, deformation and deflection limits are evaluated and appropriate information is developed for inclusion into the design specification.

ASME Code, Section III (Reference 3.9-1) component supports are designed, manufactured, installed, and tested in accordance with all applicable codes and standards. Supports include hangers, snubbers, struts, spring hangers, frames, energy absorbers, and limit stops. Pipe whip restraints are not considered as pipe supports.

Section 3.13 provides the requirements for the design of bolts for component supports. Review of programs for ensuring bolting and threaded fastener adequacy and integrity is performed under NUREG-0800, SRP 3.13 (Reference 3.9-49).

The design and installation of all anchor bolts are performed in accordance with Appendix D to “Anchoring to Concrete”, American Concrete Institute (ACI) 349-06 (Reference 3.9-50) subject to the conditions and limitations specified in RG 1.199 (Reference 3.9-51).

It is preferable to attach pipe supports to embedded plates; however, surface-mounted baseplates with undercut anchor bolts can be used in the design and installation of supports for safety-related components.

The load combinations and allowable stresses for ASME Code, Section III (Reference 3.9-1), Class 1 component supports are given in Tables 3.9-4 and 3.9-6.

3.9.3.4.6.1 ASME Code, Section III, Class Component Supports Models and Methods

Due to the structural complexity of the ASME Code, Section III, Class 1 component supports and the various load conditions evaluated, the FE method of analysis is utilized.

The FE analysis support structure models are developed to determine support stiffness properties based on application of forces from the component to the support using elastic material properties. In addition, the support will add load to the component through the applied stiffness.

The Class 1 component supports are modeled using elements such as beams, plates, and springs, where applicable.

RV supports - The RV is supported by eight steel support pads, which are one-piece with the inlet and outlet nozzle forgings. The support pads are placed on support brackets, which are supported by a steel structure around the RV (baseplate). Radial movement, which results from the vessel expansion and contraction caused by temperature change, is accommodated by sliding surfaces between the shim plates and the support pads while the horizontal load in an earthquake is supported by the support brackets and the baseplate so that the center position of the vessel always remains unchanged. The support brackets, which are of box-shaped structure, are air cooled by the RV compartment cooling fans in order to minimize heat transfer from the RV to the concrete support portions through the support brackets.

SG supports - The SGs are supported by three lateral support locations on the SG shell, an upper lateral support structure, a middle lateral support and a lower lateral support structure, and support columns. The upper and middle lateral support structures on the SG use snubbers. The lower lateral support structure is a structure made of structural steel. The support structures for the upper and middle shell and channel head are designed by considering the thermal expansion of piping. At the same time, they can restrain the horizontal movement of the SG in the event of an earthquake or accidents. The support columns support vertical loads, and the upper and lower ends of the support pipe are pin-jointed, so as not to restrain the movement of the SGs caused by the thermal expansion of the piping.

RCP supports - Each RCP support system consists of a lateral support structure and three support columns that support the vertical loads of the RCP from the slab below. The support structures are constructed entirely of structural steel. The upper and lower ends of the columns are pin-jointed to permit the movement of the pumps caused by thermal expansion of the piping. The lateral support structure is designed considering the thermal expansion of the piping and also restrains horizontal movement of the reactor coolant pump in the event of an earthquake or other design basis accidents. The value of the support stiffness is determined considering the flexibility of the structural support members. The stiffness of the lateral support also includes flexibility of the RCP casing.

Pressurizer supports - The pressurizer is supported by an upper support structure and a lower support skirt. The upper support structure supports the pressurizer using a steel structure, while the lower structure supports the vertical load using a skirt welded to the bottom shell of the pressurizer. The upper support structure does not restrain the movement of the pressurizer caused by thermal expansion, but restrains horizontal movements in the events of an earthquake or accidents.

The structural adequacy of the ASME Code, Section III, Class 1 component support is verified by determining that the load and stress demand on the support is within the ASME Code, Section III (Reference 3.9-1), Subsection NF and Appendix F load and

stress capacity allowable limits with adequate stress and load margins to those limits. Externally applied loads for each system operating, system transient, and accident condition that are generated from the RCL piping analysis are applied to the major component (RV, SG, and pressurizer) and support structure and are appropriately combined with component generated support loads. The combination of loadings considered for each component support within the system, including the designation of the appropriate service stress for each loading combination is verified for consistency with the criteria in Appendix A, RG 1.124 (Reference 3.9-41) and RG 1.130 (Reference 3.9-42). Due to the complexity of the major equipment support structures, computerized FE analysis programs are used to determine the support stresses and reaction loads. The generated stresses and loads from these programs are verified to the appropriate ASME Code, Section III (Reference 3.9-1), Subsection NF and Appendix F equation, stress, and interaction allowable.

The US-APWR uses only analytical stress/load limit methods and does not use the test load method described in Appendix F for qualification of ASME Code, Section III, Class 1 Component supports designed to the ASME Code, Section III (Reference 3.9-1).

3.9.3.4.6.2 ASME Code, Section III, Class 2 and 3 Component Supports Models and Methods

ASME Code, Section III, Class 2 and 3 component supports for the nuclear steam supply system are generally of linear or plate and shell type; however, standard component supports may be used. Compliance with ASME Code, Section III (Reference 3.9-1), Subsection NF and Appendix F is required. ASME Level A, B, C, and D service load and load combination requirements are used in ASME Code, Section III qualification. ASME Code, Section III, Class 2 and 3 piping supports are designed and analyzed as indicated in Section 3.12.

Standard component supports are required to satisfy the requirements for the linear-type presented in this section.

Tables 3.9-4 and 3.9-8 outline the ASME Code, Section III (Reference 3.9-1), Class 2 and 3 component support requirements.

The analyses or test methods and associated stress or load allowable limits that are used in the evaluation of linear supports for Level D service conditions are those defined in Appendix F of the ASME Code, Section III (Reference 3.9-1).

The combination of loadings considered for each component support within a system, including the designation of the appropriate service stress for each loading combination are consistent with the criteria in Appendix A, RG 1.124 (Reference 3.9-41) and RG 1.130 (Reference 3.9-42).

1. Linear- type supports are designed to the following service level and stress limits:

    - Normal – The allowable stresses of Appendix XVII of ASME Code, Section III (Reference 3.9-1), as referenced in subsection NF, are employed for normal condition limits.

- Upset – Stress limits for upset conditions are the same as normal condition stress limits. This is consistent with Subsection NF-3320 of ASME Code, Section III (Reference 3.9-1).
- Emergency – For emergency conditions, the allowable stresses or load ratings are 33% higher than those specified for normal conditions. This is consistent with subsection NF of ASME Code, Section III (Reference 3.9-1) in which (see NF-3250 and NF-3260) limits for emergency conditions are 33% greater than the normal condition limits.
- Faulted – Stress limits are specified in Appendix F which assure that no large plastic deformations will occur (Stress less than 1.2 S_y). If any inelastic behavior is considered in the design, detailed justification is provided for this limit. Otherwise, the supports for active components are designed so that stresses are less than or equal to S_y. Thus, the operability of active components is not endangered by the supports during faulted conditions.

2. Plates and shells supports are designed to the following service level and stress limits:
   - Normal – Normal condition limits are those specified in Subsection NF-3320 of ASME Code, Section III (Reference 3.9-1).
   - Upset – Limits for upset conditions equal normal condition limits and are consistent with Subsection NF-3320 of ASME Code, Section III (Reference 3.9-1).
   - Emergency – For emergency conditions, the allowable stresses or load ratings are 20% higher than those specified for normal conditions.
   - Faulted – Same as faulted limits for linear supports.

3.9.3.4.7 Use of Energy Absorber and Limit Stops

Energy absorbers and limit stops are not used as ASME Code, Section III, Class 1, 2 and 3 component supports in the US-APWR design.

3.9.3.4.8 Snubbers Used as Component Supports

Snubbers are considered manufactured standard support components. Snubber manufacturers provide various sizes of snubbers and rated loading consistent with ASME Level A, B, C, and D service conditions. Snubbers are generally hydraulic; however, there are mechanical snubbers which have adequate functionality that is resistance to drift velocity change. Details of snubber design, testing, operation, maintenance, inspection, and other functional characteristics are presented in this subsection.

Snubber manufacturers are required to construct safety-related snubbers to ASME Code, Section III (Reference 3.9-1), Subsection NF standards. The US-APWR layout considerations include access for the snubber testing, inspection, and maintenance. The location and line of action of a snubber are selected based on the necessity of limiting

seismic stresses in the piping and nozzle loads on equipment and allowing for unrestricted thermal growth.

Snubbers are modeled as stiffness elements in the piping system seismic stress analysis. Under thermal growth conditions, there is little stiffness; however, under sudden dynamic motion the stiffness is large.

With the implementation of LBB criteria and the elimination of the analysis of dynamic effects of pipe breaks detailed in Subsection 3.6.3, the use of snubbers is minimized in LBB qualified piping systems.

Snubber operability determination is considered part of the ASME Code, Section XI (Reference 3.9-43) inspection program. The ASME OM Code (Reference 3.9-13) is used to develop the inservice testing plan.

3.9.4 Control Rod Drive Systems

3.9.4.1 Descriptive Information of CRDS

The control rod drive system (CRDS) provides one of the independent reactivity control systems, driving a rod cluster control assembly (RCCA) which consists of 24 rodlets and acts as a neutron absorber in the reactor core.

The CRDM inserts and withdraws the RCCA, thus, adjusting the core output. It is operated and controlled by the CRDM control system.

3.9.4.1.1 CRDM

The CRDM for the US-APWR is of the magnetically operated jacking type, which is based on the L-106A type CRDM which has been used in many operating plants in the United States and Japan. These design improvements do not affect operability.

The CRDM consists of a pressure housing, latch assembly, drive rod assembly, and coil stack assembly. The pressure housing involves the latch assembly and the drive rod assembly, and supports the coil stack assembly on the outside of the pressure housing.

The coil stacks are energized sequentially by electric power, which cause magnetic power in the latch assembly to move the latches. The latches hold and move the drive rod assembly which is connected with the RCCA. When de-energized, the coil stacks and the latches release the drive rod assembly. Then the RCCA is inserted within the core by gravity.

The position of the RCCA is measured by the rod position indicator assembly, which is mounted surrounding the rod travel housing. The rod position indicator assembly includes discrete coils which magnetically sense the ferromagnetic drive rod assembly when it moves through the coil centerline. This system is further described in Subsection 7.7.1.4.

A total of 69 CRDMs are mounted on top of the RV closure head and installed directly to the closure head in a vertical position.

Figure 3.9-3 show one CRDM unit that consists of four main assemblies as described below. The US-APWR CRDM design is improved in comparison to standard CRDM designs as follows.

- Butt welding is applied instead of a threaded connection and canopy seal weld to assure an extremely low probability of leakage, per GDC 14. Canopy seal weld design has had some experience of leakage in the United States and Japan.
- Chrome carbide coating is applied on tip of the latch arms where it engages the control rod drive rod to improve resistance to wear.

The pressure housings, without canopy seal welds, have been used in several plants in the United States and in Japanese PWR plants. Chrome carbide coating of latch arm surfaces has been applied to Japanese plants.

1. Pressure housing

The pressure housing consists of a rod travel housing and a latch housing, both of which are butt welded. The latch housing is butt welded to a CRDM nozzle of the RV head. This butt welded design results in an extremely low probability of primary coolant system leakage, per GDC 14.

The pressure housing is categorized as a Class 1 component in RG 1.26 (Reference 3.9-52) in that it constitutes a pressure boundary of the RCS. It is designed in accordance with ASME Code, Section III (Reference 3.9-1), Subsection NB. The material of the CRDM is described in Subsection 4.5.1.

The rod travel housing is the upper part of the CRDM pressure housing, which enshrouds the drive rod, facilitating its travel during withdrawal and insertion of the RCCA.

An eye bolt is attached on top of the rod travel housing for handling purposes, including handling the CRDM at the plant site, if necessary.

The latch housing is the lower part of the CRDM pressure housing, which contains the latch assembly. The latch assembly is fixed on the inner shelf of the cylindrical housing and is positioned by a threaded fastener. The outside of the latch housing supports the coil stack assembly.

2. Latch assembly

The functions of the latch assembly are to withdraw, insert, or hold the drive rod which is connected to the RCCA. Another function is to release the drive rod to rapidly insert the RCCA into the core when electrical power of the coils is cut off.

For that purpose, the Movable Gripper latches are moved up or down in 5/8th inch steps by the lift pole when its electric coil is energized or de-energized. The stationary gripper latches hold the drive rod assembly while the movable gripper latches are repositioned for the next stepping motion.

3. Drive rod assembly

The major part of the drive rod assembly is a long tube with grooves, the drive rod made of martensitic stainless steel. The assembly includes a coupling device to connect with the RCCA at the bottom end. The drive rod has machined grooves on a 5/8th inch pitch. The CRDM latches engage these grooves when holding or moving the drive rod up or down.

To permit remote operation, a disconnect button, a disconnect rod, and a locking button are located on the top of the drive rod assembly to manipulate the coupling device at the bottom end of the rod to connect or disconnect the RCCA.

4. Coil stack assembly

The coil stack assembly is installed outside of the latch housing and is comprised of coil housings, an electrical conduit and connector, and three coils.

The functions of the coils are as follows (see Figure 3.9-3):

- Lift coil (top) – lifts the movable gripper pole which holds the drive rod.
- Movable gripper coil (middle) – hold or release the drive rod caused by the moveable gripper latches
- Stationary gripper coil (bottom) – hold or release the drive rod caused by the stationary gripper latches and support the load of the drive rod assembly.

If necessary, the coil stack assembly can be removed and replaced.

3.9.4.1.2 Control Rod Withdrawal

The control rod withdrawal sequence is described as follows:

In the drive rod holding condition, both the Movable Gripper and the stationary gripper coil are energized, and the movable gripper and stationary gripper latches are swung into the grooves of the drive rod to increase the reliability of holding the drive rod. At this moment, the drive rod is supported by the stationary gripper latches, because there is a small gap (approximately 0.032 inches) between the top surface of the movable gripper latch tips and the opposing groove face of the drive rod. Prior to the start of the withdrawal sequence, the movable gripper coil is de-energized to open the moveable gripper latch arms. Then the withdrawal sequence is begun as following.

1. Movable gripper coil is de-energized

The movable gripper latch plunger moves down by the action of gravity and a spring force. Then, the moveable gripper latches are swung out of the drive rod groove by a linkage which connects the moveable gripper latch plunger and the moveable gripper latches. The drive rod is held by the stationary gripper latches only. This is the initial condition before a withdrawal or insertion sequence begins.

2. Moveable gripper coil is energized

The movable gripper latch plunger rises up and the moveable gripper latches are swung into a groove of the drive rod, actuated by the linkage connecting the movable gripper latch plunger and the movable gripper latches.

3. Stationary gripper coil is de-energized

The stationary gripper latch plunger moves down by spring force action and gravity. Then, the stationary gripper latches are swung out from the drive rod by linkage connecting the stationary gripper latch plunger and the stationary gripper latches. The moveable gripper latches support the drive rod load.

4. Lift coil is energized

The movable gripper pole rises up one step (5/8th inch), thus, lifting the drive rod/ RCCA one step (5/8th inch) out of the reactor core.

5. Stationary gripper coil is energized

The stationary gripper latch plunger rises up, the stationary grippe latches are swung into a drive rod groove and the stationary gripper latches lift the drive rods slightly, taking the load off the moveable gripper latches (approximately 0.032 inches). The drive rod load is transferred from the movable gripper latches to the stationary gripper latches.

6. Movable Gripper Coil is de-energized

The movable gripper latch plunger moves down by spring force and gravity, and the moveable gripper latches are swung out of engagement with the drive rod.

7. Lift coil is de-energized

The movable gripper pole goes down one step (5/8th inch) and is in position for the next latch-lift cycle.

The drive rod is continuously raised by the “stepping” sequence described above. When the desired “parking” or holding position is reached, the drive rod is stationary; held by the stationary gripper latches with the movable gripper coil energized. (A small gap exists between the moveable gripper latches and groove.)

3.9.4.1.3 Control Rod Insertion

The control rod insertion sequence is as follows:

With the drive rod in the “holding” condition (i.e., the stationary gripper latches engaged and holding, the movable gripper coil energized), the movable gripper latches in the groove with the small gap at the interface.

1. De-energize the movable gripper coil

The movable gripper latch plunger moves down and the movable gripper latches are swung out of the drive rod. The drive rod is held by the stationary gripper latches only. This is the condition before an insertion sequence.

2. Lift coil is energized

The movable gripper pole rises up one step (5/8th inch). The drive rod is held by the stationary gripper latches.

3. Movable gripper coil is energized

The movable gripper latch plunger rises up and the movable gripper latches are swung into a groove of the drive rod.

4. Stationary gripper coil is de-energized

The stationary gripper latch plunger returns down by spring force and gravity, and the stationary gripper latches are swung out from the groove of the drive rod. The movable gripper latches supports the drive rod load.

5. Lift coil is de-energized

The movable gripper pole goes down one step (5/8th inch) lowering the drive rod/RCCA down one step (5/8th inch) into the core.

6. Stationary gripper coil is energized

The stationary gripper latch plunger rises up. The stationary gripper latches are swung into a drive rod groove and the stationary gripper latches lift up the drive rod slightly (approximately 0.032 inches). The drive rod load transfers from the movable gripper latches to the stationary gripper latches.

7. Movable gripper coil is de-energized

The movable gripper latch plunger moves down and the movable gripper latches are swung out of engagement with the drive rod.

The drive rod is continuously lowered by the “stepping” sequence described above. When the desired rod insertion depth is reached, this holding position is maintained by the stationary gripper latches engaging the drive rod. The movable gripper coil is energized (with the small gap between latches and groove).

3.9.4.1.4 Holding and Tripping of the Control Rods

To maintain holding the control rods, both the movable gripper coil and the stationary gripper coil are energized. Thus, the movable gripper latches and the stationary gripper latches engage grooves of the drive rod, which is connected to the RCCA. At this moment, the drive rod load is supported by the stationary gripper latches while there is the small gap between the movable gripper latches and the drive rod groove. Leaving the

movable gripper coil energized is a back-up to hold the drive rod if the stationary gripper coil current is interrupted by some single failure.

To trip the control rods, the current is cut off to both the movable gripper and stationary gripper coils. The movable gripper and stationary gripper latches are swung out from engagement with the drive rod by spring force in the latch mechanisms and gravity, and without support, the RCCA will insert, causing a “scram.”

3.9.4.1.5 Testing Program

The test program of the CRDM is described in Subsection 3.9.4.4.

3.9.4.2 Applicable CRDS Design Specifications

According to 10 CFR 50.55a (Reference 3.9-29) and GDC 1, 2, 4, 14, and 29 requirements, the CRDM is designed, fabricated, and tested in accordance with quality standards commensurate with the safety functions to be performed so as to assure an extremely high probability of accomplishing the safety functions in the event of AOOs, postulated accidents, and natural phenomena, such as earthquakes.

The CRDM materials are discussed in Subsection 4.5.1. The rod position indicator is discussed in Subsection 7.7.1.4.

3.9.4.2.1 CRDM Functional Requirements

The functional requirements of the CRDM are as follows:

- Step length: 0.625 inch per step
- Maximum speed: 72 steps per minute (45 inches per minute)
- Travel length: 165.472 inches (nominal full steps at cold condition)
- Design drive line load: 374.8 pounds
- Trip delay time: Less than or equal to 0.15 seconds

  This is the response time of the latch mechanism (i.e., between when the coil current is cut off and the rod drop begins).

- Design life: 60 years
- Rapid RCCA insertion: Coil current is cut off to initiate dropping the RCCA and the drive rod. The RCCA and the drive rod are inserted by gravity.
- Design temperature for pressure housing and internal parts: 650°F
- Operating temperature for pressure housing and internals parts: 617°F
- Design pressure inside of pressure housing: 2,500 psia
- Operating pressure inside of pressure housing: 2,250 psia

- Design endurance criterion of the latch mechanism is six million steps, accommodating a margin for 60 years of operation (e.g., maintain stepping function).

The effect for the rod drop time, from starting rod drop at full withdrawal position to reaching 85% insertion stroke into the core, is evaluated by the calculated deflection of the CRDM pressure housing and test results, which is the basis of the deflection criteria of the CRDM pressure housing.

Discussion of the reactivity control function of the CRDS is described in Section 4.6 and Section 7.7.1.3.

3.9.4.2.2 Pressure Housing Requirements

The pressure housing consists of a rod travel housing and a latch housing; both are butt welded. The latch housing is butt welded to a penetration nozzle of the RV head. As stated in GDC 14, the butt welded design is known to have an extremely low probability of leakage.

The pressure housing is categorized as a Class 1 component in RG 1.26 (Reference 3.9-52), in that it constitutes a pressure boundary of the reactor primary coolant system. It is designed in accordance with requirements in 10 CFR 50.55a (Reference 3.9-29) and ASME Code, Section III (Reference 3.9-1), Subsection NB.

After the CRDMs are installed on the RV head, hydrostatic testing in accordance with ASME Code, Section III (Reference 3.9-1) is performed to verify the pressure boundary integrity. The material of the CRDM is described in Subsection 4.5.1.

3.9.4.2.3 Internal Component Requirements

The CRDM latch assemblies and the drive rod, (which connects with the RCCA), are classified as internal components.

The ASME Code requirements do not apply to non-pressurized components such as latch mechanism, the drive rod and the coil assembly. These non-pressurized components are classified as non-safety components. This is based upon having a gravity drop for coil mechanism or electric failure. If the coil assembly or electric device of the CRDM fails, the control rods are dropped/inserted into the core by gravity and reduce the reactivity. If the drive rod fails, the control rods drop into the core and reduce reactivity. The design, fabrication, inspection, and testing of the latch mechanism comes under the quality assurance requirement regarding safety components in 10 CFR 50.55a (Reference 3.9-29).

The latch mechanism is designed to operate in the temperature range between ambient temperature and plant operating temperature.

The drive rod assembly connects with the RCCA and is driven by the latch mechanisms which are non-pressure boundary components and, therefore, not ASME Code, Section III (Reference 3.9-1) limited. Failure of the drive rod by fracture, thereby, disconnecting the RCCA, leads to RCCA drop, with the resulting decrease in core reactivity, thus, the drive rod is not safety-related.

3.9.4.2.4 Coil Stack Assembly Requirements

The coil stack assembly is installed outside of the latch housing and is comprised of coil housings, an electrical conduit and connector, and three coils, whose design, fabrication, inspection and testing are not governed by the ASME Code, Section III (Reference 3.9-1).

The coil assembly rests on the ledge outside of the latch housing without mechanical connecting devices or welding.

The three coils are required to provide magnetic force to work latch assemblies. If the coils fail, there is then no magnetic force and the RCCA drops into the core, shutting down the reactor. Therefore, failure of the coils is not a related safety issue. Coils are fabricated, in adherence to standard industrial quality assurance standards, and not IEEE, Class 1E standards.

Temperature of the operating coils is maintained below 392°F by forced air cooling.

3.9.4.3 Design Loads, Stress Limits, and Allowable Deformations

The pressure housing is required to comply with ASME Code, Section III (Reference 3.9-1) Subsection NB. The pressure housing is evaluated under the load combinations prescribed by the code. The loading combination and stress limits are described in Subsection 3.9.3 and shown in Tables 3.9-9 and 3.9-10. This includes seismic loading. The allowable rod travel housing deflection during the seismic event is 1.18 inch, which will still allow the RCCA to be inserted into the core. This is quantified by analysis.

The clearances in the CRDM latch assembly, the latch arm, and the coil assembly are controlled to avoid a stuck rod condition. The thermal expansion of each part is evaluated to determine and ensure the clearances. This design is the same as L-106A, which reflects operationally-proven design and experience.

3.9.4.4 CRDS Operability Assurance Program

The functional performance of the CRDMs must be qualified both statically, as RCS pressure boundary components, and dynamically as functional mechanisms. To fulfill these requirements, performance assurance programs are provided.

The structural integrity as a RCS pressure boundary, is confirmed by stress analysis in accordance with ASME Code, Section III (Reference 3.9-1), Subsection NB. Also, a hydrostatic test, at ambient temperature, is performed in accordance with ASME Code, Section III (Reference 3.9-1), Subsection NB.

The capability of the CRDM functions, including withdrawal, insertion, and trip delay are confirmed by both lead unit tests and production unit tests to demonstrate that the design specification requirements are met prior to shipment. The lead unit testing is described as follows:

Lead unit test is performed on the first production unit of the applicable type of CRDM.

- Cold stepping test witih full design drive line load and maximum stepping speed (72 steps per minute).

  Criteria: no mis-stepping

- Trip delay time test at cold condition.

  Criteria: less than 0.15 seconds from coil current cut-off to the start of drive rod drop. This delay time can be estimated from the moveable gripper latch opening time during the insertion mode in the stepping test.

- Hot stepping test, with full design drive line load at maximum stepping speed (72 steps per minute).

  Criteria: no mis-stepping

- Trip delay time test at hot condition.

  Criteria: less than 0.15 seconds which is estimated from the moveable gripper latch opening time during the insertion mode in the stepping test.

Production tests are performed on all units before shipment. Test details are as follows:

- Cold stepping test at full design drive line load at maximum stepping speed (72 steps per minute).

  Criteria: no mis-stepping

- Cold trip delay time test at cold condition

  Criteria: less than 0.15 seconds from the coil current cut-off to the start of the rod drop which can be estimated from the moveable gripper latch opening time during the insertion mode in the stepping test.

On-site checks

- Visual inspection of the CRDM Pressure Housings, which contain the Latch Assemblies, upon receipt at the site to confirm no physical damage has occurred to the Shipping Container or to the Pressure Housings.

  Criteria: no harmful physical damage on the Shipping Center and the Pressure Housings

- The Coil Stack Assemblies are individually installed on the Latch Housing on-site using time-tested written assembly procedures.

  Criteria: installation in the right position

- Each Drive Rod is positioned and engaged with the associated RCCA following fuel loading using certified and proven installation procedures

  Criteria: installation in the right position

Preoperational tests

- Preoperational tests are performed on electrical systems such as the CRDM Motor Generator Set and the CRDM Control System, which are identified in Subsection 14.2.12.1.10 and 14.2.12.1.11. There are no preoperational test items on the CRDMs themselves.

Initial Startup Test

- The scram time, measured at 85% insertion stroke of the RCCA into the fuel assembly, is confirmed to be within specifications during initial start up tests. Start up testing is described in Chapter 14.

Post-Refueling Startup Test

- The stepping and the drop tests are performed as post-refueling startup tests. The criteria of this test are applicable to all CRDMs as described in Subsection 14.2. In addition, the stepping test is also performed in plant operation periodically, and the frequency is specified in Chapter 16.

3.9.5 Reactor Pressure Vessel Internals

This section discusses the US-APWR reactor internals design arrangements; design basis loading for all service conditions; the acceptance criteria of stresses and functional requirements; the computational methods used in the static mechanical and thermal analyses, dynamic analyses, vibration analyses, and computational flow analyses; the testing and alternate methods to confirm computational inputs to the design, the interface load and displacement criteria of the reactor internals and interfacing components; and preservice and inservice inspection plans.

The term “reactor internals” used in this subsection refers to the core support and internal structures and to all structural and mechanical elements inside the RV with the following exceptions:

- Reactor fuel elements and the reactivity control elements out to the coupling interface with the drive unit, except for the structural and interfacing aspects of the reactor fuel assemblies with the reactor internals, which are within the scope of this subsection.
- Control rod drive elements except for the guide tubes, which are within the scope of this subsection.
- In-core and thermocouple instrumentation except for the in-core instrumentation supports and thermocouple support structures which are within the scope of this subsection.

3.9.5.1 Design Arrangements

The reactor internals for the US-APWR can be divided into two major assemblies, the upper reactor internals assembly, and the lower reactor internals assembly. A separate part that is captured between the upper and lower reactor assembly flanges and provides

vertical pre-load and frictional restraint to the flanges is the reactor internals hold-down spring.

Figure 3.9-4 illustrates the reactor internals general assembly configuration. The figure illustrates the design arrangement of the reactor internals and the interfacing components such as the RV, fuel assembly, and incore nuclear instrumentation system (ICIS) thimble assembly.

The US-APWR is a four loop PWR plant with 257 fuel assemblies having 17 by 17 fuel rod arrays, with 14 foot active fuel length. The basic design of the US-APWR reactor internals evolved from the existing four loop plant technologies. Figure 3.9-4 shows that the vertical fuel assembly cavity is established by an upper core plate that compresses the fuel assembly hold-down springs and a lower core support plate that supports the fuel assemblies. Also shown is the ICIS thimble assembly and the detector guide thimbles that house the in-core movable detectors.

Figure 3.9-4 shows that the horizontal fuel assembly cavity is formed by the neutron reflector inside surface. The neutron reflector also shields the RV from excessive neutron fluence.

The materials to be used in the construction of the US-APWR reactor internals are discussed in DCD Subsection 4.5.2. The reactor internals are classified as core support structures, threaded structural fasteners, and internal structures. Although there are many reactor internals parts, there are only a few classified components designed as core support structures and threaded structural fasteners. The core support structures and threaded structural fasteners classified components are summarized below:

Core support structures and threaded structural fasteners:

- Upper Core Support Assembly
  - Upper core support plate, flange, and skirt cylinder
  - Upper core plate
  - Upper core plate fuel alignment pins
  - Upper support columns, and threaded structural fasteners
  - Upper core plate clevis and threaded structural fasteners
- Lower Core Support Assembly
  - Core barrel flange
  - Upper and lower core barrel
  - Lower core support plate
  - Radial support key and clevis

- Lower core support plate fuel alignment pins

The material of construction is mainly austenitic 304 stainless steel, which is selected for its resistance to corrosion from PWR water chemistry and its manufacturability (i.e., ease of welding and machining). The weld metal is 308 stainless steel. Strain hardened 316 stainless steel is the material of choice for the threaded structural fasteners because of its additional increased strength necessary for maintaining preload in a vibratory environment. Other materials such as Alloy X-750 used as an alternative for the guide tube support pins and nuts, and 403 stainless steel for the hold-down spring are selected for higher strength applications. Special materials such as a cobalt alloy hard-facing are applied to reduce material wear from vibration effects. All materials other than the cobalt alloy are controlled to a cobalt content not to exceed 0.2%.

3.9.5.1.1 Upper Reactor Internals Assembly Design Arrangement

Figure 3.9-5 shows the upper reactor internals assembly design arrangement. The major sub-assemblies of the upper reactor internals are the upper core support assembly, upper core plate assembly, upper support column assemblies, top slotted columns and mixing devices, guide tube assemblies, RV level instrumentation system assemblies, ICIS detector guide thimbles and thimble assemblies, and thermocouple conduit support column assemblies.

The upper core support assembly has an upper core support flange welded to the top of a cylindrical skirt. The upper core support flange has flow holes to allow cooling flow to enter into the RV head plenum. There are also slots in the flange that allow for guidance of the upper core support assembly during installation. These slots are engaged and guided by head and vessel alignment pins that are attached to the core barrel flange. Also, there are threaded roto-lock inserts in the upper core support flange for lifting of the upper support assembly. The cylindrical skirt is also welded at its bottom to the upper core support plate. There are holes in the upper support plate to allow installation of the lower guide tubes, and upper support columns. Each guide tube assembly is secured to the upper core support plate by hold-down bolts and each upper support column with a large nut.

For loads in the upward vertical direction, the upper core support assembly is vertically restrained by the RV head flange, and in the downward direction by the RV flange. A toroidal-shaped hold-down spring is sandwiched between the upper core support flange and the core barrel flange. The primary function of the hold-down spring is to accommodate the thermal expansion differences between the RV and the reactor internals upper core support flange and core barrel flange. A vertical preload in the hold-down spring is developed during installation of the upper internals and is controlled by a fixed distance between the bottom of the upper core support flange and the top of the core barrel flange. Vertical loads on the upper core support assembly come from dead weights less buoyant forces, upper core support and upper core plate differential pressure loads, vibration loads on the components, fuel assembly spring and lift loads, and seismic and postulated LOCA loads. There is a designed radial gap between the upper core support flange and the RV inside diameter. The gap is large enough to prevent contact from thermal expansion of the upper core support flange relative to the RV flange during operation. Horizontal loadings from flow loads, vibration loads, and seismic and pipe-rupture loads are transmitted from the upper core support flange to the RV head and

hold-down spring by friction or direct contact with the RV flange. Head and vessel alignment pins also transmit some of the horizontal loads to the RV head and RV flanges.

The vertical cavity between the upper core support and the upper core plate is dimensionally controlled by upper support columns that are fastened to the upper core plate at the bottom of the column and to the top of the upper core support by a single extended tube with a threaded nut that bears on the upper core support. Some upper support columns have either the detector guide thimbles or thermal couple conduits. In addition, there are several top slotted columns, and mixing devices on the periphery of the upper core plate. These columns are designed to provide a more uniform exit flow and temperature distribution to the outlet loop pipes. There are also two RV level instrumentation support tubes to measure the water level in the reactor vessel.

The upper core plate has circular flow holes for fuel assembly exit core flow. There are also circular flow holes for the exit core flow below the upper support columns and there are rectangular shaped holes for core exit flow into the guide tubes. Exit flow core pressure difference between the fuel assemblies is limited by the design to an acceptable cross-flow velocity to prevent vibratory damage to the fuel rods, thimbles, or RCCAs. The upper core plate has two fuel assembly pins for each fuel assembly that are shrink-fitted and provide guidance for the fuel assembly nozzles during refueling and installation. The fuel assembly pins also provide some horizontal restraint to the fuel assembly top nozzle. The upper core plate horizontal position, relative to the fuel assemblies, is controlled by a tight fit between the upper core plate clevis and the upper core plate guide pins. The upper core plate clevis and the upper core plate guide pins transmit horizontal loads during normal operation and during seismic and pipe rupture events. However, the upper core plate guide pins are limited in their load capacity, so that loads exceeding the capacity of the pins are transmitted by contact of the upper core plate rim with the core barrel inside diameter.

The guide tubes provide horizontal restraint and guidance to the control rods and drive rod assembly, as well as allow the parking of the drive rod during removal and installation after refueling. All guide tubes are designed for removal and replacement in the event they sustain damage during operation or refueling. The guide tubes have two main assemblies; an upper guide tube and a lower guide tube. The upper and lower guide tube flanges are fastened together by bolts threaded to the top of the upper core support plate. The lower guide tube is inserted through holes in the upper core support and restrained in the horizontal direction by a small clearance between the lower guide tube flange and upper core support plate hole. The bottom of the lower guide tube is fastened by two large support pins with flexible leaves that slide vertically with a small amount of friction force, but are horizontally preloaded against the upper core plate holes to prevent excessive vibration and wear. The upper and lower guide tubes have plates that guide the control rod spider during insertion and retraction of the RCCA. The lower guide tube has a continuous section of C-tubes and sheaths just above the upper core plate hole that avoids excessive vibrations of the RCCA due to the flow from fuel assemblies. The lower guide tube has “windows” to allow the flow to egress to the plenum between the upper core support and upper core plate. These layouts and dimensions of the lower guide tube are not changed from those of the existing 4-loop reactors. The upper guide tube is extended about 1 ft from that for the 12-ft core design, as like the 14-ft core reactors

existing in US. So the vibration characteristics of the RCCA guide tubes for the US-APWR are equivalent with those used in the existing plants.

The two reactor vessel (RV) level instrumentation support tubes that measure the water level in the reactor vessel are designed similar to the RCCA guide tubes in the vibration characteristics. Because both of the two RV level instrumentation support tubes are not located near the outlet nozzles, adverse flow from cross flow velocities are bounded by the RCCA guide tubes nearest the outlet nozzles. Also, the operating environment experience with similar RV level instrumentation support tubes in 4-loop plants gives confidence in the structural and functional design.

For the thermo-couple and ICIS, the upper core support columns are used as the guide structures in the upper plenum. These structures are similar to the upper support columns in the existing 4-loop reactor design.

The US-APWR upper core plate and its interface with the fuel assemblies, core barrel, upper support columns, and lower guide tubes are not different from those of the existing 4 loop design. So, there is little impact on the fiow-induced vibration due to the structural design changes around the upper core plate. More detail about the design differences between the US-APWR reactor internals and current 4 loop and effects on fiow-induced vibration are described in Chapter 2.1 of Reference 3.9-22.

3.9.5.1.2 Lower Reactor Internals Assembly Design Arrangement

Figure 3.9-6 shows the lower reactor internals assembly design arrangement. The major sub-assemblies of the lower reactor internals assembly are the core barrel assembly; the lower core support assembly; the neutron reflector assembly; irradiation specimen guide assembly; and the secondary core support assembly.

The core barrel assembly consists of a forged flange that is welded to the upper core barrel. The upper core barrel is welded to the lower core barrel. The core barrel flange has flow nozzles that are welded to the flange and provides a cooling flow from the RV annulus to the RV head plenum. Lifting of the core barrel assembly is accomplished by threading the lifting fixtures into the roto-lock inserts in the flange. The head and vessel alignment pins are bolted to the flange to provide guidance for the core barrel assembly during installation and removal. The head and vessel alignment pins are guided and aligned by slots in the RV and RV head. The flange has holes for access to the irradiation specimens. The upper core barrel has four welded core barrel outlet nozzles to provide an exit flow path to the RV outlet nozzles. In addition, four safety injection pads are attached to the core barrel to divert the safety injection flow from directly impinging on the barrel during a safety injection event. The lower core barrel receives the most neutron fluence from the core during normal operation. The lower core barrel has irradiation specimen guides that are fastened to the outside of the core barrel at specific locations.

The lower core support assembly consists of a lower core support plate, six radial support keys, and fuel alignment pins. The lower core support plate is welded to the lower core barrel. The lower core support plate has orificed flow holes to reduce mal-distribution of the flow into the core. Six radial keys are attached to the outside rim of the lower core support plate. These keys engage the RV clevis inserts. The keys and clevis inserts provide alignment during installation, resistance to vibration from flow, and transmit

asymmetric flow loads and dynamic loads from seismic and postulated LOCA forces to the reactor vessel. The lower core support plate supports the fuel assemblies and has two fuel alignment pins per fuel assembly for alignment and horizontal restraint of the bottom fuel nozzle. The fuel alignment pins are attached to the top of the lower core support plate and restrained by a locking device.

Figure 3.9-9 shows the neutron reflector assembly, which offers a significant reduction in the number of threaded fasteners, and an improvement in neutron reflectivity, from the design of currently operating PWR plants. The neutron reflector consists of multiple stacked ring blocks whichare mounted on the lower core support plate.

Vertical restraint for upward mechanical loads is provided by tie-rods and neutron reflector mounting bolts. The tie-rods are captured by a nut bearing on the top ring block. The tie-rods pass through holes in the blocks and are threaded into the lower core support plate. Fluence and temperature limits are also imposed on the tie-rods to preclude excessive loss of pre-load from irradiation relaxation. In addition, the bottom ring block is fastened directly to the lower core support plate by the mounting bolts. Ring blocks, excluding the bottom ring block, can be held down by their own weight in normal operating conditions, including design transients. During seismic and LOCA events, the lift-off displacement is restricted by the tie rods.

Ring block alignment pins between the stacked ring blocks provide horizontal alignment and shear restraint. The neutron reflector is aligned and attached to the core barrel by the upper and lower alignment pins. These alignment pins are inserted through the core barrel and guided into the clevises in the upper and lower flange of the neutron reflector, providing horizontal restraint for mechanical loads, similar to the upper core plate arrangement.

The inside surface of the ring blocks establishes the core cavity profile for the fuel assemblies. The small gaps between ring blocks are designed to be aligned with the fuel assembly grids. The ring blocks are carefully designed with cooling holes to assure that void swelling and distortion are minimized. Bypass cooling flow is directed into the bottom ring block from holes machined in the lower core support plate. The holes in the lower core support plate are also orificed to provide a pressure drop that minimizes the pressure difference between the core and the neutron reflector flow paths. The holes are also sized to prevent debris from entering or blocking the cooling holes in the ring blocks.

The irradiation specimen guides are fastened to the core barrel by long socket head cap screws (to accommodate bending). The specimen capsules inside the specimen guides are held in place by springs and a threaded cap. RV surveillance test specimens are periodically removed during plant lifetime for examination of RV neutron fluence embrittlement.

The secondary core support assembly consists of secondary core support columns, diffuser plate support columns, a base plate, and energy absorber system. The diffuser plates are bolted to the diffuser plate support columns and those columns are fastened to the bottom of the lower core support plate. The energy absorber and base plate are supported by columns that are bolted to the bottom of the lower core support plate. The energy absorber system and base plate have traditionally been used in PWR internals. Their purpose is to preclude overstressing the RV in the unlikely event of a failed core

barrel weld. The drop distance between the bottom of the base plate and the energy absorber system RV bottom is carefully controlled to minimize the impact load and stresses on the RV bottom head.

3.9.5.1.3 Jurisdictional Boundaries of the Reactor Internals

The jurisdictional boundaries between the core support structures, the internal structure, and the interfacing components such as the RV, CRDMs, fuel assemblies and thermocouple, and ICIS follow the guidance for boundaries of jurisdiction in the ASME Code, Section III (Reference 3.9-1), Subsection NG-1000. Figure 3.9-7 illustrates the boundaries of jurisdiction by the heavy black line between reactor internals and interfacing components.

The jurisdictional boundaries between the core support structures, threaded structural fasteners with the internal structures, and interfacing structures are summarized below:

- Core support structures and threaded structural fasteners boundary with the RV
  - Core barrel and upper core support flanges with the RV and RV head flanges.
  - The radial support key and clevis with the RV
- Core support structures and threaded structural fasteners boundary with the fuel assemblies
  - Bottom of the upper core plate with the fuel assembly
  - Top of the lower core support plate with the fuel assembly
  - Upper core plate fuel assembly alignment pins with the fuel assembly top nozzle holes
  - Lower core support plate fuel assembly alignment pins with the fuel assembly bottom nozzle holes
- Core support structures and threaded structural fasteners boundary with the ICIS
  - Upper core support column inside hole with the ICIS thimble
  - Upper core support with the in-core and thermocouple thimbles and conduit supports
- Core support structures and threaded structural fasteners boundary with the internal structures
  - Upper core support plate and threads with the lower guide tube flange and bolts
  - Upper core support flange and core barrel flange with the reactor internals hold-down spring
  - Core barrel flange with head and vessel alignment pins

- Core barrel flange with flow nozzles
- Lower core support plate with secondary core support columns and bolts
- Core barrel threads and irradiation specimen guide holder bolts
- Lower core support plate threads with the neutron reflector tie-rods
- Core barrel alignment pins with the neutron reflector clevis and bolts

• Internal structure boundary with the interface components

- Core barrel outlet nozzle with RV outlet nozzle
- Detector guide thimble with the in-core support housing plates
- Thermocouple conduits with the thermocouple supports
- Upper guide tube plates, lower guide tube guide plates, continuous section sheaths and C-tubes with the RCCA rodlets
- Upper guide tube top plate hole with the drive rod
- Parking button on the lower guide tube sheaths with the drive rod button for refueling
- Secondary core support base plate with the RV bottom head

3.9.5.2 Loading Conditions

The US-APWR reactor internals loading conditions, load combinations, and acceptance criteria, namely, the reactor internals design and service limits, and displacement limits are discussed below.

The loading conditions that are taken into account in designing the US-APWR reactor internals structures listed in Table 3.9-11 are summarized as follows:

- Pressure differences due to coolant flow
- Weight of the reactor internals
- Superimposed loads such as those due to other structures such as the reactor core (fuel assemblies), control rod assemblies; and ICIS and thermocouple instrumentation supports
- Earthquake loads or other loads which result from motion of the RV
- Reactions from restraints, supports, or both
- Thermal loads from reactor coolant flow, thermal transients, irradiation gamma heating, and differential thermal expansion

- Loads resulting from the impingement of flow or reactor coolant, or other contained or surrounding fluids
- Transient pressure difference loads, such as asymmetric blowdown loadings due to pipe ruptures at postulated locations
- Vibratory loads from flow induced vibration, and pump induced vibration
- Handling loads experienced in preparation for or during refueling or inservice inspection

3.9.5.2.1 Loading Combinations

All combinations of design and service loadings (e.g., operating differential pressure and thermal effects, potential adverse flow effects (flow-induced vibrations and acoustic resonances), seismic loads, and transient pressure loads of postulated LOCA) are accounted for in the design of the reactor internals. The distribution of the design and service loadings acting on the reactor internals components and structures are described below. Table 3.9-11 summarizes the loading combinations for the reactor internals. As an example of a loading combination for a loading condition, for the Level A loading condition, the loads to be combined are those loads marked with an X in the Level A column, unless otherwise indicated.

3.9.5.2.2 Design and Service Limits

The reactor internals loads are categorized according to the design and service loading conditions for the plant. Table 3.9-11 and Table 3.9-12 list the ASME Code, Section III (Reference 3.9-1) load combinations and service limits for core support structures and threaded structural fasteners, respectively.

Internal structure service limits are not addressed in the ASME Code, Section III (Reference 3.9-1). However, because of their importance to the safe operation of the reactor internals, the stress limits for core support structures are applied except for the secondary core support structures. The function of the secondary core support assemblies is to limit the stroke of the drop and the impact force on the lower vessel head in the postulated core drop event. Therefore, the design of the secondarv core support structures including the lower diffuser plate is determined by the impact force associated with the core drop event as a beyond-design basis accidents. The load combinations and stress limit for the secondary core support structures are shown in Table 3.9-15.

3.9.5.2.3 Interface Load and Displacement Limits

There are certain load and displacement limits for the reactor internals that affect the safety and operability of the interface components. These limits are summarized in Table 3.9-2.

3.9.5.3 Design Bases

The rules for materials, design, fabrication, examination, and preparation of reports for the manufacture and installation of the US-APWR core support structures and internal

structure follow those in Section III, Subsection NG of the ASME Boiler and Pressure and Vessel Code 2001 Edition up to and including 2003 Addenda (Reference 3.9-1).

The design basis for the operability of the US-APWR internals are listed below and discussed in detail under the following sections:

- Safety analysis
- Thermal-hydraulic performance
- Core loading pattern
- Environmental conditions including irradiation
- RCS transients
- Interface design requirements

3.9.5.3.1 Safety Analysis Design Basis

The safety analysis design requirements and limits for the US-APWR internals are as follows:

- Mal-distribution of flow to the core should be limited so as not impact core safety limits in Chapter 15.
- RCCA drop times or insertion during normal service conditions should not be adversely affected.
- RCCA are to be inserted without impediment after an unanticipated accident, or a seismic and postulated LOCA event.
- There should be no impediment of the reactor internals to the emergency core cooling flow after a seismic and postulated LOCA event.
- The impact load on the RV bottom head from a postulated core drop event should not adversely affect the integrity of the RV bottom head.
- The reactor internals are to provide fast neutron fluence protection to the RV to preclude excessive embrittlement.
- The water volume is to be monitored at all times.

3.9.5.3.2 Thermal-Hydraulics Design Basis

The reactor internals are to be designed for the following thermal-hydraulic performance parameters:

- The flow conditions are as follows:
  - Thermal design flow

- Best estimate flow
- Mechanical design flow
- Hot pump overspeed
- Hot functional testing

- Pressure drops across the reactor internals are to meet system requirements for all Level A and B service flow conditions.
- Bypass flow is to be minimized and must not exceed system requirements for normal operation.
- Distribution of main coolant inlet flow into the fuel assemblies during normal operation must meet fuel assembly core inlet requirements.
- Core outlet flows from the fuel assemblies are to be designed to minimize horizontal velocities that may contribute to vibration of the RCCA rodlets.
- Main coolant flow into the outlet piping during normal operation is to meet system requirements, specifically (1) to minimize exit fluid temperature striations, and (2) meet the velocity criteria to prevent erosion.
- Bulk temperature of the main coolant flow is not to exceed pressurized water saturation temperature.
- Fluid temperature increase in the bypass flow may be credited to the reactor power output.

A discussion of the reactor coolant flow path is described below.

The reactor coolant flow path for the reactor internals is depicted in Figure 3.9-8. Primary coolant flow at T_{cold} enters into the downcomer, the annular space between the RV inside wall, and the core barrel outside surface. The main coolant flow then enters the bottom of the RV and turns upward, flowing past the diffuser plates and distributing into the lower core support plate orifice holes. The orifices are carefully designed to control the flow into the fuel assemblies and to minimize uneven flow distributions and hot spots. Mal-distribution of flow into the core is limited by three design criteria. The first criterion is the minimum flow rate determined from the view point of thermal hydraulic design. The second criterion is the maximum fuel assembly inlet flow rate for the limit of the fuel assembly lift. And the third criterion is that the difference in inlet flow rates between adjacent fuel assemblies is determined to limit the cross-flow-induced vibration of the fuel rods. These design requirements are similar to those in the operating 4-loop plants. A confirmatory test was performed for US-APWR (Reference 1.5-3). From the test results, it is concluded that the core inlet flow distribution is sufficiently uniform to satisfy the design requirements mentioned above.

The coolant is heated in each fuel assembly to a fluid temperature depending on its core location in the core loading pattern. The hot assembly flow exits the fuel assemblies and enters the holes in the upper core plate. No fuel assembly exit temperature exceeds the

water saturation temperature. This is to preclude bulk-boiling in the main coolant flow. The upper core plate has two types of flow holes. One type is circular in shape and the other type is rectangular in shape. The circular shape is for open exit flow or exit flow below the upper support columns. The rectangular shape is for exit flow below the guide tubes. Most the main flow that enters the guide tube exits through “windows” into the upper plenum cavity. Some of the flow exits through controlled gap between the bottom of the guide tube flange and the top of the upper core plate. The guide tubes and support columns are carefully configured to minimize the pressure drop and cross-flow from the core exit fluid.

The main coolant flow then mixes in the upper plenum and exits from the core barrel outlet nozzles at an average fluid temperature of T_{hot}. Special flow columns are spaced on the periphery of the upper core plate near the core barrel outlet nozzles in order to improve mixing and minimize outlet fluid temperature mal-distribution.

Some percentage of the main coolant flow is bypass flow. The bypass flow is either for cooling metal or leakage between gaps. The bypass flows for cooling metal are as follows:

- Neutron reflector blocks and tie rods
- RV head

The bypass flows from gap leakages are as follows:

- Small gap between the core barrel outlet nozzle and RV outlet nozzle
- Gap between the neutron reflector ring block inside surface and the peripheral fuel assembly grids and nozzles
- Neutron reflector small gaps between the ring blocks

3.9.5.3.3 Core Loading Pattern and Axial Power Distribution Design Basis

The core loading pattern and the axial power distribution have a design impact on the reactor internals gamma heating, fluid temperatures, metal temperatures, and neutron fluence. The reactor internals that are affected by the core loading pattern and fluence are as follows:

- Core barrel
- Upper core plate
- Lower core support plate
- Neutron reflector ring blocks
- Neutron reflector ring block alignment pins
- Neutron reflector tie rods and mounting bolts

- Irradiation specimen guide and bolts

3.9.5.3.4 Environmental Conditions Design Basis

The environmental conditions that are addressed in the design of the reactor internals are from the following two sources:

- Water chemistry
- Fast neutron irradiation

The environmental effects of water chemistry on reactor internals materials are as follows:

- Corrosion
- Stress corrosion cracking
- Fatigue strength reduction

The fast neutron irradiation environmental effects on reactor internal materials are:

- Irradiation assisted stress corrosion cracking
- Irradiation stress relaxation
- Irradiation embrittlement
- Gamma heating
- Radiation exposure of the RV
- Void swelling

The environmental effects of corrosion and stress corrosion cracking of austenitic stainless steel materials in the reactor internals are generally not a concern based on experimental and operational experiences. Also fatigue strength degradation due to water chemistry conditions has likewise not been observed.

For conventional PWRs, the fast neutron effects resulting from irradiation assisted stress corrosion cracking have been shown to occur on former bolts of the baffle which attach in core region of reactor internals. However, the US-APWR uses a neutron reflector instead of the former baffle structure thus eliminating high stress bolts. Therefore, the potential for irradiation assisted stress corrosion cracking is very low.

Another environmental effect from fast neutron exposure on reactor internals is irradiation stress relaxation of threaded fasteners. The fasteners used near the core are identified in Figure 3.9-10 and have much smaller neutron doses than those on the neutron reflector tie rod. Tie rods restrain the US-APWR neutron reflector's vertical lift-off displacement during seismic and LOCA events and are made of strain hardened 316 stainless steel. Preloaded tension on the tie rod is reduced as a result of irradiation generated during normal plant operation. Because of this, the tie rod is designed to ensure that some

preload is left at the end of a 60 year plant life in order to ensure that its functional requirements are met. The neutron dose on the tie rod is comparable to that of the neutron reflector ring block and is minimized by locating the tie rods near the outside of the neutron reflector.

Irradiation embrittlement can cause a decrease in ductility and an increase in yield and ultimate strength over the design life of the plant. The amount of irradiation embrittlement is highly dependent on the fluence, metal temperature, and stress condition. For the materials selected for reactor internals, the reduction in ductility and the increase in yield and ultimate strength as well as the fatigue strength has not been shown to be an issue for the operating conditions of the US-APWR plant.

Gamma heating from fast neutron irradiation is accounted for in the design of the reactor internals.

The RV is subjected to fast neutron exposure. Protection from excessive fluence comes from (1) the water in the annulus between the core barrel outside diameter and the inside of the RV, and (2) the neutron reflector.

Void swelling from irradiation is a concern for materials with high dose rates. The neutron reflector ring blocks are subjected to high fluence dose rates and the ring blocks are cooled by flow inside cooling holes to minimize void swelling. This environmental issue is addressed for the US-APWR.

3.9.5.3.5 RCS Transient Design Basis

The RCS transient design basis is discussed in Subsection 3.9.1.1.

3.9.5.3.6 Reactor Internals Vibration Design Basis

The reactor internals vibration loads come from a dynamic computer model that inputs the pressure difference across components and the pump rotating speed and pump-induced vibration effects. The mechanical loads and displacements from the vibration analysis are used as input to the structural analysis of the reactor internals.

3.9.5.3.7 Seismic Design Basis

The seismic analysis methodology is based on static and dynamic mathematical models and uses general purpose FE computer code. Refer to Subsection 3.9.2.5 for further discussion on the seismic design basis.

3.9.5.3.8 LOCA Design Basis

The LOCA design basis input is discussed in Subsection 3.9.2.5.

3.9.5.3.9 Interface Components Design Basis

The interface components design basis are those design parameters and design requirements that affect the design of the core support and internal structures. The parameters and requirements for interface components such as the reactor vessel, fuel

assemblies, CRDM, and RCCA drive line system, thermocouple instrumentation, and ICIS are included in the design specification.

3.9.5.3.10 Reactor Internals Computational Methods and Verification of Input

Computational methods (e.g., the FE method) are used to determine stresses and displacements in the reactor internal components. Validation of the modeling includes the comparison of results with similar designs or testing for the natural frequencies, mode shapes, and frequency response functions with experimental or plant results.

3.9.5.3.11 Mechanical Design Criteria for the Reactor Internals

The mechanical design criteria for the reactor internals is included in the design specification.

3.9.5.3.12 PSI and ISI Plans

The PSI and ISI plans for the reactor internals is discussed below.

3.9.5.3.12.1 PSI Plan

The PSI plan follows the rules of ASME Code, Section XI (Reference 3.9-43). Visual inspection of parts subject to wear and galling are examined before and after hot functional testing. In addition, critical welds are also examined for any evidence of cracks.

3.9.5.3.12.2 ISI Plan

The ISI plan follows the rules of ASME Code, Section XI (Reference 3.9-43).

3.9.6 Functional Design, Qualification, and Inservice Testing Programs for Pumps, Valves, and Dynamic Restraints

This section describes the functional design and qualification provisions and inservice testing (IST) programs for certain safety-related pumps, valves, and dynamic restraints (i.e., those safety-related pumps, valves and dynamic restraints typically designated as Class 1, 2, or 3 under Section III of the ASME Code) to ensure that they will be in a state of operational readiness to perform their safety functions throughout the life of the plant.

The regulatory requirements associated with this subsection include 10 CFR 50.55a (Reference 3.9-29), 10 CFR 50, General Design Criteria (GDC) 1, 2, 4, 14, 15, 37, 40, 43, 46, 54, Appendix A (Reference 3.9-28), 10 CFR 50 Appendix B, 10 CFR 50.55a(c)-(e) (Reference 3.9-29), 10 CFR 50.55a(f) (Reference 3.9-29), 10 CFR 50.55a(b)(3)(ii) (Reference 3.9-29), 10 CFR 52.47(b)(1) (Reference 3.9-31), and 10 CFR 52.80(a) (Reference 3.9-32).

The US-APWR design for safety-related pumps, valves, and dynamic restraints designated as Class 1, 2, or 3 meets the GDC in the following respects:

- GDC 1 as it relates to pumps, valves, and dynamic restraints being designed, fabricated, tested, and inspected to quality standards commensurate with the importance of the safety functions to be performed. This is accomplished by using

recognized quality codes, standards, and design criteria that comply with the requirements of 10 CFR 50.55a.

- GDC 2 as it relates to pumps, valves, and dynamic restraints to withstand the effects of natural phenomena combined with the effects of normal and accident conditions. The safety-related SSCs are designed either to withstand the effects of natural phenomena without the loss of the capability to perform their safety functions, or are designed such that their response or failure will be in a safe condition. The nature and magnitude of the natural phenomena considered in the design of the plant are discussed in Chapter 2.

- GDC 4 as it relates to designing pumps, valves, and dynamic restraints to accommodate the effects of and to be compatible with the environment conditions associated with normal operation, maintenance, testing, and postulated accidents. The safety-related SSCs are designed to accommodate the effects of, and to be compatible with, the environmental conditions associated with the normal operation, maintenance, testing, and postulated accidents, including LOCAs. Criteria are presented in Chapter 3, and the environmental conditions are described in Section 3.11. These SSCs are adequately protected against dynamic effects, including the effects of missiles, pipe whipping, and discharging fluids, that may result from equipment failures and from events and conditions outside the nuclear power plant. Details of the design, environmental testing, and construction/fabrication of safety-related SSCs are provided in Chapters 3, 5, 6, 7, 8, 9, and 10. The leak-before-break (LBB) evaluation of Section 3.6 identifies the design requirements for the piping that are excluded from consideration of pipe rupture due to dynamic effects from postulated pipe failure accidents.

- GDC 14 as it relates to designing pumps, valves, and dynamic restraints that form the reactor coolant boundary so as to have an extremely low probability of abnormal leakage, rapidly propagating failure, and gross rupture. The RCPB is designed to accommodate the system pressures and temperatures attained under the expected modes of plant operation, including anticipated transients, with stresses within applicable limits. Consideration is given to loadings under normal operating conditions and to abnormal loadings, such as seismic loadings, as discussed in this chapter.

- GDC 15 as it relates to pumps, valves, and dynamic restraints that form the reactor coolant system being designed with sufficient margin to ensure that the design conditions are not exceeded. Steady state and transient analyses are performed to assure that RCS design conditions are not exceeded during normal operation. Additionally, RCPB components have a large margin of safety based on the application of proven materials and design codes, the use of proven fabrication techniques, the non-destructive shop testing, and the integrated hydrostatic testing of assembled components.

- GDC 37 as it relates to designing the emergency core cooling to permit periodic functional testing to ensure the leak tight integrity and performance of its active components. Preoperational performance tests of the ECCS components are performed by the manufacturer. Initial system hydrostatic and functional flow tests demonstrate structural and leak-tight integrity of components and proper

functioning of the system. Thereafter, periodic tests demonstrate that components are functioning properly.

- GDC 40 as it relates to designing periodic functional testing of the containment heat removal system to ensure the leak tight integrity and performance of its active components. The CSS is designed to permit periodic testing to assure the structural and leak-tight integrity of CSS components and to assure the operability and performance of the active components of the system. All active components of the CSS, including the delivery piping up to the last powered valve before the spray nozzle, have the capability to be tested during reactor power operation. A minimum flow path return to the pump suction line is used for pump tests during normal operation. Full flow pump performance testing is conducted during plant shutdown conditions.

- GDC 43 as it relates to designing the containment atmospheric cleanup systems to permit periodic functional testing to ensure the leak tight integrity and the performance of the active components. The discussion of GDC 40 demonstrates the testability, and therefore, the operability and performance of the CSS.

- GDC 46 as it relates to designing the cooling water system to permit periodic functional testing to ensure the leak tight integrity and performance of the active components. The CCWS and the ESWS operate continuously during normal plant operation and shutdown, under flow and pressure conditions that approximate accident conditions. These operations demonstrate the operability, performance, and structural and leak-tight integrity of all cooling water system components.

- GDC 54 as it relates to designing piping systems penetrating containment with the capability to test periodically the operability of the isolation valves and determine valve leakage acceptability. Piping that penetrates the containment has been equipped with test connections and test vents or has other provisions to allow periodic leak-rate testing to assure that leakage is within the acceptable limit as defined by the technical specifications of Chapter 16, which are consistent with 10 CFR 50, Appendix J (Reference 3.1-13), as described in Chapter 6.

Other DCD sections that interface with this section are:

- Section 3.2.2 addresses the classification system and quality group for pumps and valves.

- Section 3.9.2 addresses dynamic testing and analysis of safety-related pumps, valves, and snubbers.

- Section 3.9.3 addresses the structural design of safety-related pumps, valves, and snubbers.

- Section 3.10 addresses the seismic and dynamic qualification of safety-related pumps and valves.

- Section 3.11 addresses the environmental qualification of safety-related pumps and valves.

- Section 3.12 addresses the design and leak testing provisions of pressure retaining systems and components that interface with the reactor coolant system as part of the primary review responsibility for intersystem loss-of-coolant accidents.
- Section 3.13 addresses programs for ensuring bolting and threaded fastener adequacy and integrity.
- Section 5.2.2 addresses the valves specified for overpressure protection of the reactor coolant pressure boundary.
- Section 5.4.7 and Section 6.3 address residual heat remove and emergency core cooling systems piping, respectively that is connected to the reactor coolant system and is subject to thermally stratified flow, thermal striping, and/or thermal cyclic effects.
- Section 6.2.1.2 addresses the analyses of subcompartment differential pressures resulting from postulated pipe breaks.
- Section 9.2.1 and 9.2.2 address surveillance, testing, inspection, and maintenance programs of essential service water and component cooling systems.
- Section 10.3 addresses the number and size of valves specified for the main steam supple system.
- Section 14.2 addresses preoperational and initial startup testing for systems that contain safety-related pumps, valves, and dynamic restraints.
- Section 17.6 describes the program for implementation of the Maintenance Rule for systems that contain safety-related pumps, valves, and dynamic restraints.

ASME Code, Section III, Class 1, 2 and 3 safety-related pumps, valves and dynamic restraints that are required to perform a specific function in shutting down the reactor to a safe-shutdown condition, in maintaining the safe-shutdown condition, or in mitigating the consequence of an accident, are subjected to IST to assess and verify operational readiness as set forth in 10 CFR 50.55a(f) (Reference 3.9-29) and ASME OM Code (Reference 3.9-13). The US-APWR will be designed to allow accessibility for the performance of IST activities for safety-related pumps, valves, and dynamic restraints.

The pumps covered in the IST Program are those pumps that are provided with an emergency power source and required to perform a specific function in shutting down a reactor to a safe-shutdown condition, in maintaining the safe-shutdown condition, or in mitigating the consequence of an accident.

The US-APWR utilizes the ASME OM Code, 2004 Edition through the 2006 Addenda (or the optional ASME Code Cases listed in NRC RG 1.192 that is incorporated by reference in paragraph (b) of 10 CFR 50.55a, subject to the applicable limitations and modifications) (Reference 3.9-13) for developing the IST Program for ASME Code, Section III, Class 1, 2 and 3 safety-related pumps, valves and dynamic restraints. The COL Applicant is to

administratively control the IST program for pumps, valves and dynamic restraints and to control the ASME OM Code edition and addenda to be used for the IST program.

It should be noted that the requirements of system pressure test per ASME Code, Section XI, Section IWA 5000 (Reference 3.9-43) that verify the system pressure boundary integrity are part of the ISI Program and are not part of this IST Program.

As required by 10 CFR 50.55a(f) (Reference 3.9-29), ASME Code, Section III, Class 1, 2 and 3 safety-related pumps, valves and dynamic restraints are incorporated into a 120-month interval IST Program that is in compliance with the requirements of the latest edition and addenda of the OM Code 12 months before initial fuel load. The requirements for the IST Program are included in Technical Specification Subsection 5.5.8 of Section 5.5, Programs and Manuals.

The IST Program is also used for the required preservice (base line) testing of ASME Code, Section III, Class 1, 2, and 3 safety-related pumps, valves and dynamic restraints.

Relief requests from any of the applicable ASME OM Code test requirements are documented in the IST Program, including justification and proposed alternative of test(s)/examination(s) that assess operation readiness of the impacted pumps, valves, or dynamic restraints.

3.9.6.1 Functional Design and Qualification of Pumps, Valves, and Dynamic Restraints

- The functional design and qualification of safety-related pumps, valves, and dynamic restraints (snubbers) is to be performed in accordance with ASME QME-1-2007, “Qualification of Active Mechanical Equipment Used in Nuclear Power Plants” (Reference 3.9-66), as endorsed in RG 1.100, Revision 3, “Seismic Qualification of Electrical and Active Mechanical Equipment and Functional Qualification of Active Mechanical Equipment for Nuclear Power Plants” (Reference 3.9-16).

The functional design and qualification of safety-related pumps, valves, and snubbers includes the following:

- Safety-related pump, valve, and piping designs include provisions to allow testing of pumps and valves at the maximum flow specified in the plant accident analyses.

- Functional design and qualification of each safety-related pump and valve is performed such that each pump and valve is capable of performing its intended function for a full range of system differential pressure and flow, ambient temperatures, and available voltage (as applicable) under conditions ranging from normal operating to design-basis accident.

- The US-APWR design provides ready access to SSC to facilitate comprehensive testing using currently available equipment and techniques. Accessibility incorporated into the design complies with the requirements of the ASME OM Code and 10 CFR 50.55a(f). System design incorporates provisions, including

alternate flow paths and required instrumentation, to allow full flow testing of pumps under the IST program. The design also incorporates provisions to permit ready IST of valves.

- The provisions for the design and qualification of snubbers are provided in Section 3.9.3. Snubbers in safety-related systems include provisions to allow access for IST program activities.
- The design and installation of safety and relief valves is described in Section 3.9.3.
- The seismic and dynamic qualification of mechanical and electrical equipment is described in Section 3.10.
- Section 3.11 addresses the environmental qualification of safety-related pumps and valves.
- Safety-related valves that are part of the RCPB are designed and tested such that these valves will not experience any abnormal leakage, or increase in leakage, from their loading.
- Pumps, valves, and snubbers are designed with sufficient margin to demonstrate that the design conditions are not exceeded.
- Pump motors are designed to tolerate anticipated frequency and voltage variations due to degraded electrical power supply line conditions.

For procured equipment, the design and acceptance criteria for the equipment functional qualification are required to be specified in the purchase specifications which are part of the purchase order. The applicable level of quality assurance and documentation is also required to be specified. The vendor is required to submit a qualification plan/procedure for review and approval prior to performing the test and/or analysis, as required. Submittal of existing documentation is acceptable if documentation is provided correlating the existing data with the requirements in the purchase order. The vendor is to submit the final qualification documentation, in the form of an equipment qualification report (EQR), for review and approval prior to acceptance of the equipment. The EQR is to contain the information identified in Section 3.9.6.1, as required, to confirm that the qualification of the equipment meets the purchase specifications.

3.9.6.2 IST Program for Pumps

IST of pumps is performed to determine the operational readiness of safety-related pumps in conformance with the requirements of ASME OM Code subsections ISTA and ISTB. Pumps that are ASME Code Section III, Class 1, 2, and 3, are included in the program. The pumps covered in the IST Program are those pumps that are provided with an emergency power source and required to perform a specific function in shutting down a reactor to a safe-shutdown condition, in maintaining the safe-shutdown condition, or in mitigating the consequence of an accident. The IST Program does not include any non-safety-related pumps since these pumps do not perform safety-related functions.

The OM Code identifies four types of tests, including preservice, Group A, Group B, and comprehensive tests. All pumps receive a preservice test followed on a quarterly basis by the test associated with the pump category (Group A test for Group A pumps, and Group B test for Group B pumps), and at least once every 2 years by a comprehensive test. A comprehensive test may also be substituted for a Group A or Group B test. Similarly, a Group A test may be substituted for a Group B test, and a preservice test may be substituted for any inservice test.

Table 3.9-13 provides a listing of the safety-related pumps in the IST Program including tag number, description, pump-type, group, required tests (flow, differential pressure, inlet pressure, vibration, speed), test frequency, and acceptance criteria. The allowable range for test parameters shall be those specified in the ASME OM Code, except where specific relief is granted.

Instruments will meet the requirements specified in the ASME OM Code, subsection ISTB-3500, consistent with the guidance in NUREG-1482, except where specific relief is granted.

Test results are compared to the established and accepted preservice reference values, including the use of instrument range and accuracy.

Relief from the requirements for testing, if required, and the alternative to the tests are justified and documented in Table 3.9-13.

The COL Applicant is to provide the site-specific, safety-related pump IST parameters and frequency.

3.9.6.3 IST Program for Valves

Safety-related valves, including actuating and position indicating systems, are subject to operational readiness testing in conformance with the requirements of the ASME OM Code, subsections ISTA and ISTC. The valves that are subject to IST include those valves that perform a specific function in shutting down the reactor to a safe-shutdown condition, in maintaining a safe-shutdown condition, or in mitigating the consequences of an accident. Safe-shutdown conditions are discussed in Subsection 7.4.1. In addition, pressure relief devices used for protecting systems or portions of systems that perform a function in shutting down the reactor to a safe-shutdown condition, in maintaining a safe-shutdown condition, or in mitigating the consequences of an accident, are subject to IST.

Valves (including relief valves) subject to IST are indicated in Table 3.9-14. This table includes the type of testing to be performed and the frequency at which the testing should be performed. The guidance in NRC Generic Letters, and industry and utility guidelines (including NRC Generic Letters 89-04 and 96-05, Reference 3.9-53 and 3.9-54) is considered in developing the test program. Inservice testing incorporates the use of non-intrusive techniques to periodically assess degradation and performance of selected valves (e.g., MOVs).

Safety-related check valves with an active function are exercised in response to flow. Safety-related POVs with an active function are subject to an exercise test and an

operability test. The operability test may be either a static or a dynamic (flow and differential pressure) test.

Relief from the requirements for testing, if needed, and the alternative to the tests are justified and documented in Table 3.9-14.

The COL Applicant is to provide type of testing and frequency of site-specific valves subject to IST in accordance with the ASME Code.

Valve Functions Tested

The IST Program identifies the specific safety-related valve function(s). The identified safety valve function listed in Table 3.9-14, is a single or a combination of safety functions of the following:

- Maintained in closed position (passive valve)
- Maintained in open position (passive valve)
- Change to safety closed position (active valve)
- Change to safety open position (active valve)
- Change to safety throttle flow position (active valve)

Based on the safety-related functions identified for each valve, the IST is to assess the operability readiness of the valve to perform its intended safety function. Active valves include valves that change position to open, change position to closed and/or have a throttling function. Active valves, which are required to change position to perform their safety function as defined in the ASME OM Code, include valves that change obturator (the part of the valve that blocks the flow stream) position to accomplish a safety-related function(s). Valve function to maintain closed position is designated as passive valve, however, it is required to be included in the IST Program and functionally tested in accordance with the ASME OM Code requirements.

If upon removal of the actuation power (electrical power, air or fluid for actuation) an active valve fails to the position associated with performing its safety-related function, it is identified as “active-to-fail” in Table 3.9-14.

Valve categories are used in determining the type of IST in accordance with the ASME OM Code. These valves function to include but are not limited to:

- Active or active-to-fail for fulfillment of the safety-related function(s)
- RCS pressure boundary isolation function
- Containment isolation function
- Seat leakage (in the closed position), is limited to a specific maximum amount when important for fulfillment of the safety-related function(s)

- Actuators that fail to a specific position (open/closed) upon loss of actuating power for fulfillment of the safety-related function(s)
- Safety-related remote position indication

The ASME IST categories are assigned based on the safety-related valve functions and the valve characteristics. The following criteria are used in assigning the valves IST categories in accordance with the ASME OM Code.

- Category A – safety-related valves with safety-related seat leakage requirements
- Category B – safety-related valves requiring IST, but without safety-related seat leakage requirements
- Category C – safety-related, self-actuated valves (such as check valves and pressure relief valves)
- Category D – safety-related, explosively actuated valves and non-reclosing pressure relief devices

Additionally, valves that are included in the IST Program that have position indication are observed locally during valve exercising to verify proper operation of the position indication. The frequency for this position indication test is in accordance with ASME OM Code. Where local observation is not practicable (such as solenoid valves), other methods are used for verification of valve position indicator operation.

3.9.6.3.1 IST Program for MOVs

IST of ASME Section III Class 1, 2, and 3, and safety-related motor-operated valves (MOVs) is performed in accordance with the ASME OM Code (Reference 3.9-13) and applicable addenda, as required by 10 CFR 50.55a(f) and 10 CFR 50.55a(b)(3)(ii) (Reference 3.9-29). 10 CFR 50.55a(b)(3)(ii) requires the establishment of a program to periodically verify that safety-related MOVs continue to be capable of performing their design basis safety functions. The IST Program incorporates ASME Code Case OMN-1 (Reference 3.9-67). ASME OM Code Case OMN-1, “Alternative Rules for Preservice and Inservice Testing of Certain Motor-Operated Valve Assemblies in Light-Water Reactor Power Plants,” allows the use of MOV diagnostic testing as an alternative to stroke time testing and position indication verification for certain motor operated valves. Use of this Code Case is authorized by Regulartory Guide 1.192, “Operation and Maintenance Code Case Acceptability, ASME OM Code” (Reference 3.9-44). This Regulatory Guide lists ASME OM Code Cases determined acceptable for use in IST Programs by the NRC. The Regulatory Guide is incorporated by reference in the Code of Federal Regulations 10 CFR 50.55a(b). The Code Case is listed in Table 2 of this Regulatory Guide as a conditionally approved Code Case. A conditionally approved Code Case may be used without request to the NRC provided it is used with any identified limitations or modifications. The stipulations listed in Table 2 include the following:

- The adequacy of the diagnostic test interval for each motor-operated valve (MOV) must be evaluated and adjusted as necessary but not later than 5 years of three refueling outages (whichever is longer) from initial implementation of OMN-1.

- When extending exercise test intervals for high risk MOVs beyond a quarterly frequency, ensure that the potential increase of Core Damage Frequency (CDF) and risk associated with the extension is small and consistent with the intent of the Commission's Safety Goal Policy Statement.

- When applying risk insights, MOVs must be categorized according to their safety significance using the methodology described in Code Case OMN-3 or use other MOV risk ranking methodologies accepted by the NRC on a plant specific or industry-wide basis.

The IST Program for MOVs also incorporates the guidance of NUREG-1482 (Reference 3.9-60).

Testing is required except where specific relief has been granted by the NRC. In addition to the above, MOVs are inservice tested in accordance with the requirements of Generic Letter 96-05 (Reference 3.9-54) to permit periodic assessment of valve operability at the prescribed frequency. Generic Letter 96-05 supersedes Generic Letter 89-10 (Reference 3.9-55) and its supplements with regard to MOV periodic performance verification. The MOV Program implements the Joint Owners Group MOV Periodic Verification Program, MPR 2524-A (November 2006) (Reference 3.9-61),as accepted in the NRC Safety Evaluation dated September 25, 2006 and its Supplement dated September 18, 2008 (Reference 3.9-68).

The MOV testing program requires either in-plant valve operation or prototype valve testing at system flow and pressure, or system differential pressure to verify correct MOV actuator sizing and control settings. This MOV periodic verification program addresses the various requirements, such as, maximum torque and thrust, margins for degraded conditions, degraded voltage, control switch repeatability, load sensitive MOV behavior, etc. The available motor output is determined based on motor capabilities at design basis conditions. These conditions include, rated motor start torque; minimum voltage conditions; elevated ambient temperature conditions; and operator efficiency.

Testing also includes remote position-indications tests, leakage tests, and exercise tests. Valves with position indicators that are included in the IST program are observed locally during valve exercising to verify that the indicators are operating correctly. Safety-related valves with seat leakage limits are tested to verify that leakage does not exceed allowable limits. This testing includes valves that isolate piping and lines that penetrate containment; these valves are tested in accordance with 10 CFR 50, Appendix J. Most valves are tested individually as a part of the Type C testing, depending on the valve function and configuration. Safety-related MOVs are exercised periodically, and generally undergo full-stroke exercise testing quarterly. Measuring stroke time is not a separate inservice test, but is done as part of periodic testing. If it is impractical to exercise a valve during plant operation, the valve may be full-stroke tested during cold shutdowns. Valves that operate during normal plant operation and at a frequency that satisfies exercising requirements need not be additionally exercised, provided that IST-required observations are made at intervals no greater than that specified in the IST Program.

Retesting MOVs to verify functionality is required after valve or valve-actuator maintenance. The extent of retesting depends upon the type of maintenance performed. MOV testing is incorporated into the initial plant startup test program (refer to Section

14.2). Containment isolation valve (CIV) leak rate test frequency is addressed in Section 6.2.6.

Acceptance criteria for successful completion of the IST of MOVs includes the following:

- Consistent with the safety function, the valve fully opens and/or the valve fully closes or both. Diagnostic equipment indicates hard seat contact.
- The testing demonstrates adequate margin with respect to the design basis, including consideration of diagnostic equipment inaccuracies, degraded voltage, control switch repeatability, load sensitive MOV behavior, and margin for degradation
- The maximum torque and/or thrust (as applicable) achieved by the MOV, allowing sufficient margin for diagnostic equipment inaccuracies and control switch repeatability, does not exceed the allowable structural and undervoltage motor capability limits for the individual parts of the MOV.

Valves that fail to meet their respective acceptance criteria are declared inoperable.

Prior to power operation, a design basis verification test is performed on each active MOV to verify the capability of each valve to meet its safety-related design basis requirements. The test is performed at conditions that are as close to design basis conditions as practicable. The test results are used along with valve preservice tests to develop the initial (periodic verification) testing frequency for each active MOV.

The preservice test program for MOVs is conducted in accordance with the ASME OM Code (Reference 3.9-13), ISTC 3100, under conditions as near as practical to those expected during subsequent IST. The interval between testing to demonstrate continued design basis capability does not exceed five years or three refueling outages, whichever is longer.

In some cases, the valves are tested on a less frequent basis since it is not practicable to exercise the valve during plant operation. If an exception is taken to performing ASME OM Code test frequency such as full-stroke exercise testing of a valve, then full-stroke testing is performed during cold shutdown condition on a frequency that is not more often than required by the ASME OM Code (Reference 3.9-13). If testing is not practicable during plant shutdown condition, then the full-stroke testing is performed during refueling outage. The inservice operability testing of some MOVs rely on non-intrusive diagnostic techniques to permit periodic assessment of valve operability at design basis conditions.

The IST program is to identify MOVs that require non-intrusive diagnostic testing techniques. The specified frequency of testing using operability of non-intrusive diagnostic techniques is a maximum of once every 10 years. The initial test frequency is the longest of every three refueling cycles or five years, until sufficient data exists to determine a longer test frequency is appropriate, in accordance Code Case OMN-1 (Reference 3.9-67) with GL 96-05 (Reference 3.9-54).

3.9.6.3.2 IST Program for POVs Other Than MOVs

ASME Code, Section III, Class 1, 2 and 3 safety-related POVs (air operated, hydraulic operated, solenoid operated, and others) are subject to operational readiness testing in accordance with the requirements stated in the ASME OM Code. IST of valves assesses operational readiness including actuating, stroke timing, fail safe, and verification of position indicating systems. The ability of power-operated valves to perform their design-basis functions is verified either before installation or as part of preoperational testing performed during the initial plant startup test program, as described in Section 14.2.

Although the design basis capability of active safety-related power-operated valves is verified as part of the design and qualification process, power-operated valves that perform an active safety function are tested again after installation in the plant as required, to ensure valve setup is acceptable to perform their required functions, consistent with valve qualification. These tests, which are typically performed under static (no flow or pressure) conditions, also document the baseline performance of the valves to support maintenance and trending programs. During the testing, critical parameters needed to ensure proper valve setup are measured. Depending on the valve and actuator type, these parameters include seat load, running torque or thrust, valve travel, actuator spring rate, bench set and regulator supply pressure. Uncertainties associated with performance of these tests and use of the test results (including those associated with measurement equipment and potential degradation mechanisms) are addressed appropriately. Uncertainties are considered in the specification of acceptable valve setup parameters or in the interpretation of the test results (or a combination of both). Uncertainties affecting both valve function and structural limits are addressed. Installed solenoid-operated valves are tested using Class 1E electrical power supply voltage and current to verify they remain capable of performing their required safety function during design-basis accident conditions.

Additional testing is performed as part of the air-operated valve (AOV) program, which includes the key elements for an AOV Program as identified in the Joint Owners Group Air Operated Valve Program Document, (Reference 3.9-62) and the Comments on Joint Owners' Group Air Operated Program Document (Reference 3.9-63). The AOV program incorporates the attributes for a successful POV long-term periodic verification program, as discussed in RIS 2000-03, Resolution of Generic Safety Issue 158: Performance of Safety-related Power-Operated Valves Under Design Basis Conditions, (Reference 3.9-64), by incorporating lessons learned from previous nuclear power plant operations and research programs as they apply to the periodic testing of AOVs and other POVs included in the IST program. Key lessons learned that are addressed in the AOV program include:

- Valves are categorized according to their safety significance and risk ranking.
- Setpoints for AOVs are defined based on current vendor information or valve qualification diagnostic testing, such that the valve is capable of performing its design-basis function(s).
- Periodic static testing is performed to identify potential degradation, unless those valves are periodically cycled during normal plant operation under conditions that meet or exceed the worst case operating conditions within the licensing basis of

the plant for the valve, which would provide adequate periodic demonstration of AOV capability. If required based on valve qualification or operating experience, periodic dynamic testing is performed to re-verify the capability of the valve to perform its required functions.

- Sufficient diagnostics are used to collect relevant data (e.g., valve stem thrust and torque, fluid pressure and temperature, stroke time, operating and/or control air pressure, etc.) to verify the valve meets the functional requirements of the qualification specification. Solenoid operated valves are verified, to the extent practical, to be capable of performing their safety functions for the electrical power supply amperage and voltage at design basis extremes. Test frequency is specified, and is evaluated each refueling outage based on data trends as a result of testing. Frequency for periodic testing is in accordance with References 3.9-62 and 3.9-63, with a minimum of 5 years (or 3 refueling cycles) of data collected and evaluated before extending test intervals. Post-maintenance procedures include appropriate instructions and criteria to ensure baseline testing is re-performed as necessary when maintenance on the valve, valve repair or replacement, have the potential to affect valve functional performance.

- Guidance is included to address lessons learned from other valve programs in procedures and training specific to the AOV program.

- Documentation from AOV testing, including maintenance records and records from the corrective action program are retained and periodically evaluated as a part of the AOV program.

The attributes of the AOV testing program described above, to the extent that they apply to and can be implemented on other safety-related POVs, such as electro-hydraulic valves, are applied to those other POVs.

POVs other than active MOVs are exercised quarterly in accordance with ASME OM ISTC. Active and passive POVs upon which operability testing is performed are identified in Table 3.9-14.

3.9.6.3.3 IST Program for Check Valves

Safety-related check valves identified with specific safety-related functions to open and/or to close are tested periodically. Exercising a check valve confirms the valve capability to move to the position(s) to fulfill the safety-related function(s). Check valve testing requires verification that obturator movement is in the direction required for the valve to perform its safety function. For check valves that perform a safety function in the open and closed directions, the valve is tested by initiating flow and observing whether or not the obturator moves to the full-open position. During flow conditions, the obturator moves to and maintains contact with the backseat without fluctuating, while allowing the flowrate and maximum differential pressure across the valve to remain within acceptable design limits for the system. When flow ceases or reverses, the obturator moves to the valve seat to fulfill the test requirements.

For valves that have a safety function in only the open direction, the valve is exercised by initiating flow and observing whether or not the obturator moves to the full-open position.

Check valves that have a safety function in only the closed direction are exercised by initiating flow and observing whether or not the obturator moves to at least the partially open position. When flow ceases or reverses, the obturator moves to the valve seat. The US-APWR design incorporates provisions to permit safety-related check valves to be tested for performance in both the forward and reverse flow directions. Check valve testing includes observations of a direct indicator or other positive means, such as changes in system pressure, flowrate, level, temperature, seat leakage, testing, or nonintrusive testing results. Acceptance criteria for this testing consider the specific system design and valve application. For example, a valve's safety function may require obturator movement in both open and closed directions. A mechanical exerciser may be used to operate a check valve for testing. Where a mechanical exerciser is used, acceptance criteria are provided for the force or torque required to move the check valve's obturator. Exercise tests also detect missing, sticking, or binding obturators.

As noted in Subsection ISTC-5221 of the ASME OM Code, if these test methods are impractical, or if sufficient flow cannot be achieved or verified, a sample disassembly examination program verifies valve obturator movement. In accordance with Subsection ISTC-5221 of the ASME OM Code and the guidance of NUREG-1482, the sample disassembly examination program groups check valves by category of similar design (manufacturer, size, model number and materials), application, and service condition, including valve orientation, and requires a periodic examination of one valve from each group.

During the disassembly process, the full-stroke motion of the obturator is verified and verification is performed that the internals of the valve are structurally sound (i.e., no loose or corroded parts). Also, if the disassembly is to verify the full-stroke capability of the valve, the disk is manually exercised. While the valve is in a partially disassembled condition the valve internals are inspected and the condition of the moving parts evaluated. Nondestructive examination is performed on the hinge pin to assess wear, and seat contact surfaces are examined to verify adequate contact. Full- stroke motion of the obturator is re-verified immediately prior to completing reassembly. At least one valve from each group is disassembled and examined at each refueling outage, and the valves in each group are disassembled and examined at least once every eight years. A condition monitoring program may be established to modify testing or disassembly inspection periods when sufficient operating data have been collected for a valve type. The condition monitoring program is prescribed by post- maintenance program or ASME OM Code Appendix II requirements for each equipment type. Before returning to service, valves disassembled for examination or valves that received maintenance that could affect their performance are exercised with a full or part stroke. Details and bases of the sampling program are documented and recorded in the test plan.

When operating conditions, valve design, valve location, or other considerations prevent direct observation or measurements by use of conventional methods to determine adequate check valve function, diagnostic equipment and nonintrusive techniques are used to monitor internal conditions. Nonintrusive techniques include acoustic, ultrasonic, magnetic, and x-ray technologies, that are used to measure valve- operating parameters (e.g., fluid flow, disk position, disk movement, and disk impact forces). Nonintrusive techniques also detect valve degradation. Diagnostic equipment and techniques used for valve operability determinations are verified as effective and accurate under the

preservice test program. Testing is performed to the extent practical under normal operation, cold shutdown, or refueling conditions applicable to each check valve. Testing includes effects created by sudden starting or stopping of pumps, if applicable, or other conditions, such as flow reversal. When maintenance that could affect valve performance is performed on a valve in the IST program, post-maintenance testing is conducted prior to returning the valve to service.

Preoperational testing is performed during the initial test program (refer to Section 14.2) to verify that valves are installed in a configuration that allows correct operation, testing, and maintenance. Preoperational testing verifies that piping design features accommodate check valve testing requirements. Tests also verify disk movement to and from the seat and determine, without disassembly, that the valve disk positions correctly, fully opens or fully closes as expected, and remains stable in the open position under the full spectrum of system design-basis fluid flow conditions. Additional information on leak rate testing is provided in Section 6.2.6.

Valves that normally operate at a frequency that satisfies the exercising requirement need not be additionally exercised, provided that the observations required of IST are made and recorded at intervals no greater than that specified in this section.

The ASME OM Code specifies a quarterly check valve exercise frequency. In some cases, check valves are tested on a less frequent basis because it is not practical to exercise the valve during plant operation. If an exception is taken to performing quarterly exercise testing, then exercise testing is performed during cold shutdown on a frequency not more often than quarterly. If this is not practical, the exercise testing is performed during each refueling outage. If exercise testing during a refueling outage is not practical, then an alternative means is provided. Alternative means include non-intrusive diagnostic techniques or valve disassembly and inspection. Non-intrusive methods may include monitoring an upstream pressure indicator, monitoring tank level, performing a leak test, a system hydrostatic, or pressure test, or radiography.

Check Valve Disassembly and Inspection

The IST Program identifies which valves require periodic valve disassembly and inspection, and the frequency of inspection is documented in Table 3.9-14.

3.9.6.3.4 Pressure Isolation Valve Leak Testing

Safety-related valves with seat leakage limits are tested to verify their seat leakage. These valves include RCS Isolation Valves - valves that provide isolation of piping that interface with the RCS and other safety systems.

The ASME Code, Section XI (Reference 3.9-43) specifies a test frequency of at least once every two years. The ASME Code, Section XI does not require additional leak testing for valves that demonstrate operability during the course of plant operation. In such cases, the acceptability of the valve performance is recorded during plant operation to satisfy IST requirements. Therefore, a specific IST need not be performed on valves that meet this criterion.

The maximum leakage requirement for pressure isolation valves (PIVs) that provide isolation between high and low pressure systems is included in the surveillance requirements for Technical Specification 3.4.14. The PIVs that require leakage testing are tabulated in Table 3.9-14.

3.9.6.3.5 Containment Isolation Valve Leak Testing

Containment isolation valves that provide isolation for piping systems that penetrate the containment are tested in accordance with 10 CFR 50, Appendix J (Reference 3.9-56). Depending on the function and configuration, some valves are tested during the integrated leak rate testing (Type A), test individually as a part of the 10 CFR 50, Appendix J, Type C testing, or both. The leak rate test frequency for a containment isolation valve is defined in Subsection 6.2.4. The provisions in 10 CFR 50.55a(b)2 (Reference 3.9-29) requires leakage limits and corrective actions for individual containment isolation valves where corrective actions are required by reference to ASME OM Code (Reference 3.9-13). The IST program plan as defined in Subsection 3.9.6.3, identifies scope, exceptions and changes in accordance with 10 CFR 50, Appendix J (Reference 3.9-56).

3.9.6.3.6 IST Program for Safety and Relief Valves

Pressure relief devices that provide a safety-related function in shutting down the reactor, in mitigating the consequence of an accident, and/or in protecting equipment in systems that perform a safety-related function, are tested in accordance with ASME OM Code for IST. The ISTs for these valves are identified ASME OM Code, Appendix I.

The periodic IST includes visual inspection, seat tightness determination, set pressure determination, and operational determination of balancing devices, alarms, and position indication as appropriate. The frequency for this IST is every five years for ASME Code, Section III, Class 1 (Reference 3.9-1) and main steam line safety valve, or every 10 years for ASME Code, Section III, Classes 2 and 3 devices. Twenty percent of the valves from each valve group are tested within any 24-month interval for Class 1 and main steam line safety valve, and within any 48-month interval for Class 2 and 3 devices. Non-reclosing pressure relief devices, if existing, are inspected when installed and replaced every five years unless historical data indicate a requirement for more frequent replacements.

3.9.6.3.7 IST Program for Manually Operated Valves

Safety-related active manually operated valves are identified in the IST Program, and exercised periodically in accordance with frequency and requirements specified in the ASME OM Code.

3.9.6.3.8 IST Program for Explosively Activated Valves

Not applicable to US-APWR design.

3.9.6.4 IST Program for Dynamic Restraints

As described in Subsection 3.12.6.6, dynamic restraints within piping systems is to be minimized as-much-as-possible due to the maintenance and testing requirements for these components. However, dynamic restraints in the form of snubber supports are

utilized where free thermal movements are required and restraining movements caused by dynamic loadings is also required. Snubber operability inspections and tests including scope and frequency requirements are specified and controlled in the components support inspection and testing program plan. The ASME OM Code (Reference 3.9-13) provides ISI methods and requirements for examinations and tests of snubbers at nuclear power plants. Preservice and inservice examinations must be performed using the VT-3 visual examination method described in IWA-2213 of the ASME Code, Section XI, 1995 Edition through the 2003 Addenda (Reference 3.9-43).

The program plan for IST of dynamic restraints includes the location of snubbers in safety-related systems and components, the snubber type (hydraulic or mechanical), applicable standard, and function (shock, vibration, or dual-purpose snubber). While the ASME Code, Section III (Reference 3.9-1), Subsection NF does not require fatigue evaluations for shock snubbers, fatigue strength of the snubber is to be evaluated for dual-purpose or vibration arrester snubber types.

The snubber is selected to satisfy the system design requirements. The snubber design and operating information form the basis for snubber examination and testing requirements. The following subsections describe these requirements which comply with the ASME OM Code (Reference 3.9-13).

3.9.6.4.1 Design and Operating Information

The selection of snubbers involves a process of matching design requirements with manufacturer recommendations for performance limitations. Snubber installations are in accordance with the design requirements and manufacturers instructions, including settings for hot and cold conditions. The selection criteria of the snubber are determined through an iterative process of comparing the snubber's spring constant with the spring constant for a given load capacity modeled in the piping system. Additional piping system analyses are performed as necessary until the values coincide for the installed and modeled snubber load capacities and spring constants. The final settings of the snubber are determined by the thermal movement of the pipe at the snubber location, and snubber direction. These settings must assure that the pipe thermal movements at the snubber location and direction are within the boundaries of the total travel of the snubber, for all operating conditions of the piping system.

Design and operating information provide the input for the performance of the IST program. Items recommended for use include:

a. Snubber operation and maintenance instructions including parts list.

b. Design drawings showing snubber rating, location, orientation, pin-to-pin dimensions, and hot and cold settings.

c. Procurement specifications.

d. Snubber qualification and acceptance test results.

e. Snubber application reports.

f. Desired reservoir fluid level as a function of piston location and spatial orientation.

g. Correlation of activation velocity, acceleration, and release rate at normal test temperatures to the range of operating temperatures expected.

h. Method for measuring the position setting.

i. Required fluid and seal material specification.

j. Limiting environmental conditions affecting service.

k. Drag force for each size and type of snubber furnished.

l. Correlation of hydraulic snubber release rate at various loads and the acceleration limiting value of mechanical snubbers at various loads to justify testing at less than rated loads.

3.9.6.4.2 Preservice Examination Requirements

A preservice examination in accordance with the ASME OM Code (Reference 3.9-13) is performed on all snubbers after placing the systems in service prior to initial plant operation. The initial visual examination verifies, as a minimum:

a. No visible sign of damage or impaired operational readiness exist.

b. Snubber load rating, location, orientation, position setting, and configuration are in accordance with design drawings and specifications.

c. Adequate swing clearance is provided to allow snubber movement.

d. Fluid is at the recommended level, and fluid is not leaking from the snubber system, if applicable.

e. Structural connections, such as welds, pins, bearings, studs, fasteners, lock nuts, tabs, wire, and cotter pins, are installed correctly.

The functional preservice testing of the snubber examines the thermal movement through incremental movement verification, swing clearance, and total movement verification in accordance with the ASME OM Code (Reference 3.9-13) Sections ISTD-4131 through ISTD-4133. Snubbers that fail the functional test requirements are re-installed correctly, adjusted, repaired, or replaced until such time the requirements are satisfied.

Preservice operational readiness testing, which may be performed at the manufacturer's facility, verify the following attributes as specified in ASME OM Code (Reference 3.9-13) Section ISTD-5100:

a. Activation is within the specified range of velocity or acceleration in tension and in compression.

b. Release rate, when applicable, is within the specified range in tension and in compression. For units specifically required not to displace under continuous load, the ability of the snubber to withstand load without displacement.

c. For mechanical snubbers, drag force is within specified limits in tension and in compression.

d. For hydraulic snubbers, if required to verify proper assembly, drag force is within specified limits in tension and in compression.

3.9.6.4.3 Inservice Examination Requirements

External characteristics are visually examined on the required schedule and evaluated to determine their operational readiness in accordance with the ASME OM Code (Reference 3.9-13) Section ISTD-4200.

The initial examination interval of snubbers begins no sooner than 2 months after attaining 5% reactor power operation, and is completed by the end of the first refueling outage. Subsequent examination intervals begin at the end of the previous examination interval, and conclude at the end of the next refueling outage. The duration of examination intervals following the completion of the second refueling outage is in accordance with Table ISTD-4252-1 of the ASME OM Code. Snubbers determined to be unacceptable at any time during the interval, based on the visual examination acceptance criteria, shall be counted in determining the subsequent examination interval in accordance with Table ISTD-4252-1.

Snubbers are tested for operational readiness during each fuel cycle. Tests in accordance with a specified sampling plan are performed during normal system operation, or during system or plant outages. Snubber operational readiness tests verify that:

a. Activation is within the specified range of velocity or acceleration in tension and in compression.

b. Release rate, when applicable, is within the specified range in tension and in compression. For units specifically required not to displace under continuous load, the ability of the snubber to withstand load without displacement.

c. Drag force, when applicable, is within specified limits in tension and in compression.

Snubbers are tested in their as-found condition (without preconditioning) regarding the parameters to be tested to the fullest extent practicable. Snubbers may be tested in their installed location by using Owner-approved test methods and equipment, or removed and bench tested, in accordance with Owner-approved procedures. Snubbers that do not meet test requirements are evaluated to determine the cause of the failure. Unacceptable snubbers are adjusted, repaired, modified, or replaced.

3.9.6.4.4 Service Life Monitoring

The initial snubber service life is predicted based on manufacturer's recommendations or design review. Methods for predicting service life are given in Nonmandatory Appendix F of the ASME OM Code (Reference 3.9-13).

Service life is evaluated at least once each fuel load cycle, and increased or decreased, if warranted. The evaluation is based upon technical data from representative snubbers that have been in service in the plant, or other information related to service life. If the evaluation indicates that service life will be exceeded before the next scheduled system or plant outage, one of the following actions are taken:

a. The snubber is replaced with a snubber for which the service life will not be exceeded before the next scheduled system or plant outage.

b. Technical justification is documented for extending the service life to or beyond the next scheduled system or plant outage.

c. The snubber is reconditioned such that its service life will be extended to or beyond the next scheduled system or plant outage.

3.9.6.5 Relief Request and Authorization to ASME OM Code

Considerable experience has been used in designing and locating pumps, valves, and dynamic restraints to permit preservice and IST required by ASME OM Code. Deferral of testing to cold shutdown or refueling outages in conformance with the rules of the ASME OM Code (Reference 3.9-13), since during power operation it is not practical, is not considered a relief request. Relief from the testing requirements of the ASME OM Code will be requested when full compliance with requirement of the ASME OM Code is not practical. In such cases, the information provided should include the following:

(1) identification of the component by name, number, functions, class under Section III of the ASME Code, valve category (as defined in ISTC-1033 of the ASME OM Code), and pump group (as defined in ISTB-2000 of the ASME OM Code)

(2) identification of the ASME OM Code requirement(s) from which the applicant is requesting relief or to which the applicants is requesting an alternative

(3) for a relief request pursuant to 10 CFR 50.55a(f)(6)(I) or (g)(6)(I), the basis for requesting the relief and an explanation of why compliance with the ASME OM Code is impractical or should otherwise not be required

(4) for an alternative request pursuant to 10 CFR 50.55a(a)(3), details regarding the proposed alternative(s) demonstrating that (1) the proposed IST will provide an acceptable level of quality and safety, or (2) compliance with the specified requirement would result in hardship or unusual difficulty without a compensating increase in the level of quality and safety

(5) description of the plan, including milestones, for implementing the proposed IST program

3.9.7 [Reserved]

3.9.8 [Reserved]

3.9.9 Combined License Information

COL 3.9(1) *The COL Applicant is to assure snubber functionality in harsh service conditions, including snubber materials (e.g., lubricants, hydraulic fluids, seals).*

COL 3.9(2) *The first COL Applicant is to complete the vibration assessment program, including the vibration test results, consistent with guidance of RG 1.20. Subsequent COL Applicant need only provide information in accordance with the applicable portion of position C.3 of RG 1.20 for Non-Prototype internals.*

COL 3.9(3) *Deleted*

COL 3.9(4) *Deleted*

COL 3.9(5) *Deleted*

COL 3.9(6) *The COL Applicant is to provide the program for IST of dynamic restraints in accordance with the ASME OM Code.*

COL 3.9(7) *Deleted*

COL 3.9(8) *The COL Applicant is to administratively control the edition and addenda to be used for the IST program and to provide a full description of their IST program for pumps, valves, and dynamic restraints.*

COL 3.9(9) *Deleted*

COL 3.9(10) *The COL Applicant is to identify the site-specific active pumps.*

COL 3.9(11) *The COL Applicant is to provide site-specific, safety-related pump IST parameters and frequency.*

COL 3.9(12) *The COL Applicant is to provide type of testing and frequency of site-specific valves subject to IST in accordance with the ASME Code.*

3.9.10 References

3.9-1 Nuclear Power Plant Components, ASME Boiler and Pressure Vessel Code. Section III, Division 1, American Society of Mechanical Engineers. Includes: NCA, NB, NC, ND, NF, NG, Code Cases and Appendices including Appendix I, F, and N, 2001 edition thru 2003 Addenda[4].

3.9-2 Nuclear Safety Criteria for the Design of Stationary Pressurized Water Reactor Plants, ANS N5.1.1-1983, American Nuclear Society.

3.9-3 Thermal Stresses in Piping Connected to Reactor Coolant Systems, Generic Communications. Bulletin No. 88-08, U.S. Nuclear Regulatory Commission, Washington, DC, June 22, 1988, including Supplements 1, 2, and 3, dated: June 24, 1988; August 4, 1988; and April 11, 1989.

3.9-4 Pressurizer Surge Line Thermal Stratification. Generic Communications, Bulletin No. 88-11, U.S. Nuclear Regulatory Commission, Washington, DC, December 20, 1988.

3.9-5 Fracture Toughness Requirements, Domestic Licensing of Production and Utilization Facilities, Energy. Title 10, Code of Federal Regulations, Part 50, Appendix G, U.S. Nuclear Regulatory Commission, Washington, DC.

3.9-6 Abaqus, Finite Element Structural Analysis Program, Version 6.7, SIMULIA, Providence, RI.

3.9-7 ANSYS, Finite Element Structural Analysis Program, Release 11.0, ANSYS, Inc, Canonsburg, PA, 2007, ANSYS, Finite Element Structural Analysis Program, Release 12.1, ANSYS, Inc., Canonsburg, PA, 2009.

3.9-8 RELAP-5, Transient Hydraulic Analysis Program, MOD 3.2, Idaho National Engineering and Environmental Laboratory, Idaho Falls, ID.

3.9-9 MULTIFLEX, A FORTRAN-IV Computer Program for Analyzing Thermal-Hydraulic-Structure System Dynamics. WCAP-8708 (proprietary), and WCAP-8709 (nonproprietary), September 1977.

3.9-10 NASTRAN, Femap with NX NASTRAN, Version 9.3.

3.9-11 Deleted

3.9-12 Initial Test Programs for Water-Cooled Nuclear Power Plant. Regulatory Guide 1.68, Rev. 3, U.S. Nuclear Regulatory Commission, Washington, DC, March 2007.

3.9-13 Code for Operation and Maintenance of Nuclear Power Plants. American Society of Mechanical Engineers (ASME OM Code), 2004 Edition through 2006 Addenda.

3.9-14 Code for Pressure Piping, Power Piping. ANSI B31.1, 2004 Edition, American Society of Mechanical Engineers.

3.9-15 Deleted

4. As for the RCL piping the 1992 Edition including 1992 Addenda will be used for ASME Code Section III NB-3200,NB-3600 analyses in accordance with the requirements of 10 CFR 50.55a(b)(1)(iii) except for analyzing equation factor for fillet welds. Stress indices for ASME Class 1 piping analyses will use the 1989 Edition of ASME Code Section III, Division 1, Subsection NB.

3.9-16 Seismic Qualification of Electrical and Active Mechanical Equipment and Functional Qualification of Active Mechanical Equipment for Nuclear Power Plants. Regulatory Guide 1.100, Rev. 3, U.S. Nuclear Regulatory Commission, Washington, DC, September 2009.

3.9-17 Policy, Technical, and Licensing Issues Pertaining to Evolutionary and Advanced Light-Water Reactor (ALWR) Designs. SECY-93-087, April 2, 1993 ; SRM-93-087 issued on July 21, 1993.

3.9-18 Combining Modal Responses and Spatial Components in Seismic Response Analysis. Regulatory Guide 1.92, Rev. 2, U.S. Nuclear Regulatory Commission, Washington, DC, July 2006.

3.9-19 Combining Modal Responses and Spatial Components in Seismic Response Analysis. Regulatory Guide 1.92, Rev. 1, U.S. Nuclear Regulatory Commission, Washington, DC, February 1976.

3.9-20 Damping Values for Seismic Design of Nuclear Power Plants. Regulatory Guide 1.61, Rev. 1, U.S. Nuclear Regulatory Commission, Washington, DC, March 2007.

3.9-21 Preoperational Vibration Assessment Program for Reactor Internals During Preoperational and Initial Startup Testing. Regulatory Guide 1.20, Rev. 3, U.S. Nuclear Regulatory Commission, Washington, DC, March 2007.

3.9-22 Comprehensive Vibration Assessment Program for US-APWR Reactor Internals, MUAP-07027 (R1) Mitsubishi Heavy Industries, May 2009.

3.9-23 Au Yang, M.K. and Connelly, W.H. A Computerized Method for Flow-Induced Random Vibration Analysis of Nuclear Reactor Internals. Nuclear Engineering and Design 42, 1977, pp 277-263.

3.9-24 APWR Reactor Internals 1/5-Scale Model Flow Test Report. MUAP-07023 Rev. 1 (Proprietary) and MUAP-07023 Rev. 1 (Non-Proprietary), May 2009.

3.9-25 Dynamic Testing and Analysis of Systems, Structures, and Components, Standard Review Plan for the Review of Safety Analysis Reports for Nuclear Power Plants. NUREG-0800, SRP 3.9.2, Rev. 3, U.S. Nuclear Regulatory Commission, Washington, DC, March 2007.

3.9-26 Design Response Spectra for Seismic Design of Nuclear Power Plants. Regulatory Guide 1.60, Rev. 1, U.S. Nuclear Regulatory Commission, Washington, DC, December 1973.

3.9-27 Stress Limits for ASME Class 1, 2, and 3 Components and Component Supports, and Core Support Structures Under Specified Service Loading Combinations. Standard Review Plan for the Review of Safety Analysis Reports for Nuclear Power Plants. NUREG-0800 SRP Section 3.9.3 and Appendix A to SRP 3.9.3, Rev. 2, U.S. Nuclear Regulatory Commission, Washington, DC, March 2007.

3.9-28 General Design Criteria for Nuclear Power Plants, Domestic Licensing of Production and Utilization Facilities, Energy. Title 10, Code of Federal Regulations, Part 50, Appendix A, U.S. Nuclear Regulatory Commission, Washington, DC.

3.9-29 Codes and Standards, Domestic Licensing of Production and Utilization Facilities, Energy. Title 10, Code of Federal Regulations, Part 50.55a, U.S. Nuclear Regulatory Commission, Washington, DC.

3.9-30 Early Site Permits; Standard Design Certifications; and Combined Licenses for Nuclear Power Plants, Energy. Title 10, Code of Federal Regulations, Part 52, U.S. Nuclear Regulatory Commission, Washington, DC.

3.9-31 Contents of Applications, Early Site Permits; Standard Design Certifications; and Combined Licenses for Nuclear Power Plants, Energy. Title 10, Code of Federal Regulations, Part 52.47(b)(1), U.S. Nuclear Regulatory Commission, Washington, DC.

3.9-32 Issuance of Combined Licenses, Early Site Permits; Standard Design Certifications; and Combined Licenses for Nuclear Power Plants, Energy. Title 10, Code of Federal Regulations, Part 52.80(a), U.S. Nuclear Regulatory Commission, Washington, DC.

3.9-33 Earthquake Engineering Criteria for Nuclear Power Plants, Domestic Licensing of Production and Utilization Facilities, Energy. Title 10, Code of Federal Regulations, Part 50, Appendix S, U.S. Nuclear Regulatory Commission, Washington, DC.

3.9-34 IEEE Recommended Practice for Seismic Qualification of Class 1E Equipment for Nuclear Power Generating Stations, IEEE Std. 344-2004, Institute of Electrical and Electronics Engineers Power Engineering Society, New York, New York, June 2005.

3.9-35 Plant Design for Protection Against Postulated Piping Failures in Fluid Systems Outside Containment, Standard Review Plan for the Review of Safety Analysis Reports for Nuclear Power Plants. NUREG-0800, SRP 3.6.1, Rev. 3, U.S. Nuclear Regulatory Commission, Washington, DC, March 2007.

3.9-36 Determination of Rupture Locations and Dynamic Effects Associated with the Postulated Rupture of Piping, Standard Review Plan for the Review of Safety Analysis Reports for Nuclear Power Plants. NUREG-0800, SRP 3.6.2, Rev.2, US Nuclear Regulatory Commission, Washington, DC, March 2007.

3.9-37 Evaluation of Potential Pipe Breaks, NUREG-1061, Vol. 3, U.S. Nuclear Regulatory Commission Piping Review Committee, November 1984.

3.9-38 Guidelines for Evaluating Fatigue Analyses incorporating the Life Reduction of Metal Components Due to the Effects of the Light Water Reactor Environment for New Reactors. Regulatory Guide 1.207, Rev. 0, U.S. Nuclear Regulatory Commission, Washington, DC, March 2007.

3.9-39 Nuclear Facilities-Steel Safety-Related Structures for Design, Fabrication and Erection. (1994 edition), ANSI/AISC N690, American National Standards Institute/American Nuclear Society.

3.9-40 Manual of Steel Construction. American Institute of Steel Construction, 9th Edition, 1989.

3.9-41 Service Limits and Loading Combinations for Class 1 Linear-Type Component Supports. Regulatory Guide 1.124, Rev. 2, US Nuclear Regulatory Commission, Washington, DC, February 2007.

3.9-42 Service Limits and Loading Combinations for Class 1 Plate-and-Shell-Type Component Supports. Regulatory Guide 1.130, Rev.2, U.S. Nuclear Regulatory Commission, Washington, DC, March 2007.

3.9-43 Rules for Inservice Inspection of Nuclear Power Plant Components, ASME Boiler and Pressure Vessel Code. ASME Section XI, 1995 Edition through the 2003 Addenda, American Society of Mechanical Engineers

3.9-44 Operation and Maintenance Code Case Acceptability, ASME OM Code, Regulatory Guide 1.192, US Nuclear Regulatory Commission, Washington, DC, June 2003.

3.9-45 Requirements for Extending Snubber Inservice Visual Examination Interval at LWR Power Plants, American Society of Mechanical Engineers (ASME) Code Case OMN-13, Rev.0, 2000.

3.9-46 Technical Evaluation of Generic Issue 113: Dynamic Qualification and Testing of Large Bore Hydraulic Snubbers, NUREG/CR-5416, Nitzel, M.E.; Ware, A.G. EG&G Idaho Inc.; Page J.D. NRC; September 1992 (EGG-2571).

3.9-47 Deleted

3.9-48 Deleted

3.9-49 Threaded Fasteners – ASME Code Class 1, 2, and 3, Design of Structures, Components, Equipment, and Systems, Standard Review Plan for the Review of Safety Analysis Reports for Nuclear Power Plants. NUREG-0800, SRP 3.13, Rev.0, U.S. Nuclear Regulatory Commission, Washington, DC, June 1996.

3.9-50 Code Requirements for Nuclear Safety-Related Concrete Structures (ACI 349-06) and Commentary, American Concrete Institute, 2006.

3.9-51 Anchoring Components and Structural Supports in Concrete. Regulatory Guide 1.199, Rev. 0, U.S. Nuclear Regulatory Commission, Washington, DC, November 2003.

3.9-52 Quality Group Classifications and Standards for Water-, Steam-, and Radioactive-Waste-Containing Components of Nuclear Power Plants.

Regulatory Guide 1.26 Rev. 4, U.S. Nuclear Regulatory Commission, Washington, DC, March 2007.

3.9-53 Guidance on Developing Acceptable Inservice Testing Program, GL 89-04, U.S. Nuclear Regulatory Commission, Washington, DC, April, 1989.

3.9-54 Periodic Verification of Design Basis Capability of Safety-Related Motor-Operated Valves, GL 96-05, U.S. Nuclear Regulatory Commission, Washington, DC, September, 1996.

3.9-55 Safety-Related Motor-Operated Valves, Testing and Surveillance, GL 89-10, U.S. Nuclear Regulatory Commission, Washington, DC, June 1989.

3.9-56 Primary Reactor Containment Leakage Testing for Water-Cooled Power Reactors, Domestic Licensing of Production and Utilization Facilities, Energy. Title 10, Code of Federal Regulations, Part 50, Appendix J, U.S. Nuclear Regulatory Commission, Washington, DC.

3.9-57 Summary of Design Transient, MUAP-09001, Rev. 0 (Proprietary) and MUAP-09001, Rev. 0 (Non-Proprietary), February 2009.

3.9-58 Summary of Seismic and Accident Load Conditions for Primary Components and Piping, MUAP-09002, Rev. 1 (Proprietary) and MUAP-09002, Rev. 1 (Non-Proprietary), March 2009.

3.9-59 Deleted.

3.9-60 Guidelines for Inservice Testing at Nuclear Power Plants, NUREG-1482, U.S. Nuclear Regulatory Commission, Washington, DC, April 1995.

3.9-61 MOV Periodic Verification (PV) Study, MPR 2524-A, Joint Owners Group (JOG), November 2006.

3.9-62 Joint Owners Group Air Operated Valve Program Document, Revision 1, December 13, 2000.

3.9-63 Comments on Joint Owners' Group Air Operated Valve Program Document, USNRC Letter from Eugene V. Imbro to Mr. David J. Modeen, Nuclear Energy Institute, October 8, 1999.

3.9-64 Resolution of Generic Safety Issue 158: Performance of Safety-Related Power-Operated Valves Under Design Basis Conditions, Regulatory Issue Summary RIS 2000-03, U.S. Nuclear Regulatory Commission, Washington, DC, March 15, 2000.

3.9-65 GOTHIC, Containment Analysis Package User Manual. Version 7.2a (QA), NAI 8907-02, Rev. 17, Numerical Applications Inc., Richmond, WA, January 2006.

3.9-66 Qualification of Active Mechanical Equipment Used in Nuclear Power Plants. American Society of Mechanical Engineers (ASME) QME-1-2007.

3.9-67 Alternative Rules for Preservice and Inservice Testing of Certain Motor-Operated Valve Assemblies in Light-Water Reactor Power Plants, American Society of Mechanical Engineers (ASME) Code Case OMN-1, Rev. 0, 1999.

3.9-68 Final Safety Evaluation on Joint Owner's Group Program on Motor-Operated Valve Periodic Verification. U.S. Nuclear Regulatory Commission,Washington, DC. September 25, 2006, with its supplement dated September 18,2008.

3.9-69 US-APWR RCCA Insertion Limit Load Test Report, MUAP-11012 Rev. 0 (Proprietary) and MUAP-11012 Rev. 0 (Non-Proprietary), Mitsubishi Heavy Industries, Ltd., March 2011.

Table 3.9-1 RCS Design Transients (Sheet 1 of 2)

Event	Cycles
Level A Service Conditions	
RCP startup	3,000
RCP shutdown	3,000
Plant heat-up	120
Plant cooldown	120
Ramp load increase between 0 and 15 percent of full power	600
Ramp load decrease between 0 and 15 percent of full power	600
Ramp load increase between 15% and 100% of full power (5% of full power per minute)	600
Ramp load increase between 50% and 100% of full power (5% of full power per minute)	19,200
Ramp load decrease between 15% and 100% of full power (5% of full power per minute)	600
Ramp load decrease between 50% and 100% of full power (5% of full power per minute)	19,200
Step load increase of 10 percent of full power	600
Step load decrease of 10 percent of full power	600
Large step load decrease with turbine bypass	60
Steady-state fluctuation and load regulation	-
Steady-state fluctuation	1×10^6
Load regulation	8×10^5
Boron concentration equalization	39,600
Main feedwater cycling	2,100
Core lifetime extension	60
Refueling	60
Turbine roll test	10
Primary Leakage Test	120
Secondary Leakage Test	120
Level B Service Conditions	
Loss of load	60
Loss of offsite power	60
RT from full power	-
With no inadvertent cooldown	60
With cooldown and no Safety Injection	30
With cooldown and Safety Injection	10

Table 3.9-1 RCS Design Transients (Sheet 2 of 2)

Event	Cycles
Level B Service Conditions (Continued)	
Control rod drop	30
Cold over-pressure	30
Inadvertent safeguards actuation	30
Partial loss of reactor coolant flow	30
Inadvertent RCS depressurization	-
Umbrella case	30
Inadvertent auxiliary spray	15
Emergency feedwater cycling	700
Partial loss of emergency feedwater	30
Level C Service Conditions	
Small LOCA	5
Small steam line break	5
Complete loss of flow	5
Small feedwater line break	5
SG tube rupture	5
Level D Service Conditions	
Reactor coolant pipe break (large LOCA)	1
Large steam line break	1
Large feedwater line break	1
RCP locked rotor	1
Control rod ejection	1
Test Conditions	
Primary side hydrotest	10
Secondary side hydrotest	10

Table 3.9-2 Reactor Internals Interface Load and Displacement Limits

Reactor Interface Requirements	Load Limit	Displacement Limit	Technical Basis
a. Allowable horizontal load of the RCCA guide tube should not impede insertion of the RCCA after the LOCA event.	X(2)	n/a(1)	Determined based on Insertion Test (Reference 3.9-69)
b. Upper core barrel radial displacement to prevent impeding emergency core cooling flow in RV downcomer	n/a	2.36in (60mm)	
c. RV and upper head flange loads	X	n/a	Limited by bearing stress (Refer to Table 3.9-12 for the stress limits)
Lower radial key loads	X	n/a	To maintain the function as RV radial restraints
Postulated core drop bottom of RV impact load	X	n/a	Limited by RV Head stress
d. The maximum vertical displacement of the upper core plate relative to the upper support plate should preclude buckling of the guide tube.	n/a	0.12in (3mm)	
e. Upper core barrel permanent displacement should not prevent loss of function of the RCCA by radial inwardly deforming the upper guide tube.	n/a	10.63in (270mm)	

Notes:

1. The designation n/a means not applicable.

2. The letter X means a displacement requirement or load as defined in the design specification.

Table 3.9-3 Design Loading Combinations for ASME Code, Section III, Class 1, 2, 3, and CS Systems and Components

ASME Service Level	Design Loading Combinations(3)(6)
Design	$P + DL + L_{DM} + L_{EM}$
Level A	P_M (1)$+ DL + L_{EM}$
	P_M(1) $+ DL + L_{DFN}$(7) $+ L_{EM}$ (7) $+ TH_{TRN} + TH_{MTL}$
Level B	P_M(1) $+ DL + L_{DFU}$(7) $+ L_{EM}$ (7) $+ TH_{TRN} + TH_{MTL} + SSEI$(11) $+ SSEA$(11)
Level C	P_M(1) $+ DL + L_{DFE}$(7) $+ L_{EM}$ (7)
Level D	P_M(1) $+ DL + L_{DFF}$(7) $+ L_{EM}$ (7)
	P_M(1) $+ DL + SRSS$(2) $((SSEI + SSEA), DBPB) + L_{EM}$ (4)
	P_M(1) $+ DL + RV_{OS} + SSEI + SSEA + L_{EM}$ (9)
	P_M(1) $+ DL + L_{DFS} + SRSS$(2) $((SSEI + SSEA), DBPB) + L_{DFF} + L_{EM}$ (8)
Hydrostatic Test	H_{DL}(10)

Notes:

1. P_M is the maximum operational pressure for various ASME service levels of operation and dependent on the type of transient that occurs at a particular service level. During an earthquake P_M is considered normal operational pressure at 100% power levels.
2. SRSS stands for the square root sum of the squares.
3. Loadings generated by static displacement of the concrete containment vessel and building settlement are added to the loading combinations for ASME Code, Section III, Class 2 and 3 systems.
4. When determining appropriate load combinations involving L_{EM}, a determination of the timing sequence and initiating conditions that occur between P_M and L_{EM} are considered.
5. Deleted.
6. Table 3.9-5 provides a description of loads listed in this table.
7. In determining service level A, B, C, and D load combinations, the timing sequence and initiating conditions that occur between P_M, L_{DFN}, L_{DFU}, L_{DFE}, L_{DFF}, and L_{EM}, are considered respectively.
8. In determining appropriate service level load combination, the timing sequence and initiating conditions that occur between P_M, L_{DFF}, and L_{EM}, are considered.
9. In determining appropriate service level load combination, the timing sequence and initiating conditions that occur between P_M, RV_{OS}, and L_{EM}, are considered.
10. If, during operation, the system normally carries a medium other than water (air, gas, steam), sustained loads should be checked for weight loads during hydrostatic testing as well as normal operation weight loads.
11. The earthquake inertial and anchor movement loads used in the Level B Stress Intensity Range and Alternating Stress calculations are taken as 1/3 of the peak SSE inertial and anchor movement loads or as the peak SSE inertial and anchor movement loads. If the earthquake loads are taken as 1/3 of the peak SSE loads then the number of cycles to be considered for earthquake loading are 300 as derived in accordance with Institute of Electrical and Electronic Engineers Standard 344-2004 (Reference. 3.9-34). If the earthquake loads are taken as the peak SSE loads then 20 cycles of earthquake loading are considered.

Table 3.9-4 Design Loading Combinations for Supports for ASME Code, Section III, Class 1, 2, and 3 Components

Condition	Design Loading Combinations(3)
Design	$DL + L_{DM}$
Level A Service	$DL + TH_i + L_{EM} + L_{DFN}(4)+ F$
Level B Service	$DL + TH_i + L_{EM} + L_{DFU}$(4)
Level C Service	$DL + TH_E + L_{EM} + L_{DFE}$(4)
Level D Service	$DL + TH_i + L_{EM} + RV_{OS} + SSEI + SSEA + SE$(6)(8)
	$DL + TH_F + L_{EM} + L_{DFF}$(4)
	$DL + TH_i + L_{EM} + SRSS$(1) $(DBPB, (SSEI + SSEA + SE)(6))$
	$DL + TH_i + L_{EM}$(7) $+ L_{DFS} + SRSS$(1) $(DBPB, (SSEI + SSEA + SE)(6)) + L_{DFF}$ (7)
Hydrostatic Test	H_{DL}(9)

Notes:

1. SRSS stands for the square root sum of the squares .
2. Deleted.
3. Table 3.9-5 provides a description of loads listed in this table.
4. In determining service level A, B, C, and D load combinations, the timing sequence and initiating conditions that occur between TH_E, TH_F, L_{DFN}, L_{DFU}, L_{DFE}, L_{DFF}, and L_{EM}, are considered respectively.
5. Deleted.
6. *SE* is support self weight excitation of the support, caused by seismic building inertial loads. *SSEI*, *SSEA*, and *SE* are combined using absolute summation.
7. In determining appropriate service level load combination, the timing sequence and initiating conditions that occur among $L_{EM}$and L_{DFF} are considered.
8. In determining appropriate service level load combination, the timing sequence and initiating conditions that occur among TH_i and RV_{OS} are considered.
9. If, during operation, the system normally carries a medium other than water (air, gas, steam), sustained loads should be checked for weight loads during hydrostatic testing as well as normal operation weight loads.

Table 3.9-5 ASME Code, Section III, Class 1, 2, 3, CS, and Support Load Symbols and Definitions (Sheet 1 of 2)

Load Symbol	Load Definition	
DL	Dead Load (The dead weight consists of the weight of the piping, structures, components, insulation, and other loads permanently imposed upon the piping)	
P	Design Pressure, psi	
P_M	Maximum service pressure, psi	
F	Friction Loads	
TH_i	Thermal Loading for ASME Service Conditions, *i* = applicable service level (TH_N, TH_U, TH_{MTL}, see below)	
	TH_N = TH_U = TH_{MTL} =	ASME Service Level A (Normal) Thermal Loads ASME Service Level B (Upset) Thermal Loads ASME Service Level A (Normal) and Level B(Upset) Miscellaneous Thermal Loads with Thermal Stratification and Thermal Cycling Effects
TH_{TRN}	Thermal Transient Load	
TH_E	ASME Service Level C (Emergency) Thermal Load	
TH_F	ASME Service Level D (Faulted) Thermal Load	
L_{EM}	External Mechanically Applied Loads, Including Equipment Nozzle-to- Pipe Reactions	
L_{DM}	Design Mechanical Loads other than DL. This includes Service Level A Loads and Open Relief Valve Dynamic Loads that are Service Level B	
SSEI	Safe-shutdown Earthquake Inertia Loads	
SSEA	Safe-shutdown Earthquake Anchor Loads Other Than Pipe Reactions	
L_{DFS}	Sustained Dynamic Loads Associated with ASME Level A, B, C, and D Service Conditions	
L_{DFN}	ASME Service Level A (Normal) Dynamic Loads (Transient Valve Loads including QV_C (Quick Valve Closure), RV_C (Relief Valve Closed System Sudden Opening), RV_O (Relief Valve Open System Sudden Opening)	
L_{DFU}	ASME Service Level B (Upset) Dynamic Loads (Transient Valve Loads including QV_C (Quick Valve Closure)), RV_C (Relief Valve Closed System Sudden Opening), RV_O (Relief Valve Open System Sudden Opening)	
L_{DFE}	ASME Service Level C (Emergency) Dynamic Loads (Transient Valve Loads including QV_C (Quick Valve Closure)), RV_C (Relief Valve Closed System Sudden Opening), RV_O (Relief Valve Open System Sudden Opening)	
L_{DFF}	ASME Service Level D (Faulted) Dynamic Loads (Transient Valve Loads including QV_C (Quick Valve Closure)), RV_C (Relief Valve Closed System Sudden Opening), RV_O (Relief Valve Open System Sudden Opening)	
SE	*SE* is Support self weight excitation, the effect of the acceleration of the support mass caused by building inertial loads such as *SSEI*	
RV_{OS}	Relief Valve Open System Sudden Opening Sustained	

Table 3.9-5 ASME Code, Section III, Class 1, 2, 3, CS, and Support Load Symbols and Definitions (Sheet 2 of 2)

Load Symbol	Load Definition
H_{DL}	Hydrostatic Dead Load Weight added during Testing. This weight consists of the weight of the fluid being handled or of the fluid used for testing or cleaning, whichever is greater.
DBPB	Design Basis Pipe Break
MSPB	Main Steam Pipe Break
FWPB	Feedwater Pipe Break
LOCA	Loss of Coolant Accident
SOT	System Operational Transient
Sustained Loads	Normal Operating Loads such as *DL*, P_M, and *TH*
Transient Loads	Dynamic System Loads that result from sudden system operational changes
Dynamic Loads	Fluid Pressure Transient Loads that occur as a result of sudden system operational changes.

Table 3.9-6 Stress Criteria for ASME Code, Section III, Class 1, Components(1) and Supports and Class CS Core Supports

Design/Service Level	Vessels/Tanks & Pumps	Piping (7)	Core Supports	Valves, Disks & Seats	Components Supports (2)(3)
Design and Service Level A (Normal)	ASME Code, Section III, NB-3221, 3222	See Section 3.12	ASME Code, Section III, NG-3221, 3222, 3231, 3232	ASME Code, Section III, NB-3520, 3525	ASME Code, Section III, Subsection NF (4)
Service Level B (Upset)	ASME Code, Section III, NB-3223	See Section 3.12	ASME Code, Section III, NG-3223, 3233	ASME Code, Section III, NB-3525	ASME Code, Section III, Subsection NF (4)
Service Level C (Emergency)	ASME Code, Section III, NB-3224	See Section 3.12	ASME Code, Section III, NG-3224, 3234	ASME Code, Section III, NB-3526	ASME Code, Section III, Subsection NF (4)
Service Level D (Faulted)	ASME Code, Section III, (see 3.9.1.4) NB-3225 (no active Class 1 pumps used)	See Section 3.12	ASME Code, Section III, NG-3225, 3235	(1) (6)	ASME Code, Section III, Subsection NF (4), (see 3.9.3.4) (5)

Notes:

1. Refer to ASME III Appendix F for pressure boundary integrity requirements.

2. Component supports include equipment and piping supports. For pipe support criteria explanation refer to Section 3.12 of the DCD. For component supports refer to Section 3.9.3 of the DCD.

3. RG 1.124, Rev. 1 provides additional methods that can be used for evaluating component supports in addition to ASME Code, Section III, Subsection NF requirements.

4. ASME Code, Section III, Subsection NF, Table 3131(a)-1 provides reference paragraphs for subsection NF procedural sections used for design of component supports, piping supports, and standard supports.

5. Subsection 3.9.3.4 provides criteria for component supports used for active equipment, valves, and piping with active valves.

6. Active valve operability is demonstrated by testing or analysis. Pressure integrity verification of active valves is based on using the ASME Code allowables one level less than the service loading condition. Subsection 3.9.3.2 provides additional information on test requirements.

7. Table 3.12-2 includes additional stress limits for piping.

Table 3.9-7 List of Active Pumps (Sheet 1 of 3)

Pump	System	ASME Class	Normal Operation Mode	Post LOCA Mode	Basis
A-Charging Pump	CVCS	3	ON/OFF	OFF	Required For Supply RCP Seal Cooling at Accident Except Large LOCA
B-Charging Pump	CVCS	3	ON/OFF	OFF	Required For Supply RCP Seal Cooling at Accident Except Large LOCA
A-Safety Injection Pump	SIS	2	OFF	ON	Required For Safety Injection an Emergency Boration
B-Safety Injection Pump	SIS	2	OFF	ON	Required For Safety Injection and Emergency Boration
C-Safety Injection Pump	SIS	2	OFF	ON	Required For Safety Injection and Emergency Boration
D-Safety Injection Pump	SIS	2	OFF	ON	Required For Safety Injection and Emergency Boration
A-Containment Spray/Residual Heat Removal Pump	RHRS	2	OFF	ON	Required For Containment Spray and Plant Shutdown
B-Containment Spray/Residual Heat Removal Pump	RHRS	2	OFF	ON	Required For Containment Spray and Plant Shutdown
C-Containment Spray/Residual Heat Removal Pump	RHRS	2	OFF	ON	Required For Containment Spray and Plant Shutdown
D-Containment Spray/Residual Heat Removal Pump	RHRS	2	OFF	ON	Required For Containment Spray and Plant Shutdown
A-Emergency Feed Water Pump	EFWS	3	OFF	ON	Required For Feedwater Supply to SG at Accident
B-Emergency Feed Water Pump	EFWS	3	OFF	ON	Required For Feedwater Supply to SG
C-Emergency Feed Water Pump	EFWS	3	OFF	ON	Required For Feedwater Supply to SG

Table 3.9-7 List of Active Pumps (Sheet 2 of 3)

Pump	System	ASME Class	Normal Operation Mode	Post LOCA Mode	Basis
D-Emergency Feed Water Pump	EFWS	3	OFF	ON	Required For Feedwater Supply to SG
A-CCW Pump	CCWS	3	ON/OFF	ON	Required For Cooling Water Supply to Safety-Related Component
B-CCW Pump	CCWS	3	ON/OFF	ON	Required For Cooling Water Supply to Safety-Related Component
C-CCW Pump	CCWS	3	ON/OFF	ON	Required For Cooling Water Supply to Safety-Related Component
D-CCW Pump	CCWS	3	ON/OFF	ON	Required For Cooling Water Supply to Safety-Related Component
A-Spent Fuel Pit Pump	SFPCS	3	ON/OFF	ON/OFF	Required For SFP Cooling
B-Spent Fuel Pit Pump	SFPCS	3	ON/OFF	ON/OFF	Required For SFP Cooling
A-Essential Service Water Pump	ESWS	3	ON/OFF	ON	Required For Cooling Water Supply to CCHXs
B-Essential Service Water Pump	ESWS	3	ON/OFF	ON	Required For Cooling Water Supply to CCHXs
C-Essential Service Water Pump	ESWS	3	ON/OFF	ON	Required For Cooling Water Supply to CCHXs
D-Essential Service Water Pump	ESWS	3	ON/OFF	ON	Required For Cooling Water Supply to CCHXs
A-Refueling Water Recirculation Pump	RWS	3	ON/OFF	OFF	Required For Purifying Water in RWSP
B-Refueling Water Recirculation Pump	RWS	3	ON/OFF	OFF	Required For Purifying Water in RWSP
A-Essential Chiller Water Pump	CWS	3	ON/OFF	ON	Required For Cooling Water Supply to HVACS
B-Essential Chiller Water Pump	CWS	3	ON/OFF	ON	Required For Cooling Water Supply to HVACS

Table 3.9-7 List of Active Pumps (Sheet 3 of 3)

Pump	System	ASME Class	Normal Operation Mode	Post LOCA Mode	Basis
C-Essential Chiller Water Pump	CWS	3	ON/OFF	ON	Required For Cooling Water Supply to HVACS
D-Essential Chiller Water Pump	CWS	3	ON/OFF	ON	Required For Cooling Water Supply to HVACS
A-Emergency Gas Turbine Fuel Oil Transfer Pump	FOS	3	OFF	ON	Required For Fuel Oil Supply to Gas Turbine
B-Emergency Gas Turbine Fuel Oil Transfer Pump	FOS	3	OFF	ON	Required For Fuel Oil Supply to Gas Turbine
C-Emergency Gas Turbine Fuel Oil Transfer Pump	FOS	3	OFF	ON	Required For Fuel Oil Supply to Gas Turbine
D-Emergency Gas Turbine Fuel Oil Transfer Pump	FOS	3	OFF	ON	Required For Fuel Oil Supply to Gas Turbine
E-Emergency Gas Turbine Fuel Oil Transfer Pump	FOS	3	OFF	ON	Required For Fuel Oil Supply to Gas Turbine
F-Emergency Gas Turbine Fuel Oil Transfer Pump	FOS	3	OFF	ON	Required For Fuel Oil Supply to Gas Turbine
G-Emergency Gas Turbine Fuel Oil Transfer Pump	FOS	3	OFF	ON	Required For Fuel Oil Supply to Gas Turbine
H-Emergency Gas Turbine Fuel Oil Transfer Pump	FOS	3	OFF	ON	Required For Fuel Oil Supply to Gas Turbine

Table 3.9-8 Stress Criteria for ASME Code, Section III Class and Components and Supports

Design/ Service Level	Vessels/Tanks	Piping (6)	Pumps	Valves, Disks, Seats	Component Supports (1)(2)
Design and Service Level A	ASME Code, Section III, NC/ND-3310, 3320	See Section 3.12	ASME Code, Section III, NC/ND-3400	ASME Code, Section III, NC/ND-3510	ASME Code, Section III, (3)
Service Level B (Upset)	ASME Code, Section III, NC/ND-3310, 3320	See Section 3.12	ASME Code, Section III, NC/ND-3400	ASME Code, Section III, NC/ND-3520	ASME Code, Section III, (3)
Service Level C (Emergency)	ASME Code, Section III, NC/ND-3310, 3320	See Section 3.12	ASME Code, Section III, NC/ND-3400	ASME Code, Section III, NC/ND-3520	ASME Code, Section III, (3)
Service Level D (Faulted)	ASME Code, Section III, NC/ND-3310, 3320	See Section 3.12	ASME Code, Section III, NC/ND-3400	ASME Code, Section III, NC/ND-3520 (5)	ASME Code, Section III, (3)(4)

Notes:

1. Component supports include equipment and piping supports. For pipe support criteria explanation refer to Section 3.12 of the DCD. For component supports refer to Section 3.9.3 of the DCD.

2. RG 1.124, Rev. 1 provides additional methods that can be used for evaluating component supports in addition to ASME Code, Section III, Subsection NF requirements.

3. ASME Code, Section III, Subsection NF, Table 3131(a)-1 provides reference paragraphs for Subsection NF procedural sections used for design of component supports, piping supports, and standard supports.

4. Subsection 3.9.3.4 provides criteria for component supports used for active equipment, valves, and piping with active valves.

5. Active valve operability is demonstrated by testing or analysis. Pressure integrity verification of active valves is based on using the ASME Code allowables one level less than the service loading condition. Subsection 3.9.3.2 provides additional information on test requirements.

6. Table 3.12-3 provides additional stress limit information for piping.

Table 3.9-9 CRDM Pressure Housing Loading Conditions and Load Combinations

	Service Limits for Load Combinations				
Loading Conditions	**Design**	**Level A and B**	**Level C**	**Level D(1)**	**Testing(5)**
Design Pressure	X(2)	n/a	n/a	n/a	n/a
Deadweights	X	X	X	X	X
1/3 SSE(3)	n/a	X	n/a	n/a	n/a
SSE loads	n/a	n/a	n/a	X	n/a
Normal thermal and pressure transients and thermal expansion	n/a	X	n/a	n/a	n/a
Upset thermal and pressure transients and thermal expansion	n/a	X	n/a	n/a	n/a
Emergency thermal and pressure transients	n/a	n/a	X	n/a	n/a
Faulted pressure	n/a	n/a	n/a	X	n/a
LOCA response load	n/a	n/a	n/a	X	n/a
Hydrostatic test pressure	n/a	n/a	n/a	n/a	X

Notes:

1. Level D loads are combined for SSE and LOCA (LBB) by SRSS.
2. The letter X means stresses to be combined and compared to the design or service stress limits.
3. 1/3 the response of the SSE load and the result is to be applied only in the fatigue analysis for Level A + Level B combined loadings.
4. n/a means not applicable or not required to be analyzed.
5. Testing condition is combined with normal and upset conditions in fatigue analysis.

Table 3.9-10 CRDM Pressure Housing Stress Categories and Stress Intensity Limits

Category (1)	Service Limits	Design	Level A + Level B	Level C(6)	Level D
Primary Membrane	P_m	S_m	S_m	$1.2S_m$ or S_y	Lesser of $2.4S_m$ and $0.7S_u$
Local Membrane	P_L	$1.5S_m$	$1.5S_m$	$1.8S_m$ or $1.5S_y$	150% of P_m limits
Primary Membrane + Bending	P_L+P_b	$1.5S_m$	$1.5S_m$	$1.8S_m$ or $1.5S_y$	150% of P_m limits
Primary plus secondary	$P_L + P_b + Q$	---	$3.0S_m$(2)	---	---
Thermal Expansion	P_e	---	$3.0\ S_m$(3)	---	---
Fatigue	U(4)	---	<1.0	---	---
Thermal Stress Ratchet	S_{TH}(5)	---	<y'S_y (5)	---	---

Notes:

1. Definition of stress categories is consistent with NB-3213.
2. Where permitted, the limits of NB-3228.5, simplified elastic-plastic analysis, are met in lieu of the $3.0S_m$ limit.
3. based on support configuration, no significant thermal expansion loads are applied to the CRDMs.
4. U is defined as allowable cycles divided by actual service condition cycles, based on calculated alternating stress and fatigue curve. Alternating stress is adjusted by the modulus of elasticity.
5. S_{TH} thermal stress range, other terms as defined in NB-3222.5.
6. Identified stress limit of the level C is for elastic analysis. If stress intensity by elastic analysis is over the stress limit, ASME section III subsection NB allows limit analysis and triaxial analysis by NB-3224.3.

Table 3.9-11 Core Support Structures and Threaded Structural Fasteners Loading Conditions and Load Combinations

	Service Limits for Load Combinations				
Loading Conditions	**Design**	**Level A(5)**	**Level B**	**Level C(1)**	**Level D(1)**
Pressure differences	X(2)	X	X	n/a(3)	n/a
Weights and buoyant forces	X	X	X	X	X
Lift and drag flow loads	X	X	X	X	X
Reactor internals hold down spring load	X	X	X	X	X
Superimposed internal loads from fuel assembly (f/a) hold-down spring forces; f/a lift forces; f/a weights and buoyant forces; f/a grid loads from SSE and LOCA	X	X	X	X	X
1/3 SSE loads(4)	n/a	n/a	X	n/a	n/a
SSE loads	n/a	n/a	n/a	n/a	X
External reaction loads from restraints at upper core support flange; core barrel flange; core barrel nozzle; radial support keys	n/a	X	X	X	X
Thermal loads from transients, gamma heating, and differential thermal expansion	n/a	X	X	n/a	n/a
LOCA differential pressure loads	n/a	n/a	n/a	X	X
Vibratory loads from flow induced vibration and pump induced vibration	X	X	X	n/a	n/a
RCCA stuck rod load (analyzed separately)	n/a	X	n/a	n/a	n/a
Handling and shipping loads (analyzed separately)	n/a	X	n/a	n/a	n/a

Notes:
1. Level C loads and Level D loads are combined for SSE and LOCA (LBB) by SRSS.
2. The letter X means stresses to be combined and compared to the design or service stress limits. For example, Level B service limits in the ASME Code, Sub-section NG should be larger than the core support structures stress intensity and fatigue usage factors resulting from the combined loadings of pressure difference + weight and buoyant forces + lift and drag forces + external reaction restraints + thermal loads + vibratory loads.
3. n/a means not applicable or not required to be analyzed.
4. The earthquake inertial loads used in the Level B Stress Intensity Range and Alternating Stress calculations are taken as 1/3 of the peak SSE inertial loads. The number of cycles to be considered for earthquake loading are 300 as derived in accordance with Institute of Electrical and Electronic Engineers Standard 344-2004 (Reference 3.9-34).
5. The Hot Functional Test Condition can be enveloped by the limits for Level A.

Table 3.9-12 Core Support Structures Stress Categories and Stress Intensity Limits

Stress Category		Service Limits			
		Design	Level A + Level B	Level C	Level D
Primary Membrane	P_m	S_m	S_m	$1.5S_m$	Lesser of $2.4S_m$ and $0.7S_u$
Primary Membrane + Bending	$P_m + P_b$	$1.5S_m$	$1.5S_m$	$2.25S_m$	Lesser of $3.6S_m$ and $1.05S_u$
Primary Membrane + Bending + Secondary	$P_m + P_b + Q$	---	$3.0S_m$	---	---
Peak Fatigue Usage Factor	$P_m + P_b + Q + F$ ΣU(2)	--- ---	S_a < 1.0	--- ---	--- ---
Average Primary Shear		$0.6S_m$	$0.6S_m$(1)	$0.9S_m$	$1.2S_m$
Bearing		S_y $(1.5S_y)$	S_y(1) $(1.5S_y)$ (1)	$1.5S_y$ $(2.25S_y)$	$2S_y$ $(3S_y)$

Note:

1. Applied only as Level A service limits

2. ΣU is defined as actual service condition cycles divided by allowable cycles, based on calculated alternating stress and fatigue curve. Alternating stress is adjusted by the modulus of elasticity.

Table 3.9-13 Pump IST (Sheet 1 of 6)

Tag No.	Description	Pump Type	Group	Required Test				Test Frequency	Acceptance Criteria
				Outlet Flow	Differential Pressure	Vibration	Speed		
CVS-MPP-001A	A-Charging pump	Centrifugal	A	○	○	○	N/A(constant speed induction motor)	1. Quarterly, Required Test is conducted. 2. Biennially, Comprehensive Test is conducted.	Table ISTB-5121-1 in ASME OM Code (Reference 3.9-13) is applied.
CVS-MPP-001B	B-Charging pump	Centrifugal	A	○	○	○	N/A(constant speed induction motor)	1. Quarterly, Required Test is conducted. 2. Biennially, Comprehensive Test is conducted.	Table ISTB-5121-1 in ASME OM Code (Reference 3.9-13) is applied.
SIS-MPP-001A	A-Safety injection pump	Centrifugal	B	○	○	–	N/A(constant speed induction motor)	1. Quarterly, Required Test is conducted 2. Biennially, Comprehensive Test including vibration test is conducted	Table ISTB-5121-1 in ASME OM Code (Reference 3.9-13) is applied.
SIS-MPP-001B	B-Safety injection pump	Centrifugal	B	○	○	–	N/A(constant speed induction motor)	1. Quarterly, Required Test is conducted 2. Biennially, Comprehensive Test including vibration test is conducted.	Table ISTB-5121-1 in ASME OM Code (Reference 3.9-13) is applied.
SIS-MPP-001C	C-Safety injection pump	Centrifugal	B	○	○	–	N/A(constant speed induction motor)	1. Quarterly, Required Test is conducted 2. Biennially, Comprehensive Test including vibration test is conducted	Table ISTB-5121-1 in ASME OM Code (Reference 3.9-13) is applied.
SIS-MPP-001D	D-Safety injection pump	Centrifugal	B	○	○	–	N/A(constant speed induction motor)	1. Quarterly, Required Test is conducted 2. Biennially, Comprehensive Test including vibration test is conducted.	Table ISTB-5121-1 in ASME OM Code (Reference 3.9-13) is applied.

Table 3.9-13 Pump IST (Sheet 2 of 6)

Tag No.	Description	Pump Type	Group	Required Test				Test Frequency	Acceptance Criteria
				Outlet Flow	Differential Pressure	Vibration	Speed		
RHS-MPP-001A	A-Containment spray/residual heat removal pump	Centrifugal	A	○	○	○	N/A(constant speed induction motor)	1. Quarterly, Required Test is conducted 2. Biennially, Comprehensive Test is conducted	Table ISTB-5121-1 in ASME OM Code (Reference 3.9-13) is applied.
RHS-MPP-001B	B-Containment spray/residual heat removal pump	Centrifugal	A	○	○	○	N/A(constant speed induction motor)	1. Quarterly, Required Test is conducted 2. Biennially, Comprehensive Test is conducted	Table ISTB-5121-1 in ASME OM Code (Reference 3.9-13) is applied.
RHS-MPP-001C	C-Containment spray/residual heat removal pump	Centrifugal	A	○	○	○	N/A(constant speed induction motor)	1. Quarterly, Required Test is conducted 2. Biennially, Comprehensive Test is conducted	Table ISTB-5121-1 in ASME OM Code (Reference 3.9-13) is applied.
RHS-MPP-001D	D-Containment spray/residual heat removal pump	Centrifugal	A	○	○	○	N/A(constant speed induction motor)	1. Quarterly, Required Test is conducted 2. Biennially, Comprehensive Test is conducted	Table ISTB-5121-1 in ASME OM Code (Reference 3.9-13) is applied.
EFS-MPP-001A	A-Emergency feedwater pump	Turbine Driven Centrifugal	B	○	○	–	○	1. Quarterly, Required Test is conducted 2. Biennially, Comprehensive Test including vibration test is conducted.	Table ISTB-5121-1 in ASME OM Code (Reference 3.9-13) is applied.
EFS-MPP-001B	B-Emergency feedwater pump	Motor Driven Centrifugal	B	○	○	–	N/A(constant speed induction motor)	1. Quarterly, Required Test is conducted 2. Biennially, Comprehensive Test including vibration test is conducted.	Table ISTB-5121-1 in ASME OM Code (Reference 3.9-13) is applied.

Table 3.9-13 Pump IST (Sheet 3 of 6)

Tag No.	Description	Pump Type	Group	Required Test				Test Frequency	Acceptance Criteria
				Outlet Flow	Differential Pressure	Vibration	Speed		
EFS-MPP-001C	C-Emergency feedwater pump	Turbine Driven Centrifugal	B	○	○	–	○	1. Quarterly, Required Test is conducted 2. Biennially, Comprehensive Test including vibration test is conducted.	Table ISTB-5121-1 in ASME OM Code (Reference 3.9-13) is applied.
EFS-MPP-001D	D-Emergency feedwater pump	Motor Driven Centrifugal	B	○	○	–	N/A(constant speed induction motor)	1. Quarterly, Required Test is conducted 2. Biennially, Comprehensive Test including vibration test is conducted.	Table ISTB-5121-1 in ASME OM Code (Reference 3.9-13) is applied.
NCS-MPP-001A	A-Component cooling water pump	Centrifugal	A	○	○	○	N/A(constant speed induction motor)	1. Quarterly, Required Test is conducted. 2. Biennially, Comprehensive Test is conducted.	Table ISTB-5121-1 in ASME OM Code (Reference 3.9-13) is applied.
NCS-MPP-001B	B-Component cooling water pump	Centrifugal	A	○	○	○	N/A(constant speed induction motor)	1. Quarterly, Required Test is conducted. 2. Biennially, Comprehensive Test is conducted.	Table ISTB-5121-1 in ASME OM Code (Reference 3.9-13) is applied.
NCS-MPP-001C	C-Component cooling water pump	Centrifugal	A	○	○	○	N/A(constant speed induction motor)	1. Quarterly, Required Test is conducted. 2. Biennially, Comprehensive Test is conducted.	Table ISTB-5121-1 in ASME OM Code (Reference 3.9-13) is applied.
NCS-MPP-001D	D-Component cooling water pump	Centrifugal	A	○	○	○	N/A(constant speed induction motor)	1. Quarterly, Required Test is conducted. 2. Biennially, Comprehensive Test is conducted.	Table ISTB-5121-1 in ASME OM Code (Reference 3.9-13) is applied.
EWS-MPP-001A	A-Essential service water pump	Vertical Line Shaft Centrifugal	A	○	○	○	N/A(constant speed induction motor)	1. Quarterly, Required Test is conducted. 2. Biennially, Comprehensive Test is conducted.	Table ISTB-5221-1 in ASME OM Code (Reference 3.9-13) is applied.

Table 3.9-13 Pump IST (Sheet 4 of 6)

Tag No.	Description	Pump Type	Group	Required Test				Test Frequency	Acceptance Criteria
				Outlet Flow	Differential Pressure	Vibration	Speed		
EWS-MPP-001B	B-Essential service water pump	Vertical Line Shaft Centrifugal	A	○	○	○	N/A(constant speed induction motor)	1. Quarterly, Required Test is conducted. 2. Biennially, Comprehensive Test is conducted.	Table ISTB-5221-1 in ASME OM Code (Reference 3.9-13) is applied.
EWS-MPP-001C	C-Essential service water pump	Vertical Line Shaft Centrifugal	A	○	○	○	N/A(constant speed induction motor)	1. Quarterly, Required Test is conducted. 2. Biennially, Comprehensive Test is conducted.	Table ISTB-5221-1 in ASME OM Code (Reference 3.9-13) is applied.
EWS-MPP-001D	D-Essential service water pump	Vertical Line Shaft Centrifugal	A	○	○	○	N/A(constant speed induction motor)	1. Quarterly, Required Test is conducted. 2. Biennially, Comprehensive Test is conducted.	Table ISTB-5221-1 in ASME OM Code (Reference 3.9-13) is applied.
SFS-MPP-001A	A-Spent fuel pit pump	Centrifugal	A	○	○	○	N/A(constant speed induction motor)	1. Quarterly, Required Test is conducted. 2. Biennially, Comprehensive Test is conducted.	Table ISTB-5121-1 in ASME OM Code (Reference 3.9-13) is applied.
SFS-MPP-001B	B-Spent fuel pit pump	Centrifugal	A	○	○	○	N/A(constant speed induction motor)	1. Quarterly, Required Test is conducted. 2. Biennially, Comprehensive Test is conducted.	Table ISTB-5121-1 in ASME OM Code (Reference 3.9-13) is applied.
RWS-MPP-001A	A-Refueling Water Recirculation Pump	Centrifugal	A	○	○	○	N/A(constant speed induction motor)	1. Quarterly, Required Test is conducted. 2. Biennially, Comprehensive Test is conducted.	Table ISTB-5121-1 in ASME OM Code (Reference 3.9-13) is applied.
RWS-MPP-001B	B-Refueling Water Recirculation Pump	Centrifugal	A	○	○	○	N/A(constant speed induction motor)	1. Quarterly, Required Test is conducted. 2. Biennially, Comprehensive Test is conducted.	Table ISTB-5121-1 in ASME OM Code (Reference 3.9-13) is applied.

Table 3.9-13 Pump IST (Sheet 5 of 6)

Tag No.	Description	Pump Type	Group	Required Test				Test Frequency	Acceptance Criteria
				Outlet Flow	Differential Pressure	Vibration	Speed		
VWS-MPP-001A	A-Essential Chilled Water Pump	Centrifugal	A	○	○	○	N/A(constant speed induction motor)	1. Quarterly, Required Test is conducted. 2. Biennially, Comprehensive Test is conducted.	Table ISTB-5121-1 in ASME OM Code (Reference 3.9-13) is applied.
VWS-MPP-001B	B-Essential Chilled Water Pump	Centrifugal	A	○	○	○	N/A(constant speed induction motor)	1. Quarterly, Required Test is conducted. 2. Biennially, Comprehensive Test is conducted.	Table ISTB-5121-1 in ASME OM Code (Reference 3.9-13) is applied.
VWS-MPP-001C	C-Essential Chilled Water Pump	Centrifugal	A	○	○	○	N/A(constant speed induction motor)	1. Quarterly, Required Test is conducted. 2. Biennially, Comprehensive Test is conducted.	Table ISTB-5121-1 in ASME OM Code (Reference 3.9-13) is applied.
VWS-MPP-001D	D-Essential Chilled Water Pump	Centrifugal	A	○	○	○	N/A(constant speed induction motor)	1. Quarterly, Required Test is conducted. 2. Biennially, Comprehensive Test is conducted.	Table ISTB-5121-1 in ASME OM Code (Reference 3.9-13) is applied.
GTS-MPP-001A	A-Emergency Gas Turbine Fuel Oil Transfer Pump	Centrifugal	B	○	○	–	N/A(constant speed induction motor)	1. Quarterly, Required Test is conducted 2. Biennially, Comprehensive Test including vibration test is conducted.	Table ISTB-5121-1 in ASME OM Code (Reference 3.9-13) is applied.
GTS-MPP-002A	B-Emergency Gas Turbine Fuel Oil Transfer Pump	Centrifugal	B	○	○	–	N/A(constant speed induction motor)	1. Quarterly, Required Test is conducted 2. Biennially, Comprehensive Test including vibration test is conducted.	Table ISTB-5121-1 in ASME OM Code (Reference 3.9-13) is applied.
GTS-MPP-001B	C-Emergency Gas Turbine Fuel Oil Transfer Pump	Centrifugal	B	○	○	–	N/A(constant speed induction motor)	1. Quarterly, Required Test is conducted 2. Biennially, Comprehensive Test including vibration test is conducted.	Table ISTB-5121-1 in ASME OM Code (Reference 3.9-13) is applied.

Table 3.9-13 Pump IST (Sheet 6 of 6)

Tag No.	Description	Pump Type	Group	Required Test				Test Frequency	Acceptance Criteria
				Outlet Flow	Differential Pressure	Vibration	Speed		
GTS-MPP-002B	D-Emergency Gas Turbine Fuel Oil Transfer Pump	Centrifugal	B	○	○	–	N/A(constant speed induction motor)	1. Quarterly, Required Test is conducted 2. Biennially, Comprehensive Test including vibration test is conducted.	Table ISTB-5121-1 in ASME OM Code (Reference 3.9-13) is applied.
GTS-MPP-001C	E-Emergency Gas Turbine Fuel Oil Transfer Pump	Centrifugal	B	○	○	–	N/A(constant speed induction motor)	1. Quarterly, Required Test is conducted 2. Biennially, Comprehensive Test including vibration test is conducted.	Table ISTB-5121-1 in ASME OM Code (Reference 3.9-13) is applied.
GTS-MPP-002C	F-Emergency Gas Turbine Fuel Oil Transfer Pump	Centrifugal	B	○	○	–	N/A(constant speed induction motor)	1. Quarterly, Required Test is conducted 2. Biennially, Comprehensive Test including vibration test is conducted.	Table ISTB-5121-1 in ASME OM Code (Reference 3.9-13) is applied.
GTS-MPP-001D	G-Emergency Gas Turbine Fuel Oil Transfer Pump	Centrifugal	B	○	○	–	N/A(constant speed induction motor)	1. Quarterly, Required Test is conducted 2. Biennially, Comprehensive Test including vibration test is conducted.	Table ISTB-5121-1 in ASME OM Code (Reference 3.9-13) is applied.
GTS-MPP-002D	H-Emergency Gas Turbine Fuel Oil Transfer Pump	Centrifugal	B	○	○	–	N/A(constant speed induction motor)	1. Quarterly, Required Test is conducted 2. Biennially, Comprehensive Test including vibration test is conducted.	Table ISTB-5121-1 in ASME OM Code (Reference 3.9-13) is applied.

Table 3.9-14 Valve Inservice Test Requirements (Sheet 1 of 124)

Valve Tag Number	Description	Valve/ Actuator Type	Safety-Related Missions	Safety Functions(2)	ASME IST Category	Inservice Testing Type and Frequency	IST Notes
RCS-SRV-120	Pressurizer safety valve	Relief	Maintain Close Transfer Open Transfer Close	Active RCS Pressure Boundary Remote Position	BC	Remote Position Indication, Alternate/ 2 Years Class 1 Relief Valve Tests/5 Years and 20% in 2 Years	1
RCS-SRV-121	Pressurizer safety valve	Relief	Maintain Close Transfer Open Transfer Close	Active RCS Pressure Boundary Remote Position	BC	Remote Position Indication, Alternate/ 2 Years Class 1 Relief Valve Tests/5 Years and 20% in 2 Years	1
RCS-SRV-122	Pressurizer safety valve	Relief	Maintain Close Transfer Open Transfer Close	Active RCS Pressure Boundary Remote Position	BC	Remote Position Indication, Alternate/ 2 Years Class 1 Relief Valve Tests/5 Years and 20% in 2 Years	1
RCS-SRV-123	Pressurizer safety valve	Relief	Maintain Close Transfer Open Transfer Close	Active RCS Pressure Boundary Remote Position	BC	Remote Position Indication, Alternate/ 2 Years Class 1 Relief Valve Tests/5 Years and 20% in 2 Years	1

Table 3.9-14 Valve Inservice Test Requirements (Sheet 2 of 124)

Valve Tag Number	Description	Valve/ Actuator Type	Safety-Related Missions	Safety Functions(2)	ASME IST Category	Inservice Testing Type and Frequency	IST Notes
RCS-MOV-117A	Safety depressurization valve	Remote MO Globe	Maintain Close Transfer Open Transfer Close	Active RCS Pressure Boundary Remote Position	A	Remote Position Indication, Exercise/ 2 Years Exercise Full Stroke/ Cold Shutdown Operability Test Leak Test/Refueling Outage	2 15
RCS-MOV-117B	Safety depressurization valve	Remote MO Globe	Maintain Close Transfer Open Transfer Close	Active RCS Pressure Boundary Remote Position	A	Remote Position Indication, Exercise/ 2 Years Exercise Full Stroke/ Cold Shutdown Operability Test Leak Test/Refueling Outage	2 15
RCS-MOV-116A	Safety depressurization valve block valve	Remote MO Gate	Maintain Open Maintain Close Transfer Close Transfer Open	Active RCS Pressure Boundary Remote Position	A	Remote Position Indication, Exercise/ 2 Years Exercise Full Stroke/ Quarterly Operability Test Leak Test/Refueling Outage	15
RCS-MOV-116B	Safety depressurization valve block valve	Remote MO Gate	Maintain Open Maintain Close Transfer Close Transfer Open	Active RCS Pressure Boundary Remote Position	A	Remote Position Indication, Exercise/ 2 Years Exercise Full Stroke/ Quarterly Operability Test Leak Test/Refueling Outage	15
(Deleted)							

Table 3.9-14 Valve Inservice Test Requirements (Sheet 3 of 124)

Valve Tag Number	Description	Valve/ Actuator Type	Safety-Related Missions	Safety Functions(2)	ASME IST Category	Inservice Testing Type and Frequency	IST Notes
(Deleted)							
RCS-MOV-002A	Reactor vessel head vent valve	Remote MO Globe	Maintain Close Transfer Open Transfer Close	Active RCS Pressure Boundary Remote Position	A	Remote Position Indication, Exercise/ 2 Years Exercise Full Stroke/ Cold Shutdown Operability Test Leak Test/Refueling Outage	2 15
RCS-MOV-002B	Reactor vessel head vent valve	Remote MO Globe	Maintain Close Transfer Open Transfer Close	Active RCS Pressure Boundary Remote Position	A	Remote Position Indication, Exercise/ 2 Years Exercise Full Stroke/ Cold Shutdown Operability Test Leak Test/Refueling Outage	2 15
RCS-MOV-003A	Reactor vessel head vent valve	Remote MO Globe	Maintain Close Transfer Open Transfer Close	Active RCS Pressure Boundary Remote Position	A	Remote Position Indication, Exercise/ 2 Years Exercise Full Stroke/ Cold Shutdown Operability Test Leak Test/Refueling Outage	2 15
RCS-MOV-003B	Reactor vessel head vent valve	Remote MO Globe	Maintain Close Transfer Open Transfer Close	Active RCS Pressure Boundary Remote Position	A	Remote Position Indication, Exercise/ 2 Years Exercise Full Stroke/ Cold Shutdown Operability Test Leak Test/Refueling Outage	2 15

Table 3.9-14 Valve Inservice Test Requirements (Sheet 4 of 124)

Valve Tag Number	Description	Valve/ Actuator Type	Safety-Related Missions	Safety Functions(2)	ASME IST Category	Inservice Testing Type and Frequency	IST Notes
RCS-AOV-132	Nitrogen gas supply line containment isolation	Remote AO weir type diaphragm	Maintain Close Transfer Close	Active-to-Fail Containment Isolation Safety Seat Leakage Remote Position	A	Remote Position Indication, Exercise/ 2 Years Containment Isolation Leak Test Exercise Full Stroke/ Quarterly Operability Test	5 6
RCS-VLV-133	Nitrogen gas supply line containment isolation check	Check	Maintain Close Transfer Close	Active Containment Isolation Safety Seat Leakage	AC	Containment Isolation Leak Test Check Exercise/ Refueling Outage	3 5
RCS-AOV-138	Primary makeup water supply line containment isolation	Remote AO Globe	Maintain Close Transfer Close	Active-to-Fail Containment Isolation Safety Seat Leakage Remote Position	A	Remote Position Indication, Exercise/ 2 Years Containment Isolation Leak Test Exercise Full Stroke/ Quarterly Operability Test	5 6
RCS-VLV-139	Primary makeup water supply line containment isolation check	Check	Maintain Close Transfer Close	Active Containment Isolation Safety Seat Leakage	AC	Containment Isolation Leak Test Check Exercise/ Refueling Outage	3 5

Table 3.9-14 Valve Inservice Test Requirements (Sheet 5 of 124)

Valve Tag Number	Description	Valve/ Actuator Type	Safety-Related Missions	Safety Functions(2)	ASME IST Category	Inservice Testing Type and Frequency	IST Notes
RCS-AOV-147	Pressurizer relief tank gas analyzer line containment isolation	Remote AO Globe	Maintain Close Transfer Close	Active-to-Fail Containment Isolation Safety Seat Leakage Remote Position	A	Remote Position Indication, Exercise/ 2 Years Containment Isolation Leak Test Exercise Full Stroke/ Quarterly Operability Test	5 6
RCS-AOV-148	Pressurizer relief tank gas analyzer line containment isolation	Remote AO Globe	Maintain Close Transfer Close	Active-to-Fail Containment Isolation Safety Seat Leakage Remote Position	A	Remote Position Indication, Exercise/ 2 Years Containment Isolation Leak Test Exercise Full Stroke/ Quarterly Operability Test	5 6
RCS-VLV-140	Vacuum venting line check valve bypass	Manual	Maintain Close	Passive Containment Isolation Safety Seat Leakage	A	Containment Isolation Leak Test	5
	Pressurizer relief tank rupture disk	Rupture Disk	Transfer Open	Active	D	Device replacement/ 5 Years	
	Pressurizer relief tank rupture disk	Rupture Disk	Transfer Open	Active	D	Device replacement/ 5 Years	

Table 3.9-14 Valve Inservice Test Requirements (Sheet 6 of 124)

Valve Tag Number	Description	Valve/ Actuator Type	Safety-Related Missions	Safety Functions(2)	ASME IST Category	Inservice Testing Type and Frequency	IST Notes
CVS-AOV-001A	Letdown valve	Remote AO Globe	Transfer Close Maintain Close	Active-to-Fail Remote Position	B	Remote Position Indication, Exercise/ 2 Years Exercise Full Stroke/ Cold Shutdown Operability Test	4
CVS-AOV-001B	Letdown valve	Remote AO Globe	Transfer Close Maintain Close	Active-to-Fail Remote Position	B	Remote Position Indication, Exercise/ 2 Years Exercise Full Stroke/ Cold Shutdown Operability Test	4
CVS-AOV-001C	Letdown valve	Remote AO Globe	Transfer Close Maintain Close	Active-to-Fail Remote Position	B	Remote Position Indication, Exercise/ 2 Years Exercise Full Stroke/ Cold Shutdown Operability Test	4
CVS-LCV-361	Letdown line isolation	Remote AO Globe	Maintain Close Transfer Close	Active-to-Fail RCS Pressure Boundary Remote Position	B	Remote Position Indication, Exercise/ 2 Years Exercise Full Stroke/ Cold Shutdown Operability Test	4
CVS-LCV-362	Letdown line isolation	Remote AO Globe	Maintain Close Transfer Close	Active-to-Fail RCS Pressure Boundary Remote Position	B	Remote Position Indication, Exercise/ 2 Years Exercise Full Stroke/ Cold Shutdown Operability Test	4

Table 3.9-14 Valve Inservice Test Requirements (Sheet 7 of 124)

Valve Tag Number	Description	Valve/ Actuator Type	Safety-Related Missions	Safety Functions(2)	ASME IST Category	Inservice Testing Type and Frequency	IST Notes
CVS-AOV-005	Letdown containment isolation	Remote AO Globe	Maintain Close Transfer Close	Active-to-Fail Containment Isolation Safety Seat Leakage Remote Position	A	Remote Position Indication, Exercise/ 2 Years Containment Isolation Leak Test Exercise Full Stroke/ Cold Shutdown Operability Test	4 5
CVS-AOV-006	Letdown containment isolation	Remote AO Globe	Maintain Close Transfer Close	Active-to-Fail Containment Isolation Safety Seat Leakage Remote Position	A	Remote Position Indication, Exercise/ 2 Years Containment Isolation Leak Test Exercise Full Stroke/ Cold Shutdown Operability Test	4 5
CVS-MOV-152	Charging line containment isolation	Remote MO Gate	Maintain Close Transfer Close	Active Containment Isolation Safety Seat Leakage Remote Position	A	Remote Position Indication, Exercise/ 2 Years Containment Isolation Leak Test Exercise Full Stroke/ Cold Shutdown Operability Test	4 5
CVS-MOV-151	Charging line isolation	Remote MO Gate	Maintain Close Transfer Close	Active Remote Position	B	Remote Position Indication, Exercise/ 2 Years Exercise Full Stroke/ Cold Shutdown Operability Test	4

Table 3.9-14 Valve Inservice Test Requirements (Sheet 8 of 124)

Valve Tag Number	Description	Valve/ Actuator Type	Safety-Related Missions	Safety Functions(2)	ASME IST Category	Inservice Testing Type and Frequency	IST Notes
CVS-VLV-153	Charging line containment isolation check	Check	Maintain Close Transfer Close	Active Containment Isolation Safety Seat Leakage	AC	Containment Isolation Leak Test Check Exercise/ Refueling Outage	3 5
CVS-AOV-155	Auxiliary pressurizer spray line isolation	Remote AO Globe	Maintain Close Transfer Close	Active-to-Fail RCS Pressure Boundary Remote Position	B	Remote Position Indication, Exercise/ 2 Years Exercise Full Stroke/ Cold Shutdown Operability Test	4
CVS-VLV-156	Auxiliary pressurizer spray line check	Check	Maintain Close Transfer Close	Active RCS Pressure Boundary	BC	Check Exercise/ Refueling Outage	3
CVS-AOV-159	Charging line isolation	Remote AO Globe	Maintain Close Transfer Close Transfer Open	Active-to-Fail RCS Pressure Boundary Remote Position	B	Remote Position Indication, Exercise/ 2 Years Exercise Full Stroke/ Cold Shutdown Operability Test	4
CVS-VLV-161	Charging line check (First)	Check	Maintain Close Transfer Close	Active RCS Pressure Boundary	BC	Check Exercise/ Refueling Outage	3
CVS-VLV-160	Charging line check (Second)	Check	Maintain Close Transfer Close	Active RCS Pressure Boundary	BC	Check Exercise/ Refueling Outage	3

Table 3.9-14 Valve Inservice Test Requirements (Sheet 9 of 124)

Valve Tag Number	Description	Valve/ Actuator Type	Safety-Related Missions	Safety Functions(2)	ASME IST Category	Inservice Testing Type and Frequency	IST Notes
CVS-MOV-178A	Reactor coolant pump seal injection line containment isolation	Remote MO Globe	Maintain Close Transfer Close Maintain Open	Active Containment Isolation Safety Seat Leakage Remote Position	A	Remote Position Indication, Exercise/ 2 Years Containment Isolation Leak Test Exercise Full Stroke/ Cold Shutdown Operability Test	5 7
CVS-VLV-179A	Reactor coolant pump seal injection line containment isolation check	Check	Maintain Close Transfer Close Transfer Open Maintain Open	Active Containment Isolation Safety Seat Leakage	AC	Containment Isolation Leak Test Check Exercise/ Refueling Outage	3 5
CVS-MOV-178B	Reactor coolant pump seal injection line containment isolation	Remote MO Globe	Maintain Close Transfer Close Maintain Open	Active Containment Isolation Safety Seat Leakage Remote Position	A	Remote Position Indication, Exercise/ 2 Years Containment Isolation Leak Test Exercise Full Stroke/ Cold Shutdown Operability Test	5 7
CVS-VLV-179B	Reactor coolant pump seal injection line containment isolation check	Check	Maintain Close Transfer Close Transfer Open Maintain Open	Active Containment Isolation Safety Seat Leakage	AC	Containment Isolation Leak Test Check Exercise/ Refueling Outage	3 5

Table 3.9-14 Valve Inservice Test Requirements (Sheet 10 of 124)

Valve Tag Number	Description	Valve/ Actuator Type	Safety-Related Missions	Safety Functions(2)	ASME IST Category	Inservice Testing Type and Frequency	IST Notes
CVS-MOV-178C	Reactor coolant pump seal injection line containment isolation	Remote MO Globe	Maintain Close Transfer Close Maintain Open	Active Containment Isolation Safety Seat Leakage Remote Position	A	Remote Position Indication, Exercise/ 2 Years Containment Isolation Leak Test Exercise Full Stroke/ Cold Shutdown Operability Test	5 7
CVS-VLV-179C	Reactor coolant pump seal injection line containment isolation check	Check	Maintain Close Transfer Close Transfer Open Maintain Open	Active Containment Isolation Safety Seat Leakage	AC	Containment Isolation Leak Test Check Exercise/ Refueling Outage	3 5
CVS-MOV-178D	Reactor coolant pump seal injection line containment isolation	Remote MO Globe	Maintain Close Transfer Close Maintain Open	Active Containment Isolation Safety Seat Leakage Remote Position	A	Remote Position Indication, Exercise/ 2 Years Containment Isolation Leak Test Exercise Full Stroke/ Cold Shutdown Operability Test	5 7
CVS-VLV-179D	RCP seal injection line containment isolation check	Check	Maintain Close Transfer Close Transfer Open Maintain Open	Active Containment Isolation Safety Seat Leakage	AC	Containment Isolation Leak Test Check Exercise/ Refueling Outage	3 5

Table 3.9-14 Valve Inservice Test Requirements (Sheet 11 of 124)

Valve Tag Number	Description	Valve/ Actuator Type	Safety-Related Missions	Safety Functions(2)	ASME IST Category	Inservice Testing Type and Frequency	IST Notes
CVS-AOV-192A	Reactor coolant pump seal return line isolation	Remote AO Globe	Maintain Close Transfer Close	Active-to-Fail Remote Position	B	Remote Position Indication, Exercise/ 2 Years Exercise Full Stroke/ Cold Shutdown Operability Test	7
CVS-AOV-192B	Reactor coolant pump seal return line isolation	Remote AO Globe	Maintain Close Transfer Close	Active-to-Fail Remote Position	B	Remote Position Indication, Exercise/ 2 Years Exercise Full Stroke/ Cold Shutdown Operability Test	7
CVS-AOV-192C	Reactor coolant pump seal return line isolation	Remote AO Globe	Maintain Close Transfer Close	Active-to-Fail Remote Position	B	Remote Position Indication, Exercise/ 2 Years Exercise Full Stroke/ Cold Shutdown Operability Test	7
CVS-AOV-192D	Reactor coolant pump seal return line isolation	Remote AO Globe	Maintain Close Transfer Close	Active-to-Fail Remote Position	B	Remote Position Indication, Exercise/ 2 Years Exercise Full Stroke/ Cold Shutdown Operability Test	7
CVS-AOV-196A	Reactor coolant pump seal return line isolation	Remote AO Globe	Maintain Close Transfer Close	Active-to Fail Remote Position	B	Remote Position Indication, Exercise/ 2 Years Exercise Full Stroke/ Cold Shutdown Operability Test	7

Table 3.9-14 Valve Inservice Test Requirements (Sheet 12 of 124)

Valve Tag Number	Description	Valve/ Actuator Type	Safety-Related Missions	Safety Functions(2)	ASME IST Category	Inservice Testing Type and Frequency	IST Notes
CVS-AOV-196B	Reactor coolant pump seal return line isolation	Remote AO Globe	Maintain Close Transfer Close	Active-to Fail Remote Position	B	Remote Position Indication, Exercise/ 2 Years Exercise Full Stroke/ Cold Shutdown Operability Test	7
CVS-AOV-196C	Reactor coolant pump seal return line isolation	Remote AO Globe	Maintain Close Transfer Close	Active-to Fail Remote Position	B	Remote Position Indication, Exercise/ 2 Years Exercise Full Stroke/ Cold Shutdown Operability Test	7
CVS-AOV-196D	Reactor coolant pump seal return line isolation	Remote AO Globe	Maintain Close Transfer Close	Active-to Fail Remote Position	B	Remote Position Indication, Exercise/ 2 Years Exercise Full Stroke/ Cold Shutdown Operability Test	7
CVS-MOV-203	Reactor coolant pump seal return line containment isolation	Remote MO Globe	Transfer Close	Active Containment Isolation Safety Seat Leakage Remote Position	A	Remote Position Indication, Exercise/ 2 Years Containment Isolation Leak Test Exercise Full Stroke/ Cold Shutdown Operability Test	5 7

Table 3.9-14 Valve Inservice Test Requirements (Sheet 13 of 124)

Valve Tag Number	Description	Valve/ Actuator Type	Safety-Related Missions	Safety Functions(2)	ASME IST Category	Inservice Testing Type and Frequency	IST Notes
CVS-MOV-204	Reactor coolant pump seal return line containment isolation	Remote MO Globe	Transfer Close	Active Containment Isolation Safety Seat Leakage Remote Position	A	Remote Position Indication, Exercise/ 2 Years Containment Isolation Leak Test Exercise Full Stroke/ Cold Shutdown Operability Test	5 7
CVS-VLV-129A	Charging pump minimum flow check	Check	Maintain Open Transfer Open Transfer Close	Active	BC	Check Exercise/ Refueling Outage	3
CVS-VLV-129B	Charging pump minimum flow check	Check	Maintain Open Transfer Open Transfer Close	Active	BC	Check Exercise/ Refueling Outage	3
CVS-VLV-592	Charging pump alternate makeup line check	Check	Transfer Open	Active	BC	Check Exercise/ Refueling Outage	3
CVS-VLV-594	Charging pump alternate makeup line check	Check	Transfer Open	Active	BC	Check Exercise/ Refueling Outage	3
CVS-VLV-131A	Charging pump discharge check	Check	Maintain Open Transfer Open Transfer Close	Active	BC	Check Exercise/ Refueling Outage	3
CVS-VLV-131B	Charging pump discharge check	Check	Maintain Open Transfer Open Transfer Close	Active	BC	Check Exercise/ Refueling Outage	3
CVS-VLV-181A	Reactor coolant pump seal injection line check (First)	Check	Maintain Open Transfer Open Transfer Close Maintain Close	Active RCS Pressure Boundary	BC	Check Exercise/ Refueling Outage	3

Table 3.9-14 Valve Inservice Test Requirements (Sheet 14 of 124)

Valve Tag Number	Description	Valve/ Actuator Type	Safety-Related Missions	Safety Functions(2)	ASME IST Category	Inservice Testing Type and Frequency	IST Notes
CVS-VLV-181B	Reactor coolant pump seal injection line check (First)	Check	Maintain Open Transfer Open Transfer Close Maintain Close	Active RCS Pressure Boundary	BC	Check Exercise/ Refueling Outage	3
CVS-VLV-181C	Reactor coolant pump seal injection line check (First)	Check	Maintain Open Transfer Open Transfer Close Maintain Close	Active RCS Pressure Boundary	BC	Check Exercise/ Refueling Outage	3
CVS-VLV-181D	Reactor coolant pump seal injection line check (First)	Check	Maintain Open Transfer Open Transfer Close Maintain Close	Active RCS Pressure Boundary	BC	Check Exercise/ Refueling Outage	3
CVS-VLV-182A	Reactor coolant pump seal injection line check (Second)	Check	Maintain Open Transfer Open Transfer Close Maintain Close	Active RCS Pressure Boundary	BC	Check Exercise/ Refueling Outage	3
CVS-VLV-182B	Reactor coolant pump seal injection line check (Second)	Check	Maintain Open Transfer Open Transfer Close Maintain Close	Active RCS Pressure Boundary	BC	Check Exercise/ Refueling Outage	3
CVS-VLV-182C	Reactor coolant pump seal injection line check (Second)	Check	Maintain Open Transfer Open Transfer Close Maintain Close	Active RCS Pressure Boundary	BC	Check Exercise/ Refueling Outage	3
CVS-VLV-182D	Reactor coolant pump seal injection line check (Second)	Check	Maintain Open Transfer Open Transfer Close Maintain Close	Active RCS Pressure Boundary	BC	Check Exercise/ Refueling Outage	3

Table 3.9-14 Valve Inservice Test Requirements (Sheet 15 of 124)

Valve Tag Number	Description	Valve/ Actuator Type	Safety-Related Missions	Safety Functions(2)	ASME IST Category	Inservice Testing Type and Frequency	IST Notes
CVS-FCV-128	Primary makeup water supply isolation	Remote MO Gate	Transfer Close	Active Remote Position	B	Remote Position Indication, Exercise/ 2 Years Exercise Full Stroke/ Cold Shutdown Operability Test	6
CVS-FCV-129	Primary makeup water supply isolation	Remote MO Gate	Transfer Close	Active Remote Position	B	Remote Position Indication, Exercise/ 2 Years Exercise Full Stroke/ Cold Shutdown Operability Test	6
CVS-AOV-221	Excess letdown isolation (First)	Remote AO Globe	Maintain Close Transfer Close	Active-to-Fail RCS Pressure Boundary Remote Position	B	Remote Position Indication, Exercise/ 2 Years Exercise Full Stroke/ Cold Shutdown Operability Test	4
CVS-AOV-222	Excess letdown isolation (Second)	Remote AO Globe	Maintain Close Transfer Close	Active-to-Fail RCS Pressure Boundary Remote Position	B	Remote Position Indication, Exercise/ 2 Years Exercise Full Stroke/ Cold Shutdown Operability Test	4
CVS-SRV-002	Letdown line relief valve	Relief	Maintain Close Transfer Open Transfer Close	Active	BC	Class 2/3 Relief Valve Tests/10 Years and 20% in 4 Years	
CVS-SRV-201	Reactor coolant pump seal water return line relief valve	Relief	Maintain Close Transfer Open Transfer Close	Active	BC	Class 2/3 Relief Valve Tests/10 Years and 20% in 4 Years	

Table 3.9-14 Valve Inservice Test Requirements (Sheet 16 of 124)

Valve Tag Number	Description	Valve/ Actuator Type	Safety-Related Missions	Safety Functions(2)	ASME IST Category	Inservice Testing Type and Frequency	IST Notes
CVS-VLV-202	Reactor coolant pump seal return line containment isolation check	Check	Maintain Close Transfer Close	Active Containment Isolation Safety Seat Leakage	AC	Containment isolation Leak Test	5
SIS-MOV-001A	Safety injection pump suction isolation	Remote MO Gate	Maintain Open Maintain Close Transfer Close	Active Containment Isolation Remote Position	A	Remote Position Indication, Exercise/ 2 Years Leak Test/ Refueling Outage	
SIS-MOV-001B	Safety injection pump suction isolation	Remote MO Gate	Maintain Open Maintain Close Transfer Close	Active Containment Isolation Remote Position	A	Remote Position Indication, Exercise/ 2 Years Leak Test/ Refueling Outage	
SIS-MOV-001C	Safety injection pump suction isolation	Remote MO Gate	Maintain Open Maintain Close Transfer Close	Active Containment Isolation Remote Position	A	Remote Position Indication, Exercise/ 2 Years Leak Test/ Refueling Outage	
SIS-MOV-001D	Safety injection pump suction isolation	Remote MO Gate	Maintain Open Maintain Close Transfer Close	Active Containment Isolation Remote Position	A	Remote Position Indication, Exercise/ 2 Years Leak Test/ Refueling Outage	
SIS-VLV-004A	Safety injection pump discharge check	Check	Transfer Open	Active	BC	Check Exercise/ Refueling Outage	3
SIS-VLV-004B	Safety injection pump discharge check	Check	Transfer Open	Active	BC	Check Exercise/ Refueling Outage	3

Table 3.9-14 Valve Inservice Test Requirements (Sheet 17 of 124)

Valve Tag Number	Description	Valve/ Actuator Type	Safety-Related Missions	Safety Functions(2)	ASME IST Category	Inservice Testing Type and Frequency	IST Notes
SIS-VLV-004C	Safety injection pump discharge check	Check	Transfer Open	Active	BC	Check Exercise/ Refueling Outage	3
SIS-VLV-004D	Safety injection pump discharge check	Check	Transfer Open	Active	BC	Check Exercise/ Refueling Outage	3
SIS-MOV-009A	Safety injection pump discharge containment isolation	Remote MO Globe	Maintain Open Maintain Close Transfer Close	Active Containment Isolation Remote Position	A	Remote Position Indication, Exercise/ 2 Years Leak Test/ Refueling Outage Excercise Full Stroke/ Quarterly Operability Test	
SIS-MOV-009B	Safety injection pump discharge containment isolation	Remote MO Globe	Maintain Open Maintain Close Transfer Close	Active Containment Isolation Remote Position	A	Remote Position Indication, Exercise/ 2 Years Leak Test/ Refueling Outage Excercise Full Stroke/ Quarterly Operability Test	
SIS-MOV-009C	Safety injection pump discharge containment isolation	Remote MO Globe	Maintain Open Maintain Close Transfer Close	Active Containment Isolation Remote Position	A	Remote Position Indication, Exercise/ 2 Years Leak Test/ Refueling Outage Excercise Full Stroke/ Quarterly Operability Test	

Table 3.9-14 Valve Inservice Test Requirements (Sheet 18 of 124)

Valve Tag Number	Description	Valve/ Actuator Type	Safety-Related Missions	Safety Functions(2)	ASME IST Category	Inservice Testing Type and Frequency	IST Notes
SIS-MOV-009D	Safety injection pump discharge containment isolation	Remote MO Globe	Maintain Open Maintain Close Transfer Close	Active Containment Isolation Remote Position	A	Remote Position Indication, Exercise/ 2 Years Leak Test/ Refueling Outage Excercise Full Stroke/ Quarterly Operability Test	
SIS-VLV-010A	Safety injection pump discharge containment isolation check	Check	Maintain Close Transfer Open Transfer Close	Active Containment Isolation	AC	Leak Test/ Refueling Outage Check Exercise/ Refueling Outage	3
SIS-VLV-010B	Safety injection pump discharge containment isolation check	Check	Maintain Close Transfer Open Transfer Close	Active Containment Isolation	AC	Leak Test/ Refueling Outage Check Exercise/ Refueling Outage	3
SIS-VLV-010C	Safety injection pump discharge containment isolation check	Check	Maintain Close Transfer Open Transfer Close	Active Containment Isolation	AC	Leak Test/ Refueling Outage Check Exercise/ Refueling Outage	3
SIS-VLV-010D	Safety injection pump discharge containment isolation check	Check	Maintain Close Transfer Open Transfer Close	Active Containment Isolation	AC	Leak Test/ Refueling Outage Check Exercise/ Refueling Outage	3

Table 3.9-14 Valve Inservice Test Requirements (Sheet 19 of 124)

Valve Tag Number	Description	Valve/ Actuator Type	Safety-Related Missions	Safety Functions(2)	ASME IST Category	Inservice Testing Type and Frequency	IST Notes
SIS-MOV-011A	Direct vessel safety injection line isolation	Remote MO Globe	Maintain Open Maintain Close Transfer Close Transfer Open	Active Remote Position	B	Remote Position Indication, Exercise/ 2 Years Exercise Full Stroke/ Quarterly Operability Test	
SIS-MOV-011B	Direct vessel safety injection line isolation	Remote MO Globe	Maintain Open Maintain Close Transfer Close Transfer Open	Active Remote Position	B	Remote Position Indication, Exercise/ 2 Years Exercise Full Stroke/ Quarterly Operability Test	
SIS-MOV-011C	Direct vessel safety injection line isolation	Remote MO Globe	Maintain Open Maintain Close Transfer Close Transfer Open	Active Remote Position	B	Remote Position Indication, Exercise/ 2 Years Exercise Full Stroke/ Quarterly Operability Test	
SIS-MOV-011D	Direct vessel safety injection line isolation	Remote MO Globe	Maintain Open Maintain Close Transfer Close Transfer Open	Active Remote Position	B	Remote Position Indication, Exercise/ 2 Years Exercise Full Stroke/ Quarterly Operability Test	
SIS-VLV-012A	Direct vessel injection line check	Check	Maintain Close Transfer Open	Active RCS Pressure Boundary Safety Seat Leakage	AC	Check Exercise/ Refueling Outage Pressure Isolation Leak Test/ Refueling Outage	3

Table 3.9-14 Valve Inservice Test Requirements (Sheet 20 of 124)

Valve Tag Number	Description	Valve/ Actuator Type	Safety-Related Missions	Safety Functions(2)	ASME IST Category	Inservice Testing Type and Frequency	IST Notes
SIS-VLV-013A	Direct vessel injection line check	Check	Maintain Close Transfer Open	Active RCS Pressure Boundary Safety Seat Leakage	AC	Check Exercise/ Refueling Outage Pressure Isolation Leak Test/ Refueling Outage	3
SIS-VLV-012B	Direct vessel injection line check	Check	Maintain Close Transfer Open	Active RCS Pressure Boundary Safety Seat Leakage	AC	Check Exercise/ Refueling Outage Pressure Isolation Leak Test/ Refueling Outage	3
SIS-VLV-013B	Direct vessel injection line check	Check	Maintain Close Transfer Open	Active RCS Pressure Boundary Safety Seat Leakage	AC	Check Exercise/ Refueling Outage Pressure Isolation Leak Test/ Refueling Outage	3
SIS-VLV-012C	Direct vessel injection line check	Check	Maintain Close Transfer Open	Active RCS Pressure Boundary Safety Seat Leakage	AC	Check Exercise/ Refueling Outage Pressure Isolation Leak Test/ Refueling Outage	3
SIS-VLV-013C	Direct vessel injection line check	Check	Maintain Close Transfer Open	Active RCS Pressure Boundary Safety Seat Leakage	AC	Check Exercise/ Refueling Outage Pressure Isolation Leak Test/ Refueling Outage	3
SIS-VLV-012D	Direct vessel injection line check	Check	Maintain Close Transfer Open	Active RCS Pressure Boundary Safety Seat Leakage	AC	Check Exercise/ Refueling Outage Pressure Isolation Leak Test/ Refueling Outage	3

Table 3.9-14 Valve Inservice Test Requirements (Sheet 21 of 124)

Valve Tag Number	Description	Valve/ Actuator Type	Safety-Related Missions	Safety Functions(2)	ASME IST Category	Inservice Testing Type and Frequency	IST Notes
SIS-VLV-013D	Direct vessel injection line check	Check	Maintain Close Transfer Open	Active RCS Pressure Boundary Safety Seat Leakage	AC	Check Exercise/ Refueling Outage Pressure Isolation Leak Test/ Refueling Outage	3
SIS-MOV-014A	Hot leg injection line isolation	Remote MO Globe	Maintain Close Transfer Open	Active RCS Pressure Boundary Remote Position	A	Remote Position Indication, Exercise/ 2 Years Exercise Full Stroke/ Cold Shutdown Operability Test Leak Test/ Refueling Outage	8 15
SIS-MOV-014B	Hot leg injection line isolation	Remote MO Globe	Maintain Close Transfer Open	Active RCS Pressure Boundary Remote Position	A	Remote Position Indication, Exercise/ 2 Years Exercise Full Stroke/ Cold Shutdown Operability Test Leak Test/ Refueling Outage	8 15
SIS-MOV-014C	Hot leg injection line isolation	Remote MO Globe	Maintain Close Transfer Open	Active RCS Pressure Boundary Remote Position	A	Remote Position Indication, Exercise/ 2 Years Exercise Full Stroke/ Cold Shutdown Operability Test Leak Test/ Refueling Outage	8 15

Table 3.9-14 Valve Inservice Test Requirements (Sheet 22 of 124)

Valve Tag Number	Description	Valve/ Actuator Type	Safety-Related Missions	Safety Functions(2)	ASME IST Category	Inservice Testing Type and Frequency	IST Notes
SIS-MOV-014D	Hot leg injection line isolation	Remote MO Globe	Maintain Close Transfer Open	Active RCS Pressure Boundary Remote Position	A	Remote Position Indication, Exercise/ 2 Years Exercise Full Stroke/ Cold Shutdown Operability Test Leak Test/ Refueling Outage	8 15
SIS-VLV-015A	Hot leg injection line check	Check	Maintain Close Transfer Open	Active RCS Pressure Boundary Safety Seat Leakage	AC	Check Exercise/ Refueling Outage Pressure Isolation Leak Test/ Refueling Outage	3
SIS-VLV-015B	Hot leg injection line check	Check	Maintain Close Transfer Open	Active RCS Pressure Boundary Safety Seat Leakage	AC	Check Exercise/ Refueling Outage Pressure Isolation Leak Test/ Refueling Outage	3
SIS-VLV-015C	Hot leg injection line check	Check	Maintain Close Transfer Open	Active RCS Pressure Boundary Safety Seat Leakage	AC	Check Exercise/ Refueling Outage Pressure Isolation Leak Test/ Refueling Outage	3
SIS-VLV-015D	Hot leg recirculation line check	Check	Maintain Close Transfer Open	Active RCS Pressure Boundary Safety Seat Leakage	AC	Check Exercise/ Refueling Outage Pressure Isolation Leak Test/ Refueling Outage	3

Table 3.9-14 Valve Inservice Test Requirements (Sheet 23 of 124)

Valve Tag Number	Description	Valve/ Actuator Type	Safety-Related Missions	Safety Functions(2)	ASME IST Category	Inservice Testing Type and Frequency	IST Notes
SIS-MOV-031A	Emergency letdown line isolation (first)	Remote MO Gate	Maintain Close Transfer Open Transfer Close	Active RCS Pressure Boundary Remote Position	A	Remote Position Indication, Exercise/ 2 Years Exercise Full Stroke / Cold Shutdown Operability Test Leak Test/ Refueling Outage	2 15
SIS-MOV-031D	Emergency letdown line isolation (first)	Remote MO Gate	Maintain Close Transfer Open Transfer Close	Active RCS Pressure Boundary Remote Position	A	Remote Position Indication, Exercise/ 2 Years Exercise Full Stroke / Cold Shutdown Operability Test Leak Test/ Refueling Outage	2 15
SIS-MOV-032A	Emergency letdown line isolation (second)	Remote MO Globe	Maintain Close Transfer Open Transfer Close	Active RCS Pressure Boundary Remote Position	A	Remote Position Indication, Exercise/ 2 Years Exercise Full Stroke / Cold Shutdown Operability Test Leak Test/ Refueling Outage	2 15
SIS-MOV-032D	Emergency letdown line isolation (second)	Remote MO Globe	Maintain Close Transfer Open Transfer Close	Active RCS Pressure Boundary Remote Position	A	Remote Position Indication, Exercise/ 2 Years Exercise Full Stroke / Cold Shutdown Operability Test Leak Test/ Refueling Outage	2 15

Table 3.9-14 Valve Inservice Test Requirements (Sheet 24 of 124)

Valve Tag Number	Description	Valve/ Actuator Type	Safety-Related Missions	Safety Functions(2)	ASME IST Category	Inservice Testing Type and Frequency	IST Notes
SIS-MOV-101A	Accumulator discharge valve	Remote MO Gate	Maintain Open Transfer Open Transfer Close	Active Remote Position	B	Remote Position Indication, Exercise/ 2 Years Exercise Full Stroke / Hot Shutdown Operability Test	13
SIS-MOV-101B	Accumulator discharge valve	Remote MO Gate	Maintain Open Transfer Open Transfer Close	Active Remote Position	B	Remote Position Indication, Exercise/ 2 Years Exercise Full Stroke / Hot Shutdown Operability Test	13
SIS-MOV-101C	Accumulator discharge valve	Remote MO Gate	Maintain Open Transfer Open Transfer Close	Active Remote Position	B	Remote Position Indication, Exercise/ 2 Years Exercise Full Stroke / Hot Shutdown Operability Test	13
SIS-MOV-101D	Accumulator discharge valve	Remote MO Gate	Maintain Open Transfer Open Transfer Close	Active Remote Position	B	Remote Position Indication, Exercise/ 2 Years Exercise Full Stroke / Hot Shutdown Operability Test	13

Table 3.9-14 Valve Inservice Test Requirements (Sheet 25 of 124)

Valve Tag Number	Description	Valve/ Actuator Type	Safety-Related Missions	Safety Functions(2)	ASME IST Category	Inservice Testing Type and Frequency	IST Notes
SIS-VLV-102A	Accumulator injection line check	Check	Maintain Close Transfer Open	Active RCS Pressure Boundary Safety Seat Leakage	AC	Check Exercise /Refueling Outage Pressure Isolation Leak Test/ Refueling Outage	
SIS-VLV-103A	Accumulator injection line check	Check	Maintain Close Transfer Open	Active RCS Pressure Boundary Safety Seat Leakage	AC	Check Exercise /Refueling Outage Pressure Isolation Leak Test/ Refueling Outage	
SIS-VLV-102B	Accumulator injection line check	Check	Maintain Close Transfer Open	Active RCS Pressure Boundary Safety Seat Leakage	AC	Check Exercise /Refueling Outage Pressure Isolation Leak Test/ Refueling Outage	
SIS-VLV-103B	Accumulator injection line check	Check	Maintain Close Transfer Open	Active RCS Pressure Boundary Safety Seat Leakage	AC	Check Exercise /Refueling Outage Pressure Isolation Leak Test/ Refueling Outage	
SIS-VLV-102C	Accumulator injection line check	Check	Maintain Close Transfer Open	Active RCS Pressure Boundary Safety Seat Leakage	AC	Check Exercise /Refueling Outage Pressure Isolation Leak Test/ Refueling Outage	

Table 3.9-14 Valve Inservice Test Requirements (Sheet 26 of 124)

Valve Tag Number	Description	Valve/ Actuator Type	Safety-Related Missions	Safety Functions(2)	ASME IST Category	Inservice Testing Type and Frequency	IST Notes
SIS-VLV-103C	Accumulator injection line check	Check	Maintain Close Transfer Open	Active RCS Pressure Boundary Safety Seat Leakage	AC	Check Exercise /Refueling Outage Pressure Isolation Leak Test/ Refueling Outage	
SIS-VLV-102D	Accumulator injection line check	Check	Maintain Close Transfer Open	Active RCS Pressure Boundary Safety Seat Leakage	AC	Check Exercise /Refueling Outage Pressure Isolation Leak Test/ Refueling Outage	
SIS-VLV-103D	Accumulator injection line check	Check	Maintain Close Transfer Open	Active RCS Pressure Boundary Safety Seat Leakage	AC	Check Exercise /Refueling Outage Pressure Isolation Leak Test/ Refueling Outage	
SIS-AOV-114	Accumulator nitrogen supply containment isolation	Remote AO Globe	Maintain Close Transfer Close	Active-to-Fail Containment Isolation Safety Seat Leakage Remote Position	A	Remote Position Indication Exercise/2 years Containment Isolation Leak Test Exercise Full Stroke /Cold Shutdown Operability Test	5 6

Table 3.9-14 Valve Inservice Test Requirements (Sheet 27 of 124)

Valve Tag Number	Description	Valve/ Actuator Type	Safety-Related Missions	Safety Functions(2)	ASME IST Category	Inservice Testing Type and Frequency	IST Notes
SIS-VLV-115	Accumulator nitrogen supply containment isolation check	Check	Maintain Close Transfer Close	Active Containment Isolation Safety Seat Leakage	AC	Containment Isolation Leak Test Check Exercise/ Refueling Outage	5 3
SIS-SRV-116	Accumulator nitrogen supply header safety valve	Relief	Maintain Close Transfer Open Transfer Close	Active	BC	Class 2/3 Relief Valve Tests/10 Years and 20% in 4 Years	
SIS-MOV-121A	Accumulator nitrogen discharge valve	Remote MO Globe	Transfer Open	Active Remote Position	B	Remote Position Indication, Exercise/ 2 Years Exercise Full Stroke / Quarterly Operability Test	
SIS-MOV-121B	Accumulator nitrogen discharge valve	Remote MO Globe	Transfer Open	Active Remote Position	B	Remote Position Indication, Exercise/ 2 Years Exercise Full Stroke / Quarterly Operability Test	
SIS-MOV-125A	Accumulator nitrogen supply line isolation	Remote MO Globe	Maintain Close Transfer Open	Active Remote Position	B	Remote Position Indication, Exercise/ 2 Years Exercise Full Stroke / Cold Shutdown Operability Test	9

Table 3.9-14 Valve Inservice Test Requirements (Sheet 28 of 124)

Valve Tag Number	Description	Valve/ Actuator Type	Safety-Related Missions	Safety Functions(2)	ASME IST Category	Inservice Testing Type and Frequency	IST Notes
SIS-MOV-125B	Accumulator nitrogen supply line isolation	Remote MO Globe	Maintain Close Transfer Open	Active Remote Position	B	Remote Position Indication, Exercise/ 2 Years Exercise Full Stroke / Cold Shutdown Operability Test	9
SIS-MOV-125C	Accumulator nitrogen supply line isolation	Remote MO Globe	Maintain Close Transfer Open	Active Remote Position	B	Remote Position Indication, Exercise/ 2 Years Exercise Full Stroke / Cold Shutdown Operability Test	9
SIS-MOV-125D	Accumulator nitrogen supply line isolation	Remote MO Globe	Maintain Close Transfer Open	Active Remote Position	B	Remote Position Indication, Exercise/ 2 Years Exercise Full Stroke / Cold Shutdown Operability Test	9
SIS-SRV-126A	Accumulator safety valve	Relief	Maintain Close Transfer Open Transfer Close	Active	BC	Class 2/3 Relief Valve Tests/10 Years and 20% in 4 Years	
SIS-SRV-126B	Accumulator safety valve	Relief	Maintain Close Transfer Open Transfer Close	Active	BC	Class 2/3 Relief Valve Tests/10 Years and 20% in 4 Years	
SIS-SRV-126C	Accumulator safety valve	Relief	Maintain Close Transfer Open Transfer Close	Active	BC	Class 2/3 Relief Valve Tests/10 Years and 20% in 4 Years	
SIS-SRV-126D	Accumulator safety valve	Relief	Maintain Close Transfer Open Transfer Close	Active	BC	Class 2/3 Relief Valve Tests/10 Years and 20% in 4 Years	

Table 3.9-14 Valve Inservice Test Requirements (Sheet 29 of 124)

Valve Tag Number	Description	Valve/ Actuator Type	Safety-Related Missions	Safety Functions(2)	ASME IST Category	Inservice Testing Type and Frequency	IST Notes
RHS-MOV-001A	Containment spray/residual heat removal pump hot leg isolation Inner	Remote MO Gate	Maintain Close Transfer Close Transfer Open	Active RCS Pressure Boundary Safety Seat Leakage Remote Position	A	Remote Position Indication, Exercise/ 2 Years Exercise Full Stroke/ Cold Shutdown Pressure Isolation Leak Test/ Refueling Outage Operability Test	8 15
RHS-MOV-002A	Containment spray/residual heat removal pump hot leg isolation Outer	Remote MO Gate	Maintain Close Transfer Close Transfer Open	Active RCS Pressure Boundary Containment Isolation Safety Seat Leakage Remote Position	A	Remote Position Indication, Exercise/ 2 Years Exercise Full Stroke/ Cold Shutdown Pressure Isolation Leak Test/ Refueling Outage Operability Test	8 10 15
RHS-MOV-001B	Containment spray/residual heat removal pump hot leg isolation - Inner	Remote MO Gate	Maintain Close Transfer Close Transfer Open	Active RCS Pressure Boundary Safety Seat Leakage Remote Position	A	Remote Position Indication, Exercise/ 2 Years Exercise Full Stroke/ Cold Shutdown Pressure Isolation Leak Test/ Refueling Outage Operability Test	8 15

Table 3.9-14 Valve Inservice Test Requirements (Sheet 30 of 124)

Valve Tag Number	Description	Valve/ Actuator Type	Safety-Related Missions	Safety Functions(2)	ASME IST Category	Inservice Testing Type and Frequency	IST Notes
RHS-MOV-002B	Containment spray/residual heat removal pump hot leg isolation - outer	Remote MO Gate	Maintain Close Transfer Close Transfer Open	Active RCS Pressure Boundary Containment Isolation Safety Seat Leakage Remote Position	A	Remote Position Indication, Exercise/ 2 Years Exercise Full Stroke/ Cold Shutdown Pressure Isolation Leak Test/ Refueling Outage Operability Test	8 10 15
RHS-MOV-001C	Containment spray/residual heat removal pump hot leg isolation inner	Remote MO Gate	Maintain Close Transfer Close Transfer Open	Active RCS Pressure Boundary Safety Seat Leakage Remote Position	A	Remote Position Indication, Exercise/ 2 Years Exercise Full Stroke/ Cold Shutdown Pressure Isolation Leak Test/ Refueling Outage Operability Test	8 15
RHS-MOV-002C	Containment spray/residual heat removal pump hot leg isolation outer	Remote MO Gate	Maintain Close Transfer Close Transfer Open	Active RCS Pressure Boundary Containment Isolation Safety Seat Leakage Remote Position	A	Remote Position Indication, Exercise/ 2 Years Exercise Full Stroke/ Cold Shutdown Pressure Isolation Leak Test/ Refueling Outage Operability Test	8 10 15

Table 3.9-14 Valve Inservice Test Requirements (Sheet 31 of 124)

Valve Tag Number	Description	Valve/ Actuator Type	Safety-Related Missions	Safety Functions(2)	ASME IST Category	Inservice Testing Type and Frequency	IST Notes
RHS-MOV-001D	Containment spray/residual heat removal pump hot leg isolation inner	Remote MO Gate	Maintain Close Transfer Close Transfer Open	Active RCS Pressure Boundary Safety Seat Leakage Remote Position	A	Remote Position Indication, Exercise/ 2 Years Exercise Full Stroke/ Cold Shutdown Pressure Isolation Leak Test/ Refueling Outage Operability Test	8 15
RHS-MOV-002D	Containment spray/residual heat removal pump hot leg isolation outer	Remote MO Gate	Maintain Close Transfer Close Transfer Open	Active RCS Pressure Boundary Containment Isolation Safety Seat Leakage Remote Position	A	Remote Position Indication, Exercise/ 2 Years Exercise Full Stroke/ Cold Shutdown Pressure Isolation Leak Test/ Refueling Outage Operability Test	8 10 15
RHS-SRV-003A	Containment spray/residual heat removal pump suction relief	Relief	Maintain Close Transfer Open Transfer Close	Active Containment Isolation	BC	Class 2/3 Relief Valve Tests/10 Years and 20% in 4 Years	10
RHS-SRV-003B	Containment spray/residual heat removal pump suction relief	Relief	Maintain Close Transfer Open Transfer Close	Active Containment Isolation	BC	Class 2/3 Relief Valve Tests/10 Years and 20% in 4 Years	10

Table 3.9-14 Valve Inservice Test Requirements (Sheet 32 of 124)

Valve Tag Number	Description	Valve/ Actuator Type	Safety-Related Missions	Safety Functions(2)	ASME IST Category	Inservice Testing Type and Frequency	IST Notes
RHS-SRV-003C	Containment spray/residual heat removal pump suction relief	Relief	Maintain Close Transfer Open Transfer Close	Active Containment Isolation	BC	Class 2/3 Relief Valve Tests/10 Years and 20% in 4 Years	10
RHS-SRV-003D	Containment spray/residual heat removal pump suction relief	Relief	Maintain Close Transfer Open Transfer Close	Active Containment Isolation	BC	Class 2/3 Relief Valve Tests/10 Years and 20% in 4 Years	10
RHS-MOV-021A	Containment spray/residual heat removal pump discharge line containment isolation	Remote MO Gate	Maintain Close Transfer Close Transfer Open	Active Containment Isolation Remote Position	B	Remote Position Indication, Exercise/ 2 Years Exercise Full Stroke/ Quarterly Operability Test	10
RHS-MOV-021B	Containment spray/residual heat removal pump discharge line containment isolation	Remote MO Gate	Maintain Close Transfer Close Transfer Open	Active Containment Isolation Remote Position	B	Remote Position Indication, Exercise/ 2 Years Exercise Full Stroke/ Quarterly Operability Test	10
RHS-MOV-021C	Containment spray/residual heat removal pump discharge line containment isolation	Remote MO Gate	Maintain Close Transfer Close Transfer Open	Active Containment Isolation Remote Position	B	Remote Position Indication, Exercise/ 2 Years Exercise Full Stroke/ Quarterly Operability Test	10

Table 3.9-14 Valve Inservice Test Requirements (Sheet 33 of 124)

Valve Tag Number	Description	Valve/ Actuator Type	Safety-Related Missions	Safety Functions(2)	ASME IST Category	Inservice Testing Type and Frequency	IST Notes
RHS-MOV-021D	Containment spray/residual heat removal pump discharge line containment isolation	Remote MO Gate	Maintain Close Transfer Close Transfer Open	Active Containment Isolation Remote Position	B	Remote Position Indication, Exercise/ 2 Years Exercise Full Stroke/ Quarterly Operability Test	10
RHS-VLV-022A	Containment spray/residual heat removal pump discharge line containment isolation check	Check	Maintain Close Transfer Open Transfer Close	Active Containment Isolation	BC	Check Exercise/ Refueling Outage	3 10
RHS-VLV-022B	Containment spray/residual heat removal pump discharge line containment isolation check	Check	Maintain Close Transfer Open Transfer Close	Active Containment Isolation	BC	Check Exercise/ Refueling Outage	3 10
RHS-VLV-022C	Containment spray/residual heat removal pump discharge line containment isolation check	Check	Maintain Close Transfer Open Transfer Close	Active Containment Isolation	BC	Check Exercise/ Refueling Outage	3 10
RHS-VLV-022D	Containment spray/residual heat removal pump discharge line containment isolation check	Check	Maintain Close Transfer Open Transfer Close	Active Containment Isolation	BC	Check Exercise/ Refueling Outage	3 10

Table 3.9-14 Valve Inservice Test Requirements (Sheet 34 of 124)

Valve Tag Number	Description	Valve/ Actuator Type	Safety-Related Missions	Safety Functions(2)	ASME IST Category	Inservice Testing Type and Frequency	IST Notes
RHS-SRV-023A	Containment spray/residual heat removal heat exchanger outlet relief	Relief	Maintain Close Transfer Open Transfer Close	Active	BC	Class 2/3 Relief Valve Tests/10 Years and 20% in 4 Years	
RHS-SRV-023B	Containment spray/residual heat removal heat exchanger outlet relief	Relief	Maintain Close Transfer Open Transfer Close	Active	BC	Class 2/3 Relief Valve Tests/10 Years and 20% in 4 Years	
RHS-SRV-023C	Containment spray/residual heat removal heat exchanger outlet relief	Relief	Maintain Close Transfer Open Transfer Close	Active	BC	Class 2/3 Relief Valve Tests/10 Years and 20% in 4 Years	
RHS-SRV-023D	Containment spray/residual heat removal heat exchanger outlet relief	Relief	Maintain Close Transfer Open Transfer Close	Active	BC	Class 2/3 Relief Valve Tests/10 Years and 20% in 4 Years	
RHS-MOV-025A	Containment spray/residual heat removal pump full-flow test line stop	Remote MO Globe	Maintain Close Transfer Open Transfer Close	Active Remote Position	B	Remote Position Indication, Exercise/ 2 Years Exercise Full Stroke/ Quarterly Operability Test	
RHS-MOV-025B	Containment spray/residual heat removal pump full-flow test line stop	Remote MO Globe	Maintain Close Transfer Open Transfer Close	Active Remote Position	B	Remote Position Indication, Exercise/ 2 Years Exercise Full Stroke/ Quarterly Operability Test	

Table 3.9-14 Valve Inservice Test Requirements (Sheet 35 of 124)

Valve Tag Number	Description	Valve/ Actuator Type	Safety-Related Missions	Safety Functions(2)	ASME IST Category	Inservice Testing Type and Frequency	IST Notes
RHS-MOV-025C	Containment spray/residual heat removal pump full-flow test line stop	Remote MO Globe	Maintain Close Transfer Open Transfer Close	Active Remote Position	B	Remote Position Indication, Exercise/ 2 Years Exercise Full Stroke/ Quarterly Operability Test	
RHS-MOV-025D	Containment spray/residual heat removal pump full-flow test line stop	Remote MO Globe	Maintain Close Transfer Open Transfer Close	Active Remote Position	B	Remote Position Indication, Exercise/ 2 Years Exercise Full Stroke/ Quarterly Operability Test	
RHS-MOV-026A	Residual heat removal flow control	Remote MO Globe	Maintain Close Transfer Open Transfer Close	Active Remote Position	B	Remote Position Indication, Exercise/ 2 Years Exercise Full Stroke/ Cold Shutdown Operability Test	8
RHS-MOV-026B	Residual heat removal flow control	Remote MO Globe	Maintain Close Transfer Open Transfer Close	Active Remote Position	B	Remote Position Indication, Exercise/ 2 Years Exercise Full Stroke/ Cold Shutdown Operability Test	8
RHS-MOV-026C	Residual heat removal flow control	Remote MO Globe	Maintain Close Transfer Open Transfer Close	Active Remote Position	B	Remote Position Indication, Exercise/ 2 Years Exercise Full Stroke/ Cold Shutdown Operability Test	8

Table 3.9-14 Valve Inservice Test Requirements (Sheet 36 of 124)

Valve Tag Number	Description	Valve/ Actuator Type	Safety-Related Missions	Safety Functions(2)	ASME IST Category	Inservice Testing Type and Frequency	IST Notes
RHS-MOV-026D	Residual heat removal flow control	Remote MO Globe	Maintain Close Transfer Open Transfer Close	Active Remote Position	B	Remote Position Indication, Exercise/ 2 Years Exercise Full Stroke/ Cold Shutdown Operability Test	8
RHS-VLV-027A	Residual heat removal(RHR) discharge line check	Check	Maintain Close Transfer Open	Active RCS Pressure Boundary Safety Seat Leakage	AC	Check Exercise/ Refueling Outage Pressure Isolation Leak Test/ Refueling Outage	3
RHS-VLV-027B	RHR discharge line check	Check	Maintain Close Transfer Open	Active RCS Pressure Boundary Safety Seat Leakage	AC	Check Exercise/ Refueling Outage Pressure Isolation Leak Test/ Refueling Outage	3
RHS-VLV-027C	RHR discharge line check	Check	Maintain Close Transfer Open	Active RCS Pressure Boundary Safety Seat Leakage	AC	Check Exercise/ Refueling Outage Pressure Isolation Leak Test/ Refueling Outage	3
RHS-VLV-027D	RHR discharge line check	Check	Maintain Close Maintain Open	Active RCS Pressure Boundary Safety Seat Leakage	AC	Check Exercise/ Refueling Outage Pressure Isolation Leak Test/ Refueling Outage	3
RHS-VLV-028A	RHR discharge line check	Check	Transfer Open	Active RCS Pressure Boundary Safety Seat Leakage	AC	Check Exercise/ Refueling Outage Pressure Isolation Leak Test/ Refueling Outage	3

Table 3.9-14 Valve Inservice Test Requirements (Sheet 37 of 124)

Valve Tag Number	Description	Valve/ Actuator Type	Safety-Related Missions	Safety Functions(2)	ASME IST Category	Inservice Testing Type and Frequency	IST Notes
RHS-VLV-028B	RHR discharge line check	Check	Transfer Open	Active RCS Pressure Boundary Safety Seat Leakage	AC	Check Exercise/ Refueling Outage Pressure Isolation Leak Test/ Refueling Outage	3
RHS-VLV-028C	RHR discharge line check	Check	Transfer Open	Active RCS Pressure Boundary Safety Seat Leakage	AC	Check Exercise/ Refueling Outage Pressure Isolation Leak Test/ Refueling Outage	3
RHS-VLV-028D	RHR discharge line check	Check	Transfer Open	Active RCS Pressure Boundary Safety Seat Leakage	AC	Check Exercise/ Refueling Outage Pressure Isolation Leak Test/ Refueling Outage	3
RHS-VLV-004A	Containment spray/residual heat removal pump suction line check	Check	Maintain Close Transfer Open	Active	BC	Check Exercise/ Refueling Outage	3
RHS-VLV-004B	Containment spray/residual heat removal pump suction line check	Check	Maintain Close Transfer Open	Active	BC	Check Exercise/ Refueling Outage	3
RHS-VLV-004C	Containment spray/residual heat removal pump suction line check	Check	Maintain Close Transfer Open	Active	BC	Check Exercise/ Refueling Outage	3

Table 3.9-14 Valve Inservice Test Requirements (Sheet 38 of 124)

Valve Tag Number	Description	Valve/ Actuator Type	Safety-Related Missions	Safety Functions(2)	ASME IST Category	Inservice Testing Type and Frequency	IST Notes
RHS-VLV-004D	Containment spray/residual heat removal pump suction line check	Check	Maintain Close Transfer Open	Active	BC	Check Exercise/ Refueling Outage	3
EFS-MOV-019A	Emergency feed water isolation	Remote MO Gate	Maintain Open Transfer Open Transfer Close Maintain Close	Active Containment Isolation Safety Seat Leakage Remote Position	B	Remote Position Indication, Exercise/ 2 Years Exercise Full Stroke/ Quarterly Operability Test	
EFS-MOV-019B	Emergency feed water isolation	Remote MO Gate	Maintain Open Transfer Open Transfer Close Maintain Close	Active Containment Isolation Safety Seat Leakage Remote Position	B	Remote Position Indication, Exercise/ 2 Years Exercise Full Stroke/ Quarterly Operability Test	
EFS-MOV-019C	Emergency feed water isolation	Remote MO Gate	Maintain Open Transfer Open Transfer Close Maintain Close	Active Containment Isolation Safety Seat Leakage Remote Position	B	Remote Position Indication, Exercise/ 2 Years Exercise Full Stroke/ Quarterly Operability Test	
EFS-MOV-019D	Emergency feed water isolation	Remote MO Gate	Maintain Open Transfer Open Transfer Close Maintain Close	Active Containment Isolation Safety Seat Leakage Remote Position	B	Remote Position Indication, Exercise/ 2 Years Exercise Full Stroke/ Quarterly Operability Test	

Table 3.9-14 Valve Inservice Test Requirements (Sheet 39 of 124)

Valve Tag Number	Description	Valve/ Actuator Type	Safety-Related Missions	Safety Functions(2)	ASME IST Category	Inservice Testing Type and Frequency	IST Notes
EFS-MOV-017A	Emergency feed water control	Remote MO Gate	Maintain Open Transfer Open Transfer Close	Active Remote Position	B	Remote Position Indication, Exercise/ 2 Years Exercise Full Stroke/ Quarterly Operability Test	
EFS-MOV-017B	Emergency feed water control	Remote MO Globe	Maintain Open Transfer Open Transfer Close	Active Remote Position	B	Remote Position Indication, Exercise/ 2 Years Exercise Full Stroke/ Quarterly Operability Test	
EFS-MOV-017C	Emergency feed water control	Remote MO Globe	Maintain Open Transfer Open Transfer Close	Active Remote Position	B	Remote Position Indication, Exercise/ 2 Years Exercise Full Stroke/ Quarterly Operability Test	
EFS-MOV-017D	Emergency feed water control	Remote MO Globe	Maintain Open Transfer Open Transfer Close	Active Remote Position	B	Remote Position Indication, Exercise/ 2 Years Exercise Full Stroke/ Quarterly Operability Test	
EFS-MOV-103A	Turbine driven emergency feed water pump steam inlet	Remote MO Gate	Transfer Open Transfer Close	Active Remote Position	B	Remote Position Indication, Exercise/ 2 Years Exercise Full Stroke/ Quarterly Operability Test	

Table 3.9-14 Valve Inservice Test Requirements (Sheet 40 of 124)

Valve Tag Number	Description	Valve/ Actuator Type	Safety-Related Missions	Safety Functions(2)	ASME IST Category	Inservice Testing Type and Frequency	IST Notes
EFS-MOV-103B	Turbine driven emergency feed water pump steam inlet	Remote MO Gate	Transfer Open Transfer Close	Active Remote Position	B	Remote Position Indication, Exercise/ 2 Years Exercise Full Stroke/ Quarterly Operability Test	
EFS-MOV-103C	Turbine driven emergency feed water pump steam inlet	Remote MO Gate	Transfer Open Transfer Close	Active Remote Position	B	Remote Position Indication, Exercise/ 2 Years Exercise Full Stroke/ Quarterly Operability Test	
EFS-MOV-103D	Turbine driven emergency feed water pump steam inlet	Remote MO Gate	Transfer Open Transfer Close	Active Remote Position	B	Remote Position Indication, Exercise/ 2 Years Exercise Full Stroke/ Quarterly Operability Test	
EFS-MOV-101A	Turbine driven emergency feed water pump steam supply line isolation	Remote MO Gate	Maintain Open Maintain Close Transfer Close	Active Containment Isolation Safety Seat Leakage Remote Position	B	Remote Position Indication, Exercise/ 2 Years Exercise Full Stroke/ Quarterly Operability Test	
EFS-MOV-101B	Turbine driven emergency feed water pump steam supply line isolation	Remote MO Gate	Maintain Open Maintain Close Transfer Close	Active Containment Isolation Safety Seat Leakage Remote Position	B	Remote Position Indication, Exercise/ 2 Years Exercise Full Stroke/ Quarterly Operability Test	

Table 3.9-14 Valve Inservice Test Requirements (Sheet 41 of 124)

Valve Tag Number	Description	Valve/ Actuator Type	Safety-Related Missions	Safety Functions(2)	ASME IST Category	Inservice Testing Type and Frequency	IST Notes
EFS-MOV-101C	Turbine driven emergency feed water pump steam supply line isolation	Remote MO Gate	Maintain Open Maintain Close Transfer Close	Active Containment Isolation Safety Seat Leakage Remote Position	B	Remote Position Indication, Exercise/ 2 Years Exercise Full Stroke/ Quarterly Operability Test	
EFS-MOV-101D	Turbine driven emergency feed water pump steam supply line isolation	Remote MO Gate	Maintain Open Maintain Close Transfer Close	Active Containment Isolation Safety Seat Leakage Remote Position	B	Remote Position Indication, Exercise/ 2 Years Exercise Full Stroke/ Quarterly Operability Test	
EFS-MOV-006A	Emergency feedwater pump suction tieline isolation	Remote MO Gate	Maintain Close Transfer Open Transfer Close	Active Remote Position	B	Remote Position Indication, Exercise/ 2 Years Exercise Full Stroke/ Quarterly Operability Test	
EFS-MOV-006B	Emergency feedwater pump suction tieline isolation	Remote MO Gate	Maintain Close Transfer Open Transfer Close	Active Remote Position	B	Remote Position Indication, Exercise/ 2 Years Exercise Full Stroke/ Quarterly Operability Test	
EFS-MOV-031	EFW supply line to SFP isolation	Remote MO Gate	Maintain Close Transfer Open Transfer Close	Active Remote Position	B	Remote Position Indication, Exercise/ 2 Years Exercise Full Stroke/ Quarterly Operability Test	

Table 3.9-14 Valve Inservice Test Requirements (Sheet 42 of 124)

Valve Tag Number	Description	Valve/ Actuator Type	Safety-Related Missions	Safety Functions(2)	ASME IST Category	Inservice Testing Type and Frequency	IST Notes
EFS-VLV-008A	Emergency feed water pit outlet check	Check	Transfer Open	Active	BC	Check Exercise/ Refueling Outage	3
EFS-VLV-008B	Emergency feed water pit outlet check	Check	Transfer Open	Active	BC	Check Exercise/ Refueling Outage	3
EFS-VLV-012A	Emergency feed water pump discharge check	Check	Transfer Open Transfer Close	Active	BC	Check Exercise/ Refueling Outage	3
EFS-VLV-012B	Emergency feed water pump discharge check	Check	Transfer Open Transfer Close	Active	BC	Check Exercise/ Refueling Outage	3
EFS-VLV-012C	Emergency feed water pump discharge check	Check	Transfer Open Transfer Close	Active	BC	Check Exercise/ Refueling Outage	3
EFS-VLV-012D	Emergency feed water pump discharge check	Check	Transfer Open Transfer Close	Active	BC	Check Exercise/ Refueling Outage	3
EFS-VLV-020A	Emergency feed water pump minimum flow line check	Check	Transfer Open Transfer Close	Active	BC	Check Exercise/ Refueling Outage	3
EFS-VLV-020B	Emergency feed water pump minimum flow line check	Check	Transfer Open Transfer Close	Active	BC	Check Exercise/ Refueling Outage	3

Table 3.9-14 Valve Inservice Test Requirements (Sheet 43 of 124)

Valve Tag Number	Description	Valve/ Actuator Type	Safety-Related Missions	Safety Functions(2)	ASME IST Category	Inservice Testing Type and Frequency	IST Notes
EFS-VLV-020C	Emergency feed water pump minimum flow line check	Check	Transfer Open Transfer Close	Active	BC	Check Exercise/ Refueling Outage	3
EFS-VLV-020D	Emergency feed water pump minimum flow line check	Check	Transfer Open Transfer Close	Active	BC	Check Exercise/ Refueling Outage	3
EFS-VLV-018A	Emergency feed water feeding line check	Check	Transfer Open Transfer Close Maintain Close	Active	C	Check Exercise/ Refueling Outage	3
EFS-VLV-018B	Emergency feed water feeding line check	Check	Transfer Open Transfer Close Maintain Close	Active	C	Check Exercise/ Refueling Outage	3
EFS-VLV-018C	Emergency feed water feeding line check	Check	Transfer Open Transfer Close Maintain Close	Active	C	Check Exercise/ Refueling Outage	3
EFS-VLV-018D	Emergency feed water feeding line check	Check	Transfer Open Transfer Close Maintain Close	Active	C	Check Exercise/ Refueling Outage	3
EFS-VLV-102A	Emergency feed water pump steam feeding line check	Check	Transfer Open Transfer Close Maintain Close	Active	BC	Check Exercise/ Refueling Outage	3
EFS-VLV-102B	Emergency feed water pump steam feeding line check	Check	Transfer Open Transfer Close Maintain Close	Active	BC	Check Exercise/ Refueling Outage	3

Table 3.9-14 Valve Inservice Test Requirements (Sheet 44 of 124)

Valve Tag Number	Description	Valve/ Actuator Type	Safety-Related Missions	Safety Functions(2)	ASME IST Category	Inservice Testing Type and Frequency	IST Notes
EFS-VLV-102C	Emergency feed water pump steam feeding line check	Check	Transfer Open Transfer Close Maintain Close	Active	BC	Check Exercise/ Refueling Outage	3
EFS-VLV-102D	Emergency feed water pump steam feeding line check	Check	Transfer Open Transfer Close Maintain Close	Active	BC	Check Exercise/ Refueling Outage	3
EFS-VLV-109A	Turbine driven emergency feedwater pump steam supply drain line check	Check	Transfer Open Transfer Close	Active	BC	Check Exercise/ Refueling Outage	
EFS-VLV-109B	Turbine driven emergency feedwater pump steam supply drain line check	Check	Transfer Open Transfer Close	Active	BC	Check Exercise/ Refueling Outage	
EFS-VLV-109C	Turbine driven emergency feedwater pump steam supply drain line check	Check	Transfer Open Transfer Close	Active	BC	Check Exercise/ Refueling Outage	
EFS-VLV-109D	Turbine driven emergency feedwater pump steam supply drain line check	Check	Transfer Open Transfer Close	Active	BC	Check Exercise/ Refueling Outage	
FWS-VLV-511A	Main feedwater check	Check	Transfer Close Maintain Close	Active	BC	Check Exercise/ Refueling Outage	3

Table 3.9-14 Valve Inservice Test Requirements (Sheet 45 of 124)

Valve Tag Number	Description	Valve/ Actuator Type	Safety-Related Missions	Safety Functions(2)	ASME IST Category	Inservice Testing Type and Frequency	IST Notes
FWS-VLV-511B	Main feedwater check	Check	Transfer Close Maintain Close	Active	BC	Check Exercise/ Refueling Outage	3
FWS-VLV-511C	Main feedwater check	Check	Transfer Close Maintain Close	Active	BC	Check Exercise/ Refueling Outage	3
FWS-VLV-511D	Main feedwater check	Check	Transfer Close Maintain Close	Active	BC	Check Exercise/ Refueling Outage	3
FWS-SMV-512A	Main feed water isolation	System medium actuated Gate (using valve inside pressure to close)	Maintain Close Transfer Close	Active Active-to-Fail Containment Isolation Remote Position	B	Remote Position Indication, Exercise/2 Years Exercise Full Stroke/ Hot Standby Operability Test	11

Table 3.9-14 Valve Inservice Test Requirements (Sheet 46 of 124)

Valve Tag Number	Description	Valve/ Actuator Type	Safety-Related Missions	Safety Functions(2)	ASME IST Category	Inservice Testing Type and Frequency	IST Notes
FWS-SMV-512B	Main feed water isolation	System medium actuated Gate (using valve inside pressure to close)	Maintain Close Transfer Close	Active Active-to-Fail Containment Isolation Remote Position	B	Remote Position Indication, Exercise/2 Years Exercise Full Stroke/ Hot Standby Operability Test	11
FWS-SMV-512C	Main feed water isolation	System medium actuated Gate (using valve inside pressure to close)	Maintain Close Transfer Close	Active Active-to-Fail Containment Isolation Remote Position	B	Remote Position Indication, Exercise/2 Years Exercise Full Stroke/ Hot Standby Operability Test	11
FWS-SMV-512D	Main feed water isolation	System medium actuated Gate (using valve inside pressure to close)	Maintain Close Transfer Close	Active Active-to-Fail Containment Isolation Remote Position	B	Remote Position Indication, Exercise/2 Years Exercise Full Stroke/ Hot Standby Operability Test	11
FWS-FCV-510, 520, 530, 540	Main feed water regulation	Remote AO Globe	Transfer Close	Active-to-Fail Remote Position	B	Remote Position Indication, Exercise/2 Years Exercise Full Stroke/ Cold Shutdown Operability Test	4

Table 3.9-14 Valve Inservice Test Requirements (Sheet 47 of 124)

Valve Tag Number	Description	Valve/ Actuator Type	Safety-Related Missions	Safety Functions(2)	ASME IST Category	Inservice Testing Type and Frequency	IST Notes
FWS-FCV-511, 521, 531, 541	Main feed water bypass regulation	Remote AO Globe	Transfer Close	Active-to-Fail Remote Position	B	Remote Position Indication, Exercise/2 Years Exercise Full Stroke/ Cold Shutdown Operability Test	4
FWS-LCV-610, 620, 630, 640	Steam generator water filling control	Remote AO Globe	Transfer Close	Active-to-Fail Remote Position	B	Remote Position Indication, Exercise/2 Years Exercise Full Stroke/ Cold Shutdown Operability Test	4
(Deleted)							
(Deleted)							
MSS-MOV-507A	Main steam relief valve block	Remote MO Gate	Maintain Close Transfer Close Maintain Open	Active Containment Isolation Remote Position	B	Remote Position Indication, Exercise/2 Years Exercise Full Stroke/ Quarterly Operability Test	
MSS-MOV-507B	Main steam relief valve block	Remote MO Gate	Maintain Close Transfer Close Maintain Open	Active Containment Isolation Remote Position	B	Remote Position Indication, Exercise/2 Years Exercise Full Stroke/ Quarterly Operability Test	

Table 3.9-14 Valve Inservice Test Requirements (Sheet 48 of 124)

Valve Tag Number	Description	Valve/ Actuator Type	Safety-Related Missions	Safety Functions(2)	ASME IST Category	Inservice Testing Type and Frequency	IST Notes
MSS-MOV-507C	Main steam relief valve block	Remote MO Gate	Maintain Close Transfer Close Maintain Open	Active Containment Isolation Remote Position	B	Remote Position Indication, Exercise/2 Years Exercise Full Stroke/ Quarterly Operability Test	
MSS-MOV-507D	Main steam relief valve block	Remote MO Gate	Maintain Close Transfer Close Maintain Open	Active Containment Isolation Remote Position	B	Remote Position Indication, Exercise/2 Years Exercise Full Stroke/ Quarterly Operability Test	
MSS-MOV-508A	Main steam depressurization valve	Remote MO Globe	Transfer Open Transfer Close	Active Remote Position	B	Remote Position Indication, Exercise/2 Years Exercise Full Stroke/ Cold Shutdown Operability Test	4
MSS-MOV-508B	Main steam depressurization valve	Remote MO Globe	Transfer Open Transfer Close	Active Remote Position	B	Remote Position Indication, Exercise/2 Years Exercise Full Stroke/ Cold Shutdown Operability Test	4

Table 3.9-14 Valve Inservice Test Requirements (Sheet 49 of 124)

Valve Tag Number	Description	Valve/ Actuator Type	Safety-Related Missions	Safety Functions(2)	ASME IST Category	Inservice Testing Type and Frequency	IST Notes
MSS-MOV-508C	Main steam depressurization valve	Remote MO Globe	Transfer Open Transfer Close	Active Remote Position	B	Remote Position Indication, Exercise/2 Years Exercise Full Stroke/ Cold Shutdown Operability Test	4
MSS-MOV-508D	Main steam depressurization valve	Remote MO Globe	Transfer Open Transfer Close	Active Remote Position	B	Remote Position Indication, Exercise/2 Years Exercise Full Stroke/ Cold Shutdown Operability Test	4
MSS-SMV-515A	Main steam isolation	System medium actuated Gate (using valve inside pressure to close)	Maintain Close Transfer Close	Active-to-Fail Containment Isolation Remote Position	B	Remote Position Indication, Exercise/2 Years Exercise Full Stroke/ Hot Standby Operability Test	11

Table 3.9-14 Valve Inservice Test Requirements (Sheet 50 of 124)

Valve Tag Number	Description	Valve/ Actuator Type	Safety-Related Missions	Safety Functions(2)	ASME IST Category	Inservice Testing Type and Frequency	IST Notes
MSS-SMV-515B	Main steam isolation	System medium actuated Gate (using valve inside pressure to close)	Maintain Close Transfer Close	Active-to-Fail Containment Isolation Remote Position	B	Remote Position Indication, Exercise/2 Years Exercise Full Stroke/ Hot Standby Operability Test	11
MSS-SMV-515C	Main steam isolation	System medium actuated Gate (using valve inside pressure to close)	Maintain Close Transfer Close	Active-to-Fail Containment Isolation Remote Position	B	Remote Position Indication, Exercise/2 Years Exercise Full Stroke/ Hot Standby Operability Test	11
MSS-SMV-515D	Main steam isolation	System medium actuated Gate (using valve inside pressure to close)	Maintain Close Transfer Close	Active-to-Fail Containment Isolation Remote Position	B	Remote Position Indication, Exercise/2 Years Exercise Full Stroke/ Hot standby Operability Test	11

Table 3.9-14 Valve Inservice Test Requirements (Sheet 51 of 124)

Valve Tag Number	Description	Valve/ Actuator Type	Safety-Related Missions	Safety Functions(2)	ASME IST Category	Inservice Testing Type and Frequency	IST Notes
MSS-HCV-565	Main steam bypass isolation	Remote AO Globe	Maintain Close Transfer Close	Active-To-Fail Containment Isolation Remote Position	B	Remote Position Indication, Exercise/2 Years Exercise Full Stroke/ Cold Shutdown Operability Test	4
MSS-HCV-575	Main steam bypass isolation valve	Remote AO Globe	Maintain Close Transfer Close	Active-To-Fail Containment Isolation Remote Position	B	Remote Position Indication, Exercise/2 Years Exercise Full Stroke/ Cold Shutdown Operability Test	4
MSS-HCV-585	Main steam bypass isolation	Remote AO Globe	Maintain Close Transfer Close	Active-To-Fail Containment Isolation Remote Position	B	Remote Position Indication, Exercise/2 Years Exercise Full Stroke/ Cold Shutdown Operability Test	4
MSS-HCV-595	Main steam bypass isolation	Remote AO Globe	Maintain Close Transfer Close	Active-To-Fail Containment Isolation Remote Position	B	Remote Position Indication, Exercise/2 Years Exercise Full Stroke/ Cold Shutdown Operability Test	4
MSS-SRV-509A	Main steam safety valve	Relief	Maintain Close Transfer Open Transfer Close	Active Containment Isolation Remote Position	BC	Remote Position Indication, Alternate/2 Years Class 2/3 Relief Valve Tests/5 Years and 20% in 2 Years	1

Table 3.9-14 Valve Inservice Test Requirements (Sheet 52 of 124)

Valve Tag Number	Description	Valve/ Actuator Type	Safety-Related Missions	Safety Functions(2)	ASME IST Category	Inservice Testing Type and Frequency	IST Notes
MSS-SRV-510A	Main steam safety valve	Relief	Maintain Close Transfer Open Transfer Close	Active Containment Isolation Remote Position	BC	Remote Position Indication, Alternate/2 Years Class 2/3 Relief Valve Tests/5 Years and 20% in 2 Years	1
MSS-SRV-511A	Main steam safety valve	Relief	Maintain Close Transfer Open Transfer Close	Active Containment Isolation Remote Position	BC	Remote Position Indication, Alternate/2 Years Class 2/3 Relief Valve Tests/5 Years and 20% in 2 Years	1
MSS-SRV-512A	Main steam safety valve	Relief	Maintain Close Transfer Open Transfer Close	Active Containment Isolation Remote Position	BC	Remote Position Indication, Alternate/2 Years Class 2/3 Relief Valve Tests/5 Years and 20% in 2 Years	1
MSS-SRV-513A	Main steam safety valve	Relief	Maintain Close Transfer Open Transfer Close	Active Containment Isolation Remote Position	BC	Remote Position Indication, Alternate/2 Years Class 2/3 Relief Valve Tests/5 Years and 20% in 2 Years	1
MSS-SRV-514A	Main steam safety valve	Relief	Maintain Close Transfer Open Transfer Close	Active Containment Isolation Remote Position	BC	Remote Position Indication, Alternate/2 Years Class 2/3 Relief Valve Tests/5 Years and 20% in 2 Years	1

Table 3.9-14 Valve Inservice Test Requirements (Sheet 53 of 124)

Valve Tag Number	Description	Valve/ Actuator Type	Safety-Related Missions	Safety Functions(2)	ASME IST Category	Inservice Testing Type and Frequency	IST Notes
MSS-SRV-509B	Main steam safety valve	Relief	Maintain Close Transfer Open Transfer Close	Active Containment Isolation Remote Position	BC	Remote Position Indication, Alternate/2 Years Class 2/3 Relief Valve Tests/5 Years and 20% in 2 Years	1
MSS-SRV-510B	Main steam safety valve	Relief	Maintain Close Transfer Open Transfer Close	Active Containment Isolation Remote Position	BC	Remote Position Indication, Alternate/2 Years Class 2/3 Relief Valve Tests/5 Years and 20% in 2 Years	1
MSS-SRV-511B	Main steam safety valve	Relief	Maintain Close Transfer Open Transfer Close	Active Containment Isolation Remote Position	BC	Remote Position Indication, Alternate/2 Years Class 2/3 Relief Valve Tests/5 Years and 20% in 2 Years	1
MSS-SRV-512B	Main steam safety valve	Relief	Maintain Close Transfer Open Transfer Close	Active Containment Isolation Remote Position	BC	Remote Position Indication, Alternate/2 Years Class 2/3 Relief Valve Tests/5 Years and 20% in 2 Years	1
MSS-SRV-513B	Main steam safety valve	Relief	Maintain Close Transfer Open Transfer Close	Active Containment Isolation Remote Position	BC	Remote Position Indication, Alternate/2 Years Class 2/3 Relief Valve Tests/5 Years and 20% in 2 Years	1

Table 3.9-14 Valve Inservice Test Requirements (Sheet 54 of 124)

Valve Tag Number	Description	Valve/ Actuator Type	Safety-Related Missions	Safety Functions(2)	ASME IST Category	Inservice Testing Type and Frequency	IST Notes
MSS-SRV-514B	Main steam safety valve	Relief	Maintain Close Transfer Open Transfer Close	Active Containment Isolation Remote Position	BC	Remote Position Indication, Alternate/2 Years Class 2/3 Relief Valve Tests/5 Years and 20% in 2 Years	1
MSS-SRV-509C	Main steam safety valve	Relief	Maintain Close Transfer Open Transfer Close	Active Containment Isolation Remote Position	BC	Remote Position Indication, Alternate/2 Years Class 2/3 Relief Valve Tests/5 Years and 20% in 2 Years	1
MSS-SRV-510C	Main steam safety valve	Relief	Maintain Close Transfer Open Transfer Close	Active Containment Isolation Remote Position	BC	Remote Position Indication, Alternate/2 Years Class 2/3 Relief Valve Tests/5 Years and 20% in 2 Years	1
MSS-SRV-511C	Main steam safety valve	Relief	Maintain Close Transfer Open Transfer Close	Active Containment Isolation Remote Position	BC	Remote Position Indication, Alternate/2 Years Class 2/3 Relief Valve Tests/5 Years and 20% in 2 Years	1
MSS-SRV-512C	Main steam safety valve	Relief	Maintain Close Transfer Open Transfer Close	Active Containment Isolation Remote Position	BC	Remote Position Indication, Alternate/2 Years Class 2/3 Relief Valve Tests/5 Years and 20% in 2 Years	1

Table 3.9-14 Valve Inservice Test Requirements (Sheet 55 of 124)

Valve Tag Number	Description	Valve/ Actuator Type	Safety-Related Missions	Safety Functions(2)	ASME IST Category	Inservice Testing Type and Frequency	IST Notes
MSS-SRV-513C	Main steam safety valve	Relief	Maintain Close Transfer Open Transfer Close	Active Containment Isolation Remote Position	BC	Remote Position Indication, Alternate/2 Years Class 2/3 Relief Valve Tests/5 Years and 20% in 2 Years	1
MSS-SRV-514C	Main steam safety valve	Relief	Maintain Close Transfer Open Transfer Close	Active Containment Isolation Remote Position	BC	Remote Position Indication, Alternate/2 Years Class 2/3 Relief Valve Tests/5 Years and 20% in 2 Years	1
MSS-SRV-509D	Main steam safety valve	Relief	Maintain Close Transfer Open Transfer Close	Active Containment Isolation Remote Position	BC	Remote Position Indication, Alternate/2 Years Class 2/3 Relief Valve Tests/5 Years and 20% in 2 Years	1
MSS-SRV-510D	Main steam safety valve	Relief	Maintain Close Transfer Open Transfer Close	Active Containment Isolation Remote Position	BC	Remote Position Indication, Alternate/2 Years Class 2/3 Relief Valve Tests/5 Years and 20% in 2 Years	1
MSS-SRV-511D	Main steam safety valve	Relief	Maintain Close Transfer Open Transfer Close	Active Containment Isolation Remote Position	BC	Remote Position Indication, Alternate/2 Years Class 2/3 Relief Valve Tests/5 Years and 20% in 2 Years	1

Table 3.9-14 Valve Inservice Test Requirements (Sheet 56 of 124)

Valve Tag Number	Description	Valve/ Actuator Type	Safety-Related Missions	Safety Functions(2)	ASME IST Category	Inservice Testing Type and Frequency	IST Notes
MSS-SRV-512D	Main steam safety valve	Relief	Maintain Close Transfer Open Transfer Close	Active Containment Isolation Remote Position	BC	Remote Position Indication, Alternate/2 Years Class 2/3 Relief Valve Tests/5 Years and 20% in 2 Years	1
MSS-SRV-513D	Main steam safety valve	Relief	Maintain Close Transfer Open Transfer Close	Active Containment Isolation Remote Position	BC	Remote Position Indication, Alternate/2 Years Class 2/3 Relief Valve Tests/5 Years and 20% in 2 Years	1
MSS-SRV-514D	Main steam safety valve	Relief	Maintain Close Transfer Open Transfer Close	Active Containment Isolation Remote Position	BC	Remote Position Indication, Alternate/2 Years Class 2/3 Relief Valve Tests/5 Years and 20% in 2 Years	1
MSS-VLV-516A	Main steam check	Check	Maintain Close Transfer Close	Active	B	Check Exercise (Alternative method) /Cold Shutdown (of sufficient duration)	12
MSS-VLV-516B	Main steam check	Check	Maintain Close Transfer Close	Active	B	Check Exercise (Alternative method) /Cold Shutdown (of sufficient duration)	12
MSS-VLV-516C	Main steam check	Check	Maintain Close Transfer Close	Active	B	Check Exercise (Alternative method) /Cold Shutdown (of sufficient duration)	12

Table 3.9-14 Valve Inservice Test Requirements (Sheet 57 of 124)

Valve Tag Number	Description	Valve/ Actuator Type	Safety-Related Missions	Safety Functions(2)	ASME IST Category	Inservice Testing Type and Frequency	IST Notes
MSS-VLV-516D	Main steam check	Check	Maintain Close Transfer Close	Active	B	Check Exercise (Alternative method) /Cold Shutdown (of sufficient duration)	12
MSS-MOV-701A	Main steam drain line isolation	Remote MO Globe	Maintain Close Transfer Close	Active Containment Isolation Remote Position	B	Remote Position Indication, Exercise/2 Years Exercise Full Stroke/ Cold Shutdown Operability Test	6
MSS-MOV-701B	Main steam drain line isolation	Remote MO Globe	Maintain Close Transfer Close	Active Containment Isolation Remote Position	B	Remote Position Indication, Exercise/2 Years Exercise Full Stroke/ Cold Shutdown Operability Test	6
MSS-MOV-701C	Main steam drain line isolation	Remote MO Globe	Maintain Close Transfer Close	Active Containment Isolation Remote Position	B	Remote Position Indication, Exercise/2 Years Exercise Full Stroke/ Cold Shutdown Operability Test	6
MSS-MOV-701D	Main steam drain line isolation	Remote MO Globe	Maintain Close Transfer Close	Active Containment Isolation Remote Position	B	Remote Position Indication, Exercise/2 Years Exercise Full Stroke/ Cold Shutdown Operability Test	6

Table 3.9-14 Valve Inservice Test Requirements (Sheet 58 of 124)

Valve Tag Number	Description	Valve/ Actuator Type	Safety-Related Missions	Safety Functions(2)	ASME IST Category	Inservice Testing Type and Frequency	IST Notes
CSS-MOV-001A	Containment spray/residual heat removal pump suction isolation (refueling water storage pit side)	Remote MO Gate	Maintain Open Maintain Close Transfer Close	Active Containment Isolation Remote Position	B	Remote Position Indication, Exercise/2 Years Exercise Full Stroke/ Quarterly Operability Test	
CSS-MOV-001B	Containment spray/residual heat removal pump suction isolation (refueling water storage pit side)	Remote MO Gate	Maintain Open Maintain Close Transfer Close	Active Containment Isolation Remote Position	B	Remote Position Indication, Exercise/2 Years Exercise Full Stroke/ Quarterly Operability Test	
CSS-MOV-001C	Containment spray/residual heat removal pump suction isolation (refueling water storage pit side)	Remote MO Gate	Maintain Open Maintain Close Transfer Close	Active Containment Isolation Remote Position	B	Remote Position Indication, Exercise/2 Years Exercise Full Stroke/ Quarterly Operability Test	
CSS-MOV-001D	Containment spray/residual heat removal pump suction isolation (refueling water storage pit side)	Remote MO Gate	Maintain Open Maintain Close Transfer Close	Active Containment Isolation Remote Position	B	Remote Position Indication, Exercise/2 Years Exercise Full Stroke/ Quarterly Operability Test	

Table 3.9-14 Valve Inservice Test Requirements (Sheet 59 of 124)

Valve Tag Number	Description	Valve/ Actuator Type	Safety-Related Missions	Safety Functions(2)	ASME IST Category	Inservice Testing Type and Frequency	IST Notes
CSS-MOV-004A	Containment spray header containment isolation	Remote MO Gate	Maintain Close Transfer Open Transfer Close	Active Containment Isolation Remote Position Safety Seat Leakage	A	Remote Position Indication, Exercise/2 Years Exercise Full Stroke/ Quarterly Operability Test Leak Test/ Refueling Outage	
CSS-MOV-004B	Containment spray header containment isolation	Remote MO Gate	Maintain Close Transfer Open Transfer Close	Active Containment Isolation Remote Position Safety Seat Leakage	A	Remote Position Indication, Exercise/2 Years Exercise Full Stroke/ Quarterly Operability Test Leak Test/ Refueling Outage	
CSS-MOV-004C	Containment spray header containment isolation	Remote MO Gate	Maintain Close Transfer Open Transfer Close	Active Containment Isolation Remote Position Safety Seat Leakage	A	Remote Position Indication, Exercise/2 Years Exercise Full Stroke/ Quarterly Operability Test Leak Test/ Refueling Outage	
CSS-MOV-004D	Containment spray header containment isolation	Remote MO Gate	Maintain Close Transfer Open Transfer Close	Active Containment Isolation Remote Position Safety Seat Leakage	A	Remote Position Indication, Exercise/2 Years Exercise Full Stroke/ Quarterly Operability Test Leak Test/ Refueling Outage	

Table 3.9-14 Valve Inservice Test Requirements (Sheet 60 of 124)

Valve Tag Number	Description	Valve/ Actuator Type	Safety-Related Missions	Safety Functions(2)	ASME IST Category	Inservice Testing Type and Frequency	IST Notes
CSS-VLV-005A	Containment spray header containment isolation	Check	Maintain Close Transfer Open Transfer Close	Active Containment Isolation	AC	Check Exercise /Refueling Outage	
CSS-VLV-005B	Containment spray header containment isolation	Check	Maintain Close Transfer Open Transfer Close	Active Containment Isolation	AC	Check Exercise /Refueling Outage	
CSS-VLV-005C	Containment spray header containment isolation	Check	Maintain Close Transfer Open Transfer Close	Active Containment Isolation	AC	Check Exercise /Refueling Outage	
CSS-VLV-005D	Containment spray header containment isolation	Check	Maintain Close Transfer Open Transfer Close	Active Containment Isolation	AC	Check Exercise /Refueling Outage	
NCS-MOV-007A	Train return header separation	Remote MO Gate	Maintain Close Transfer Close Transfer Open Maintain Open	Active Remote Position Safety Seat Leakage	A	Remote Position Indication, Exercise/2 Years Train separation portion Isolation Leak Test Exercise Full Stroke/ Refueling Outage Operability Test	7

Table 3.9-14 Valve Inservice Test Requirements (Sheet 61 of 124)

Valve Tag Number	Description	Valve/ Actuator Type	Safety-Related Missions	Safety Functions(2)	ASME IST Category	Inservice Testing Type and Frequency	IST Notes
NCS-MOV-007B	Train return header separation	Remote MO Gate	Maintain Close Transfer Close Transfer Open Maintain Open	Active Remote Position Safety Seat Leakage	A	Remote Position Indication, Exercise/2 Years Train separation portion Isolation Leak Test Exercise Full Stroke/ Refueling Outage Operability Test	7
NCS-MOV-007C	Train return header separation	Remote MO Gate	Maintain Close Transfer Close Transfer Open Maintain Open	Active Remote Position Safety Seat Leakage	A	Remote Position Indication, Exercise/2 Years Train separation portion Isolation Leak Test Exercise Full Stroke/ Refueling Outage Operability Test	7
NCS-MOV-007D	Train return header separation	Remote MO Gate	Maintain Close Transfer Close Transfer Open Maintain Open	Active Remote Position Safety Seat Leakage	A	Remote Position Indication, Exercise/2 Years Train separation portion Isolation Leak Test Exercise Full Stroke/ Refueling Outage Operability Test	7

Table 3.9-14 Valve Inservice Test Requirements (Sheet 62 of 124)

Valve Tag Number	Description	Valve/ Actuator Type	Safety-Related Missions	Safety Functions(2)	ASME IST Category	Inservice Testing Type and Frequency	IST Notes
NCS-MOV-020A	Train supply header separation	Remote MO Gate	Maintain Close Transfer Close Transfer Open Maintain Open	Active Remote Position Safety Seat Leakage	A	Remote Position Indication, Exercise/2 Years Train separation portion Isolation Leak Test Exercise Full Stroke/ Refueling Outage Operability Test	7
NCS-MOV-020B	Train supply header separation	Remote MO Gate	Maintain Close Transfer Close Transfer Open Maintain Open	Active Remote Position Safety Seat Leakage	A	Remote Position Indication, Exercise/2 Years Train separation portion Isolation Leak Test Exercise Full Stroke/ Refueling Outage Operability Test	7
NCS-MOV-020C	Train supply header separation	Remote MO Gate	Maintain Close Transfer Close Transfer Open Maintain Open	Active Remote Position Safety Seat Leakage	A	Remote Position Indication, Exercise/2 Years Train separation portion Isolation Leak Test Exercise Full Stroke/ Refueling Outage Operability Test	7

Table 3.9-14 Valve Inservice Test Requirements (Sheet 63 of 124)

Valve Tag Number	Description	Valve/ Actuator Type	Safety-Related Missions	Safety Functions(2)	ASME IST Category	Inservice Testing Type and Frequency	IST Notes
NCS-MOV-020D	Train supply header separation	Remote MO Gate	Maintain Close Transfer Close Transfer Open Maintain Open	Active Remote Position Safety Seat Leakage	A	Remote Position Indication, Exercise/2 Years Train separation portion Isolation Leak Test Exercise Full Stroke/ Refueling Outage Operability Test	7
NCS-MOV-145A	Containment spray/residual heat exchanger component cooling water isolation	Remote MO Gate	Maintain Close Transfer Open Transfer Close	Active Remote Position	B	Remote Position Indication, Exercise/2 Years Exercise Full Stroke/ Quarterly Operability Test	
NCS-MOV-145B	Containment spray/residual heat exchanger component cooling water isolation	Remote MO Gate	Maintain Close Transfer Open Transfer Close	Active Remote Position	B	Remote Position Indication, Exercise/2 Years Exercise Full Stroke/ Quarterly Operability Test	
NCS-MOV-145C	Containment spray/residual heat exchanger component cooling water isolation	Remote MO Gate	Maintain Close Transfer Open Transfer Close	Active Remote Position	B	Remote Position Indication, Exercise/2 Years Exercise Full Stroke/ Quarterly Operability Test	
NCS-MOV-145D	Containment spray/residual heat exchanger component cooling water isolation	Remote MO Gate	Maintain Close Transfer Open Transfer Close	Active Remote Position	B	Remote Position Indication, Exercise/2 Years Exercise Full Stroke/ Quarterly Operability Test	

Table 3.9-14 Valve Inservice Test Requirements (Sheet 64 of 124)

Valve Tag Number	Description	Valve/ Actuator Type	Safety-Related Missions	Safety Functions(2)	ASME IST Category	Inservice Testing Type and Frequency	IST Notes
NCS-MOV-146A	Containment spray/residual heat exchanger component cooling water isolation	Remote MO Gate	Maintain Open Transfer Close Transfer Open	Active Remote Position	B	Remote Position Indication, Exercise/2 Years Exercise Full Stroke/ Quarterly Operability Test	
NCS-MOV-146B	Containment spray/residual heat exchanger component cooling water isolation	Remote MO Gate	Maintain Open Transfer Close Transfer Open	Active Remote Position	B	Remote Position Indication, Exercise/2 Years Exercise Full Stroke/ Quarterly Operability Test	
NCS-MOV-146C	Containment spray/residual heat exchanger component cooling water isolation	Remote MO Gate	Maintain Open Transfer Close Transfer Open	Active Remote Position	B	Remote Position Indication, Exercise/2 Years Exercise Full Stroke/ Quarterly Operability Test	
NCS-MOV-146D	Containment spray/residual heat exchanger component cooling water isolation	Remote MO Gate	Maintain Open Transfer Close Transfer Open	Active Remote Position	B	Remote Position Indication, Exercise/2 Years Exercise Full Stroke/ Quarterly Operability Test	
NCS-VLV-306A	Charging pump CCW supply line check valve	Check	Transfer Open	Active	C	Check Exercise/ Refueling Outage	3
NCS-VLV-306B	Charging pump CCW supply line check valve	Check	Transfer Open	Active	C	Check Exercise/ Refueling Outage	3

Table 3.9-14 Valve Inservice Test Requirements (Sheet 65 of 124)

Valve Tag Number	Description	Valve/ Actuator Type	Safety-Related Missions	Safety Functions(2)	ASME IST Category	Inservice Testing Type and Frequency	IST Notes
NCS-MOV-316A	Charger Pump component cooling water return	Remote MO Gate	Maintain Open	Remote Position	B	Remote Position Indication, Exercise/2 Years Exercise Full Stroke/ Quarterly Operability Test	
NCS-MOV-316B	Charger Pump component cooling water return	Remote MO Gate	Maintain Open	Remote Position	B	Remote Position Indication, Exercise/2 Years Exercise Full Stroke/ Quarterly Operability Test	
NCS-MOV-511	Excess letdown heat exchanger component cooling water supply containment isolation	Remote MO Gate	Maintain Close Transfer Close	Active Containment Isolation Safety Seat Leakage Remote Position	A	Remote Position Indication, Exercise/2 Years Containment Isolation Leak Test Exercise Full Stroke/ Quarterly Operability Test	5
NCS-MOV-517	Excess letdown heat exchanger component cooling water return containment isolation	Remote MO Gate	Maintain Close Transfer Close	Active Containment Isolation Safety Seat Leakage Remote Position	A	Remote Position Indication, Exercise/2 Years Containment Isolation Leak Test Exercise Full Stroke/ Quarterly Operability Test	5

Table 3.9-14 Valve Inservice Test Requirements (Sheet 66 of 124)

Valve Tag Number	Description	Valve/ Actuator Type	Safety-Related Missions	Safety Functions(2)	ASME IST Category	Inservice Testing Type and Frequency	IST Notes
NCS-MOV-531	Letdown heat exchanger component cooling water supply containment isolation	Remote MO Gate	Maintain Close Transfer Close	Active Containment Isolation Safety Seat Leakage Remote Position	A	Remote Position Indication, Exercise/2 Years Containment Isolation Leak Test Exercise Full Stroke/ Cold Shutdown Operability Test	4 5
NCS-MOV-537	Letdown heat exchanger component cooling water return containment isolation	Remote MO Gate	Maintain Close Transfer Close	Active Containment Isolation Safety Seat Leakage Remote Position	A	Remote Position Indication, Exercise/2 Years Containment Isolation Leak Test Exercise Full Stroke/ Cold Shutdown Operability Test	4 5
NCS-VLV-231A	A, B-reactor coolant pump supply line check	Check	Maintain Open Transfer Close	Active	BC	Check Exercise/ Refueling Outage	3
NCS-VLV-231B	A, B-reactor coolant pump supply line check	Check	Maintain Open Transfer Close	Active	BC	Check Exercise/ Refueling Outage	3

Table 3.9-14 Valve Inservice Test Requirements (Sheet 67 of 124)

Valve Tag Number	Description	Valve/ Actuator Type	Safety-Related Missions	Safety Functions(2)	ASME IST Category	Inservice Testing Type and Frequency	IST Notes
NCS-MOV-232A	Cross-connection between A,B-reactor coolant pump and C,D-reactor coolant pump component cooling water supply line isolation	Remote MO Gate	Maintain Close Transfer Open	Active Remote Position	B	Remote Position Indication, Exercise/2 Years Exercise Full Stroke/ Cold Shutdown Operability Test	7
NCS-MOV-232B	Cross-connection between A,B-reactor coolant pump and C,D-reactor coolant pump component cooling water supply line isolation	Remote MO Gate	Maintain Close Transfer Open	Active Remote Position	B	Remote Position Indication, Exercise/2 Years Exercise Full Stroke/ Cold Shutdown Operability Test	7
NCS-MOV-233A	Cross-connection between A,B-reactor coolant pump and C,D-reactor coolant pump component cooling water return line isolation	Remote MO Gate	Maintain Close Transfer Open	Active Remote Position	B	Remote Position Indication, Exercise/2 Years Exercise Full Stroke/ Cold Shutdown Operability Test	7

Table 3.9-14 Valve Inservice Test Requirements (Sheet 68 of 124)

Valve Tag Number	Description	Valve/ Actuator Type	Safety-Related Missions	Safety Functions(2)	ASME IST Category	Inservice Testing Type and Frequency	IST Notes
NCS-MOV-233B	Cross-connection between A,B-reactor coolant pump and C,D-reactor coolant pump component cooling water return line isolation	Remote MO Gate	Maintain Close Transfer Open	Active Remote Position	B	Remote Position Indication, Exercise/2 Years Exercise Full Stroke/ Cold Shutdown Operability Test	7
NCS-MOV-234A	A,B-reactor coolant pump return line valve	Remote MO Gate	Maintain Open Transfer Close	Active Remote Position	B	Remote Position Indication, Exercise/2 Years Exercise Full Stroke/ Cold Shutdown Operability Test	7
NCS-MOV-234B	A,B-reactor coolant pump return line valve	Remote MO Gate	Maintain Open Transfer Close	Active Remote Position	B	Remote Position Indication, Exercise/2 Years Exercise Full Stroke/ Cold Shutdown Operability Test	7
NCS-MOV-402A	Reactor coolant pump component cooling water supply containment isolation	Remote MO Gate	Maintain Close Transfer Close Transfer Open Maintain Open	Active Containment Isolation Safety Seat Leakage Remote Position	A	Remote Position Indication, Exercise/2 Years Containment Isolation Leak Test Exercise Full Stroke/ Cold Shutdown Operability Test	5 7

Table 3.9-14 Valve Inservice Test Requirements (Sheet 69 of 124)

Valve Tag Number	Description	Valve/ Actuator Type	Safety-Related Missions	Safety Functions(2)	ASME IST Category	Inservice Testing Type and Frequency	IST Notes
NCS-MOV-402B	Reactor coolant pump component cooling water supply containment isolation	Remote MO Gate	Maintain Close Transfer Close Transfer Open Maintain Open	Active Containment Isolation Safety Seat Leakage Remote Position	A	Remote Position Indication, Exercise/2 Years Containment Isolation Leak Test Exercise Full Stroke/ Cold Shutdown Operability Test	5 7
NCS-VLV-403A	Reactor coolant pump component cooling water supply containment isolation	Check	Maintain Close Transfer Close Transfer Open Maintain Open	Active Containment Isolation Safety Seat Leakage	AC	Containment Isolation Leak Test Check Exercise / Refueling Outage	3 5
NCS-VLV-403B	Reactor coolant pump component cooling water supply containment isolation	Check	Maintain Close Transfer Close Transfer Open Maintain Open	Active Containment Isolation Safety Seat Leakage	AC	Containment Isolation Leak Test Check Exercise / Refueling Outage	3 5
NCS-MOV-438A	Reactor coolant pump component cooling water return containment isolation	Remote MO Gate	Maintain Close Transfer Close Transfer Open Maintain Open	Active Containment Isolation Safety Seat Leakage Remote Position	A	Remote Position Indication, Exercise/2 Years Containment Isolation Leak Test Exercise Full Stroke/ Cold Shutdown Operability Test	5 7

Table 3.9-14 Valve Inservice Test Requirements (Sheet 70 of 124)

Valve Tag Number	Description	Valve/ Actuator Type	Safety-Related Missions	Safety Functions(2)	ASME IST Category	Inservice Testing Type and Frequency	IST Notes
NCS-MOV-438B	Reactor coolant pump component cooling water return containment isolation	Remote MO Gate	Maintain Close Transfer Close Transfer Open Maintain Open	Active Containment Isolation Safety Seat Leakage Remote Position	A	Remote Position Indication, Exercise/2 Years Containment Isolation Leak Test Exercise Full Stroke/ Cold Shutdown Operability Test	5 7
NCS-MOV-436A	Reactor coolant pump component cooling water return containment isolation	Remote MO Gate	Maintain Close Transfer Close Transfer Open Maintain Open	Active Containment Isolation Safety Seat Leakage Remote Position	A	Remote Position Indication, Exercise/2 Years Containment Isolation Leak Test Exercise Full Stroke/ Cold Shutdown Operability Test	5 7
NCS-MOV-436B	Reactor coolant pump component cooling water return containment isolation	Remote MO Gate	Maintain Close Transfer Close Transfer Open Maintain Open	Active Containment Isolation Safety Seat Leakage Remote Position	A	Remote Position Indication, Exercise/2 Years Containment Isolation Leak Test Exercise Full Stroke/ Cold Shutdown Operability Test	5 7
NCS-MOV-401A	Reactor coolant pump component cooling water supply line isolation	Remote MO Gate	Maintain Close Transfer Close Transfer Open Maintain Open	Active Remote Position	B	Remote Position Indication, Exercise/2 Years Exercise Full Stroke/ Cold Shutdown Operability Test	7

Table 3.9-14 Valve Inservice Test Requirements (Sheet 71 of 124)

Valve Tag Number	Description	Valve/ Actuator Type	Safety-Related Missions	Safety Functions(2)	ASME IST Category	Inservice Testing Type and Frequency	IST Notes
NCS-MOV-401B	Reactor coolant pump component cooling water supply line isolation	Remote MO Gate	Maintain Close Transfer Close Transfer Open Maintain Open	Active Remote Position	B	Remote Position Indication, Exercise/2 Years Exercise Full Stroke/ Cold Shutdown Operability Test	7
NCS-MOV-446A	Reactor coolant pump motor component cooling water inlet side isolation	Remote MO Gate	Maintain Open Transfer Close	Active Remote Position	B	Remote Position Indication, Exercise/2 Years Exercise Full Stroke/ Cold Shutdown Operability Test	7
NCS-MOV-446B	Reactor coolant pump motor component cooling water inlet side isolation	Remote MO Gate	Maintain Open Transfer Close	Active Remote Position	B	Remote Position Indication, Exercise/2 Years Exercise Full Stroke/ Cold Shutdown Operability Test	7
NCS-MOV-446C	Reactor coolant pump motor component cooling water inlet side isolation	Remote MO Gate	Maintain Open Transfer Close	Active Remote Position	B	Remote Position Indication, Exercise/2 Years Exercise Full Stroke/ Cold Shutdown Operability Test	7
NCS-MOV-446D	Reactor coolant pump motor component cooling water inlet side isolation	Remote MO Gate	Maintain Open Transfer Close	Active Remote Position	B	Remote Position Indication, Exercise/2 Years Exercise Full Stroke/ Cold Shutdown Operability Test	7

Table 3.9-14 Valve Inservice Test Requirements (Sheet 72 of 124)

Valve Tag Number	Description	Valve/ Actuator Type	Safety-Related Missions	Safety Functions(2)	ASME IST Category	Inservice Testing Type and Frequency	IST Notes
NCS-SRV-003A	Component cooling water surge tank relief	Relief	Maintain Close Transfer Open Transfer Close	Active	BC	Class 2/3 Relief Valve Tests/10 Years and 20% in 4 Years	
NCS-SRV-003B	Component cooling water surge tank relief	Relief	Maintain Close Transfer Open Transfer Close	Active	BC	Class 2/3 Relief Valve Tests/10 Years and 20% in 4 Years	
NCS-VLV-016A	Component cooling water pump discharge check	Check	Maintain Open Transfer Open Transfer Close	Active	BC	Check Exercise/ Refueling Outage	3
NCS-VLV-016B	Component cooling water pump discharge check	Check	Maintain Open Transfer Open Transfer Close	Active	BC	Check Exercise/ Refueling Outage	3
NCS-VLV-016C	Component cooling water pump discharge check	Check	Maintain Open Transfer Open Transfer Close	Active	BC	Check Exercise/ Refueling Outage	3
NCS-VLV-016D	Component cooling water Pump discharge check	Check	Maintain Open Transfer Open Transfer Close	Active	BC	Check Exercise/ Refueling Outage	3

Table 3.9-14 Valve Inservice Test Requirements (Sheet 73 of 124)

Valve Tag Number	Description	Valve/ Actuator Type	Safety-Related Missions	Safety Functions(2)	ASME IST Category	Inservice Testing Type and Frequency	IST Notes
NCS-AOV-057A	Component cooling water A2 supply header isolation	Remote AO Butterfly	Maintain Close Transfer Close	Active to Failed Remote Position Safety Seat Leakage	A	Remote Position Indication, Exercise/2 Years Non-safety portion Isolation Leak Test Exercise Full Stroke/ Refueling Outage Operability Test	6
NCS-AOV-058A	Component cooling water A2 supply header isolation	Remote AO Butterfly	Maintain Close Transfer Close	Active to Failed Remote Position Safety Seat Leakage	A	Remote Position Indication, Exercise/2 Years Non-safety portion Isolation Leak Test Exercise Full Stroke/ Refueling Outage Operability Test	6
NCS-VLV-036A	Component cooling water A2 return header check	Check	Maintain Close Transfer Close	Active Safety Seat Leakage	AC	Non-safety portion Isolation Leak Test Check Exercise/ Refueling Outage	3
NCS-VLV-037A	Component cooling water A2 return header check	Check	Maintain Close Transfer Close	Active Safety Seat Leakage	AC	Non-safety portion Isolation Leak Test Check Exercise/ Refueling Outage	3

Table 3.9-14 Valve Inservice Test Requirements (Sheet 74 of 124)

Valve Tag Number	Description	Valve/ Actuator Type	Safety-Related Missions	Safety Functions(2)	ASME IST Category	Inservice Testing Type and Frequency	IST Notes
NCS-AOV-057B	Component cooling water C2 supply header isolation	Remote AO Butterfly	Maintain Close Transfer Close	Active to Failed Remote Position Safety Seat Leakage	A	Remote Position Indication, Exercise/2 Years Non-safety portion Isolation Leak Test Exercise Full Stroke/ Refueling Outage Operability Test	6
NCS-AOV-058B	Component cooling water C2 supply header isolation	Remote AO Butterfly	Maintain Close Transfer Close	Active to Failed Remote Position Safety Seat Leakage	A	Remote Position Indication, Exercise/2 Years Non-safety portion Isolation Leak Test Exercise Full Stroke/ Refueling Outage Operability Test	6
NCS-VLV-036B	Component cooling water C2 return header check	Check	Maintain Close Transfer Close	Active Safety Seat Leakage	AC	Non-safety portion Isolation Leak Test Check Exercise/ Refueling Outage	3
NCS-VLV-037B	Component cooling water C2 return header check	Check	Maintain Close Transfer Close	Active Safety Seat Leakage	AC	Non-safety portion Isolation Leak Test Check Exercise/ Refueling Outage	3
NCS-VLV-405A	Reactor coolant pump thermal barrier heat exchanger component cooling water supply check	Check	Maintain Open Transfer Open Transfer Close	Active	BC	Check Exercise/ Refueling Outage	3

Table 3.9-14 Valve Inservice Test Requirements (Sheet 75 of 124)

Valve Tag Number	Description	Valve/ Actuator Type	Safety-Related Missions	Safety Functions(2)	ASME IST Category	Inservice Testing Type and Frequency	IST Notes
NCS-VLV-405B	Reactor coolant pump thermal barrier heat exchanger component cooling water supply check	Check	Maintain Open Transfer Open Transfer Close	Active	BC	Check Exercise/ Refueling Outage	3
NCS-VLV-405C	Reactor coolant pump thermal barrier heat exchanger component cooling water supply check	Check	Maintain Open Transfer Open Transfer Close	Active	BC	Check Exercise/ Refueling Outage	3
NCS-VLV-405D	Reactor coolant pump thermal barrier heat exchanger component cooling water supply check	Check	Maintain Open Transfer Open Transfer Close	Active	BC	Check Exercise/ Refueling Outage	3
NCS-FCV-129A	Reactor coolant pump thermal barrier heat exchanger component cooling water return isolation	Remote MO Globe	Maintain Open Transfer Close	Active Remote Position	B	Remote Position Indication, Exercise/2 Years Exercise Full Stroke/ Cold Shutdown Operability Test	7

Table 3.9-14 Valve Inservice Test Requirements (Sheet 76 of 124)

Valve Tag Number	Description	Valve/ Actuator Type	Safety-Related Missions	Safety Functions(2)	ASME IST Category	Inservice Testing Type and Frequency	IST Notes
NCS-FCV-130A	Reactor coolant pump thermal barrier heat exchanger component cooling water return isolation	Remote MO Globe	Maintain Open Transfer Close	Active Remote Position	B	Remote Position Indication, Exercise/2 Years Exercise Full Stroke/ Cold Shutdown Operability Test	7
NCS-FCV-131A	Reactor coolant pump thermal barrier heat exchanger component cooling water return isolation	Remote MO Globe	Maintain Open Transfer Close	Active Remote Position	B	Remote Position Indication, Exercise/2 Years Exercise Full Stroke/ Cold Shutdown Operability Test	7
NCS-FCV-132A	Reactor coolant pump thermal barrier heat exchanger component cooling water return isolation	Remote MO Globe	Maintain Open Transfer Close	Active Remote Position	B	Remote Position Indication, Exercise/2 Years Exercise Full Stroke/ Cold Shutdown Operability Test	7
NCS-FCV-129B	Reactor coolant pump thermal barrier heat exchanger component cooling water return isolation	Remote MO Globe	Maintain Open Transfer Close	Active Remote Position	B	Remote Position Indication, Exercise/2 Years Exercise Full Stroke/ Cold Shutdown Operability Test	7

Table 3.9-14 Valve Inservice Test Requirements (Sheet 77 of 124)

Valve Tag Number	Description	Valve/ Actuator Type	Safety-Related Missions	Safety Functions(2)	ASME IST Category	Inservice Testing Type and Frequency	IST Notes
NCS-FCV-130B	Reactor coolant pump thermal barrier heat exchanger component cooling water return isolation	Remote MO Globe	Maintain Open Transfer Close	Active Remote Position	B	Remote Position Indication, Exercise/2 Years Exercise Full Stroke/ Cold Shutdown Operability Test	7
NCS-FCV-131B	Reactor coolant pump thermal barrier heat exchanger component cooling water return isolation	Remote MO Globe	Maintain Open Transfer Close	Active Remote Position	B	Remote Position Indication, Exercise/2 Years Exercise Full Stroke/ Cold Shutdown Operability Test	7
NCS-FCV-132B	Reactor coolant pump thermal barrier heat exchanger component cooling water return isolation	Remote MO Globe	Maintain Open Transfer Close	Active Remote Position	B	Remote Position Indication, Exercise/2 Years Exercise Full Stroke/ Cold Shutdown Operability Test	7
NCS-SRV-435A	Reactor coolant pump component cooling water return line relief	Relief	Maintain Close Transfer Open Transfer Close	Active	BC	Class 2/3 Relief Valve Tests/10 Years and 20% in 4 Years	
NCS-SRV-435B	Reactor coolant pump component cooling water return line relief	Relief	Maintain Close Transfer Open Transfer Close	Active	BC	Class 2/3 Relief Valve Tests/10 Years and 20% in 4 Years	
NCS-VLV-439A	Reactor coolant pump component cooling water return line check	Check	Maintain Open Transfer Open Transfer Close	Active	BC	Check Exercise/ Refueling Outage	3

Table 3.9-14 Valve Inservice Test Requirements (Sheet 78 of 124)

Valve Tag Number	Description	Valve/ Actuator Type	Safety-Related Missions	Safety Functions(2)	ASME IST Category	Inservice Testing Type and Frequency	IST Notes
NCS-VLV-439B	Reactor coolant pump component cooling water return line check	Check	Maintain Open Transfer Open Transfer Close	Active	BC	Check Exercise/ Refueling Outage	3
NCS-VLV-437A	Reactor coolant pump component cooling water return containment isolation check	Check	Maintain Close Transfer Close	Active Containment Isolation Safety Seat Leakage	AC	Containment Isolation Leak Test	5
NCS-VLV-437B	Reactor coolant pump component cooling water return containment isolation check	Check	Maintain Close Transfer Close	Active Containment Isolation Safety Seat Leakage	AC	Containment Isolation Leak Test	5
NCS-MOV-321A	Charging pump fire water supply line isolation	Remote MO Gate	Maintain Close	Safety Seat Leakage	A	Remote Position Indication, Exercise/2 Years Non-safety portion Isolation Leak Test Exercise Full Stroke/ Refueling Outage Operability Test	
NCS-MOV-321B	Charging pump fire water supply line isolation	Remote MO Gate	Maintain Close	Safety Seat Leakage	A	Remote Position Indication, Exercise/2 Years Non-safety portion Isolation Leak Test Exercise Full Stroke/ Refueling Outage Operability Test	

Table 3.9-14 Valve Inservice Test Requirements (Sheet 79 of 124)

Valve Tag Number	Description	Valve/ Actuator Type	Safety-Related Missions	Safety Functions(2)	ASME IST Category	Inservice Testing Type and Frequency	IST Notes
NCS-MOV-322A	Charging pump alternative water supply line isolation	Remote MO Gate	Maintain Close	Safety Seat Leakage	A	Remote Position Indication, Exercise/2 Years Non-safety portion Isolation Leak Test Exercise Full Stroke/ Refueling Outage Operability Test	
NCS-MOV-322B	Charging pump alternative water supply line isolation	Remote MO Gate	Maintain Close	Safety Seat Leakage	A	Remote Position Indication, Exercise/2 Years Non-safety portion Isolation Leak Test Exercise Full Stroke/ Refueling Outage Operability Test	
NCS-MOV-323A	Charging pump non-essential chilled water supply line isolation	Remote MO Gate	Maintain Close	Safety Seat Leakage	A	Remote Position Indication, Exercise/2 Years Non-safety portion Isolation Leak Test Exercise Full Stroke/ Refueling Outage Operability Test	
NCS-MOV-323B	Charging pump non-essential chilled water supply line isolation	Remote MO Gate	Maintain Close	Safety Seat Leakage	A	Remote Position Indication, Exercise/2 Years Non-safety portion Isolation Leak Test Exercise Full Stroke/ Refueling Outage Operability Test	

Table 3.9-14 Valve Inservice Test Requirements (Sheet 80 of 124)

Valve Tag Number	Description	Valve/ Actuator Type	Safety-Related Missions	Safety Functions(2)	ASME IST Category	Inservice Testing Type and Frequency	IST Notes
NCS-MOV-324A	Charging pump alternative water return line isolation	Remote MO Gate	Maintain Close	Safety Seat Leakage	A	Remote Position Indication, Exercise/2 Years Non-safety portion Isolation Leak Test Exercise Full Stroke/ Refueling Outage Operability Test	
NCS-MOV-324B	Charging pump alternative water return line isolation	Remote MO Gate	Maintain Close	Safety Seat Leakage	A	Remote Position Indication, Exercise/2 Years Non-safety portion Isolation Leak Test Exercise Full Stroke/ Refueling Outage Operability Test	
NCS-MOV-325A	Charging pump fire water return line isolation	Remote MO Gate	Maintain Close	Safety Seat Leakage	A	Remote Position Indication, Exercise/2 Years Non-safety portion Isolation Leak Test Exercise Full Stroke/ Refueling Outage Operability Test	
NCS-MOV-325B	Charging pump fire water return line isolation	Remote MO Gate	Maintain Close	Safety Seat Leakage	A	Remote Position Indication, Exercise/2 Years Non-safety portion Isolation Leak Test Exercise Full Stroke/ Refueling Outage Operability Test	

Table 3.9-14 Valve Inservice Test Requirements (Sheet 81 of 124)

Valve Tag Number	Description	Valve/ Actuator Type	Safety-Related Missions	Safety Functions(2)	ASME IST Category	Inservice Testing Type and Frequency	IST Notes
NCS-MOV-326A	Charging pump non-essential chilled water return line isolation	Remote MO Gate	Maintain Close	Safety Seat Leakage	A	Remote Position Indication, Exercise/2 Years Non-safety portion Isolation Leak Test Exercise Full Stroke/ Refueling Outage Operability Test	
NCS-MOV-326B	Charging pump non-essential chilled water return line isolation	Remote MO Gate	Maintain Close	Safety Seat Leakage	A	Remote Position Indication, Exercise/2 Years Non-safety portion Isolation Leak Test Exercise Full Stroke/ Refueling Outage Operability Test	
NCS-MOV-241	Containment fan cooler alternative cooling water supply isolation	Remote MO Gate	Maintain Close	Safety Seat Leakage	A	Remote Position Indication, Exercise/2 Years Non-safety portion Isolation Leak Test Exercise Full Stroke/ Refueling Outage Operability Test	
NCS-MOV-242	Containment fan cooler alternative cooling water supply isolation	Remote MO Gate	Maintain Close	Safety Seat Leakage	A	Remote Position Indication, Exercise/2 Years Non-safety portion Isolation Leak Test Exercise Full Stroke/ Refueling Outage Operability Test	

Table 3.9-14 Valve Inservice Test Requirements (Sheet 82 of 124)

Valve Tag Number	Description	Valve/ Actuator Type	Safety-Related Missions	Safety Functions(2)	ASME IST Category	Inservice Testing Type and Frequency	IST Notes
SFS-MOV-001A,B	Cooling-purification lines isolation	Remote MO Gate	Transfer Close, Maintain Close	Active	BC	Remote Position Indication. Exercise/2 Years; Exercise Full Stroke/Quarterly Operability Test	
SFS-MOV-002A,B	Cooling-purification lines isolation	Remote MO Globe	Transfer Close, Maintain Close	Active	BC	Remote Position Indication. Exercise/2 Years; Exercise Full Stroke/Quarterly Operability Test	
SFS-MOV-028	SFP makeup line from RWSP isolation	Remote MO Gate	Transfer Open	Active Remote Position	B	Remote Position Indication, Exercise/ 2 Years Exercise Full Stroke/ Quarterly Operability Test	
SFS-MOV-029	SFP makeup line from RWSP isolation	Remote MO Gate	Transfer Open	Active Remote Position	B	Remote Position Indication, Exercise/ 2 Years Exercise Full Stroke/ Quarterly Operability Test	
SFS-VLV-006A	Spent fuel pit pump discharge check	Check	Maintain Open Transfer Open Transfer Close	Active	BC	Check Exercise/ Refueling Outage	3
SFS-VLV-006B	Spent fuel pit pump discharge check	Check	Maintain Open Transfer Open Transfer Close	Active	BC	Check Exercise/ Refueling Outage	3
EWS-VLV-502A	Essential service water pump discharge check	Check	Maintain Open Transfer Open Maintain Close Transfer Close	Active	BC	Check Exercise/ Refueling Outage	3

Table 3.9-14 Valve Inservice Test Requirements (Sheet 83 of 124)

Valve Tag Number	Description	Valve/ Actuator Type	Safety-Related Missions	Safety Functions(2)	ASME IST Category	Inservice Testing Type and Frequency	IST Notes
EWS-VLV-502B	Essential service water pump discharge check	Check	Maintain Open Transfer Open Maintain Close Transfer Close	Active	BC	Check Exercise/ Refueling Outage	3
EWS-VLV-502C	Essential service water pump discharge check	Check	Maintain Open Transfer Open Maintain Close Transfer Close	Active	BC	Check Exercise/ Refueling Outage	3
EWS-VLV-502D	Essential service water pump discharge check	Check	Maintain Open Transfer Open Maintain Close Transfer Close	Active	BC	Check Exercise/ Refueling Outage	3
EWS-MOV-503A	Essential service water pump discharge	Remote MO Butterfly	Maintain Close Maintain Open Transfer Open Transfer Close	Active Remote Position	B	Remote Position Indication, Exercise/2 Years Exercise Full Stroke/ Quarterly Operability Test	6
EWS-MOV-503B	Essential service water pump discharge	Remote MO Butterfly	Maintain Close Maintain Open Transfer Open Transfer Close	Active Remote Position	B	Remote Position Indication, Exercise/2 Years Exercise Full Stroke/ Quarterly Operability Test	6
EWS-MOV-503C	Essential service water pump discharge	Remote MO Butterfly	Maintain Close Maintain Open Transfer Open Transfer Close	Active Remote Position	B	Remote Position Indication, Exercise/2 Years Exercise Full Stroke/ Quarterly Operability Test	6

Table 3.9-14 Valve Inservice Test Requirements (Sheet 84 of 124)

Valve Tag Number	Description	Valve/ Actuator Type	Safety-Related Missions	Safety Functions(2)	ASME IST Category	Inservice Testing Type and Frequency	IST Notes
EWS-MOV-503D	Essential service water pump discharge	Remote MO Butterfly	Maintain Close Maintain Open Transfer Open Transfer Close	Active Remote Position	B	Remote Position Indication, Exercise/2 Years Exercise Full Stroke/ Quarterly Operability Test	6
EWS-MOV-573A	Essential service water pump discharge strainer backwash isolation valve	Remote MO Butterfly	Maintain Close Maintain Open Transfer Open Transfer Close	Active Remote Position	B	Remote Position Indication, Exercise/2 Years Exercise Full Stroke/ Cold Shutdown Operability Test	6
EWS-MOV-573B	Essential service water pump discharge strainer backwash isolation valve	Remote MO Butterfly	Maintain Close Maintain Open Transfer Open Transfer Close	Active Remote Position	B	Remote Position Indication, Exercise/2 Years Exercise Full Stroke/ Cold Shutdown Operability Test	6
EWS-MOV-573C	Essential service water pump discharge strainer backwash isolation valve	Remote MO Butterfly	Maintain Close Maintain Open Transfer Open Transfer Close	Active Remote Position	B	Remote Position Indication, Exercise/2 Years Exercise Full Stroke/ Cold Shutdown Operability Test	6
EWS-MOV-573D	Essential service water pump discharge strainer backwash isolation valve	Remote MO Butterfly	Maintain Close Maintain Open Transfer Open Transfer Close	Active Remote Position	B	Remote Position Indication, Exercise/2 Years Exercise Full Stroke/ Cold Shutdown Operability Test	6

Table 3.9-14 Valve Inservice Test Requirements (Sheet 85 of 124)

Valve Tag Number	Description	Valve/ Actuator Type	Safety-Related Missions	Safety Functions(2)	ASME IST Category	Inservice Testing Type and Frequency	IST Notes
EWS-MOV-574A	Essential service water pump discharge strainer backwash isolation valve	Remote MO Butterfly	Maintain Close Maintain Open Transfer Open Transfer Close	Active Remote Position	B	Remote Position Indication, Exercise/2 Years Exercise Full Stroke/ Cold Shutdown Operability Test	6
EWS-MOV-574B	Essential service water pump discharge strainer backwash isolation valve	Remote MO Butterfly	Maintain Close Maintain Open Transfer Open Transfer Close	Active Remote Position	B	Remote Position Indication, Exercise/2 Years Exercise Full Stroke/ Cold Shutdown Operability Test	6
EWS-MOV-574C	Essential service water pump discharge strainer backwash isolation valve	Remote MO Butterfly	Maintain Close Maintain Open Transfer Open Transfer Close	Active Remote Position	B	Remote Position Indication, Exercise/2 Years Exercise Full Stroke/ Cold Shutdown Operability Test	6
EWS-MOV-574D	Essential service water pump discharge strainer backwash isolation valve	Remote MO Butterfly	Maintain Close Maintain Open Transfer Open Transfer Close	Active Remote Position	B	Remote Position Indication, Exercise/2 Years Exercise Full Stroke/ Cold Shutdown Operability Test	6
EWS-MOV-701A	Essential chiller unit ESW supply line isolation valve	Remote MO Butterfly	Maintain Open Transfer Open Transfer Close	Active Remote Position	B	Remote Position Indication, Exercise/2 Years Exercise Full Stroke/ Cold Shutdown Operability Test	6

Table 3.9-14 Valve Inservice Test Requirements (Sheet 86 of 124)

Valve Tag Number	Description	Valve/ Actuator Type	Safety-Related Missions	Safety Functions(2)	ASME IST Category	Inservice Testing Type and Frequency	IST Notes
EWS-MOV-701B	Essential chiller unit ESW supply line isolation valve	Remote MO Butterfly	Maintain Open Transfer Open Transfer Close	Active Remote Position	B	Remote Position Indication, Exercise/2 Years Exercise Full Stroke/ Cold Shutdown Operability Test	6
EWS-MOV-701C	Essential chiller unit ESW supply line isolation valve	Remote MO Butterfly	Maintain Open Transfer Open Transfer Close	Active Remote Position	B	Remote Position Indication, Exercise/2 Years Exercise Full Stroke/ Cold Shutdown Operability Test	6
EWS-MOV-701D	Essential chiller unit ESW supply line isolation valve	Remote MO Butterfly	Maintain Open Transfer Open Transfer Close	Active Remote Position	B	Remote Position Indication, Exercise/2 Years Exercise Full Stroke/ Cold Shutdown Operability Test	6
EWS-MOV-706A	Essential chiller unit ESW supply line isolation valve	Remote MO Butterfly	Transfer Close	Active Remote Position	B	Remote Position Indication, Exercise/2 Years Exercise Full Stroke/ Cold Shutdown Operability Test	6
EWS-MOV-706B	Essential chiller unit ESW supply line isolation valve	Remote MO Butterfly	Transfer Close	Active Remote Position	B	Remote Position Indication, Exercise/2 Years Exercise Full Stroke/ Cold Shutdown Operability Test	6

Table 3.9-14 Valve Inservice Test Requirements (Sheet 87 of 124)

Valve Tag Number	Description	Valve/ Actuator Type	Safety-Related Missions	Safety Functions(2)	ASME IST Category	Inservice Testing Type and Frequency	IST Notes
EWS-MOV-706C	Essential chiller unit ESW supply line isolation valve	Remote MO Butterfly	Transfer Close	Active Remote Position	B	Remote Position Indication, Exercise/2 Years Exercise Full Stroke/ Cold Shutdown Operability Test	6
EWS-MOV-706D	Essential chiller unit ESW supply line isolation valve	Remote MO Butterfly	Transfer Close	Active Remote Position	B	Remote Position Indication, Exercise/2 Years Exercise Full Stroke/ Cold Shutdown Operability Test	6
EWS-MOV-707A	Essential chiller unit ESW supply line isolation valve	Remote MO Butterfly	Transfer Close	Active Remote Position	B	Remote Position Indication, Exercise/2 Years Exercise Full Stroke/ Cold Shutdown Operability Test	6
EWS-MOV-707B	Essential chiller unit ESW supply line isolation valve	Remote MO Butterfly	Transfer Close	Active Remote Position	B	Remote Position Indication, Exercise/2 Years Exercise Full Stroke/ Cold Shutdown Operability Test	6
EWS-MOV-707C	Essential chiller unit ESW supply line isolation valve	Remote MO Butterfly	Transfer Close	Active Remote Position	B	Remote Position Indication, Exercise/2 Years Exercise Full Stroke/ Cold Shutdown Operability Test	6

Table 3.9-14 Valve Inservice Test Requirements (Sheet 88 of 124)

Valve Tag Number	Description	Valve/ Actuator Type	Safety-Related Missions	Safety Functions(2)	ASME IST Category	Inservice Testing Type and Frequency	IST Notes
EWS-MOV-707D	Essential chiller unit ESW supply line isolation valve	Remote MO Butterfly	Transfer Close	Active Remote Position	B	Remote Position Indication, Exercise/2 Years Exercise Full Stroke/ Cold Shutdown Operability Test	6
EWS-MOV-708A	Essential chiller unit ESW return line isolation valve	Remote MO Butterfly	Transfer Close	Active Remote Position	B	Remote Position Indication, Exercise/2 Years Exercise Full Stroke/ Cold Shutdown Operability Test	6
EWS-MOV-708B	Essential chiller unit ESW return line isolation valve	Remote MO Butterfly	Transfer Close	Active Remote Position	B	Remote Position Indication, Exercise/2 Years Exercise Full Stroke/ Cold Shutdown Operability Test	6
EWS-MOV-708C	Essential chiller unit ESW return line isolation valve	Remote MO Butterfly	Transfer Close	Active Remote Position	B	Remote Position Indication, Exercise/2 Years Exercise Full Stroke/ Cold Shutdown Operability Test	6
EWS-MOV-708D	Essential chiller unit ESW return line isolation valve	Remote MO Butterfly	Transfer Close	Active Remote Position	B	Remote Position Indication, Exercise/2 Years Exercise Full Stroke/ Cold Shutdown Operability Test	6

Table 3.9-14 Valve Inservice Test Requirements (Sheet 89 of 124)

Valve Tag Number	Description	Valve/ Actuator Type	Safety-Related Missions	Safety Functions(2)	ASME IST Category	Inservice Testing Type and Frequency	IST Notes
EWS-MOV-709A	Essential chiller unit ESW return line isolation valve	Remote MO Butterfly	Transfer Close	Active Remote Position	B	Remote Position Indication, Exercise/2 Years Exercise Full Stroke/ Cold Shutdown Operability Test	6
EWS-MOV-709B	Essential chiller unit ESW return line isolation valve	Remote MO Butterfly	Transfer Close	Active Remote Position	B	Remote Position Indication, Exercise/2 Years Exercise Full Stroke/ Cold Shutdown Operability Test	6
EWS-MOV-709C	Essential chiller unit ESW return line isolation valve	Remote MO Butterfly	Transfer Close	Active Remote Position	B	Remote Position Indication, Exercise/2 Years Exercise Full Stroke/ Cold Shutdown Operability Test	6
EWS-MOV-709D	Essential chiller unit ESW return line isolation valve	Remote MO Butterfly	Transfer Close	Active Remote Position	B	Remote Position Indication, Exercise/2 Years Exercise Full Stroke/ Cold Shutdown Operability Test	6
EWS-MOV-710A	Essential chiller unit ESW return line isolation valve	Remote MO Butterfly	Maintain Open Transfer Open Transfer Close	Active Remote Position	B	Remote Position Indication, Exercise/2 Years Exercise Full Stroke/ Cold Shutdown Operability Test	6

Table 3.9-14 Valve Inservice Test Requirements (Sheet 90 of 124)

Valve Tag Number	Description	Valve/ Actuator Type	Safety-Related Missions	Safety Functions(2)	ASME IST Category	Inservice Testing Type and Frequency	IST Notes
EWS-MOV-710B	Essential chiller unit ESW return line isolation valve	Remote MO Butterfly	Maintain Open Transfer Open Transfer Close	Active Remote Position	B	Remote Position Indication, Exercise/2 Years Exercise Full Stroke/ Cold Shutdown Operability Test	6
EWS-MOV-710C	Essential chiller unit ESW return line isolation valve	Remote MO Butterfly	Maintain Open Transfer Open Transfer Close	Active Remote Position	B	Remote Position Indication, Exercise/2 Years Exercise Full Stroke/ Cold Shutdown Operability Test	6
EWS-MOV-710D	Essential chiller unit ESW return line isolation valve	Remote MO Butterfly	Maintain Open Transfer Open Transfer Close	Active Remote Position	B	Remote Position Indication, Exercise/2 Years Exercise Full Stroke/ Cold Shutdown Operability Test	6
LMS-AOV-060	C/V reactor coolant drain tank nitrogen supply containment isolation	Remote AO weir type diaphragm	Maintain Close Transfer Close	Active-to-Fail Containment Isolation Safety Seat Leakage Remote Position	A	Remote Position Indication, Exercise/2 Years Containment Isolation Leak Test Exercise Full Stroke/ Quarterly Operability Test	5

Table 3.9-14 Valve Inservice Test Requirements (Sheet 91 of 124)

Valve Tag Number	Description	Valve/ Actuator Type	Safety-Related Missions	Safety Functions(2)	ASME IST Category	Inservice Testing Type and Frequency	IST Notes
LMS-AOV-056	C/V reactor coolant drain tank vent header containment isolation	Remote AO weir type diaphragm	Maintain Close Transfer Close	Active-to-Fail Containment Isolation Safety Seat Leakage Remote Position	A	Remote Position Indication, Exercise/2 Years Containment Isolation Leak Test Exercise Full Stroke/ Quarterly Operability Test	5
LMS-AOV-055	C/V reactor coolant drain tank vent header containment isolation	Remote AO weir type diaphragm	Maintain Close Transfer Close	Active-to-Fail Containment Isolation Safety Seat Leakage Remote Position	A	Remote Position Indication, Exercise/2 Years Containment Isolation Leak Test Exercise Full Stroke/ Quarterly Operability Test	5
LMS-AOV-053	C/V reactor coolant drain tank gas analyzer line containment isolation	Remote AO weir type diaphragm	Maintain Close Transfer Close	Active-to-Fail Containment Isolation Safety Seat Leakage Remote Position	A	Remote Position Indication, Exercise/2 Years Containment Isolation Leak Test Exercise Full Stroke/ Quarterly Operability Test	5
LMS-AOV-052	C/V reactor coolant drain tank gas analyzer line containment isolation	Remote AO weir type diaphragm	Maintain Close Transfer Close	Active-to-Fail Containment Isolation Safety Seat Leakage Remote Position	A	Remote Position Indication, Exercise/2 Years Containment Isolation Leak Test Exercise Full Stroke/ Quarterly Operability Test	5

Table 3.9-14 Valve Inservice Test Requirements (Sheet 92 of 124)

Valve Tag Number	Description	Valve/ Actuator Type	Safety-Related Missions	Safety Functions(2)	ASME IST Category	Inservice Testing Type and Frequency	IST Notes
LMS-LCV-010B	C/V reactor coolant drain tank discharge line containment isolation	Remote AO weir type diaphragm	Maintain Close Transfer Close	Active-to-Fail Containment Isolation Safety Seat Leakage Remote Position	A	Remote Position Indication, Exercise/2 Years Containment Isolation Leak Test Exercise Full Stroke/ Quarterly Operability Test	5
LMS-LCV-010A	C/V reactor coolant drain tank discharge line containment isolation	Remote AO weir type diaphragm	Maintain Close Transfer Close	Active-to-Fail Containment Isolation Safety Seat Leakage Remote Position	A	Remote Position Indication, Exercise/2 Years Containment Isolation Leak Test Exercise Full Stroke/ Quarterly Operability Test	5
LMS-AOV-105	C/V sump discharge line containment isolation	Remote AO weir type diaphragm	Maintain Close Transfer Close	Active-to-Fail Containment Isolation Safety Seat Leakage Remote Position	A	Remote Position Indication, Exercise/2 Years Containment Isolation Leak Test Exercise Full Stroke/ Quarterly Operability Test	5

Table 3.9-14 Valve Inservice Test Requirements (Sheet 93 of 124)

Valve Tag Number	Description	Valve/ Actuator Type	Safety-Related Missions	Safety Functions(2)	ASME IST Category	Inservice Testing Type and Frequency	IST Notes
LMS-AOV-104	C/V sump discharge line containment isolation	Remote AO weir type diaphragm	Maintain Close Transfer Close	Active-to-Fail Containment Isolation Safety Seat Leakage Remote Position	A	Remote Position Indication, Exercise/2 Years Containment Isolation Leak Test Exercise Full Stroke/ Quarterly Operability Test	5
PSS-AOV-003	Pressurizer gas phase sampling line containment isolation	Remote AO Globe	Maintain Close Transfer Close	Active-to-Fail Containment Isolation Safety Seat Leakage Remote Position	A	Remote Position Indication, Exercise/2 Years Containment Isolation Leak Test Exercise Full Stroke/ Quarterly Operability Test	5
PSS-MOV-006	Pressurizer liquid phase sampling line containment isolation	Remote MO Globe	Maintain Close Transfer Close	Active Containment Isolation Safety Seat Leakage Remote Position	A	Remote Position Indication, Exercise/2 Years Containment Isolation Leak Test Exercise Full Stroke/ Quarterly Operability Test	5

Table 3.9-14 Valve Inservice Test Requirements (Sheet 94 of 124)

Valve Tag Number	Description	Valve/ Actuator Type	Safety-Related Missions	Safety Functions(2)	ASME IST Category	Inservice Testing Type and Frequency	IST Notes
PSS-MOV-013	C-loop hot leg sampling line containment isolation	Remote MO Globe	Maintain Close Transfer Close	Active Containment Isolation Safety Seat Leakage Remote Position	A	Remote Position Indication, Exercise/2 Years Containment Isolation Leak Test Exercise Full Stroke/ Quarterly Operability Test	5
PSS-MOV-023	B-loop hot leg sampling line containment isolation	Remote MO Globe	Maintain Close Transfer Close	Active Containment Isolation Safety Seat Leakage Remote Position	A	Remote Position Indication, Exercise/2 Years Containment Isolation Leak Test Exercise Full Stroke/ Quarterly Operability Test	5
PSS-MOV-031A	Pressurizer and loop sampling line containment isolation	Remote MO Globe	Maintain Close Transfer Close	Active Containment Isolation Safety Seat Leakage Remote Position	A	Remote Position Indication, Exercise/2 Years Containment Isolation Leak Test Exercise Full Stroke/ Quarterly Operability Test	5

Table 3.9-14 Valve Inservice Test Requirements (Sheet 95 of 124)

Valve Tag Number	Description	Valve/ Actuator Type	Safety-Related Missions	Safety Functions(2)	ASME IST Category	Inservice Testing Type and Frequency	IST Notes
PSS-MOV-031B	Loop sampling line containment isolation	Remote MO Globe	Maintain Close Transfer Close	Active Containment Isolation Safety Seat Leakage Remote Position	A	Remote Position Indication, Exercise/2 Years Containment Isolation Leak Test Exercise Full Stroke/ Quarterly Operability Test	5
PSS-MOV-052A	Containment spray/residual heat removal heat exchanger downstream sampling line isolation	Remote MO Globe	Maintain Close Transfer Close	Active Remote Position	B	Remote Position Indication, Exercise/2 Years Exercise Full Stroke/ Quarterly Operability Test	
PSS-MOV-052B	Containment spray/residual heat removal heat exchanger downstream sampling line isolation	Remote MO Globe	Maintain Close Transfer Close	Active Remote Position	B	Remote Position Indication, Exercise/2 Years Exercise Full Stroke/ Quarterly Operability Test	
PSS-MOV-052C	Containment spray/residual heat removal heat exchanger downstream sampling line isolation	Remote MO Globe	Maintain Close Transfer Close	Active Remote Position	B	Remote Position Indication, Exercise/2 Years Exercise Full Stroke/ Quarterly Operability Test	

Table 3.9-14 Valve Inservice Test Requirements (Sheet 96 of 124)

Valve Tag Number	Description	Valve/ Actuator Type	Safety-Related Missions	Safety Functions(2)	ASME IST Category	Inservice Testing Type and Frequency	IST Notes
PSS-MOV-052D	Containment spray/residual heat removal heat exchanger downstream sampling line isolation	Remote MO Globe	Maintain Close Transfer Close	Active Remote Position	B	Remote Position Indication, Exercise/2 Years Exercise Full Stroke/ Quarterly Operability Test	
PSS-AOV-062A	Accumulator sampling line containment isolation	Remote AO Globe	Maintain Close Transfer Close	Active-to-Fail Containment Isolation Safety Seat Leakage Remote Position	A	Remote Position Indication, Exercise/2 Years Containment Isolation Leak Test Exercise Full Stroke/ Quarterly Operability Test	5
PSS-AOV-062B	Accumulator sampling line containment isolation	Remote AO Globe	Maintain Close Transfer Close	Active-to-Fail Containment Isolation Safety Seat Leakage Remote Position	A	Remote Position Indication, Exercise/2 Years Containment Isolation Leak Test Exercise Full Stroke/ Quarterly Operability Test	5

Table 3.9-14 Valve Inservice Test Requirements (Sheet 97 of 124)

Valve Tag Number	Description	Valve/ Actuator Type	Safety-Related Missions	Safety Functions(2)	ASME IST Category	Inservice Testing Type and Frequency	IST Notes
PSS-AOV-062C	Accumulator sampling line containment isolation	Remote AO Globe	Maintain Close Transfer Close	Active-to-Fail Containment Isolation Safety Seat Leakage Remote Position	A	Remote Position Indication, Exercise/2 Years Containment Isolation Leak Test Exercise Full Stroke/ Quarterly Operability Test	5
PSS-AOV-062D	Accumulator sampling line containment isolation	Remote AO Globe	Maintain Close Transfer Close	Active-to-Fail Containment Isolation Safety Seat Leakage Remote Position	A	Remote Position Indication, Exercise/2 Years Containment Isolation Leak Test Exercise Full Stroke/ Quarterly Operability Test	5
PSS-AOV-063	Accumulator sampling line containment isolation	Remote AO Globe	Maintain Close Transfer Close	Active-to-Fail Containment Isolation Safety Seat Leakage Remote Position	A	Remote Position Indication, Exercise/2 Years Containment Isolation Leak Test Exercise Full Stroke/ Quarterly Operability Test	5

Table 3.9-14 Valve Inservice Test Requirements (Sheet 98 of 124)

Valve Tag Number	Description	Valve/ Actuator Type	Safety-Related Missions	Safety Functions(2)	ASME IST Category	Inservice Testing Type and Frequency	IST Notes
PSS-MOV-071	Post accident sampling return line containment isolation	Remote MO Globe	Maintain Close Transfer Close	Active Containment Isolation Safety Seat Leakage Remote Position	A	Remote Position Indication, Exercise/2 Years Containment Isolation Leak Test Exercise Full Stroke/ Quarterly Operability Test	5
PSS-VLV-072	Post accident sampling return line containment isolation	Check	Maintain Close Transfer Close	Active Containment Isolation Safety Seat Leakage	AC	Containment Isolation Leak Test Check Exercise/ Refueling Outage	3 5
SGS-AOV-001A	Steam generator blow down isolation	Remote AO Globe	Maintain Close Transfer Close	Active-to-Fail Containment Isolation Safety Seat Leakage Remote Position	A	Remote Position Indication, Exercise/2 Years Containment Isolation Leak Test Exercise Full Stroke/ Cold Shutdown Operability Test	5 6
SGS-AOV-001B	Steam generator blow down isolation	Remote AO Globe	Maintain Close Transfer Close	Active-to-Fail Containment Isolation Safety Seat Leakage Remote Position	A	Remote Position Indication, Exercise/2 Years Containment Isolation Leak Test Exercise Full Stroke/ Cold Shutdown Operability Test	5 6

Table 3.9-14 Valve Inservice Test Requirements (Sheet 99 of 124)

Valve Tag Number	Description	Valve/ Actuator Type	Safety-Related Missions	Safety Functions(2)	ASME IST Category	Inservice Testing Type and Frequency	IST Notes
SGS-AOV-001C	Steam generator blow down isolation	Remote AO Globe	Maintain Close Transfer Close	Active-to-Fail Containment Isolation Safety Seat Leakage Remote Position	A	Remote Position Indication, Exercise/2 Years Containment Isolation Leak Test Exercise Full Stroke/ Cold Shutdown Operability Test	5 6
SGS-AOV-001D	Steam generator blow down isolation	Remote AO Globe	Maintain Close Transfer Close	Active-to-Fail Containment Isolation Safety Seat Leakage Remote Position	A	Remote Position Indication, Exercise/2 Years Containment Isolation Leak Test Exercise Full Stroke/ Cold Shutdown Operability Test	5 6
SGS-AOV-002A	Steam generator blow down isolation	Remote AO Globe	Maintain Close Transfer Close	Active-to-Fail Remote Position	B	Remote Position Indication, Exercise/2 Years Exercise Full Stroke/ Cold Shutdown Operability Test	6
SGS-AOV-002B	Steam generator blow down isolation	Remote AO Globe	Maintain Close Transfer Close	Active-to-Fail Remote Position	B	Remote Position Indication, Exercise/2 Years Exercise Full Stroke/ Cold Shutdown Operability Test	6

Table 3.9-14 Valve Inservice Test Requirements (Sheet 100 of 124)

Valve Tag Number	Description	Valve/ Actuator Type	Safety-Related Missions	Safety Functions(2)	ASME IST Category	Inservice Testing Type and Frequency	IST Notes
SGS-AOV-002C	Steam generator blow down isolation	Remote AO Globe	Maintain Close Transfer Close	Active-to-Fail Remote Position	B	Remote Position Indication, Exercise/2 Years Exercise Full Stroke/ Cold Shutdown Operability Test	6
SGS-AOV-002D	Steam generator blow down isolation	Remote AO Globe	Maintain Close Transfer Close	Active-to-Fail Remote Position	B	Remote Position Indication, Exercise/2 Years Exercise Full Stroke/ Cold Shutdown Operability Test	6
SGS-AOV-031A	Steam generator blow down sampling line isolation	Remote AO Globe	Maintain Close Transfer Close	Active-to-Fail Containment Isolation Safety Seat Leakage Remote Position	A	Remote Position Indication, Exercise/2 Years Containment Isolation Leak Test Exercise Full Stroke/ Quarterly Operability Test	5
SGS-AOV-031B	Steam generator blow down sampling line isolation	Remote AO Globe	Maintain Close Transfer Close	Active-to-Fail Containment Isolation Safety Seat Leakage Remote Position	A	Remote Position Indication, Exercise/2 Years Containment Isolation Leak Test Exercise Full Stroke/ Quarterly Operability Test	5

Table 3.9-14 Valve Inservice Test Requirements (Sheet 101 of 124)

Valve Tag Number	Description	Valve/ Actuator Type	Safety-Related Missions	Safety Functions(2)	ASME IST Category	Inservice Testing Type and Frequency	IST Notes
SGS-AOV-031C	Steam generator blow down sampling line isolation	Remote AO Globe	Maintain Close Transfer Close	Active-to-Fail Containment Isolation Safety Seat Leakage Remote Position	A	Remote Position Indication, Exercise/2 Years Containment Isolation Leak Test Exercise Full Stroke/ Quarterly Operability Test	5
SGS-AOV-031D	Steam generator blow down sampling line isolation	Remote AO Globe	Maintain Close Transfer Close	Active-to-Fail Containment Isolation Safety Seat Leakage Remote Position	A	Remote Position Indication, Exercise/2 Years Containment Isolation Leak Test Exercise Full Stroke/ Quarterly Operability Test	5
RWS-MOV-004	Refueling water storage pit purification line containment isolation	Remote MO Gate	Maintain Close Transfer Close	Active Containment Isolation Safety Seat Leakage Remote Position	A	Remote Position Indication, Exercise/2 Years Containment Isolation Leak Test Exercise Full Stroke/ Quarterly Operability Test	5

Table 3.9-14 Valve Inservice Test Requirements (Sheet 102 of 124)

Valve Tag Number	Description	Valve/ Actuator Type	Safety-Related Missions	Safety Functions(2)	ASME IST Category	Inservice Testing Type and Frequency	IST Notes
RWS-MOV-002	Refueling water storage pit purification line containment isolation	Remote MO Gate	Maintain Close Transfer Close	Active Containment Isolation Safety Seat Leakage Remote Position	A	Remote Position Indication, Exercise/2 Years Containment Isolation Leak Test Exercise Full Stroke/ Quarterly Operability Test	5
RWS-AOV-022	Refueling water storage pit purification return line containment isolation	Remote AO weir type diaphragm	Maintain Close Transfer Close	Active-to-Fail Containment Isolation Safety Seat Leakage Remote Position	A	Remote Position Indication, Exercise/2 Years Containment Isolation Leak Test Exercise Full Stroke/ Quarterly Operability Test	5
RWS-VLV-023	Refueling water storage pit purification return line containment isolation	Check	Maintain Close Transfer Close	Active Containment Isolation Safety Seat Leakage	AC	Containment Isolation Leak Test Check Exercise/ Refueling Outage	3 5
RWS-VLV-003	Refueling water storage pit purification line containment isolation check	Check	Maintain Close	Active Containment Isolation Safety Seat Leakage	AC	Containment Isolation Leak Test Check Exercise/ Refueling Outage	3 5

Table 3.9-14 Valve Inservice Test Requirements (Sheet 103 of 124)

Valve Tag Number	Description	Valve/ Actuator Type	Safety-Related Missions	Safety Functions(2)	ASME IST Category	Inservice Testing Type and Frequency	IST Notes
RWS-VLV-012A	Refueling water recirculation pump discharge check	Check	Transfer Open	Active	BC	Check Exercise/ Refueling Outage	
RWS-VLV-012B	Refueling water recirculation pump discharge check	Check	Transfer Open	Active	BC	Check Exercise/ Refueling Outage	
RWS-VLV-078	RWSP overflow pipe check valve	Check	Maintain Close	Passive	BC	Check Exercise/ Refueling Outage	3
RWS-VLV-079	RWSP overflow pipe check valve	Check	Maintain Close	Passive	BC	Check Exercise/ Refueling Outage	3
DWS-VLV-004	Demineralized water supply containment isolation	Manual	Maintain Close	Passive Containment Isolation Safety Seat Leakage	A	Containment Isolation Leak Test	5

Table 3.9-14 Valve Inservice Test Requirements (Sheet 104 of 124)

Valve Tag Number	Description	Valve/ Actuator Type	Safety-Related Missions	Safety Functions(2)	ASME IST Category	Inservice Testing Type and Frequency	IST Notes
DWS-VLV-005	Demineralized water supply containment isolation check	Check	Maintain Close	Active Containment Isolation Safety Seat Leakage	AC	Containment Isolation Leak Test Check Exercise/ Refueling Outage	3 5
IAS-MOV-002	Instrument air supply outside containment isolation	Remote MO Globe	Maintain Close Transfer Close	Active Containment Isolation Safety Seat Leakage Remote Position	A	Remote Position Indication, Exercise/2 Years Containment Isolation Leak Test Exercise Full Stroke/ Refueling Outage Operability Test	5 6
IAS-VLV-003	Instrument air supply containment isolation	Check	Maintain Close Transfer Close	Active Containment Isolation Safety Seat Leakage	AC	Containment Isolation Leak Test Check Exercise/ Refueling Outage	3 5
SAS-VLV-101	Station service air supply line containment isolation	Manual	Maintain Close	Containment Isolation Safety Seat Leakage	A	Containment Isolation Leak Test	5
SAS-VLV-103	Station service air supply line containment isolation check	Check	Maintain Close	Active Containment Isolation Safety Seat Leakage	AC	Containment Isolation Leak Test Check Exercise/ Refueling Outage	3 5

Table 3.9-14 Valve Inservice Test Requirements (Sheet 105 of 124)

Valve Tag Number	Description	Valve/ Actuator Type	Safety-Related Missions	Safety Functions(2)	ASME IST Category	Inservice Testing Type and Frequency	IST Notes
IGS-AOV-001	ICIGS line containment isolation	Remote AO weir type diaphragm	Maintain Close Transfer Close	Active-to-Fail Containment Isolation Safety Seat Leakage Remote Position	A	Remote Position Indication, Exercise/2 Years Containment Isolation Leak Test Exercise Full Stroke/ Cold Shut down Operability Test	5 6
IGS-AOV-002	ICIGS line containment isolation	Remote AO weir type diaphragm	Maintain Close Transfer Close	Active-to-Fail Containment Isolation Safety Seat Leakage Remote Position	A	Remote Position Indication, Exercise/2 Years Containment Isolation Leak Test Exercise Full Stroke/ Cold Shut down Operability Test	5 6
LTS-VLV-001	LRTS line containment isolation	Manual	Maintain Close	Containment Isolation Safety Seat Leakage	A	Containment Isolation Leak Test	5
LTS-VLV-002	LRTS line containment isolation	Manual	Maintain Close	Containment Isolation Safety Seat Leakage	A	Containment Isolation Leak Test	5
FSS-AOV-001	FPWSS line to filter unit containment isolation	Remote AO Globe	Maintain Close Transfer Close	Active-to-Fail Containment Isolation Safety Seat Leakage Remote Position	A	Remote Position Indication, Exercise/ 2 Years Containment Isolation Leak Test Exercise Full Stroke/ Cold Shut down Operability Test	5 6

Table 3.9-14 Valve Inservice Test Requirements (Sheet 106 of 124)

Valve Tag Number	Description	Valve/ Actuator Type	Safety-Related Missions	Safety Functions(2)	ASME IST Category	Inservice Testing Type and Frequency	IST Notes
FSS-VLV-003	FPWSS line to filter unit containment Isolation check	Check	Maintain Close Transfer Close	Active Containment Isolation Safety Seat Leakage	AC	Containment Isolation Leak Test Check Exercise/ Refueling Outage	3 5
FSS-MOV-004	FPWSS line to reactor cavity containment isolation	Remote MO Gate	Maintain Close	Containment Isolation Safety Seat Leakage	A	Containment Isolation Leak Test	5
FSS-VLV-006	FPWSS line to reactor cavity containment isolation check	Check	Maintain Close	Active Containment Isolation Safety Seat Leakage	AC	Containment Isolation Leak Test Check Exercise/ Refueling Outage	3 5
VCS-AOV-304	Containment High Volume Purge Supply Line Containment Isolation Outside of CV	Remote AO Butterfly	Maintain Close Transfer Close	Active-to-Failed Containment Isolation Safety Seat Leakage Remote Position	A	Remote Position Indication, Exercise/2 Years Containment Isolation Leak Test Exercise Full Stroke/ Cold Shutdown Operability Test	5
VCS-AOV-305	Containment High Volume Purge Supply Line Containment Isolation Inside of CV	Remote AO Butterfly	Maintain Close Transfer Close	Active-to-Failed Containment Isolation Safety Seat Leakage Remote Position	A	Remote Position Indication, Exercise/ 2 Years Containment Isolation Leak Test Exercise Full Stroke/ Cold Shutdown Operability Test	5

Table 3.9-14 Valve Inservice Test Requirements (Sheet 107 of 124)

Valve Tag Number	Description	Valve/ Actuator Type	Safety-Related Missions	Safety Functions(2)	ASME IST Category	Inservice Testing Type and Frequency	IST Notes
VCS-AOV-306	Containment High Volume Purge Exhaust Line Containment Isolation Inside of CV	Remote AO Butterfly	Maintain Close Transfer Close	Active-to-Failed Containment Isolation Safety Seat Leakage Remote Position	A	Remote Position Indication, Exercise/2 Years Containment Isolation Leak Test Exercise Full Stroke/ Cold Shutdown Operability Test	5
VCS-AOV-307	Containment High Volume Purge Exhaust Line Containment Isolation Outside of CV	Remote AO Butterfly	Maintain Close Transfer Close	Active-to-Failed Containment Isolation Safety Seat Leakage Remote Position	A	Remote Position Indication, Exercise/2 Years Containment Isolation Leak Test Exercise Full Stroke/ Cold Shutdown Operability Test	5
VCS-AOV-354	Containment Low Volume Purge Supply Line Containment Isolation Outside of CV	Remote AO Butterfly	Maintain Close Transfer Close	Active-to-Failed Containment Isolation Safety Seat Leakage Remote Position	A	Remote Position Indication, Exercise/2 Years Containment Isolation Leak Test Exercise Full Stroke/ Cold Shutdown Operability Test	5
VCS-AOV-355	Containment Low Volume Purge Supply Line Containment Isolation Inside of CV	Remote AO Butterfly	Maintain Close Transfer Close	Active-to-Failed Containment Isolation Safety Seat Leakage Remote Position	A	Remote Position Indication, Exercise/2 Years Containment Isolation Leak Test Exercise Full Stroke/ Cold Shutdown Operability Test	5

Table 3.9-14 Valve Inservice Test Requirements (Sheet 108 of 124)

Valve Tag Number	Description	Valve/ Actuator Type	Safety-Related Missions	Safety Functions(2)	ASME IST Category	Inservice Testing Type and Frequency	IST Notes
VCS-AOV-356	Containment Low Volume Purge Exhaust Line Containment Isolation Inside of CV	Remote AO Butterfly	Maintain Close Transfer Close	Active-to-Failed Containment Isolation Safety Seat Leakage Remote Position	A	Remote Position Indication, Exercise/2 Years Containment Isolation Leak Test Exercise Full Stroke/ Cold Shutdown Operability Test	5
VCS-AOV-357	Containment Low Volume Purge Exhaust Line Containment Isolation Outside of CV	Remote AO Butterfly	Maintain Close Transfer Close	Active-to-Failed Containment Isolation Safety Seat Leakage Remote Position	A	Remote Position Indication, Exercise/2 Years Containment Isolation Leak Test Exercise Full Stroke/ Cold Shutdown Operability Test	5
VWS-TCV-141	Main Control Room Air Handling Unit Cooling Coil Chilled Water Control	Remote AO 3-way	Transfer Open	Active-to-Failed Remote Position	B	Remote Position Indication, Exercise/2 Years Exercise Full Stroke/ Quarterly Operability Test	6
VWS-TCV-151	Main Control Room Air Handling Unit Cooling Coil Chilled Water Control	Remote AO 3-way	Transfer Open	Active-to-Failed Remote Position	B	Remote Position Indication, Exercise/2 Years Exercise Full Stroke/ Quarterly Operability Test	6

Table 3.9-14 Valve Inservice Test Requirements (Sheet 109 of 124)

Valve Tag Number	Description	Valve/ Actuator Type	Safety-Related Missions	Safety Functions(2)	ASME IST Category	Inservice Testing Type and Frequency	IST Notes
VWS-TCV-161	Main Control Room Air Handling Unit Cooling Coil Chilled Water Control	Remote AO 3-way	Transfer Open	Active-to-Failed Remote Position	B	Remote Position Indication, Exercise/2 Years Exercise Full Stroke/ Quarterly Operability Test	6
VWS-TCV-171	Main Control Room Air Handling Unit Cooling Coil Chilled Water Control	Remote AO 3-way	Transfer Open	Active-to-Failed Remote Position	B	Remote Position Indication, Exercise/2 Years Exercise Full Stroke/ Quarterly Operability Test	6
VWS-TCV-206	Class 1E Electrical Room Air Handling Unit Cooling Coil Chilled Water Control	Remote AO 3-way	Transfer Open	Active-to-Failed Remote Position	B	Remote Position Indication, Exercise/2 Years Exercise Full Stroke/ Quarterly Operability Test	6
VWS-TCV-226	Class 1E Electrical Room Air Handling Unit Cooling Coil Chilled Water Control	Remote AO 3-way	Transfer Open	Active-to-Failed Remote Position	B	Remote Position Indication, Exercise/2 Years Exercise Full Stroke/ Quarterly Operability Test	6
VWS-TCV-246	Class 1E Electrical Room Air Handling Unit Cooling Coil Chilled Water Control	Remote AO 3-way	Transfer Open	Active-to-Failed Remote Position	B	Remote Position Indication, Exercise/2 Years Exercise Full Stroke/ Quarterly Operability Test	6

Table 3.9-14 Valve Inservice Test Requirements (Sheet 110 of 124)

Valve Tag Number	Description	Valve/ Actuator Type	Safety-Related Missions	Safety Functions(2)	ASME IST Category	Inservice Testing Type and Frequency	IST Notes
VWS-TCV-266	Class 1E Electrical Room Air Handling Unit Cooling Coil Chilled Water Control	Remote AO 3-way	Transfer Open	Active-to-Failed Remote Position	B	Remote Position Indication, Exercise/2 Years Exercise Full Stroke/ Quarterly Operability Test	6
VWS-TCV-304	Safeguard Component Area Air Handling Unit Cooling Coil Chilled Water Control	Remote AO 3-way	Transfer Open	Active-to-Failed Remote Position	B	Remote Position Indication, Exercise/2 Years Exercise Full Stroke/ Quarterly Operability Test	
VWS-TCV-314	Safeguard Component Area Air Handling Unit Cooling Coil Chilled Water Control	Remote AO 3-way	Transfer Open	Active-to-Failed Remote Position	B	Remote Position Indication, Exercise/2 Years Exercise Full Stroke/ Quarterly Operability Test	
VWS-TCV-324	Safeguard Component Area Air Handling Unit Cooling Coil Chilled Water Control	Remote AO 3-way	Transfer Open	Active-to-Failed Remote Position	B	Remote Position Indication, Exercise/2 Years Exercise Full Stroke/ Quarterly Operability Test	
VWS-TCV-334	Safeguard Component Area Air Handling Unit Cooling Coil Chilled Water Control	Remote AO 3-way	Transfer Open	Active-to-Failed Remote Position	B	Remote Position Indication, Exercise/2 Years Exercise Full Stroke/ Quarterly Operability Test	

Table 3.9-14 Valve Inservice Test Requirements (Sheet 111 of 124)

Valve Tag Number	Description	Valve/ Actuator Type	Safety-Related Missions	Safety Functions(2)	ASME IST Category	Inservice Testing Type and Frequency	IST Notes
VWS-TCV-402	Emergency Feedwater Pump Area Air Handling Unit Cooling Coil Chilled Water Control	Remote AO 3-way	Transfer Open	Active-to-Failed Remote Position	B	Remote Position Indication, Exercise/2 Years Exercise Full Stroke/ Quarterly Operability Test	
VWS-TCV-412	Emergency Feedwater Pump Area Air Handling Unit Cooling Coil Chilled Water Control	Remote AO 3-way	Transfer Open	Active-to-Failed Remote Position	B	Remote Position Indication, Exercise/2 Years Exercise Full Stroke/ Quarterly Operability Test	
VWS-TCV-422	Emergency Feedwater Pump Area Air Handling Unit Cooling Coil Chilled Water Control	Remote AO 3-way	Transfer Open	Active-to-Failed Remote Position	B	Remote Position Indication, Exercise/2 Years Exercise Full Stroke/ Quarterly Operability Test	
VWS-TCV-432	Emergency Feedwater Pump Area Air Handling Unit Cooling Coil Chilled Water Control	Remote AO 3-way	Transfer Open	Active-to-Failed Remote Position	B	Remote Position Indication, Exercise/2 Years Exercise Full Stroke/ Quarterly Operability Test	
VWS-TCV-502	Component Cooling Water Pump Area Air Handling Unit Cooling Coil Chilled Water Control	Remote AO 3-way	Transfer Open	Active-to-Failed Remote Position	B	Remote Position Indication, Exercise/2 Years Exercise Full Stroke/ Quarterly Operability Test	

Table 3.9-14 Valve Inservice Test Requirements (Sheet 112 of 124)

Valve Tag Number	Description	Valve/ Actuator Type	Safety-Related Missions	Safety Functions(2)	ASME IST Category	Inservice Testing Type and Frequency	IST Notes
VWS-TCV-512	Component Cooling Water Pump Area Air Handling Unit Cooling Coil Chilled Water Control	Remote AO 3-way	Transfer Open	Active-to-Failed Remote Position	B	Remote Position Indication, Exercise/2 Years Exercise Full Stroke/ Quarterly Operability Test	
VWS-TCV-522	Component Cooling Water Pump Area Air Handling Unit Cooling Coil Chilled Water Control	Remote AO 3-way	Transfer Open	Active-to-Failed Remote Position	B	Remote Position Indication, Exercise/2 Years Exercise Full Stroke/ Quarterly Operability Test	
VWS-TCV-532	Component Cooling Water Pump Area Air Handling Unit Cooling Coil Chilled Water Control	Remote AO 3-way	Transfer Open	Active-to-Failed Remote Position	B	Remote Position Indication, Exercise/2 Years Exercise Full Stroke/ Quarterly Operability Test	
VWS-TCV-542	Essential Chiller Unit Area Air Handling Unit Cooling Coil Chilled Water Control	Remote AO 3-way	Transfer Open	Active-to-Failed Remote Position	B	Remote Position Indication, Exercise/2 Years Exercise Full Stroke/ Quarterly Operability Test	
VWS-TCV-552	Essential Chiller Unit Area Air Handling Unit Cooling Coil Chilled Water Control	Remote AO 3-way	Transfer Open	Active-to-Failed Remote Position	B	Remote Position Indication, Exercise/2 Years Exercise Full Stroke/ Quarterly Operability Test	

Table 3.9-14 Valve Inservice Test Requirements (Sheet 113 of 124)

Valve Tag Number	Description	Valve/ Actuator Type	Safety-Related Missions	Safety Functions(2)	ASME IST Category	Inservice Testing Type and Frequency	IST Notes
VWS-TCV-562	Essential Chiller Unit Area Air Handling Unit Cooling Coil Chilled Water Control	Remote AO 3-way	Transfer Open	Active-to-Failed Remote Position	B	Remote Position Indication, Exercise/2 Years Exercise Full Stroke/ Quarterly Operability Test	
VWS-TCV-572	Essential Chiller Unit Area Air Handling Unit Cooling Coil Chilled Water Control	Remote AO 3-way	Transfer Open	Active-to-Failed Remote Position	B	Remote Position Indication, Exercise/2 Years Exercise Full Stroke/ Quarterly Operability Test	
VWS-TCV-582	Charging Pump Area Air Handling Unit Cooling Coil Chilled Water Control	Remote AO 3-way	Transfer Open	Active-to-Failed Remote Position	B	Remote Position Indication, Exercise/2 Years Exercise Full Stroke/ Quarterly Operability Test	
(Deleted)							
VWS-TCV-592	Charging Pump Area Air Handling Unit Cooling Coil Chilled Water Control	Remote AO 3-way	Transfer Open	Active-to-Failed Remote Position	B	Remote Position Indication, Exercise/2 Years Exercise Full Stroke/ Quarterly Operability Test	
(Deleted)							

Table 3.9-14 Valve Inservice Test Requirements (Sheet 114 of 124)

Valve Tag Number	Description	Valve/ Actuator Type	Safety-Related Missions	Safety Functions(2)	ASME IST Category	Inservice Testing Type and Frequency	IST Notes
VWS-TCV-602A	Annulus Emergency Exhaust Filtration Unit Area Air Handling Unit Cooling Coil Chilled Water Control	Remote AO 3-way	Transfer Open	Active-to-Failed Remote Position	B	Remote Position Indication, Exercise/2 Years Exercise Full Stroke/ Quarterly Operability Test	
VWS-TCV-602B	Annulus Emergency Exhaust Filtration Unit Area Air Handling Unit Cooling Coil Chilled Water Control	Remote AO 3-way	Transfer Open	Active-to-Failed Remote Position	B	Remote Position Indication, Exercise/2 Years Exercise Full Stroke/ Quarterly Operability Test	
VWS-TCV-612A	Annulus Emergency Exhaust Filtration Unit Area Air Handling Unit Cooling Coil Chilled Water Control	Remote AO 3-way	Transfer Open	Active-to-Failed Remote Position	B	Remote Position Indication, Exercise/2 Years Exercise Full Stroke/ Quarterly Operability Test	
VWS-TCV-612B	Annulus Emergency Exhaust Filtration Unit Area Air Handling Unit Cooling Coil Chilled Water Control	Remote AO 3-way	Transfer Open	Active-to-Failed Remote Position	B	Remote Position Indication, Exercise/2 Years Exercise Full Stroke/ Quarterly Operability Test	

Table 3.9-14 Valve Inservice Test Requirements (Sheet 115 of 124)

Valve Tag Number	Description	Valve/ Actuator Type	Safety-Related Missions	Safety Functions(2)	ASME IST Category	Inservice Testing Type and Frequency	IST Notes
VWS-TCV-622	Penetration Area Air Handling Unit Cooling Coil Chilled Water Control	Remote AO 3-way	Transfer Open	Active-to-Failed Remote Position	B	Remote Position Indication, Exercise/2 Years Exercise Full Stroke/ Quarterly Operability Test	
VWS-TCV-632	Penetration Area Air Handling Unit Cooling Coil Chilled Water Control	Remote AO 3-way	Transfer Open	Active-to-Failed Remote Position	B	Remote Position Indication, Exercise/2 Years Exercise Full Stroke/ Quarterly Operability Test	
VWS-TCV-642	Penetration Area Air Handling Unit Cooling Coil Chilled Water Control	Remote AO 3-way	Transfer Open	Active-to-Failed Remote Position	B	Remote Position Indication, Exercise/2 Years Exercise Full Stroke/ Quarterly Operability Test	
VWS-TCV-652	Penetration Area Air Handling Unit Cooling Coil Chilled Water Control	Remote AO 3-way	Transfer Open	Active-to-Failed Remote Position	B	Remote Position Indication, Exercise/2 Years Exercise Full Stroke/ Quarterly Operability Test	
VWS-TCV-662A	Spent Fuel Pit Pump Area Air Handling Unit Cooling Coil Chilled Water Control	Remote AO 3-way	Transfer Open	Active-to-Failed Remote Position	B	Remote Position Indication, Exercise/2 Years Exercise Full Stroke/ Quarterly Operability Test	

Table 3.9-14 Valve Inservice Test Requirements (Sheet 116 of 124)

Valve Tag Number	Description	Valve/ Actuator Type	Safety-Related Missions	Safety Functions(2)	ASME IST Category	Inservice Testing Type and Frequency	IST Notes
VWS-TCV-662B	Spent Fuel Pit Pump Area Air Handling Unit Cooling Coil Chilled Water Control	Remote AO 3-way	Transfer Open	Active-to-Failed Remote Position	B	Remote Position Indication, Exercise/2 Years Exercise Full Stroke/ Quarterly Operability Test	
VWS-TCV-672A	Spent Fuel Pit Pump Area Air Handling Unit Cooling Coil Chilled Water Control	Remote AO 3-way	Transfer Open	Active-to-Failed Remote Position	B	Remote Position Indication, Exercise/2 Years Exercise Full Stroke/ Quarterly Operability Test	
VWS-TCV-672B	Spent Fuel Pit Pump Area Air Handling Unit Cooling Coil Chilled Water Control	Remote AO 3-way	Transfer Open	Active-to-Failed Remote Position	B	Remote Position Indication, Exercise/2 Years Exercise Full Stroke/ Quarterly Operability Test	
VWS-VLV-005A	Essential Chilled Water Pump Discharge Check	Check	Maintain Open Transfer Open Transfer Close	Active	BC	Check Exercise/ Refueling Outage	3
VWS-VLV-005B	Essential Chilled Water Pump Discharge Check	Check	Maintain Open Transfer Open Transfer Close	Active	BC	Check Exercise/ Refueling Outage	3
VWS-VLV-005C	Essential Chilled Water Pump Discharge Check	Check	Maintain Open Transfer Open Transfer Close	Active	BC	Check Exercise/ Refueling Outage	3
VWS-VLV-005D	Essential Chilled Water Pump Discharge Check	Check	Maintain Open Transfer Open Transfer Close	Active	BC	Check Exercise/ Refueling Outage	3

Table 3.9-14 Valve Inservice Test Requirements (Sheet 117 of 124)

Valve Tag Number	Description	Valve/ Actuator Type	Safety-Related Missions	Safety Functions(2)	ASME IST Category	Inservice Testing Type and Frequency	IST Notes
VWS-SRV-253A	Essential Chilled Water Compression Tank Relief	Relief	Maintain Close Transfer Open Transfer Close	Active	BC	Class 2/3 Relief Valve Tests/10 Years and 20% in 4 Years	
VWS-SRV-253B	Essential Chilled Water Compression Tank Relief	Relief	Maintain Close Transfer Open Transfer Close	Active	BC	Class 2/3 Relief Valve Tests/10 Years and 20% in 4 Years	
VWS-SRV-253C	Essential Chilled Water Compression Tank Relief	Relief	Maintain Close Transfer Open Transfer Close	Active	BC	Class 2/3 Relief Valve Tests/10 Years and 20% in 4 Years	
VWS-SRV-253D	Essential Chilled Water Compression Tank Relief	Relief	Maintain Close Transfer Open Transfer Close	Active	BC	Class 2/3 Relief Valve Tests/10 Years and 20% in 4 Years	
VWS-VLV-252A	Nitrogen Supply Isolation	Check	Maintain Close	Active	BC	Check Exercise / Refueling Outage	3
VWS-VLV-252B	Nitrogen Supply Isolation	Check	Maintain Close	Active	BC	Check Exercise / Refueling Outage	3
VWS-VLV-252C	Nitrogen Supply Isolation	Check	Maintain Close	Active	BC	Check Exercise / Refueling Outage	3
VWS-VLV-252D	Nitrogen Supply Isolation	Check	Maintain Close	Active	BC	Check Exercise / Refueling Outage	3
VWS-VLV-258A	Makeup Isolation	Check	Maintain Close	Active	BC	Check Exercise / Refueling Outage	3
VWS-VLV-258B	Makeup Isolation	Check	Maintain Close	Active	BC	Check Exercise / Refueling Outage	3

Table 3.9-14 Valve Inservice Test Requirements (Sheet 118 of 124)

Valve Tag Number	Description	Valve/ Actuator Type	Safety-Related Missions	Safety Functions(2)	ASME IST Category	Inservice Testing Type and Frequency	IST Notes
VWS-VLV-258C	Makeup Isolation	Check	Maintain Close	Active	BC	Check Exercise / Refueling Outage	3
VWS-VLV-258D	Makeup Isolation	Check	Maintain Close	Active	BC	Check Exercise / Refueling Outage	3
VWS-MOV-403	Containment Fan Cooler Chilled Water Inlet Containment Isolation Outside of CV	Remote MO Gate	Maintain Close Transfer Close	Active Containment Isolation Safety Seat Leakage Remote Position	A	Remote Position Indication, Exercise/2 Years Containment Isolation Leak Test Exercise Full Stroke/ Cold Shutdown Operability Test	5 6
VWS-MOV-407	Containment Fan Cooler Chilled Water Outlet Containment Isolation Outside of CV	Remote MO Gate	Maintain Close Transfer Close	Active Containment Isolation Safety Seat Leakage Remote Position	A	Remote Position Indication, Exercise/2 Years Containment Isolation Leak Test Exercise Full Stroke/ Cold Shutdown Operability Test	5 6
VWS-MOV-422	Containment Fan Cooler Chilled Water Outlet Containment Isolation Inside of CV	Remote MO Gate	Maintain Close Transfer Close	Active Containment Isolation Safety Seat Leakage Remote Position	A	Remote Position Indication, Exercise/ 2 Years Containment Isolation Leak Test Exercise Full Stroke/ Cold Shutdown Operability Test	5 6

Table 3.9-14 Valve Inservice Test Requirements (Sheet 119 of 124)

Valve Tag Number	Description	Valve/ Actuator Type	Safety-Related Missions	Safety Functions(2)	ASME IST Category	Inservice Testing Type and Frequency	IST Notes
VWS-VLV-421	Containment Fan Cooler Chilled Water Inlet Containment Isolation Inside of CV	Check	Maintain Close Transfer Close	Active Containment Isolation Safety Seat Leakage	AC	Check Exercise/ Refueling Outage	5 3
VWS-VLV-423	Containment Fan Cooler Chilled Water Outlet Containment Isolation Inside of CV	Check	Maintain Close Transfer Close	Active Containment Isolation Safety Seat Leakage	AC	Check Exercise/ Refueling Outage	5 3
RMS-MOV-001	Containment Air Sampling Line Containment Isolation Inside of CV	Remote MO Globe	Maintain Close Transfer Close	Active Containment Isolation Safety Seat Leakage Remote Position	A	Remote Position Indication, Exercise/2 Years Containment Isolation Leak Test Exercise Full Stroke/ Cold Shutdown Operability Test	5 6
RMS-MOV-002	Containment Air Sampling Line Containment Isolation Outside of CV	Remote MO Globe	Maintain Close Transfer Close	Active Containment Isolation Safety Seat Leakage Remote Position	A	Remote Position Indication, Exercise/2 Years Containment Isolation Leak Test Exercise Full Stroke/ Cold Shutdown Operability Test	5 6

Table 3.9-14 Valve Inservice Test Requirements (Sheet 120 of 124)

Valve Tag Number	Description	Valve/ Actuator Type	Safety-Related Missions	Safety Functions(2)	ASME IST Category	Inservice Testing Type and Frequency	IST Notes
RMS-MOV-003	Containment Air Sampling Return Line Containment Isolation Outside of CV	Remote MO Globe	Maintain Close Transfer Close	Active Containment Isolation Safety Seat Leakage Remote Position	A	Remote Position Indication, Exercise/2 Years Containment Isolation Leak Test Exercise Full Stroke/ Cold Shutdown Operability Test	5 6
RMS-VLV-005	Containment Air Sampling Return Line Containment Isolation Check Inside of CV	Check	Maintain Close Transfer Close	Active Containment Isolation Safety Seat Leakage	AC	Containment Isolation Leak Test Check Exercise/ Refueling Outage	3 5
NCS-SRV-406A	Reactor coolant pump component cooling water outlet relief	Relief	Maintain Close Transfer Open Transfer Close	Active	BC	Class 2/3 Relief Valve Tests/10 Years	
NCS-SRV-406B	Reactor coolant pump component cooling water outlet relief	Relief	Maintain Close Transfer Open Transfer Close	Active	BC	Class 2/3 Relief Valve Tests/10 Years	
NCS-SRV-406C	Reactor coolant pump component cooling water outlet relief	Relief	Maintain Close Transfer Open Transfer Close	Active	BC	Class 2/3 Relief Valve Tests/10 Years	
NCS-SRV-406D	Reactor coolant pump component cooling water outlet relief	Relief	Maintain Close Transfer Open Transfer Close	Active	BC	Class 2/3 Relief Valve Tests/10 Years	

Table 3.9-14 Valve Inservice Test Requirements (Sheet 121 of 124)

Valve Tag Number	Description	Valve/ Actuator Type	Safety-Related Missions	Safety Functions(2)	ASME IST Category	Inservice Testing Type and Frequency	IST Notes
NCS-SRV-513	Excess letdown heat exchanger component cooling water outlet line relief	Relief	Maintain Close Transfer Open Transfer Close	Active	BC	Class 2/3 Relief Valve Tests/10 Years	
NCS-SRV-533	Letdown heat exchanger component cooling water outlet line relief	Relief	Maintain Close Transfer Open Transfer Close	Active	BC	Class 2/3 Relief Valve Tests/10 Years	
NCS-SRV-035A	Component cooling water A1/ A2 return line relief	Relief	Maintain Close Transfer Open Transfer Close	Active	BC	Class 2/3 Relief Valve Tests/10 Years	
NCS-SRV-035B	Component cooling water C1/ C2 return line relief	Relief	Maintain Close Transfer Open Transfer Close	Active	BC	Class 2/3 Relief Valve Tests/10 Years	
GTS-VLV-001A,B,C,D	Fuel oil storage tank outlet check	Check	Transfer Open	Active	BC	Check Exercise/ Quarterly	
GTS-VLV-004A,B,C,D	Fuel oil transfer pump discharge check	Check	Transfer Open	Active	BC	Check Exercise/ Quarterly	
GTS-VLV-005A,B,C,D	Fuel oil transfer pump discharge check	Check	Transfer Open	Active	BC	Check Exercise/ Quarterly	
GTS-VLV-101A,B,C,D	Air start valve	Remote AO Globe	Transfer Open	Active	B	Exercise Full Stroke/ Quarterly	14
GTS-VLV-102A,B,C,D	Air start valve	Remote AO Globe	Transfer Open	Active	B	Exercise Full Stroke/ Quarterly	14

Table 3.9-14 Valve Inservice Test Requirements (Sheet 122 of 124)

Valve Tag Number	Description	Valve/ Actuator Type	Safety-Related Missions	Safety Functions(2)	ASME IST Category	Inservice Testing Type and Frequency	IST Notes
GTS-VLV-103A,B,C,D	Air start valve	Remote AO Globe	Transfer Open	Active	B	Exercise Full Stroke/ Quarterly	14
GTS-VLV-104A,B,C,D	Air start valve	Remote AO Globe	Transfer Open	Active	B	Exercise Full Stroke/ Quarterly	14
GTS-SOV-109A,B,C,D	Air start pilot valve	Remote SO 3way	Transfer Open	Active	B	Exercise Full Stroke/ Quarterly	
GTS-SOV-110A,B,C,D	Air start pilot valve	Remote SO 3way	Transfer Open	Active	B	Exercise Full Stroke/ Quarterly	
GTS-VLV-117A,B,C,D	Air receiver inlet check	Check	Transfer Close	Active	BC	Check Exercise/ Quarterly	
GTS-VLV-118A,B,C,D	Air receiver inlet check	Check	Transfer Close	Active	BC	Check Exercise/ Quarterly	
GTS-VLV-123A,B,C,D	Air receiver relief valve	Relief	Maintain Close Transfer Open Transfer Close	Active	BC	Class 2/3 Relief Valve Tests/10 Years and 20% in 4 Years	
GTS-VLV-124A,B,C,D	Air receiver relief valve	Relief	Maintain Close Transfer Open Transfer Close	Active	BC	Class 2/3 Relief Valve Tests/10 Years and 20% in 4 Years	
GTS-VLV-161A,B,C,D	Air start outlet check	Check	Transfer Close	Active	BC	Check Exercise/ Quarterly	
GTS-VLV-162A,B,C,D	Air start outlet check	Check	Transfer Close	Active	BC	Check Exercise/ Quarterly	
GTS-VLV-163A,B,C,D	Air start outlet check	Check	Transfer Close	Active	BC	Check Exercise/ Quarterly	
GTS-VLV-164A,B,C,D	Air start outlet check	Check	Transfer Close	Active	BC	Check Exercise/ Quarterly	

Table 3.9-14 Valve Inservice Test Requirements (Sheet 123 of 124)

Valve Tag Number	Description	Valve/ Actuator Type	Safety-Related Missions	Safety Functions(2)	ASME IST Category	Inservice Testing Type and Frequency	IST Notes
SFS-VLV-133A	Spent fuel pit purification subsystem outlet isolation	Manual	Transfer Close	Active	B	Exercise Full Stroke/ 5 Years	
SFS-VLV-133B	Spent fuel pit purification subsystem outlet isolation	Manual	Transfer Close	Active	B	Exercise Full Stroke/ 5 Years	
RCS-MOV-118	Depressurization valve for severe accident	Remote MO Globe	Maintain Close Transfer Open Transfer Close	Active RCS Pressure Boundary Remote Position	A	Remote Position Indication, Exercise/ 2 Years Exercise Full Stroke/ Cold Shutdown Operability Test Leak Test/ Refueling Outage	2 15
RCS-MOV-119	Depressurization valve for severe accident	Remote MO Globe	Maintain Close Transfer Open Transfer Close	Active RCS Pressure Boundary Remote Position	A	Remote Position Indication, Exercise/ 2 Years Exercise Full Stroke/ Cold Shutdown Operability Test Leak Test/ Refueling Outage	2 15
RHS-AOV-024B	Low Pressure Letdown Line Isolation	Remote AO Globe	Maintain Close Transfer Close	Active-to-Fail Remote Position	B	Remote Position Indication, Exercise/ 2 Years Exercise Full Stroke/ Quarterly Operability Test	

Table 3.9-14 Valve Inservice Test Requirements (Sheet 124 of 124)

Valve Tag Number	Description	Valve/ Actuator Type	Safety-Related Missions	Safety Functions(2)	ASME IST Category	Inservice Testing Type and Frequency	IST Notes
RHS-AOV-024C	Low Pressure Letdown Line Isolation	Remote AO Globe	Maintain Close Transfer Close	Active-to-Fail Remote Position	B	Remote Position Indication, Exercise/ 2 Years Exercise Full Stroke/ Quarterly Operability Test	
MSS-PCV-515	Main Steam Relief Valve	Remote AO Globe	Transfer Close Maintain Close	Active-to-Fail Remote Position	B	Remote Position Indication, Exercise/ 2 Years Exercise Full Stroke/ Cold shutdown Operability Test	4
MSS-PCV-525	Main Steam Relief Valve	Remote AO Globe	Transfer Close Maintain Close	Active-to-Fail Remote Position	B	Remote Position Indication, Exercise/ 2 Years Exercise Full Stroke/ Cold shutdown Operability Test	4
MSS-PCV-535	Main Steam Relief Valve	Remote AO Globe	Transfer Close Maintain Close	Active-to-Fail Remote Position	B	Remote Position Indication, Exercise/ 2 Years Exercise Full Stroke/ Cold shutdown Operability Test	4
MSS-PCV-545	Main Steam Relief Valve	Remote AO Globe	Transfer Close Maintain Close	Active-to-Fail Remote Position	B	Remote Position Indication, Exercise/ 2 Years Exercise Full Stroke/ Cold shutdown Operability Test	4

Notes:
1. This note applies to the pressurizer safety valves and to the main steam safety valves. Their position indication sensors are tested during set-pressure testing required in I-8100 of the ASME OM Code, Mandatory Appendix I.

2. These valves are normally closed to maintain the reactor coolant system pressure boundary. These valves are tested during cold shutdowns when the reactor coolant system pressure is reduced to atmospheric pressure so that an opening of this valve during this IST will not cause a LOCA.
3. The check valve exercise test is performed during refueling outage. Valves in the inaccessible primary containment can not be tested during power operation. Test of valves in operating systems may cause impact of power operation. Simultaneous testing of valves in the same system group will be considered.
4. Test of these valves at power will result in an undesirable transient on the reactor coolant system or the steam generator secondary system. Therefore, exercise testing will be performed at cold shutdown to avoid impact on power operation.
5. Containment isolation valves leakage test frequency will be conducted in accordance with the “primary containment leakage rate test program” in accordance with 10 CFR 50 Appendix J.
6. Exercising these valves would stop necessary line for operation such as utilities etc. Therefore, exercise testing will be performed at cold shutdown to avoid impact on power operation.
7. Exercising these valves would stop seal injection/ return water or cooling water of the reactor coolant pumps. Such stop of water may result in damage to the reactor coolant pump or reactor trip. These valves are exercised during cold shutdowns when these components do not require the water flow.
8. These valves isolate the low pressure system from the high pressure the reactor coolant system. Opening during normal operation may result in damage of equipment or reactor trip. These valves are exercised during cold shutdowns.
9. Exercising these valves during power operation would cause a loss of necessary safety function for power operation that needs big efforts to recover it. These valves will be exercised during cold shutdowns.
10. The residual heat removal system hot leg suction containment isolation valves and cold leg discharge containment isolation valves are not containment isolation leak tested. The basis for the exception is:
    - Should the valves leak slightly when closed, the fluid seal within the pipe or the closed piping system outside containment would preclude release of containment atmosphere to the environment
    - During post-accident operations, the system is filled with recirculation water. During normal operation, the system is water filled, and degradation of valves or piping is readily detected
    - The residual heat removal system is a closed loop system, seismically-designed and designed as Quality Group B with a portion of outside containment.
    - The residual heat removal system valves are closed when the plant is in modes above hot shutdown.
11. This note applies to the main steam isolation valves and main feed water isolation valves. The valves are not full stroke tested quarterly at power since full valve stroking will result in a plant transient during normal power operation. These valves will be exercised during hot standby condition.
12. Full-stroke exercise of main steam check valves can not be practically established. Main steam check valves are tested by alternate method (disassembly) during refueling outage as described in the Generic Letter 89-04.
13. Exercising these valves during power operation would cause a loss of necessary safety function for power operation that needs big efforts to recover it. These valves will be exercised during hot shutdown before cooling down for refueling outage.
14. This note applies to the air start pilot valves in the GTG starting system. These valves are operated with specific air source installed in the GTG starting system.
15. Technical Specification surveillance requirement SR 3.4.14.1 will be used for the valve leakage acceptance criteria.

Table 3.9-15 Load combinations and stress limits for Secondary Core Support Structures

Operating conditions	Load Conditions	Occurance	Stress limit	Remarks
Design	Design load combination for CS(1)	-	Design for CS(2)	(1) Table 3.9-11 (2) Table 3.9-12
Beyond design basis accidents	Core drop load	1	Level D for CS(3) + No buckling	(3) Table 3.9-12

Note: 'CS' means Core Support Structures.

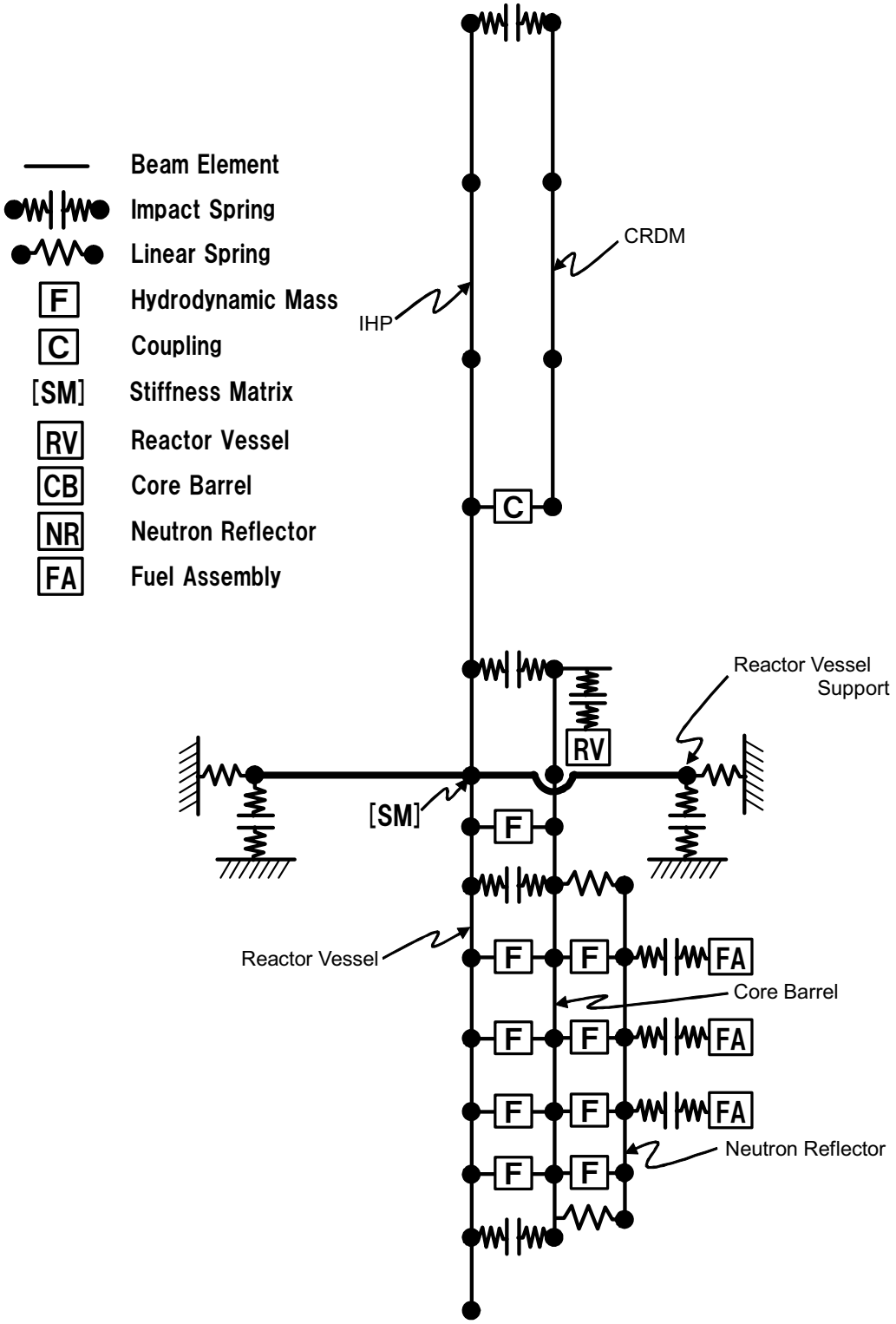

Figure 3.9-1 Typical Mathematical Model of the Reactor Internals for the Seismic and LOCA Dynamic Analysis (RV, Lower Reactor Internals and CRDM)

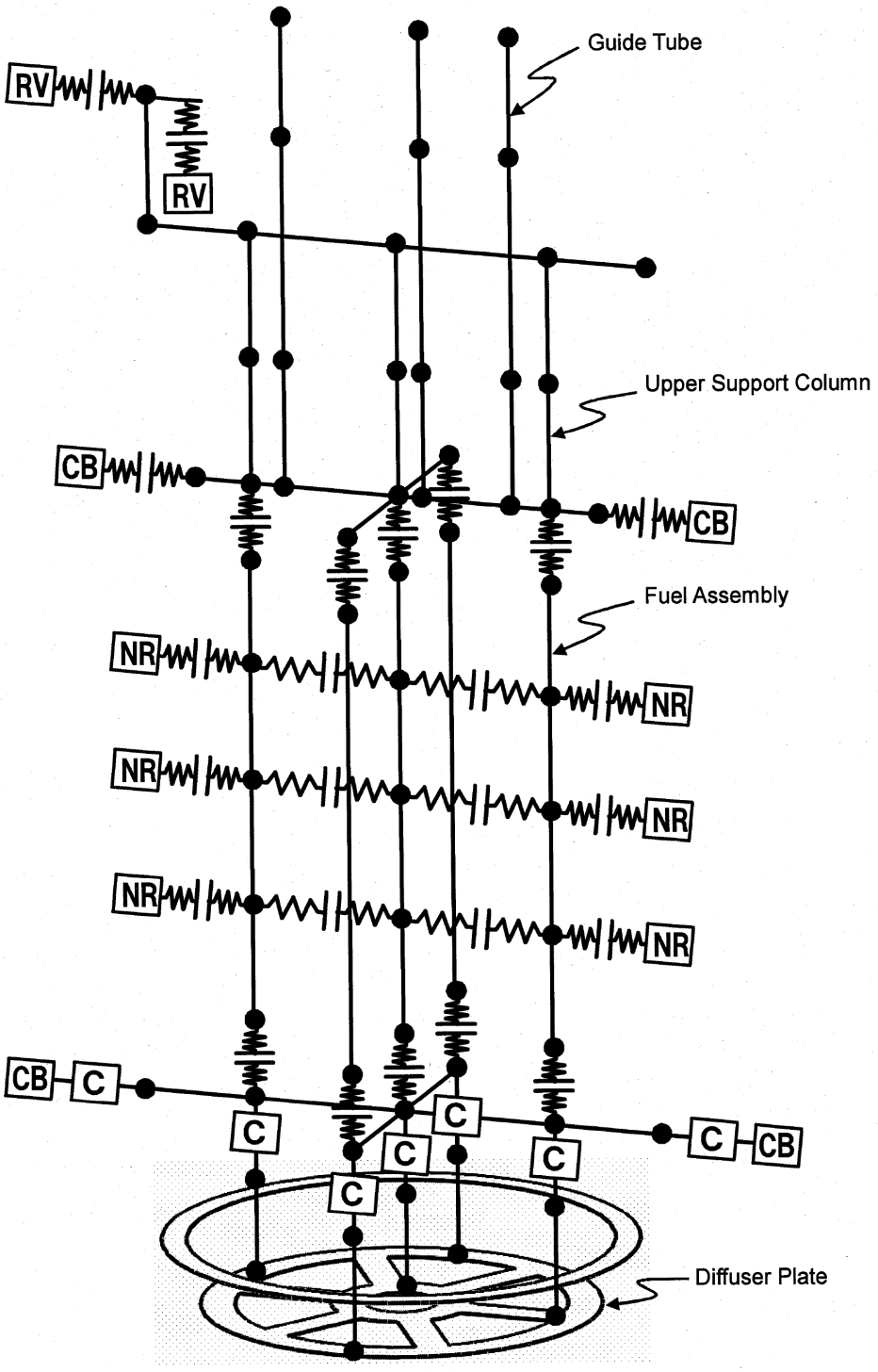

Figure 3.9-2 Typical Mathematical Model for the Seismic and LOCA Dynamic Analysis (Fuel Assembly, Upper Reactor Internals and Diffuser Plate)

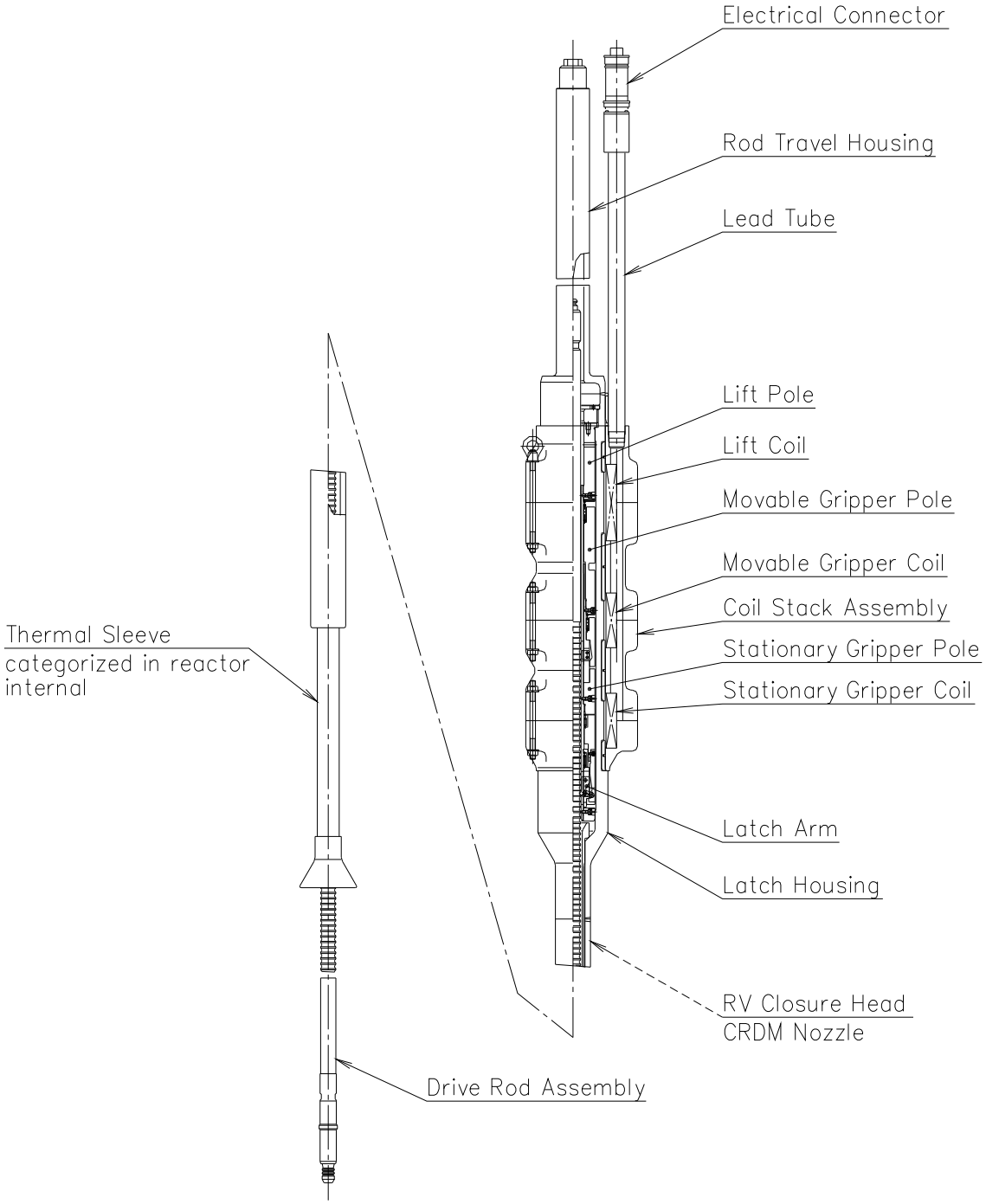

Figure 3.9-3 CRDM

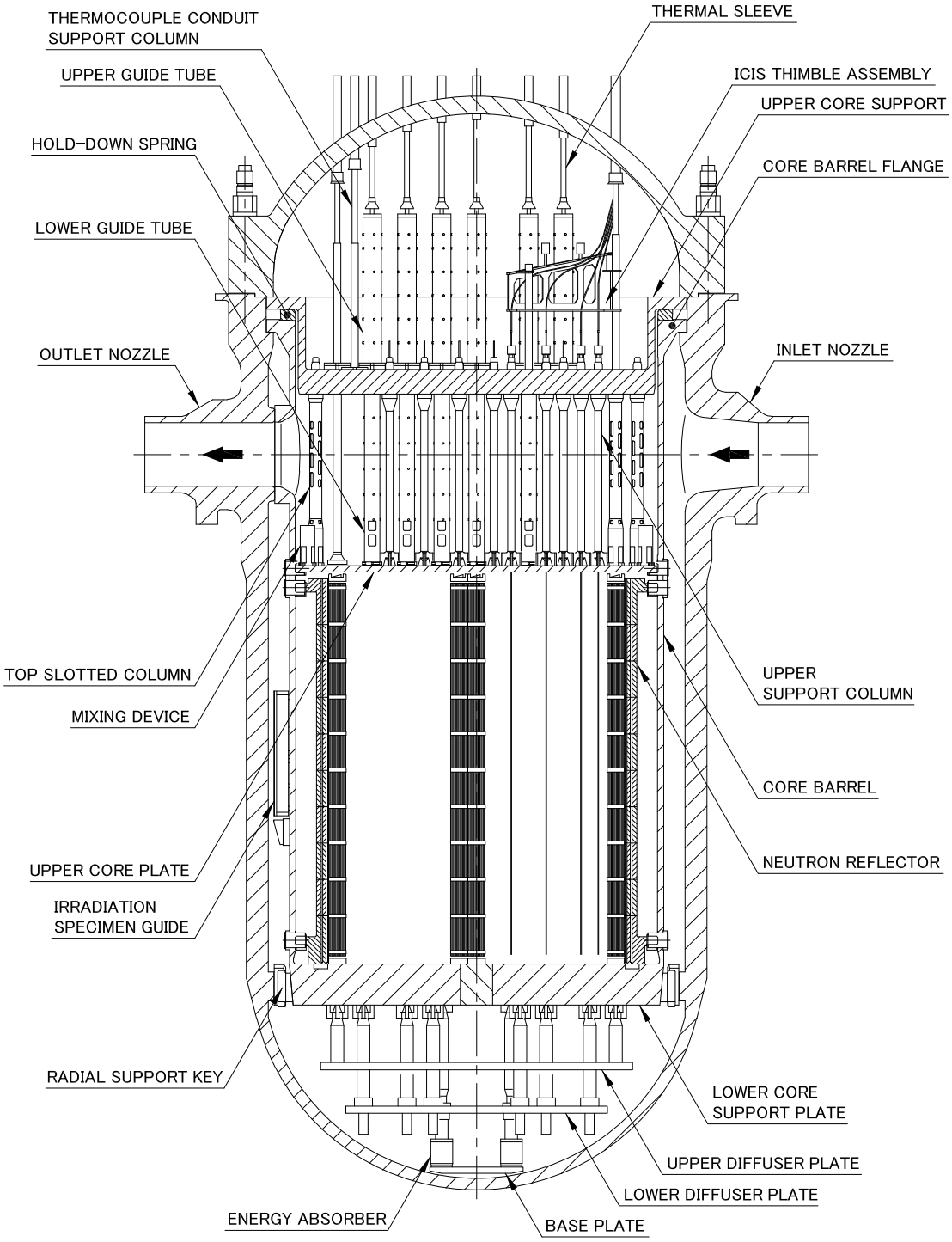

Figure 3.9-4 Reactor Internals General Arrangement

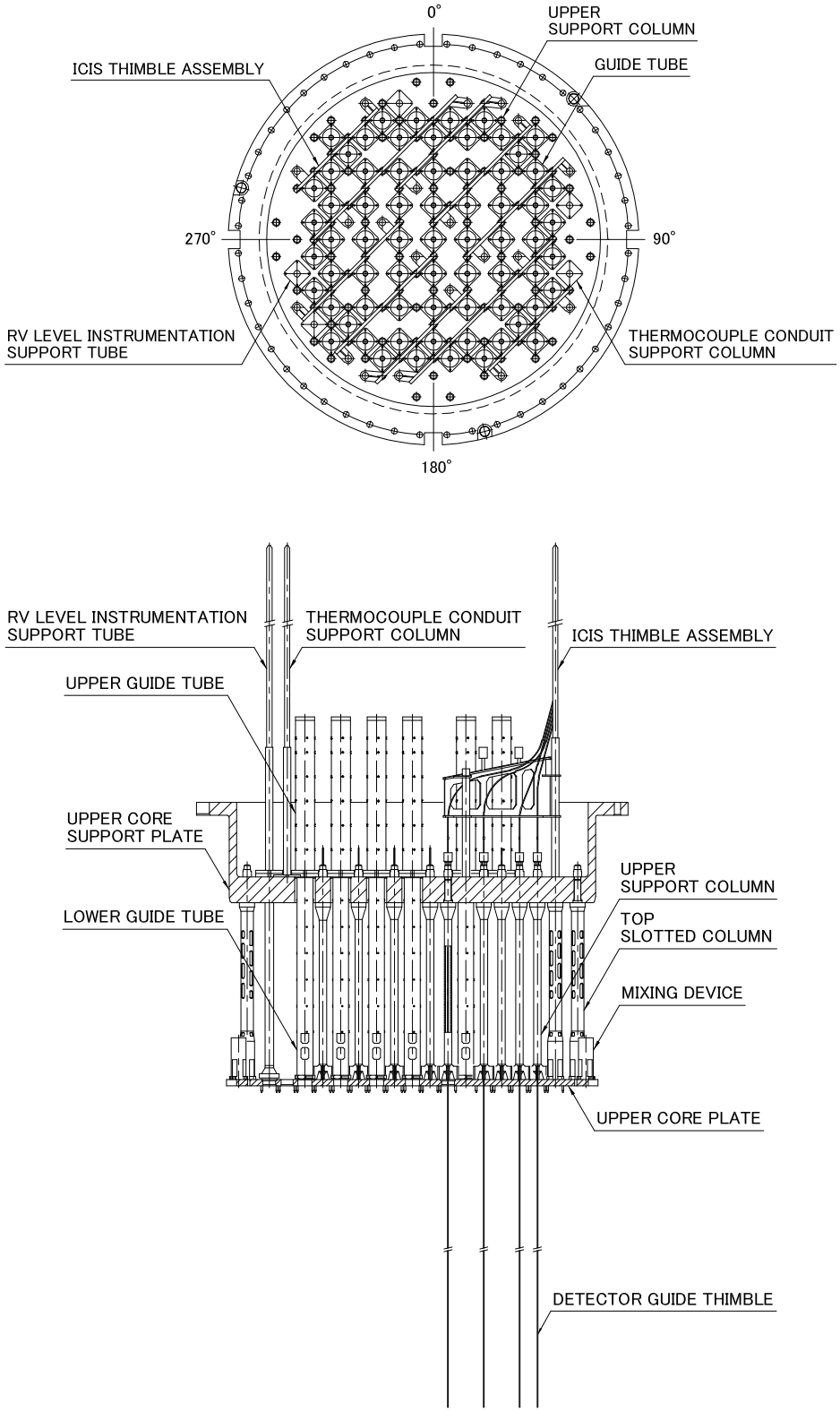

Figure 3.9-5 Upper Reactor Internals Assembly

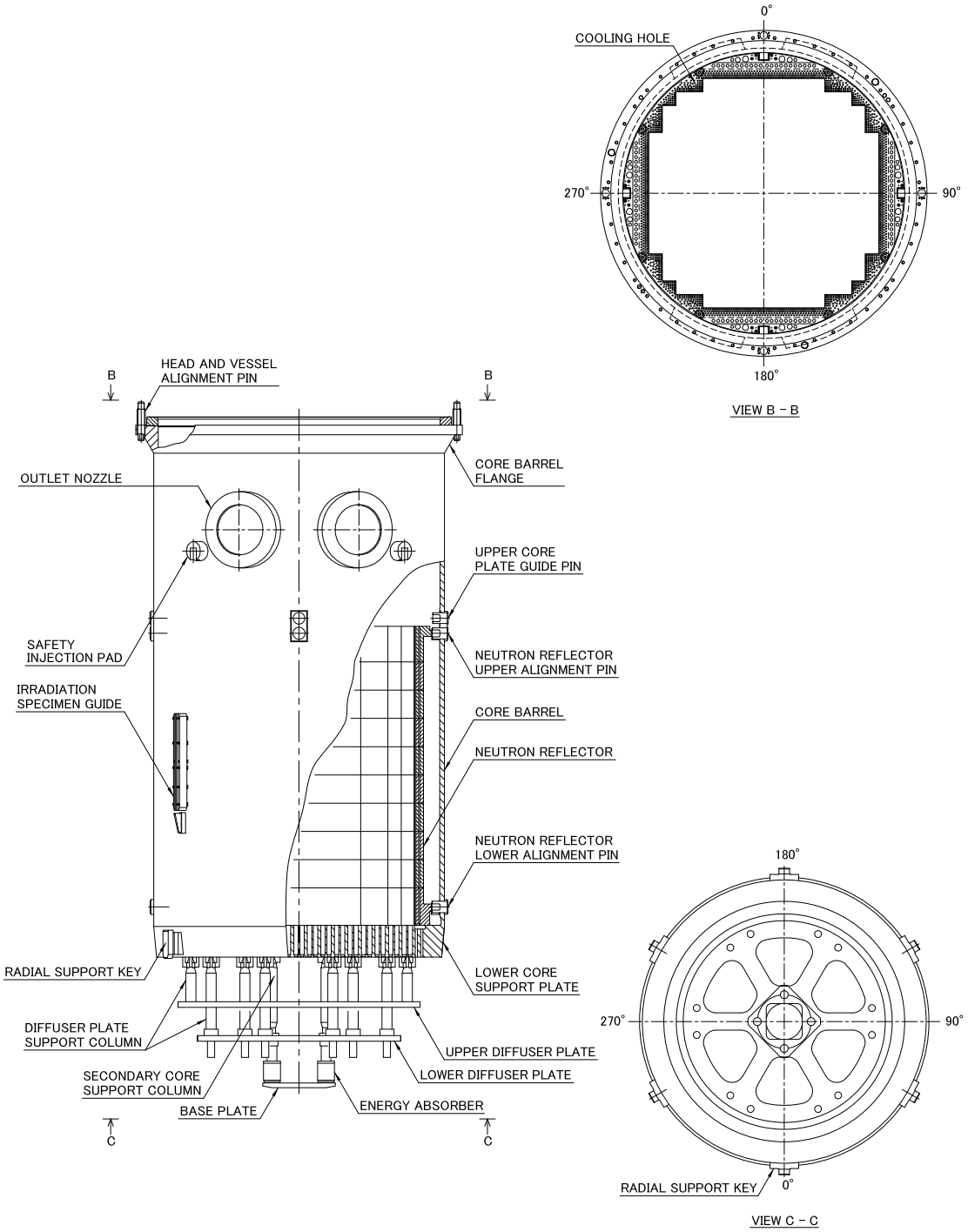

Figure 3.9-6 Lower Reactor Internals Assembly

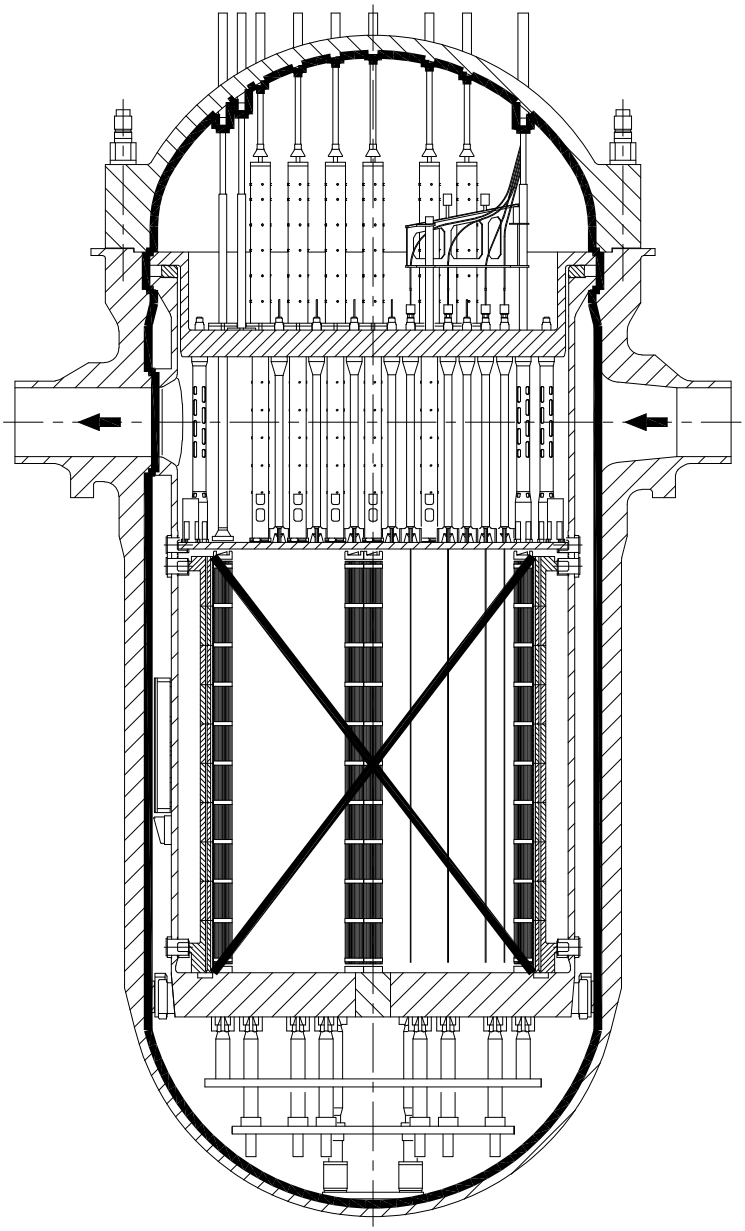

Figure 3.9-7 Jurisdictional Boundary between Reactor Internals and RV

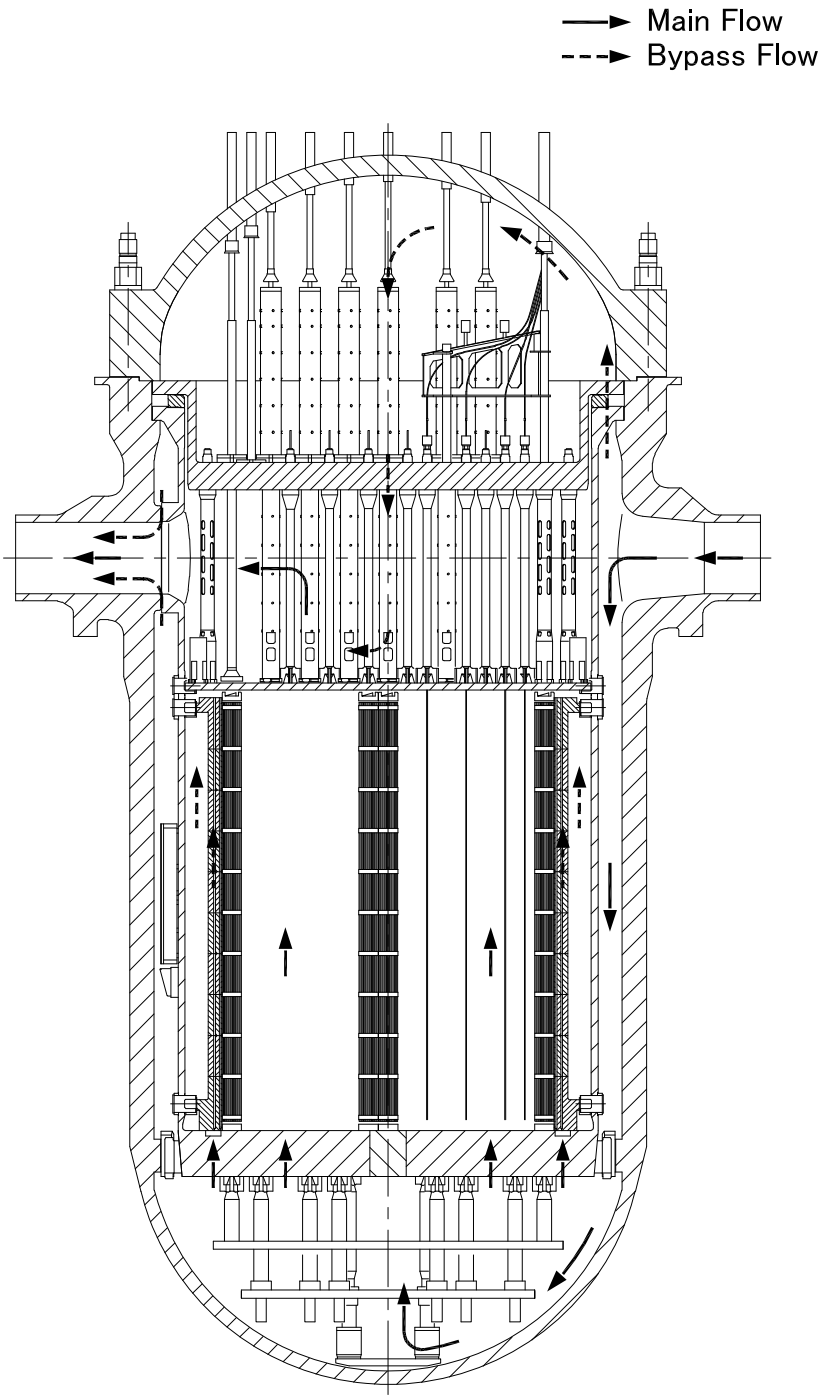

Figure 3.9-8 Reactor Internals RCS Flow and Bypass Flow Paths

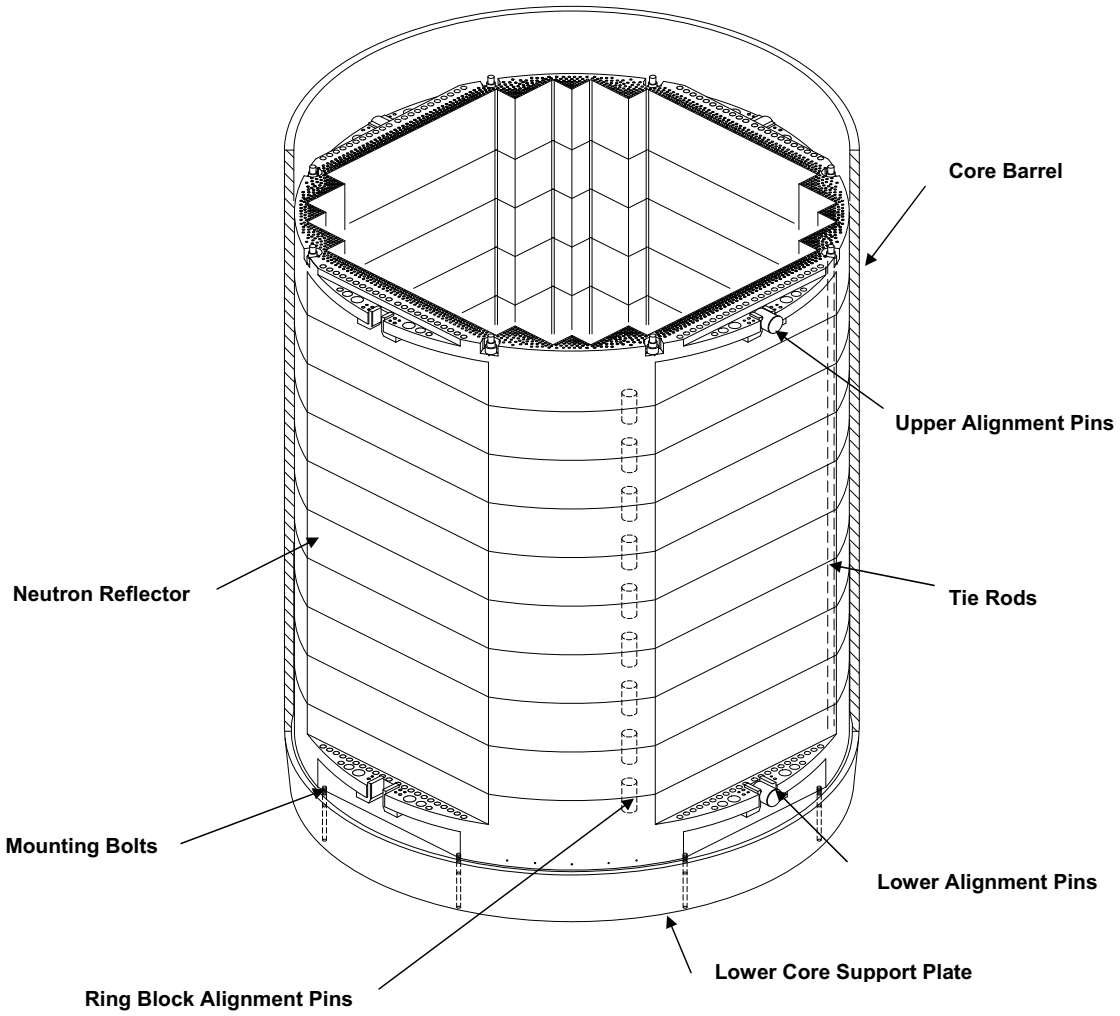

Figure 3.9-9 Neutron Reflectors

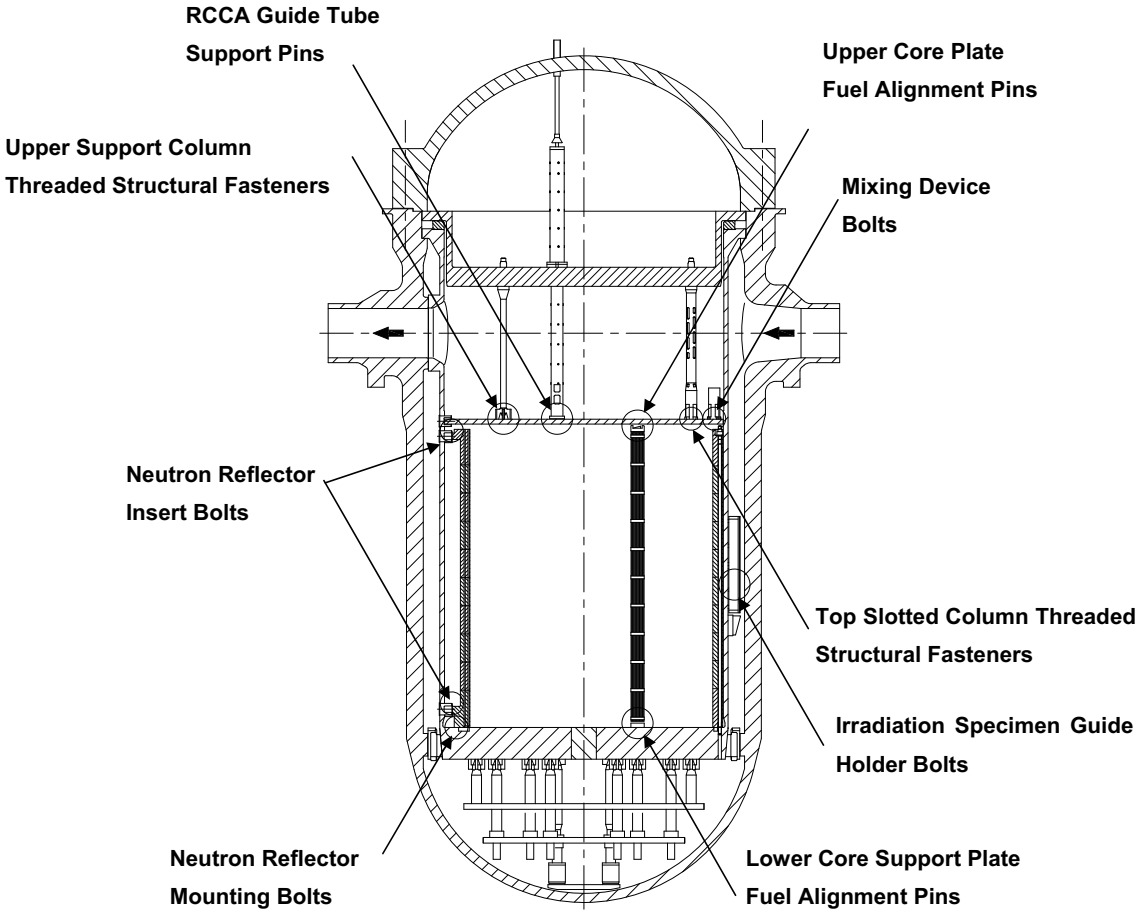

Figure 3.9-10 Fasteners around the Core

3.10 Seismic and Dynamic Qualification of Mechanical and Electrical Equipment

The US-APWR safety-related mechanical and electrical equipment (including instrumentation, but excluding piping), and, where applicable, their supports classified as seismic category I (see Subsection 3.2.1), are demonstrated to be capable of performing their designated safety-related functions under the full range of normal and accident loadings (including seismic). The equipment subject to this demonstration includes the following:

- Equipment associated with systems that are essential to emergency reactor shutdown, containment isolation, reactor core cooling, and containment reactor heat removal.
- Equipment essential to preventing significant release of radioactive material to the environment.
- Instrumentation (including accident and post-accident monitoring) needed to assess plant and environs conditions during and after an accident as described in, “Criteria for Accident Monitoring Instrumentation for Nuclear Power Plants”, RG 1.97, Rev.4 (Reference 3.10-1).

The following equipment is also subject to the above demonstration:

- Equipment that performs the above functions automatically.
- Equipment that operators use to perform the above functions manually.
- Equipment that whose failure can prevent satisfactory accomplishment of one or more of the above safety-related functions.

This includes equipment in the RPS, ESF, Class 1E electrical equipment, the emergency power system, and auxiliary safety-related systems and supports. Examples of mechanical equipment include pumps, valves, fans, valve operators, and snubbers. Examples of electrical equipment are battery and battery racks, instruments and instrument racks, control consoles, electric cabinets, electric panels, valve operator motors, solenoid valves, relays, pressure switches, level transmitters, electrical penetrations, and pump and fan motors.

The information presented or referenced in this section includes the following in accordance with the guidance provided in SRP 3.10 (Reference 3.10-9):

- Identification of the seismic category I equipment and supports, where applicable.
- Criteria and methods of seismic qualification (test, analysis, or combination of test and analysis) for each type of equipment.
- Definition of the applicable seismic and other relevant dynamic load inputs.
- Safety-related functional requirements for mechanical and electrical equipment.

- Loads and load combinations for seismic category I equipment.
- Documentation to demonstrate the adequacy of the seismic qualification process.

Seismic category I SSCs are identified in Table 3.2-2 and Appendix 3D. The COL Applicant is to develop and maintain an equipment qualification file that contains a list of systems, equipment, and equipment support structures and summary data sheets referred to as an equipment qualification summary data sheet (EQSDS) of the seismic qualification for each piece of safety-related seismic category I equipment (i.e., each mechanical and electrical component of each system), which summarize the component's qualification. The EQSDSs contain the information identified in Subsection 3.10.4, which meets the requirements for records in GDC 1 of 10 CFR 50, Appendix A (Reference 3.10-2), and Appendix B, Criteria XVII of 10 CFR 50 (Reference 3.10-3). The qualification documentation, test reports, and supporting data are available and maintained in the equipment qualification file at a central location for the life of the plant.

3.10.1 Seismic Qualification Criteria

The criteria used for seismic qualification includes:

- Decision criteria for selecting a particular test or method of analysis
- Considerations defining the seismic and other relevant dynamic load input motion
- A process to demonstrate the adequacy of the seismic qualification program

The qualification criteria are discussed in this subsection and in Subsection 3.10.2

The SSE term used in this section is applicable to either the site-independent earthquake or the site-specific earthquake as defined in Subsection 3.7.1. Therefore, the expression "SSE" as used for seismic qualification of SSCs refers to equipment qualified for either the standard plant design or the site-specific design. As defined in Subsection 3.7.1, in accordance with Appendix S to 10 CFR 50, the OBE for the standard plant is set at 1/3 or less of the SSE and therefore eliminates the OBE from the design of SSCs for the standard plant. For design of seismic category I and II SSCs that are not part of the standard plant, the COL Applicant can similarly eliminate the OBE, or optionally set the OBE higher than 1/3 SSE, provided the design of the non-standard plant's SSCs are analyzed for the chosen OBE.

For seismic qualification of safety-related mechanical and electrical equipment, with the elimination of OBE, the evaluation for fatigue effects for a smaller earthquake is performed at an equivalent fraction of the SSE as identified in "Policy, Technical, and Licensing Issues Pertaining to Evolutionary and ALWR Designs", SECY-93-087 (Reference 3.10-4).

3.10.1.1 Qualification Standards

Safety-related seismic category I mechanical and electrical equipment (including instrumentation and controls) and supports are designed to safely withstand the effects of postulated earthquakes combined with appropriate effects of normal and accident

conditions (i.e., seismic category I requirements) without loss of intended safety-related function. The Discussion of GDCs 1, 2, 4, 14, and 30 of Appendix A to 10 CFR 50 (Section 3.1) describes the methods of meeting the general requirements for the seismic and dynamic qualification of seismic category I equipment.

The methods of implementing the requirements of Appendix S to 10 CFR 50 (Reference 3.10-5) as it relates to qualifying equipment to withstand the effects of postulated earthquakes, and the requirements of Appendix B to 10 CFR 50, as it relates to quality assurance criteria, are discussed in Section 3.7 and Chapter 17, respectively.

The seismic qualification and documentation procedures used for safety-related mechanical and electrical equipment and their supports are in accordance with the “IEEE Recommended Practice for Seismic Qualification for Class 1E Equipment for Nuclear Power Generating Stations”, ANSI/IEEE Std 344-2004 (Reference 3.10-8), as endorsed by the NRC, RG 1.100, Revision 3, “Seismic Qualification of Electric and Mechanical Equipment for Nuclear Power Plants” (Reference 3.10-7).

The US-APWR mechanical and electrical equipment seismic qualification meets IEEE Std 344-2004 (Reference 3.10-8) as modified by RG 1.100 (Reference 3.10-7) for qualification by either analysis, testing or by a combination of both testing and analysis.

The qualification of the design of safety-related, seismic category I mechanical equipment to assure the structural integrity of pressure boundary components follows the guidance provided in the ASME Boiler and Pressure Vessel Code, Section III (Reference 3.10-10). The US-APWR implements an operability program for active valves following the guidance in “Qualification of Active Mechanical Equipment Used in Nuclear Power Plants”, ASME QME-1-2007 (Reference 3.10-12) as discussed in Subsections 3.9.3 and 3.9.6.

For procured equipment, the design and acceptance criteria for the equipment seismic qualification are required to be specified in the purchase specifications which are part of the purchase order. The applicable level of quality assurance and documentation is also required to be specified. The vendor is required to submit a seismic qualification plan/ procedure for review and approval prior to performing the test and/or analysis, as required. Submittal of existing documentation is acceptable if documentation is provided correlating the existing data with the requirements in the purchase order. The vendor is to submit the final qualification documentation, in the form of an equipment seismic qualification report (ESQR), for review and approval prior to acceptance of the equipment. The ESQR is to contain the information identified in Subsection 3.10.4, as required, to confirm that the qualification of the equipment meets the purchase specifications.

3.10.1.2 Performance Requirements for Seismic Qualification

The performance requirements for every item of instrumentation and electrical equipment classified as seismic category I as identified in Appendix 3D and Section 3.11 are provided in the corresponding EQSDSs. An EQSDS is developed for every item of instrumentation and electrical equipment classified as seismic category I. Section 3.11 and Appendix 3D provides the environmental conditions of the electrical equipment, including the environmental conditions associated with normal operations, maintenance,

testing, and postulated accidents, to be demonstrated before, during and after a seismic event. The equipment qualification file and EQSDS identify the test response spectrum (TRS) and the Required Response Spectra (RRS) for the seismic qualification. The TRS is required to envelope the RRS for qualification of equipment.

The performance requirements for seismic category I active mechanical components are defined in the corresponding equipment specifications along with the system functional requirements as described in Section 3.2, Section 3.9, and in the sections describing the various systems. Subsection 3.10.2.2 and Section 3.9 discuss additional requirements for active pumps, valves, and dampers and these requirements are included in the EQSDSs contained in the equipment qualification file. For other seismic category I mechanical components, the performance requirements are to maintain structural integrity under seismic and other concurrent applicable loading conditions. The demonstration of meeting the performance requirements is included in the EQSDSs for each mechanical component.

3.10.1.3 Performance Criteria

The qualification of safety-related components to safely withstand seismic loadings in combination with other concurrent dynamic loading effects demonstrates that safety-related seismic category I instrumentation and electrical equipment, and mechanical equipment, including active pumps, valves and dampers, are capable of performing their designated safety-related function(s) under the postulated SSE, as defined in Subsection 3.7.1, in combination with other concurrent loadings. Deformation of supports and structures is acceptable at the SSE levels, provided that their designated safety-related functional performance is not compromised and does not compromise the safety-related function of other equipment.

3.10.2 Methods and Procedures for Qualifying Mechanical and Electrical Equipment and Instrumentation

The recommended guidance and requirements in IEEE Std 344-2004 (Reference 3.10-8) and RG 1.100 (Reference 3.10-7) are used for the development and implementation of methods and procedures for seismic qualification of mechanical and electrical equipment. The methods and guidance in “Qualification of Active Mechanical Equipment Used in Nuclear Power Plants”, ASME QME-1-2007 (Reference 3.10-12), including Appendix QR-A, with exceptions provided in RG 1.100 (Reference 3.10-7), are used for seismic qualification of active mechanical equipment.

The US-APWR seismic category I active mechanical and electrical equipment are seismically qualified in accordance with IEEE standards to safely withstand the SSE effects in combination with other applicable dynamic and static loads.

The design limits, load combinations associated with normal operations, postulated accident, and specified seismic and other transient events, and methods for combining dynamic responses for mechanical equipment are described in Subsection 3.9.3. The dynamic loads considered in testing of instrumentation and electrical equipment, are seismic loads, hydrodynamic, and vibratory loads, as applicable, as discussed in Section 3.11.

Recent seismic research, including recently published attenuation relations, indicates that earthquakes in the central and eastern United States have more energy content in the high-frequency range than earthquakes in the western United States. Therefore, the COL Applicant is to investigate if site-specific in-structure response spectra generated for the COL application may exceed the standard US-APWR design's in-structure response spectra in the high-frequency range. Accordingly, the COL Applicant is to consider the functional performance of vibration-sensitive components, such as relays and other instrument and control devices whose output could be affected by high frequency excitation.

The potential failure modes of the high frequency-sensitive component types and assemblies are considered in order to demonstrate the suitability of the equipment for high-frequency seismic environments. The generic failure modes involving inadvertent change of state, contact chatter, signal change/drift, and connection problems due to high frequency effects are the main focus of the high frequency qualification testing. High frequency failures resulting from improper design of mounting, inadequate design connections and fasteners, mechanical misalignment/binding of parts and the rare case of failure of a component part, will result from the same structural failure modes as those experienced during low frequency content spectra qualification testing in accordance with IEEE Std 344-2004 (Reference 3.10-8). Because the safety-related equipment will experience higher stresses and deformations when subjected to the low frequency excitation, these failure modes are more likely to occur under the low frequency testing. Failure modes related to improper mounting, inadequate securing of connections, poor quality joints (cyclic strain effects), etc., are precluded by quality assurance inspection and process/design controls.

Potentially high frequency sensitive components include: electro-mechanical relays; electro-mechanical contactors; circuit breakers; auxiliary contacts; control switches; transfer switches; process switches and sensors; potentiometers; and digital/solid-state devices (mounting and connections only).

Acceptable methods for resolving high frequency concerns not already addressed by certified design qualification where site-specific ISRS generated for the COL application results in high frequency exceedances of the standard design ISRS include: review existing equipment qualification test data for adequate high frequency input motion; review circuits containing potentially sensitive items for inappropriate system actions due to intermediacy or set point drifts; or screening test to confirm equipment does not have high frequency vulnerabilities.

If existing test data are not available and a system and control logic review indicates that inadvertent change of state or intermediacy must be considered, then one of the following high frequency screening tests with 0.2 g peak acceleration are used to demonstrate lack of sensitivity to high frequency vibrations above 20 Hz where the function is monitored during the screening test followed by post test functional testing: sine sweep (fast linear rate, traditional log rate); sine beat at 1/6 octave spacing; band-limited white noise; or, random multifrequency time history. Structural resonances are normally detected by observing amplifications of the input motion in the test item. Phase relationships between the sinusoidal input signal and the structural response at the point of measurement will also help in defining resonances. Therefore, for each screening test, transfer function and

phase data shall be generated by performing Fast Fourier Transform analysis of excitation and response time histories. These results are used to judge whether equipment or devices are sensitive to the high-frequency excitation.

The above testing is not a qualification test but is intended to determine if equipment is potentially sensitive to high-frequency excitation. If the screening tests determine that equipment is potentially sensitive to high-frequency excitation ("screened-in"), then full-scale qualification testing including testing over the range of high-frequency exceedances is required to assure that unacceptable components are not present in the set of qualified certified design equipment and functional systems. In addition, the start of the ZPA range at 50 Hz is adjusted upward if the site-specific RRS show frequency exceedance beyond 50 Hz. In performing the equipment seismic qualification via testing, the TRS envelopes the RRS in all frequency ranges.

In conjunction with the above, for the purpose of qualification of equipment by analysis, the rigid range is defined as having a natural frequency greater than 50 Hz. For the purpose of testing equipment that is not sensitive to response levels caused by high frequency ground motions, rigid is defined as equipment with a natural frequency greater than 33 Hz. If the equipment, to be tested, is sensitive to response caused by high frequency ground motions, then rigid is defined as equipment having a natural frequency greater than 50 Hz.

The US-APWR utilizes the following methods for seismic qualification of equipment based on the type, size, shape, and complexity of the equipment configuration, whether the safety function can be assessed in terms of operability or structural integrity alone, and the reliability of the conclusions:

- Predict the equipment's performance by analysis
- Test the equipment under simulated seismic conditions
- Qualify the equipment by a combination of test and analysis

The US-APWR provides seismic qualification of equipment utilizing the seismic qualification standards and methods as identified in Section 3.10 to the maximum extent possible. When this is not possible or feasible (potential manufacturers / vendors are no longer available, potential manufacturers / vendors cannot provide an acceptable QA program meeting the requirements of 10 CFR 50 Appendix B, etc), a commercial-grade dedication process is used for seismic qualification.

The US-APWR seismic category I equipment is qualified to show that it can perform its safety-related function during and after a postulated earthquake. The seismic qualification considers interfaces and the effects of the amplification within the equipment due to the interfaces and supporting structure. The function of the equipment is dependent on the equipment itself and the system in which it is to function. The safety-related function is determined as that required both during and after a postulated earthquake, which could be different. For example, an electrical device may be required to have no spurious operations during the postulated earthquake or to perform an active function both during, and after, the postulated earthquake, or it may be required to survive during the

postulated earthquake and perform an active function after the postulated earthquake, or any combination of these. Another device may only be required to maintain structural integrity during and after the postulated earthquake.

The functionality of mechanical and electrical equipment during and after a postulated earthquake of magnitude up to and including the SSE for static and dynamic loads from normal, Anticipated Operational Occurrence and accident load conditions is assured by tests and/or analyses. The horizontal and vertical SSE RRS curves developed at the damping of interest, as discussed in Subsections 3.7.1 and 3.7.3, form the basis for the seismic qualification of the equipment. The equipment is demonstrated to withstand the equivalent effect of five OBE excitations followed by one SSE for qualification without loss of structural integrity and functionality, as required.

With the elimination of the OBE from design considerations, two alternatives exist that essentially maintain the requirements provided in IEEE Std 344-2004 (Reference 3.10-8) to qualify equipment with the equivalent of five OBE events followed by one SSE event (with ten maximum stress cycles per event). Of these alternatives, the equipment is qualified with five 1/2 SSE events followed by one full SSE event (with ten maximum stress cycles per event).

In terms of maximum stress cycles for fatigue analysis, in accordance with SECY-93-087 (Reference 3.10-4), this is equivalent to any of the following:

- 20 cycles of SSE,
- 50 cycles of 1/2 SSE and 10 cycles of SSE,
- 150 cycles of 1/3 SSE and 10 cycles of SSE.

Alternatively, a number of fractional peak cycles equivalent to the maximum peak cycles for five 1/2 SSE events when followed by one full SSE may be used in accordance with Figure D.1 of IEEE Std 344-2004 (Reference 3.10-8).

Selection of damping values for equipment to be qualified is made in accordance with “Damping Values for Seismic Design of Nuclear Power Plants”, RG 1.61, Rev. 1 (Reference 3.10-13) and IEEE Std 344-2004 (Reference 3.10-8). Higher damping values may be used if justified by documented test data with proper identification of the source and mechanism.

Qualification of seismic category I mechanical and electrical equipment by testing is the preferred method for complex equipment which must perform an active function during the SSE. The analysis method alone is not recommended for complex equipment that cannot be modeled to correctly predict its response and functionality. Analysis without testing is acceptable only if structural integrity alone can assure the design-intended function. When complete testing is impractical, then the qualification is performed by a combination of test and analysis.

Equipment previously qualified by means of tests and analyses equivalent to those described herein can be used if proper documentation is provided.

Testing

The seismic qualification testing inputs and methods for qualification of mechanical and electrical equipment are performed in accordance with the guidelines provided in IEEE Std 344-2004, Section 8 (Reference 3.10-8). Equipment is tested in its operational condition and functionality is verified during and after testing. Loadings for the normal operation of the equipment, such as thermal and flow-induced loads, are simulated and concurrently superimposed upon the seismic and other dynamic loading to the extent practicable. For seismic and dynamic loads, the actual test input is characterized in the same manner as the required input motion to the equipment and the conservatism in amplitude is demonstrated. The TRS envelopes the RRS except for equipment not sensitive to high frequency motion with exceedances above 20 Hz.

Seismic testing is performed by subjecting equipment to vibratory motion that conservatively simulates that postulated at the equipment mounting location. Factors considered involve the location of the equipment, the nature of the equipment, the nature of the postulated earthquakes, and whether the equipment is to be used in one application or many (proof testing or generic testing). Equipment is conservatively tested considering the multidirectional effects of the postulated earthquakes.

The types of test to be used are single frequency and multifrequency. The seismic and dynamic test inputs are provided by the in-structure floor response spectra identified with the building elevation derived from the SSE and developed by the time-history modal analysis method or direct integration method for various damping values as described in Subsection 3.7.3.

Multi-frequency testing provides a broadband test motion that is appropriate for producing a simultaneous response from modes of a multi-degree-of-freedom system whose malfunction may be caused by modal interaction. Multi-frequency testing is the preferred method since the seismic and dynamic load excitation generally has broad frequency content.

Single-frequency testing, such as sine beats, is used when the seismic ground motion is filtered due to one predominant structural mode; when the resulting floor motion may consist of one predominant frequency; when it can be demonstrated that the anticipated response of the equipment is adequately represented by one mode; or, when the input has sufficient intensity and duration to excite the relevant modes to the required magnitude, such that the TRS envelopes the corresponding spectra.

For the seismic and dynamic portion of the loads, the test input motions are applied to one vertical axis and one principal horizontal axis (or two orthogonal horizontal axes) simultaneously, unless it is demonstrated that the equipment response is not sensitive to the vibratory motion in the horizontal direction, and vice versa. The time phasing of the inputs in the vertical and horizontal directions must be such that a purely rectilinear resultant input is avoided. An alternate method is to test with the vertical and horizontal inputs in-phase, and then repeat the test with inputs 180 degrees out-of-phase. This type of testing must be repeated with the equipment rotated 90 degrees horizontally.

Components that have been previously tested to IEEE Std 344-1971 prior to submittal of the DCD are reevaluated to justify the appropriateness of the input motion and requalify

the equipment, if necessary. The COL Applicant is to requalify the component using biaxial test input motion unless the applicant provides justification for using a single-axis test input motion. Guidelines for qualifying components are included in the procedures of the US-APWR Equipment Qualification Program (Reference 3.11-3).

The equipment to be tested is mounted in a manner that simulates the intended service mounting, and the fixture design is such that it does not cause any extraneous dynamic coupling to the test component.

The dynamic coupling effect of electrical connections, conduit, sensing lines, and any other interfaces are considered and included in the test unless otherwise justified. The method chosen for testing depends upon the nature of the expected vibration environment and also on the nature of the equipment.

Seismic testing is performed in the proper sequence as indicated in “IEEE Standard for Qualifying Class 1E Equipment for Nuclear Power Generating Stations”, IEEE Std 323-1974 (Reference 3.10-15) and the testing identifies and accounts for significant aging mechanisms (see Section 3.11). The equipment is demonstrated to be capable of performing its safety-related function throughout its qualified life including its functional operability during and after a SSE at the end of that qualified life.

Analysis

The seismic analysis methods used are performed in accordance with the guidelines in IEEE Std 344-2004, Section 7 (Reference 3.10-8). Two approaches can be used to seismically qualify equipment by analysis for a number of fatigue inducing smaller earthquake events followed by an SSE using the methods in accordance with IEEE Std 344-2004, Section 7 (Reference 3.10-8). Qualification by analyses without testing is acceptable if the structural integrity alone can assure the intended design function for the equipment. The two approaches are dynamic analysis and static coefficient analysis. The method utilized is one that takes into account the complexity of the equipment and adequacy of analytical techniques to properly predict the equipment’s safety-related functions while under seismic excitation and most accurately represents the equipment’s performance under seismic conditions. The method to use is that which most accurately represents the equipment’s performance under seismic conditions and is also based on the perceived margin of strength of the equipment.

For dynamic analysis, the equipment and any secondary structural supports are modeled to adequately represent their mass distribution and stiffness characteristics and a modal analysis is performed to determine whether the equipment is rigid or flexible. Rigid equipment can be analyzed using static analysis and the seismic acceleration associated with the mounting location. Flexible equipment can be analyzed using its dynamic response computed from a response spectrum, time-history, or other analysis methods.

When the static coefficient analysis is used, the determination of natural frequencies is not required and the acceleration response of the equipment is assumed to be the maximum peak of the in-structure RRS at 5% damping. Subsection 3.7.3 provides additional discussion on the use of the equivalent static load method of analysis. A static coefficient of 1.5 is used to take into account the effects of multi-frequency excitation and multi-mode response. The increased acceleration values are used as equivalent static

load factors applied to the entire mass of the equipment being evaluated. The static coefficient analysis method is used only for the evaluation of structural integrity of equipment. The static analysis method alone is not sufficient for the qualification of safety-related active equipment where the demonstration of operability is required.

When one of the analysis methods described above is used, it is performed with a number of smaller earthquake events that contain a fatigue-inducing potential that is similar to the postulated earthquake response motion at the mounting of the equipment. The number of smaller earthquake events and their fatigue-inducing potential is important only for low-cycle fatigue-sensitive equipment. The analysis will determine that the structural integrity of the equipment is maintained in combination with other applicable loads during the smaller earthquake event. The analysis must show that the smaller fatigue inducing earthquake events followed by an SSE do not result in failure of the equipment to perform its safety-related function. The resulting maximum stresses under applicable loading conditions must be shown to be less than the allowable.

When analyses are used for qualification, the combination of multi-modal and multi-directional responses are made in accordance with “Combining Modal Responses and Spatial Components in Seismic Response Analysis”, RG 1.92, Revision 2 (Reference 3.10-16).

Combined Testing and Analysis

The methods used for combined testing and analysis are performed in accordance with the guidelines in IEEE Std 344-2004, Section 9 (Reference 3.10-8). Combined testing and analysis is utilized when the equipment cannot be practically qualified by analysis or testing alone. Factors used in determining the use of this method include size of the equipment, its complexity, or the large number of similar configurations. Large equipment, such as motors, generators, and multi-bay equipment racks and consoles may be impractical to test at full levels due to limitations in vibration test equipment. Modal testing and analysis can serve as an aid to qualification of large and complex systems. Modal testing is used as the method to determine resonant frequencies, mode shapes, and as a lower bound for modal damping. A modal test may be performed to correlate the frequencies and mode shapes, determined during the analysis, with the measured response of complex system. Extrapolation for similar equipment can be utilized for equipment that was previously qualified and differs only in size or in specific qualified devices located in the assembly or structure.

Interaction of Category II with Seismic Category I Equipment

Seismic category II equipment, as defined in Subsection 3.2.1, is designed and analyzed for the SSE event, using the same methods as specified for seismic category I equipment, to demonstrate structural integrity so as not to collapse on, or adversely interfere with seismic category I equipment. Seismic category I equipment is protected from non-seismic equipment by isolation or the use of barriers when possible. If isolation is not possible, then the equipment is designed and analyzed as seismic category II to maintain structural integrity to withstand an SSE event.

3.10.2.1 Seismic Qualification of Instrumentation and Electrical Equipment

Seismic qualification of seismic category I instrumentation and electrical equipment is demonstrated by either type testing or a combination of test and analysis. The selection of qualification method employed by US-APWR for a particular item of equipment is based upon many factors including: practicability, complexity of equipment, economics, and availability of previous seismic qualification data/reports. The qualification method employed for a particular item of instrumentation or electrical equipment is identified in the individual EQSDS.

Instrumentation described in RG 1.97 (Reference 3.10-1), including associated mountings, are tested under appropriate seismic and dynamic loadings as described in the RG to assure that the instruments continue to monitor plant variables and systems after a seismic event and/or DBA.

The seismic qualification criteria, procedure and test result of Class 1E GTG system are described in a Technical Report titled, "Initial Type Test Result of Class 1E Gas Turbine Generator System" (Reference 3.10-20).

3.10.2.1.1 Type Testing

Type testing can be utilized on a sample of equipment representing a generic group that are similar in materials, design and manufacturing. The sample components are in compliance with the manufacturer's quality control system and specifications for production units. The tested equipment is subjected to environmental and operating cycles that simulate the intended service conditions and safety-related functions for which they are to be qualified.

Multi-frequency testing or single-frequency testing is used for seismic category I instrumentation and electrical equipment in accordance with the guidelines in IEEE Std 344-2004 (Reference 3.10-8).

Multi-frequency testing is normally used for hard mounted equipment (floor and wall mounted) where a RRS at the equipment mounting location is identified. The test results are provided in the equipment qualification file (and the EQSDS for the individual equipment) and the TRS is shown to envelope the RRS over the entire frequency range of interest, except for equipment not sensitive to high frequency motion with exceedances above 20 Hz.

Single-frequency testing can be used for line-mounted equipment and other equipment as recommended by IEEE Std 344-2004 (Reference 3.10-8) and RG 1.100 (Reference 3.10-7). Required input motion (RIM) in seismic evaluations is normally associated with components in distributions systems (piping and duct) lines where the single mode seismic input to the component is dominated by the seismic response of the distribution system (line) and qualification is performed by generic application to a wide range of line frequencies. For the US-APWR, piping and duct systems are generically designed to limit the peak acceleration experienced by the equipment mounted on them to a value less than the specified RIM acceleration, which is 6.0g horizontal and 6.0g vertical in accordance with "IEEE Standard for Qualification of Actuators for Power-Operated Valve Assemblies with Safety-Related Functions for Nuclear Power Plants",

IEEE Std 382-1996 (Reference 3.10-17). For line-mounted equipment that is not qualified to the generic level of 6.0g, the seismic input motion is determined from the response of the system analysis in which it is located. The method for qualification of line-mounted equipment is performed in accordance with the guidance in IEEE Std 344-2004, Section 8.6.7 (Reference 3.10-8) and IEEE Std 382-1996 (Reference 3.10-17), with justification and test results provided in the equipment qualification file.

3.10.2.1.2 Test and Analysis

The US-APWR utilizes a combination of test and analysis to qualify seismic category I instrumentation and electrical equipment. The test methods utilized are similar to those described above for type testing along with static and/or dynamic analysis. These methods can be used to establish input response requirements at sub-component locations. This approach can be used to justify the extrapolation of tests on a single electrical cabinet, or a small number of connected cabinets, to qualify an assembly. Analysis can be used to: explain unexpected behavior during a test; obtain a better understanding of the dynamic behavior of the equipment so that the proper test can be defined; or obtain a measure of expected response before a test. The documentation is included in the equipment qualification file and the EQSDSs.

3.10.2.2 Seismic and Operability Qualification of Active Mechanical Equipment

The methods and procedures used for qualifying active mechanical equipment (i.e., valves, pumps, and dampers) are described in Section 3.9, Subsection 3.10.2, and this subsection. Analysis, test, or a combination of test and analysis are used for qualification of seismic category I active mechanical equipment to show it maintains structural integrity (including pressure retention), and operability. The methods used assure equipment functionality and operability for its intended safety-related function under required plant conditions.

Seismic category I active mechanical equipment is designed to withstand seismic and dynamic loads, including the intended service load conditions identified in the equipment's design specification, in accordance with the requirements in ASME Code, Section III (Reference 3.10-10) described in Section 3.9. An example of such service loads include: normal, upset, emergency, faulted, testing, and other conditions. Other loads include, as applicable, internal pressure, operator thrust, dynamic transients, flow induced vibration, degraded flow conditions, reciprocating and rotating equipment vibrations, and nozzle loads. Load combinations are described in Section 3.9 and documented in the equipment qualification file and EQSDS.

GDC 14 requires, in part, that the RCPB is designed, fabricated, erected, and tested so as to have an extremely low probability of abnormal leakage and GDC 30, in part, requires that components which are part of the RCPB are designed, fabricated, erected, and tested to the highest quality standards practical. The qualification program for these components, including valves, which are part of the RCPB, includes testing or testing and analyses. This demonstrates that these components do not experience leakage, or increase in leakage above the specified limits in the equipment specification, as a result of any loading or combination of loadings for which the valves must be qualified (See Subsections 3.9.3 and 3.9.6). The seismic qualification documentation for valves is included in the equipment qualification file and the EQSDSs.

Section 3.9 includes dynamic testing and analysis of mechanical systems, components and equipment, seismic analysis, and qualification of safety-related mechanical equipment, load combinations, and inservice testing programs.

If the dynamic testing of a pump or valve assembly proves to be impractical, static testing of the assembly is acceptable provided that the end loadings are conservatively applied and are equal to or greater than the postulated event loads, dynamic amplification effects are accounted for, the component is in the operating mode during and after the application of loads, and an adequate analysis is made to show the validity of the static application of loads.

Valves

Seismic category I active valves listed in Table 3.9-14 are constructed in accordance with the ASME Code, Section III (Reference 3.10-10) and qualified by tests and analysis to verify that their structural and functional requirements are met and operate (perform their mechanical motion) during and after a seismic event.

Seismic category I active valves are analyzed using guidance and stress limits of ASME Code, Section III (Reference 3.10-10) and Subsection 3.9.3. The method for qualification of active valve assemblies that can provide an acceptable level of assurance of functional operability provided in ASME QME-1-2007 (Reference 3.10-12) is also used as guidance. This method of qualification is based on tests and analysis demonstrating the ability of the valve assembly to perform its function under extreme adverse conditions of pressure, mechanical loading, flow dynamics, temperature and vibration.

An analysis of the extended structure is performed for static equivalent seismic loads applied at the center of gravity of the extended structure (i.e., valve bonnet, yoke, actuator, and accessories mounted on the actuator assembly, etc.). The maximum calculated stress produced in the valve body, which includes applicable loading conditions, confirms structural integrity and is within the limits acceptable by ASME Code, Section III (Reference 3.10-10) for active Class 1, 2, and 3 valves. Valves with no extended portions will meet the minimum wall thickness requirements for the pressure retaining parts based on the pressure and temperature rating in ASME Code, Section III (Reference 3.10-10). The seismic loading effects of the extended structure uses the appropriate acceleration values as determined from the applicable RRS, when the equipment is mounted directly to a building floor. If this is not the case, as for in-line mounted valves, the seismic loading is 6.0 g in both the horizontal and vertical direction for the SSE condition. The excitation in each of the two major horizontal directions are considered to act separately, but each simultaneously with the vertical direction.

In addition to the initial qualification of safety-related valves, other tests are performed to verify their functionality and operability. Prior to installation in the plant, seismic category I active valves (except for check valves) are subjected to the following: (1) tests of the valve pressure boundary are hydrostatically tested in accordance with ASME Code, Section III (Reference 3.10-10); (2) tests of the valve seat leakage; (3) hydrostatic tests of the disc; and, (4) operational tests verifying that the valve will open and close. After installation, active valves are subjected to hydrostatic tests, construction acceptance tests, and preoperational tests and where applicable, periodic inservice inspections and operations performed in situ verifying and assuring the functionality of the valve. These

tests assure the reliability of the valve for the design life of the plant. The valves included in the required ASME Code, Section XI (Reference 3.10-18), IST are identified in Subsection 3.9.6 (Table 3.9-14). For those valves that are not included, the demonstration that the valves are capable of performing their safety-related function is by inclusion in plant maintenance programs, plant procedures, and/or Technical Specifications.

An analysis of the extended structure on active valves is performed using a 6.0g static equivalent seismic load applied at the center of gravity of the extended structure. The nozzle loads imposed by the attached piping are considered. To assure functionality under combined loadings, the stresses resulting from applied test loads are shown to envelope the specified service limits for ASME Code, Section III (Reference 3.10-10), Class 1, 2, and 3 active valves for the intended function of the component. Stresses in valve bodies are limited to the particular material's elastic limit when the valve is subjected to the combination of normal operating loads, SSE, and other applicable dynamic loads as specified in the equipment's specification and ASME Code, Section III (Reference 3.10-10).

A representative valve of each design type with extended structures is subjected to static load tests, as applicable. The valve assembly is installed in a test fixture with suitable provision for imposing the static test load. The valve assembly is mounted by its normal mounting points and is sufficiently rigid to resist the applied seismic load. The load is applied along the least rigid axis of the valve assembly and as close to the center of gravity as possible. Nozzle loads are simultaneously applied to the valve through its mounting during the test. The valve operating pressure is applied during the test and the valve cycled (opened and closed) while in the deflected position.

If the natural frequency of the valve is rigid, the accelerations used for the static valve qualification are 6.0g in both horizontal directions and vertical. If the natural frequency of the valve is not rigid, the acceleration values applied during the test are adjusted by the amplification of the input acceleration considering the natural frequency of the valve determined by dynamic analysis.

The procedures acceptable to the NRC for implementing the regulations with respect to the detailed specification of information pertinent to defining the operating requirements for valve assemblies whose safety-related function is to open, close, or regulate fluid flow are discussed in ASME QME-1-2007 (Reference 3.10-12). The functional specifications for valves are addressed in Section 3.9.

The equipment specification for safety-related valves includes the valve operating conditions used to evaluate the valve discs, which experience the maximum design line pressure and maximum differential pressure from plant operating, transient, and accident conditions (including pressure and LOCA). Feedwater line valve discs are evaluated for the effect of dynamic loads by considering the effect of dynamic differential pressure. The equivalent differential pressure is developed from a transient analysis that includes system arrangement and valve closing dynamics. The acceptable limits are specified in the ASME Code, Section III (Reference 3.10-10) for Class 1, 2, and 3 valves. An analysis is performed to verify the design adequacy of the disc for the differential pressure and impact energy on the valve disc during a LOCA.

Seismic category I active pressure relief valves are qualified using methods similar to the above requirements for active valves. The end loads applied during testing include the discharge loads. When a relief valve with extended structure is tested to demonstrate operability, a static load equivalent to the seismic load for active valves is applied to the top of the bonnet and the pressure increased until the valve mechanism actuates. The test pressure is applied to the valve inlet to verify that seat leakage is within the limits specified in the equipment specification. The valve is demonstrated to meet the seismic design requirements and functional requirements when successful actuation during testing is demonstrated.

Seismic category I active check valves, due to their simple characteristics, are qualified using standard design or analysis to assure structural integrity and the ability to operate is assured by the design features. In addition to the design considerations, each type of active check valves undergo a stress analysis including applicable SSE loads for critical parts that could affect the operability of the valve, hydrostatic, and seat leakage test. The valve also undergoes in-situ testing and inspection to assure it remains functional.

Pumps

Seismic category I active pumps listed in Table 3.9-7 are constructed in accordance with the ASME Code, Section III (Reference 3.10-10) and are qualified by tests and analysis to verify that their structural and functional requirements are met and the pumps will operate during and after a seismic event. The qualification of the mechanical portions of seismic category I pumps includes the fluid pressure boundary, the suction and discharge nozzles and the shaft and seal retainers and the impeller assembly.

The qualification of seismic category I active pumps is demonstrated by either test, or a combination of test and analysis. The method of qualification is usually determined by the manufacturer and can be as defined above, or existing documented data can be used with adequate justification. The method used must demonstrate that the pump meets the equipment specification provided to the vendor. The natural frequency of the pump shaft and rotor assembly must be determined to ascertain whether they are within the frequency range of the vibratory excitations. If the minimum natural frequency of the assembly is beyond the excitation frequencies, a static deflection analysis of the shaft is acceptable to account for dynamic effects. If the assembly's natural frequencies are close to the excitation frequencies, an acceptable dynamic analysis must be performed to determine the structural response of the assembly to the excitation frequencies.

The qualification documentation provided for the pump assembly must show that the pump will perform its safety-related function when subjected to the maximum acceleration at its mounting location and faulted nozzle loads. The qualification is based on evaluating the entire pump/motor assembly, which includes the coupling system and considers its interface with the mounting structure. The method of qualification addresses the dynamic interactions between the pump, motor, and mounting structure and address the deflection results for determination of any requirements for interaction with other equipment. If qualification is performed by analysis, a frequency search test of the pump assembly must be performed to verify the seismic input used in the analysis. The analysis must determine the speed of the pump shaft as a result of the postulated events and compare it with the design critical speed.

The stresses resulting from the combination of normal operating loads, SSE, and dynamic system loads must be shown to be less than the allowable specified in ASME Code, Section III (Reference 3.10-10) as identified in Subsection 3.9.3. The calculated stresses in the pump casing due to applied maximum nozzle loads must be shown to be less than the allowable specified in ASME Code, Section III (Reference 3.10-10) and identified in Subsection 3.9.3.

The qualification of the impeller, shaft, and bearings must be shown to meet the functionality requirements by showing that the stresses on the shaft do not exceed the minimum yield strength of the material, the deflections of the shaft and/or impeller blades will not cause the impeller assembly to seize, and the bearing loads are below the manufacturer's allowables.

Functionality of active pumps is demonstrated by hydrostatic tests, leakage tests, and performance tests. The fluid pressure boundary of the pump is hydrostatically tested in accordance with the requirements in the ASME Code, Section III (Reference 3.10-10) and the equipment specification described in Subsection 3.9.3. During the hydrostatic test the fluid pressure boundary is examined for leaks at joints, connections, and regions of high stress (openings and/or thickness transition sections). The permitted leakage rates are identified in the equipment specification. The performance tests demonstrate that the pump is capable of meeting the hydraulic requirements in the equipment specification while operating with flow at the total developed head, minimum and maximum head, the positive suction head, and other parameters, as applicable. Compliance with the performance limits is also verified by monitoring bearing temperatures and vibration levels. The bearing temperature limits are provided by the equipment manufacturer.

Active pumps also undergo tests after installation in the plant and prior to startup and are included in the periodic inservice inspection and operation tests described in Subsection 3.9.6 or inclusion in the plant maintenance programs, plant operating procedures and/or Technical Specifications. These tests further demonstrate the capability of the pumps to perform their safety-related function.

Dampers

Safety-related active dampers used on ventilation systems to isolate the HVAC areas, such as the control room habitability system, during the seismic events are listed in Table 3.2-2 and Appendix 3D, and are seismically qualified to operate under faulted conditions on demand.

The above methods assure that the active safety-related valves, pumps, and dampers are qualified for operability during a faulted seismic event and assure that they are to perform their safety-related function as required.

3.10.2.3 Pump Motor and Valve Operator Qualification

The seismic category I active pump motor, active valve motor operators, and appurtances vital to operation of the pump and valve are independently qualified for the specified environment as identified in Appendix 3D and Section 3.11, as well as during an SSE seismic event, in accordance with IEEE Std 344-2004 (Reference 3.10-8). The seismic

qualification is included in the equipment qualification file and EQSDSs for each piece of safety-related equipment.

3.10.2.4 Seismic Qualification of Other Seismic Category I Mechanical Equipment

The seismic qualification of other seismic category I mechanical equipment identified as not active is demonstrated by analysis to maintain structural integrity and pressure retention under applicable loading conditions. The methods utilized are described in Subsections 3.7.3, 3.9.2, and 3.10.2 and conform to the methods described in IEEE Std 344-2004 (Reference 3.10-8) and ASME Code, Section III (Reference 3.10-10).

3.10.3 Methods and Procedures of Analysis or Testing of Supports of Mechanical and Electrical Equipment and Instrumentation

The qualification of safety-related seismic category I electrical and mechanical equipment supports is performed by either tests or analyses to assure their structural capability, including anchorage, to withstand seismic excitation characterized by the RRS at the support mounting location.

Electrical equipment and instrumentation supports (including instrument racks, control consoles, cabinets, and panels) are tested with the equipment installed or an equivalent dummy simulating the equivalent equipment inertial mass effects and dynamic coupling to the support. The input motion for the test is determined by the inservice mounting location of the support. The method for testing supports is the same as that described for equipment in Subsection 3.10.2. If the equipment is installed in a non-operational mode for the support test, the response of the support in the test at the equipment mounting location is monitored and characterized as a RRS to be used for functional qualification of the equipment separately, as described in Subsection 3.10.2. The TRS must be shown to envelope the RRS to qualify the support for structural integrity.

If the electrical equipment supports are qualified by analysis using the methods in Subsection 3.10.2, the input motion must take into account the interface requirements. The analytical results include the RIM to the mounted equipment as obtained and characterized by a RRS, which are used to qualify the equipment separately as described in Subsection 3.10.2. The allowable stress criteria appropriate for the support material is used.

For mechanical equipment supports (including pumps, valves, valve operators and fans), the design and service load combinations and stress limits for ASME Code, Section III (Reference 3.10-10) is given in Subsection 3.9.3 and the supports are qualified by showing that these stress limits are not exceeded. The analysis results and equipment mounting and interface requirements are identified in the EQSDSs for the equipment.

Batteries and battery rack supports are mounted to the building floor and seismically qualified for applicable seismic loads using the ISRS given in Subsection 3.7.2, and qualified using the methods in Subsection 3.10.2.

For procured equipment and supports, the interface requirements are provided to the supplier in the equipment specification which is part of the purchase order. Equipment supports used in the US-APWR are generally designed to be rigid and are qualified by

analysis or tests as described above and in Subsection 3.10.2, and include the interface with the supporting equipment. The structural integrity of the supports is assured by showing that stresses are below the applicable code allowable stresses.

The criterion for instrumentation line supports is addressed in Subsection 3.12.6 using the criteria from ASME Code, Section III (Reference 3.10-10), Subsection NF for Equipment Class 1 and 2 supports.

The methodologies for qualification of HVAC duct supports, conduit supports, and cable tray supports are presented in Appendices 3A, 3F, and 3G, respectively.

3.10.4 Test and Analyses Results and Experience Database

To address the requirements of GDC 1 and 10 CFR 50, Appendix B, Criteria XVII to establish records concerning the qualification of equipment, complete, and auditable records are established and maintained in the equipment qualification file. These files describe the qualification method used for equipment and the tests and analyses results in sufficient detail to document the degree of compliance with the equipment seismic qualification requirements. The equipment qualification file includes a list of systems, equipment, and the equipment support structures identified in Table 3.2-2 and Appendix 3D, and the EQSDSs for each piece of safety-related equipment (i.e., each mechanical and electrical component of each system), which summarizes the component's qualification. These records are maintained for the life of the plant at the plant administrative facilities. These records are to be updated and kept current as equipment is replaced, further tested, or otherwise further qualified. These EQSDSs include the following:

- Identification of equipment, including vendor, model number, and location within each building. Valves that are part of the RCPB are identified.
- Physical description, including dimensions, weight, and field mounting condition, and identification of whether the equipment is pipe-, floor-, or wall-supported.
- Description of the equipment's function within the system.
- Identification of design (functional) specifications and qualification reports and their locations. Functional specifications for active valve assemblies conform to the requirements in accordance with ASME QME-1-2007 (Reference 3.10-12).
- Description of the required loads and their intensities for which the equipment is qualified.
- Qualification by test, identification of the test methods and procedures, important test parameters, and a summary of the test results.
- Qualification by analysis, identification of the analysis methods and assumptions and comparisons between the calculated and allowable stresses and deflections for critical elements.

- Natural frequency (or frequencies) of the equipment.
- Identification of whether the equipment may be affected by vibration fatigue cycle effects, and a description of the methods and criteria used to qualify the equipment for such loading conditions.
- Documentation that the equipment has met the qualification requirements.
- Availability for inspection (i.e., statement of whether the equipment is already installed).
- A compilation of the RRS (or time-history) and corresponding damping for each seismic and dynamic load specified for the equipment together with other loads considered in the qualification and the method of combining loads.

3.10.4.1 Implementation Program and Milestones

The implementation of the equipment seismic qualification program is described in a Technical Report titled, “US-APWR Equipment Qualification Program,” issued as a separate report (Reference 3.11-3). The COL Applicant is to document and implement an equipment qualification program for seismic category I equipment and provide milestones and completion dates.

3.10.4.2 Experience Based Qualification

Experience-based qualification is not used for any equipment.

3.10.5 Combined License Information

COL 3.10(1) The COL Applicant is to document and implement an equipment qualification program for seismic category I equipment and provide milestones and completion dates.

COL 3.10(2) Deleted

COL 3.10(3) The COL Applicant is to develop and maintain an equipment qualification file that contains a list of systems, equipment, and equipment support structures and summary data sheets referred to as an equipment qualification summary data sheet (EQSDS) of the seismic qualification for each piece of safety-related seismic category I equipment (i.e., each mechanical and electrical component of each system), which summarize the component's qualification.

COL 3.10(4) Deleted

COL 3.10(5) Components that have been previously tested to IEEE Std 344-1971 prior to submittal of the DCD are reevaluated to justify the appropriateness of the input motion and requalify the equipment, if necessary. The COL Applicant is to requalify the component using biaxial test input motion unless the applicant provides justification for using a single-axis test input motion.

COL 3.10(6) Deleted

COL 3.10(7) Deleted

COL 3.10(8) For design of seismic category I and II SSCs that are not part of the standard plant, the COL Applicant can similarly eliminate the OBE, or optionally set the OBE higher than 1/3 SSE, provided the design of the non-standard plant's SSCs are analyzed for the chosen OBE.

COL 3.10(9) The COL Applicant is to investigate if site-specific in-structure response spectra generated for the COL application may exceed the standard US-APWR design's in-structure response spectra in the high-frequency range. Accordingly, the COL Applicant is to consider the functional performance of vibration-sensitive components, such as relays and other instrument and control devices whose output could be affected by high frequency excitation.

COL 3.10(10) Deleted

3.10.6 References

3.10-1 Criteria for Accident Monitoring Instrumentation for Nuclear Power Plants. Regulatory Guide 1.97, Rev. 4, United Stated Nuclear Regulatory Commission, Washington, DC, June 2006.

3.10-2 General Design Criteria for Nuclear Power Plants, Domestic Licensing of Production and Utilization Facilities, Energy. Title 10, Code of Federal

Regulations, Part 50, Appendix A, U.S. Nuclear Regulatory Commission, Washington, DC.

3.10-3 Quality Assurance Criteria for Nuclear Power Plants and Fuel Reprocessing Plants, Domestic Licensing of Production and Utilization Facilities, Energy. Title 10, Code of Federal Regulations, Part 50, Appendix B.

3.10-4 Policy, Technical, and Licensing Issues Pertaining to Evolutionary and Advanced Light-Water Reactor (ALWR) Designs. SECY-93-087, United States Regulatory Commission, April 2, 1993.

3.10-5 Earthquake Engineering Criteria for Nuclear Power Plants, Domestic Licensing of Production and Utilization Facilities, Energy. Title 10, Code of Federal Regulations, Part 50, Appendix S, U.S. Nuclear Regulatory Commission, Washington, DC.

3.10-6 Deleted

3.10-7 Seismic Qualification of Electric and Mechanical Equipment for Nuclear Power Plants. Regulatory Guide, 1.100, Rev. 3, U.S. Nuclear Regulatory Commission, Washington, DC, September 2009.

3.10-8 IEEE Recommended Practice for Seismic Qualification of Class 1E Equipment for Nuclear Power Generating Stations. Institute of Electrical and Electronics Engineers (IEEE) Std 344 -2004.

3.10-9 Seismic and Dynamic Qualification of Mechanical and Electrical Equipment. NUREG-0800, SRP 3.10, Rev. 3, U.S. Nuclear Regulatory Commission, Washington, DC, March 2007.

3.10-10 Boiler and Pressure Vessel Code. “Section III, Division 1, Nuclear Power Plant Components,” American Society of Mechanical Engineers.

3.10-11 Deleted

3.10-12 Qualification of Active Mechanical Equipment Used in Nuclear Power Plants. American Society of Mechanical Engineers (ASME) QME-1-2007.

3.10-13 Damping Values for Seismic Design of Nuclear Power Plants. Regulatory Guide 1.61, Rev. 1, U.S. Nuclear Regulatory Commission, Washington, DC, March 2007.

3.10-14 Guidance for Seismic Qualifications of Class 1 Electric Equipment for Nuclear Power Generating Stations. Institute of Electrical and Electronics Engineers (IEEE) Std 344-1971.

3.10-15 IEEE Standard for Qualifying Class 1E Equipment for Nuclear Power Generating Stations. Institute of Electrical and Electronics Engineers (IEEE) Std 323-1974.

3.10-16 Combining Modal Responses and Spatial Components in Seismic Response Analysis. Regulatory Guide 1.92, Rev. 2, U.S. Nuclear Regulatory Commission, Washington, DC, July 2006.

3.10-17 IEEE Standard for Qualification of Actuators for Power-Operated Valve Assemblies with Safety-Related Functions for Nuclear Power Plants, Institute of Electrical and Electronics Engineers (IEEE) Std 382-1996 (R2004).

3.10-18 Rules for Inservice Inspection of Nuclear Power Plant Components, ASME Boiler Pressure and Vessel Code. ASME Section XI, American Society of Mechanical Engineers.

3.10-19 Deleted

3.10-20 Initial Type Test Result of Class 1E Gas Turbine Generator System, MUAP-10023-P (Proprietary) and MUAP-10023-NP (Non-Proprietary), Rev. 5, December 2012.

3.11 Environmental Qualification of Mechanical and Electrical Equipment

Introduction

This section describes the implementation of the US-APWR environmental qualifications (EQ) program. The US-APWR EQ Program demonstrates and documents compliance with the requirements of 10 CFR 50, Appendix A, General Design Criteria 4, “Environmental and Dynamic Effects Design Bases,” (Reference 3.11-1) which requires:

> Structures, systems, and components important to safety shall be designed to accommodate the effects of and to be compatible with the environmental conditions associated with normal operation, maintenance, testing, and postulated accidents, including loss-of-coolant accidents.

Mechanical, electrical, and I&C equipment associated with systems described in this paragraph are included within the scope of this environmental qualification program:

a. Equipment associated with systems that are essential for emergency reactor shutdown, containment isolation, reactor core cooling, and containment and reactor heat removal, or otherwise are essential in preventing significant release of radioactive material to the environment,

b. Equipment that initiates the above functions automatically,

c. Equipment that is used by the operators to initiate the above functions manually,

d. Equipment whose failure can prevent the satisfactory accomplishment of one or more of the above safety functions,

e. Other electrical equipment important to safety, as described in 10 CFR 50.49(b)(1) and (2), and

f. Certain post-accident monitoring equipment, as described in 10 CFR 50.49(b)(3) and Regulatory Guide 1.97.

In this section the term "environmental qualification" means verification of design, limited to demonstrating that mechanical, electrical or I&C equipment are capable of performing their safety function under significant environmental stresses (i.e., harsh environments) resulting from design basis events in order to avoid common-cause failure. Additionally, environmental design requirements apply to all equipment listed above (i.e., both mild and harsh environments).

For active mechanical equipment meeting the equipment scope described above located in a harsh environment, compliance with the environmental design provisions of GDC 4 are generally achieved by demonstrating that the non-metallic parts/components are suitable for the postulated design basis environmental conditions.

For electrical and active mechanical devices located in mild environments, compliance with the environmental design provisions of GDC 4 are generally achieved and

demonstrated by proper incorporation of relevant environmental conditions into the design process, including the equipment specification.

The general requirements for environmental design and qualification can be summarized as follows: (1) the equipment shall be designed to have the capability of performing its design safety functions under all anticipated operational occurrences and normal, accident, and post-accident environment, and for the length of time for which its function is required; (2) the environmental qualification of equipment located in harsh environment shall be demonstrated by appropriate testing and/or analyses; and (3) a QA program meeting 10 CFR 50, Appendix B, shall be established and implemented to provide the assurance that all requirements have been satisfactorily accomplished. Environmental design and qualification requirements are described in MHI Technical Report MUAP-08015, “US-APWR Equipment Qualification Program,” issued as a separate report (Reference 3.11-3).

This equipment is addressed in the EQ Program to verify it is capable of performing its design function(s) under all anticipated service conditions. These service conditions are defined in 10 CFR 50.49(b)(1)(ii), (Reference 3.11-2) and are listed below. There is no nonsafety-related electrical equipment, located in a harsh environment, whose failure under postulated environmental conditions could prevent satisfactory accomplishment of safety functions by the safety-related equipment. The equipment addressed by the EQ Program is identified in Table 3D-2.

The typical design basis events include the following:

1. Normal operating conditions (e.g., refueling, shutdown, startup, operating)
2. AOO (e.g., plant trips, testing)
3. DBAs (e.g., LOCA, HELB)
4. External events (e.g., loss of offsite power)
5. Natural phenomena (e.g., earthquake, tornado, hurricane)

Technical report MUAP-08015 addresses the relevant environmental design and qualification requirements of 10 CFR 50.49; 10 CFR Part 50, Appendix A, General Design Criteria 1, 2, 4, and 23; and 10 CFR Part 50, Appendix B, Quality Assurance Criteria III, XI, and XVII; with respect to systems and components being designed to withstand the effects of, and being capable of performing their safety function, in the environmental conditions associated with normal operation, maintenance, testing, and accident conditions. This report also addresses seismic qualification as described in Section 3.10, and functional qualification of active mechanical components described in Section 3.9, as an integrated US-APWR equipment qualification program as described in Appendix 3D. Implementation of the EQ Program is addressed as part of this integrated equipment qualification program.

The Technical Report describes the EQ Program applicable to each licensed US-APWR. The Report describes the EQ process and its implementation during the design, procurement, construction, startup, and turnover phases of a US-APWR plant project. It

identifies the various qualification programs, procedures, and policies that MHI and the applicable Architect/Engineer/Constructor implements in conjunction with the delivery of a US-APWR plant. The Report discusses the application of the EQ Program to both domestic and international suppliers of the electrical and mechanical equipment listed in Table 3D-2. The EQ Program, quality assurance, record keeping, and associated programmatic interfaces is described to facilitate implementation of the post-turnover EQ Program by the licensee. The COL Applicant is to provide a schedule showing the EQ Program proposed implementation milestones.

The COL Applicant is responsible for assembling and maintaining the environmental qualification document, which summarizes the qualification results for all equipment identified in Appendix 3D, for the life of the plant. The environmental qualification document is to address the following information:

- Identification of the equipment and applicable plant, system, and equipment selection basis, particularly with respect to normal environmental conditions, AOOs, accident, post-accident, and test environmental conditions.
- Designated functional requirements, the definition of the applicable environmental parameters, and the documentation of the qualification process employed to demonstrate that the required environmental compliance is achieved.
- Identification of the test environmental parameters and the methodology used to qualify the equipment located in harsh environments.
- A summary of environmental conditions and qualified conditions for the equipment located in a harsh environment zone are presented in the system component evaluation work sheets or packages and are compiled in the environmental qualification document.

The seismic qualification requirements applicable to this equipment are described in Section 3.10 and the environmental requirements are listed in Table 3D-2.

The COL Applicant is to describe periodic tests, calibrations, and inspections to be performed during the life of the plant, which verify the identified equipment remains capable of fulfilling its intended function. The procedures and results of qualification by tests, analyses, or other methods for the safety-related equipment are documented and maintained as part of the unit's environmental qualification document.

Purpose

The purpose of the EQ Program is to provide a programmatic basis to identify, document and confirm compliance with General Design Criteria 4 and 10 CFR 50.49 (References 3.11-1, 3.11-2). Compliance with the EQ Program requirements is necessary to assure that the equipment is capable of performing its design safety function(s) under all normal environmental conditions, AOOs, and accident and post-accident environmental conditions.

The environmental conditions which the equipment qualification process addresses include:

1. Environment (temperature, pressure, spray, submergence, and humidity)
2. Seismic (mechanical shock)
3. Chemical (reactions and composition issues)
4. Radiation (normal [including long term] and accident level exposures)
5. Performance (voltage, load, aging effects, allowable margins, etc.)
6. Synergistic effects (e.g., system interactions, testing stresses)

The US-APWR EQ Program is generic to all US-APWRs and is, in turn, implemented for each specific plant licensed. This EQ process is illustrated in Figure 3.11-1. The implementation of the US-APWR EQ Program follows distinct phases. The EQ Program is defined herein and is, in turn, implemented during a specific plant's design, procurement, construction, startup, and operational phases. The reason for this sequence is that the programmatic responsibilities shift as a specific plant is designed and constructed. At the onset of a project, the EQ Program is the responsibility of the plant vendor. The program is implemented by the vendor and the project architect/ engineer during the design phases. At this point, the required environmental parameters, listed above, are finalized by analysis. These parameters are then factored into equipment procurement specifications, where applicable, during the procurement phase. In some cases, the equipment is qualified by testing or other means. Compliance with EQ requirements is documented and this information is assembled as the project progresses. The EQ Program continues during the construction and startup phases (i.e., additional testing and analysis) and as the plant is nearing completion, the EQ Program responsibilities, including the assembled documentation, is transferred to the plant owner. This information is reviewed by the NRC and the demonstration of satisfactory compliance with EQ requirements is a condition for obtaining the plant-operating license. The plant owner is responsible for maintaining the EQ Program for the operating life of the plant.

Environmental Design Basis

The EQ Program qualification process uses the following environmental condition definitions:

- **Normal Operating Conditions** – The planned, unrestricted, reactor operations. These are the everyday working environmental parameters that the equipment is expected to experience (i.e., the conditions that the equipment is designed to see during normal plant operations).
- **Abnormal Operating Conditions** – Any deviation from normal operating conditions.
- **Test Conditions** – The actuation, operation, or establishment of specified conditions to evaluate the performance or integrity of systems, or components unless explicitly stated otherwise.

- **Accident Conditions** – An unexpected event occurring during normal operating conditions, which may have potentially harmful effect.

- **Post-Accident Conditions** – The end result of accidental conditions.

These environmental conditions are normally associated with various plant areas by environmental zones or locations. Environmental conditions within these zones are defined as either mild or harsh based on the anticipated most extreme condition anticipated for this zone.

3.11.1 Equipment Location and Environmental Conditions

The US-APWR EQ Program complies with the applicable requirements delineated in RG 1.89 (Reference 3.11-4). However, while NUREG-0588 (Reference 3.11-5) is not directly applicable, this NUREG did provide guidance on classifying equipment based on generic locations (A, B, C, and D). A similar approach is used for the US-APWR EQ Program. These locations are described below.

Equipment Category A Location: Equipment that will experience the environmental conditions associated with a DBA for which it must function to mitigate the accident and that will be qualified to demonstrate operability in the accident environment for the time required for accident mitigation with safety margin to failure (per 10 CFR 50, Appendix E [Reference 3.11-6], and NUREG-0588 [Reference 3.11-5]).

Equipment Category B Location: Equipment that will experience the environmental conditions associated with DBAs through which it need not function for the mitigation of said accidents, and through which it must not fail in a manner detrimental to plant safety or accident mitigation, and that will be qualified to demonstrate the capability to withstand any accident environment for the time during which it must not fail with safety margin to failure.

Equipment Category C Location: Equipment that will experience the environmental condition of DBAs through which it need not function for mitigation of said accidents, and whose failure (in any mode) is deemed not detrimental to plant safety or accident mitigation, and need not be qualified for any accident environment, but will be qualified for its non-accident service environment.

Equipment Category D Location: Equipment that will not experience environmental condition of DBAs and that will be qualified to demonstrate operability under the expected extremes for its non-accident service environment.

3.11.1.1 Equipment Identification

Safety-related systems are identified in Section 3.2. Equipment qualified by the EQ Program is listed in Table 3D-2. The equipment is identified by system, location, type (electrical or mechanical or both), environment, and associated environmental parameters. Appendix 3D provides a brief explanation as to how this equipment was identified and the associated analysis that was performed to establish the required environmental parameters. The COL Applicant is to identify the site-specific equipment to be addressed in the EQ Program, including locations and environmental conditions.

The identification list and a summary of electrical and mechanical equipment qualification results are maintained as part of the equipment qualification record file in accordance with Quality Assurance Criteria for Nuclear Power Plants and Fuel Reprocessing Plants (Reference 3.11-7).

3.11.1.2 Definition of Environmental Conditions

The general environmental parameters that are addressed in the qualification process are temperature, pressure, humidity, chemical effects (including pH), radiation, aging, submergence, and synergistic effects. An allowance for adequate margin in these parameters is provided in the program. These parameters reflect the appropriate consideration of the most severe natural phenomena, which have been recorded in the past 60 year period or identified by analysis. Optionally, the COL Applicant may revise the parameters based on site-specific considerations. Two plant environmental conditions, harsh or mild, are used in the qualification process. These are defined in the paragraphs below.

Harsh Environment

Equipment that must withstand and is subject to the environmental conditions that would exist, before, during, and following a DBA is qualified for use in harsh environments. A DBA, such as a LOCA could subject this equipment to elevated pressures, temperatures, humidity (spray or submergence), radiation, and chemical effects (including post accident pH control). This equipment must operate without a loss of its safety function, for the time required to perform its engineered safeguards function(s). These environmental conditions that the equipment is qualified for include applicable time dependent temperature and pressure profiles, humidity, chemical effects, radiation, aging, submergence, and those synergistic effects, which have a significant effect on the equipment performance. Equipment identified in Table 3D-2 as being qualified for harsh environments includes the following:

a. Equipment located within containment

b. Equipment subject to HELBs (e.g., MSLB) both inside and outside of containment

c. Other SSCs which connect, support, or tie into or which can influence the equipment listed in “a” and “b”

Equipment items “b” and “c” are qualified for harsh environment only when associated with safety-related equipment or are necessary to support the operation of the equipment listed in Table 3D-2. For brevity, Table 3D-2 only identifies the associated equipment by device tag or instrument loop. However, the associated components, sensors, supports, and mechanical piping, valves, cables, penetrations, devices, and similar items needed for a fully functional device (e.g., motor operated valve) are also qualified in the EQ Program. The term sensor can refer to a transmitter, a resistance temperature detector, a thermocouple, or other transducer. The associated cables, connectors, terminals, preamplifiers, referenced junction boxes, or other electronic signal processing equipment, including digital components, that are located in the immediate proximity of the sensor are also subjected to the same harsh environmental conditions and associated EQ Program

qualification process. Electrical equipment located in harsh environments is qualified pursuant to the requirements delineated in IEEE Std 323-1974 (Reference 3.11-8).

Mild Environment

Mild environments are similar to those in a factory or office. A mild environment is one in which conditions are not expected to vary during normal and off-normal conditions, including DBAs. The plant MCR, as well as many equipment rooms, are considered mild environments. Normally, equipment located in mild environments can and is qualified by designating the appropriate environmental parameters in the purchase specifications and receiving certification from the supplier or vendor that this equipment will operate satisfactorily in that environment. Seismic and aging qualification may still require testing or additional analysis.

3.11.1.3 Equipment Operability Times (Term)

Equipment operating times and their bases are shown in Appendix 3D.

3.11.1.4 Standard Review Plan Evaluation

Design Control: The US-APWR EQ Program establishes procedures to assure the proper control during the design process to identify, document, and implement the specific EQ parameters for each piece of equipment designated in Appendix 3D. EQ parameters are established during the detailed design and analysis phase of the US-APWR development (see Figure 3.11-1). The applicable design basis codes and standards, equipment performance requirements, and associated EQ parameters for the equipment and the associated systems and components listed in Table 3D-2 are documented in the corresponding equipment specifications, drawings, procedures, instructions, and qualifications packages consistent with the requirements of 10 CFR 50, Appendix B, Section III (Reference 3.11-7), 10 CFR 50.49(f) and 10 CFR 50.49(j).

The specific normal and transient service conditions are identified in the design process for equipment located both inside and outside of the plant. These service conditions may include temperature extremes, including freezing, as part of the environmental requirements. Special considerations (which include heat tracing, insulation, wind shields, etc.) are addressed in the design process for maintaining system operability for outdoor components including instrument sensing lines (Reference 3.11-9).

3.11.2 Qualification Tests and Analyses

ITAAC is also known as the plant operational program review. An applicant or licensee who references the US-APWR Design Certification rule performs and demonstrates conformance with the ITAAC in conjunction with the licensing process. A number of tests and design verifications are performed in conjunction with the US-APWR EQ Program are summarized in Table 3.11-1. Verification of conformance to the EQ Program objectives includes performance of various construction and startup tests and then after turnover to the licensee, periodic surveillances and inspections. Routine maintenance and calibrations performed by the licensee are intended to detect degradations in SSCs in time to allow repairs or replacement of these items. Licensee ISI programs as well as replacement of plant components within the plant's 60-year lifetime assure compliance

with EQ Program requirements. These licensee programs minimize the possibility of unknown effects, including common mode failures going undetected. The need for additional plant specific tests is developed as identified and included during the application process.

Aging: The equipment is qualified for aging by test or analysis, which considers natural or artificial (accelerated) aging to its end-of-installed life condition. Consideration is given to all significant types of degradation, which can have an effect on the functional capability of the equipment. Since the effects of aging are sometimes difficult to quantify, a rigorous, periodic inspection, test, and calibration program is implemented during the life of the plant to verify that systems and components remain operational.

Synergistic Effects: The US-APWR EQ process involves detailed testing during the procurement, construction, and startup phases. As equipment is installed and tested, synergistic effects are evaluated to verify that these effects do not adversely impact the qualification of the electrical equipment. An example of this testing is the onsite testing for electromagnetic and radio frequency interference. Testing is performed that complies with the guidance provided in RG 1.180, Guidelines for Evaluating Electromagnetic and Radio Frequency Interference in Safety-Related Instrument and Control Systems (Reference 3.11-10). Other tests are conducted to verify satisfactory performance of mechanical and electrical systems in their installed environments. Examples of these tests include thermal expansion tests, vibration tests, and process interaction tests (usually performed in conjunction with hot functional testing). These various tests augment the EQ process and assist in meeting the intent of evaluating synergistic effects that could have an adverse impact on equipment included in Table 3D-2.

3.11.2.1 Environmental Qualification of Electrical and Mechanical Equipment

The environment qualification parameters vary according to the equipment location and the type of structure in which it is located. The environmental parameters identified in Chapter 5 of Technical Report MUAP-08015 (Reference 3.11-3) shall be used for the functional design and qualification of electrical and active mechanical components identified in Table 3D-2.

The environmental conditions shown in Appendix 3D reflect the worst-case scenario identified by analysis of a compendium of accident conditions for that location. The environmental parameters shown are the expected conditions and do not include any tolerance margin. Hence, to allow for tolerance, the margins between the most severe specified service conditions of the plant and the condition used for the qualification are evaluated. The result is then included in the parameters to account for tolerances when documenting satisfactory compliance of the equipment with environmental conditions. For the electrical and mechanical equipment, a 60-year life is used for the design basis unless otherwise stated. The ability of this equipment to operate over this period is verified by periodic inspection and testing. Equipment that does not have a 60-year service life is expected to be replaced or otherwise evaluated during the life of the plant on a scheduled basis.

During certain DBAs, depending upon the nature of the equipment's function during and after the DBA, some electrical and mechanical equipment may only be required to function for an interval of a few minutes of the accident up to approximately 10 hours.

Such equipment is shown to remain functional in the accident environment for period of at least 1 hour in excess of the time assumed in the accident analysis unless a time margin of less than 1 hour can be justified.

The equipment required to operate under these conditions is qualified considering the following:

- The sequence of events, which may affect the operations of the equipment.
- The use of the equipment during and after recovery operations.
- A determination that the failure of the equipment after performance of its safety function is not detrimental to plant safety nor can it mislead plant operators.
- Determination that the margin applied to the minimum operability time, when combined with other test margins, accounts for the uncertainties associated with the use of analytical techniques in the derivation of environmental parameters, the number of units tested, production tolerances, and test equipment inaccuracies.

For equipment with a required time of operation during an accident of more than 10 hours, it is demonstrated that it remains functional under accident conditions for a period of time at least 10% longer than the required time of operation.

The US-APWR EQ Program follows the guidance provided in RG 1.89 (Reference 3.11-4), for electrical components and instruments. RG 1.89 (Reference 3.11-4) endorses IEEE Std 323-1974 (Reference 3.11-8) which is part of the implementing basis for the US-APWR EQ Program. The equipment location, relative to flooding and spray (LOCA or HELB), is factored into the US-APWR EQ qualification process. Other applicable RGs and requirements include the following:

- Regulatory Guide 1.40, Qualification of Continuous-Duty Safety-Related Motors for Nuclear Power Plants (Reference 3.11-11).
- Regulatory Guide 1.63, Electric Penetration Assemblies in Containment Structures for Nuclear Power Plants (Reference 3.11-12).
- Regulatory Guide 1.73, Qualification Tests of Electric Valve Operators Installed Inside the Containment of Nuclear Power Plants (Reference 3.11-13).
- Regulatory Guide 1.89 Environmental Qualification of Certain Electric Equipment Important to Safety in Nuclear Power Plants (Reference 3.11-4).
- Regulatory Guide 1.97, Criteria for Accident Monitoring Instrumentation for Nuclear Power Plants (Reference 3.11-14).
- Regulatory Guide 1.151, Instrument Sensing Lines (Reference 3.11-9).
- Regulatory Guide 1.156, Environmental Qualifications of Connection Assemblies for Nuclear Power Plants (Reference 3.11-16).

- Regulatory Guide 1.158, Qualification of Safety-Related Lead Storage Batteries for Nuclear Power Plants (Reference 3.11-17).
- Regulatory Guide 1.180, Guidelines for Evaluating Electromagnetic and Radio Frequency Interference in Safety-Related Instrumentation and Control Systems (Reference 3.11-10).
- Regulatory Guide 1.183, Alternative Radiological Source Term for Evaluating Design Basis Accidents at Nuclear Power Reactors (Reference 3.11-18).
- Adherence to General Design Criteria 1, 2, 4 and 23 of 10 CFR 50, Appendix A (Reference 3.11-1).
- Quality Assurance in accordance with 10 CFR 50, Appendix B (Reference 3.11-7).
- Regulatory Guide 1.211, Qualification of Safety-Related Cables and Field Splices for Nuclear Power Plants (Reference 3.11-21).

3.11.2.2 Environmental Qualification of Mechanical Equipment

A discussion of the EQ of the mechanical equipment is included in Subsection 3.11.2.1 and further elaborated in this sub-section. Active and passive mechanical equipment is qualified as part of the US-APWR EQ Program. Active mechanical equipment qualification is discussed in Subsection 3.9.3 and in Appendix 3D. The EQ program provides for qualification of non-metallic components such as gaskets, O-rings, seals, and lubricants for mechanical equipment included in Table 3D-2. Non-active mechanical equipment, that is equipment whose primary safety function is structural integrity (support or pressure boundary), is qualified pursuant to the requirements of ASME Boiler and Pressure Vessel Code, Section III. In addition, certain mechanical structures are qualified in conjunction with plant startup testing (e.g., the reactor containment structure is qualified, in part, by the performance of various construction tests [e.g., weld certifications] and the performance of the containment ILRT).

3.11.3 Qualification Test Results

Environmental qualification of the equipment listed in Table 3D-2 may rely on testing in conjunction with the verification process. Where the qualification process involves testing, the various tests are conducted following written test procedures in compliance with the requirements of 10 CFR 50, Appendix B, Criterion XI, Test Control (Reference 3.11-7) and 10 CFR 50.49(f). These tests may apply to aging, seismic, radiation, or environmental qualification parameters.

The tests may be performed by the manufacturers, qualified testing laboratories, or during the construction and startup phases as part of the ITAAC process. Procurement associated testing results are documented prior to installation. The preoperational and operational tests results are recorded and verified against acceptance limits contained in

the applicable design documents, and associated environmental parameters determined in support of the formulation of Appendix 3D.

The testing is performed to verify that equipment included in Table 3D-2 operates satisfactorily in service and in accordance with their design basis. The test results are documented and evaluated to assure that EQ requirements have been satisfied.

Equipment that has been previously qualified by means of tests and analyses may not need to be retested for qualification provided proper documentation of such tests and analyses is available (Reference 3.11-4).

The COL Applicant is to describe how the results of the qualification tests are to be recorded in an auditable file in accordance with requirements of 10 CFR 50.49 (j) (Reference 3.11-2). Such a record is maintained for the entire period during which the related equipment remains installed in the plant, stored for future use, or is held for permit verification.

3.11.4 Loss of Ventilation

HVAC systems provide ventilation, help reduce air infiltration, and maintain pressure relationships between spaces. The design and evaluation of the plant's HVAC systems is described in Section 9.4. Electrical equipment located in conditioned spaces is evaluated for performance during the loss of HVAC type events. Equipment which may be impacted by inadequate ventilation or a loss of environmental control is identified during the design process. In many cases, this equipment is only required to function for a short period of time during or following a DBA, in which case, a loss of ventilation may impact the equipment after it has fulfilled its safety function. Equipment impacted by a loss of environmental control is qualified pursuant to the implementation of the US-APWR EQ Program.

The COL Applicant is to qualify site-specific electrical and mechanical equipment (including instrumentation and control, and certain accident monitoring equipment) using a qualification process that is equivalent to that delineated for the US-APWR Standard Plant, as described in Technical Report MUAP-08015 (Reference 3.11-3). This includes equipment that is subject to environmental control systems including heat tracing and air conditioning.

3.11.5 Estimated Chemical and Radiation Environment

The COL Applicant is to identify chemical and radiation environmental requirements for site-specific qualification of electrical and mechanical equipment (including instrumentation and control, and certain accident monitoring equipment). This equipment is to be qualified using a qualification process that is equivalent to that delineated for the US-APWR Standard Plant, as described in Technical Report MUAP-08015 (Reference 3.11-3).

3.11.5.1 Chemical Environment

The adverse effects of various chemicals used within the plant are normally contained by design. However, during a DBA, various chemicals can be released into the equipment's

environment, which could impair the ability of the equipment to operate. The impact of the various chemicals used in the plant is factored into the design and EQ process. Chemical exposure also includes the potential for exposure to hydrogen based on a 100% fuel-clad metal-water reaction (10 CFR 50.44(c), [Reference 3.11-19]). Equipment subject to chemical exposure, including submergence, are qualified with concentrations of chemicals equivalent or more severe than those resulting from the most limiting mode of the plant operations associated with DBAs. Mechanical equipment is evaluated during the design (analysis) and procurement phases for exposure to various chemicals applicable to normal and off normal conditions. Requirements to be able to withstand the effects of chemical exposure are factored into the procurement process. Equipment subject to chemical exposure following a DBA is identified and qualified, pursuant to the implementation of the US-APWR EQ Program.

3.11.5.2 Radiation Environment

Areas in the plant are subject to varying levels of radiation exposure during normal and accident conditions. Radiation environments also exist in those plant areas where there is the potential for airborne contamination, for those process and effluent streams where contamination is possible, and in accessible areas as a result of unusual radiological events. The normal operational radiation exposure is based on the radiation sources (source term) provided in Chapter 12.

The radiation sources presented in this DCD are developed from the DBA available data and in accordance with NUREG-1465 (Reference 3.11-20). The radiation (neutron, beta and gamma) dose rates and integrated doses for normal, accident, post-accident, and harsh environmental conditions for various plant locations are presented in Technical Report, MUAP-08015, US-APWR Equipment Qualification Program (Reference 3.11-3). The values presented in the Technical Report are used as the basis for electrical and mechanical equipment dose exposures presented in Appendix 3D. Their parameters are presented in time-based units, where appropriate.

The expected levels of radiation exposure factored into the design process are based on the type of radiation, the total dose expected during normal operation over the installed life of the equipment, and the radiation environment associated with the most severe DBA during or following an accident in which the equipment is required to remain functional, including the radiation resulting from re-circulating fluids for equipment located near the re-circulating lines and including dose-rate effects. Equipment that will not be exposed to total integrated doses of 10^4 Rads as a result of a DBA is not qualified for radiation exposure in most cases. In all cases, each piece of equipment in a potential harsh environment is evaluated for the need for qualification due to radiation exposure.

Electrical and mechanical equipment subject to radiation exposure is qualified for use in the US-APWR pursuant to the implementation of the US-APWR EQ Program. For equipment that is only located in areas considered harsh by the potential presence of radiation, this equipment is qualified by analysis and partial test data with the appropriate considerations for margins and aging effects.

3.11.6 Qualification of Mechanical Equipment

The qualification of mechanical equipment is included in Subsection 3.11.2.1.

The COL Applicant is to provide the site-specific mechanical equipment requirements. This equipment is to be qualified using a qualification process that is equivalent to that delineated for the US-APWR Standard Plant, as described in Technical Report MUAP-08015 (Reference 3.11-3).

3.11.7 Combined License Information

COL 3.11(1) *The COL Applicant is responsible for assembling and maintaining the environmental qualification document, which summarizes the qualification results for all equipment identified in Appendix 3D, for the life of the plant.*

COL 3.11(2) *The COL Applicant is to describe how the results of the qualification tests are to be recorded in an auditable file in accordance with requirements of 10 CFR 50.49 (j).*

COL 3.11(3) *The COL Applicant is to provide a schedule showing the EQ Program proposed implementation milestones.*

COL 3.11(4) *The COL Applicant is to describe periodic tests, calibrations, and inspections to be performed during the life of the plant, which verify the identified equipment remains capable of fulfilling its intended function.*

COL 3.11(5) *The COL Applicant is to identify the site-specific equipment to be addressed in the EQ Program, including locations and environmental conditions.*

COL 3.11(6) *The COL Applicant is to qualify site-specific electrical and mechanical equipment (including instrumentation and control, and certain accident monitoring equipment) using a qualification process that is equivalent to that delineated for the US-APWR Standard Plant, as described in Technical Report MUAP-08015.*

COL 3.11(7) *The COL Applicant is to identify chemical and radiation environmental requirements for site-specific qualification of electrical and mechanical equipment (including instrumentation and control, and certain accident monitoring equipment).*

COL 3.11(8) *The COL Applicant is to provide the site-specific mechanical equipment requirements.*

COL 3.11(9) *Optionally, the COL Applicant may revise the parameters based on site-specific considerations.*

3.11.8 References

3.11-1 General Design Criteria for Nuclear Power Plants, Domestic Licensing of Production and Utilization Facilities, Energy. Title 10, Code of Federal Regulations, Part 50, Appendix A, U.S. Nuclear Regulatory Commission, Washington, DC.

3.11-2 Environmental Qualification of Electric Equipment Important to Safety for Nuclear Power Plants, Domestic Licensing of Production and Utilization Facilities, Energy. Title 10, Code of Federal Regulations, Part 50.49, U.S. Nuclear Regulatory Commission, Washington, DC.

3.11-3 US-APWR Equipment Qualification Program, MUAP-08015, Rev. 1, November 2009.

3.11-4 Environmental Qualification of Certain Electrical Equipment Important to Safety for Nuclear Power Plants, Regulatory Guide 1.89, Rev. 1, U.S. Nuclear Regulatory Commission, Washington, DC, June 1984.

3.11-5 Interim Staff Position on Environmental Qualification of Safety-Related Electrical Equipment. NUREG-0588, Rev. 1, U.S. Nuclear Regulatory Commission, Washington, DC, July 1981.

3.11-6 Emergency Planning and Preparedness for Production and Utilization Facilities, Domestic Licensing of Production and Utilization Facilities, Energy. Title 10, Code of Federal Regulations, Part 50, Appendix E, U.S. Nuclear Regulatory Commission, Washington, DC.

3.11-7 Quality Assurance Criteria for Nuclear Power Plants and Fuel Reprocessing Plants, Domestic Licensing of Production and Utilization Facilities, Energy. Title 10, Code of Federal Regulations, Appendix B, III, XVII, XI, U.S. Nuclear Regulatory Commission, Washington, DC.

3.11-8 IEEE Standard for Qualifying Class 1E Equipment for Nuclear Power Generating Stations, IEEE Std 323-1974, Institute of Electrical and Electronics Engineers (endorsed by Regulatory Guide 1.89 and NUREG-0588).

3.11-9 Instrument Sensing Lines, Regulatory Guide 1.151, U.S. Nuclear Regulatory Commission, Washington, DC, July 1983.

3.11-10 Guidelines for Evaluating Electromagnetic and Radio Frequency Interference in Safety-Related Instrumentation and Control Systems. Regulatory Guide 1.180, Rev. 1, U.S. Nuclear Regulatory Commission, Washington, DC, October, 2003.

3.11-11 Qualification of Continuous-Duty Safety-Related Motors for Nuclear Power Plants. Regulatory Guide 1.40, Rev. 1, U.S. Nuclear Regulatory Commission, Washington, DC, February 2010.

3.11-12 Electric Penetration Assemblies in Containment Structures for Nuclear Power Plants. Regulatory Guide 1.63, Rev. 3, U.S. Nuclear Regulatory Commission, Washington, DC, February 1987.

3.11-13 Qualification Tests of Electric Valve Operators Installed Inside the Containment of Nuclear Power Plants. Regulatory Guide 1.73, U.S. Nuclear Regulatory Commission, Washington, DC, January 1974.

3.11-14 Criteria for Accident Monitoring Instrumentation for Nuclear Power Plants. Regulatory Guide 1.97, Rev. 4, U.S. Nuclear Regulatory Commission, Washington, DC, June 2006.

3.11-15 Deleted

3.11-16 Environmental Qualification of Connection Assemblies for Nuclear Power Plants. Regulatory Guide 1.156, U.S. Nuclear Regulatory Commission, Washington, DC, November 1987.

3.11-17 Qualification of Safety-Related Lead Storage Batteries for Nuclear Power Plants. Regulatory Guide 1.158, U.S. Nuclear Regulatory Commission, Washington, DC, February 1989.

3.11-18 Alternative Radiological Source Terms for Evaluating Design Basis Accidents at Nuclear Power Reactors. Regulatory Guide 1.183, U.S. Nuclear Regulatory Commission, Washington, DC, July 2000.

3.11-19 Combustible Gas Control System in Light-Water-Cooled Power Reactors, Domestic Licensing of Production and Utilization Facilities, Energy. Title 10, Code of Federal Regulations, Part 50.44(c), U.S. Nuclear Regulatory Commission, Washington, DC.

3.11-20 Accident Source Terms for Light-Water Nuclear Power Plants – Final Report. NUREG-1465, U.S. Nuclear Regulatory Commission, Washington, DC.

3.11-21 Qualification of Safety-Related Cables and Field Splices for Nuclear Power Plants, Regulatory Guide 1.211, U.S. Nuclear Regulatory Commission, Washington, DC, April 2009.

3.11-22 Environmental Qualification of Mechanical and Electrical Equipment. NUREG-0800, SRP 3.11, Rev. 3, U.S. Nuclear Regulatory Commission, Washington, DC, March 2007.

Table 3.11-1 Summary of US-APWR EQ Program Mechanical SSC Interfaces

EQ Interfaces Information Requirement	DCD Chapter (Section #)
1. Verification of the design, installation, inspection, and testing of containment systems	Subsections 6.2.1 to 6.2.6
2. Verification of the design, installation, inspection, and testing of the Residual Heat Removal System	Subsection 5.4.7
3. Verification of the design, installation, inspection, and testing of the Emergency Core Cooling System	Section 6.3
4. Verification of the Accident Analysis	Chapter 15
5. Verification of the functional design, installation, inspection, and testing of the I&C system and digital equipment	Chapter 7
6. Verification of the design, installation, inspection, and testing of the electrical power systems	Chapter 8
7. Verification of the design, installation, inspection, and testing of the Containment Spray System	Subsection 6.5.2
8. Verification of the adequacy of chemical conditions to accident and post accident EQs	Subsection 6.5.2
9. Verification of the adequacy of ventilation system for safety-related equipment	Subsection 9.4.5
10. Adequacy of 10 CFR 50, Appendix B Criteria III, XI, and XVII for Quality Assurance	Chapter 17
11. Verification of Radiological consequences with DBA	Subsection 15.0.3
12. Functional design verification of:	
12-a. adverse flow effects on mechanical, electrical equipment evaluation	Subsection 3.9.5
12-b. Design qualification and dynamic restrain of equipment	Subsection 3.9.6
12-c. Natural Phenomena and external events protection for mechanical and electrical equipment	Chapter 3 (appropriate sections)
13. Verification of equipment functionality during and after being exposed to a DBA	Subsection 6.2.5
14. COL reviews of operation programs	Section 13.4

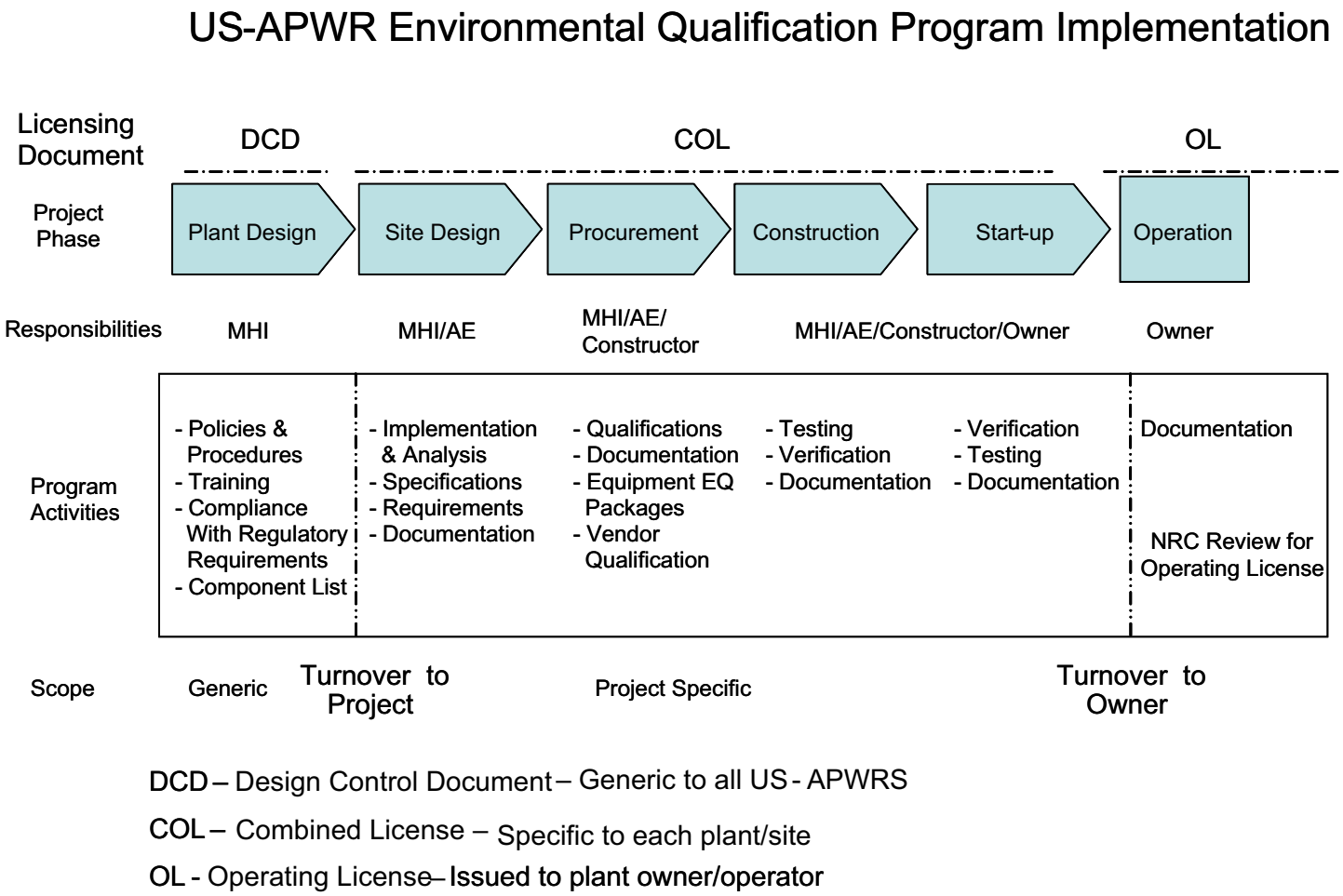

DCD – Design Control Document – Generic to all US - APWRS

COL – Combined License – Specific to each plant/site

OL - Operating License – Issued to plant owner/operator

Figure 3.11-1 Project EQ Program Implementation Framework

3.12 Piping Design Review

3.12.1 Introduction

This section covers the design of the US- APWR plant and site-specific piping systems and piping supports which comprise seismic category I and non-seismic category I (seismic category II and non-seismic) piping systems. Seismic categories are defined in Subsection 3.2.1. The design of the RCL piping is covered by Subsection 3.9.3.

Generally, all ASME Code, Section III, Classes 1, 2, and 3 piping systems belong to seismic category I piping class.

The seismic category II piping, such as ASME B31.1 (Reference 3.12-1), is evaluated for seismic category requirements as stipulated in this section.

The non-seismic piping systems are designed to seismic requirements based on the applicable building code requirements appropriate for a power plant facility.

This section discusses the adequacy of the structural integrity as well as the functional capability of the seismic category I piping systems, and their associated supports. Piping systems are designed to perform their safety-related functions under all postulated combinations of normal operating conditions, system operating transients, postulated pipe breaks, and seismic category I events (i.e., SSE and OBE). This includes pressure retaining piping components and their supports, instruments lines, and the interaction of seismic category II piping and associated supports with seismic category I piping and associated supports. This section covers the design transients and resulting loads and load combinations with appropriate specified design and service limits for seismic category piping and piping supports, including those designed as ASME Code, Section III, Division 1, Class 1, 2 and 3 (Reference 3.12-2), and those covered by the ASME B31.1 Code for Pressure Piping, Power Piping (Reference 3.12-1).

3.12.2 Codes and Standards

Codes and standards used in the design of piping systems and piping supports are consistent with 10 CFR 50, Appendix A (Reference 3.12-3), GDCs 1, 2, 4, 14, and 15 as described in Section 3.1, and 10 CFR 50, Appendix S (Reference 3.12-4).

3.12.2.1 American Society of Mechanical Engineers Boiler and Pressure Vessel Code

Piping analysis for the US-APWR uses the 1992 Edition including 1992 Addenda of the ASME Code, Section III, Division 1, Subsections NB, NC, and ND (Reference 3.12-2) in accordance with the requirements of 10 CFR 50.55a except for stress indices for ASME Class 1 piping and stress intensification factor for ASME Classes 2 and 3 piping for girth fillet weld. Those stress indices and intensification factor will use the 1989 Edition of ASME Code Section III, Division 1, Subsection NB, NC, and ND.

As for ASME Code Section II, 2001 Edition including 2003 Addenda (Reference 3.12-42) is used in piping analysis for the US-APWR.

3.12.2.2 American Society of Mechanical Engineers Code Cases

ASME, Code Cases N-122-2, N-318-5, N-391-2, N-392-3, and N-319-3 (Reference 3.12-5) are applicable for the design of the piping system and the piping supports for the US-APWR. These code cases are acceptable on the basis of RG 1.84, Rev.34 (Reference 3.12-6). Other ASME code cases may be used in the design certification if they are either conditionally or unconditionally approved in RG 1.84 (Reference 3.12-6). Code cases listed in RG 1.193 (Reference 3.12-7) are not to be utilized without the approval of the NRC.

ASME Code Case N-782 is applicable for the design of piping systems and the piping supports for the US-APWR on the basis of 10 CFR 50.55a(a)(3)(i) as discussed in Table 5.2.1-2 Note(1).

3.12.2.3 Design Specification

The design specification and the design reports are to be developed in accordance with the ASME Code, Section III, Division 1 (Reference 3.12-2).

3.12.3 Piping Analysis Methods

Seismic analysis for all seismic category I and II piping systems use methods in accordance with NUREG-0800, SRP 3.7.3, Rev. 3 (Reference 3.12-8). These methods, as discussed below, include the response spectrum method, time history method, or where applicable, the equivalent static load method. For modeling supports in the piping analysis, the de-coupled support model is used, whereby the support is modeled as a restraint with specified support stiffness; or an integrated support model is used, whereby the actual structural model of the support is included in the analysis. In the de-coupled support modeling technique, requirements to maintain minimum support stiffness and limit deflection under dynamic load to a pre-set limit have to be addressed separately as described in Subsection 3.12.6.7, where as, in the integrated support modeling technique, these parameters are considered and no separate check is required.

3.12.3.1 Experimental Stress Analyses

Experimental stress analysis methods are not used for the design of piping and supports

3.12.3.2 Modal Response Spectrum Method

The response spectrum method consists of either uniform support motion (USM) or independent support motion (ISM) technique. To account for the uncertainty in the seismic response spectrum, either the peak broadening method or the peak shifting method is used for the design and analysis of piping systems.

3.12.3.2.1 Peak Broadening Method

The peak broadened ISRS are generated according to RG 1.122, Rev. 1 (Reference 3.12-9).

The design ISRS are peak broadened by a minimum of ±15%.

3.12.3.2.2 Peak Shifting Method

Peak broadening may become an overly conservative method in piping design. As an alternative, peak shifting may be considered. Peak shifting considers a minimum of ±15% uncertainty in the peak structural frequencies.

The method is applied as follows:

- The natural frequencies $(f_e)_n$ of the piping system to be qualified in the broad range of the maximum spectrum acceleration peak are determined. If no piping system frequencies exist in the ±15% interval associated with the maximum spectrum acceleration peak, then the interval associated with the next highest spectrum acceleration peak is selected and used in the following procedure:

Considering all N natural frequencies in the interval

$$f_j - 0.15\, f_j \le (f_e)_n \le f_j + 0.15\, f_j$$

where

f_j = the frequency of maximum acceleration in the un-broadened spectra

n = 1 to N

the system is evaluated by performing N + 3 separate analyses using the un-broadened floor design response spectrum and the un-broadened spectrum modified by shifting the frequencies associated with each of the spectral values by a factor + 0.15; -0.15 and

$$[(f_e)_n - f_j]/f_j$$

where

n = 1 to N

The solutions from these separate analyses are then enveloped to obtain the final solution results (displacement, force, moment, support loads, etc.). If three different floor response spectrum curves are used to define the response in the two mutually perpendicular horizontal and the vertical directions, then the shifting of the spectral values, as defined in the preceding discussion, are applied to these three spectrum curves.

3.12.3.2.3 Uniform Support Motion

Piping systems supported by structures located at multiple elevations within one or more buildings may be analyzed using USM.

This analysis method applies a single set of spectra at all support locations, which envelopes all of the individual response spectra for these locations. The enveloped response spectrum is developed and applied in the two mutually perpendicular horizontal directions and the vertical direction.

The modal and spatial responses are then combined as discussed in Subsections 3.12.3.2.4, and 3.12.3.2.5, respectively.

Floor response spectrum curves used for USM may be generated using damping values identified in the Table 3 or the frequency-dependent damping values of Figure 1 from RG 1.61, Rev. 1 (Reference 3.12-10).

3.12.3.2.4 Modal Combination

Guidance on combining the individual modal results due to each response spectrum in a dynamic analysis is provided in RG 1.92, Rev.1 (Reference 3.12-11).

Low frequency (non-rigid) modes: For piping systems with no closely spaced modes, the SRSS method is applied to obtain the representative maximum response of each element, for each direction of excitation as delineated in Regulatory Position C1.1 of RG 1.92, Rev. 1 (Reference 3.12-11). A 10% grouping method is used for combining the responses of closely spaced modes as delineated in Regulatory Position C1.1 of RG 1.92, Rev. 1 (Reference 3.12-11). The response of low frequency (non-rigid) modes is obtained from all the low frequency modes with frequencies at least up to ZPA cutoff frequency.

High frequency (rigid) modes: Piping system modes with frequencies greater than the ZPA cutoff frequency are considered as high frequency or rigid range modes. The response from high frequency modes must be included in the response of the piping system. The guidance for including the missing mass effects is provided in SRP 3.7.2 (Reference 3.12-12), as well as in RG 1.92, Rev. 2 (Reference 3.12-13).

The PIPESTRESS computer program is used for analyzing most of the piping systems. This program uses the left-out-force (LOF) method in order to calculate the effect of the high frequency rigid modes. The LOF method is described in the “PIPESTRESS Theory Manual” (Reference 3.12-14) and the “Outline of Dynamic Analysis for Piping Systems” (Reference 3.12-15).

3.12.3.2.5 Directional Combination

The responses due to each of the three spatial input components of motion are combined using the SRSS method as provided in Regulatory Position C2.1 of RG 1.92, Rev. 1 (Reference 3.12-11).

3.12.3.2.6 Seismic Anchor Motions

The analysis of seismic anchor motions (SAMs) is a static analysis and is performed using the same piping model used to analyze the inertial effects in a dynamic analysis.

When piping is analyzed using the USM method, effects of SAM in each of the three different spatial directions are analyzed separately considering all dynamic supports to be active. The three resulting solutions are combined by the SRSS rule to obtain cumulative effect of support displacements.

For piping supported by a single concrete building, the SAM at all elevations above the foundation basemat are considered to be out of phase unless justification is provided to

show them to be in phase, or unless analyzed using the USM method or the ISM method. Support movements relative to the foundation basemat are used in the analysis.

When supports are attached to different structures (within a building), the relative phasing characteristics retained from the building seismic analysis are used in the piping analysis considering the maximum relative movements between various supports to be out of phase, unless otherwise justified.

Alternatively, data can be used based on the building seismic analysis modes having significant seismic movements. For each building mode, the movements of support attachment locations are tabulated. Using those tabulated movements for each mode and each spatial direction, separate static analyses are performed. Intermodal combinations followed by interspatial combinations are performed using the SRSS rule to obtain the cumulative effect of support displacements.

Where supports are located within different structures or buildings on different foundation mats, the seismic motions at these locations are assumed to move 180 degrees out-of-phase in the most unfavorable combination.

The results of USM floor response spectra analysis and the SAM analysis are combined by absolute summation method for use in various load combinations in the design and/or analysis of pipe supports and piping.

When piping is analyzed using the ISM method, the methodology of Volume 4, Section 2, paragraph 2.4 of NUREG-1061 (Reference 3.12-40) is used. In this method, the analysis is performed assuming that when one group of supports is moving, the other groups of supports are at rest. For each spatial direction, responses from movement of each group are combined by the absolute summation method. The combination of interspatial responses is performed by the SRSS rule to obtain the cumulative effect of support displacements. The results of ISM floor response spectra analysis and SAM analysis are combined by the SRSS rule for use in various load combinations in the design and/or analysis pipe supports and piping.

When the one piping system is supported by different buildings, the part of piping supported by one building is treated as one group including the piping portion supported by different floors in the building.

The relative displacements between groups are assumed to move 180 degrees out-of-phase as specified in NUREG-1061 (Reference 3.12-40).

3.12.3.3 Response Spectra Method (or Independent Support Motion Method)

ISM may be used when piping systems are supported by multiple support structures or at multiple levels within a structure.

The supports are divided into support groups. Each support group is made up of supports that have similar time-history input. Each support group is considered to be in a random-phase relationship to the other support groups. The responses caused by each support group are combined by the absolute summation method. The modal and directional

responses are then combined as discussed in Section 2 of NUREG-1061, Volume 4 (Reference 3.12-40).

Floor response spectrum curves used for ISM are generated using damping values identified in the Table 3 of RG 1.61, Rev. 1 (Reference 3.12-10).

3.12.3.4 Time-History Method

Seismic analysis of piping systems is not performed using the time-history method.

The time-history method may be used to evaluate the effects on piping due to hydrodynamic loads caused by water/steam hammer, relief/safety valve discharge thrust, or any other dynamic loading associated with fluid flow transients. The time- history analysis may be performed using modal superposition method or the direct integration method.

3.12.3.5 Inelastic Analyses Methods

Inelastic analyses methods are not used to qualify piping for the US-APWR design.

3.12.3.6 Small-Bore Piping Method

Class 1 piping 1 inch nominal pipe size (NPS) and smaller, and Class 2 and 3 piping 2 inch NPS and smaller are considered as small bore piping.

For small-bore piping, either the equivalent static load method or the modal response spectrum method are used. The modal response spectrum method was described in the preceding paragraphs.

The equivalent static load method is consistent with the guidelines of SRP 3.9.2.II.2.A (ii) (Reference 3.12-16). In this simplified analysis, the mass of piping, its contents, and any in-line equipment are considered as lumped masses at respective centers of gravity. Static forces are determined by multiplying the contributing mass by a seismic acceleration (G factor) at each location. Static analysis is performed using the static forces applied at those mass locations. Considering that the piping systems are multiple degree of freedom systems and have a significant number of frequencies in the amplified region of the response spectrum curve, the seismic acceleration used as a G factor equals 1.5 times the peak acceleration of the enveloped floor response spectrum. This static force analysis is performed for all three spatial directions of seismic excitation. The solutions from these static analyses are combined by the SRSS method.

Alternatively, a handbook using the above methods for simplified design of small bore piping may be developed.

3.12.3.7 Non-seismic/Seismic Interaction (II/I)

In the design of the US-APWR, the primary method of protection for seismic category I piping is its isolation from piping that is not required to be designed to seismic category I requirements.

In cases where it is not possible or practical to isolate the seismic category I piping, adjacent non-seismic piping is classified as seismic category II and analyzed and supported such that an SSE event does not cause an unacceptable interaction with the seismic category I piping.

The displacements due to the seismic loading on seismic category II piping are reviewed for interaction with seismic category I piping and components, and interacting supports between seismic category I and seismic category II piping are designed for SSE loadings. If necessary, seismic category II portion of the piping is analyzed to the same design criteria as the seismic category I piping.

For piping systems that includes an interface between seismic category I and non-seismic category I portions, the seismic category I dynamic analysis is up to and includes the first anchor point in the non-seismic system. Anchor points are defined as the extremities of piping runs that connect to structures, components (e.g., vessels, pumps) or pipe anchors that act as rigid constraints relative to piping motion and thermal expansions.

3.12.3.8 Seismic Category I Buried Piping

In the design of US-APWR, there are no seismic category I buried piping systems.

3.12.4 Piping Modeling Technique

3.12.4.1 Computer Codes

The following computer programs are used in the analysis of safety-related piping systems. For pipe stress analyses and pipe support design, if a program is used that is not listed below, then program validations, including piping benchmark problems of NUREG/CR-1677, Volumes 1 and 2 (Reference 3.12-17) are to be performed.

3.12.4.1.1 List of Programs

- PIPESTRESS

  PIPESTRESS (Reference 3.12-18) is a computer program for the analysis of piping systems.

  This program is used for the analysis of ASME Code, Section III, Class 1, 2, 3 (Reference 3.12-2) and ASME B31.1 (Reference 3.12-1) piping systems under various load conditions.

  Static analysis includes deadweight, thermal expansion, internal pressure, applied forces, and moments of displacements.

  Dynamic analysis includes response spectra analysis and time-history analysis.

- Abaqus

  Abaqus (Reference 3.12-19) is a general-purpose computer program for structural analysis.

This program is used for temperature distribution analysis and thermal stress analysis according to piping geometries and design transients such as fluid temperature, coefficient of heat transfer, and flow rate.

- ANSYS

  ANSYS (Reference 3.12-20) is a general purpose finite element structural analysis computer program.

- RELAP-5

  RELAP-5 (Reference 3.12-21) is a computer program for the fluid transient analysis.

  This program is used for the analysis of a behavior, such as water hammer, safety/relief valve discharge etc. by modeling flow volume and flow path.

  The pressure and flow rate time-history can be obtained.

- E/PD STRUDL

  E/PD STRUDL (Reference 3.12-22) is a computer program that has the capability to perform coupled structural analysis of piping and pipe supports in compliance with ASME Code, Section III, and AISC Codes (Reference 3.12-23), as envisioned in Section 3.12.3.

  This program is used for the analysis of ASME Code, Section III, Class 2 and 3 (Reference 3.12-2) and ASME B31.1 (Reference 3.12-1) piping systems under various load conditions.

  Static analysis includes deadweight, thermal expansion, internal pressure, applied forces, and moments of displacements.

  Dynamic analysis includes response spectra analysis and time-history analysis.

  This computer program is designed to perform analysis of the pipe support structure, including the base plate flexibility per NRC IE Bulletin 79-02 (Reference 3.12 24) as applicable and perform a code stress check of the various components of the support assembly (e.g., structural stock items, welds, anchor bolts, and support vendor components based on data used from vendor's catalog values per vendor's certified design reports).

- STAAD.Pro

  STAAD.Pro (Reference 3.12-44) is a general purpose structural analysis program. The program is used for steel stress analysis of piping supports.

- P4TEDIA

P4TEDIA is a computer program to calculate ΔT1, ΔT2, Ta and Tb (defined in ASME Code Section III, Subsection NB Class 1 piping) from the temperature distribution analysis results generated by ABAQUS

- P2DLOP

  P2DLOP is a computer program to convert time histories of parameters generated by RELAP5-3D such as pressure, temperature and flow rate into force time histories for piping structural analysis.

- CEFF-N

  CEFF-N is a computer program for the Class 1 piping fatigue analysis in LWR environment. This program calculates the cumulative usage factor in LWR environment using the fatigue analysis result in air and time histories of ΔT1, Ta and Tb. These results are generated by PIPESTRESS and P4TEDIA, respectively.

- MCPEVALPRI

  MCPEVALPRI is a computer program for calculating temperature data (ΔT1, ΔT2, Ta, Tb) from the ABAQUS heat transfer analysis result in accordance with ASME Code Section III NB-3653.

- MCPEVALSI

  MCPEVALSI is a computer program for calculating stress and usage factors in accordance with ASME Code Section III NB-3650.

- MCPFEM

  MCPFEM is a computer program for performing mesh division for the ABAQUS input files.

- US-CHERRY

  US-CHERRY is a computer program for developing floor response spectra.

3.12.4.1.2 Program Validations

Verification tests are to demonstrate the capability of the computer program to produce valid results for test problems encompassing the range of permitted usage defined by the program documentation. Subsection 3.9.1.2 describes the various methods used for computer program validations.

3.12.4.2 Dynamic Piping Model

For dynamic analysis, the piping system is idealized as a three dimensional space frame. The analysis model consists of a sequence of nodes connected by straight pipe elements

and curved pipe elements with stiffness properties representing the piping, and other in-line components.

Piping restraints and supports are idealized as zero length springs with appropriate stiffness values for the restrained degrees of freedom.

In the dynamic mathematical model, the distributed mass of the system, including pipe, contents, and insulation weight, is represented as lumped masses located at each node, which is designated as a mass point.

The minimum number of degrees of freedom in the model is to be equal to twice the number of modes with frequencies below a pre-selected cut-off-frequency.

The following formula is used to determine the spacing between two successive mass points so that the distance between mass points is less than or equal to one half of the span length for the simply supported beam with a preselected cut-off-frequency. The PIPESTRESS program uses this formula for mass point spacing.

$$L \leq \frac{1}{2}\sqrt{\left[\frac{K}{F_R}\right]\sqrt{\frac{EI}{W}}}$$

where

K = 0.743

L = Mass point spacing (ft)

F_R = Cut-off frequency (Hz)

E = Modulus of elasticity of pipe material (psi)

I = Moment of inertia of pipe cross-section (in^4)

W = Mass per unit length of piping + insulation + contents (lbm/ft)

Concentrated weights of in-line components, such as valves, flanges, and instrumentation, are also modeled as lumped masses.

Torsional effects of eccentric masses are included in the analysis.

The mass contributed by the support is included in the analysis when it is greater than 10% of the total mass of the adjacent pipe span (including pipe, contents, insulation, and concentrated masses).

3.12.4.3 Piping Benchmark Program

Piping benchmark problems included in NUREG/CR-1677, Vol. 1 and 2 (Reference 3.12-17) are used to validate the PIPESTRESS computer code used in piping stress

analysis. In addition, three piping benchmark problems from NUREG/CR-6414 (Reference 3.12-25) are also used to validate the PIPESTRESS computer code.

3.12.4.4 Decoupling Criteria

Branch lines and instrument connections may be decoupled from the analysis model of a larger run of piping provided that either the ratio of the branch pipe mean diameter to the pipe run mean diameter (D_b/D_r) is less than or equal to 1/3, or the ratio of the moments of inertia of the two lines (I_b/I_r) is less than or equal to 1/25.

In addition to the size limitations, the decoupled branch line must be sufficiently flexible to facilitate the thermal expansion and seismic movements of the pipe run without constraint. As such, restraints on the branch line should not be located close to the actual pipe run connection.

Seismic analysis of the decoupled branch line is performed using applicable envelope response spectra for the decoupled branch line considering the connection point as an anchor. The envelope response spectra also include amplified response spectra at the connection point to the supporting piping run as a component response spectra. The movements (displacements and rotations) of the pipe run from the thermal, SAM or pipe break analyses is applied as anchor movements with their respective load cases in the decoupled branch line analysis.

The pipe run seismic analysis is performed without the decoupled branch. However, the mass effect is considered when the mass of half the span of the branch pipe is greater than 10% of the mass of the pipe run span.

In the analysis of the pipe run, as well as the decoupled branch pipe, the effects of the applicable stress intensification factors and/or stress indices of the branch connection are incorporated.

If amplified response spectra at the connection point can not be developed, then the model of the branch pipe is included in the analysis model of the run pipe. The portion of the branch pipe included in the analysis ends at either (a) the first anchor (including equipment nozzle or containment penetration) or (b) four seismic supports in each of the three perpendicular directions. In case of option (b), overlapping method of USNRC NUREG/CR-1980 (Reference 3.12-41) is used.

3.12.5 Piping Stress Analysis Criteria

3.12.5.1 Seismic Input Envelope vs. Site-Specific Spectra

The development of floor response spectra for the US-APWR design is described in Subsection 3.7.2.5, “Development of Floor Response Spectra”.

If any piping is routed in tunnels or trenches in the yard, the COL Applicant is to generate site-specific seismic response spectra, which may be used for the design of these piping systems.

3.12.5.2 Design Transients

ASME Code, Section III, Class 1 (Reference 3.12-2) piping system and support component experience the RCS transients identified in Table 3.9-1. On the other hand, Class 1 piping experiences the specific transient caused by the flow injection or discharge through this piping. These transient are listed in Table 3.12-6.

3.12.5.3 Loadings and Load Combination

3.12.5.3.1 Pressure

The internal design pressure, P, is used in the design and analysis of ASME Code, Section III, Class 1, 2 and 3 piping (Reference 3.12-2). The wall thicknesses are determined using the formulations of NB/NC/ND-3640 and the design pressure, P. Table 3.12-1 provides the definition of terms associated with Tables 3.12-2, 3.12-3 and 3.12-4. The applicable design and maximum service level pressures are used in load combinations as identified in Tables 3.12-2 and 3.12-3.

3.12.5.3.2 Sustained Loads

The weight of the piping system, its contents, any insulation and in-line equipment, and any other sustained loads identified in the design specification are considered in the piping analysis. The weight of water during hydrostatic testing is considered for piping systems carrying process fluids other than water.

3.12.5.3.3 Thermal Expansion

The effect of linear thermal expansion range during various operating modes is considered along with thermal movements of terminal equipment nozzles, anchors, or restraints (thermal anchor movements) corresponding to the operating modes. The stress free temperature is taken as 70°F. The piping systems operating at a temperature of 150°F and below are not analyzed for the effects of linear thermal expansion. However, if the piping system does not contain at least one 90-degree bend, then thermal expansion analysis is needed. Such straight pipe layout without at least one 90-degree bend is avoided when practical.

Thermal movements less than or equal to 1/16th inch may be excluded from analysis as this represents the power industry practice of allowing 1/16th inch gap or clearance all around the pipe in pipe supports.

3.12.5.3.4 Earthquake Loads

As required by GDC-2, the main earthquake load used in the US-APWR design is defined in Section 3.7.

The effects of inertial loads and anchor movements due to SSE are considered as Service Level D loads in the design of piping and piping supports. Fatigue effects due to earthquake loads are discussed in Subsection 3.12.5.7. Tables 3.12-2, 3.12-3, and 3.12-4 identify SSE inertial and displacement loads in various load combinations for

ASME Code, Section III (Reference 3.12-2), Class 1, 2, and 3 piping, and piping supports.

3.12.5.3.5 Fluid Transient Loads

The relief/safety valve thrust loads, for open or closed systems, are functions of valve opening, flow rate, flow area, and fluid properties. Either a dynamic analysis or a static analysis using a dynamic load factor is performed to analyze such effects. The safety/relief valve thrust loads are considered in Level B, C, or D service load combinations.

The water hammer phenomenon is set in motion by the rapid actuation of valves or the sudden start or trip of a pump or turbine. Fluid hammer is analyzed using dynamic analysis methods. The water hammer loads are considered in Level B, C, or D service load combinations.

3.12.5.3.6 Wind/Tornado or Hurricane Loads

If the COL Applicant finds it necessary to lay ASME Code, Section III (Reference 3.12-2), Class 2 or 3 piping exposed to wind, tornado or hurricane loads, then such piping must be designed to the plant design basis loads.

3.12.5.3.7 Design Basis Pipe Break Loads

High-energy line breaks cause loads in the form of pipe whip, jet impingement, and changes in environmental conditions. Design basis pipe break (DBPB) loads include the impact of the RCPB piping break, main steam and feedwater line breaks excepting the piping break which meets the LBB criteria (see Subsection 3.6.3) or inside the pipe break exclusion area. DBPB loads are considered in Level D service load combinations.

3.12.5.3.8 Thermal and Pressure Transient Loads

Temperature variations in ASME Code, Section III, Class 1 (Reference 3.12-2) piping are analyzed to consider the effect of the temperature gradient across the pipe wall, and the resulting stress intensities are included in the stress equations and fatigue evaluation.

3.12.5.3.9 Hydrostatic Pressure Tests

Hydrostatic pressure tests are performed on piping systems at pressures specified in the design specification. Piping systems that normally carry operating fluids, such as steam or gas, must have “pins” placed in variable support spring hangers, constant support hangers, and temporary supports added, as needed. The effect of the test pressure and fluid weight are considered in satisfying the appropriate ASME Code, Section III, Class 1, 2, and 3 (Reference 3.12-2) stress equations. The effects of hydrostatic pressure tests on ASME Code, Section III, Class 1 piping fatigue are in accordance with NB-3226.

3.12.5.3.10 Load Combinations

Using the ASME Code, Section III, NB/NC/ND-3650 (Reference 3.12-2) stress equations, piping system stresses is calculated for various load combinations in Tables 3.12-2 and 3.12-3.

3.12.5.4 Damping Values

The damping values used in the seismic analysis of the piping systems is dependent upon the method of seismic analysis used.

The damping value used for the SSE is 4%, which is consistent with Table 3 of the RG 1.61, Rev. 1 (Reference 3.12-10).

The frequency-dependent damping values of Figure 1 of the RG 1.61, Rev. 1 (Reference 3.12-10), are used only for the USM technique.

3.12.5.5 Combination of Modal Responses

For piping systems with no closely spaced modes, the SRSS method is applied to obtain the representative maximum response of each element, for each direction of excitation as delineated in Regulatory Position C1.1 of RG 1.92, Rev. 1 (Reference 3.12-11). A 10% grouping method is used for combining the responses of closely spaced modes as delineated in Regulatory Position C1.2.1 of RG 1.92, Rev. 1 (Reference 3.12-11).

3.12.5.6 High-Frequency Modes

The PIPESTRESS computer program is used for analyzing most of the piping systems. This program uses the LOF method to calculate the effect of the high frequency rigid modes (References 3.12-14 and 3.12-15). The results obtained are treated as an additional modal result from a non-closely spaced last mode, and are combined with other modal responses by the methods described in Subsection 3.12.5.5.

Site-specific high frequency exceedances of piping systems that are not sensitive to high frequency exceedances in the 25 Hz to 50 Hz range are acceptable as described in Section 3.7. The COL Applicant is to screen piping systems that are sensitive to high frequency modes for further evaluation.

3.12.5.7 Fatigue Evaluation of ASME Code Class 1 Piping

ASME Code, Section III, Class 1 (Reference 3.12-2) piping is evaluated for the effects of fatigue caused by various thermal and pressure transients and other cyclic events including earthquakes and thermal stratification. The criteria described in ASME Code, Section III, Class 1, Subsection NB-3653 (Reference 3.12-2) are used for all piping greater than 1 inch NPS designated as ASME Code, Section III, Class 1. One inch NPS and smaller Class 1 piping is analyzed by the rules of Subsection NC.

The environmental impact on fatigue of ASME Code, Section III (Reference 3.12-2), Class 1 piping follow the requirements delineated in RG 1.207, Rev. 0 (Reference 3.12-26).

3.12.5.8 Fatigue Evaluation of ASME Code Class 2 and 3 Piping

ASME Code, Section III (Reference 3.12-2), Class 2 and 3 piping are not explicitly analyzed for calculation of cumulative usage factors in a manner similar to the ASME Code, Section III, Class 1 piping. ASME Code, Section III, Class 2 and 3 piping are evaluated following the requirements of NC/ND-3611.2 (Reference 3.12-2), which allows

the reduction of allowable stress for thermal expansion stress ranges calculated using the requirements of NC/ND-3653.2(a) by stress range reduction factor (*f*) of Table NC/ND-3611.2(e)-1. The stress intensification factors used in the Class 2 and 3 Code Equations 10 and 11 for various piping products and components are based on fatigue testing. As such, they indirectly account for fatigue. The environmental impact on fatigue of Class 2 and 3 piping follows guidelines established by the NRC at the time of actual analysis.

3.12.5.9 Thermal Oscillations in Piping Connected to the Reactor Coolant System

As determined by NRC Bulletin 88-08 including Supplement 3 (Reference 3.12-27), the RCS is reviewed to identify places potentially affected by thermal stresses caused by thermal stratification or thermal oscillation.

Thermal stratification and oscillation has been evaluated relative to the design of the US-APWR. It has been found that no problem would occur due to the thermal stresses caused by thermal stratification or temperature changes in the closed branch piping, connected to RCS. The following US-APWR design approach to address valve leakage is provided as assurance against thermal stratification and thermal oscillation (see Table3.12-7).

The normally stagnant branch lines attached to the RCS piping (up-horizontal/horizontal) with a potential for in-leakage from a high-pressure source toward the RCS piping such as out-of-service charging line and auxiliary pressurizer spray line. For the former, no out-of-service charging line exists in US-APWR, therefore, there are no concerns for thermal stratification and thermal oscillation. For the latter, the velocities in the main spray lines are not sufficient to product thermal fatigue cycling due to insufficient swirl penetration into the auxiliary spray line. Also, the temperature difference between spray line flow and valve seat leakage flow is small. Therefore, the auxiliary spray line can be screened out for normal operating conditions.

In the case of a gate valve configuration, high-cycle fatigue could be caused by repeated leaks from the valve gland. Leaks would occur even when double isolation valves are installed in series. By permitting continuous leakage through the valve gland packing by valve disk position adjustment, valve disk expansion and contraction cycle is prevented and cyclic fatigue failure caused by thermal stratification or thermal oscillation is eliminated (see Table 3.12-8).

Furthermore, high temperature water that flows from the RCS pipe run into the closed stagnant down-horizontal branch pipes occurs as swirling water, referred to as cavity flow induced by the high temperature pipe. In addition, there is a phenomenon in which stratification occurs at the surface boundary between the high temperature water entering the branch pipe and the low temperature water already in the branch. When the stratified surface boundary (top of cavity flow) occurs at pipe bend(s) or elbow(s) which directs flow horizontally from vertical and downward risers, there is a possibility of significant thermal fluctuation inducing high cycle thermal fatigue at this point. Therefore, the piping is routed such that a stratified surface boundary does not occur at pipe bend(s) or elbow(s) which directs flow horizontally from vertical and downward risers as predicted in the JSME guidelines (Reference 3.12-43).

a. The length of the vertical line between the Reactor Coolant Loop (run pipe) and the horizontal pipe should be longer than the predicted penetration depth (maximum) of the cavity flow. In this case, the surface boundary becomes stagnant in the vertical pipe and therefore significant thermal cycling does not occur.

b. The length of the vertical pipe between the Reactor Coolant Loop (run pipe) and the horizontal pipe should be shorter than the predicted penetration depth (minimum) of the cavity flow. In this case, the cavity flow at a temperature equal to the water temperature in the run pipe keeps the water temperate in the horizontal pipe high and therefore significant thermal cycling does not occur.

3.12.5.10 Thermal Stratification

NRC Bulletin 79-13 (Reference 3.12-28) addresses the effect of thermal stratification that lead to the cracking of the feedwater line at D.C., Cook Nuclear Plant Unit 2.

Provisions of the thermal stratification of the feedwater nozzle are described in Subsection 5.4.2.1.2.12.

NRC Bulletin 88-11 (Reference 3.12-29) was issued after Portland General Electric Company experienced difficulties in setting whip restraint gap sizes on the pressurizer surge line at the Trojan plant.

At the horizontal portion of the pressurizer surge line, thermal stratification is expected to occur if the surge flow velocity is low, and to disappear if the velocity is high. At normal operation, a low flow-rate out-surge flow in the line connecting the pressurizer to the hot leg may occur due to a continuous spray, which could lead to a thermal stratification in the cross section of pressurizer surge line in accordance with the temperature difference between pressurizer and hot leg. When a high-flow rate out-surge flow or in-surge flow occurs during transient events, this thermal stratification disappears. The low flow-rate out-surge flow is recovered as soon as out-surge or in-surge ends, thus, reproducing the thermal stratification.

Structural integrity of the pressurizer surge line of the US-APWR plant is to be assured by performing the following activities for the first US-APWR plant.

1. Fatigue evaluation is to be performed by considering the repeated event of thermal stratification occurring in the pressurizer surge line. It will be confirmed by analysis and hot functional test that thermal deflections of piping do not result in adverse consequences.

   If the fatigue evaluation results comply with the ASME Code Section III, items 2 through 4 will not be performed in subsequent US-APWR plants which have the same plant heatup and cooldown procedures as the first US-APWR plant heatup and cooldown procedures.

2. Plant heatup and cooldown are the most severe conditions for thermal stratifications of the pressurizer surge line due to developing the largest difference

of temperature between hot leg and pressurizer, which are to be considered for mitigation of thermal stratification in the US-APWR.

3. The temperature of the surge line is to be monitored for the effects of thermal stratification at heatup and cooldown during hot functional testing.

4. Monitoring results are to be included in stress and fatigue analysis to ensure ASME Code Section III compliance.

The temperature difference between the pressurizer fluid temperature and the RCL hot leg temperature at the two ends of the pressurizer surge line during Plant Heatup and Cooldown is not permitted to exceed 145°F. This value conservatively limits the potential for detrimental thermal stratification within the surge line and assures acceptable fatigue results for the design life of the plant. The measured thermal stratification temperatures from the HFT surge line performance test (described in DCD Section 14.2.12.1.119) will be compared with the values used in the design analysis to confirm the design margins. The monitoring will be continued during the first cycle operation of the first US-APWR plant. The COL applicant addresses the applicability of the monitoring of the first cycle operation.

3.12.5.11 Safety Relief Valve Design, Installation, and Testing

The requirements of “Rules for the Design of Safety Valve Installations”, ASME Code, Appendix O (Reference 3.12-30) are followed in the design and installation of safety valves and relief valves for overpressure protection.

Discharge forces of safety or relief valves using open vent stacks to discharge directly to the atmosphere are normally calculated using static methods and a conservative dynamic load factor. While performing stress analysis, these discharge forces are applied to evaluate stresses and restraint/support design loads using static equivalent force analysis methods.

Discharge forces of safety or relief valves using piped discharges to vessels or headers are not considered as steady state forces, but are analyzed as forces acting at changes in directions (elbows and branch connections) during the initial discharge phase. A static equivalent force analysis or a time-history dynamic force analysis are performed on the piping system to evaluate resulting stresses and support/restraint design loads. See Subsection 3.12.4.1.1 for the computer program used in the analysis (Reference 3.12.21).

If several relief or safety valves are placed on a common header, the most adverse sequence of valve discharges are used to calculate piping stresses and support/restraint design loads.

3.12.5.12 Functional Capability

The functional capability requirements for ASME piping systems that must maintain an adequate fluid flow path to mitigate a Level C or D service conditions are shown in Table 3.12-5. These requirements are based on NUREG-1367 (Reference 3.12-31).

3.12.5.13 Combination of Inertial and Seismic Anchor Motion Effects

The inertial effects and anchor movement effects due to an earthquake are analyzed separately. The results from these two separate analyses are combined by the absolute summation method for support design loads and for the fatigue analysis of ASME Code, Section III, Class 1 (Reference 3.12-2) piping systems.

3.12.5.14 Operating-Basis Earthquake as a Design Load

For US-APWR piping design, the main earthquake load used is defined in Section 3.7.

By virtue of the design criteria used for piping components and supports, this design basis criterion assures that SSE controls the seismic design of systems and components.

3.12.5.15 Welded Attachments

Where integral welded attachments to piping are used in restraint design, ASME Code Cases identified in Subsection 3.12.2.2 are used. For attachments that are outside the range of parameters of the above method, WRC Bulletin No. 107, Aug. 1965, revised in March 1979, is used when applicable. For cases where the above methods are not applicable, a Finite Element Analysis (FEA) will be used.

3.12.5.16 Modal Damping for Composite Structures

Modal damping for composite structures is described in Subsection 3.7.3.3.

3.12.5.17 Minimum Temperature for Thermal Analyses

The stress-free state of a piping system is defined as the state of the piping at a temperature of 70°F.

Piping systems subjected to operating temperatures greater than 150° F are analyzed for the effects due to thermal expansion.

3.12.5.18 Intersystem Loss-of-Coolant Accident

Piping systems designed to operate under low pressure conditions may come to interface with the RCPB. For such piping systems, the minimum wall thickness is calculated per the requirements of NB-3640 (Reference 3.12-2), and stress analysis is performed in accordance with NB/NC/ND-3650 (Reference 3.12-2) equations using the appropriate RCPB pressure.

3.12.5.19 Effects of Environment on Fatigue Design

As discussed in Subsection 3.12.5.7, the environmental impact on fatigue on ASME Code, Section III, Class 1 (Reference 3.12-2) piping follow the requirements delineated in RG 1.207 (Reference 3.12-26).

3.12.6 Piping Support Design Criteria

3.12.6.1 Applicable Codes

Seismic category I pipe supports are designed in accordance with subsection NF of the ASME Code, Section III, 2001 Edition including 2003 Addenda (Reference 3.12-32) for Level A, B, C, and D service conditions, however the acceptable stress limits permitted by the nonmandatory Appendix F of Section III of the ASME Code, 2001 Edition including 2003 Addenda (Reference 3.12-33) are utilized for Service Level D supports.

ASME Code, Section III, Subsection NF (Reference 3.12-32) details varying requirements of ASME Code, Section III, Class 1, 2, and 3 support structures, that is further classified into plate and shell type supports, linear type supports, and standard piping products. The welding requirements for A500, grade tube steel from AWS D1.1 (Reference 3.12-34) are utilized.

The construction of ASME Code, Section III, Class 1 (Reference 3.12-32) linear-type piping supports (excluding snubbers) follow the rules of ASME Code, Section III, Subsection NF as supplemented by the stipulations of Section C., Regulatory Position of RG 1.124, Rev. 2 (Reference 3.12-35).

The construction of ASME Code, Section III, Class 1 plate-and-shell-type piping supports (excluding snubbers) follow the rules of ASME Code, Section III, Subsection NF (Reference 3.12-32) as supplemented by the stipulations of Section C., Regulatory Position of RG 1.130, Rev. 2 (Reference 3.12-36).

Seismic category II piping supports are also designed per the requirements of ASME Code, Section III, Subsection NF (Reference 3.12-32).

Non-seismic category piping supports are designed in accordance with the requirements of ASME/ANSI B31.1 Power Piping Code (Reference 3.12-1), Paragraph 120 for loads on pipe supporting elements and Paragraph 121 for design of pipe supporting elements. Pipe support supplementary steel are designed using the guidelines in the “Manual of Steel Construction, 9th Edition”, AISC (Reference 3.12-23). However, material properties from later editions may be used as necessary.

Expansion anchors and other steel embedments in concrete are designed for concrete strength in accordance with “Code Requirements for Nuclear Safety Related Concrete Structures”, ACI 349 (Reference 3.12-37).

Pipe support catalog items, which are fabricated/manufactured to later code editions than identified in the above paragraphs, may be used on a site-specific basis. This use of the later codes shall be reconciled to the code of record identified in the above paragraphs.

3.12.6.2 Jurisdictional Boundaries

3.12.6.2.1 Pipe Supports and Attachment Points

The jurisdictional boundary between a pipe and its support structure follows the guidance of ASME Code, Section III, Subsections NB-1132, NC-1132, or ND-1132 (Reference 3.12-2).

For piping analyzed per the requirements of ASME B31.1 (Reference 3.12-1), the jurisdictional boundary guidance of ASME Code, Section III, Subsection ND-1132 is followed.

3.12.6.2.2 Subsection NF Boundaries

The jurisdictional boundary between the pipe support and the building structure follow the guidance of Subsection NF-1130 of the ASME Code, Section III (Reference 3.12-32)

3.12.6.3 Loads and Load Combinations

The load combinations for the piping support design are defined based on the four Level A, B, C, and D service conditions. The load combinations used for all four levels always includes the effects of thermal expansion and sustained loads for all conditions. The combination of loads imposed by thermal expansion and other loading such as weight may be less than the individual loading imposed by weight alone, as the summation is algebraic. In such a case, the cold condition as an installed condition where weight alone is the load acting on the system is also considered for support loads.

The following subsections provide a description of the various loads considered in the design load combinations. Table 3.12-4 provides the load combinations used in the design of the pipe supports.

3.12.6.3.1 Dead Weight Loads

The loads are based on the dead weight loading case of the associated piping stress analysis and generally include the weight of the piping system and its contents, and any pipe support components attached directly to the pipe (e.g., clamps or integral attachments). In addition, the dead weight of the support components is considered. In Table 3.12-4, dead weight loads are designated by *DL*.

3.12.6.3.2 Thermal Expansion Loads

Piping analysis may include several thermal expansion loading cases associated with the four service levels. Support loads from these loading conditions are designated as TH_{MTL}, TH_E and TH_F corresponding to the appropriate Level A, B, C, and D service conditions.

3.12.6.3.3 Friction Loads

Friction loads are the result of movement of the pipe across the surface of a support member. Such loads are manually calculated. In Table 3.12-4, friction loads are designated by *F*.

3.12.6.3.4 Severe Wind Loads

Piping exposed to the environment (e.g., yard piping) may be subjected to wind loads. Such piping is analyzed for severe wind loads. In Table 3.12-4, support loads due to wind are designated by *W*. All safety-related piping systems are located inside wind protected structures; and therefore are not subject to wind loading.

3.12.6.3.5 Tornado and Hurricane Loads

Piping exposed to the environment (e.g., yard piping) may be subjected to tornado and hurricane loads. Such piping is analyzed for bounding effects at building penetrations exposed to design basis tornado and hurricane loads. In Table 3.12-4, support tornado and hurricane loads due to tornado and hurricane are designated by W_T. All safety-related piping systems are located inside tornado/hurricane protected structures; and therefore are not subject to tornado and hurricane loading.

3.12.6.3.6 System Operating Transient Loads

Dynamic loads such as safety/relief valve discharge and water/steam hammer loads are analyzed for piping systems. Support loads from such dynamic analyses are designated as L_{DF} in Table 3.12-4.

3.12.6.3.7 Safe-shutdown Earthquake Loads

Piping is analyzed for both inertial loads and loads due to seismic anchor movements. Piping loads resulting from these loads are designated as safe-shutdown earthquake inertia loads (*SSEI*) and safe-shutdown earthquake anchor loads (*SSEA*) in Table 3.12-4.

3.12.6.3.8 Other Loads

Piping systems are analyzed for other loading conditions such as small pipe break, main steam/feedwater pipe break, and LOCA loads. Pipe support loads from such conditions are designated as *DBPB*.

3.12.6.3.9 Minimum Design Loads

In order to obtain uniformity in the load carrying capability of the supports, minimum design loads for all supports are defined as the largest of the following three loads:

- 100% of the Level A service level load
- The weight of a standard ASME B31.1 span of water filled schedule 80 pipe
- A minimum value of 150 pounds

3.12.6.4 Pipe Support Baseplate and Anchor Bolt Design

While every effort is made to minimize the use of baseplates with expansion anchors, there may be some instances of utilization of baseplate designs. In such cases, an evaluation of concrete is performed using the requirements of ACI 349-06, Appendix D

(Reference 3.12-37) considering the limitations of RG 1.199 (Reference 3.12-38). All aspects of the anchor bolt design, baseplate flexibility and factors of safety are utilized as identified in IE Bulletin 79-02, Rev. 2 (Reference 3.12-24).

3.12.6.5 Use of Energy Absorber and Limit Stops

Energy absorbers and limit stops are not used as piping supports in the US-APWR design.

3.12.6.6 Use of Snubbers

Snubber supports are utilized where free thermal movements are required and restraining movements caused by dynamic loadings is also required. However, care is taken to locate snubbers where the pipe has the required dynamic accelerations/displacements to properly activate the snubber. In general, snubber components are manufactured hardware. Snubbers are either hydraulic or mechanical in operation.

The criteria for locating snubbers and ensuring adequate capacity, the structural and mechanical performance parameters used for snubbers, and the installation and inspection considerations for snubbers is described in detail in Subsection 3.9.3.4.

The use of snubbers is minimized as-much-as-possible due to the maintenance and testing requirements for these components. The accessibility of any snubber utilized is a consideration in the design of the supporting scheme for the piping system. Snubbers are not used where movements due to thermal expansion are in small magnitude.

The main consideration in the design of any snubber is the ability of the snubber to properly activate and restrain movement for a given design load. Care is taken so that the thermal growth does not exceed the snubber lock-up velocity. When parallel snubbers are utilized in the same support restraining direction, care is taken to assure that: (a) fitting clearances are not mismatched between the snubbers to avoid activation of one snubber before the activation of the other(s), and (b) there is no significant difference in stiffness properties among the subject snubbers.

The specification provided to the supplier (manufacturer) contains the following information:

- Applicable codes (e.g., ASME Code, Section III, Subsection NF [Reference 3.12-32]) and standards
- Functional requirements
- Operating environment (normal as well as post-accident)
- Materials to be used in manufacturing/fabrication
- Functional testing and certification

The proper installation and operation of snubbers by the use of visual inspection, operational and installation measurements, and observation of thermal movements during plant startup are to be verified.

3.12.6.7 Pipe Support Stiffness

In the de-coupled piping stress analysis (where support is modeled as a restraint versus the integrated analysis), supports are modeled with either calculated actual stiffness of the support structure, or with an arbitrarily chosen rigid stiffness. In general, rigid support stiffness is used for all ASME Code, Section III, Classes 2 and 3 (Reference 3.12-2), and ASME B31.1 (Reference 3.12-1) piping, with a check on support deflection in the restrained directions to verify the assumed rigidity. The actual stiffness is used for all variable support hangers (springs). For all ASME Code, Section III, Class 1 piping, during the final design fatigue analyses the actual support stiffness is used. If the actual support stiffness is used for any support excluding variable support hangers, the actual stiffness for all supports within the piping analytical problem boundary model is used. Caution is used in the support design to keep the unrestrained direction of the support from having a frequency that would tend to provide significant amplification of the support structure mass.

Two deflection checks are performed for each support modeled as rigid in the piping analysis. The first check compares the deflection in the restrained direction(s) to a maximum of $1/16^{th}$ inch for SSE loadings or the minimum support design loadings of Subsection 3.12.6.3. The second check compares the deflection in the restrained direction(s) to a maximum of $1/8^{th}$ inch for the total deflection (static plus dynamic) for any load case combination. In the development of the support deflections, dynamically flexible building elements beyond the support jurisdictional boundaries are also considered.

3.12.6.8 Seismic Self-Weight Excitation

In the de-coupled piping stress analysis where a support is modeled as a restraint (as against integrated analysis), the response of the support structure to SSE loadings is included in the pipe support analysis. In general, the inertial response of the support structure mass is evaluated. The damping values of RG 1.61, Rev. 1 (Reference 3.12-10) is used in such analysis. The support self weight response to SSE is combined with the piping response to SSE (inertial loads and anchor movements) by absolute summation.

3.12.6.9 Design of Supplementary Steel

Seismic category I and seismic category II piping supports are designed per the rules of ASME Code, Section III, Subsection NF. Any supplemental steel required to connect the piping support structure to the building structure is also designed to the rules of Subsection NF, following the guidance on jurisdictional boundaries.

In the case of non-seismic supports, the rules of “Manual of Steel Construction, 9th Edition”, AISC (Reference 3.12-23) are followed for supplemental steel.

3.12.6.10 Consideration of Friction Forces

Friction forces are developed in a pipe support due to the gradual movement of the pipe across the surface of the support member in the unconstrained directions. As such, friction forces are calculated using the loads due to thermal expansion and deadweight that are normal to the applicable support member.

The friction force is calculated only when the movement in the unrestrained direction due to thermal expansion exceeds 1/16th of an inch. The friction force is calculated using the following formula:

Friction Force (F) = μN

where

μ = coefficient of friction

(0.3 for steel-to-steel)

(0.1 for slide/bearing plates)

N = Total force normal to the pipe movement

The friction force F cannot be greater than the product of the pipe movement and the stiffness of the pipe support in the direction of movement.

3.12.6.11 Pipe Support Gaps and Clearances

All rigid supports have a cold condition gap of 1/16th inch all around the pipe surface in the restrained direction. These small gaps allow the rotation of the pipe and also allow for radial thermal expansion of the pipe. However, in the case of vertical restraints during the cold condition the pipe surface will be in contact with the support in the direction of gravity. 1/8” gap will be maintained above the pipe surface in the vertical upward direction.

In the unrestrained direction, the gaps are greater than the expected maximum movement of the pipe. Stiff pipe clamps, which are preloaded to prevent themselves from lifting off the piping under dynamic loading conditions, are not used for ASME Code, Section III, Class 1 (Reference 3.12-2) piping.

3.12.6.12 Instrumentation Line Support Criteria

The acceptance criteria for instrumentation line supports are from ASME Code, Section III, Subsection NF for seismic category I (Reference 3.12-32) and seismic category II instrumentation lines. Non-seismic instrumentation lines are designed per the rules of “Manual of Steel Construction, 9th Edition”, AISC (Reference 3.12-23).

The applicable loading combinations for these supports are those used for normal and faulted conditions in Table 3.12-4.

3.12.6.13 Pipe Deflection Limit

Manufacturer's recommendations for the limitations in its hardware are followed for those piping supports that utilize standard manufactured components. Such limitations include travel limits for variable and constant support spring hangers, swing angles for rod hangers, struts, and snubbers. The variability check of variable support spring hangers is performed per applicable Codes.

3.12.7 Combined License Information

COL 3.12(1) *Deleted*

COL 3.12(2) *If any piping is routed in tunnels or trenches in the yard, the COL Applicant is to generate site-specific seismic response spectra, which may be used for the design of these piping systems.*

COL 3.12(3) *If the COL Applicant finds it necessary to lay ASME Code, Section III (Reference 3.12-2), Class 2 or 3 piping exposed to wind, tornado or hurricane loads, then such piping must be designed to the plant design basis loads.*

COL 3.12(4) *The COL Applicant is to screen piping systems that are sensitive to high frequency modes for further evaluation.*

COL 3.12(5) *The COL holder for the first plant is to perform the pressurizer surge line monitoring subsequent to the COL item 14.2(11).*

3.12.8 References

3.12-1 Code for Pressure Piping, Power Piping. ASME B31.1, 2004 Edition, American Society of Mechanical Engineers.

3.12-2 ASME Boiler and Pressure Vessel Code, Section III, Division 1, Subsections NB, NC and ND, 1992 Edition including 1992 Addenda, The American Society of Mechanical Engineers.

3.12-3 General Design Criteria for Nuclear Power Plants, Domestic Licensing of Production and Utilization Facilities, Energy. Title 10, Code of Federal Regulations, Part 50, Appendix A, U.S. Nuclear Regulatory Commission, Washington, DC.

3.12-4 Earthquake Engineering Criteria for Nuclear Power Plants, Domestic Licensing of Production and Utilization Facilities, Energy. Title 10, Code of Federal Regulations, Part 50, Appendix S, U.S. Nuclear Regulatory Commission, Washington, DC.

3.12-5 Code Cases: Nuclear Components, Boiler and Pressure Vessel Code. 1992 Edition, American Society of Mechanical Engineers.

3.12-6 Design, Fabrication, and Materials Code Case Acceptability, ASME Section III. Regulatory Guide 1.84, Rev. 34, U.S. Nuclear Regulatory Commission, Washington, DC, August 2005.

3.12-7 ASME Code Cases Not Approved For Use, Regulatory Guide 1.193, Rev. 1, U.S. Nuclear Regulatory Commission, Washington, DC, August 2005.

3.12-8 Seismic Subsystem Analysis, Design of Structures, Components, Equipment, and Systems, Standard Review Plan for the Review of Safety Analysis Reports for Nuclear Power Plants. NUREG-0800, SRP 3.7.3, Rev. 3, U.S. Nuclear Regulatory Commission, Washington, DC, March 2007.

3.12-9 Development of Floor Design Response Spectra for Seismic Design of Floor-Supported Equipment or Components. Regulatory Guide 1.122, Rev. 1, U.S. Nuclear Regulatory Commission, Washington, DC, February 1978.

3.12-10 Damping Values for Seismic Design of Nuclear Power Plants. Regulatory Guide 1.61, Rev. 1, U.S. Nuclear Regulatory Commission, Washington, DC, March 2007.

3.12-11 Combining Modal Responses and Spatial Components in Seismic Response Analysis. Regulatory Guide 1.92, Rev. 1, U.S. Nuclear Regulatory Commission, Washington, DC, February 1976.

3.12-12 Seismic System Analysis, Design of Structures, Components, Equipment, and Systems, Standard Review Plan for the Review of Safety Analysis Reports for Nuclear Power Plants. NUREG-0800, Standard Review Plan 3.7.2, Rev. 3, U.S. Nuclear Regulatory Commission, Washington, DC, March 2007.

3.12-13 Combining Modal Responses and Spatial Components in Seismic Response Analysis. Regulatory Guide 1.92, Rev. 2, U.S. Nuclear Regulatory Commission, Washington, DC, July 2006.

3.12-14 PIPESTRESS Theory Manual, DST Computer Services. S.A., Geneva, Switzerland.

3.12-15 Gordis, K. Outline of Dynamic Analysis for Piping Systems. Nuclear Engineering and Design, Volume 52, No. 1, March 1979.

3.12-16 Dynamic Testing and Analysis of Systems, Structures, and Components, Design of Structures, Components, Equipment, and Systems, Standard Review Plan for the Review of Safety Analysis Reports for Nuclear Power Plants. NUREG-0800, SRP 3.9.2, Rev. 3, U.S. Nuclear Regulatory Commission, March 2007.

3.12-17 Piping Benchmark Problems. Vol. 1, NUREG/CR-1677, August 1980, Piping Benchmark Problems. Vol. 2, NUREG/CR-1677, U.S. Nuclear Regulatory Commission, Washington, DC, August 1985.

3.12-18 PIPESTRESS, Piping Stress Analysis Program, Version 3.6.2.

3.12-19 Abaqus, Finite Element Structural Analysis Program, Version 6.7, SIMULIA, Providence, RI.

3.12-20 ANSYS, Advanced Analysis Techniques Guide, Release 11.0, ANSYS, Inc., 2007.

3.12-21 RELAP-5, Transient Hydraulic Analysis Program, MOD 3.2, Idaho National Engineering and Environmental Laboratory, Idaho Falls, ID.

3.12-22 E/PD STRUDL, Release 1197, PHI-DELTA Inc., 42 Holbrook Avenue, Braintree. MA 02184, January 23, 1998.

3.12-23 Manual of Steel Construction. American Institute of Steel Construction, 9th Edition, 1989.

3.12-24 Pipe Support Base Plate Designs Using Concrete Expansion Bolts. IE Bulletin No. 79-02, Rev. 1, U.S. Nuclear Regulatory Commission, 1979.

3.12-25 Piping Benchmark Problems for the Westinghouse AP600 Standardized Plant. NUREG/CR-6414, U.S. Nuclear Regulatory Commission, Washington, DC, August 1996.

3.12-26 Guidelines for Evaluating Fatigue Analyses incorporating the Life Reduction of Metal Components Due to the Effects of the Light Water Reactor Environment for New Reactors. Regulatory Guide 1.207, Rev. 0, U.S. Nuclear Regulatory Commission, Washington, DC, March 2007.

3.12-27 Thermal Stresses in Piping Connected to Reactor Coolant Systems. NRC Bulletin No. 88-08 including Supplement 3, U.S. Nuclear Regulatory Commission, Washington, DC, 1988.

3.12-28 Cracking In Feedwater Piping. NRC IE Bulletin No. 79-13, Rev. 2, U.S. Nuclear Regulatory Commission, Washington, DC, 1979.

3.12-29 Pressurizer Surge Line Thermal Stratification. NRC Bulletin No. 88-11, U.S. Nuclear Regulatory Commission, Washington, DC, 1988.

3.12-30 ASME Boiler and Pressure Vessel Code, Section III, Division 1 – Appendices, Nonmandatory Appendix O, 1992 Edition.

3.12-31 Functional Capability of Piping Systems. NUREG-1367, U.S. Nuclear Regulatory Commission, Washington, DC, November 1992.

3.12-32 ASME Boiler and Pressure Vessel Code, Section III, Division 1, Subsection NF, 2001 Edition including 2003 addenda, The American Society of Mechanical Engineers.

3.12-33 ASME Boiler and Pressure Vessel Code, Section III, Division 1 – Appendices, Nonmandatory Appendix F, 2001 Edition including 2003 addenda.

3.12-34 Structural Welding Code – Steel. AWS D1.1/D1.1M, American Welding Society, 2006.

3.12-35 Service Limits and Loading Combinations for Class 1 Linear-Type Supports. Regulatory Guide 1.124, Rev. 2, U.S. Nuclear Regulatory Commission, Washington, DC, February 2007.

3.12-36 Service Limits and Loading Combinations for Class 1 Plate-and-Shell-Type Component Supports. Regulatory Guide 1.130, Rev. 2, U.S. Nuclear Regulatory Commission, Washington, DC, March 2007.

3.12-37 Code Requirements for Nuclear Safety-Related Concrete Structures (ACI-349-06) and Commentary, American Concrete Institute, 2006.

3.12-38 Anchoring Components and Structural Supports in Concrete. Regulatory Guide 1.199, U.S. Nuclear Regulatory Commission, Washington, DC, November 2003.

3.12-39 IEEE Recommended Practice for Seismic Qualification of Class 1E Equipment for Nuclear Power Generating Stations, IEEE Std 344-2004, Institute of Electrical and Electronic Engineers Power Engineering Society, New York, New York, June 2005.

3.12-40 Evaluation of Potential for Pipe Breaks, Report of U.S. NRC Piping Review Committee. NUREG-1061, Volume 4, U.S. Nuclear Regulatory Commission, Washington, DC, 1984.

3.12-41 Dynamic Analysis of Piping, Using the Structural Overlap Method. NUREG/CR-1980, U.S. Nuclear Regulatory Commission, Washington, DC, March 1981.

3.12-42 ASME Boiler and Pressure Vessel Code, Section II, 2001 Edition including 2003 Addenda, The American Society of Mechanical Engineers.

3.12-43 Guideline for Evaluation of High-Cycle Thermal Fatigue of a pipe, JSME S 017-2003, November 2003.

3.12-44 STAAD.Pro, Bentley Systems Inc., 1600 Riviera Avenue, Suite 300 Walnut Creek, California 94596.

Table 3.12-1 ASME Code, Section III, Class 1, 2, 3, CS and Support Load Symbols and Definitions

Load Symbol	Load Definition
DL	Dead Load (The dead weight consists of the weight of the piping, insulation, and other loads permanently imposed upon the piping)
P	Design Pressure
P_R	Range of Service Pressure
P_M	Maximum Service Pressure
F	Friction Loads
TH_{MTL}	ASME Service Level A (Normal) and Service Level B (Upset) Miscellaneous Thermal Loads with Thermal Stratification, Thermal Cycling Effects and static displacement of pre-stressed concrete containment vessel during normal and upset conditions
TH_E	ASME Service Level C (Emergency) Thermal Load
TH_F	ASME Service Level D (Faulted) Thermal Load
TH_{DISCON}	Thermal Discontinuity Loads
TH_{GRAD}	Thermal Radial Gradient Loads
L_{DM}	Design Mechanical Loads
L_{DMS}	Design Mechanical Loads (sustained)
SSEI	Safe-Shutdown Earthquake Inertia Loads
SSEA	Safe-Shutdown Earthquake Anchor Loads
SE	SE is Support self weight excitation, the effect of the acceleration of the support mass caused by building inertial loads such as *SSEI*
SET	Building Settlement
L_{DFN}	ASME Service Level A (Normal) Dynamic Fluid Loads associated with hydraulic transients such as relief/safety valve open or water/steam hammer
L_{DFU}	ASME Service Level B (Upset) Dynamic Fluid Loads associated with hydraulic transients such as relief/safety valve open or water/steam hammer
L_{DFE}	ASME Service Level C (Emergency) Dynamic Fluid Loads associated with hydraulic transients such as relief/safety valve open or water/steam hammer
L_{DFF}	ASME Service Level D (Faulted) Dynamic Fluid Loads associated with hydraulic transients such as relief/safety valve open or water/steam hammer
DBPB	Design Basis Pipe Breaks, include LOCA and non-LOCA, and static displacement of pre-stressed concrete containment vessel during normal and upset conditions
LOCA	Loss-of-Coolant Accident
W	Severe Wind Load
W_T	Tornado or Hurricane Load

Table 3.12-2 Loading Combinations for ASME Code, Section III, Class 1 Piping (Sheet 1 of 2)

Condition	Service Level	Category	Loading	Equation (NB-3650)(4)	Stress Limit(4)
Design	-	Primary Stress	P, DL, L_{DM} (including L_{DFN})	Eq. 9 NB-3652	1.5 S_m
Normal /Upset	A/B	Primary + Secondary Stress Intensity Range (SIR)	(3) P_R, TH_{MTL}, TH_{DISCON}, L_{DFN}, L_{DFU}, $SSEI$, $SSEA$	Eq. 10 NB-3653.1	3 S_m
		Peak SIR	P_R, TH_{MTL}, TH_{DISCON}, TH_{GRAD}, L_{DFN}, L_{DFU}, $SSEI$, $SSEA$	Eq. 11 NB-3653.2	
		Thermal Bending SIR	(2) TH_{MTL}	Eq. 12 NB-3653.6(a)	3 S_m
		Primary + Secondary Membrane + Bending SIR	(2) P_R, TH_{DISCON}, L_{DFN}, L_{DFU}, $SSEI$, $SSEA$	Eq. 13 NB-3653.6(b)	3 S_m
		Alternating Stress Intensity (Fatigue)	P_R, TH_{MTL}, TH_{DISCON}, TH_{GRAD}, L_{DFN}, L_{DFU}, $SSEI$, $SSEA$	NB-3653.3 NB-3653.4 NB-3653.5 NB-3653.6(c)	
		Thermal Stress Ratchet	TH_{GRAD} (linear)	NB3653.7	
Upset	B	Permissible Pressure	P_M	NB-3654.1	1.1 Pa
		Primary Stress	P_M, DL, L_{DFU}	NB-3654.2	Min(1.8 S_m,1.5 S_y)
Emergency	C	Permissible Pressure	P_M	NB-3655.1	1.5 Pa
		Primary Stress	P_M, DL, L_{DFE}	NB-3655.2	Min(2.25 S_m,1.8 S_y)
Faulted	D	Permissible Pressure	P_M	NB-3656(b)	2 Pa
		Primary Stress	P_M, DL, L_{DFF}(1), $SSEI$, $DBPB$(1)	NB-3656(a) NB-3656(b)	Appendix-F or Min(3 S_m,2 S_y)
Faulted	D	Secondary Stress	$SSEA$	(5)	6 S_m(5)

Table 3.12-2 Loading Combinations for ASME Code, Section III, Class 1 Piping (Sheet 2 of 2)

Notes:

1. Dynamic loads are to be combined considering timing and causal relationships. SSE and DBPB is combined using the SRSS.

2. The Thermal and Primary plus Secondary Membrane plus Bending Stress Intensity Ranges (Equations 12 and 13) need only be calculated for those load sets that do not meet the Primary plus Secondary Stress Intensity Range (Equation 10) allowable.

3. The earthquake inertial and anchor movement loads used in the Level B Stress Intensity Range and Alternating Stress calculations (Equations 10, 11, 13 and 14) is taken as 1/3 of the peak SSE inertial and anchor movement loads or as the peak SSE inertial and anchor movement loads. If the earthquake loads are taken as 1/3 of the peak SSE loads then the number of cycles to be considered for earthquake loading is to be 300 as derived in accordance with the Institute of Electrical and Electronic Engineers Standard 344-2004 (Reference 3.12-39) If the earthquake loads are taken as the peak SSE loads then 20 cycles of earthquake loading is considered. Also, see Note 2.

4. ASME Boiler and Pressure Vessel Code, Section III.

5. $\frac{C_2 D_o M_{AM}}{2I} \leq 6.0 S_m$ and $\frac{F_{AM}}{A_M} \leq S_m$

   where

   D_o = Pipe Outer Diameter
   I = Pipe Moment of Inertia
   A_M = Area of cross-section of the pipe
   M_{AM} = Range of resultant moment due to *SSEA*
   F_{AM} = Amplitude of longitudinal force due to *SSEA*
   S_m = Allowable design stress intensity value

   The use of $6S_m$ limit assumes elastic behavior of the entire piping system. In the case of unbalanced systems, the design is modified to eliminate unbalance or the piping is qualified by using an allowable limit of $3S_m$.

Table 3.12-3 Loading Combinations for ASME Code, Section III, Class 2 and 3 Piping

Condition	Service Level	Loading	Equation (NC/ND-3650)	Stress Limit(3)
Design	-	P, DL, L_{DMS}	Eq. 8 NC/ND-3652	1.5 S_h
Normal /Upset	A/B	P_M, DL, L_{DMS}, L_{DFN}, L_{DFU}, W	Eq. 9 NC/ND-3653.1	Min(1.8 S_h, 1.5 S_y)
		TH_{MTL}	Eq. 10 NC/ND-3653.2(a)	S_A (1)
		Building Settlement	Eq. 10a NC/ND-3653.2(b)	$3S_c$
		P_M, DL, L_{DMS}, TH_{MTL}	Eq. 11 NC/ND-3652.2(c)	$S_h + S_A$ (1)
Emergency	C	P_M, DL, L_{DMS}, L_{DFE}, W_T	Eq. 9 NC/ND-3654	Min(2.25 S_h,1.8 S_y)
Faulted	D	P_M, DL, L_{DMS}, L_{DFF}, $SSEI$, $DBPB$	Eq. 9 NC/ND-3655	Min(3 S_h, 2 S_y)
		$SSEA$	(5)	$6S_h$ (5)

Notes:

1. Stresses must meet the requirements of either Equation 10 or 11, not both.
2. If, during operation, the system normally carries a medium other than water (air, gas, steam), sustained loads should be checked for weight loads during hydrostatic testing as well as normal operation weight loads.
3. ASME Boiler and Pressure Vessel Code, Section III
4. Dynamic loads are combined by the SRSS.
5. $\frac{C_2 D_o M_{AM}}{2I} \leq 6.0 S_h$ and $\frac{F_{AM}}{A_M} \leq S_h$

   where

   D_o = Pipe Outer Diameter
   I = Pipe Moment of Inertia
   A_M = Area of cross-section of the pipe
   M_{AM} = Range of resultant moment due to *SSEA*
   F_{AM} = Amplitude of longitudinal force due to *SSEA*
   S_h = Allowable stress value

   The use of $6S_h$ limit assumes elastic behavior of the entire piping system. In the case of unbalanced systems, the design is modified to eliminate unbalance or the piping is qualified by using an allowable limit of $3S_h$.

Table 3.12-4 Loading Combinations for Piping Supports

Condition	Design Loading Combinations[4]
Level A Service	$DL + L_{DMS} + L_{DFN} + TH_{MTL} + F + SET$
Level B Service	$DL + L_{DMS} + L_{DFU} + TH_{MTL} + W + SET$
Level C Service	$DL + L_{DMS} + L_{DFE} + TH_{E} + W_{T} + SET$
Level D Service	$DL + L_{DMS} + L_{DFF} + TH_{F} + SET$ $DL + L_{DMS} + L_{DFF} + TH_{MTL} + DBPB + SET$ $DL + L_{DMS} + L_{DFF} + TH_{MTL} + SET + SRSS(DBPB, (SSEI + SSEA + SE)^{(3)})^{(1)}$

Notes:

1. SRSS stands for the square root sum of the squares.
2. Deleted
3. Combine *SSEI, SSEA*, and *SE* by absolute sum method. *SE* is support self weight excitation, the effect of the acceleration of the support mass caused by building inertial loads such as *SSEI.*
4. If, during operation, the system normally carries a medium other than water (air, gas, steam), sustained loads should be checked for weight loads during hydrostatic testing as well as normal operation weight loads.

Table 3.12-5 Piping Functional Capability – ASME Code, Section III, Class 1, 2, and 3(1)

Wall Thickness:	$D_o/t \leq 50$, where D_o, t are per ASME III
Service Level D Conditions	Equation 9 ≤ smaller of 2.0 S_y and 3.0 S_m(2, 4, 5) Equation 9 ≤ smaller of 2.0 S_y and 3.0 S_h(3, 4, 6)
External Pressure:	$P_{external} \leq P_{internal}$

Notes:

1. Applicable to Level C or Level D service conditions for which the piping system must maintain an adequate fluid flow path

2. Applicable to ASME Code, Section III, Class 1 piping.

3. Applicable to ASME Code, Section III, Class 2 and 3 piping.

4. Applicable to ASME Code, Section III, Class 1, 2 and 3 piping when the following limitations are met:

   4.1 Dynamic loads are reversing (slug-flow water hammer loads are non-reversing)
   4.2 Slug-flow water-hammer loads are combined with other design basis loads (for example: SSE; pipe break loads)
   4.3 Steady-state bending stress from deadweight loads does not exceed:

$$\frac{B_2 M}{Z} \leq 0.25\, S_y$$

   4.4 When elastic response spectrum analysis is used, dynamic moments are calculated using 15% peak broadening and not more than 5% damping

5. For ASME Code, Section III, Class 1 piping, when slug-flow water hammer loads are only combined with pressure, weight and other sustained mechanical loads, the Equation 9 stress does not exceed the smaller of 1.8 S_y and 2.25 S_m.

6. For ASME Code, Section III, Class 2 and 3 piping, when slug-flow water hammer loads are only combined with pressure, weight and other sustained mechanical loads, the Equation 9 stress does not exceed the smaller of 1.8 S_y and 2.25 S_h.

Table 3.12-6 Design Transients of Reactor Coolant Piping Branch Connections

Event	Cycles
Charging nozzle and piping	-
Letdown shut off and re-initiated	70
Charging shut off and re-initiated	-
Maintenance of Regenerative Heat Exchanger	30
Safety injection	70
Charging flow 50% step decrease and return	20,400
Charging flow 50% step increase and return	23,600
Letdown flow 50% step decrease and return	2,900
Letdown flow 100% step increase and return	19,800
Accumulator injection nozzle and piping.	-
Inadvertent operation of accumulator	5
Inadvertent RCS depressurization	30
Containment Spray/Residual Heat Removal System return nozzle and piping	-
Plant heat-up	120
Plant cooldown	120
Refueling	60
Direct vessel safety injection nozzle and piping	-
Reactor trip from full power with cooldown and safety injection	10
Inadvertent RCS depressurization	30
Inadvertent safeguard actuation	30
Plant safe shutdown	1
Inlet piping of pressurizer safety valve	-
Pressurization safety valve actuation	60
Inlet piping of safety depressurization valve	-
Safety depressurization valve actuation	60
Containment Spray/Residual Heat Removal System suction nozzle and piping	-
Plant heat-up	120
Plant cooldown	120
Letdown nozzle and piping	-
Plant heat-up	120
Plant cooldown	120
Maintenance of Regenerative Heat Exchanger	30
Safety injection	70
Excess letdown nozzle and piping	-
Plant heat-up	120
Emergency letdown nozzle and piping	-
Plant safe shutdown	1
RCS loop drain nozzle and piping	-
Plant cooldown	120

Table 3.12-7 Evaluation from Viewpoint of Valve Seat Leakage

	Part	Remarks
Reactor Vessel	Reactor Vessel Head Vent Line	N/A
	Direct Vessel Safety Injection Line	N/A
Hot Leg	Hot Leg Recirculation Line	N/A
	Containment Spray/Residual Heat Removal Pump Hot Leg Suction Line	N/A
	Emergency Letdown Line	N/A
Cross-over Leg	Loop Drain Line	N/A
	Excess Letdown Line	N/A
	RCS Cavity/RCS Level Meter Line	N/A
Cold Leg	Accumulator Injection Line	N/A
	Residual Heat Removal discharge line	N/A
Pressurizer	Pressurizer safety valve inlet line	N/A
	Safety depressurization valve inlet line	N/A
	Pressurizer auxiliary spray line	Since this line is isolated by AOV and check valve, there is a possibility of valve seat leakage into the RCS. The temperature difference between spray line flow and valve seat leakage flow is small. It is therefore considered that fatigue failure of this line caused by valve seat leakage and resulting thermal stratification or thermal oscillation is not a concern.

Of the above places, only auxiliary spray line is In-leak.
Note : N/A means "Not Applicable" since the pressure downstream from closed valve in the related line is lower than RCS pressure.

Table 3.12-8 Evaluation from Viewpoint of Valve Gland Leakage

	Part	Remarks
Hot Leg	Containment Spray/Residual Heat Removal Pump Hot Leg Suction Isolation Valve	High-cycle fatigue is prevented by valve disk position adjustment so as to permit continuous leakage through the valve gland packing.
	Emergency Letdown Isolation Valve	High-cycle fatigue is prevented by valve disk position adjustment so as to permit continuous leakage through the valve gland packing.
Pressurizer	Safety Depressurization Valve	Inlet piping does not have a thermal shield, and the valve is sealed by water. The valve disc does not experience the high-temperature steam, and is maintained at a constant temperature, so that there is no contraction and expansion of the valve disc and therefore no thermal cycling.

3.13 Threaded Fasteners (ASME Code Class 1, 2, and 3)

3.13.1 Design Considerations

3.13.1.1 Materials Selection

This section addresses US-APWR standard plant and site-specific plant selection of threaded fastener materials for ASME Boiler and Pressure Vessel Code (ASME Code), Section III, Class 1, 2, and 3 systems (Reference 3.13-1), and applications from NUREG-0800, SRP 3.13 (Reference 3.13-2). Threaded fasteners used in US-APWR nuclear power plants comprise ASME Code Class 1, 2, and 3 fasteners (bolts, studs, nuts, washers, and screws). The materials used for all threaded fasteners are suitable for, and compatible with, the plant design temperatures, pressures, loads, stresses, and operating service conditions including corrosion and radiation exposures. ASME Code, Section III (Reference 3.13-1), provides acceptance standards for selecting threaded fasteners used in mechanical connections for ASME Code Class 1, 2, and 3 applications. Table 3.13-1 lists the applicable criteria in ASME Code, Section III (Reference 3.13-1), relevant to the material selection for threaded fasteners in Class 1, 2, and 3 systems. The use of suitable washers for bolting in accordance with NB-2128 (Table 3.13-1) is optional but is used for all three Code Classes. If washers are used, they are fabricated from wrought materials with mechanical properties compatible with the connecting nuts and bolts.

3.13.1.1.1 Class 1 Applications

ASME Code, Section III (Reference 3.13-1), Paragraphs NCA-1220 (Table 3.13-1), and NB-2128 provide the material selection criteria for threaded fasteners used in Class 1 applications. NB-2128 Bolting Material (Table 3.13-1) provides that material for bolts and studs shall conform to the requirements of one of the specifications listed in ASME Code, Section II (Reference 3.13-3), Part D, Subpart 1, Table 4. The materials for nuts should conform to either ASME SA 194, Specification for Carbon and Alloy Steel Nuts for Bolts for High Pressure and High Temperature Service, or to one of the specifications listed in Section II, Part D, Subpart 1, Table 4. Table 4 provides design stress intensities (allowable stresses) for bolting materials used in ASME Code, Section III (Reference 3.13-1), Division 1, Class 1 applications. Table 4 covers ferrous and nonferrous bolting materials. The nominal chemical compositions of the bolting materials are listed, by increasing ultimate tensile strengths, by increasing yield strengths, and finally by increasing specification numbers. For simplicity, the nut materials should comply with ASME SA 194 to secure the Table 4 bolt materials for Class 1 applications along with compatible hard washers as discussed below.

For bolting materials used for RV closure studs, RG 1.65 (Reference 3.13-4) provides acceptable criteria for selecting such bolt materials. Closure stud bolting is defined to include all studs (stud bolts), nuts, and washers used to fasten the RV head to the RV. The RV closure stud bolting is fabricated from materials with adequate toughness throughout the life cycle of the reactor as identified by the impact testing cited below. RV closure stud bolting meets the requirements in Subsection NB, Requirements for Class 1 Components, of Section III of the ASME Code (Reference 3.13-1). Stud bolts, nuts and washers are ASME Code, Section II, SA 540 Grade B24 material and satisfy the fracture toughness requirements of ASME Code, Section III (Reference 3.13-1), and 10 CFR 50,

Appendix G (Reference 3.13-5), as well as meeting the requirements of Subsection 5.3.1.7.

The requirements of the above paragraph are supplemented by the following:

a. The maximum measured ultimate tensile strength (UTS) of the stud bolting material should not exceed 170 ksi.

b. Charpy V-notch (C_V) impact testing for RV stud bolts should be in accordance with ASME Section III (Reference 3.13-1) Subsection NB and the results must satisfy Subsection NB and 10 CFR 50 Appendix G (Reference 3.13-5) requirements. C_V impact testing should be performed according to “Methods and Definitions for Mechanical Testing of Steel Products”, ASME SA 370 (Reference 3.13-4), and the results must meet the requirements of Subsection NB and 10 CFR 50 Appendix G (Reference 3.13-5). In case a test fails, one retest may be conducted according to ASME Code, Section III (Reference 3.13-1), NB-2350 (Retesting), Table 3.13-1.

c. Stud bolting is not to be metal plated. Thread lubricants used are stable at operating temperatures and radiation levels and are compatible with the bolting and vessel materials and the service environment. The use of a suitable thread lubricant aids in preload torquing as well as assembly and disassembly of the RV closure stud bolts. Subsection 5.3.1.7 references the use of manganese base phosphate surfacing treatment on RV closure studs for added protection against corrosion.

3.13.1.1.2 Class 2 and 3 Applications

ASME Code, Section III (Reference 3.13-1), Paragraphs NCA-1220 and NC-2128 (Table 3.13-1) provide the material selection criteria for threaded fasteners used in Class 2 applications. The criteria for selecting bolt materials for ASME Code Class 3 applications are specified in Paragraphs NCA-1220 and ND-2128. In accordance with Paragraphs NC-2128 and ND-2128, bolting materials conform to one of the specifications listed in ASME Section II, Part D, Subpart 1, Table 3 (Reference 3.13-3). The materials used for nuts should conform to either ASME SA 194 or to one of the specifications listed in Subpart 1, Table 3. For consistency, the nut materials should comply with ASME SA 194 to secure the Table 3 bolt materials for Class 2 and 3 applications. Again, the use of washers is optional but recommended. When used, washers are made of wrought material with mechanical properties compatible to the connecting SA 194 nut and bolting materials.

Hard washers of suitable wrought materials for Class 1, 2, and 3 fastener applications should be employed in designing bolted connections for the following benefits as cited in References 3.13-6 and 3.13-7.

a. Washers distribute the load placed by the bolt or nut on the joint and thus increase the ratio of joint and bolt stiffness. This can help reduce bolt fatigue problems.

b. Washers make the interface forces between joint members more uniform, which can improve gasket performance.

c. Washers can bridge slotted or oversized holes, aiding assembly of poorly mated parts.

d. Washers can significantly reduce the friction between a turning nut and the joint members. This reduces the size of the bolting tool required, reduces the torques required, and often improves the accuracy and repeatability of the torquing operations.

e. Washers can prevent damage to soft joint surfaces.

f. Washers reduce the amount of embedment between nut, bolt, and joint members, reducing relaxation after tightening.

3.13.1.2 Special Materials Fabrication Processes and Special Controls

The criteria for mechanical property testing of threaded fastener materials are identified in the specification of “Ferrous Materials Specifications”, ASME Code, Section II, Part A (Reference 3.13-3). This includes specifying the proper mechanical tests in accordance with Part A for each type of threaded fastener. Table 3.13-1 identifies the appropriate section of the ASME Code regarding material heat treatment and tensile test coupon preparation criteria for ferritic materials (e.g., carbon steel, high strength low alloy [HSLA] steel). In cases of conflict between the two criteria applicable to mechanical testing, ASME Code, Section III (Reference 3.13-1), Subparagraphs NB-2200, NC-2200, and ND-2200 are used in lieu of ASME Code, Section II, Part A.

3.13.1.2.1 Material Test Coupons and Specimens for Ferritic Steel Material (Tensile Test Criteria)

The Heat Treatment Criteria for Ferritic Material are described in NB-2210, NC-2210, and ND-2210, Table 3.13-1. Where ferritic steel material is subjected to heat treatment during fabrication or installation of a fastener, the material used for the tensile and impact test specimens is heat treated in the same manner as the fastener, except that test coupons and specimens for P-No.1 Group Nos. 1 and 2 material with a nominal thickness of 2 inches or less are not required to be so heat treated. The certificate holder provides the material organization with the temperature and heating and cooling rates to be used.

3.13.1.2.2 Test Coupons Requirements for Bolting/Stud Materials

Under general requirements in NB-2221, NC-2221, and ND-2221 (Table 3.13-1), the coupon and specimen locations and the number of tensile test specimens are in accordance with the material specifications. In accordance with ASME Code, Section III (Reference 3.13-1), Paragraph NB-2224(b), tests are made of either full size bolts or test coupons as required by the base specification. The gage lengths of the tension specimens and the area under the notch of Charpy specimens are at least one diameter or thickness from the heat-treated end. Under ASME Section III (Reference 3.13-1) Paragraph NC-2224.3, the coupons are taken in accordance with the applicable material specification and with the midlength of the specimen at least one diameter or thickness from the heat-treated end. When the bolts, studs, or nuts are not sufficiently long, the midlength of the specimen is defined as the midlength of the fastener components. The bolts, studs, or nuts selected to provide test coupon material are identical with respect to

the quenched contour and size except for length, which equals or exceeds the length of the chosen fastener components. The same material test coupon and specimen requirements for NC-2224.3 apply to Paragraph ND-2224.3 (Bolting Material), Table 3.13-1.

3.13.1.2.3 Reactor Vessel Closure Stud Bolting

HSLA RV stud bolting is fabricated on grades of steel such as ASME SA 540 B24, using closely controlled procedures on quenching and tempering. Proper control of the tempering procedure is necessary to obtain the desired balance of mechanical properties. The objective is a tough bolting material with optimum strength, ductility and impact strength. HSLA RV stud bolt materials, when tempered to a maximum UTS of 170 ksi, are relatively immune to SCC. Above this UTS level, HSLA steels become increasingly susceptible to SCC. Design conservatism is therefore followed so that the specified strength level of the material selected will not result in a measured UTS exceeding 170 ksi, thus mitigating possible SCC of the bolting.

Properly heat-treated HSLA steels are generally used as RV closure stud bolting materials. It is important that bolting material has adequate toughness throughout the reactor operating cycle. For high strength large diameter bolting, great care must be taken to assure adequate fracture toughness. Control of the tempering procedure is essential for this purpose. Fracture toughness for ASME SA 540 Gr. 24 HSLA steel as measured by energy absorption can be moderately increased by suitable metallurgical practices.

RV closure studs and nuts have a minimum C_V energy (impact strength) of 45 ft-lb and a minimum lateral expansion of 0.025 inch. In general, RV closure stud bolts are removed prior to raising the water level during refueling or other operations involving vessel head removal, and to provide seal plugs to insert into the RV flange stud holes to protect against corrosion and contamination during stud removal.

3.13.1.2.4 General Corrosion and Stress Corrosion Cracking of Threaded Fasteners

In nuclear reactor environments involving threaded fasteners, there are two major forms of corrosion: General and SCC (see References 3.13-6 and 3.13-7). General corrosion of carbon steel and HSLA steel fasteners can occur in a reactor primary coolant containing borated water or boric acid. While relatively low levels of boric acid are used in reactor coolant systems, under wetting and drying conditions the boric acid solution can concentrate and become quite corrosive to carbon steel and HSLA steel fasteners. Generally, coatings, plating and surface treatments of ferritic bolting materials have not proven effective against hot, concentrated boric acid. Corrosion resistant fastener materials such as the austenitic stainless steels (SSs) (e.g., 316) offer good resistance to boric acid corrosion. The boric acid corrosion problem is due to leaking coolant, which concentrates the dilute acid to much higher levels. Without such leaks, carbon steel and HSLA steel bolting generally perform well. Thus, preventing leaks will basically control boric acid corrosion of ferritic fastener materials.

SCC is a form of localized corrosion in which a fastener that is statically loaded well below the material yield strength can suddenly fail. SCC requires three essential conditions for

this sudden failure: (1) a susceptible material; (2) sufficient tensile stresses; and (3) a corrosive environment or species (e.g., chlorides). If any one of these three conditions is absent or eliminated, SCC will not occur. Temperature is another key factor along with stress crack initiators such as pits. SCC failures have occurred in both pressure boundary bolting and in structural supports. The pressure boundary failures were initiated by sharp thread roots (stress concentrators), leaks, and sealing repairs, which provided a corrosive environment. To prevent SCC, fastener designers should use a lower strength bolting material not subject to SCC by limiting the hardness of the fastener to a Rockwell C Hardness (HRC) below 40 (375 Brinell hardness number) in humid air and even lower HRC (Brinell hardness number]) for more corrosive media. Other SCC control measures include reducing stress levels, eliminating stress concentrations due to thread defects and thread root radius, performing good housekeeping, and properly storing of fasteners until installed. SCC can be avoided by limiting the preload to some threshold stress level using a fracture mechanics technique. If feasible and applicable, controlled shot peening of bolting can prevent SCC by inducing a shallow surface layer of compressive stresses since SCC requires tensile stresses to occur. With bolting materials such as SA 193 and SA 540, SCC can be avoided through control of stress and environmental factors. Good housekeeping practices that control boric acid attack should reduce the potential for SCC. Leaks from flanged joints should be eliminated or minimized. All spillage of primary coolant during maintenance operations should be removed promptly to prevent contamination. Such actions will reduce the possibility that a hostile environment will initiate SCC. Stress levels should be controlled whenever possible, since the susceptibility to SCC decreases when tensile stresses are reduced.

Regarding possible Galvanic Corrosion of threaded fasteners, while the selection of bolting should consider electrochemical compatibility of the mating materials, galvanic (dissimilar metal) corrosion should not be a problem for the following reasons: The Galvanic Series of Metals and Alloys (typically in ambient seawater) lists the half-cell potentials of metals from the most anodic (active, corroding) to the most cathodic (passive, noble). (In galvanic corrosion, the anodic metal corrodes while the cathodic metal is protected.) The greater the distance between the metals in the series, the greater the galvanic corrosion effect. Thus, metals close to one another should be used in bolted connections to minimize the potential difference (driving force) between the two metals. The other key factor in galvanic corrosion is the area ratio between the dissimilar metals. A large anode/cathode area ratio is preferred for minimal galvanic corrosion. A small anode/cathode area ratio will increase the current density, thus promoting localized attack (pitting) of the anodic metal (typically carbon steel or HSLA steel surfaces).

Fastener alloys with relatively small areas are either the same as or cathodic to the larger anodic base metal being joined. For example, SS bolting (cathode) connecting carbon steel or HSLA components (anode) is a favorable area ratio. This results in any galvanic corrosion being uniformly distributed over the larger, thicker carbon steel/HSLA part (low current density) with nil loss of the SS bolting. HSLA steel bolting has virtually the same electrochemical potential (or may be slightly cathodic) as carbon steel components, resulting in a negligible galvanic corrosion effect. For these reasons, galvanic corrosion of threaded fasteners should not pose a problem. If the above corrosion control measures are practiced, the two main potential forms of fastener corrosion (General and SCC) should be mitigated by preventing leakage and carefully selecting corrosion resistant bolting materials.

3.13.1.2.5 Fastener Thread Lubricants and Sealants

Lubricants: For typical high temperature, high-pressure nuclear primary coolant conditions, there are three main generic dry film lubricants available for use on threaded fasteners: graphite, “Teflon” polytetrafluoroethylene (PTFE), and molybdenum disulfide (MoS_2). As stated in Reference 3.13-8, which cites Reference 3.13-9, MoS_2 is known to promote corrosion in HSLA fasteners and should not be used on any type of nuclear fastener regardless of material. MoS_2 can react with borated water to form corrosive acids, hydrogen sulfide (H_2S) and sulfuric acid (H_2SO_4), both aggressive to ferritic steel fasteners. Steam generator manway cover studs with evidence of MoS_2 lubricant have failed from SCC. NUREG-1339 (Reference 3.13-8) strongly opposes MoS_2 lubricant as detrimental and a potential contributor to SCC, especially when applied to HSLA bolting materials and thus is not used for this application. PTFE has the lowest friction coefficient of any solid and has very good chemical resistance and thermal stability. However, PTFE has poor radiation resistance and, therefore, is not used in the primary containment area or any other high radiation zones. A better all-purpose, inorganic thread lubricant is graphite, which also has good lubricity (low friction coefficient) with high thermal stability and radiation resistance. One commercial product used in nuclear power plants is “Neolube,” a graphite-based sealant/lubricant. Nuclear grade Neolube #1260 has excellent thermal stability (to 1200°F) and high radiation resistance (1.5 x 109 radiation absorbed dose). Neolube #1260 also seals up to 7,500 psi. This graphite flake paste is compatible with any ferritic or austenitic alloy bolting material and is thus acceptable for use. The use of a suitable thread lubricant aids in the bolting assembly and reduces the preload torque requirements. It also prevents seizing and galling of austenitic (300 Series) SS bolts, studs, and nuts. Galling is the cold welding of one heavily loaded metal surface to another, and dry (unlubricated) austenitic SS fasteners tend to gall if over-torqued. Thread lubrication will avoid this problem. In accordance with Reference 3.13-6, other acceptable thread lubricants and anti-seize products include: Fel-Pro C54, C670, N5000 and N7000, and Nuclear Grade Neverseez (e.g., Nickel Special [Ni-based]). Copper-based anti-seize compounds are not to be used to avoid possible galvanic (dissimilar metal) corrosion problems and possible contamination of the primary coolant. Thread lubricants must be compatible (nil chlorides, fluorides and sulfides) with the fastener materials and the service environment including design temperature. A thin uniform film of lubricant must be applied to the threads and bearing surfaces. Therefore, graphite (e.g., Neolube #1260) is considered a generally acceptable thread lubricant for nuclear fasteners, while MoS_2 is not to be used at all, and PTFE is unsuitable for primary containment applications because of low radiation resistance.

Sealants: Reference 3.13-6 discusses the use of and guidelines for leak sealants including bolt thread sealants. The application of leak sealants should be considered as temporary solutions, with leaking components repaired or replaced at the next available opportunity. Repairs should involve complete removal of the sealant and restoration of the component to its original condition or configuration. Controlled standard practices guide and assure the adequacy of leak sealing operations, which include: (a) Certified chemical analyses for each batch of sealant, test and document for each sealant batch or lot to establish chemical compatibility with bolting materials; (b) Sealant cavity pressure (closely monitored during the injection operation); and (c) Sealant volume needed prior to injection or application to avoid/minimize excess sealant from entering the reactor

coolant. Well-designed, properly lubricated fasteners do not generally employ or require thread sealants, which are temporary solutions and are not a part of a sound bolting design and installation program. An exception to temporary thread sealants is the graphite-based Neolube #1260, which is both a sealant and lubricant for bolting.

Cleaning and Cleanliness: RG 1.37 (Reference 3.13-9), which endorses ASME NQA-1-1994, Part II, Subpart 2.1 (Reference 3.13-10), describes the Quality Assurance requirements for cleaning and cleanliness control of fluid systems and associated components, including threaded fasteners, of water-cooled nuclear power plants.

3.13.1.3 Fracture Toughness Requirements for Threaded Fasteners Made of Ferritic Materials

For threaded fasteners made from ferritic (carbon steel and HSLA) steels in ASME Code, Section III (Reference 3.13-1), Class 1 systems, the fracture toughness properties and associated impact testing are in compliance with the applicable acceptance criteria described in Reference 3.13-5. However, these fracture toughness requirements do not apply to ferritic bolts, studs, and nuts used in Class 2 or 3 applications. 10 CFR 50.55a (Reference 3.13-11) invokes fracture toughness requirements in ASME Section III (Reference 3.13-1), Subarticles NC and ND for ferritic bolting used in Class 2 and 3 applications where the appropriate Section III (Reference 3.13-1) criteria in Table 3.13-1 applies.

For Class 1 Applications, ferritic steel bolts, studs, and nuts used in the RCPB have fracture toughness properties meeting the requirements for ferritic (carbon steel and HSLA) steels specified in Subarticle NB, ASME Code, Section III (Reference 3.13-1) and meet the fracture toughness criteria of 10 CFR 50, Appendix G (Reference 3.13-5). These requirements apply to ferritic materials for bolting and other types of fasteners with specified minimum yield strengths below 130 ksi.

The following fracture toughness criteria apply to ASME Code, Section III (Reference 3.13-1), Class 1, 2, and 3 bolting materials (see Table 3.13-1):

- Material to be impact tested: NB-2311, NC-2311, and ND-2311 state that bolting, including bolts, studs, and nuts, with a nominal size of 1 inch or less do not require impact testing. Likewise, austenitic SSs and nonferrous materials need not be impact tested. Thus, only ferritic steel bolting with a nominal size more than 1 inch requires impact testing.

- Types of impact tests: Two types of impact tests are specified under NB-2321.1 and NC-2321.1:

  - Drop Weight Tests: When required, this impact test is performed in accordance with ASTM E208. Specimen types P-Nos. 1, 2, or 3 may be used. The results, orientation, and location of all tests conducted to meet the requirements of NB-2330 are reported in the certified material test report.

  - C_V Tests: When required, this impact test is performed in accordance with SA-370 with specimens in accordance with SA-370, Figure 11, Type A. A test comprises a set of three full size 10 mm by 10 mm specimens. The lateral

expansion and absorbed energy, as applicable, and the test temperature along with the orientation and location of all tests conducted to meet the requirements of NB-2330 and NC-2330 are reported in the certified material test report. In ND-2321, the C_v test, when required, is performed in accordance with SA-370 with specimens in accordance with SA-370, Figure 11, Type A. The same C_v tests and specimens cited above for NB-2321.1 and NC-2321.1 are used, and the C_v test results meeting the requirements of ND-2330 are reported in the certified material test report.

- Test Coupons: NB-2322.l, NC-2322.1, and ND-2322.1 describe the location of test specimens. Impact test specimens are removed from the locations specified for tensile test specimens in the material specification. For bolting, the C_v impact test specimens are taken with the longitudinal axis of the specimens located at least one-half radius or 1 inch below the surface plus the machining allowance per side, whichever is less. The fracture plane of the specimens is at least one diameter or thickness from the heat-treated end. When the bolts, studs, or nuts are not sufficiently long, the mid-length of the specimen is at the mid-length of the fastener components. The bolts, studs, or nuts chosen to provide test coupon material are identical regarding the quenched contour and size except for length, which is equal to or exceeds the length of the selected fastener components. NB-2322.2 (orientation of impact test specimens) specifies that specimens obtained from bolting material for C_v impact testing shall be oriented in the axial direction. The notch of the C_v material is normal to the material surface for ASME Code Class 1, 2, and 3. NC-2322.2 (orientation of impact test specimens) specifies that specimens for C_v impact tests is oriented as required in NC-2200 for the tensile test specimen, or the orientation may be in the direction of maximum stress. ND-2321 covers only C_v impact test procedures, not drop weight impact tests, and has similar requirements for the C_v testing, ND-2322.1 for test coupon location, and ND-2322.2 for specimen orientation as the above two sections.

- Acceptance Standards: NB-2333 (bolting material) specifies that for bolts, studs, and nuts, three C_v specimens are tested at a temperature no higher than the preload temperature or the lowest service temperature, whichever is less. All three specimens meet the requirements of Table NB-2333-1, which lists the required lateral expansion and absorbed energy as a function of the nominal diameter of the bolting material. In NC-2332.3 and ND-2333 for bolting material, the C_v tests are performed at or below the lowest service temperature, and all three specimens are to meet the requirements of Table NC-2332.3-1 and Table ND-2333-1, respectively.

- Number of Impact Tests Required: NB-2345, NC-2345, and ND-2345 state that one test is made for each lot of material, where a lot is defined as one heat of material that is heat treated in one charge or as one continuous operation, not to exceed certain weights (mass), as a function of the bolting diameter.

- Retesting (NB-2350, NC-2352, ND-2352): For C_V tests required by NB-2333, NC-2332.3, and ND-2333, one retest at the same temperature may be conducted provided the requirements of the following are met:
  - The average value of the test results meets the minimum requirements.
  - No more than one specimen per test is below the minimum requirements.
  - The specimen not meeting the minimum requirements is not less than 10 ft-lb or 5 mils below the specified requirements. A retest comprises two additional specimens taken as near as feasible to the failed specimens. To accept the retest, both specimens shall meet the minimum requirements.
- Calibration of the Test Equipment: NB-2360, NC-2360, and ND-2360 state that calibration of temperature instruments and C_V impact test machines used in impact testing are performed at the following frequency:
  - Temperature instruments used to control test temperatures of specimens are calibrated and the results recorded in accordance with NCA-3858.2 at least once every three months.
  - C_V impact test machines are calibrated and the results recorded in accordance with NCA-3858.2 requirements. Such calibrations are conducted using the methods and frequency described in ASTM E23 and using standard specimens obtained from the National Institute of Standards and Technology (NIST).

For Fabrication Inspection/Examination Criteria for Bolts, Studs, and Nuts (Table 3.13-1), ASME Code, Section III (Reference 3.13-1) Class 1 bolting material (bolts, studs, and nuts) specifies the following inspection methods for Class 1 fastener components in accordance with NB-2580:

- Required Examinations: NB-2581 requires that all bolting material be visually examined in accordance with NB-2582. Nominal sizes over 1 inch are generally examined by the magnetic particle examination method (MT) for carbon steel and HSLA steels, and the liquid penetrant examination method (PT) for SS. Also, nominal sizes above 2 inches but not over 4 inches are examined by the ultrasonic examination method (UT) in accordance with NB-2585, and nominal sizes greater than 4 inches are examined by UT in accordance with NB-2586. NB-2582 (visual examination) requires that the areas of threads, shanks, and heads of final machined parts be visually examined. Harmful defects or discontinuities such as laps, seams, or cracks that would be detrimental to the intended service are unacceptable. NB-2583: MT of ferritic steel bolting material are performed in accordance with ASTM A275. Alternately, PT of ferritic steel bolting may be performed in accordance with NB-2584, if desired. Either nondestructive examination (NDE) method should be performed on the finished bolting, or on the materials stock at approximately the finished diameter before threading and after heading (if done), and performed on all accessible surfaces. Under evaluation of indications, the ASME Code specifies that all linear, nonaxial indications are

unacceptable, regardless of length. These same acceptance standards apply to examination of bolting above 1 inch nominal bolt size by the PT in accordance with ASME Code, Section V, Article 6 (Reference 3.13-12), under NB-2584.

- UT Examination of Bolting: As described in Section 5.3.1.7, material for stud bolts, nuts and washers are UT examined in accordance with ASME Code Section III (Reference 3.13-1), NB-2580, after final heat treatment but prior to machining of threads. The stud bolt surfaces are to be examined by straight beam UT examinations in two directions in accordance with ASME Code, Section III (Reference 3.13-1), NB-2585, and ASME Code Section V, Article 23, SA 388. Surface examinations are to be performed in accordance with ASME Code Section III (Reference 3.13-1), NB-2583. NB-2585 covers UT of bolting over 2 inches nominal bolt size in which the entire cylindrical surface prior to threading is examined in accordance with SA-388 of Section V, Article 23. Any discontinuity that causes an indication over 20% of the height of the first back reflection or that prevents the production of a first back reflection of 50% of the calibration amplitude is unacceptable. NB-2586 covers UT of bolting above 4 inches nominal bolt size where such bolting is examined over the entire surface of each end before or after threading by the straight beam, longitudinal scan method. Any discontinuity that causes an indication in excess of that produced by the calibration hole in the reference specimen as corrected by the distance-amplitude curve is unacceptable. Acceptance examination of bolting are performed after the final heat treatment required by the basic material specification. Unacceptable surface defects on finished bolting (bolts, studs, and nuts) are not allowed and are cause for rejection. Weld repairs of bolting are not permitted.

- Examination Criteria for ASME Class 2 and 3 Bolting: For Class 2 and Class 3 bolting materials, only visual examination of bolts, studs, and nuts is required in accordance with NC-2581 and ND-2582. According to NC-2582 and ND-2582, such visual examinations are made on the areas of threads, shanks, and heads of final machined parts. Harmful defects and discontinuities such as laps, seams, or cracks that would be detrimental to the intended service are unacceptable.

3.13.1.4 [Reserved]

3.13.1.5 Certified Material Test Reports

The COL Applicant is to retain quality records including certified material test reports for all property test and analytical work performed on nuclear threaded fasteners in accordance with the requirements of 10 CFR 50.71 (Reference 3.13-13) (Maintenance of Records, Making of Reports). The results of bolting material chemical analyses, fabrication, and mechanical property tests in applicable certified material test reports are retained in accordance with ASME Code, Section III (Reference 3.13-1), Subsection NB, NC, and ND. The certified material test report criteria for all three classes are covered in NCA-3860 (Certification Requirements) as summarized below (Table 3.13-1):

- NCA-3861, Certification Requirements for Material Organization: The material organization whose scope of activities includes NCA-3830 (Responsibilities of Material Organizations) provides a certified material test report or certificate of

compliance, as applicable (NCA-3862), for the material. Except where certificate of compliances are acceptable, the material organization transmits all certifications required by NCA-3862.1(b), received from other material organizations, or approved suppliers to the purchaser at the time of shipment. The Certificate Holder completes all activities not completed by the material organization and provides a certified material test report for all activities performed by him or his approved suppliers.

- NCA-3862.1, Material Certification: The certified material test report includes the actual results of all required chemical analyses, tests, and examinations. Notarization of the certified material test report is not required. A certificate of compliance with the material specification, grade, class, and heat-treated condition, as applicable, may be provided in lieu of a certified material test report for bolting 1 inch and less. Material identification is described in the certified material test report or certificate of compliance, as applicable. Heat or lot traceability to the certificate of compliance is not required.

- NCA-3862.2, Quality System Program Statement: When the material organization holds a quality system certificate, its quality system certification number and expiration date are shown on the certified material test report or certificate of compliance, as applicable, or on a certification included with the documentation accompanying the material.

3.13.2 Inservice Inspection Requirements

The preservice inspection and ISI of threaded fasteners comply with the requirements of Reference 3.13-11 and the criteria of ASME Code, Section XI (Reference 3.13-14) (Rules for ISI of Nuclear Power Plant Components) for bolting and mechanical joints used in ASME Code, Class 1 and 2 systems (Reference 3.13-14). Table 3.13-2 lists the ASME Section XI (Reference 3.13-14) Examination Categories for ISI of Mechanical Joints in ASME Code, Class 1 and 2 systems that are secured by threaded fasteners. The COL Applicant is to address compliance with ISI requirements as summarized below.

The preservice and periodic ISI (visual, surface, volumetric) are required and performed in accordance with ASME Code, Section XI (Reference 3.13-14), tabulated in IWB-2500-1, for Category B-G-1 and B-G-2 for ASME Code, Class 1 systems bolting and in IWC-2500-1 for ASME Class 2 systems bolting. In addition to the above periodic ISI for bolting, during the performance of pressure tests for ASME Class 1, 2, and 3 systems pressure boundary, required by the ASME Code, Section XI (Reference 3.13-14), Article IWA-5000 (specifically, IWB-2500, IWC-2500, AND IWD-2500), if leakage occurs at a bolted joint, the bolting is removed, VT-3 visually examined for corrosion, and evaluated in accordance with IWA-3100 of the ASME Code, Section XI (Reference 3.13-14). Subsection 3.9.6 provides information relating to system pressure testing.

Under Examination Types, the Specific Bolting Inspections for ASME Class 1 bolting criteria are covered in Table IWB-2500-1, Exam Cat. B-G-1 for bolting greater than 2 inches in diameter. This table lists the following seven Parts Examined: RV; pressurizer; steam generators; heat exchangers; piping; pumps; and valves. Each of these parts includes several components to be examined. For example, the RV comprises: closure

head nuts, closure studs, threads in flange, and closure washers. For each component part, the Examination Method (visual, volumetric) is noted; acceptance standards are IWB-3517 (visual) and IWB-3515 (volumetric); and the extent and frequency of examinations listed along with a permissible deferral of examination to end of interval. For smaller Class 1 bolting (less than or equal to 2 inches in diameter), Table IWB-2500-1, Examination Category B-G-2, applies. The parts listed above are now only visually examined with the same acceptance standard (all in accordance with IWB-3517). Again, the extent and frequency of examinations are shown with the deferral of examination to end of interval not permissible.

For ASME Class 2 bolting criteria, only bolting greater than 2 inches is examined in accordance with Table IWC-2500-1, Examination Category C-D. Four parts examined are listed: pressure vessels (bolts and studs); piping (bolts and studs); pumps (bolts and studs); and valves (bolts and studs). Each of these four parts is examined by the volumetric method with IWC-3513 as the acceptance standard. When bolts or studs are removed for examination, surface examination meeting the acceptance standards of IWB-3515 may be substituted for volumetric examination. Extent of examination: 100% bolts and studs at each bolted connection of components are inspected for each inspection period. The areas chosen for the initial examination are reexamined in the same sequence over the service life of the component to the extent practical. For ASME Class 3 bolting criteria, the specific bolting inspections are not applicable. There are currently no ASME Class 3 examination categories that correspond to those that exist for ASME Code Class 1 and 2 threaded fasteners.

The COL Applicant is to commit to complying with the requirements of ASME Code, Section XI, IWA-5000 (Reference 3.13-14), and the requirements of 10 CFR 50.55a(b)(2)(xxvi) (Reference 3.13-11), Pressure Testing Class 1, 2, and 3 Mechanical Joints, and Paragraph (xxvii) Removal of Insulation for application of the ISI program for pressure testing of mechanical joints utilizing threaded fasteners. Article IWA-5000, system pressure tests, covers system test requirements, test pressurization boundaries, visual examination of insulated and non-insulated components, corrective action, and test records. If leakage occurs in insulated components in borated water systems, insulation is removed from pressure retaining bolted joints for visual examination. If leakage occurs at a bolted connection in a borated system, one of the bolts closest to the leakage is removed, visually examined, and evaluated in accordance with IWA-3100. If the removed bolt has evidence of corrosion damage, all remaining bolting in the connection is removed, visually examined, and evaluated in accordance with IWA-3100. If boric acid residues are found on components, the leakage source and areas of general corrosion are located. Components with local areas of general corrosion resulting in wall thinning by more than 10% are evaluated to determine if the component is acceptable for continued service, or whether repair/replacement actions will be performed. Any source of leakage or evidence of structural degradation is recorded and the location and corrective actions documented.

In 10 CFR 50.55a(b)(2)(xxvi) (Reference 3.13-11) Pressure Testing Class 1, 2, and 3 Mechanical Joints, the repair and replacement activity provisions in IWA-4540(c) of the 1998 Edition of Section XI (Reference 3.13-14) for pressure testing Class 1, 2, and 3 mechanical joints must be applied when using the 2001 Edition through the latest edition and addenda incorporated by reference in paragraph (b)(2) of this section. Under 10 CFR

50.55a(b)(2)(xxvii) (Reference 3.13-11) Removal of Insulation, when performing visual examinations, insulation must be removed from 17-4 PH or 410 SS studs or bolts aged at a temperature below 1,100°F or having an HRC above 30 (285 Brinell [Brinell hardness number]), and from A-286 SS studs or bolts preloaded to 100 ksi or greater.

3.13.3 Combined License Information

COL 3.13(1) *Deleted*

COL 3.13(2) *Deleted*

COL 3.13(3) *The COL Applicant is to retain quality records including certified material test reports for all property test and analytical work performed on nuclear threaded fasteners in accordance with the requirements of 10 CFR 50.71.*

COL 3.13(4) *The COL Applicant is to address compliance with ISI requirements as summarized in Subsection 3.13.2.*

COL 3.13(5) *The COL Applicant is to commit to complying with the requirements of ASME Code, Section XI, IWA-5000 (Reference 3.13-14), and the requirements of 10 CFR 50.55a(b)(2)(xxvi) (Reference 3.13-11), Pressure Testing Class 1, 2, and 3 Mechanical Joints, and Paragraph (xxvii) Removal of Insulation.*

3.13.4 References

3.13-1 ASME Boiler and Pressure Vessel Code, Section III. 2001 Edition through the 2003 Addenda, American Society of Mechanical Engineers.

3.13-2 Threaded Fasteners - ASME Code Class 1, 2, and 3, Standard Review Plan for Review of Safety Analysis Reports for Nuclear Power Plants, NUREG-0800 SRP, Section 3.13, U.S. Nuclear Regulatory Commission, Washington, D.C., March, 2007.

3.13-3 ASME Boiler and Pressure Vessel Code, Section II. 2001 Edition through the 2003 Addenda, American Society of Mechanical Engineers.

3.13-4 Materials and Inspections for Reactor Vessel Closure Studs. Regulatory Guide 1.65, U.S. Nuclear Regulatory Commission, Washington, D.C., October 1973.

3.13-5 Fracture Toughness Requirements, Domestic Licensing of Production and Utilization Facilities, Energy. Title 10, Code of Federal Regulations, Part 50, Appendix G, U.S. Nuclear Regulatory Commission, Washington, D.C.

3.13-6 Good Bolting Practices – A Reference Manual for Nuclear Power Plant Maintenance Personnel, Large Bolt Manual. Electric Power Research Institute, NP-5067, Volume I, 1987.

3.13-7 Good Bolting Practices – A Reference Manual for Nuclear Power Plant Maintenance Personnel, Small Bolt Manual. Electric Power Research Institute, NP-5067, Volume II, 1990.

3.13-8 Resolution of Generic Safety Issue 29: Bolting Degradation or Failure in Nuclear Power Plants. NUREG-1339, U.S. Nuclear Regulatory Commission, Washington, DC, June, 1990.

3.13-9 Quality Assurance Requirements for Cleaning of Fluid Systems and Associated Components of Water-Cooled Nuclear Power Plants. Regulatory Guide 1.37, Rev. 1, March, 2007.

3.13-10 Quality Assurance Requirements for Cleaning of Fluid Systems and Associated Components for Nuclear Power Plants, ASME NQA-1-1994, Part II, Subpart 2.1, American Society of Mechanical Engineers, 1994.

3.13-11 Codes and Standards, Domestic Licensing of Production and Utilization Facilities, Energy. Title 10, Code of Federal Regulations, Part 50.55a, U.S. Nuclear Regulatory Commission, Washington, D.C.

3.13-12 Nondestructive Examination, ASME Code, Section V, 2001 Edition through the 2003 Addenda, American Society of Mechanical Engineers.

3.13-13 Maintenance of Records, Making of Reports, Domestic Licensing of Production and Utilization Facilities, Energy. Title 10, Code of Federal Regulations, Part 50.71, U.S. Nuclear Regulatory Commission, Washington, D.C.

3.13-14 Rules for Inservice Inspection of Nuclear Power Plant Components, ASME Code, Section XI, 2001 Edition through the 2003 Addenda, American Society of Mechanical Engineers.

Table 3.13-1 ASME Code, Section III Criteria for Selection and Testing of Bolting Materials(1)

Code Category		ASME Class 1 Criteria	ASME Class 2 Criteria	ASME Class 3 Criteria
Material Selection		NCA-1220 and NB-2128	NCA-1220 and NC-2128	NCA-1220 and ND-2128
Material Test Coupons and Specimens for Ferritic Steel Material (Tensile Test Criteria)	Heat Treatment Criteria	NB-2210	NC-2210	ND-2210
	Test Coupons Requirements Bolting/Stud Materials	NB-2221 NB-2224	NC-2221 NC-2224.3	ND-2221 ND-2224.3
Fracture Toughness Requirements	Material to be Impact Tested	NB-2311	NC-2311	ND-2311
	Types of Impact Test	NB-2321	NC-2321	ND-2321
	Test Coupons	NB-2322	NC-2322	ND-2322
	Acceptance Standards	NB-2333	NC-2332.3	ND-2333
	Number of Impact Tests Necessary	NB-2345	NC-2345	ND-2345
	Retesting	NB-2350	NC-2352	ND-2352
	Calibration of Test Equipment	NB-2360	NC-2360	ND-2360
Examination Criteria for Bolts, Studs, and Nuts		NB-2580	NC-2580	ND-2580
Certified Material Test Report Criteria		NCA-3860	NCA-3860	NCA-3860

Note :

1. Section III paragraphs listed in this table represent those specified in the 2001 Edition of Section III.

Table 3.13-2 ASME Code, Section XI Examination Categories for Inservice Inspections of Mechanical Joints in ASME Code Class 1, 2, and 3 Systems that are Secured by Threaded Fasteners(1)

Examination Type	ASME Class 1 Criteria	ASME Class 2 Criteria	ASME Class 3 Criteria
Specific Bolting Inspections	Table IWB-2500-1, Exam. Cat. B-G-1 for bolting greater than 2 inches in diameter	Table IWC-2500-1, Exam. Cat. C-D for bolting greater than 2 inches in diameter	Not Applicable – Currently there are no examination categories that correspond to those that exist for ASME Class 1 and 2 bolting
	Table IWB-2500-1, Exam. Cat. B-G-2 for bolting less than or equal to 2 inches in diameter		
System Pressure Tests	Table IWB-2500-1, Exam. Cat. B-P	Table IWC-2500-1, Exam. Cat. C-H	Table IWD-2500-1, Exam. Cat. D-B

Note :

1. Section XI paragraphs listed in this table represent those specified in the 2001 Edition of Section XI.

APPENDIX 3A

HEATING, VENTILATION, AND AIR CONDITIONING DUCTS AND DUCT SUPPORTS

CONTENTS

Page

3A Heating, Ventilation, and Air Conditioning Ducts and Duct Supports 3A-1

3A.1 Description 3A-1

3A.1.1 Seismic Category I Ductwork.....3A-1

3A.1.2 Seismic Category II Ductwork.....3A-2

3A.2 Applicable Codes, Standards and Specifications.....3A-2

3A.3 Loads and Load Combinations.....3A-2

3A.3.1 Loads 3A-2

3A.3.2 Load Combinations.....3A-3

3A.4 Design and Analysis Procedures 3A-4

3A.4.1 Simplified Design Approach.....3A-4

3A.4.2 Detailed Design Approach 3A-4

3A.4.3 Axial Brace Spacing.....3A-4

3A.4.4 Lateral Brace Spacing 3A-4

3A.5 Structural Acceptance Criteria.....3A-5

3A.5.1 Allowable Stresses 3A-5

3A.5.2 Deflection Limitations.....3A-5

3A.6 Materials.....3A-5

3A.6.1 Thin Gauge Sheet Metal.....3A-5

3A.6.2 Cold Formed Steel Shapes.....3A-5

3A.6.3 Structural Steel Shapes 3A-6

3A.6.4 Steel Bolts.....3A-6

3A.6.5 Anchor Bolts 3A-6

3A.6.6 Welds.....3A-6

3A.7 References.....3A-6

CONTENTS

Page

TABLES

Page

Table 3A-1 Ductwork Load Combinations.....3A-8

ACRONYMS AND ABBREVIATIONS

AISC	American Institute of Steel Construction
AISI	American Iron and Steel Institute
ANSI	American National Standards Institute
ASTM	American Society for Testing and Materials
AWS	American Welding Society
FIRS	foundation input response spectra
GMRS	ground motion response spectra
HVAC	heating, ventilation, and air conditioning
SMACNA	Sheet Metal and Air Conditioning Contractors National Association
SSC	structure, system, and component
SSE	safe-shutdown earthquake

3A Heating, Ventilation, and Air Conditioning Ducts and Duct Supports

3A.1 Description

This appendix provides the methodology to qualify the structural integrity of seismic category I and seismic category II heating, ventilating, and air conditioning (HVAC) ducts and duct supports. Seismic qualification of other accessories of the HVAC system such as duct dampers, filters, fans, and heaters are part of seismic and dynamic qualification of equipment discussed in Section 3.10 and not discussed within this Appendix. Accessory loads to the duct and duct supports, however, are considered in the qualification of the duct and duct supports.

Schedule round pipe used as ductwork is outside the scope of this Appendix, and is designed in accordance with applicable piping and pipe support criteria.

In general, the design of ductwork and supports is accomplished through the following steps:

- Determine all shears, moments, and torques at critical sections of duct and supports caused by design dead, seismic, thermal, pressure, flow, vibration, and other loads, as applicable.
- Determine applicable load combinations and corresponding allowable stresses for ductwork and supports.
- Assure that maximum stresses are within allowable stresses corresponding to the applicable load combination.
- Qualify local stresses in ductwork at un-reinforced and reinforced openings.

When duct runs (synonymous with “duct subsystem”) change from seismic category I to seismic category II segments, the first two duct supports within the seismic category II boundary are designed as rigid supports capable of resisting seismic category I loadings.

Non-seismic HVAC duct and duct supports exist in non-seismic structures and as designated by system descriptions. It is not necessary for non-seismic duct and duct supports to satisfy the requirements of this appendix.

3A.1.1 Seismic Category I Ductwork

Seismic category I ductwork is designed for all applicable load combinations to maintain its structural integrity and flow capacity within specified stress limits and operability requirements. This is achieved by designing the ductwork (plate, stiffeners, fasteners, etc.) and limiting duct support spacing to maintain stresses to acceptably low levels. The seismic qualification of HVAC ducts and duct supports is to satisfy the safe-shutdown earthquake (SSE) requirements of the structure in which they are contained. Seismic category I ducts and duct supports, including support anchorages, in the US-APWR, standard plant seismic category I structures are analyzed and designed for a SSE which is equivalent to the in-structure response spectra developed from the certified seismic

design response spectra. Site-specific seismic category I structures are analyzed and designed using as a minimum the site-specific SSE developed from the site-specific ground motion response spectra (GMRS) and foundation input response spectra (FIRS).

Typically stress criteria for ductwork and supports results in selection of standard member sizes and maximum span lengths. Those HVAC systems that do not satisfy the parameters qualified for standard member sizes and maximum span lengths are designed to satisfy their specific load and operating conditions. Pressures due to flow velocity are based on the operability requirements of each HVAC system.

3A.1.2 Seismic Category II Ductwork

Seismic category II ductwork is not essential for the safe shutdown of the plant and need not remain functional during, and after, a SSE. However, such ductwork and supports must not fall or displace excessively where it could damage any seismic category I structures, systems, and components (SSCs). Seismic category II ductwork and supports, including support anchorages, are therefore analyzed and designed using the same methods and stress limits specified for seismic category I structures and subsystems in Table 3.8.4-4.

3A.2 Applicable Codes, Standards and Specifications

The design and construction of seismic category I HVAC systems conform to AG-1-2003, Code on Nuclear Air and Gas Treatment, including Addendum AG-1a and AG-1b (Reference 3A-8). Sheet metal ducts are constructed in accordance with the American National Standards Institute (ANSI)/Sheet Metal and Air Conditioning Contractors National Association (SMACNA), HVAC Duct Construction Standards – Metal and Flexible (Reference 3A-1). The American Iron and Steel Institute (AISI), Specification for the Design of Cold-Formed Steel Members (Reference 3A-2), provides the methodology for evaluating the effects of shear lag and plate buckling appropriate for this type of duct construction. Structural steel duct supports are designed and constructed in accordance with the American Institute of Steel Construction (AISC) Specification for the Design, Fabrication and Erection of Steel Safety Related Structures for Nuclear Facilities (Reference 3A-3) or AISI as applicable.

Schedule round pipe used as ductwork is not discussed within this Appendix. Codes, standards, and specifications applicable to schedule pipe is in accordance with piping and pipe support criteria in Sections 3.9 and 3.12.

3A.3 Loads and Load Combinations

3A.3.1 Loads

Supports are designed for dead, seismic, thermal loads, and airflow forces at duct elbows, as applicable. Ducts are also designed for the operational and accident pressure loads. Construction live load is considered, however, it is not present during design seismic events. In addition, any accessory loads to the duct or supports are included in the qualification of the duct and duct supports.

The following loads are applicable for the ductwork load combinations:

ADL Additional dynamic loads resulting from system excitations due to structural motion, such as that caused by safety relief valve actuation and other hydrodynamic loads due to the design basis accident (DBA), small pipe break accident (SBA), and intermediate pipe break accident (IBA).

T Load from constraint of free end displacement resulting from thermal or other movements.

DW Dead weight of equipment or ductwork including supports, stiffeners, insulation, all internally or externally mounted components or accessories, and any contained fluids.

DPD Design pressure differential, resulting in dynamic pressure loads from DBA, IBA, or SBA.

W Design wind loads due to design hurricane, design tornado, or other abnormal meteorological condition that could occur infrequently.

EL External loads applied by attached piping, accessories, or other equipment.

FML Fluid momentum loads other than those separately listed, such as the momentum and pressure forces due to fluid flow. Section SA-4211 of ASME AG-1-2003 contains additional clarification of applicable loads.

L Live loads occurring during construction and maintenance, but may also be due to snow, ponded water, and ice. As a minimum, live load is equal to a construction manload of 250 pounds applied at the mid-span of the duct, midpoint of a stiffener, or within a duct panel. When applied on a panel, the load is distributed over a 10 square inch area.

NOPD Normal operating pressure differential, taken as the maximum positive or negative pressure differential that may occur during normal plant operation, including plant startup and test conditions. Included are pressures resulting from normal airflow and damper or valve closure.

SL Seismic loads resulting from the SSE.

3A.3.2 Load Combinations

Table 3A-1 provides load combinations for ductwork. Refer to Subsection 3.8.4.3 for various load combinations applicable to seismic category I duct supports.

Seismic category II ducts and duct supports are to be qualified for the applicable SSE to assure that they do not damage any seismic category I SSCs by falling or displacing excessively under any seismic loads. Seismic category II duct supports are, therefore, qualified for the maximum seismic load combinations and associated allowable stresses as discussed in Subsection 3.8.4.3.

3A.4 Design and Analysis Procedures

Refer to Section 3.7 for seismic system analysis and qualification requirements of seismic category I and seismic category II SSCs and their supports.

3A.4.1 Simplified Design Approach

The duct and duct support designs can be simplified and performed separately. A simplified analysis is applicable when the seismic accelerations are taken as 1.5 times peak of the support attachment spectrum and the system is isolated from any rod hung seismic category II duct.

3A.4.2 Detailed Design Approach

For certain geometric and stiffness conditions, the seismic forces are more accurately analyzed for a duct subsystem, including supports. This approach is considered when (a) the duct run is 3-dimensional, (b) the duct run contains a wye fitting, (c) the duct run contains a branch tee fitting with dimensions within 6 inches of the main duct, (d) the duct run is not isolated from a rod hung category II duct, or (e) the duct and/or supports cannot be qualified using standard designs.

The detailed design approach utilizes an analytical model consisting of a duct run with multiple support points that also account for axial and lateral bracing. The subsystem is analyzed using the response spectrum analysis method for applicable operating and seismic loads, including any accessories and eccentricities that are present.

3A.4.3 Axial Brace Spacing

Axial bracing resist loads in the axial direction of a duct run. Axial braces are strategically located near directional changes in the duct run to avoid adverse load distribution due to axial effects. Unless otherwise justified by analysis, axial braces are spaced at intervals less than 50 feet for straight horizontal runs and less than 25 feet for straight vertical runs. A lateral brace on one leg of a 90-degree elbow bend can serve jointly as an axial brace to the other leg of the bend when the axial load is appropriately distributed.

3A.4.4 Lateral Brace Spacing

Lateral bracing resist loads perpendicular to the axial direction of a duct run. The lateral directions for design correspond to the two principal axes of bending for the duct cross-section. For horizontal runs, one lateral direction is horizontal, the other is vertical. For vertical runs, both lateral directions are horizontal.

In determining the placement of braces, a wall (or floor) penetration is not considered a point of lateral support except as specifically designed on a case-by-case basis and shown to have the capacity to provide support. The spacing of lateral braces is based on level of stress in the duct.

3A.5 Structural Acceptance Criteria

3A.5.1 Allowable Stresses

Allowable ductwork stresses are in accordance with AISI, Specifications for the Design of Cold-Formed Steel Structural Steel Members (Reference 3A-2) and ASME AG-1 (Reference 3A-8) Subarticles SA-4220, AA-4320 and AA-4330. Allowable ductwork support stresses are in accordance with AISC Specification for Structural Steel Buildings (Reference 3A-3) or AISI as applicable.

Allowable stress coefficients are applied in accordance with basic allowables of AISC or AISI. Refer to Subsection 3.8.4.5 for a combination of appropriate allowable stresses with the appropriate load combinations and material specifications.

3A.5.2 Deflection Limitations

Seismic category I ducts and duct supports satisfy deflection limits intended to control interface loads and flexible connector requirements. Where flexible connectors are not possible, attached accessories or commodities are designed for these deflections to prevent excessive interaction with the duct or duct support.

No specific requirements for seismic category II duct and duct supports are necessary. These components are designed not to fall during a seismic event. However, displacements are limited to prevent potential adverse interactions with adjacent commodities. Refer to Subsection 3.7.2.8 for criteria relating to seismic interaction of non-category I structures with seismic category I structures.

When HVAC ducts cross between adjacent buildings, the potential for differential movements is accommodated through flexible connectors. Differential displacements caused by seismic motion are obtained at the duct elevation using seismic analysis reports for each building.

3A.6 Materials

The principal materials for fabrication of HVAC ducts and duct supports are thin gauge sheet metal, cold formed steel shapes, and structural steel shapes.

3A.6.1 Thin Gauge Sheet Metal

Sheet metal ducts are welded constructed in accordance with ANSI/SMACNA (Reference 3A-1). The AISI (Reference 3A-2) provides an appropriate methodology for evaluating this type of duct construction.

3A.6.2 Cold Formed Steel Shapes

Cold formed steel shapes that may be used as support members satisfy the requirements specified in Reference 3A-2.

3A.6.3 Structural Steel Shapes

The design, fabrication, and installation of structural steel supports, and structural shapes and plates used in duct construction, complies with AISC (Reference 3A-3).

3A.6.4 Steel Bolts

Bolts of American Society for Testing and Materials (ASTM) A307 Type A (Reference 3A-4) with lockwashers are used for ductwork fit-up and support connections.

3A.6.5 Anchor Bolts

Anchor bolts are ASTM A307 (Reference 3A-4) or F1554 (Reference 3A-5), 36 x 1,000 pounds per square inch yield strength material. Higher strength F1554 material is used, as necessary, and noted on the design drawings. The flexibility of base plates is considered in determining the anchor bolt loads when expansion anchors are used for supports.

3A.6.6 Welds

Welding electrodes is minimum American Welding Society (AWS) E70 (References 3A-6, and 3A-7) for structural steel, and AWS E60 for sheet steel (less than or equal to 3/16th inch thick).

3A.7 References

3A-1 HVAC Duct Construction Standards – Metal and Flexible. American National Standards Institute/Sheet Metal and Air Conditioning Contractors National Association, 1995.

3A-2 North American Specification for the Design of Cold-Formed Steel structural Members. 2001 Edition and 2004 Supplement, American Iron and Steel Institute, 2001.

3A-3 Specification for the Design, Fabrication and Erection of Steel Safety Related Structures for Nuclear Facilities. AISC-N690-1994, 1994 and Supplement 2, American Institute of Steel Construction, 1994.

3A-4 Standard Specification for Carbon Steel Bolts and Studs, 60 000 PSI Tensile Strength. ASTM A307-04E1, American Society for Testing and Materials, 2004.

3A-5 Standard Specification for Anchor Bolts, Steel, 36, 55, and 105-ksi Yield Strength. ASTM F1554-04E1, American Society for Testing and Materials, 2004.

3A-6 Structural Welding Code – Steel. AWS D1.1/D1.1M:2006, American Welding Society, 2006.

3A-7 Structural Welding Code – Sheet Steel. AWS D1.3/D1.3M:2007, American Welding Society, 2007.

3A-8 Code on Nuclear Air and Gas Treatment. ASME AG-1-2003, Addendum AG-1a-2004, and AG-1b-2007, American Society of Mechanical Engineers, 2003.

Table 3A-1 Ductwork Load Combinations

Component Service Level	Load Combinations
A	*DW* + *NOPD* + *FML* + *EL* + *L* + *T* + *W*
B	Not Required
C	*DW* + *NOPD* + *FML* + *EL* + *SL* + *ADL* + *W*
D	*N* + *DPD* + *SSE* + *ADL*, Not Required Unless *DPD* is Applicable

APPENDIX 3B

BOUNDING ANALYSIS CURVE DEVELOPMENT FOR LEAK BEFORE BREAK EVALUATION OF HIGH-ENERGY PIPING FOR US-APWR

CONTENTS

Page

3B Bounding Analysis Curve Development for Leak Before Break Evaluation of High-Energy Piping for US-APWR 3B-1

3B.1 Introduction 3B-1

3B.2 LBB Evaluation Method 3B-1

3B.2.1 Applicable Conditions of LBB Concept 3B-1

3B.2.2 LBB Evaluation Method 3B-2

3B.2.2.1 Leak Rate Estimation 3B-2

3B.2.2.2 Fracture Mechanics Analysis 3B-3

3B.3 LBB Evaluation for the US–APWR 3B-11

3B.3.1 Generation of BAC 3B-13

3B.3.1.1 BAC Methodology 3B-13

3B.3.2 LBB Evaluation Procedure of Piping System Using BAC 3B-15

3B.3.2.1 Preparation of the Piping Data 3B-15

3B.3.2.2 Confirmation of Applicability of BAC Diagram 3B-15

3B.3.2.3 Calculation of LBB Evaluation Points 3B-16

3B.3.2.4 Assessment of LBB Concept 3B-18

3B.4 BAC Setting for LBB Evaluation 3B-18

3B.5 References 3B-18

TABLES

Page

Table 3B-1 Material Parameters for SA-106 Grade B at 550°F 3B-21

Table 3B-2 List of BACs for LBB Evaluation 3B-22

FIGURES

Page

Figure 3B-1 Z- Factor of SMAW and SAW 3B-23

Figure 3B-2 J-T Methodology for Stability Evaluation 3B-24

Figure 3B-3 Combination Scheme of Tension and Bending 3B-25

Figure 3B-4 Combination Scheme of Tension and Bending 3B-26

Figure 3B-5 LBB Evaluation Procedure of the U.S. Plant 3B-27

Figure 3B-6 US-APWR BAC for Primary Loop Hot Leg (SA182F316) 3B-28

Figure 3B-7 US-APWR BAC for Primary Loop Hot Leg (SA182 F316LN) 3B-29

Figure 3B-8 US-APWR BAC for Primary Loop Crossover Leg (SA182 F316) 3B-30

Figure 3B-9 US-APWR BAC for Primary Cold Leg (SA182 F316LN) 3B-31

Figure 3B-10 US-APWR BAC for Primary Loop Crossover Leg (SA182 F316LN) 3B-32

Figure 3B-11 US-APWR BAC for Primary Cold Leg (SA182 F316LN) 3B-33

Figure 3B-12 US–APWR BAC for Surge Line (Normal Operation) 3B-34

Figure 3B-13 Deleted 3B-35

Figure 3B-14 US–APWR BAC for RHRS at Hot Leg 3B-36

Figure 3B-15 US–APWR BAC for RHRS at Cold Leg 3B-37

Figure 3B-16 US-APWR BAC for Accumulator System 3B-38

Figure 3B-17 US-APWR BAC for Pressurizer Spray Line 3B-39

Figure 3B-18 US-APWR BAC for Main Steam Line 3B-40

ACRONYMS AND ABBREVIATIONS

ASME	American Society of Mechanical Engineers
BAC	bounding analysis curves
EPRI	Electric Power Research Institute
GDC	General Design Criteria
LBB	leak-before-break
MSS	main steam system
PCCV	prestressed concrete containment vessel
RCPB	reactor coolant pressure boundary
RCS	reactor coolant system
SAM	seismic anchor motion
SAW	submerged arc weld
SI	safety investigation system
SMAW	shielded metal arc weld
SRP	standard review plan
SSE	safe-shutdown earthquake
TIG	tungsten inert gas

3B Bounding Analysis Curve Development for Leak Before Break Evaluation of High-Energy Piping for US-APWR

3B.1 Introduction

Leak-before-break (LBB) evaluation of US-APWR piping follows the methodology in accordance with General Design Criteria (GDC) 4 of 10 Code of Federal Regulations of 50, Appendix A (Reference 3B-1), NUREG-0800, Standard Review Plan (SRP) 3.6.3, Rev. 1, (Reference 3B-2), and NUREG-1061, Volume 3 (Reference 3B-3). The evaluation follows the following steps.

- Evaluate potential failure mechanisms
- Perform bounding analysis

This appendix provides the development of bounding analysis curves (BACs). In this appendix, prerequisite conditions for LBB, and basic concept and evaluation equations for accepting LBB concept are described. Methods used to generate the BACs and LBB evaluation methods are presented. Last, the BACs of representative piping system are shown.

3B.2 LBB Evaluation Method

LBB evaluation of US-APWR high energy piping is conducted in accordance with GDC 4 (Reference 3B-1), SRP 3.6.3 (Reference 3B-2) and NUREG-1061, Volume 3 (Reference 3B-3).

3B.2.1 Applicable Conditions of LBB Concept

1. Purpose of the LBB evaluation

   The purpose of LBB evaluation is to demonstrate that a leak will be detected before the pipe breaks. In cases that the LBB concept is not acceptable, piping rupture is postulated (Subsection 3.6.2) and protection against the effects of pipe break for the affected safety-related structures, systems, and components relating to safety issues is required.

2. Applicability of the LBB concept

   The LBB concept is applied to austenitic stainless steel piping comprising reactor coolant pressure boundary (RCPB) and carbon steel piping of the main steam system (MSS) inside the prestressed concrete containment vessel (PCCV).

3. Postulated degradation and countermeasure

   Fatigue damage is assumed as the cracking mechanism for a postulated through-wall crack, as required by SRP 3.6.3 (Reference 3.B-2), and the measures for prevention from assumed degradation, such as stress corrosion crack on

austenitic stainless steel pipe and erosion/corrosion on carbon steel pipe, should be provided.

4. Capability of leak detection instrumentation

   For the LBB evaluation, leak detection instrumentation should be provided and controlled properly during plant operation. In accordance with SRP 3.6.3 (Reference 3B-2), the leak rate for the LBB evaluation should be set at 10 times as large as the plant leak-detection system capability.

5. Postulated crack

   A circumferential crack is assumed for all circumferential weld joint of the piping. Because the piping of US-APWR has no longitudinal weld joint, there is no need to postulate a longitudinal crack.

6. Applied load

   In the LBB evaluation, the load under normal operating condition is considered for the evaluation of the leak rate, while the maximum load due to a seismic event (or other higher loading condition) during normal plant operation is considered for fracture mechanics analysis to determine the critical flaw size.

3B.2.2 LBB Evaluation Method

The following methods are used for the LBB evaluation:

1. Estimation of leakage for the normal applied loads

2. Fracture mechanics analysis to determine critical flaw size for maximum load

3B.2.2.1 Leak Rate Estimation

The leakage though leakage flaw sizes is determined using the EPRI-developed PICEP computer program (Reference 3B-4). The program has been widely used for LBB evaluation of leakage from cracks in piping.

PICEP uses elastic-plastic fracture mechanics analysis to compute the crack opening area for through-wall cracks (Reference 3B-5). It also includes a method for calculating critical flaw sizes that is not used in the US-APWR LBB evaluation. The leakage rate calculation is based on Henry's homogeneous non-equilibrium critical flow model (Reference 3B -6) with several modifications to account for friction, turns in the flow path, and fluid conditions.

In performing the leakage evaluation, several assumptions must be made for a hypothetical crack to determine the size of a flaw that will leak at 10 times the detectable leakage rate. These represent inputs to PICEP as follows:

1. The crack opening area is computed by combining the loading due to axial forces and applied moments.

2. A plastic zone correction may be included with the elastic portion of the crack opening displacement. This is consistent with the EPRI-GE methods for elastic-plastic fracture mechanics analysis (Reference 3B-5).

3. The crack is assumed to be elliptical in shape with the inlet area equal to the exit area.

4. The assumed crack is a hypothetical though-wall circumferential crack. Since there is no credible degradation method, a fatigue crack is assumed. This is consistent with the original validation of the PICEP computer program and the accepted methods for many previously accepted LBB evaluations. For the hypothetical fatigue crack, the roughness is taken as 0.000197 inches and no turning losses are included (Reference 3B-7). These assumptions are consistent with those made at the time that SRP 3.6.3 and NUREG-1061 Volume 3 were originally published that required a factor of 10 between the calculated leakage and the plant leakage detection system detection capability to cover various uncertainties that might exist.

5. The PICEP-default sharp-edged entrance loss factor of 0.61 is used.

Using PICEP, evaluations are conducted to determine leakage crack sizes that produce leakage at a flow rate that is ten times the plant leakage detection system. This analysis is conducted for each of the normal plant operating stress levels considered on the BAC for each piping system. Normal operating pressure and temperature for the piping system being evaluated are used in the analyses.

3B.2.2.2 Fracture Mechanics Analysis

Because austenitic stainless steel has high fracture toughness, the limit load methodology can be applied to evaluate piping fracture behavior. On the other hand, in the case of carbon steel, elastic plastic fracture mechanics is applied for crack stability analysis due to relatively lower fracture toughness.

1. Austenitic stainless steel

   Modified limit load methodology (Reference 3B-2) is used for fracture mechanics analysis of austenitic stainless steel piping.

a. Master curve relation between *SI* and *L*

$$SI = S_b + M \cdot P_m \quad \text{(3B.2.2.2-1)}$$

$$L = 2\theta R \quad \text{(3B.2.2.2-2)}$$

$$S_b = \frac{2\sigma_f}{\pi}\left(2\sin\beta - \sin\theta\right) \quad \text{(3B.2.2.2-3)}$$

$$\beta = \frac{1}{2}\left(\pi - \theta - \pi\frac{P_m}{\sigma_f}\right) \quad \text{(3B.2.2.2-4)}$$

$$if \quad \theta + \beta > \pi$$

$$S_b = 2\sigma_f\left(\sin\beta\right)/\pi \quad \text{(3B.2.2.2-5)}$$

$$\beta = -\pi\left(P_m/\sigma_f\right) \quad \text{(3B.2.2.2-6)}$$

where

SI = Stress index

P_m = Membrane stress

S_b = Load Limit bending stress

M = Margin:

1 in the case of absolute sum load combination method

1.4 in the case of algebraic sum method of load combination

L = Total crack length of a circumferential through-wall crack

θ = Half crack angle

R = Mean radius

β = Neutral angle

σ_f = Flow stress

b. *SI* and σ_f in the cases of base metal and tungsten inert gas (TIG) weld

$$SI = M\left(P_b + P_m\right) \quad \text{(3B.2.2.2-7)}$$

$$\sigma_f = \left(\sigma_y + \sigma_u\right)/2 \quad \text{(3B.2.2.2-8)}$$

where

P_b = Primary bending stress

σ_y = Yield stress

σ_u = Ultimate strength

Alternatively, the flow stress shown below may be applied.

σ_f = 51 ksi, where $SI/17M < 2.5$

σ_f = 45 ksi, where $SI/17M \geq 2.5$

c. *SI* and σ_f in the cases of shielded metal arc weld (*SMAW)* and submerged arc weld (*SAW*) are expressed in the following equations. *Z* factors of both welds are shown in Figure 3B-1.

$$SI = M\left(P_m + P_b + P_e\right)Z \quad \text{(3B.2.2.2.3-9)}$$

$$Z = 1.15\left[1.0 + 0.013\left(OD - 4\right)\right] \quad \textit{for SMAW} \quad \text{(3B.2.2.2.3-10)}$$

$$Z = 1.30\left[1.0 + 0.010\left(OD - 4\right)\right] \quad \textit{for SAW} \quad \text{(3B.2.2.2.3-11)}$$

σ_f = 51 ksi

where

P_e = Combined secondary stresses, including those due to thermal expansion at normal operation and seismic anchor motion (SAM)

OD = Pipe outer diameter (inch)

d. In the case that yield and tensile stresses are not known, the stress values from American Society of Mechanical Engineers (ASME) Code, Section II (Reference 3B-8) may be used (Reference 3B-2). In this document, flow stress is conservatively determined by the following equation using the minimum allowable stress values S_y and S_u from the ASME Code at the temperature of the conditions being evaluated. The values so determined are less than the 51ksi and 45 ksi values allowed in SRP 3.6.3.

$$\sigma_f = S_f = \left(S_y + S_u\right)/2 \quad \text{(3B.2.2.2-12)}$$

e. The equations mentioned above are utilized as follows to determine critical flaw size. The master curve relation between *SI* and *L* is drawn using Equations 3B2.2.2.3-1 through 3B2.2.2.3-6. *SI* is obtained from Equations 3B2.2.2.3-7 through 3B2.2.2.3-11 depending on the welding process, and the critical crack length is calculated by using the relation curve between *SI* and *L*.

SRP 3.6.3 (Reference 3B-2) requires that the calculated critical crack length shall be more than twice as large as the critical detectable crack length.

2. Carbon steel

J-Integral Tearing-Instability (J-T) methodology is used for fracture mechanics analysis of the main steam piping made of carbon steel.

J-T methodology is one of elastic-plastic fracture mechanics evaluation method. This is described in NUREG-1061 (Reference 3B-3) and in SRP 3.6.3 (Reference 3B-2). The critical load at instability is derived using J resistance (J-R) curve from materials testing and calculated J-integral for applied load. Tearing modulus *T* is obtained from the following equation.

$$T = \frac{E}{(\sigma_f)^2}\frac{dJ}{da} \qquad \text{(3B.2.2.2-13)}$$

where

E: Young's modulus

σ_f: flow stress

J: J-integral from J-R curve

a: crack length

Figure 3B-2 illustrates the J-T methodology for stability evaluation. The $(J\text{-}T)_{mat}$ curve is derived from the material property J-R curve. The $(J\text{-}T)_{app}$ curve is drawn from the calculated J-integral with crack length as a parameter and applied load (fixed value). An intersection point of the $(J\text{-}T)_{mat}$ curve and $(J\text{-}T)_{app}$ curve denotes the instability point. The critical load at instability can be determined from the J versus load curve with the certain crack extension at instability.

In this document, the J integral value for the applied load J_{app} is calculated using the simplified EPRI/GE J calculation methods (Reference 3B-5 and 3B-9). This method gives the estimation formulas of J-integral for a pipe with a circumferential through-wall crack subjected to pure tension or pure bending by approximating the stress-strain curve using the Ramberg-Osgood relation.

1. Tension

$$
\begin{aligned}
J_m &= \left(J_e + J_p\right)_m \\
J_e &= K_m{}^2 / E \\
J_p &= \alpha\sigma_0\varepsilon_0 c h_m \left(P/P_0\right)^{n+1} \\
P_0 &= 2\sigma_0 R t\left[\pi - \theta - 2\sin^{-1}\left(0.5\sin\theta\right)\right]
\end{aligned}
\qquad (3B.2.2.2\text{-}14)
$$

2. Bending

$$
\begin{aligned}
J_b &= \left(J_e + J_p\right)_b \\
J_e &= K_b{}^2 / E \\
J_p &= \alpha\sigma_0\varepsilon_0 c h_b \left(M/M_0\right)^{n+1} \\
M_0 &= 4\sigma_0 R^2 t\left[\cos\left(\theta/2\right) - 0.5\sin\theta\right]
\end{aligned}
\qquad (3B.2.2.2\text{-}15)
$$

where

J_e = elastic component of *J*-integral

J_p = plastic component of *J*-integral

K = stress intensity factor

E = Young's modulus

θ = crack half angle

R = pipe mean radius

t = thickness

P = axial load

M = bending moment

$\alpha, n, \varepsilon_0, and\ \sigma_0$ = parameters in Ramberg-Osgood stress-strain relation

$$\left(\varepsilon/\varepsilon_0\right) = \left(\sigma/\sigma_0\right) + \alpha\left(\sigma/\sigma_0\right)^n$$

$h_m\ and\ h_b$ = coefficients for axial load and bending moment

2c = is the remaining circumferential ligament of the cracked portion of the pipe

where, *T* is expressed as a difference equation, Equation B2.2.2.3-12 changes as follows:

$$T = \frac{E}{(\sigma_f)^2}\frac{dJ}{da} = \frac{E}{(\sigma_f)^2}\frac{\Delta J}{\Delta a} \qquad \text{(3B.2.2.2-16)}$$

Since the EPRI/GE J-estimation procedures are for tension or bending, the critical crack length for a combination of membrane and tensile stress are determined by a linear interaction rule as depicted in Figure 3B-3 and is expressed as the following:

$$a_c = \frac{\sigma_t}{(\sigma_t + \sigma_b)} a_{c,t} + \frac{\sigma_b}{(\sigma_t + \sigma_b)} a_{c,b} \qquad \text{(3B.2.2.2-17)}$$

where

a_c = critical crack length in a combination of tension and bending

σ_t = applied membrane stress

σ_b = applied bending stress

$a_{c,t}$ = critical crack length for a tension stress of $\sigma_t + \sigma_b$

$a_{c,b}$ = critical crack length for a bending stress of $\sigma_t + \sigma_b$

In the case of loading control condition, lower stress-strain curve gives larger applied *J* (J_{APP}). On the other hand generally larger strength material has lower fracture toughness. This relation is suitable for base metal and weld metal of carbon steel. Therefore, in the evaluation, stress-strain curve of the base metal and the J-R curve of the weld metal are applied for conservativeness.

Material of the main steam pipe is planned as SA-106 Grade B. The material data is to be obtained from the same material to be used, but has not been produced yet. Thus, a conservative approach is used to perform the analysis, and required fracture toughness properties will be provided to suppliers to assure that material properties will meet the requirements described herein.

In performing the fracture mechanics analysis, the stress strain curve can be fit based on ASME Code minimum properties to determine the Ramberg-Osgood material parameters using the approach:

$$\frac{\varepsilon}{\varepsilon_0} = \frac{\sigma}{\sigma_0} + \alpha\left[\frac{\sigma}{\sigma_0}\right]^n \qquad \text{(3B.2.2.2-18)}$$

Here σ and ε are the true stress and true strain, σ_o and ε_o are the reference stress and reference strain (that may be taken as yield stress and yield strain or any other consistent values) and α and n are the Ramberg-Osgood (R-O) parameters.

If a stress-strain curve at the temperature of interest were available, the R-O parameters could be obtained by curve fitting over the strain range of interest. In the absence of the actual stress-strain curve of the material, a methodology for determining the R-O parameters based on ASME Code minimum-specified mechanical properties is used (Reference 3B-10). The parameters are determined by using a material 0.2% offset yield strength as σ_o and the following equations:

$$\alpha \approx \frac{0.002}{e_y} \qquad \text{(3B.2.2.2-19)}$$

$$n = \frac{\ell n\left[\frac{1}{\alpha}\left(\frac{\ell n(1+e_u)}{\ell n(1+e_y)}\right) - \frac{S_u(1+e_u)}{S_y(1+e_y)}\right]}{\ell n\left[\frac{S_u(1+e_u)}{S_y(1+e_y)}\right]} \qquad \text{(3B.2.2.2-20)}$$

where S_u and S_y represent Code minimum ultimate stress and yield stress, respectively, that can be obtained from Section II of the ASME Code (Reference 3B-2) as a function of temperature. The yield strain (e_y) is determined as:

$$e_y = \frac{S_y}{E} \qquad \text{(3B.2.2.2-21)}$$

where E (modulus of elasticity) can also be obtained from the ASME Code. The ultimate strain (e_u) is not specified as a function of temperatures in the ASME Code, hence the room temperature minimum elongation value from the ASME Section II properties for SA-106 Grade B is assumed for all temperatures, since the methodology is not very sensitive to the choice of e_u when determining α and n by using the equations above.

The choice of the R-O parameters based on either yield strength or flow stress does not change the prediction of the plastic portion of the J-Integral using the EPRI/GE EPFM estimation equations (References 3B-5 and 3B-9) since the stress strain curve is identical in either case. This is why a reference stress nomenclature is used. The elastic portion of

the J-Integral is affected however, with lower values of reference stress increasing the computed elastic J-Integral since a plastic zone correction is made. In NUREG/CR-6540 (Reference 3B-11) and NUREG/CR-6235 (Reference 3B-12), it was stated that more recent work by Battelle had not used the plastic zone correction at all, since the effect of the plastic zone correction is inherently included in the plastic J-Integral calculation. Thus, it is acceptable to use the higher flow stress in determining the RO parameters as there is still some contribution due to the elastic J-integral. The Ramberg-Osgood parameters based on the flow stress (α_{flow}, ε_{flow}) may be determined from those above based on the yield stress (α_y, ε_y) by using the following equations:

R-O Coefficient: $\alpha_{flow} = \alpha_y (\sigma_{flow} / \sigma_y)^{n-1}$

R-O Exponent: $n_{flow} = n_{yield}$

Material of the main steam pipe is planned to be SA-106 Grade B. The specific material data to be used for the fracture mechanics evaluations, as specified in SRP 3.6.3, are not yet available. Thus, ASME Code minimum properties based on ASME Section II, Part D were used. An approach has been developed whereby the fracture properties for the base metal and welding will be specified to the piping supply vendor and welding contractor to assure that the BAC provided herein will be met. This is a suitable alternate to testing of typical material that may or may not be similar to that procured.

As part of this evaluation, a set of material properties have been assumed that will provide sufficient margin for determination of the main steam line BAC, and that can be obtained in the procurement process. The required material property is the J-resistance (JR) curve ($J = C\Delta a^m$) for the base metal and the weld metal. The test procedure requires the following as a supplemental requirement for material procurement and welding material/proccess qualification:

1. Testing shall be conducted to determine the JR curve for the base material and weld material. All testing shall be conducted at a test temperature between 535ºFand 550ºF to bound the main steam line temperature. The test specimens will be slightly less than the pipe material thickness, to accommodate specimen machining. The number of tests will depend on the heats of material to be provided and will be consistent with NUREG-1061 Volume 3 Appendix A Table A-1.

2. Using material tensile testing at the same temperature, the yield strength and ultimate tensile strength shall be determined. The flow stress shall be determined as the average of the yield and ultimate tensile strength. The ratios of the yield strength and flow stress to those based on minimum Code values at this temperature shall be determined. The minimum of the ratios so determined for the flow stress and the yield stress for the base material shall be denoted as the stress factor (SF).

3. The material C and m parameters ($J = C\Delta a^m$) to provide a reasonable lower fit to the JR curves for the base metal and weld material heats shall be established.

4. The required J-T curves, with T based on ASME Code values of modulus of elasticity and flow stress based on Code minimum yield and tensile strengths at 550ºF, are shown in Figure 3B-4. These curves are provided for the range of expected stress factor (SF) as determined in (2) above between 1.1 and 1.6.

5. Based on the actual testing of the base material and the weld materials, a J-T curve based on the lower bound *C* and *m* of the base material and weld material testing is derived. The curve is developed by performing extrapolation to no more than twice the valid J-Integral for the testing, as described in NUREG-1061, Volume 3, Appendix A. Similar to the required J-T curves in Figure 3B-4, the tearing modulus (*T*) shall be based on Code modulus of elasticity and minimum strength properties at 550ºF.

Provided that the J-T curve determined in item (5) above exceeds the required J-T curve of (4), then the material will satisfy the BAC requirements developed in this document.

The required J-resistance curve relationship has been established based on the use of ASME Code modulus of elasticity and minimum strength properties at 550ºF in the fracture mechanics analysis. Review of the curves against actual test data from the literature (e.g. Appendix B of NUREG/CR-6004 [Reference 3B-13] and Pipe Fracture Encyclopedia, Test Data – Volume 3 [Reference 3B-14]) has shown that the J-T curves should be achievable. However, there is limited valid test data for material representative of the main steam line and its thickness.

It has been established that higher stress factors (and the associated lower J-T curves) will produce essentially equivalent results at the lower normal stress part of the BAC curves, and use of higher strength materials produce slightly higher BAC curves at higher stresses. Thus, use of Code minimum properties in establishing the BAC is conservative.

3B.3 LBB Evaluation for the US–APWR

The LBB evaluation method applied is briefly described below in accordance with SRP 3.6.3 (Reference 3B-2).

In the LBB concept, it is necessary to detect a leak at normal operation to prevent the piping system from failure at the postulated maximum load. Therefore, both the stress under normal operation and the maximum load are required for evaluation.

1. Applied load

   a. Load under normal operation

      The evaluation of crack opening area for the estimation of the leak rate is conducted using the stress under normal full power plant operation. The load is produced by internal pressure, dead weight, and thermal expansion.

$$F = F_{DW} + F_{Th} + F_P \quad \text{(3B.3-1)}$$

$$M = \sqrt{\left((M_X)^2 + (M_Y)^2 + (M_Z)^2\right)}$$

$$M_X = (M_X)_{DW} + (M_X)_{Th} \quad \text{(3B.3-2)}$$

$$M_Y = (M_Y)_{DW} + (M_Y)_{Th}$$

$$M_Z = (M_Z)_{DW} + (M_Z)_{Th}$$

where

F = Axial force

M = Bending moment

The subscripts indicate the following loads

DW =Dead weight

Th = Thermal expansion

P = Internal pressure

x,y,z = Component of x, y, and z direction.

b. The maximum applied load

In order to assess the LBB, it is needed to assure that no failure of the cracked structure occurs when the postulated maximum load is applied. Loads considered are pressure, deadweight, and thermal load under normal operation, plus seismic loads. For the pressurizer surge line, maximum stratified loading conditions that occur during heatup with the maximum temperature differential between the pressurizer and the hot leg are considered as an alternate case.

The margin for the load is set at 1.0 for the US-APWR, as the load combination is calculated by the absolute sum of the components.

$$|F| = |F_{DW}| + |F_{Th}| + |F_P| + |F_{SSE}| + |F_{SAM}| \quad \text{(3B.3-3)}$$

$$|M| = \sqrt{\left((M_X)^2 + (M_Y)^2 + (M_Z)^2\right)} \quad \text{(3B.3-4)}$$

$$M_X = |(M_X)_{DW}| + |(M_X)_{Th}| + |(M_X)_{SSE}| + |(M_X)_{SAM}|$$

$$M_Y = |(M_Y)_{DW}| + |(M_Y)_{Th}| + |(M_Y)_{SSE}| + |(M_Y)_{SAM}|$$

$$M_Z = |(M_Z)_{DW}| + |(M_Z)_{Th}| + |(M_Z)_{SSE}| + |(M_Z)_{SAM}|$$

The additional subscripts indicate the following loads.

SSE = Inertia load due to safe-shutdown earthquake (SSE)

SAM = Seismic anchor motion load due to SSE

In the case of TIG welds in austenitic stainless steel piping, the loading contributions due to the secondary stresses due to thermal expansion and seismic anchor movements may be omitted. For SMAW welds in austenitic stainless steel piping, the stresses must be multiplied by the *Z* factor from Equations B2.2.2-10 or B2.2.2-11.

2. Safety factor

The safety factors required for the LBB evaluation of the US-APWR by the Reference 3B-2 are associated with the following items.

i. Predicted leak rate ten times as large as detectable leak rate

ii. Critical crack length/leakage crack length $\geqq$ 2

iii. Safety factor for the maximum load M = 1 since loads are combined by the absolute sum method

The leak detection system for US-APWR is designed to detect a leak rate of 0.5 gpm. Consequently, the leak rate for the LBB evaluation is at least 5 gpm based on Item i mentioned above.

LBB evaluation procedure to satisfy the above three safety factors is shown in Figure 3B-5. The procedure is as follows:

a. Obtain the leakage crack length L_L corresponding to the applied loads under normal operation that produces 5 gpm leakage.

b. For a critical crack length L_C that is twice L_L determine the maximum applied loads that can be accommodated.

c. If actual applied loads are less than the maximum applied loads that can be accommodated, then the location is acceptable from the LBB standpoint.

All analyzed locations in a piping system (including all welds) must meet these requirements for the system to be qualified for LBB.

3B.3.1 Generation of BAC

3B.3.1.1 BAC Methodology

The BAC methodology is an LBB assessment diagram (Reference. 3B-3) used to satisfy the three safety factors identified in the previous section. In the BAC diagram, the normal stress $\sigma_{nor,}$ that is the sum of the membrane stresses and the bending stresses during

normal plant operation, is plotted along the abscissa. The maximum stress $|\sigma_{max}|$, that is the absolute sum of the membrane stresses and the bending stresses that may be accommodated, is plotted along the ordinate. Based on evaluation of a number of normal operating stress conditions, the plotting procedure on the diagram is as follows:

Item 1 Determine the leakage crack length with a leak rate 10 times as large as the detectable leak rate by applying abscissa's stress $\sigma_{nor} = P_m + P_b$.

Item 2 Calculate the critical crack length that is twice as long as the leakage crack length obtained from item 1

Item 3 Obtain the allowable maximum stress $|\sigma_{max}|$ that can be accommodated by performing fracture mechanics analysis based on the critical crack length.

Item 4 Draw the BAC by connecting the points defined by the $|\sigma_{max}|/\sigma_{nor}$ evaluation pairs on the diagram.

The area below the BAC represents the leak mode that above the BAC represents a failure mode.

In the LBB evaluation of US-APWR piping systems, the BAC is drawn following this approach. The minimum normal operating stress point A is Case 1 and the maximum point B is Case-2. Seven intermediate points along the abscissa are chosen by equal division of abscissa points between point A and B. For each point, the maximum allowable stresses are calculated. The BAC is drawn by connecting these points. The more detailed procedure is described below.

Case 1 The minimum normal stress case

(1) Calculate the membrane stress P_m due to the internal pressure under normal operation.

(2) Set $P_b = 0$ for bending stress (in case of J-T methodology, set $P_b \sim 0$). The stress sum is equal to σ_{nor}.

(3) Calculate the crack length L_L that produces a leak rate 10 times as large as the detectable leak rate under the loads of (1) and (2).

(4) Obtain the critical maximum stress $|\sigma_{max}|$ that may be accommodated for a flaw length, twice as long as the crack length of (3).

(5) Plot the stress P_m due to internal pressure along the abscissa and plot critical maximum stress $|\sigma_{max}|$ along the ordinate.

Case 2 The maximum normal stress case

(1) Define an arbitrary high normal operating stress σ_{nor} of 50 ksi that includes the normal membrane stresses, P_m.

(2) Calculate the crack length L_l that produces a leak rate 10 times as large as the detectable leak rate under the loads of (1).

(3) Obtain the critical maximum stress $|\sigma_{max}|$ that may be accommodated for a flaw length twice as long as the crack length of (2).

(4) Plot the stress evaluated in (1) along the abscissa and plot critical maximum stress $|\sigma_{max}|$ along the ordinate.

(5) Intermediate points are evaluated in a manner consistent with Case 2 by equally spacing the interval between the Case 1 and Case 2 normal stress points.

Intermediate points are evaluated in a manner consistent with Case 2 by equally spacing the interval between the Case 1 and Case 2 normal stress points.

3B.3.2 LBB Evaluation Procedure of Piping System Using BAC

3B.3.2.1 Preparation of the Piping Data

Accumulate the following information before starting LBB evaluation.

a. Postulated degradation of the subject piping system and the countermeasures

b. Piping outer diameter and thickness and pipe material

c. Temperature and fluid pressure under normal operation in the piping system

d. Minimum wall thickness at the weld counterbore

e. Welding procedure applied to the piping system

f. Material property

   1. Stainless piping: Yield stress, tensile strength at temperature

   2. Carbon steel piping: Stress-strain curves of the base metal at temperature and J-R curves of weld metal

g. Load applied under normal operation (internal pressure, deadweight, and thermal expansion)

h. Load applied under most severe loading conditions (involving internal pressure, deadweight, thermal expansion, and earthquakes)

3B.3.2.2 Confirmation of Applicability of BAC Diagram

a. Confirm the applicability of the LBB concept to fatigue crack; that is, measures for other than fatigue damage have been already considered.

b. Confirm that input conditions such as the material, temperature and internal pressure under normal operation used for producing the BAC agree with those of the LBB assessment.

c. Verify that the minimum wall thickness is thinner than the wall thickness at producing the BAC.

d. Verify that the material constants used for producing the BAC are more conservative than those of the operational plant.

3B.3.2.3 Calculation of LBB Evaluation Points

The stress under normal operation along the abscissa and the stress under the maximum load along the ordinate should be calculated.

a. Calculation of the stress along the abscissa under normal operation

1. Calculate the algebraic sum of the axial force, the bending and torque moment due to deadweight, the internal pressure, and the thermal expansion.

$$F = F_{DW} + F_{Th} + F_P$$
$$M = \sqrt{\left((M_X)^2 + (M_Y)^2 + (M_Z)^2\right)}$$
$$M_X = (M_X)_{DW} + (M_X)_{Th}$$
$$M_Y = (M_Y)_{DW} + (M_Y)_{Th}$$
$$M_Z = (M_Z)_{DW} + (M_Z)_{Th}$$

where

F	=	Axial force
M	=	Bending moment Subscripts indicate the loads shown below
DW	=	Deadweight
Th	=	Thermal expansion
P	=	Internal pressure

x, y and *z*=Component of x, y and z direction.

2. Calculate the cross sectional area *A* and the section modulus *Z* assuming the minimum wall thickness.

3. Calculate the stress σ_{nor} at the evaluating point under normal operation.

$$\sigma_{nor} = P_m + P_b = F/A + M/Z$$

b. Calculation of the maximum stress under the maximum load along the ordinate

1. Calculate the absolute sum of the axial force, the bending and torque moment due to deadweight, the internal pressure, the thermal expansion, and earthquake using the following equations. The loading contributions due to thermal expansion and seismic anchor movements may be omitted for TIG welds in stainless steel piping.

$$|F| = |F_{DW}| + |F_{Th}| + |F_P| + |F_{SSE}| + |F_{SAM}|$$
$$|M| = \sqrt{\left((M_X)^2 + (M_Y)^2 + (M_Z)^2\right)}$$
$$M_X = |(M_X)_{DW}| + |(M_X)_{Th}| + |(M_X)_{SSE}| + |(M_X)_{SAM}|$$
$$M_Y = |(M_Y)_{DW}| + |(M_Y)_{Th}| + |(M_Y)_{SSE}| + |(M_Y)_{SAM}|$$
$$M_Z = |(M_Z)_{DW}| + |(M_Z)_{Th}| + |(M_Z)_{SSE}| + |(M_Z)_{SAM}|$$

where subscripts indicate the following loads.

SSE = Inertia load due to SSE

SAM = Seismic anchor motion load due to SSE.

2. Calculate stress under the maximum load $|\sigma_{max}|$ at the relevant points considering the weld *Z*- factor of the weld joint.

$$|\sigma_{\max}| = (|P_{m_\max}| + |P_{b_\max}|) \cdot Z = (|F|/A + |M|/Z) \cdot Z_z$$

where

A = Pipe metal area based on minimum thickness

Z_z = *Z*- factor

= 1 for carbon steel weld material or TIG welds of stainless steel base material

= 1.15[1.0+0.013 (*OD*-4)]for *SMAW* welds in stainless steel piping

OD = Pipe outer diameter (inch).

3B.3.2.4 Assessment of LBB Concept

To compare the piping stresses to the BAC curves, the normal operating stress and the maximum stresses must be determined for all analyzed locations (including all welds) in the piping system. Examples of LBB evaluations are provided in Technical Reports MUAP-09010 (Reference 3B-15), MUAP-09013 (Reference 3B-16) and MUAP-11003 (Reference 3B-17).

1. Assessment points (σ_{nor},$|\sigma_{max}|$) are plotted on the BAC diagram for all locations in a piping system.

2. If the assessing point falls below the BAC, the detection of leakage before rupture is possible and then the LBB concept can be applied.

When specifically conducting LBB evaluation on the US-APWR utilizing the BAC diagrams, the following attention should be noted.

a. The wall thickness used in determining the BAC is different than that used in the piping assessment. The BAC is based on the nominal wall thickness and not the minimum wall thickness. The nominal wall thickness provides conservative results, since for the greater wall thickness, there will be less leakage. However, in the LBB assessment, the evaluation should be conducted utilizing the minimum wall thickness, since the thinner the wall will result in higher calculated stresses under the maximum applied load.

b. In the case of *SMAW* welding for stainless steel, the maximum load must be multiplied by the *Z*-factor for the specific pipe size because the fracture toughness value is lower compared to the base metal or TIG welding.

3B.4 BAC Setting for LBB Evaluation

Table 3B-2 lists the piping system selected for development of BACs. The detailed BACs are shown in Figures 3B-6 through Figure 3B-18.

3B.5 References

3B-1 General Design Criteria for Nuclear Power Plants, Domestic Licensing of Production and Utilization Facilities, Energy. Title 10, Code of Federal Regulation, Part 50, Appendix A, U.S. Nuclear Regulatory Commission, Washington, D.C.

3B-2 Leak-Before-Break Evaluation Procedures, Design of Structures, Components, Equipment, and Systems, Standard Review Plan for the Review of Safety Analysis Reports for Nuclear Power Plants. NUREG-0800, SRP 3.6.3, Rev. 1, U.S. Nuclear Regulatory Commission, Washington, DC, March 2007.

3B-3 Evaluation of Potential for Pipe Breaks, Report of U.S. NRC Piping Review Committee. NUREG-1061, Vol. 3, U.S. Nuclear Regulatory Commission, Washington, DC, 1984.

3B-4 PICEP: Pipe Crack Evaluation Program. NP-3596-SR, Rev. 1, Electric Power Research Institute, 1987.

3B-5 Advances in Elastic-Plastic Fracture Mechanics. NP-3607, Final Report, Electric Power Research Institute, 1984.

3B-6 Henry, R.E., The Two-Phase Critical Discharge of Initially Saturated or Subcooled Liquid. Nuclear Science and Engineering, Vol. 41, pp.336-342, 1970.

3B-7 Calculation of Leak Rates Through Cracks in Pipes and Tubes. NP-3395, Electric Power Research Institute, 1983.

3B-8 Part D Properties, American Society of Mechanical Engineers, ASME Boiler and Pressure Vessel Code, Section II, 2001 (Addenda 2003).

3B-9 Elastic-Plastic Fracture Mechanics Analysis of Through-Wall and Surface Flaws in Cylinders. NP-4496, Final Report, Electric Power Research Institute, 1988.

3B-10 Cofie, N.G., Miessi, G.A., and Deardorff, A.F., Stress-Strain Parameters in Elastic-Plastic Fracture Mechanics, Transactions of the 10th International Conference on Structural Mechanics in Reactor Technology, Volume L – Inelastic Behavior of Metals and Constitutive Laws of Materials, pp 91-96, 1989.

3B-11 State of the Art Report on Piping Fracture Mecolmhanics, NUREG/CR-6540, U.S. Nuclear Regulatory Commission, November 1997.

3B-12 Assessment of Short Through-Wall Circumferential Cracks in Pipe, NUREG/CR-6235, U.S. Nuclear Regulatory Commission, April 1995.

3B-13 Probabilistic Pipe Fracture Evaluations for Leak-Rate Detection Applications. NUREG/CR-6004, U.S. Nuclear Regulatory Commission, April 1995.

3B-14 Pipe Fracture Encyclopedia, Test Data – Volume 3, U.S. Nuclear Regulatory Commission, December 1997.

3B-15 Summary of Stress Analysis Results for the US-APWR Reactor Coolant Loop Piping, MUAP-09010, P and NP, Rev. 3, Mitsubishi Heavy Industries, Ltd., March 2011.

3B-16 Summary of Stress Analysis Results for the US-APWR Main Steam Piping Inside Containment Vessel, MUAP-09013, P and NP, Rev. 2, Mitsubishi Heavy Industries, Ltd., March 2011.

3B-17 Summary of Stress Analysis Results for the US-APWR Pressurizer Surge Line, MUAP-11003, P and NP, Rev. 1, Mitsubishi Heavy Industries, Ltd., March 2011.

Table 3B-1 Material Parameters for SA-106 Grade B at 550°F

Parameter	Value
Modulus of Elasticity, ksi	27,000
Minimum S_y, ksi	27.65
Minimum S_{ult}, ksi	60.0
Minimum Flow Stress S_{flow}, ksi	43.825
α_y (based on yield stress)	1.953
α_{flow} (based on flow stress)	10.719
n	4.697

Table 3B-2 List of BACs for LBB Evaluation

No.	System	Subsystem	Line No(s)	Nominal Diameter (Inches)	Outside Diameter (Inches)	Thickness (Inches)	Material	Temp (°F)(1)	Pressure (psig)(1)	Inside Pipe		BAC Figure No.
										Water	Vapor	
1	RCS	Primary Loop Hot Leg	31"ID-RCS-2501R A,B,C,D	31ID	37.12	3.06	SA182 F316	615	2248	X		Figure 3B-6
2	RCS	Primary Loop Hot Leg	31"ID-RCS-2501R A,B,C,D	31ID	37.12	3.06	SA182 F316LN	615	2248	X		Figure 3B-7
3	RCS	Primary Loop Crossover Leg	31"ID-RCS-2501R A,B,C,D	31ID	37.12	3.06	SA182 F316	551	2204	X		Figure 3B-8
4	RCS	Primary Loop Cold Leg	31"ID-RCS-2501R A,B,C,D	31ID	37.12	3.06	SA182 F316	551	2296	X		Figure 3B-9
5	RCS	Primary Loop Crossover Leg	31"ID-RCS-2501R A,B,C,D	31ID	37.12	3.06	SA182 F316LN	551	2204	X		Figure 3B-10
6	RCS	Primary Loop Cold Leg	31"ID-RCS-2501R A,B,C,D	31ID	37.12	3.06	SA182 F316LN	551	2296	X		Figure 3B-11
7	RCS	Surge Line(2)	16"-RCS-2501R B	16	16	1.594	SA-312 TP316	653	2248(2)	X		Figure 3B-12
8												Figure 3B-13 (deleted)
9	RCS	Residual Heat Removal System (RHRS) Hot Leg Branch Line off RCS	10"-RCS-2501R A,B,C,D, Hot Leg Side	10	10.75	1.125	SA-312 TP316	615	2248	X		Figure 3B-14
10	RCS	RHRS Cold Leg Branch Line off RCS	8"- RCS -2501R A,B,C,D (COLD LEG)	8	8.625	0.906	SA-312 TP316	551	2296	X		Figure 3B-15
11	SIS	Accumulator System	14"-RCS-2501R A,B,C,D	14	14	1.406	SA-312 TP316	551	2296	X		Figure 3B-16
12	RCS	Pressurizer Spray Line(3)	6"-RCS-2501R B,C	6	6.625	0.719	SA-312 TP316	551	2296(3)	X		Figure 3B-17
13	MSS	Main Steam Line	32"-MSS-1532 A,B,C,D	32	32	1.496	SA-106 Gr.B	535	907		X	Figure 3B-18

Notes:
1. Conditions from Reactor Coolant System DCD, Table 5.1-2.
2. Use conservative lower 2243 psig for leakage which is the pressurizer end pressure.
3. Use conservative higher 2296 psig condition of cold leg for critical flaw sizing and 2235 psig for leakage based on upper portion connected to pressurizer steam space

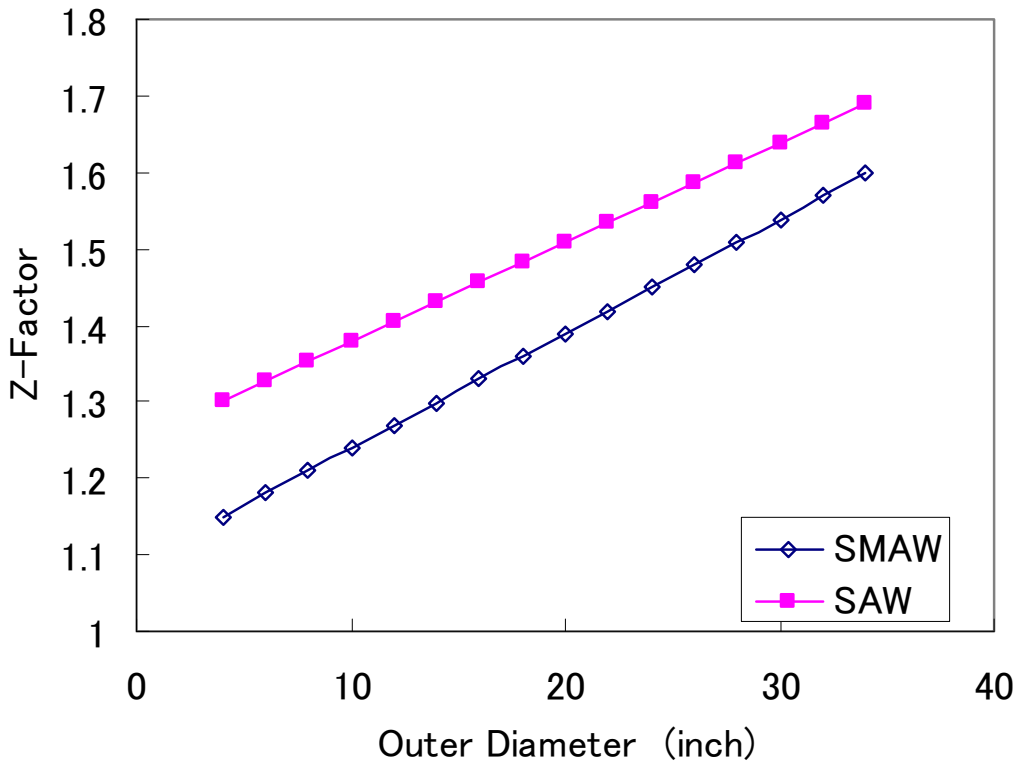

Figure 3B-1 Z- Factor of SMAW and SAW

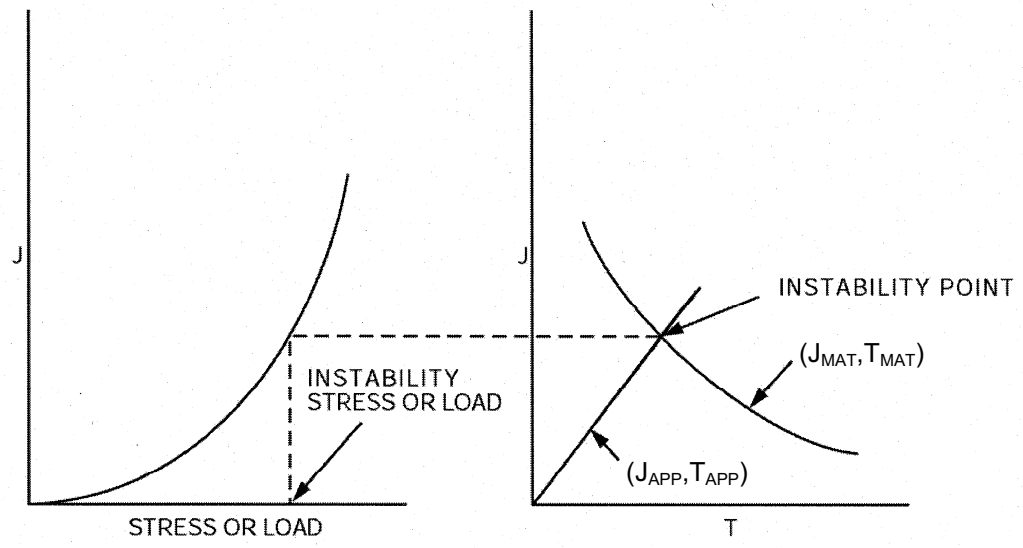

Figure 3B-2 J-T Methodology for Stability Evaluation

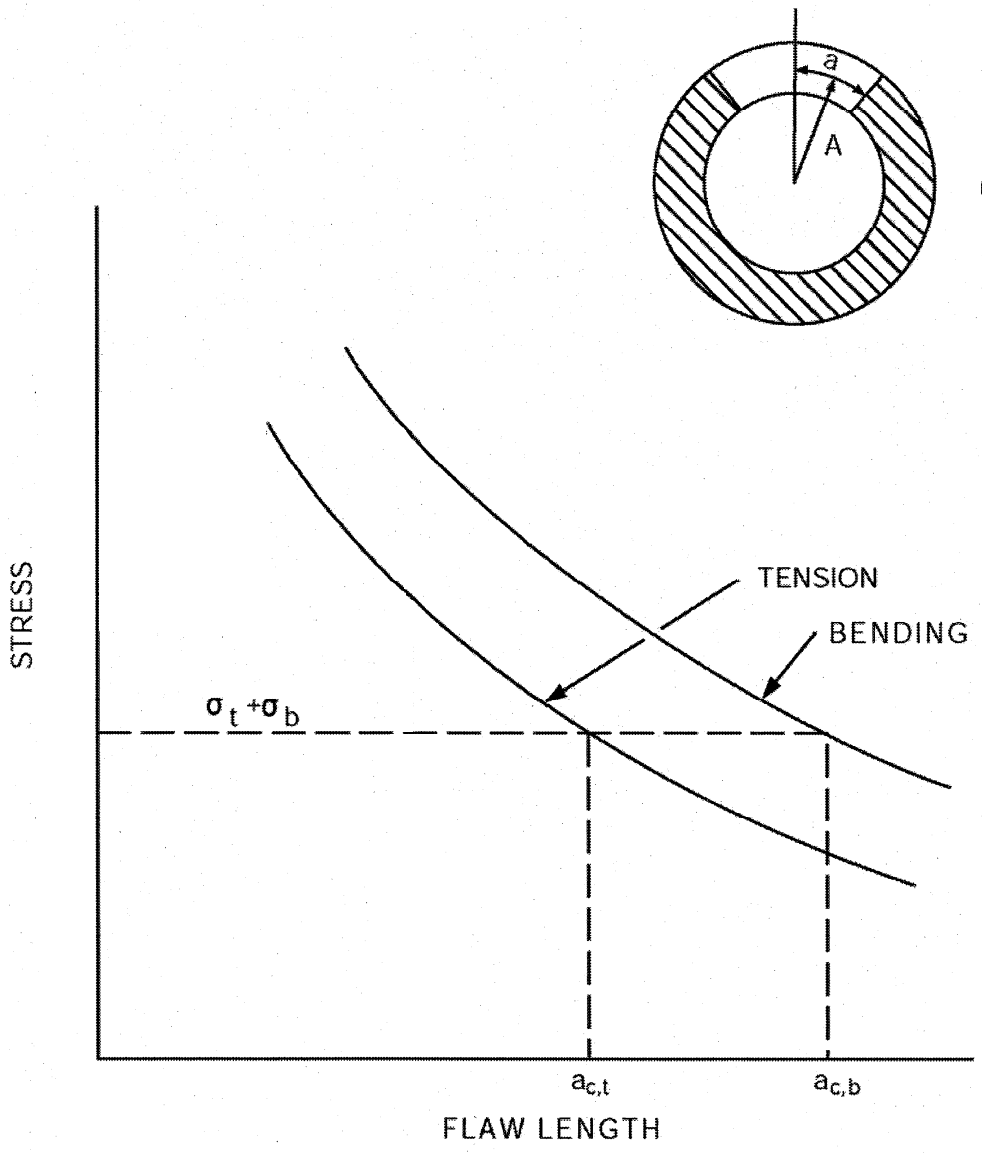

Figure 3B-3 Combination Scheme of Tension and Bending

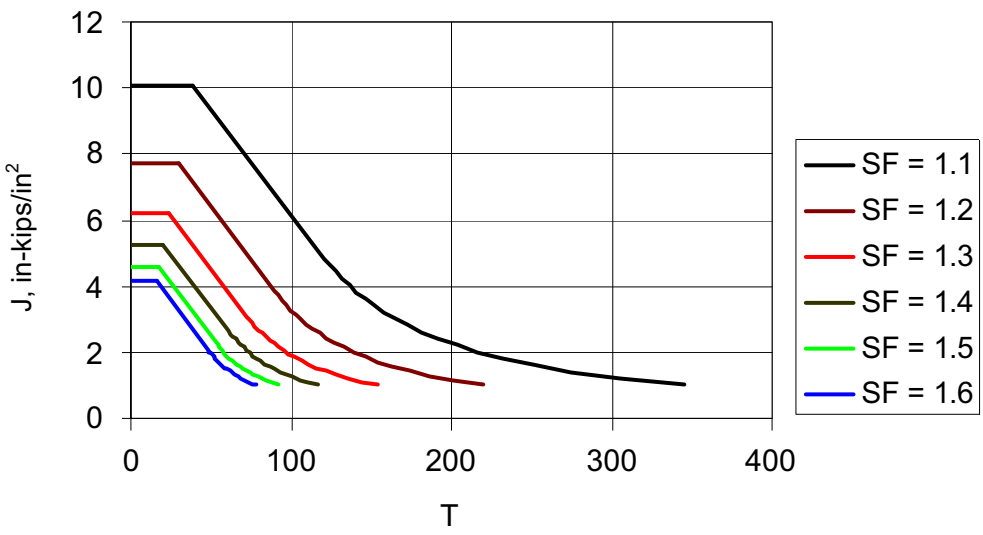

Figure 3B-4 Combination Scheme of Tension and Bending

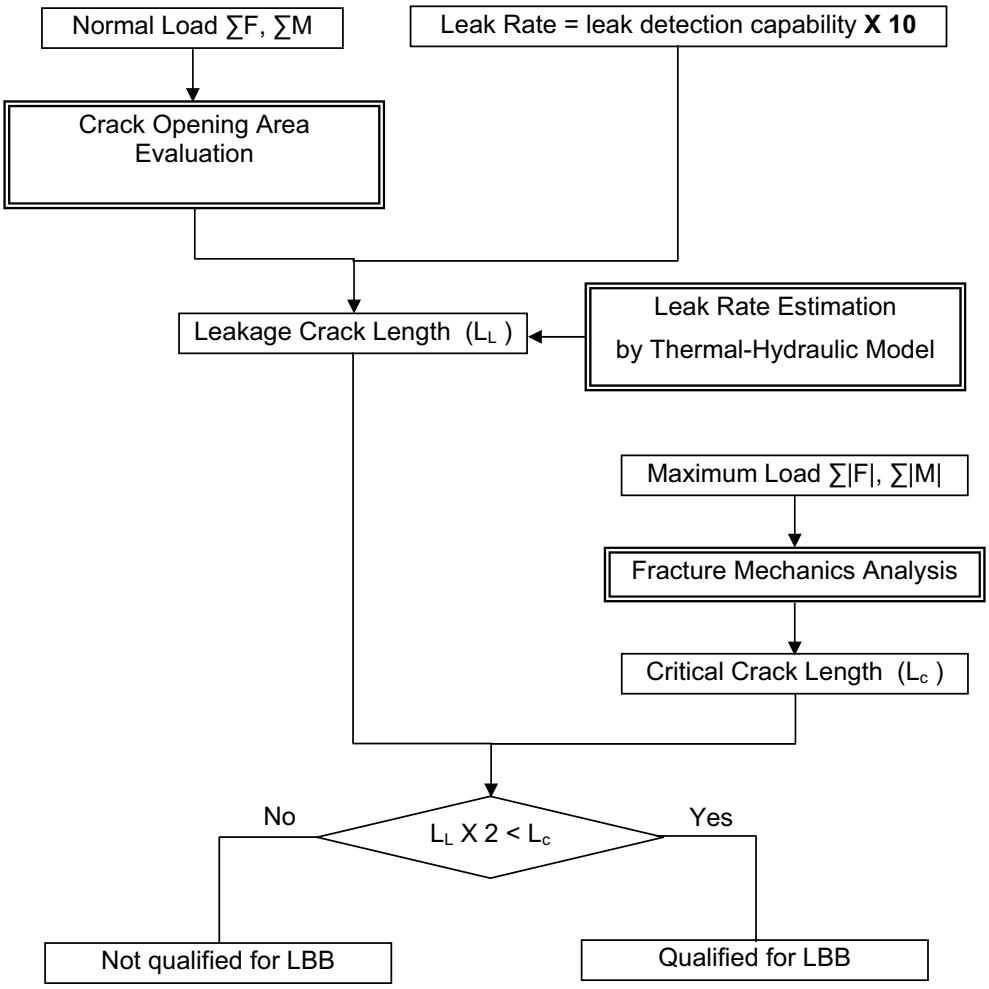

Figure 3B-5 LBB Evaluation Procedure of the U.S. Plant

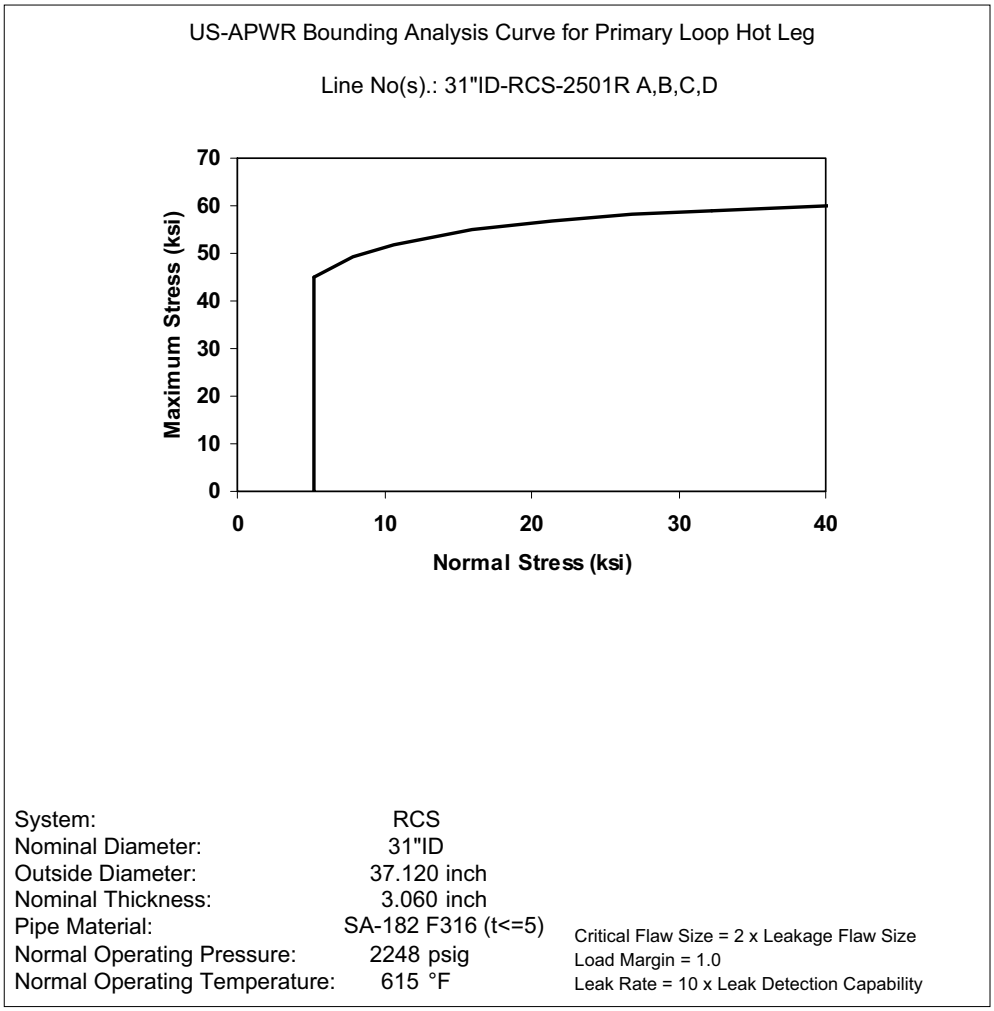

Figure 3B-6 US-APWR BAC for Primary Loop Hot Leg (SA182F316)

US-APWR Bounding Analysis Curve for Primary Loop Hot Leg

Line No(s): 31"ID-RCS-2501R A,B,C,D

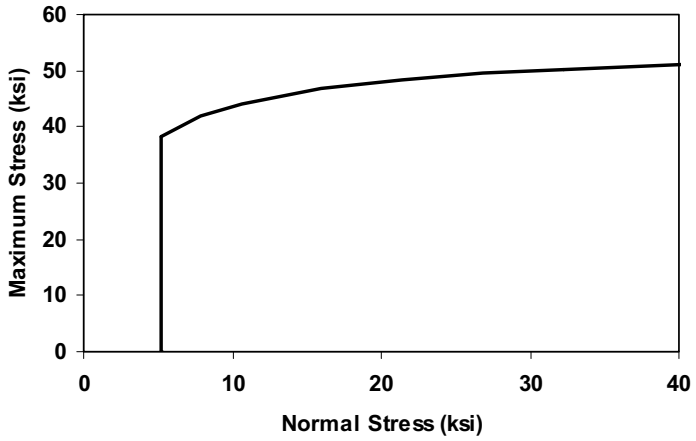

System:	RCS
Nominal Diameter:	31"ID
Outside Diameter:	37.120 inch
Nominal Thickness:	3.060 inch
Pipe Material:	SA-182 F316LN (t<=5)
Normal Operating Pressure:	2248 psig
Normal Operating Temperature:	615 °F

Critical Flaw Size = 2 x Leakage Flaw Size
Load Margin = 1.0
Leak Rate = 10 x Leak Detection Capability

Figure 3B-7 US-APWR BAC for Primary Loop Hot Leg (SA182 F316LN)

US-APWR Bounding Analysis Curve for Primary Loop Crossover Leg

Line No(s): 31"ID-RCS-2501R A,B,C,D

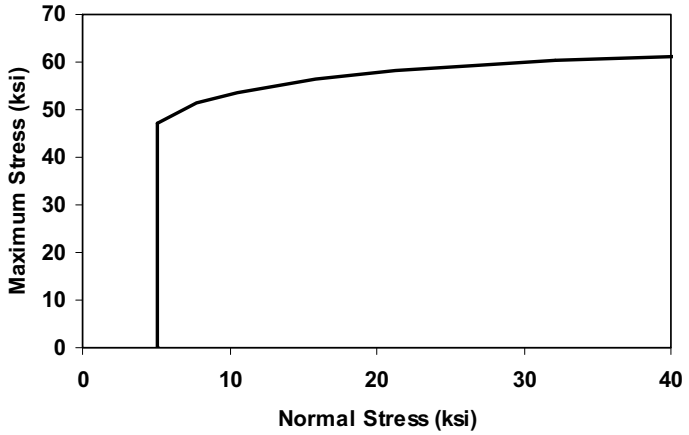

System:	RCS
Nominal Diameter:	31"ID
Outside Diameter:	37.120 inch
Nominal Thickness:	3.060 inch
Pipe Material:	SA-182 F316 (t<=5)
Normal Operating Pressure:	2204 psig
Normal Operating Temperature:	551 °F

Critical Flaw Size = 2 x Leakage Flaw Size
Load Margin = 1.0
Leak Rate = 10 x Leak Detection Capability

Figure 3B-8 US-APWR BAC for Primary Loop Crossover Leg (SA182 F316)

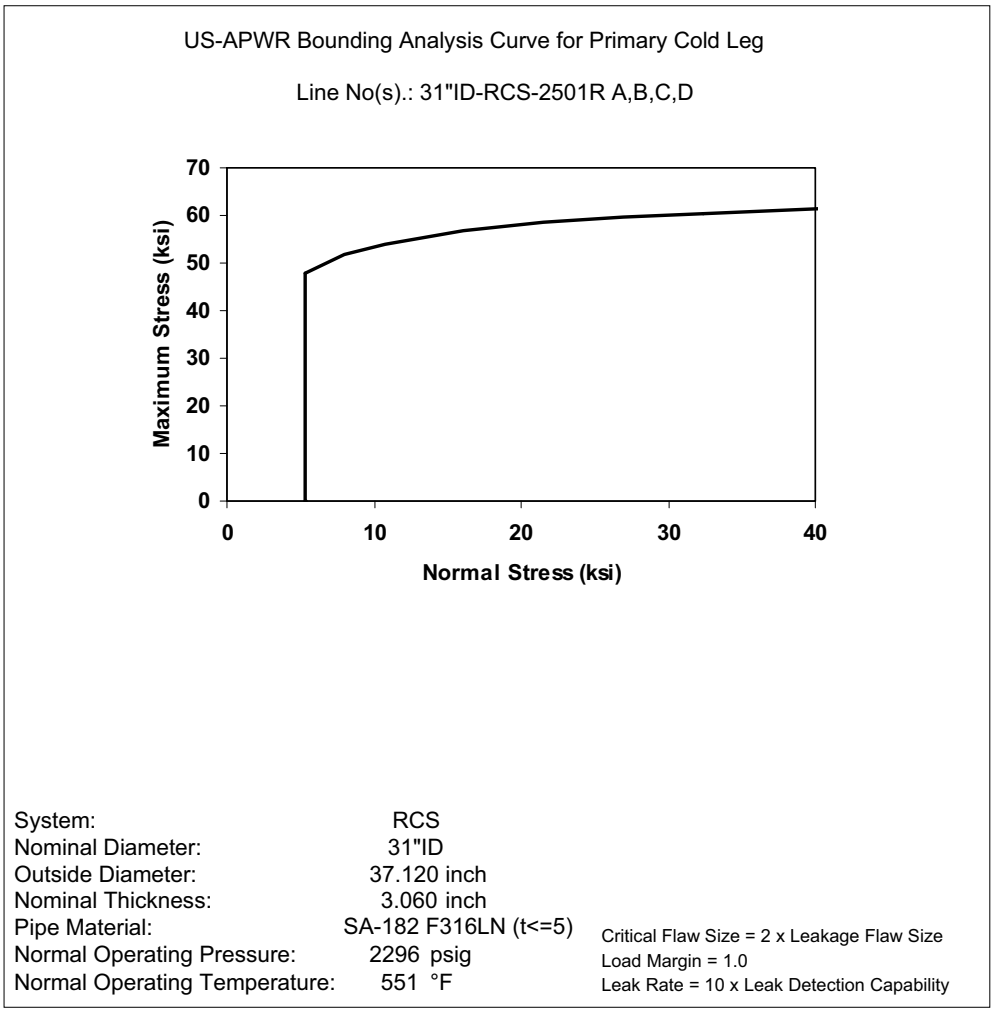

Figure 3B-9 US-APWR BAC for Primary Cold Leg (SA182 F316LN)

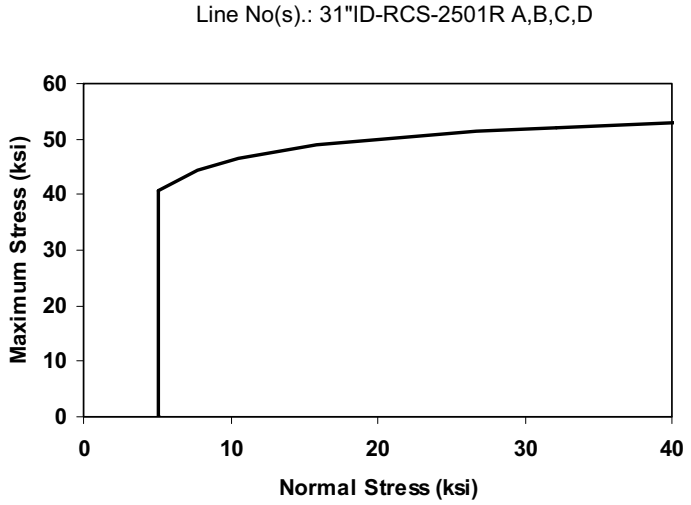

System:	RCS
Nominal Diameter:	31"ID
Outside Diameter:	37.120 inch
Nominal Thickness:	3.060 inch
Pipe Material:	SA-182 F316LN (t<=5)
Normal Operating Pressure:	2204 psig
Normal Operating Temperature:	551 °F

Critical Flaw Size = 2 x Leakage Flaw Size
Load Margin = 1.0
Leak Rate = 10 x Leak Detection Capability

Figure 3B-10 US-APWR BAC for Primary Loop Crossover Leg (SA182 F316LN)

US-APWR Bounding Analysis Curve for Primary Loop Cold Leg

Line No(s).: 31"ID-RCS-2501R A,B,C,D

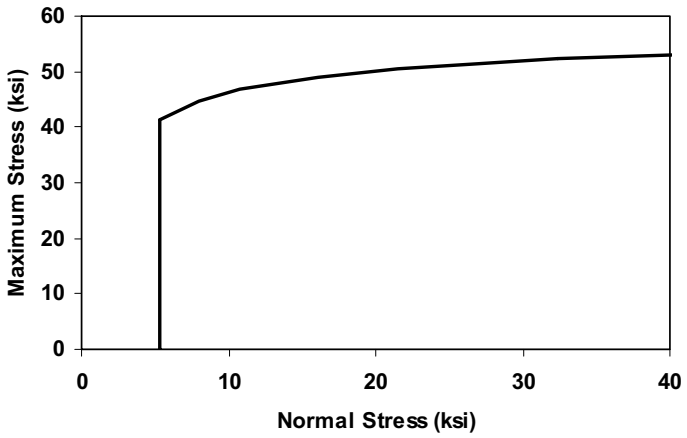

System:	RCS
Nominal Diameter:	31"ID
Outside Diameter:	37.120 inch
Nominal Thickness:	3.060 inch
Pipe Material:	SA-182 F316LN (t<=5)
Normal Operating Pressure:	2296 psig
Normal Operating Temperature:	551 °F

Critical Flaw Size = 2 x Leakage Flaw Size
Load Margin = 1.0
Leak Rate = 10 x Leak Detection Capability

Figure 3B-11 US-APWR BAC for Primary Cold Leg (SA182 F316LN)

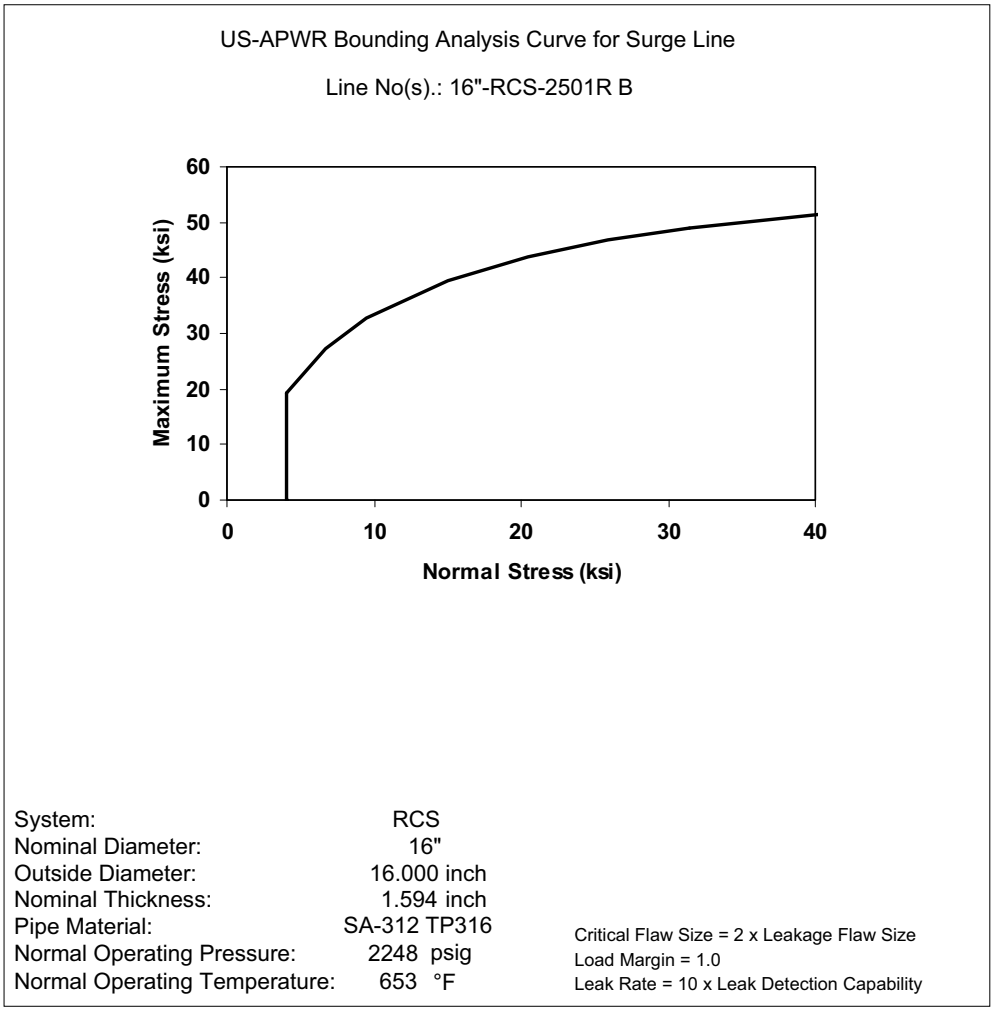

Figure 3B-12 US–APWR BAC for Surge Line (Normal Operation)

Figure 3B-13 Deleted

US-APWR Bounding Analysis Curve for RHRS Hot Leg Branch Line off RCS

Line No(s).: 10"-RCS-2501R A,B,C,D

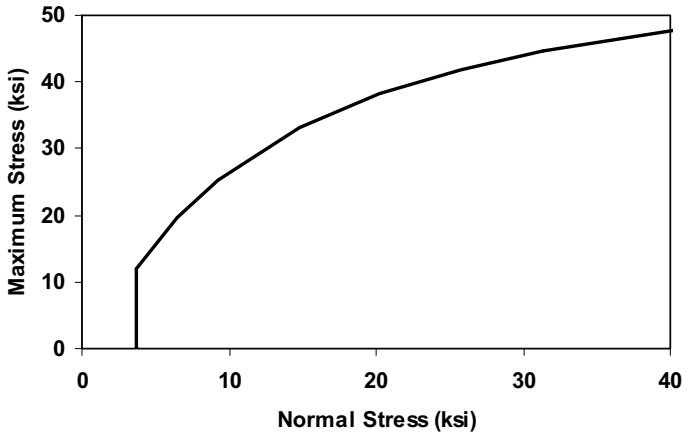

System:	RCS
Nominal Diameter:	10"
Outside Diameter:	10.750 inch
Nominal Thickness:	1.125 inch
Pipe Material:	SA-312 TP316
Normal Operating Pressure:	2248 psig
Normal Operating Temperature:	615 °F

Critical Flaw Size = 2 x Leakage Flaw Size
Load Margin = 1.0
Leak Rate = 10 x Leak Detection Capability

Figure 3B-14 US–APWR BAC for RHRS at Hot Leg

US-APWR Bounding Analysis Curve for RHRS Cold Leg Branch Line off RCS
Line No(s).: 8"-RCS-2501R A,B,C,D

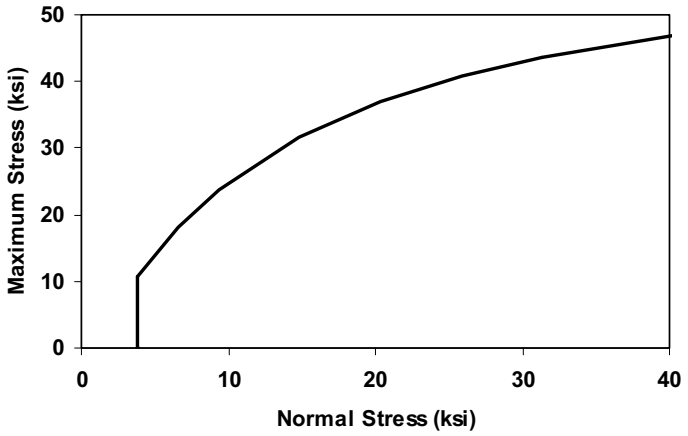

System:	RCS
Nominal Diameter:	8"
Outside Diameter:	8.625 inch
Nominal Thickness:	0.906 inch
Pipe Material:	SA-312 TP316
Normal Operating Pressure:	2296 psig
Normal Operating Temperature:	551 °F

Critical Flaw Size = 2 x Leakage Flaw Size
Load Margin = 1.0
Leak Rate = 10 x Leak Detection Capability

Figure 3B-15 US–APWR BAC for RHRS at Cold Leg

US-APWR Bounding Analysis Curve for Accumulator Line off RCS
Line No(s).: 14"-RCS-2501R A,B,C,D

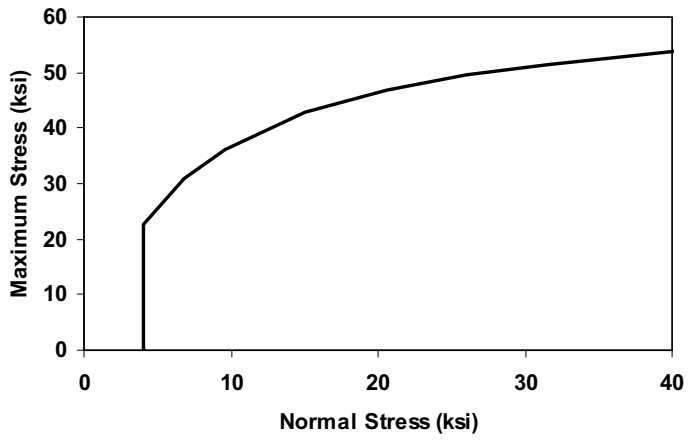

System:	SIS
Nominal Diameter:	14"
Outside Diameter:	14.000 inch
Nominal Thickness:	1.406 inch
Pipe Material:	SA-312 TP316
Normal Operating Pressure:	2296 psig
Normal Operating Temperature:	551 °F

Critical Flaw Size = 2 x Leakage Flaw Size
Load Margin = 1.0
Leak Rate = 10 x Leak Detection Capability

Figure 3B-16 US-APWR BAC for Accumulator System

US-APWR Bounding Analysis Curve for Pzr Spray Line

Line No(s).: 6"-RCS-2501R B,C

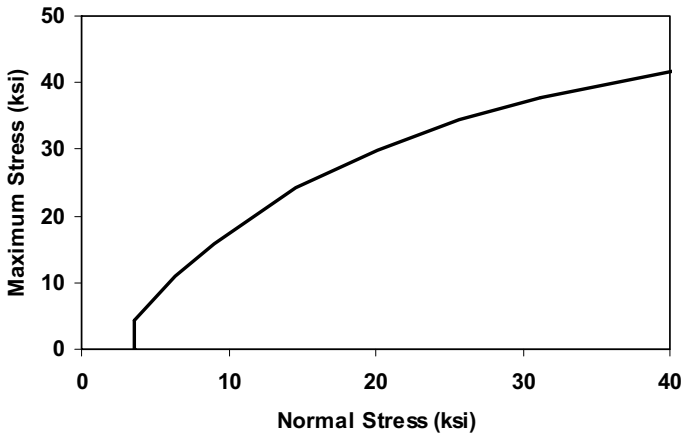

System:	RCS
Nominal Diameter:	6"
Outside Diameter:	6.625 inch
Nominal Thickness:	0.719 inch
Pipe Material:	SA-312 TP316
Normal Operating Pressure:	2296 psig
Normal Operating Temperature:	551 °F

Critical Flaw Size = 2 x Leakage Flaw Size
Load Margin = 1.0
Leak Rate = 10 x Leak Detection Capability

Figure 3B-17 US-APWR BAC for Pressurizer Spray Line

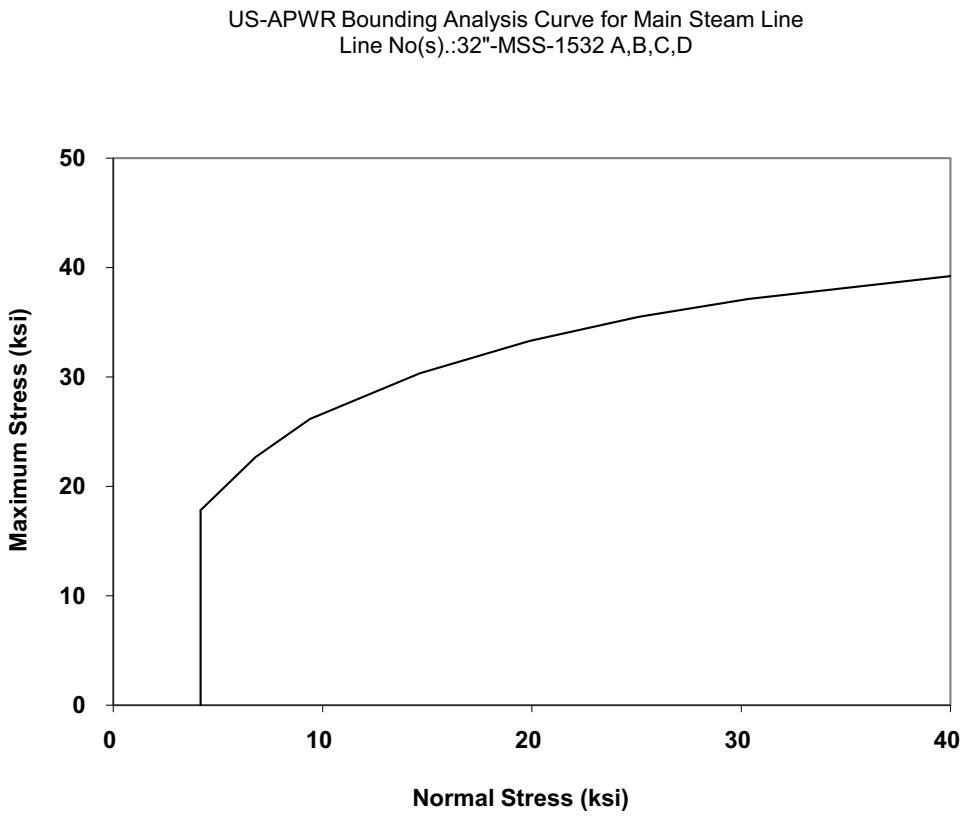

System:	MSS	
Nominal Diameter:	32"	
Outside Diameter:	32.000 inch	
Nominal Thickness:	1.496 inch	
Pipe Material:	SA-106 Grade B	Critical Flaw Size = 2 x Leakage Flaw Size
Normal Operating Pressure:	907 psig	Load Margin = 1.0
Normal Operating Temperature:	535 °F	Leak Rate = 10 x Leak Detection Capability

Figure 3B-18 US-APWR BAC for Main Steam Line

APPENDIX 3C

REACTOR COOLANT LOOP ANALYSIS METHODS

CONTENTS

Page

3C Reactor Coolant Loop Analysis Methods 3C-1

3C.1 Introduction 3C-1

3C.2 RCL Model Description 3C-1

3C.2.1 Modeling of Primary Components and Equipment 3C-1

3C.2.2 Modeling of Supports 3C-2

3C.2.2.1 SG Supports 3C-2

3C.2.2.2 RCP Supports 3C-2

3C.2.2.3 RV Support 3C-2

3C.2.3 Modeling of RCL Piping 3C-3

3C.3 Design Requirements 3C-3

3C.4 Static Analyses 3C-3

3C.4.1 Deadweight 3C-3

3C.4.2 Internal Pressure 3C-4

3C.4.3 Thermal Expansion 3C-4

3C.5 Dynamic Analyses 3C-4

3C.6 Description of Computer Programs 3C-4

3C.7 References 3C-5

ACRONYMS AND ABBREVIATIONS

ASME	American Society of Mechanical Engineers
DCD	Design Control Document
FE	finite element
PCCV	prestressed concrete containment vessel
R/B	reactor building
RCL	reactor coolant loop
RCP	reactor coolant pump
RV	reactor vessel
SG	steam generator
SSE	safe-shutdown earthquake

3C Reactor Coolant Loop Analysis Methods

3C.1 Introduction

This Appendix provides the analytical methods of the reactor coolant loop (RCL) piping and support system model.

RCL dynamic analysis is applied for the decoupled model from reactor building (R/B), prestressed concrete containment vessel (PCCV), and containment internal structure (CIS). The RCL properties of the model are based on this Appendix.

The dynamic analysis of the coupled model between building structure and RCL is performed using methods described in Subsection 3.7.2. RCL seismic analysis is performed, using independent support motion method or time-history direct integration analysis method, described in Subsection 3.7.3. The resulting static and dynamic loads generated from the RCL piping and the component support models provide the end loads and displacements at the connecting components and support points for each loop analyzed.

RCL accident analysis is performed for the postulated pipe rupture cases considering the applicable leak-before-break criteria. Analysis methods apply time history direct integration or equivalent static analysis. External loads of pipe rupture, thrust loads, jet impingement loads, and subcompartment pressure loads are appropriately considered. The enveloping load is conservatively applied as the design load of the component. The combination of loads for Class 1 components and supports is discussed in Design Control Document (DCD) Subsection 3.9.3.1.3. Refer also to DCD Subsection 3.9.3.1 for additional discussion on the modeling of the RCL piping and support system.

3C.2 RCL Model Description

The analysis model consists of the RCL hot, cold, and cross-over loop piping, steam generator (SG), reactor coolant pump (RCP), reactor vessel (RV), and component supports, as applicable, for each loop. The RCL piping and support system is modeled as three-dimensional finite elements (FEs) representing the components, pipes, and supports as beam elements, masses, and springs with imposed boundary conditions. The RCL of the US–APWR has four loops, which are modeled as beginning and ending at the hot leg and cold leg RV nozzles. These combined system models include both the translational and rotational stiffness, mass characteristics of the RCL piping and components, and the stiffness of supports. The stiffnesses and mass effects of auxiliary line piping are considered when they affect the system.

3C.2.1 Modeling of Primary Components and Equipment

The SG, RCP, and RV are modeled using equivalent pipe and beam elements, and are represented by lumped masses in each loop analysis. The geometry of the component is used to determine the properties of the equivalent piping or beam elements connecting masses. Other properties applied to the equivalent piping or beam elements include the modulus of elasticity and coefficient of thermal expansion corresponding to each thermal condition.

In the case of the RV, the cylindrical shell is modeled using equivalent beam element properties adjusted to simulate the fundamental frequency. Mass elements are assigned to represent the vessel shell, core barrel, fuel assemblies, and integrated head package.

3C.2.2 Modeling of Supports

3C.2.2.1 SG Supports

Each SG support system consists of an upper lateral support structure, an intermediate lateral support structure, and a lower lateral support structure.

Four columns support the vertical loads of the SG from the reinforced concrete slab below. The upper and lower ends of the columns are pin-jointed to permit movement of the SG caused by thermal expansion of piping.

The upper and intermediate lateral supports are horizontal restraints utilizing snubbers considering thermal expansion of piping, while the lower support structure is constructed entirely of structural steel and consists of the lateral support and the columns.

All support systems restrain horizontal and vertical movement of the SG in the event of an earthquake or other design basis accidents.

The stiffness of the upper and intermediate lateral supports includes the SG shell flexibility.

3C.2.2.2 RCP Supports

Each RCP support system consists of a lateral support structure and three support columns that support the vertical loads of the RCP from the slab below. The support structures are constructed entirely of structural steel.

The upper and lower ends of the columns are pin-jointed to permit the movement of the pumps caused by thermal expansion of the piping.

The lateral support structure is designed considering the thermal expansion of the piping and also restrains horizontal movement of the RCP in the event of an earthquake or other design basis accidents.

The value of the support stiffness is determined considering the flexibility of the structural support members. The stiffness of the lateral support also includes flexibility of the RCP casing.

3C.2.2.3 RV Support

The RV support system consists of eight steel support pads which are integrated with the inlet and outlet nozzle forgings. The support pads are placed on support brackets, which are supported by steel structure on the primary shield wall. The support system is designed for operating and accident load cases caused by seismic and postulated pipe rupture, including loss-of-coolant accidents. The supports are formed by sliding surfaces between the shim plates and support pads to allow radial thermal growth of the RCL and

RV. The vessel position is maintained unchanged by controlling the horizontal load through the support brackets and the base plate.

The RV supports are modeled as eight spring elements simulating the RV supported on the primary shield wall. Each support is represented by a stiffness matrix consisting of vertical and tangential stiffness. The RV model includes the effects of the vessel shell thermal expansion at the inlet and outlet nozzles and the stiffness of the primary shield wall.

3C.2.3 Modeling of RCL Piping

The three-dimensional model of the RCL piping is developed using pipe and bend elements. Each of the four RCLs has a hot leg, crossover leg, and cold leg. Nodal points are assigned at support points, and pipe bends. Nodes are connected by elements assigned with applicable properties. The straight runs and bends of each leg are input with the nominal dimensions. Lumped mass is used for both static and dynamic analyses.

3C.3 Design Requirements

The RCL analysis is consistent with piping analysis for the US-APWR, which uses the 1992 Edition of the ASME, Boiler and Pressure Vessel Code, Section III, Division 1 (Reference 3C-1). General and local primary membrane stress criterion is qualified by Equation (9) of the ASME Code, Section III, Paragraph NB-3652. Secondary stresses generated by thermal expansion are qualified by Equation (12) in ASME Code, Section III, Paragraph NB-3653.

The loadings for ASME Code, Section III, Class 1 components are defined in Subsection 3.9.3.1. The required load combinations for ASME Code, Section III, Class 1 components, piping, and supports are presented in Tables 3.9-3 and 3.9-4 for internal pressure, thermal expansion, weight, safe shutdown earthquake (SSE), and Design Basis Pipe Break.

In addition to the analyses of these loads, the RCL piping is analyzed for the effect of cyclic fatigue due to the design transients and earthquakes smaller than SSE as discussed in Subsection 3.9.3.1.

3C.4 Static Analyses

RCL static analyses are modeled to include the RV supports, and the column supports of the SG, and the RCP as active RCL supports. Lateral snubbers related to any of these components are considered inactive. The containment internal structure is not applicable as system loads in the deadweight analysis and, therefore, are omitted from the model. The static analysis includes RCL deadweight, internal pressure, and thermal expansion.

3C.4.1 Deadweight

The RCL is statically analyzed for the total weight of the RCL piping, equipment, and ancillary items including the weight of water. Deadweight piping mass is distributed by lumped mass during static analyses.

3C.4.2 Internal Pressure

The design value of normal internal operating pressure is utilized for static analyses of RCL pipe stresses and to obtain system support reactions.

3C.4.3 Thermal Expansion

The thermal expansion of the RCL piping, RV, SG, RCP, and the component supports are modeled and analyzed, as applicable. The contributions of the stiffness of auxiliary lines on the RCL piping model are generally negligible, by design of the auxiliary line supports.

3C.5 Dynamic Analyses

The seismic and accident design analysis method for the RCL system components is presented in MUAP-09002 Rev.2, "Summary of Seismic and Accident Load Conditions of Primary Components and Piping" (Reference 3C-2). The seismic design of the primary components and piping system are based on the decoupled RCL analysis model, as presented in Section 5.2 of MUAP-09002 Rev.2.

The seismic input is obtained from the coupled model of the RCL, R/B, PCCV, and CIS, considering the dynamic effects of an SSE. The effects of soil-structure interaction is also considered for the subgrade profiles described in Subsection 3.7.1.

RCL seismic analysis is performed for using decoupled RCL model analysis, considering the multiple support excitations. The seismic analysis of the decoupled RCL model utilizes the independent support motion (ISM) method and time history analysis method with direct integration.

ISM method is applied for the RCL components and piping design, using the envelop broadened response spectra, corresponding to cover the generic layered profiles with wide variation of soil properties. Time history analysis method is applied for some specific component design, such as the SG lower lateral support, considering both non-linear effect of the support and the building frequency shift. Damping is used for RCL components at 3 % of the critical damping.

RCL accident analysis is based on the time history analysis method, considering the non-linear effects of the SG Lower lateral support, as described above.

3C.6 Description of Computer Programs

Computer programs used for the US-APWR, RCL analysis are consistent with those identified in Sections 3.9 and 3.12. The primary method of analysis for the RCL piping and support system is the FE analysis program ANSYS (Reference 3C-3). Refer to Subsection 3.7.2.3 and 3.7.3 for a discussion of the modeling procedures and guidelines.

3C.7 References

3C-1 ASME Boiler and Pressure Vessel Code, Section III. American Society of Mechanical Engineers, 1992 Edition including 1992 Addenda, Subsection NB, NC, and ND.

3C-2 Summary of Seismic and Accident Load Conditions for Primary Components and Piping, MUAP-09002, Rev. 2 (Proprietary) and MUAP-09002, Rev. 2 (Non-Proprietary), December 2010.

3C-3 ANSYS, Advanced Analysis Techniques Guide, Release 12.1, ANSYS, Inc., 2010.

APPENDIX 3D

EQUIPMENT QUALIFICATION OF ELECTRICAL AND MECHANICAL EQUIPMENT

CONTENTS

Page

3D Equipment Qualification of Electrical and Mechanical Equipment.....3D-1

3D.1 Introduction 3D-1

3D.1.1 Equipment Identification 3D-1

3D.1.2 Describe Tag ID Codes and Systems 3D-1

3D.1.3 Identification of Safety-Related Systems and Components ...3D-2

3D.1.4 Description of the Supporting Analysis.....3D-2

3D.1.5 Determination of Operating Times.....3D-2

3D.1.6 Determination of Seismic Requirements 3D-2

3D.1.7 Determination of Radiation Exposure Requirements 3D-2

3D.2 Equipment Identification.....3D-3

3D.3 Equipment Functional Qualification.....3D-3

TABLES

Page

Table 3D-1 Equipment Post-Accident Operability Times 3D-4

Table 3D-2 US-APWR Environmental Qualification Equipment List 3D-7

Table 3D-3 Location for Zone 3D-72

Table 3D-4 List of Electrical Equipment with Special Seismic Qualification Requirements 3D-73

ACRONYMS AND ABBREVIATIONS

A/B	auxiliary building
CFR	Code of Federal Regulations
DBA	design basis accident
EQ	environmental qualification
ESF	engineered safety features
HELB	high-energy line break
PAM	post accident monitoring
PB	pressure boundary
PCCV	prestressed concrete containment vessel
PS/B	power source/building
R/B	reactor building
RCS	reactor coolant system
RT	reactor trip
T/B	turbine building
UHSRS	ultimate heat sink related structures

3D Equipment Qualification of Electrical and Mechanical Equipment

3D.1 Introduction

This Appendix describes the mechanical and electrical equipment that is qualified for service in the US-APWR in accordance with the requirements delineated in the US-APWR equipment qualification program that includes the Environmental Qualification (EQ) Program as described in Section 3.11.

3D.1.1 Equipment Identification

Equipment addressed by the equipment qualification program includes:

- Equipment qualified by the EQ Program described in Section 3.11
- Active mechanical components required to be functionally qualified as described in Sections 3.9.3 and 3.9.6
- Mechanical and electrical equipment with special seismic qualification requirements such as seismic categories I and II described in Section 3.10.

Table 3D-2 lists the equipment required to be qualified under the EQ Program. Active mechanical components including snubbers are identified in Section 3.9.6 and Tables 3.9-13 and 3.9-14. Equipment with special seismic qualification requirements are identified in Table 3.2-2 for mechanical equipment and Tables 3D-2 and 3D-4 for electrical equipment.

Equipment is identified by system code and component type. Safety-related systems are described in Section 3.2. Safety-related components and systems are relied upon to mitigate the consequences of a design basis accident (DBA). A safety function is an action relied upon during and following a design basis event to provide for:

- Integrity of the reactor coolant system
- The capability to shut down and maintain the reactor in a safe-shutdown conditions
- The capability to prevent or mitigate the consequences of an accident that could result in the potential for offsite exposure pursuant to the requirements delineated in 10 Code of Federal Regulations (CFR) 100.

Safety-related components and systems are selected in accordance with the above definition.

3D.1.2 Describe Tag ID Codes and Systems

Equipment is identified by system code and component type. For safety-related systems, there are normally four separate, independent trains or similar components.

3D.1.3 Identification of Safety-Related Systems and Components

As described in Section 3.2.

3D.1.4 Description of the Supporting Analysis

The expected temperature, pressure, and humidity during normal operations define the normal or expected operating conditions for each location. The design basis events addressed by the analysis of loss of coolant accident (LOCA), steam line break and feed water line break. These accidents are considered to bound the expected worst-case environmental conditions for mechanical and electrical systems and components. Various computer models are used to determine the expected severity of the environmental parameters at each location within the facility. This includes expected radiation and chemical exposure.

3D.1.5 Determination of Operating Times

The accident and post accident operating times given in Table 3D-1 are conservatively determined based on the safety function(s) the equipment performs to mitigate a design basis event. These actions include:

- Trip and monitor functions of sensors and instruments
- Operability requirements for electro-mechanical equipment

3D.1.6 Determination of Seismic Requirements

The seismic analysis and requirements are described in Section 3.10. The seismic class of mechanical and fluid systems, components, and equipment are shown in Table 3.2-2 of Section 3.2. The seismic class of safety-related electrical and instrumentation and control equipment, and certain nonsafety-related electrical equipment with special seismic qualification requirements are shown in Tables 3D-2 and 3D-4. 10 CFR 50, Appendix B requirements will be applied to seismic category I electrical, instrumentation and control, and mechanical equipment contained in Tables 3.2-2 and 3D-2, as discussed in Subsections 3.2.1.1.1 and 3.2.1.1.2. The selected elements of the quality assurance program described in Chapter 17 will be applied to nonsafety-related electrical equipment with special seismic qualification requirements and seismic category II SSCs.

3D.1.7 Determination of Radiation Exposure Requirements

The normal operating dose rates and consequent 60 year design expected doses at various locations inside containment are derived from theoretical calculations assuming an expected 60 years of continuous operations with reactor power of 4,451 mega watts-thermal and steady state operating conditions. Radiation doses associated with postulated accidents are determined by the methods, models and assumptions as described in Chapter 12 and 15, and MUAP-08015. Source term calculation methods are described in Chapter 12 Subsection 12.2.1.3 and Appendix 15A.1.1.3, dose calculation methods are described in Subsection 5.5.1.1 of MUAP-08015.

The 60 year design expected doses are not assumed to determine the radiation dose for certain electrical equipment whose replacement is expected during the life of the plant (i.e., electrical equipment located in Zone 13-3). The assumed operating period is identified in Table 5-5 of MUAP-08015.

3D.2 Equipment Identification

Subcomponents to be qualified are identified through the design basis requirements on each main component. The criterion for environmental qualification is that the property of the subcomponents with regard to its application is not degraded during the specified qualified life to the point that the main component is unable to perform its intended safety function.

Regarding the functionality or pressure boundary integrity function of mechanical equipment, the non-metallic subcomponents are the weak points for environmental qualification. Typical non-metallic items that are subject to the qualification process include gaskets and O-rings, diaphragms, diaphragm support sheets, lubricants, hoses, nonmetallic tubing, nonmetallic valve seats or seals, shock mounting supports and various nonmetallic housings.

3D.3 Equipment Functional Qualification

In addition to the environmental qualification program and the seismic qualification program, the equipment qualification program described in this appendix and in MUAP-08015 also includes functional qualification of active mechanical components required by Sections 3.9.3 and 3.9.6. This equipment includes ASME Code Class 1, 2, and 3 active mechanical components (e.g., certain safety-related pumps, valves, and dynamic restraints). The components covered by this program are listed in Tables 3.9-7, 3.9-13, and 3.9-14.

Table 3D-1 Equipment Post-Accident Operability Times

Equipment	Required Post-Accident Operability	
Equipment necessary to perform trip functions	5 minutes	(Envelopes trip time requirements)
Equipment located outside containment potentially requiring long-term functional maintenance after the post-accident operability time (parts of the equipment are accessible, and can be repaired, replaced, or recalibrated, as needed)	2 weeks	(Equipment requiring maintenance after the post accident operability time are identified by Note (1) in the "Comments" column of Table 3D-2.)
Equipment located inside containment that is inaccessible and is required for post-accident monitoring	4 months	
Equipment located inside containment, is inaccessible, or cannot be repaired, replaced, recalibrated or equivalent indication cannot be obtained	1 year	
Equipment located in a mild environment following an accident	Various	(Specific to function, maximum of 1 year)

Brief Description of Section Headings

See Table 3D-2 that follows:

Item Number

Numerical sequence item numbering of the US-APWR Environmental Qualified Equipment.

Equipment Tag

Electrical equipment numbering system that uniquely identifies the item/device/ component per acronyms/ abbreviations with sequential serial numbering system.

Description 1

Item/device/component brief description justifying the abbreviation/acronyms of the equipment tag references.

Location

Building

Place where the referenced item/device/component is located in the building.

Zone

Place where the referenced item/device/component is located in the Zone as shown in Table 3D-3.

Purpose

This section shows the objective of the equipment that is being qualified.

Operational Duration

Duration of functional time period required by the equipment to fulfill its intended safety function. (This section allows for time units to be recorded in hours, minutes, days, and years.)

Environmental Conditions

This section illustrates the environmental condition that will be seen by the equipment that may be exposed to the plant operational environment except radiation.

Radiation Condition

This illustrates the radiation condition that will be seen by the equipment that may be exposed to the radiation environment.

Influence of Submergence for Total Integrated Dose

This section illustrates whether there is impact to Total Integrated Dose or not when components are submerged in case of high-energy line break (HELB) including LOCA except for those annotated with a number shown below.

1. Components with no possibility of submergence.
2. These components can be submerged in case of HELB, however these components are not required to assure the safety function (including components with alternatives).
3. Nonsafety-related components.

Qualification Process

This section designates the equipment classification according to the discipline that the equipment belongs to, according to the qualification program for the US-APWR.

Seismic Category

This demonstrates structural integrity and operability of mechanical and electrical equipment in the event of an earthquake or any multiplications of elastic waves throughout the earth however they are caused, which the component is expected to withstand and operate at a fully functional level.

Comments

Any remarks or explanatory notes that may be necessary for further explanation of the item/device/component or environmental conditions.

Table 3D-2 US-APWR Environmental Qualification Equipment List (Sheet 1 of 65)

Item Num	Equipment Tag	Description	Location		Purpose	Operational Duration	Environmental Conditions	Radiation Condition	Influence of Submergence for Total Integrated Dose	Qualification Process	Seismic Category	Comments
			Building	Zone	RT, ESF, PAM, Pressure Boundary (PB), Other(1)		Harsh or Mild	Harsh or Mild	Yes/No	E=Electrical M=Mechanical	I, II, Non	
Instruments (Transmitters)												
1	RCS-FT-022	Loop A - Reactor Coolant Flow	PCCV	1-5	RT	5min*	Harsh	Harsh	No (1)	E	I	*Not Required Post Accident
2	RCS-FT-023	Loop A - Reactor Coolant Flow	PCCV	1-5	RT	5min*	Harsh	Harsh	No (1)	E	I	*Not Required Post Accident
3	RCS-FT-024	Loop A - Reactor Coolant Flow	PCCV	1-5	RT	5min*	Harsh	Harsh	No (1)	E	I	*Not Required Post Accident
4	RCS-FT-025	Loop A - Reactor Coolant Flow	PCCV	1-5	RT	5min*	Harsh	Harsh	No (1)	E	I	*Not Required Post Accident
5	RCS-FT-032	Loop B - Reactor Coolant Flow	PCCV	1-5	RT	5min*	Harsh	Harsh	No (1)	E	I	*Not Required Post Accident
6	RCS-FT-033	Loop B - Reactor Coolant Flow	PCCV	1-5	RT	5min*	Harsh	Harsh	No (1)	E	I	*Not Required Post Accident
7	RCS-FT-034	Loop B - Reactor Coolant Flow	PCCV	1-5	RT	5min*	Harsh	Harsh	No (1)	E	I	*Not Required Post Accident
8	RCS-FT-035	Loop B - Reactor Coolant Flow	PCCV	1-5	RT	5min*	Harsh	Harsh	No (1)	E	I	*Not Required Post Accident
9	RCS-FT-042	Loop C - Reactor Coolant Flow	PCCV	1-5	RT	5min*	Harsh	Harsh	No (1)	E	I	*Not Required Post Accident
10	RCS-FT-043	Loop C - Reactor Coolant Flow	PCCV	1-5	RT	5min*	Harsh	Harsh	No (1)	E	I	*Not Required Post Accident
11	RCS-FT-044	Loop C - Reactor Coolant Flow	PCCV	1-5	RT	5min*	Harsh	Harsh	No (1)	E	I	*Not Required Post Accident
12	RCS-FT-045	Loop C - Reactor Coolant Flow	PCCV	1-5	RT	5min*	Harsh	Harsh	No (1)	E	I	*Not Required Post Accident
13	RCS-FT-052	Loop D - Reactor Coolant Flow	PCCV	1-5	RT	5min*	Harsh	Harsh	No (1)	E	I	*Not Required Post Accident
14	RCS-FT-053	Loop D - Reactor Coolant Flow	PCCV	1-5	RT	5min*	Harsh	Harsh	No (1)	E	I	*Not Required Post Accident
15	RCS-FT-054	Loop D - Reactor Coolant Flow	PCCV	1-5	RT	5min*	Harsh	Harsh	No (1)	E	I	*Not Required Post Accident

Table 3D-2 US-APWR Environmental Qualification Equipment List (Sheet 2 of 65)

Item Num	Equipment Tag	Description	Location		Purpose	Operational Duration	Environmental Conditions	Radiation Condition	Influence of Submergence for Total Integrated Dose	Qualification Process	Seismic Category	Comments
			Building	Zone	RT, ESF, PAM, Pressure Boundary (PB), Other(1)		Harsh or Mild	Harsh or Mild	Yes/No	E=Electrical M=Mechanical	I, II, Non	
16	RCS-FT-055	Loop D - Reactor Coolant Flow	PCCV	1-5	RT	5min*	Harsh	Harsh	No (1)	E	I	*Not Required Post Accident
17	RCS-LT-061	Pressurizer Water Level	PCCV	1-5	RT, PAM, Other	5min, 4mos, 36hr	Harsh	Harsh	No (1)	E	I	
18	RCS-LT-062	Pressurizer Water Level	PCCV	1-5	RT, PAM, Other	5min, 4mos, 36hr	Harsh	Harsh	No (1)	E	I	
19	RCS-LT-063	Pressurizer Water Level	PCCV	1-5	RT, PAM, Other	5min, 4mos, 36hr	Harsh	Harsh	No (1)	E	I	
20	RCS-LT-064	Pressurizer Water Level	PCCV	1-5	RT, PAM, Other	5min, 4mos, 36hr	Harsh	Harsh	No (1)	E	I	
21	RCS-PT-020	Loop A - Reactor Coolant Pressure	PCCV	1-5	PAM, Other	4mos, 36hr	Harsh	Harsh	No (1)	E	I	
22	RCS-PT-030	Loop B - Reactor Coolant Pressure	PCCV	1-5	PAM, Other	4mos, 36hr	Harsh	Harsh	No (1)	E	I	
23	RCS-PT-040	Loop C - Reactor Coolant Pressure	PCCV	1-5	PAM, Other	4mos, 36hr	Harsh	Harsh	No (1)	E	I	
24	RCS-PT-050	Loop D - Reactor Coolant Pressure	PCCV	1-5	PAM, Other	4mos, 36hr	Harsh	Harsh	No (1)	E	I	
25	RCS-PT-061	Pressurizer Pressure	PCCV	1-6	RT, ESF Other	5min, 30min, 36hr*	Harsh	Harsh	No (1)	E	I	*Not Required Post Accident
26	RCS-PT-062	Pressurizer Pressure	PCCV	1-6	RT, ESF Other	5min, 30min, 36hr*	Harsh	Harsh	No (1)	E	I	*Not Required Post Accident
27	RCS-PT-063	Pressurizer Pressure	PCCV	1-6	RT, ESF Other	5min, 30min, 36hr*	Harsh	Harsh	No (1)	E	I	*Not Required Post Accident
28	RCS-PT-064	Pressurizer Pressure	PCCV	1-6	RT, ESF Other	5min, 30min, 36hr*	Harsh	Harsh	No (1)	E	I	*Not Required Post Accident
29	CVS-FT-128	Primary Makeup Water Supply Flow	R/B	13-3	Other	2wks*	Mild	Mild	No (1)	E	I	*Not Required Post Accident
30	CVS-FT-129	Primary Makeup Water Supply Flow	R/B	13-3	Other	2wks*	Mild	Mild	No (1)	E	I	*Not Required Post Accident
31	SIS-FT-062	A - Safety Injection Pump Discharge Flow	R/B	13-3	PAM, Other	2wks, 36hr	Mild	Mild	No (1)	E	I	(1)
32	SIS-FT-063	B - Safety Injection Pump Discharge Flow	R/B	13-3	PAM, Other	2wks, 36hr	Mild	Mild	No (1)	E	I	(1)
33	SIS-FT-064	C - Safety Injection Pump Discharge Flow	R/B	13-3	PAM, Other	2wks, 36hr	Mild	Mild	No (1)	E	I	(1)
34	SIS-FT-065	D - Safety Injection Pump Discharge Flow	R/B	13-3	PAM, Other	2wks, 36hr	Mild	Mild	No (1)	E	I	(1)
35	SIS-FT-072	A - Safety Injection Pump Minimum Flow	PCCV	1-5	PAM, Other	4mos, 36hr	Harsh	Harsh	No (1)	E	I	
36	SIS-FT-073	B - Safety Injection Pump Minimum Flow	PCCV	1-5	PAM, Other	4mos, 36hr	Harsh	Harsh	No (1)	E	I	

Table 3D-2 US-APWR Environmental Qualification Equipment List (Sheet 3 of 65)

Item Num	Equipment Tag	Description	Location		Purpose	Operational Duration	Environmental Conditions	Radiation Condition	Influence of Submergence for Total Integrated Dose	Qualification Process	Seismic Category	Comments
			Building	Zone	RT, ESF, PAM, Pressure Boundary (PB), Other(1)		Harsh or Mild	Harsh or Mild	Yes/No	E=Electrical M=Mechanical	I, II, Non	
37	SIS-FT-074	C - Safety Injection Pump Minimum Flow	PCCV	1-5	PAM, Other	4mos, 36hr	Harsh	Harsh	No (1)	E	I	
38	SIS-FT-075	D - Safety Injection Pump Minimum Flow	PCCV	1-5	PAM, Other	4mos, 36hr	Harsh	Harsh	No (1)	E	I	
39	SIS-LT-010	A - Accumulator Water Level	PCCV	1-5	PAM	4mos	Harsh	Harsh	No (1)	E	I	
40	SIS-LT-020	B - Accumulator Water Level	PCCV	1-5	PAM	4mos	Harsh	Harsh	No (1)	E	I	
41	SIS-LT-030	C - Accumulator Water Level	PCCV	1-5	PAM	4mos	Harsh	Harsh	No (1)	E	I	
42	SIS-LT-040	D - Accumulator Water Level	PCCV	1-5	PAM	4mos	Harsh	Harsh	No (1)	E	I	
43	SIS-PT-010	A - Accumulator Pressure	PCCV	1-5	PAM, Other	4mos, 36hr	Harsh	Harsh	No (1)	E	I	
44	(Deleted)											
45	SIS-PT-020	B - Accumulator Pressure	PCCV	1-5	PAM, Other	4mos, 36hr	Harsh	Harsh	No (1)	E	I	
46	(Deleted)											
47	SIS-PT-030	C - Accumulator Pressure	PCCV	1-5	PAM, Other	4mos, 36hr	Harsh	Harsh	No (1)	E	I	
48	(Deleted)											
49	SIS-PT-040	D - Accumulator Pressure	PCCV	1-5	PAM, Other	4mos, 36hr	Harsh	Harsh	No (1)	E	I	
50	(Deleted)											
51	SIS-PT-060	A - Safety Injection Pump Suction Pressure	R/B	13-3	Other	36hr	Mild	Mild	No (1)	E	I	
52	SIS-PT-061	B - Safety Injection Pump Suction Pressure	R/B	13-3	Other	36hr	Mild	Mild	No (1)	E	I	
53	SIS-PT-062	C - Safety Injection Pump Suction Pressure	R/B	13-3	Other	36hr	Mild	Mild	No (1)	E	I	
54	SIS-PT-063	D - Safety Injection Pump Suction Pressure	R/B	13-3	Other	36hr	Mild	Mild	No (1)	E	I	
55	SIS-PT-064	A - Safety Injection Pump Discharge Pressure	R/B	13-3	Other	36hr	Mild	Mild	No (1)	E	I	
56	SIS-PT-065	B - Safety Injection Pump Discharge Pressure	R/B	13-3	Other	36hr	Mild	Mild	No (1)	E	I	
57	SIS-PT-066	C - Safety Injection Pump Discharge Pressure	R/B	13-3	Other	36hr	Mild	Mild	No (1)	E	I	
58	SIS-PT-067	D - Safety Injection Pump Discharge Pressure	R/B	13-3	Other	36hr	Mild	Mild	No (1)	E	I	
59	RHS-FT-011	A - Containment Spray / Residual Heat Removal Pump Discharge Flow	R/B	13-3	PAM, Other	2wks, 36hr	Mild	Mild	No (1)	E	I	(1)
60	RHS-FT-014	A - Containment Spray / Residual Heat Removal Pump Minimum Flow	R/B	13-3	PAM, Other	2wks, 36hr	Mild	Mild	No (1)	E	I	(1)

Table 3D-2 US-APWR Environmental Qualification Equipment List (Sheet 4 of 65)

Item Num	Equipment Tag	Description	Location		Purpose	Operational Duration	Environmental Conditions	Radiation Condition	Influence of Submergence for Total Integrated Dose	Qualification Process	Seismic Category	Comments
			Building	Zone	RT, ESF, PAM, Pressure Boundary (PB), Other(1)		Harsh or Mild	Harsh or Mild	Yes/No	E=Electrical M=Mechanical	I, II, Non	
61	RHS-FT-021	B – Containment Spray / Residual Heat Removal Pump Discharge Flow	R/B	13-3	PAM, Other	2wks, 36hr	Mild	Mild	No (1)	E	I	(1)
62	RHS-FT-024	B – Containment Spray / Residual Heat Removal Pump Minimum Flow	R/B	13-3	PAM, Other	2wks, 36hr	Mild	Mild	No (1)	E	I	(1)
63	RHS-FT-031	C – Containment Spray / Residual Heat Removal Pump Discharge Flow	R/B	13-3	PAM, Other	2wks, 36hr	Mild	Mild	No (1)	E	I	(1)
64	RHS-FT-034	C – Containment Spray / Residual Heat Removal Pump Minimum Flow	R/B	13-3	PAM, Other	2wks, 36hr	Mild	Mild	No (1)	E	I	(1)
65	RHS-FT-041	D – Containment Spray / Residual Heat Removal Pump Discharge Flow	R/B	13-3	PAM, Other	2wks, 36hr	Mild	Mild	No (1)	E	I	(1)
66	RHS-FT-044	D – Containment Spray / Residual Heat Removal Pump Minimum Flow	R/B	13-3	PAM, Other	2wks, 36hr	Mild	Mild	No (1)	E	I	(1)
67	RHS-PT-010	A – Containment Spray / Residual Heat Removal Pump Suction Pressure	R/B	13-3	Other	36hr	Mild	Mild	No (1)	E	I	
68	RHS-PT-011	A – Containment Spray / Residual Heat Removal Pump Discharge Pressure	R/B	13-3	Other	36hr	Mild	Mild	No (1)	E	I	
69	RHS-PT-020	B – Containment Spray / Residual Heat Removal Pump Suction Pressure	R/B	13-3	Other	36hr	Mild	Mild	No (1)	E	I	
70	RHS-PT-021	B – Containment Spray / Residual Heat Removal Pump Discharge Pressure	R/B	13-3	Other	36hr	Mild	Mild	No (1)	E	I	
71	RHS-PT-030	C – Containment Spray / Residual Heat Removal Pump Suction Pressure	R/B	13-3	Other	36hr	Mild	Mild	No (1)	E	I	
72	RHS-PT-031	C – Containment Spray / Residual Heat Removal Pump Discharge Pressure	R/B	13-3	Other	36hr	Mild	Mild	No (1)	E	I	
73	RHS-PT-040	D - Containment Spray / Residual Heat Removal Pump Suction Pressure	R/B	13-3	Other	36hr	Mild	Mild	No (1)	E	I	
74	RHS-PT-041	D - Containment Spray / Residual Heat Removal Pump Discharge Pressure	R/B	13-3	Other	36hr	Mild	Mild	No (1)	E	I	
75	EFS-FT-016	A - Emergency Feedwater Flow	R/B	8	PAM, Other	4mos, 36hr	Mild	Harsh	No (1)	E	I	
76	EFS-FT-026	B - Emergency Feedwater Flow	R/B	8	PAM, Other	4mos, 36hr	Mild	Harsh	No (1)	E	I	
77	EFS-FT-036	C - Emergency Feedwater Flow	R/B	8	PAM, Other	4mos, 36hr	Mild	Harsh	No (1)	E	I	
78	EFS-FT-046	D - Emergency Feedwater Flow	R/B	8	PAM, Other	4mos, 36hr	Mild	Harsh	No (1)	E	I	

Table 3D-2 US-APWR Environmental Qualification Equipment List (Sheet 5 of 65)

Item Num	Equipment Tag	Description	Location		Purpose	Operational Duration	Environmental Conditions	Radiation Condition	Influence of Submergence for Total Integrated Dose	Qualification Process	Seismic Category	Comments
			Building	Zone	RT, ESF, PAM, Pressure Boundary (PB), Other(1)		Harsh or Mild	Harsh or Mild	Yes/No	E=Electrical M=Mechanical	I, II, Non	
79	EFS-LT-060	A - Emergency Feedwater Pit Water Level	R/B	14	PAM, Other	2wks, 36hr	Mild	Mild	No (1)	E	I	(1)
80	EFS-LT-061	A - Emergency Feedwater Pit Water Level	R/B	14	PAM, Other	2wks, 36hr	Mild	Mild	No (1)	E	I	(1)
81	EFS-LT-070	B - Emergency Feedwater Pit Water Level	R/B	14	PAM, Other	2wks, 36hr	Mild	Mild	No (1)	E	I	(1)
82	EFS-LT-071	B - Emergency Feedwater Pit Water Level	R/B	14	PAM, Other	2wks, 36hr	Mild	Mild	No (1)	E	I	(1)
83	EFS-PT-052	A - Emergency Feedwater Pump Discharge Pressure	R/B	8	Other	36hr	Mild	Harsh	No (1)	E	I	
84	EFS-PT-050	B - Emergency Feedwater Pump Discharge Pressure	R/B	8	Other	36hr	Mild	Harsh	No (1)	E	I	
85	EFS-PT-051	C - Emergency Feedwater Pump Discharge Pressure	R/B	8	Other	36hr	Mild	Harsh	No (1)	E	I	
86	EFS-PT-053	D - Emergency Feedwater Pump Discharge Pressure	R/B	8	Other	36hr	Mild	Harsh	No (1)	E	I	
87	FWS-LT-510	A - Steam Generator Water Level (Narrow Range)	PCCV	1-6	RT, ESF, PAM	5min, 30min, 4mos	Harsh	Harsh	No (1)	E	I	
88	FWS-LT-511	A - Steam Generator Water Level (Narrow Range)	PCCV	1-6	RT, ESF, PAM	5min, 30min, 4mos	Harsh	Harsh	No (1)	E	I	
89	FWS-LT-512	A - Steam Generator Water Level (Narrow Range)	PCCV	1-6	RT, ESF, PAM	5min, 30min, 4mos	Harsh	Harsh	No (1)	E	I	
90	FWS-LT-513	A - Steam Generator Water Level (Narrow Range)	PCCV	1-6	RT, ESF, PAM	5min, 30min, 4mos	Harsh	Harsh	No (1)	E	I	
91	FWS-LT-514	A - Steam Generator Water Level (Wide Range)	PCCV	1-6	PAM, Other	4mos, 36hr	Harsh	Harsh	No (1)	E	I	
92	FWS-LT-520	B – Steam Generator Water Level (Narrow Range)	PCCV	1-6	RT, ESF, PAM	5min, 30min, 4mos	Harsh	Harsh	No (1)	E	I	
93	FWS-LT-521	B – Steam Generator Water Level (Narrow Range)	PCCV	1-6	RT, ESF, PAM	5min, 30min, 4mos	Harsh	Harsh	No (1)	E	I	
94	FWS-LT-522	B – Steam Generator Water Level (Narrow Range)	PCCV	1-6	RT, ESF, PAM	5min, 30min, 4mos	Harsh	Harsh	No (1)	E	I	
95	FWS-LT-523	B – Steam Generator Water Level (Narrow Range)	PCCV	1-6	RT, ESF, PAM	5min, 30min, 4mos	Harsh	Harsh	No (1)	E	I	
96	FWS-LT-524	B – Steam Generator Water Level (Wide Range)	PCCV	1-6	PAM, Other	4mos, 36hr	Harsh	Harsh	No (1)	E	I	
97	FWS-LT-530	C – Steam Generator Water Level (Narrow Range)	PCCV	1-6	RT, ESF, PAM	5min, 30min, 4mos	Harsh	Harsh	No (1)	E	I	
98	FWS-LT-531	C – Steam Generator Water Level (Narrow Range)	PCCV	1-6	RT, ESF, PAM	5min, 30min, 4mos	Harsh	Harsh	No (1)	E	I	
99	FWS-LT-532	C – Steam Generator Water Level (Narrow Range)	PCCV	1-6	RT, ESF, PAM	5min, 30min, 4mos	Harsh	Harsh	No (1)	E	I	
100	FWS-LT-533	C – Steam Generator Water Level (Narrow Range)	PCCV	1-6	RT, ESF, PAM	5min, 30min, 4mos	Harsh	Harsh	No (1)	E	I	
101	FWS-LT-534	C – Steam Generator Water Level (Wide Range)	PCCV	1-6	PAM, Other	4mos, 36hr	Harsh	Harsh	No (1)	E	I	
102	FWS-LT-540	D – Steam Generator Water Level (Narrow Range)	PCCV	1-6	RT, ESF, PAM	5min, 30min, 4mos	Harsh	Harsh	No (1)	E	I	
103	FWS-LT-541	D – Steam Generator Water Level (Narrow Range)	PCCV	1-6	RT, ESF, PAM	5min, 30min, 4mos	Harsh	Harsh	No (1)	E	I	

Table 3D-2 US-APWR Environmental Qualification Equipment List (Sheet 6 of 65)

Item Num	Equipment Tag	Description	Location		Purpose	Operational Duration	Environmental Conditions	Radiation Condition	Influence of Submergence for Total Integrated Dose	Qualification Process	Seismic Category	Comments
			Building	Zone	RT, ESF, PAM, Pressure Boundary (PB), Other(1)		Harsh or Mild	Harsh or Mild	Yes/No	E=Electrical M=Mechanical	I, II, Non	
104	FWS-LT-542	D – Steam Generator Water Level (Narrow Range)	PCCV	1-6	RT, ESF, PAM	5min, 30min, 4mos	Harsh	Harsh	No (1)	E	I	
105	FWS-LT-543	D – Steam Generator Water Level (Narrow Range)	PCCV	1-6	RT, ESF, PAM	5min, 30min, 4mos	Harsh	Harsh	No (1)	E	I	
106	FWS-LT-544	D – Steam Generator Water Level (Wide Range)	PCCV	1-6	PAM, Other	4mos, 36 hr	Harsh	Harsh	No (1)	E	I	
107	MSS-PT-515	A – Main Steam Line Pressure	R/B	14	ESF, PAM, Other	30min, 2wks, 36 hr	Mild	Mild	No (1)	E	I	(1)
108	MSS-PT-516	A – Main Steam Line Pressure	R/B	14	ESF, PAM, Other	30min, 2wks, 36hr	Mild	Mild	No (1)	E	I	(1)
109	MSS-PT-517	A – Main Steam Line Pressure	R/B	14	ESF, PAM, Other	30min, 2wks, 36hr	Mild	Mild	No (1)	E	I	(1)
110	MSS-PT-518	A – Main Steam Line Pressure	R/B	14	ESF, PAM, Other	30min, 2wks, 36hr	Mild	Mild	No (1)	E	I	(1)
111	MSS-PT-525	B – Main Steam Line Pressure	R/B	14	ESF, PAM, Other	30min, 2wks, 36hr	Mild	Mild	No (1)	E	I	(1)
112	MSS-PT-526	B – Main Steam Line Pressure	R/B	14	ESF, PAM, Other	30min, 2wks, 36hr	Mild	Mild	No (1)	E	I	(1)
113	MSS-PT-527	B – Main Steam Line Pressure	R/B	14	ESF, PAM, Other	30min, 2wks, 36hr	Mild	Mild	No (1)	E	I	(1)
114	MSS-PT-528	B – Main Steam Line Pressure	R/B	14	ESF, PAM, Other	30min, 2wks, 36hr	Mild	Mild	No (1)	E	I	(1)
115	MSS-PT-535	C – Main Steam Line Pressure	R/B	14	ESF, PAM, Other	30min, 2wks, 36hr	Mild	Mild	No (1)	E	I	(1)
116	MSS-PT-536	C – Main Steam Line Pressure	R/B	14	ESF, PAM, Other	30min, 2wks, 36hr	Mild	Mild	No (1)	E	I	(1)
117	MSS-PT-537	C – Main Steam Line Pressure	R/B	14	ESF, PAM, Other	30min, 2wks, 36hr	Mild	Mild	No (1)	E	I	(1)
118	MSS-PT-538	C – Main Steam Line Pressure	R/B	14	ESF, PAM, Other	30min, 2wks, 36hr	Mild	Mild	No (1)	E	I	(1)
119	MSS-PT-545	D – Main Steam Line Pressure	R/B	14	ESF, PAM, Other	30min, 2wks, 36hr	Mild	Mild	No (1)	E	I	(1)
120	MSS-PT-546	D – Main Steam Line Pressure	R/B	14	ESF, PAM, Other	30min, 2wks, 36hr	Mild	Mild	No (1)	E	I	(1)
121	MSS-PT-547	D – Main Steam Line Pressure	R/B	14	ESF, PAM, Other	30min, 2wks, 36hr	Mild	Mild	No (1)	E	I	(1)
122	MSS-PT-548	D – Main Steam Line Pressure	R/B	14	ESF, PAM, Other	30 min, 2wks, 36hr	Mild	Mild	No (1)	E	I	(1)
123	Deleted											
124	Deleted											
125	Deleted											
126	Deleted											
127	CSS-PT-010	Containment Pressure	PCCV, R/B	6	ESF, PAM	30min, 4mos	Harsh / Mild	Harsh	No (1)	E	I	Transmitter is located in RB

Table 3D-2 US-APWR Environmental Qualification Equipment List (Sheet 7 of 65)

Item Num	Equipment Tag	Description	Location		Purpose	Operational Duration	Environmental Conditions	Radiation Condition	Influence of Submergence for Total Integrated Dose	Qualification Process	Seismic Category	Comments
			Building	Zone	RT, ESF, PAM, Pressure Boundary (PB), Other(1)		Harsh or Mild	Harsh or Mild	Yes/No	E=Electrical M=Mechanical	I, II, Non	
128	CSS-PT-011	Containment Pressure	PCCV, R/B	6	ESF, PAM	30min, 4mos	Harsh / Mild	Harsh	No (1)	E	I	Transmitter is located in RB
129	CSS-PT-012	Containment Pressure	PCCV, R/B	6	ESF, PAM	30min, 4 mos	Harsh / Mild	Harsh	No (1)	E	I	Transmitter is located in RB
130	CSS-PT-013	Containment Pressure	PCCV, R/B	6	ESF, PAM	30min, 4mos	Harsh / Mild	Harsh	No (1)	E	I	Transmitter is located in RB
131	NCS-FT-034	A – Component Cooling Water Header Flow	R/B	8	Other	36hr	Mild	Harsh	No (1)	E	I	
132	NCS-FT-035	B – Component Cooling Water Header Flow	R/B	8	Other	36hr	Mild	Harsh	No (1)	E	I	
133	NCS-FT-037	C – Component Cooling Water Header Flow	R/B	8	Other	36hr	Mild	Harsh	No (1)	E	I	
134	NCS-FT-038	D – Component Cooling Water Header Flow	R/B	8	Other	36hr	Mild	Harsh	No (1)	E	I	
135	NCS-FT-129A	A- Reactor Coolant Pump Thermal Barrier Component Cooling Water Flow	PCCV	1-5	Other	5min*	Harsh	Harsh	No (1)	E	I	*Not Required Post Accident
136	NCS-FT-129B	A- Reactor Coolant Pump Thermal Barrier Component Cooling Water Flow	PCCV	1-5	Other	5min*	Harsh	Harsh	No (1)	E	I	*Not Required Post Accident
137	NCS-FT-130A	B- Reactor Coolant Pump Thermal Barrier Component Cooling Water Flow	PCCV	1-5	Other	5min*	Harsh	Harsh	No (1)	E	I	*Not Required Post Accident
138	NCS-FT-130B	B- Reactor Coolant Pump Thermal Barrier Component Cooling Water Flow	PCCV	1-5	Other	5min*	Harsh	Harsh	No (1)	E	I	*Not Required Post Accident
139	NCS-FT-131A	C- Reactor Coolant Pump Thermal Barrier Component Cooling Water Flow	PCCV	1-5	Other	5min*	Harsh	Harsh	No (1)	E	I	*Not Required Post Accident
140	NCS-FT-131B	C- Reactor Coolant Pump Thermal Barrier Component Cooling Water Flow	PCCV	1-5	Other	5min*	Harsh	Harsh	No (1)	E	I	*Not Required Post Accident
141	NCS-FT-132A	D- Reactor Coolant Pump Thermal Barrier Component Cooling Water Flow	PCCV	1-5	Other	5min*	Harsh	Harsh	No (1)	E	I	*Not Required Post Accident
142	NCS-FT-132B	D- Reactor Coolant Pump Thermal Barrier Component Cooling Water Flow	PCCV	1-5	Other	5min*	Harsh	Harsh	No (1)	E	I	*Not Required Post Accident
143	NCS-LT-010A	A – Component Cooling Water Surge Tank Water Level	R/B	8	Other	36hr	Mild	Harsh	No (1)	E	I	
144	NCS-LT-010B	A - Component Cooling Water Surge Tank Water Level	R/B	8	Other	36hr	Mild	Harsh	No (1)	E	I	
145	NCS-LT-010C	B - Component Cooling Water Surge Tank Water Level	R/B	8	Other	36hr	Mild	Harsh	No (1)	E	I	

Table 3D-2 US-APWR Environmental Qualification Equipment List (Sheet 8 of 65)

Item Num	Equipment Tag	Description	Location		Purpose	Operational Duration	Environmental Conditions	Radiation Condition	Influence of Submergence for Total Integrated Dose	Qualification Process	Seismic Category	Comments
			Building	Zone	RT, ESF, PAM, Pressure Boundary (PB), Other(1)		Harsh or Mild	Harsh or Mild	Yes/No	E=Electrical M=Mechanical	I, II, Non	
146	NCS-LT-010D	B - Component Cooling Water Surge Tank Water Level	R/B	8	Other	36hr	Mild	Harsh	No (1)	E	I	
147	NCS-PT-030	A - Component Cooling Water Header Pressure	R/B	8	PAM, Other	4mos, 36hr	Mild	Harsh	No (1)	E	I	
148	NCS-PT-031	B - Component Cooling Water Header Pressure	R/B	8	PAM, Other	4mos, 36hr	Mild	Harsh	No (1)	E	I	
149	NCS-PT-032	C - Component Cooling Water Header Pressure	R/B	8	PAM, Other	4mos, 36hr	Mild	Harsh	No (1)	E	I	
150	NCS-PT-033	D - Component Cooling Water Header Pressure	R/B	8	PAM, Other	4mos, 36hr	Mild	Harsh	No (1)	E	I	
151	SFS-LT-010	SFP water level (Narrow range)	R/B	12	Other	1 yr	Mild	Harsh	No (1)	E	I	
152	SFS-LT-020	SFP water level (Narrow range)	R/B	12	Other	1 yr	Mild	Harsh	No (1)	E	I	
153	SFS-LT-030	SFP water level (Wide range)	R/B	12	Other	1 yr	Mild	Harsh	No (1)	E	I	
154	SFS-LT-040	SFP water level (Wide range)	R/B	12	Other	1 yr	Mild	Harsh	No (1)	E	I	
155	SFS-FT-032	A-SFP pump discharge flow	R/B	7	Other	1 yr	Mild	Harsh	No (1)	E	I	
156	SFS-FT-042	B-SFP pump discharge flow	R/B	7	Other	1 yr	Mild	Harsh	No (1)	E	I	
157	EWS-FT-034	A - Component Cooling Water Heat Exchanger Essential Service Water Flow	R/B	8	Other	36hr	Mild	Harsh	No (1)	E	I	
158	EWS-FT-035	B - Component Cooling Water Heat Exchanger Essential Service Water Flow	R/B	8	Other	36hr	Mild	Harsh	No (1)	E	I	
159	EWS-FT-036	C - Component Cooling Water Heat Exchanger Essential Service Water Flow	R/B	8	Other	36hr	Mild	Harsh	No (1)	E	I	
160	EWS-FT-037	D - Component Cooling Water Heat Exchanger Essential Service Water Flow	R/B	8	Other	36hr	Mild	Harsh	No (1)	E	I	
161	EWS-PT-015	A - Essential Service Water Header Pressure	UHSRS	-	PAM, Other	2wks, 36hr	Mild	-	-	E	I	(1)
162	EWS-PT-016	B - Essential Service Water Header Pressure	UHSRS	-	PAM, Other	2wks, 36hr	Mild	-	-	E	I	(1)
163	EWS-PT-017	C - Essential Service Water Header Pressure	UHSRS	-	PAM, Other	2wks, 36hr	Mild	-	-	E	I	(1)
164	EWS-PT-018	D - Essential Service Water Header Pressure	UHSRS	-	PAM, Other	2wks, 36hr	Mild	-	-	E	I	(1)
165	RWS-LT-010	Refueling Water Storage Pit Water Level (Narrow Range)	PCCV	1-5	PAM	4mos	Harsh	Harsh	No (1)	E	I	
166	RWS-LT-011	Refueling Water Storage Pit Water Level (Wide Range)	PCCV	1-5	PAM, Other	4mos, 36hr	Harsh	Harsh	No (1)	E	I	

Table 3D-2 US-APWR Environmental Qualification Equipment List (Sheet 9 of 65)

Item Num	Equipment Tag	Description	Location		Purpose	Operational Duration	Environmental Conditions	Radiation Condition	Influence of Submergence for Total Integrated Dose	Qualification Process	Seismic Category	Comments
			Building	Zone	RT, ESF, PAM, Pressure Boundary (PB), Other(1)		Harsh or Mild	Harsh or Mild	Yes/No	E=Electrical M=Mechanical	I, II, Non	
167	RWS-LT-012	Refueling Water Storage Pit Water Level (Narrow Range)	PCCV	1-5	PAM	4mos	Harsh	Harsh	No (1)	E	I	
168	RWS-LT-013	Refueling Water Storage Pit Water Level (Wide Range)	PCCV	1-5	PAM, Other	4mos, 36hr	Harsh	Harsh	No (1)	E	I	
169	Deleted											
170	Deleted											
171	NCS-LT-011A	A - Component Cooling Water Surge Tank Water Level	R/B	8	Other	36hr	Mild	Harsh	No (1)	E	I	
172	NCS-LT-011B	A - Component Cooling Water Surge Tank Water Level	R/B	8	Other	36hr	Mild	Harsh	No (1)	E	I	
173	NCS-LT-011C	B - Component Cooling Water Surge Tank Water Level	R/B	8	Other	36hr	Mild	Harsh	No (1)	E	I	
174	NCS-LT-011D	B - Component Cooling Water Surge Tank Water Level	R/B	8	Other	36hr	Mild	Harsh	No (1)	E	I	
175	NCS-PT-025	A - Component Cooling Water Pump Discharge Pressure 1	R/B	8	ESF	36hr	Mild	Harsh	No (1)	E	I	
176	NCS-PT-026	B - Component Cooling Water Pump Discharge Pressure 1	R/B	8	ESF	36hr	Mild	Harsh	No (1)	E	I	
177	NCS-PT-027	C - Component Cooling Water Pump Discharge Pressure 1	R/B	8	ESF	36hr	Mild	Harsh	No (1)	E	I	
178	NCS-PT-028	D - Component Cooling Water Pump Discharge Pressure 1	R/B	8	ESF	36hr	Mild	Harsh	No (1)	E	I	
179	NCS-PT-035	A - Component Cooling Water Pump Discharge Pressure 2	R/B	8	ESF	36hr	Mild	Harsh	No (1)	E	I	
180	NCS-PT-036	B - Component Cooling Water Pump Discharge Pressure 2	R/B	8	ESF	36hr	Mild	Harsh	No (1)	E	I	
181	NCS-PT-037	C - Component Cooling Water Pump Discharge Pressure 2	R/B	8	ESF	36hr	Mild	Harsh	No (1)	E	I	
182	NCS-PT-038	D - Component Cooling Water Pump Discharge Pressure 2	R/B	8	ESF	36hr	Mild	Harsh	No (1)	E	I	
183	RCS-LT-014	C-Loop Main Coolant Pipe Water Level	PCCV	1-5	Other	2wks*	Harsh	Harsh	No (1)	E	I	*Not Required Post Accident

Table 3D-2 US-APWR Environmental Qualification Equipment List (Sheet 10 of 65)

Item Num	Equipment Tag	Description	Location		Purpose	Operational Duration	Environmental Conditions	Radiation Condition	Influence of Submergence for Total Integrated Dose	Qualification Process	Seismic Category	Comments
			Building	Zone	RT, ESF, PAM, Pressure Boundary (PB), Other(1)		Harsh or Mild	Harsh or Mild	Yes/No	E=Electrical M=Mechanical	I, II, Non	
184	RCS-LT-015	D-Loop Main Coolant Pipe Water Level	PCCV	1-5	Other	2wks*	Harsh	Harsh	No (1)	E	I	*Not Required Post Accident
185	CVS-FT-048	Charging Flow	R/B	13-3	PAM	2wks	Mild	Mild	No (2)	E	I	(1)
186	CVS-FT-049	Charging Flow	R/B	13-3	PAM	2wks	Mild	Mild	No (2)	E	I	(1)
Instruments (Resistance Temperature Detectors)												
1	RCS-TE-020	Loop A - Reactor Coolant Hot Leg Temperature (Wide Range)	PCCV	1-3	PAM, Other	4mos, 36hr	Harsh	Harsh	No (1)	E	I	
2	RCS-TE-021A	Loop A - Reactor Coolant Hot Leg Temperature (Narrow Range)	PCCV	1-3	RT	5min	Harsh	Harsh	No (1)	E	I	
3	RCS-TE-021B	Loop A - Reactor Coolant Hot Leg Temperature (Narrow Range)	PCCV	1-3	RT	5min	Harsh	Harsh	No (1)	E	I	
4	RCS-TE-021C	Loop A - Reactor Coolant Hot Leg Temperature (Narrow Range)	PCCV	1-3	RT	5min	Harsh	Harsh	No (1)	E	I	
5	RCS-TE-021D	Loop A - Reactor Coolant Cold Leg Temperature (Narrow Range)	PCCV	1-3	RT	5min	Harsh	Harsh	No (1)	E	I	
6	RCS-TE-023A	Loop A - Reactor Coolant Hot Leg Temperature (Narrow Range) (spare)	PCCV	1-3	RT	5min	Harsh	Harsh	No (1)	E	I	
7	RCS-TE-023B	Loop A - Reactor Coolant Hot Leg Temperature (Narrow Range) (spare)	PCCV	1-3	RT	5min	Harsh	Harsh	No (1)	E	I	
8	RCS-TE-023C	Loop A - Reactor Coolant Hot Leg Temperature (Narrow Range) (spare)	PCCV	1-3	RT	5min	Harsh	Harsh	No (1)	E	I	
9	RCS-TE-023D	Loop A - Reactor Coolant Cold Leg Temperature (Narrow Range) (spare)	PCCV	1-3	RT	5min	Harsh	Harsh	No (1)	E	I	
10	RCS-TE-025	Loop A - Reactor Coolant Cold Leg Temperature (Wide Range)	PCCV	1-3	PAM, Other	4mos, 36hr	Harsh	Harsh	No (1)	E	I	
11	RCS-TE-030	Loop B - Reactor Coolant Hot Leg Temperature (Wide Range)	PCCV	1-3	PAM, Other	4mos, 36hr	Harsh	Harsh	No (1)	E	I	
12	RCS-TE-031A	Loop B - Reactor Coolant Hot Leg Temperature (Narrow Range)	PCCV	1-3	RT	5min	Harsh	Harsh	No (1)	E	I	
13	RCS-TE-031B	Loop B - Reactor Coolant Hot Leg Temperature (Narrow Range)	PCCV	1-3	RT	5min	Harsh	Harsh	No (1)	E	I	

Table 3D-2 US-APWR Environmental Qualification Equipment List (Sheet 11 of 65)

Item Num	Equipment Tag	Description	Location		Purpose	Operational Duration	Environmental Conditions	Radiation Condition	Influence of Submergence for Total Integrated Dose	Qualification Process	Seismic Category	Comments
			Building	Zone	RT, ESF, PAM, Pressure Boundary (PB), Other(1)		Harsh or Mild	Harsh or Mild	Yes/No	E=Electrical M=Mechanical	I, II, Non	
14	RCS-TE-031C	Loop B - Reactor Coolant Hot Leg Temperature (Narrow Range)	PCCV	1-3	RT	5min	Harsh	Harsh	No (1)	E	I	
15	RCS-TE-031D	Loop B - Reactor Coolant Cold Leg Temperature (Narrow Range)	PCCV	1-3	RT	5min	Harsh	Harsh	No (1)	E	I	
16	RCS-TE-033A	Loop B - Reactor Coolant Hot Leg Temperature (Narrow Range) (spare)	PCCV	1-3	RT	5min	Harsh	Harsh	No (1)	E	I	
17	RCS-TE-033B	Loop B - Reactor Coolant Hot Leg Temperature (Narrow Range) (spare)	PCCV	1-3	RT	5min	Harsh	Harsh	No (1)	E	I	
18	RCS-TE-033C	Loop B - Reactor Coolant Hot Leg Temperature (Narrow Range) (spare)	PCCV	1-3	RT	5min	Harsh	Harsh	No (1)	E	I	
19	RCS-TE-033D	Loop B - Reactor Coolant Cold Leg Temperature (Narrow Range) (spare)	PCCV	1-3	RT	5min	Harsh	Harsh	No (1)	E	I	
20	RCS-TE-035	Loop B - Reactor Coolant Cold Leg Temperature (Wide Range)	PCCV	1-3	PAM, Other	4mos, 36hr	Harsh	Harsh	No (1)	E	I	
21	RCS-TE-040	Loop C - Reactor Coolant Hot Leg Temperature (Wide Range)	PCCV	1-3	PAM, Other	4mos, 36hr	Harsh	Harsh	No (1)	E	I	
22	RCS-TE-041A	Loop C - Reactor Coolant Hot Leg Temperature (Narrow Range)	PCCV	1-3	RT	5min	Harsh	Harsh	No (1)	E	I	
23	RCS-TE-041B	Loop C - Reactor Coolant Hot Leg Temperature (Narrow Range)	PCCV	1-3	RT	5min	Harsh	Harsh	No (1)	E	I	
24	RCS-TE-041C	Loop C - Reactor Coolant Hot Leg Temperature (Narrow Range)	PCCV	1-3	RT	5min	Harsh	Harsh	No (1)	E	I	
25	RCS-TE-041D	Loop C - Reactor Coolant Cold Leg Temperature (Narrow Range)	PCCV	1-3	RT	5min	Harsh	Harsh	No (1)	E	I	
26	RCS-TE-043A	Loop C - Reactor Coolant Hot Leg Temperature (Narrow Range) (spare)	PCCV	1-3	RT	5min	Harsh	Harsh	No (1)	E	I	
27	RCS-TE-043B	Loop C - Reactor Coolant Hot Leg Temperature (Narrow Range) (spare)	PCCV	1-3	RT	5min	Harsh	Harsh	No (1)	E	I	
28	RCS-TE-043C	Loop C - Reactor Coolant Hot Leg Temperature (Narrow Range) (spare)	PCCV	1-3	RT	5min	Harsh	Harsh	No (1)	E	I	
29	RCS-TE-043D	Loop C - Reactor Coolant Cold Leg Temperature (Narrow Range) (spare)	PCCV	1-3	RT	5min	Harsh	Harsh	No (1)	E	I	

Table 3D-2 US-APWR Environmental Qualification Equipment List (Sheet 12 of 65)

Item Num	Equipment Tag	Description	Location		Purpose	Operational Duration	Environmental Conditions	Radiation Condition	Influence of Submergence for Total Integrated Dose	Qualification Process	Seismic Category	Comments
			Building	Zone	RT, ESF, PAM, Pressure Boundary (PB), Other(1)		Harsh or Mild	Harsh or Mild	Yes/No	E=Electrical M=Mechanical	I, II, Non	
30	RCS-TE-045	Loop C - Reactor Coolant Cold Leg Temperature (Wide Range)	PCCV	1-3	PAM, Other	4mos, 36hr	Harsh	Harsh	No (1)	E	I	
31	RCS-TE-050	Loop D - Reactor Coolant Hot Leg Temperature (Wide Range)	PCCV	1-3	PAM, Other	4mos, 36hr	Harsh	Harsh	No (1)	E	I	
32	RCS-TE-051A	Loop D - Reactor Coolant Hot Leg Temperature (Narrow Range)	PCCV	1-3	RT	5min	Harsh	Harsh	No (1)	E	I	
33	RCS-TE-051B	Loop D - Reactor Coolant Hot Leg Temperature (Narrow Range)	PCCV	1-3	RT	5min	Harsh	Harsh	No (1)	E	I	
34	RCS-TE-051C	Loop D - Reactor Coolant Hot Leg Temperature (Narrow Range)	PCCV	1-3	RT	5min	Harsh	Harsh	No (1)	E	I	
35	RCS-TE-051D	Loop D - Reactor Coolant Cold Leg Temperature (Narrow Range)	PCCV	1-3	RT	5min	Harsh	Harsh	No (1)	E	I	
36	RCS-TE-053A	Loop D - Reactor Coolant Hot Leg Temperature (Narrow Range) (spare)	PCCV	1-3	RT	5min	Harsh	Harsh	No (1)	E	I	
37	RCS-TE-053B	Loop D - Reactor Coolant Hot Leg Temperature (Narrow Range) (spare)	PCCV	1-3	RT	5min	Harsh	Harsh	No (1)	E	I	
38	RCS-TE-053C	Loop D - Reactor Coolant Hot Leg Temperature (Narrow Range) (spare)	PCCV	1-3	RT	5min	Harsh	Harsh	No (1)	E	I	
39	RCS-TE-053D	Loop D - Reactor Coolant Cold Leg Temperature (Narrow Range) (spare)	PCCV	1-3	RT	5min	Harsh	Harsh	No (1)	E	I	
40	RCS-TE-055	Loop D - Reactor Coolant Cold Leg Temperature (Wide Range)	PCCV	1-3	PAM, Other	4mos, 36hr	Harsh	Harsh	No (1)	E	I	
41	RHS-TE-014	A - Containment Spray / Residual Heat Removal Heat Exchanger Outlet Temperature	R/B	6	Other	36hr	Mild	Harsh	No (1)	E	I	
42	RHS-TE-024	B - Containment Spray / Residual Heat Removal Heat Exchanger Outlet Temperature	R/B	6	Other	36hr	Mild	Harsh	No (1)	E	I	
43	RHS-TE-034	C - Containment Spray / Residual Heat Removal Heat Exchanger Outlet Temperature	R/B	6	Other	36hr	Mild	Harsh	No (1)	E	I	
44	RHS-TE-044	D - Containment Spray / Residual Heat Removal Heat Exchanger Outlet Temperature	R/B	6	Other	36hr	Mild	Harsh	No (1)	E	I	
45	CSS-TE-020	Containment Temperature	PCCV	1-6	PAM	4mos	Harsh	Harsh	No (1)	E	I	
46	NCS-TE-025	A - Component Cooling Water Supply Temperature	R/B	8	Other	36hr	Mild	Harsh	No (1)	E	I	

Table 3D-2 US-APWR Environmental Qualification Equipment List (Sheet 13 of 65)

Item Num	Equipment Tag	Description	Location		Purpose	Operational Duration	Environmental Conditions	Radiation Condition	Influence of Submergence for Total Integrated Dose	Qualification Process	Seismic Category	Comments
			Building	Zone	RT, ESF, PAM, Pressure Boundary (PB), Other(1)		Harsh or Mild	Harsh or Mild	Yes/No	E=Electrical M=Mechanical	I, II, Non	
47	NCS-TE-026	B - Component Cooling Water Supply Temperature	R/B	8	Other	36hr	Mild	Harsh	No (1)	E	I	
48	NCS-TE-027	C - Component Cooling Water Supply Temperature	R/B	8	Other	36hr	Mild	Harsh	No (1)	E	I	
49	NCS-TE-028	D - Component Cooling Water Supply Temperature	R/B	8	Other	36hr	Mild	Harsh	No (1)	E	I	
50	SFS-TE-010	SFP temperature	R/B	12	Other	1 yr	Mild	Harsh	No (1)	E	I	
51	SFS-TE-020	SFP temperature	R/B	12	Other	1 yr	Mild	Harsh	No (1)	E	I	
Instruments (Speed Sensors)												
1	RCS-SE-028A	A - Reactor Coolant Pump Speed	PCCV	1-4	RT	5min*	Harsh	Harsh	No (1)	E	I	*Not required post accident
2	RCS-SE-028B	A - Reactor Coolant Pump Speed (spare)	PCCV	1-4	RT	5min*	Harsh	Harsh	No (1)	E	I	*Not required post accident
3	RCS-SE-038A	B - Reactor Coolant Pump Speed	PCCV	1-4	RT	5min*	Harsh	Harsh	No (1)	E	I	*Not required post accident
4	RCS-SE-038B	B - Reactor Coolant Pump Speed (spare)	PCCV	1-4	RT	5min*	Harsh	Harsh	No (1)	E	I	*Not required post accident
5	RCS-SE-048A	C - Reactor Coolant Pump Speed	PCCV	1-4	RT	5min*	Harsh	Harsh	No (1)	E	I	*Not required post accident
6	RCS-SE-048B	C - Reactor Coolant Pump Speed (spare)	PCCV	1-4	RT	5min*	Harsh	Harsh	No (1)	E	I	*Not required post accident
7	RCS-SE-058A	D - Reactor Coolant Pump Speed	PCCV	1-4	RT	5min*	Harsh	Harsh	No (1)	E	I	*Not required post accident
8	RCS-SE-058B	D - Reactor Coolant Pump Speed (spare)	PCCV	1-4	RT	5min*	Harsh	Harsh	No (1)	E	I	*Not required post accident
Instruments (Neutron Detectors)												
1	NIS-NE-031	Source Range Neutron Flux	PCCV	1-2	RT, Other	5min*, 36hr*	Harsh	Harsh	No (2)	E	I	*Not required post accident
2	NIS-NE-032	Source Range Neutron Flux	PCCV	1-2	RT, Other	5min*, 36hr*	Harsh	Harsh	No (2)	E	I	*Not required post accident
3	NIS-NE-035	Intermediate Range Neutron Flux	PCCV	1-2	RT	5min*	Harsh	Harsh	No (1)	E	I	*Not required post accident
4	NIS-NE-036	Intermediate Range Neutron Flux	PCCV	1-2	RT	5min*	Harsh	Harsh	No (1)	E	I	*Not required post accident

Table 3D-2 US-APWR Environmental Qualification Equipment List (Sheet 14 of 65)

Item Num	Equipment Tag	Description	Location		Purpose	Operational Duration	Environmental Conditions	Radiation Condition	Influence of Submergence for Total Integrated Dose	Qualification Process	Seismic Category	Comments
			Building	Zone	RT, ESF, PAM, Pressure Boundary (PB), Other(1)		Harsh or Mild	Harsh or Mild	Yes/No	E=Electrical M=Mechanical	I, II, Non	
5	NIS-NE-041A	Power Range Neutron Flux (Upper)	PCCV	1-2	RT	5min*	Harsh	Harsh	No (1)	E	I	*Not required post accident
6	NIS-NE-041B	Power Range Neutron Flux (Lower)	PCCV	1-2	RT	5min*	Harsh	Harsh	No (2)	E	I	*Not required post accident
7	NIS-NE-042A	Power Range Neutron Flux (Upper)	PCCV	1-2	RT	5min*	Harsh	Harsh	No (1)	E	I	*Not required post accident
8	NIS-NE-042B	Power Range Neutron Flux (Lower)	PCCV	1-2	RT	5min*	Harsh	Harsh	No (2)	E	I	*Not required post accident
9	NIS-NE-043A	Power Range Neutron Flux (Upper)	PCCV	1-2	RT	5min*	Harsh	Harsh	No (1)	E	I	*Not required post accident
10	NIS-NE-043B	Power Range Neutron Flux (Lower)	PCCV	1-2	RT	5min*	Harsh	Harsh	No (2)	E	I	*Not required post accident
11	NIS-NE-044A	Power Range Neutron Flux (Upper)	PCCV	1-2	RT	5min*	Harsh	Harsh	No (1)	E	I	*Not required post accident
12	NIS-NE-044B	Power Range Neutron Flux (Lower)	PCCV	1-2	RT	5min*	Harsh	Harsh	No (2)	E	I	*Not required post accident
13	NIS-NE-033	Wide Range Neutron Flux	PCCV	1-2	PAM	4mos	Harsh	Harsh	No (1)	E	I	
14	NIS-NE-034	Wide Range Neutron Flux	PCCV	1-2	PAM	4mos	Harsh	Harsh	No (1)	E	I	
Instruments (Thermocouples)												
1	RCS-LE-181	Reactor Vessel Water Level	PCCV	1-3	PAM	4mos	Harsh	Harsh	No (1)	E	I	Heated Junction Thermocouples
2	RCS-LE-182	Reactor Vessel Water Level	PCCV	1-3	PAM	4mos	Harsh	Harsh	No (1)	E	I	Heated Junction Thermocouples
3	ICT-TE-001	Core Exit Temperature	PCCV	1-3	PAM	4mos	Harsh	Harsh	No (1)	E	I	
4	ICT-TE-002	Core Exit Temperature	PCCV	1-3	PAM	4mos	Harsh	Harsh	No (1)	E	I	
5	ICT-TE-003	Core Exit Temperature	PCCV	1-3	PAM	4mos	Harsh	Harsh	No (1)	E	I	
6	ICT-TE-004	Core Exit Temperature	PCCV	1-3	PAM	4mos	Harsh	Harsh	No (1)	E	I	
7	ICT-TE-005	Core Exit Temperature	PCCV	1-3	PAM	4mos	Harsh	Harsh	No (1)	E	I	
8	ICT-TE-006	Core Exit Temperature	PCCV	1-3	PAM	4mos	Harsh	Harsh	No (1)	E	I	

Table 3D-2 US-APWR Environmental Qualification Equipment List (Sheet 15 of 65)

Item Num	Equipment Tag	Description	Location		Purpose	Operational Duration	Environmental Conditions	Radiation Condition	Influence of Submergence for Total Integrated Dose	Qualification Process	Seismic Category	Comments
			Building	Zone	RT, ESF, PAM, Pressure Boundary (PB), Other(1)		Harsh or Mild	Harsh or Mild	Yes/No	E=Electrical M=Mechanical	I, II, Non	
9	ICT-TE-007	Core Exit Temperature	PCCV	1-3	PAM	4mos	Harsh	Harsh	No (1)	E	I	
10	ICT-TE-008	Core Exit Temperature	PCCV	1-3	PAM	4mos	Harsh	Harsh	No (1)	E	I	
11	ICT-TE-009	Core Exit Temperature	PCCV	1-3	PAM	4mos	Harsh	Harsh	No (1)	E	I	
12	ICT-TE-010	Core Exit Temperature	PCCV	1-3	PAM	4mos	Harsh	Harsh	No (1)	E	I	
13	ICT-TE-011	Core Exit Temperature	PCCV	1-3	PAM	4mos	Harsh	Harsh	No (1)	E	I	
14	ICT-TE-012	Core Exit Temperature	PCCV	1-3	PAM	4mos	Harsh	Harsh	No (1)	E	I	
15	ICT-TE-013	Core Exit Temperature	PCCV	1-3	PAM	4mos	Harsh	Harsh	No (1)	E	I	
16	ICT-TE-014	Core Exit Temperature	PCCV	1-3	PAM	4mos	Harsh	Harsh	No (1)	E	I	
17	ICT-TE-015	Core Exit Temperature	PCCV	1-3	PAM	4mos	Harsh	Harsh	No (1)	E	I	
18	ICT-TE-016	Core Exit Temperature	PCCV	1-3	PAM	4mos	Harsh	Harsh	No (1)	E	I	
19	ICT-TE-017	Core Exit Temperature	PCCV	1-3	PAM	4mos	Harsh	Harsh	No (1)	E	I	(spare)
20	ICT-TE-018	Core Exit Temperature	PCCV	1-3	PAM	4mos	Harsh	Harsh	No (1)	E	I	(spare)
21	ICT-TE-019	Core Exit Temperature	PCCV	1-3	PAM	4mos	Harsh	Harsh	No (1)	E	I	(spare)
22	ICT-TE-020	Core Exit Temperature	PCCV	1-3	PAM	4mos	Harsh	Harsh	No (1)	E	I	(spare)
23	ICT-TE-021	Core Exit Temperature	PCCV	1-3	PAM	4mos	Harsh	Harsh	No (1)	E	I	(spare)
24	ICT-TE-022	Core Exit Temperature	PCCV	1-3	PAM	4mos	Harsh	Harsh	No (1)	E	I	(spare)
25	ICT-TE-023	Core Exit Temperature	PCCV	1-3	PAM	4mos	Harsh	Harsh	No (1)	E	I	(spare)
26	ICT-TE-024	Core Exit Temperature	PCCV	1-3	PAM	4mos	Harsh	Harsh	No (1)	E	I	(spare)
27	ICT-TE-025	Core Exit Temperature	PCCV	1-3	PAM	4mos	Harsh	Harsh	No (1)	E	I	(spare)
28	ICT-TE-026	Core Exit Temperature	PCCV	1-3	PAM	4mos	Harsh	Harsh	No (1)	E	I	(spare)
Instruments (Radiation Monitors)												
1	RMS-RE-083A	Main Control Room Outside Air Intake Particulate Radiation	R/B	14	ESF	5min	Mild	Mild	No (1)	E	I	
2	RMS-RE-083B	Main Control Room Outside Air Intake Particulate Radiation	R/B	14	ESF	5min	Mild	Mild	No (1)	E	I	
3	RMS-RE-084A	Main Control Room Outside Air Intake Gas Radiation	R/B	14	ESF	5min	Mild	Mild	No (1)	E	I	

Table 3D-2 US-APWR Environmental Qualification Equipment List (Sheet 16 of 65)

Item Num	Equipment Tag	Description	Location		Purpose	Operational Duration	Environmental Conditions	Radiation Condition	Influence of Submergence for Total Integrated Dose	Qualification Process	Seismic Category	Comments
			Building	Zone	RT, ESF, PAM, Pressure Boundary (PB), Other(1)		Harsh or Mild	Harsh or Mild	Yes/No	E=Electrical M=Mechanical	I, II, Non	
4	RMS-RE-084B	Main Control Room Outside Air Intake Gas Radiation	R/B	14	ESF	5min	Mild	Mild	No (1)	E	I	
5	RMS-RE-085A	Main Control Room Outside Air Intake Iodine Radiation	R/B	14	ESF	5min	Mild	Mild	No (1)	E	I	
6	RMS-RE-085B	Main Control Room Outside Air Intake Iodine Radiation	R/B	14	ESF	5min	Mild	Mild	No (1)	E	I	
7	RMS-RE-091A	Containment High Range Area Radiation	PCCV	1-6	ESF, PAM	5min, 4mos	Harsh	Harsh	No (1)	E	I	
8	RMS-RE-091B	Containment High Range Area Radiation	PCCV	1-6	ESF, PAM	5min, 4mos	Harsh	Harsh	No (1)	E	I	
9	RMS-RE-092A	Containment High Range Area Radiation	PCCV	1-6	ESF, PAM	5min, 4mos	Harsh	Harsh	No (1)	E	I	
10	RMS-RE-092B	Containment High Range Area Radiation	PCCV	1-6	ESF, PAM	5min, 4mos	Harsh	Harsh	No (1)	E	I	
11	RMS-RE-093A	Containment High Range Area Radiation	PCCV	1-6	ESF, PAM	5min, 4mos	Harsh	Harsh	No (1)	E	I	
12	RMS-RE-093B	Containment High Range Area Radiation	PCCV	1-6	ESF, PAM	5min, 4mos	Harsh	Harsh	No (1)	E	I	
13	RMS-RE-094A	Containment High Range Area Radiation	PCCV	1-6	ESF, PAM	5min, 4mos	Harsh	Harsh	No (1)	E	I	
14	RMS-RE-094B	Containment High Range Area Radiation	PCCV	1-6	ESF, PAM	5min, 4mos	Harsh	Harsh	No (1)	E	I	
15	Deleted											
Instruments (Switches)												
1	VRS-TS-621	A - Penetration Area Temperature	R/B	6	Other	1yr	Mild	Harsh	No (1)	E	I	
2	VRS-TS-624	A - Penetration Area Temperature	R/B	6	Other	1yr	Mild	Harsh	No (1)	E	I	
3	VRS-TS-625	A - Penetration Area Temperature	R/B	6	Other	1yr	Mild	Harsh	No (1)	E	I	
4	VRS-TS-631	B - Penetration Area Temperature	R/B	6	Other	1yr	Mild	Harsh	No (1)	E	I	
5	VRS-TS-634	B - Penetration Area Temperature	R/B	6	Other	1yr	Mild	Harsh	No (1)	E	I	
6	VRS-TS-635	B - Penetration Area Temperature	R/B	6	Other	1yr	Mild	Harsh	No (1)	E	I	
7	VRS-TS-641	C - Penetration Area Temperature	R/B	6	Other	1yr	Mild	Harsh	No (1)	E	I	
8	VRS-TS-644	C - Penetration Area Temperature	R/B	6	Other	1yr	Mild	Harsh	No (1)	E	I	
9	VRS-TS-645	C - Penetration Area Temperature	R/B	6	Other	1yr	Mild	Harsh	No (1)	E	I	
10	VRS-TS-651	D - Penetration Area Temperature	R/B	6	Other	1yr	Mild	Harsh	No (1)	E	I	
11	VRS-TS-654	D - Penetration Area Temperature	R/B	6	Other	1yr	Mild	Harsh	No (1)	E	I	

Table 3D-2 US-APWR Environmental Qualification Equipment List (Sheet 17 of 65)

Item Num	Equipment Tag	Description	Location		Purpose	Operational Duration	Environmental Conditions	Radiation Condition	Influence of Submergence for Total Integrated Dose	Qualification Process	Seismic Category	Comments
			Building	Zone	RT, ESF, PAM, Pressure Boundary (PB), Other(1)		Harsh or Mild	Harsh or Mild	Yes/No	E=Electrical M=Mechanical	I, II, Non	
12	VRS-TS-655	D - Penetration Area Temperature	R/B	6	Other	1yr	Mild	Harsh	No (1)	E	I	
13	VRS-TS-306	A - Safeguard Component Area Temperature	R/B	6	Other	1yr	Mild	Harsh	No (1)	E	I	
14	VRS-TS-307	A - Safeguard Component Area Temperature	R/B	6	Other	1yr	Mild	Harsh	No (1)	E	I	
15	VRS-TS-305	A - Safeguard Component Area Temperature	R/B	6	Other	1yr	Mild	Harsh	No (1)	E	I	
16	VRS-TS-316	B - Safeguard Component Area Temperature	R/B	6	Other	1yr	Mild	Harsh	No (1)	E	I	
17	VRS-TS-317	B - Safeguard Component Area Temperature	R/B	6	Other	1yr	Mild	Harsh	No (1)	E	I	
18	VRS-TS-315	B - Safeguard Component Area Temperature	R/B	6	Other	1yr	Mild	Harsh	No (1)	E	I	
19	VRS-TS-326	C - Safeguard Component Area Temperature	R/B	6	Other	1yr	Mild	Harsh	No (1)	E	I	
20	VRS-TS-327	C - Safeguard Component Area Temperature	R/B	6	Other	1yr	Mild	Harsh	No (1)	E	I	
21	VRS-TS-325	C - Safeguard Component Area Temperature	R/B	6	Other	1yr	Mild	Harsh	No (1)	E	I	
22	VRS-TS-336	D - Safeguard Component Area Temperature	R/B	6	Other	1yr	Mild	Harsh	No (1)	E	I	
23	VRS-TS-337	D - Safeguard Component Area Temperature	R/B	6	Other	1yr	Mild	Harsh	No (1)	E	I	
24	VRS-TS-335	D - Safeguard Component Area Temperature	R/B	6	Other	1yr	Mild	Harsh	No (1)	E	I	
25	VRS-TS-401	A - Emergency Feedwater Pump Area Temperature	R/B	8	Other	1yr	Mild	Harsh	No (1)	E	I	
26	VRS-TS-405	A - Emergency Feedwater Pump Area Temperature	R/B	8	Other	1yr	Mild	Harsh	No (1)	E	I	
27	VRS-TS-406	A - Emergency Feedwater Pump Area Temperature	R/B	8	Other	1yr	Mild	Harsh	No (1)	E	I	
28	VRS-TS-411	B - Emergency Feedwater Pump Area Temperature	R/B	8	Other	1yr	Mild	Harsh	No (1)	E	I	
29	VRS-TS-415	B - Emergency Feedwater Pump Area Temperature	R/B	8	Other	1yr	Mild	Harsh	No (1)	E	I	
30	VRS-TS-416	B - Emergency Feedwater Pump Area Temperature	R/B	8	Other	1yr	Mild	Harsh	No (1)	E	I	
31	VRS-TS-421	C - Emergency Feedwater Pump Area Temperature	R/B	8	Other	1yr	Mild	Harsh	No (1)	E	I	
32	VRS-TS-425	C - Emergency Feedwater Pump Area Temperature	R/B	8	Other	1yr	Mild	Harsh	No (1)	E	I	
33	VRS-TS-426	C - Emergency Feedwater Pump Area Temperature	R/B	8	Other	1yr	Mild	Harsh	No (1)	E	I	
34	VRS-TS-431	D - Emergency Feedwater Pump Area Temperature	R/B	8	Other	1yr	Mild	Harsh	No (1)	E	I	
35	VRS-TS-435	D - Emergency Feedwater Pump Area Temperature	R/B	8	Other	1yr	Mild	Harsh	No (1)	E	I	
36	VRS-TS-436	D - Emergency Feedwater Pump Area Temperature	R/B	8	Other	1yr	Mild	Harsh	No (1)	E	I	

Table 3D-2 US-APWR Environmental Qualification Equipment List (Sheet 18 of 65)

Item Num	Equipment Tag	Description	Location		Purpose	Operational Duration	Environmental Conditions	Radiation Condition	Influence of Submergence for Total Integrated Dose	Qualification Process	Seismic Category	Comments
			Building	Zone	RT, ESF, PAM, Pressure Boundary (PB), Other(1)		Harsh or Mild	Harsh or Mild	Yes/No	E=Electrical M=Mechanical	I, II, Non	
37	VRS-TS-501	A - Component Cooling Water Pump Area Temperature	R/B	8	Other	1yr	Mild	Harsh	No (1)	E	I	
38	VRS-TS-504	A - Component Cooling Water Pump Area Temperature	R/B	8	Other	1yr	Mild	Harsh	No (1)	E	I	
39	VRS-TS-505	A - Component Cooling Water Pump Area Temperature	R/B	8	Other	1yr	Mild	Harsh	No (1)	E	I	
40	VRS-TS-511	B - Component Cooling Water Pump Area Temperature	R/B	8	Other	1yr	Mild	Harsh	No (1)	E	I	
41	VRS-TS-514	B - Component Cooling Water Pump Area Temperature	R/B	8	Other	1yr	Mild	Harsh	No (1)	E	I	
42	VRS-TS-515	B - Component Cooling Water Pump Area Temperature	R/B	8	Other	1yr	Mild	Harsh	No (1)	E	I	
43	VRS-TS-521	C - Component Cooling Water Pump Area Temperature	R/B	8	Other	1yr	Mild	Harsh	No (1)	E	I	
44	VRS-TS-524	C - Component Cooling Water Pump Area Temperature	R/B	8	Other	1yr	Mild	Harsh	No (1)	E	I	
45	VRS-TS-525	C - Component Cooling Water Pump Area Temperature	R/B	8	Other	1yr	Mild	Harsh	No (1)	E	I	
46	VRS-TS-531	D - Component Cooling Water Pump Area Temperature	R/B	8	Other	1yr	Mild	Harsh	No (1)	E	I	
47	VRS-TS-534	D - Component Cooling Water Pump Area Temperature	R/B	8	Other	1yr	Mild	Harsh	No (1)	E	I	
48	VRS-TS-535	D - Component Cooling Water Pump Area Temperature	R/B	8	Other	1yr	Mild	Harsh	No (1)	E	I	
49	VRS-TS-541	A - Essential Chiller Unit Area Temperature	PS/B	9	Other	2wks	Mild	Mild	No (1)	E	I	(1)
50	VRS-TS-544	A - Essential Chiller Unit Area Temperature	PS/B	9	Other	2wks	Mild	Mild	No (1)	E	I	(1)
51	VRS-TS-545	A - Essential Chiller Unit Area Temperature	PS/B	9	Other	2wks	Mild	Mild	No (1)	E	I	(1)
52	VRS-TS-551	B - Essential Chiller Unit Area Temperature	PS/B	9	Other	2wks	Mild	Mild	No (1)	E	I	(1)
53	VRS-TS-554	B - Essential Chiller Unit Area Temperature	PS/B	9	Other	2wks	Mild	Mild	No (1)	E	I	(1)
54	VRS-TS-555	B - Essential Chiller Unit Area Temperature	PS/B	9	Other	2wks	Mild	Mild	No (1)	E	I	(1)
55	VRS-TS-561	C - Essential Chiller Unit Area Temperature	PS/B	9	Other	2wks	Mild	Mild	No (1)	E	I	(1)

Table 3D-2 US-APWR Environmental Qualification Equipment List (Sheet 19 of 65)

Item Num	Equipment Tag	Description	Location		Purpose	Operational Duration	Environmental Conditions	Radiation Condition	Influence of Submergence for Total Integrated Dose	Qualification Process	Seismic Category	Comments
			Building	Zone	RT, ESF, PAM, Pressure Boundary (PB), Other(1)		Harsh or Mild	Harsh or Mild	Yes/No	E=Electrical M=Mechanical	I, II, Non	
56	VRS-TS-564	C - Essential Chiller Unit Area Temperature	PS/B	9	Other	2wks	Mild	Mild	No (1)	E	I	(1)
57	VRS-TS-565	C - Essential Chiller Unit Area Temperature	PS/B	9	Other	2wks	Mild	Mild	No (1)	E	I	(1)
58	VRS-TS-571	D - Essential Chiller Unit Area Temperature	PS/B	9	Other	2wks	Mild	Mild	No (1)	E	I	(1)
59	VRS-TS-574	D - Essential Chiller Unit Area Temperature	PS/B	9	Other	2wks	Mild	Mild	No (1)	E	I	(1)
60	VRS-TS-575	D - Essential Chiller Unit Area Temperature	PS/B	9	Other	2wks	Mild	Mild	No (1)	E	I	(1)
61	VRS-TS-581	A - Charging Pump Area Temperature	R/B	7	Other	1yr	Mild	Harsh	No (1)	E	I	
62	VRS-TS-584	A - Charging Pump Area Temperature	R/B	7	Other	1yr	Mild	Harsh	No (1)	E	I	
63	VRS-TS-585	A - Charging Pump Area Temperature	R/B	7	Other	1yr	Mild	Harsh	No (1)	E	I	
64	VRS-TS-591	B - Charging Pump Area Temperature	R/B	7	Other	1yr	Mild	Harsh	No (1)	E	I	
65	VRS-TS-594	B - Charging Pump Area Temperature	R/B	7	Other	1yr	Mild	Harsh	No (1)	E	I	
66	VRS-TS-595	B - Charging Pump Area Temperature	R/B	7	Other	1yr	Mild	Harsh	No (1)	E	I	
67	VRS-TS-601	A - Annulus Emergency Exhaust Filtration Unit Area Temperature	R/B	7	Other	1yr	Mild	Harsh	No (1)	E	I	
68	VRS-TS-604	A - Annulus Emergency Exhaust Filtration Unit Area Temperature	R/B	7	Other	1yr	Mild	Harsh	No (1)	E	I	
69	VRS-TS-605	A - Annulus Emergency Exhaust Filtration Unit Area Temperature	R/B	7	Other	1yr	Mild	Harsh	No (1)	E	I	
70	VRS-TS-611	B - Annulus Emergency Exhaust Filtration Unit Area Temperature	R/B	7	Other	1yr	Mild	Harsh	No (1)	E	I	
71	VRS-TS-614	B - Annulus Emergency Exhaust Filtration Unit Area Temperature	R/B	7	Other	1yr	Mild	Harsh	No (1)	E	I	
72	VRS-TS-615	B - Annulus Emergency Exhaust Filtration Unit Area Temperature	R/B	7	Other	1yr	Mild	Harsh	No (1)	E	I	
73	VRS-TS-210	A - Class 1E Electrical Room Temperature	R/B	4	Other	2wks	Mild	Mild	No (1)	E	I	(1)
74	VRS-TS-230	B - Class 1E Electrical Room Temperature	R/B	4	Other	2wks	Mild	Mild	No (1)	E	I	(1)
75	VRS-TS-250	C - Class 1E Electrical Room Temperature	R/B	4	Other	2wks	Mild	Mild	No (1)	E	I	(1)
76	VRS-TS-270	D - Class 1E Electrical Room Temperature	R/B	4	Other	2wks	Mild	Mild	No (1)	E	I	(1)
77	VRS-TS-146	Main Control Room Temperature	R/B	2	Other	2wks	Mild	Mild	No (1)	E	I	(1)

Table 3D-2 US-APWR Environmental Qualification Equipment List (Sheet 20 of 65)

Item Num	Equipment Tag	Description	Location		Purpose	Operational Duration	Environmental Conditions	Radiation Condition	Influence of Submergence for Total Integrated Dose	Qualification Process	Seismic Category	Comments
			Building	Zone	RT, ESF, PAM, Pressure Boundary (PB), Other(1)		Harsh or Mild	Harsh or Mild	Yes/No	E=Electrical M=Mechanical	I, II, Non	
78	VRS-TS-156	Main Control Room Temperature	R/B	2	Other	2wks	Mild	Mild	No (1)	E	I	(1)
79	VRS-TS-166	Main Control Room Temperature	R/B	2	Other	2wks	Mild	Mild	No (1)	E	I	(1)
80	VRS-TS-176	Main Control Room Temperature	R/B	2	Other	2wks	Mild	Mild	No (1)	E	I	(1)
81	VRS-TS-661	A-Spent fuel pit pump area temperature	R/B	7	Other	1yr	Mild	Harsh	No (1)	E	I	
82	VRS-TS-664	A-Spent fuel pit pump area temperature	R/B	7	Other	1yr	Mild	Harsh	No (1)	E	I	
83	VRS-TS-665	A-Spent fuel pit pump area temperature	R/B	7	Other	1yr	Mild	Harsh	No (1)	E	I	
84	VRS-TS-671	B-Spent fuel pit pump area temperature	R/B	7	Other	1yr	Mild	Harsh	No (1)	E	I	
85	VRS-TS-674	B-Spent fuel pit pump area temperature	R/B	7	Other	1yr	Mild	Harsh	No (1)	E	I	
86	VRS-TS-675	B-Spent fuel pit pump area temperature	R/B	7	Other	1yr	Mild	Harsh	No (1)	E	I	
87	VRS-LS-147	A-Main Control Room Air Handling Unit Water Level	R/B	2	Other	2wks	Mild	Mild	No (1)	E	I	
88	VRS-LS-157	B-Main Control Room Air Handling Unit Water Level	R/B	2	Other	2wks	Mild	Mild	No (1)	E	I	
89	VRS-LS-167	C-Main Control Room Air Handling Unit Water Level	R/B	2	Other	2wks	Mild	Mild	No (1)	E	I	
90	VRS-LS-177	D-Main Control Room Air Handling Unit Water Level	R/B	2	Other	2wks	Mild	Mild	No (1)	E	I	
Cables												
1	N/A	Optical Cable	R/B	8	RT,ESF,PAM	1yr	Mild	Harsh	No (1)	E	I	
2	N/A	Instrumentation Cable (Harsh Specification)	PCCV, R/B	1-4 6	RT,ESF,PAM	1yr	Harsh	Harsh	No (1)	E	I	
3	N/A	Instrumentation Cable (Mild Specification)	R/B	7	RT,ESF,PAM	1yr	Mild	Harsh	No (1)	E	I	
4	N/A	Control Cable (Harsh Specification)	PCCV, R/B	1-4 6	ESF,PAM	1yr	Harsh	Harsh	No (1)	E	I	
5	N/A	Control Cable (Mild Specification)	R/B	7	RT,ESF,PAM	1yr	Mild	Harsh	No (1)	E	I	
6	N/A	Medium Voltage Power Cable (Harsh Specification)	R/B	6	ESF	30min	Harsh	Harsh	No (1)	E	I	
7	N/A	Medium Voltage Power Cable (Mild Specification)	R/B	7	ESF	30min	Mild	Harsh	No (1)	E	I	
8	N/A	Low Voltage Power Cable (Harsh Specification)	PCCV, R/B	1-4 6	ESF	30min	Harsh	Harsh	No (1)	E	I	

Table 3D-2 US-APWR Environmental Qualification Equipment List (Sheet 21 of 65)

Item Num	Equipment Tag	Description	Location		Purpose	Operational Duration	Environmental Conditions	Radiation Condition	Influence of Submergence for Total Integrated Dose	Qualification Process	Seismic Category	Comments
			Building	Zone	RT, ESF, PAM, Pressure Boundary (PB), Other(1)		Harsh or Mild	Harsh or Mild	Yes/No	E=Electrical M=Mechanical	I, II, Non	
9	N/A	Low Voltage Power Cable (Mild Specification)	R/B	7	ESF	30min	Mild	Harsh	No (1)	E	I	
10	N/A	Other Specific Cables	PCCV, R/B	1-4 6	RT,ESF,PAM	1yr	Harsh	Harsh	No (1)	E	I	
11	N/A	Other Specific Cables	R/B	7	RT,ESF,PAM	1yr	Mild	Harsh	No (1)	E	I	
Electrical Component												
1	A-EGTG	A-Class 1E Gas Turbine Generator	PS/B	11	ESF	2wks	Mild	Mild	No (1)	E	I	
2	B-EGTG	B-Class 1E Gas Turbine Generator	PS/B	11	ESF	2wks	Mild	Mild	No (1)	E	I	
3	C-EGTG	C-Class 1E Gas Turbine Generator	PS/B	11	ESF	2wks	Mild	Mild	No (1)	E	I	
4	D-EGTG	D-Class 1E Gas Turbine Generator	PS/B	11	ESF	2wks	Mild	Mild	No (1)	E	I	
5	GTS-MFN-201A	A-Emergency Gas Turbine Lubrication System Oil Cooler Fan	PS/B	11	ESF	2wks	Mild	Mild	No (1)	M	I	
6	GTS-MFN-202A	A-Emergency Gas Turbine Lubrication System Oil Cooler Fan	PS/B	11	ESF	2wks	Mild	Mild	No (1)	M	I	
7	GTS-MFN-201B	B-Emergency Gas Turbine Lubrication System Oil Cooler Fan	PS/B	11	ESF	2wks	Mild	Mild	No (1)	M	I	
8	GTS-MFN-202B	B-Emergency Gas Turbine Lubrication System Oil Cooler Fan	PS/B	11	ESF	2wks	Mild	Mild	No (1)	M	I	
9	GTS-MFN-201C	C-Emergency Gas Turbine Lubrication System Oil Cooler Fan	PS/B	11	ESF	2wks	Mild	Mild	No (1)	M	I	
10	GTS-MFN-202C	C-Emergency Gas Turbine Lubrication System Oil Cooler Fan	PS/B	11	ESF	2wks	Mild	Mild	No (1)	M	I	
11	GTS-MFN-201D	D-Emergency Gas Turbine Lubrication System Oil Cooler Fan	PS/B	11	ESF	2wks	Mild	Mild	No (1)	M	I	
12	GTS-MFN-202D	D-Emergency Gas Turbine Lubrication System Oil Cooler Fan	PS/B	11	ESF	2wks	Mild	Mild	No (1)	M	I	
13	GTS-MPP-001A	A-Emergency Gas Turbine Fuel Oil Transfer Pump	PSFSV	11	ESF	2wks	Mild	Mild	No (1)	M	I	
14	GTS-MPP-002A	A-Emergency Gas Turbine Fuel Oil Transfer Pump	PSFSV	11	ESF	2wks	Mild	Mild	No (1)	M	I	
15	GTS-MPP-001B	B-Emergency Gas Turbine Fuel Oil Transfer Pump	PSFSV	11	ESF	2wks	Mild	Mild	No (1)	M	I	
16	GTS-MPP-002B	B-Emergency Gas Turbine Fuel Oil Transfer Pump	PSFSV	11	ESF	2wks	Mild	Mild	No (1)	M	I	

Table 3D-2 US-APWR Environmental Qualification Equipment List (Sheet 22 of 65)

Item Num	Equipment Tag	Description	Location		Purpose	Operational Duration	Environmental Conditions	Radiation Condition	Influence of Submergence for Total Integrated Dose	Qualification Process	Seismic Category	Comments
			Building	Zone	RT, ESF, PAM, Pressure Boundary (PB), Other(1)		Harsh or Mild	Harsh or Mild	Yes/No	E=Electrical M=Mechanical	I, II, Non	
17	GTS-MPP-001C	C-Emergency Gas Turbine Fuel Oil Transfer Pump	PSFSV	11	ESF	2wks	Mild	Mild	No (1)	M	I	
18	GTS-MPP-002C	C-Emergency Gas Turbine Fuel Oil Transfer Pump	PSFSV	11	ESF	2wks	Mild	Mild	No (1)	M	I	
19	GTS-MPP-001D	D-Emergency Gas Turbine Fuel Oil Transfer Pump	PSFSV	11	ESF	2wks	Mild	Mild	No (1)	M	I	
20	GTS-MPP-002D	D-Emergency Gas Turbine Fuel Oil Transfer Pump	PSFSV	11	ESF	2wks	Mild	Mild	No (1)	M	I	
21	GTS-MFN-302A	A-Ventilation Exhaust Fan	PS/B	11	ESF	2wks	Mild	Mild	No (1)	M	I	
22	GTS-MFN-302B	B-Ventilation Exhaust Fan	PS/B	11	ESF	2wks	Mild	Mild	No (1)	M	I	
23	GTS-MFN-302C	C-Ventilation Exhaust Fan	PS/B	11	ESF	2wks	Mild	Mild	No (1)	M	I	
24	GTS-MFN-302D	D-Ventilation Exhaust Fan	PS/B	11	ESF	2wks	Mild	Mild	No (1)	M	I	
25	GTS-SOV-109A	Air Start Solenoid Valves in Starting Air Valve Unit	PS/B	11	ESF	2wks	Mild	Mild	No (1)	M	I	
26	GTS-SOV-110A	Air Start Solenoid Valves in Starting Air Valve Unit	PS/B	11	ESF	2wks	Mild	Mild	No (1)	M	I	
27	GTS-SOV-109B	Air Start Solenoid Valves in Starting Air Valve Unit	PS/B	11	ESF	2wks	Mild	Mild	No (1)	M	I	
28	GTS-SOV-110B	Air Start Solenoid Valves in Starting Air Valve Unit	PS/B	11	ESF	2wks	Mild	Mild	No (1)	M	I	
29	GTS-SOV-109C	Air Start Solenoid Valves in Starting Air Valve Unit	PS/B	11	ESF	2wks	Mild	Mild	No (1)	M	I	
30	GTS-SOV-110C	Air Start Solenoid Valves in Starting Air Valve Unit	PS/B	11	ESF	2wks	Mild	Mild	No (1)	M	I	
31	GTS-SOV-109D	Air Start Solenoid Valves in Starting Air Valve Unit	PS/B	11	ESF	2wks	Mild	Mild	No (1)	M	I	
32	GTS-SOV-110D	Air Start Solenoid Valves in Starting Air Valve Unit	PS/B	11	ESF	2wks	Mild	Mild	No (1)	M	I	
33	Deleted											
34	Deleted											
35	Deleted											
36	Deleted											
37	Deleted											
38	Deleted											
39	Deleted											
40	Deleted											

Table 3D-2 US-APWR Environmental Qualification Equipment List (Sheet 23 of 65)

Item Num	Equipment Tag	Description	Location		Purpose	Operational Duration	Environmental Conditions	Radiation Condition	Influence of Submergence for Total Integrated Dose	Qualification Process	Seismic Category	Comments
			Building	Zone	RT, ESF, PAM, Pressure Boundary (PB), Other(1)		Harsh or Mild	Harsh or Mild	Yes/No	E=Electrical M=Mechanical	I, II, Non	
41	GTS-LT-005	Level Transmitter of the Fuel Oil Day Tank	PS/B	11	ESF	2wks	Mild	Mild	No (1)	E	I	
42	GTS-LT-006	Level Transmitter of the Fuel Oil Day Tank	PS/B	11	ESF	2wks	Mild	Mild	No (1)	E	I	
43	GTS-LT-007	Level Transmitter of the Fuel Oil Day Tank	PS/B	11	ESF	2wks	Mild	Mild	No (1)	E	I	
44	GTS-LT-008	Level Transmitter of the Fuel Oil Day Tank	PS/B	11	ESF	2wks	Mild	Mild	No (1)	E	I	
45		Containment Electrical Penetration	PCCV	1-5	RT, ESF, PAM, PB	1yr	Harsh	Harsh	No (1)	E, M	I	
46		Raceway(Tray, Conduit)	PCCV, R/B, PS/B	1-4 6 7	RT, ESF, PAM	1yr	Harsh/Mild	Harsh	No (1)	M	I	
Electrical Cabinet												
1	OC	Operator Console	R/B	2	RT, ESF, PAM	2wks	Mild	Mild	No (1)	E	I	
2	RPS-A	A-Reactor Protection System Cabinet	R/B	3	RT, ESF, PAM	2wks	Mild	Mild	No (1)	E	I	
3	EFS-A	A-ESF Actuation System Cabinet	R/B	3	ESF	2wks	Mild	Mild	No (1)	E	I	
4	SVP-A	A-Safety VDU Processor Cabinet	R/B	3	RT, ESF, PAM	2wks	Mild	Mild	No (1)	E	I	
5	SLS-A	A-Safety Logic System Cabinet	R/B	3	ESF, PAM	2wks	Mild	Mild	No (1)	E	I	
6	RPS-B	B-Reactor Protection System Cabinet	R/B	3	RT, ESF, PAM	2wks	Mild	Mild	No (1)	E	I	
7	EFS-B	B-ESF Actuation System Cabinet	R/B	3	ESF	2wks	Mild	Mild	No (1)	E	I	
8	SVP-B	B-Safety VDU Processor Cabinet	R/B	3	RT, ESF, PAM	2wks	Mild	Mild	No (1)	E	I	
9	SLS-B	B-Safety Logic System Cabinet	R/B	3	ESF, PAM	2wks	Mild	Mild	No (1)	E	I	
10	RPS-C	C-Reactor Protection System Cabinet	R/B	3	RT, ESF, PAM	2wks	Mild	Mild	No (1)	E	I	
11	EFS-C	C-ESF Actuation System Cabinet	R/B	3	ESF	2wks	Mild	Mild	No (1)	E	I	
12	SVP-C	C-Safety VDU Processor Cabinet	R/B	3	RT, ESF, PAM	2wks	Mild	Mild	No (1)	E	I	
13	SLS-C	C-Safety Logic System Cabinet	R/B	3	ESF, PAM	2wks	Mild	Mild	No (1)	E	I	
14	RPS-D	D-Reactor Protection System Cabinet	R/B	3	RT, ESF, PAM	2wks	Mild	Mild	No (1)	E	I	
15	EFS-D	D-ESF Actuation System Cabinet	R/B	3	ESF	2wks	Mild	Mild	No (1)	E	I	
16	SVP-D	D-Safety VDU Processor Cabinet	R/B	3	RT, ESF, PAM	2wks	Mild	Mild	No (1)	E	I	

Table 3D-2 US-APWR Environmental Qualification Equipment List (Sheet 24 of 65)

Item Num	Equipment Tag	Description	Location		Purpose	Operational Duration	Environmental Conditions	Radiation Condition	Influence of Submergence for Total Integrated Dose	Qualification Process	Seismic Category	Comments
			Building	Zone	RT, ESF, PAM, Pressure Boundary (PB), Other(1)		Harsh or Mild	Harsh or Mild	Yes/No	E=Electrical M=Mechanical	I, II, Non	
17	SLS-D	D-Safety Logic System Cabinet	R/B	3	ESF, PAM	2wks	Mild	Mild	No (1)	E	I	
18	MC-A	A-Class 1E 6.9kV Switchgear	R/B	4	ESF	2wks	Mild	Mild	No (1)	E	I	
19	LC-A	A-Class 1E 480V Load Center	R/B	4	ESF	2wks	Mild	Mild	No (1)	E	I	
20	MCC-A	A-Class 1E Motor Control Center	R/B	4	ESF	2wks	Mild	Mild	No (1)	E	I	
21	MCC-A1	A1-Class 1E Motor Control Center	R/B	4	ESF	2wks	Mild	Mild	No (1)	E	I	
22	RIO-A	A-Safety Remote I/O Cabinet	R/B	4	ESF, PAM	2wks	Mild	Mild	No (1)	E	I	
23	PBH-A	A-Pressurizer Heater Distribution Panel	R/B	4	ESF	2wks	Mild	Mild	No (1)	E	I	
24	RPTS-A	A-RCP Trip Switchgear	R/B	4	Other	2wks	Mild	Mild	No (1)	E	I	
25	MC-B	B-Class 1E 6.9kV Switchgear	R/B	4	ESF	2wks	Mild	Mild	No (1)	E	I	
26	LC-B	B-Class 1E 480V Load Center	R/B	4	ESF	2wks	Mild	Mild	No (1)	E	I	
27	MCC-B	B-Class 1E Motor Control Center	R/B	4	ESF	2wks	Mild	Mild	No (1)	E	I	
28	RIO-B	B-Safety Remote I/O Cabinet	R/B	3	ESF, PAM	2wks	Mild	Mild	No (1)	E	I	
29	PBH-B	B-Pressurizer Heater Distribution Panel	R/B	4	ESF	2wks	Mild	Mild	No (1)	E	I	
30	RPTS-B	B-RCP Trip Switchgear	R/B	4	Other	2wks	Mild	Mild	No (1)	E	I	
31	MC-C	C-Class 1E 6.9kV Switchgear	R/B	4	ESF	2wks	Mild	Mild	No (1)	E	I	
32	LC-C	C-Class 1E 480V Load Center	R/B	4	ESF	2wks	Mild	Mild	No (1)	E	I	
33	MCC-C	C-Class 1E Motor Control Center	R/B	4	ESF	2wks	Mild	Mild	No (1)	E	I	
34	RIO-C	C-Safety Remote I/O Cabinet	R/B	3	ESF, PAM	2wks	Mild	Mild	No (1)	E	I	
35	PBH-C	C-Pressurizer Heater Distribution Panel	R/B	4	ESF	2wks	Mild	Mild	No (1)	E	I	
36	RPTS-C	C-RCP Trip Switchgear	R/B	4	Other	2wks	Mild	Mild	No (1)	E	I	
37	MC-D	D-Class 1E 6.9kV Switchgear	R/B	4	ESF	2wks	Mild	Mild	No (1)	E	I	
38	LC-D	D-Class 1E 480V Load Center	R/B	4	ESF	2wks	Mild	Mild	No (1)	E	I	
39	MCC-D	D-Class 1E Motor Control Center	R/B	4	ESF	2wks	Mild	Mild	No (1)	E	I	
40	MCC-D1	D1-Class 1E Motor Control Center	R/B	4	ESF	2wks	Mild	Mild	No (1)	E	I	
41	RIO-D	D-Safety Remote I/O Cabinet	R/B	4	ESF, PAM	2wks	Mild	Mild	No (1)	E	I	

Table 3D-2 US-APWR Environmental Qualification Equipment List (Sheet 25 of 65)

Item Num	Equipment Tag	Description	Location		Purpose	Operational Duration	Environmental Conditions	Radiation Condition	Influence of Submergence for Total Integrated Dose	Qualification Process	Seismic Category	Comments
			Building	Zone	RT, ESF, PAM, Pressure Boundary (PB), Other(1)		Harsh or Mild	Harsh or Mild	Yes/No	E=Electrical M=Mechanical	I, II, Non	
42	PBH-D	D-Pressurizer Heater Distribution Panel	R/B	4	ESF	2wks	Mild	Mild	No (1)	E	I	
43	RPTS-D	D-RCP Trip Switchgear	R/B	4	Other	2wks	Mild	Mild	No (1)	E	I	
44	RSC	Remote Shutdown Console	R/B	2	RT, ESF, PAM	2wks	Mild	Mild	No (1)	E	I	
45	MRTP-1	MCR/RSR Transfer Panel (1)	R/B	14	RT, ESF, PAM	2wks	Mild	Mild	No (1)	E	I	
46	MRTP-2	MCR/RSR Transfer Panel (2)	R/B	2	RT, ESF, PAM	2wks	Mild	Mild	No (1)	E	I	
47	RTBC-1	Reactor Trip Breaker Cabinet (1)	R/B	4	RT	5min	Mild	Mild	No (1)	E	I	
48	RTBC-2	Reactor Trip Breaker Cabinet (2)	R/B	4	RT	5min	Mild	Mild	No (1)	E	I	
49	BCP-A	A-Class 1E Battery Charger	PS/B	4	RT, ESF	2wks	Mild	Mild	No (1)	E	I	
50A	DCC-A	A-Class 1E DC Switchboard	PS/B	4	RT, ESF	2wks	Mild	Mild	No (1)	E	I	
50B	DCC-A1	A1-Class 1E DC Switchboard	PS/B	4	RT, ESF	2wks	Mild	Mild	No (1)	E	I	
51	DDP-A	A-Reactor Building DC Distribution Panel	R/B	4	RT, ESF	2wks	Mild	Mild	No (1)	E	I	
52	SDC-A	A-Solenoid Distribution Panel	R/B	4	ESF	2wks	Mild	Mild	No (1)	E	I	
53	IBC-A	A-Class 1E UPS Unit	R/B	4	RT, ESF, PAM	2wks	Mild	Mild	No (1)	E	I	
54	Deleted											
55	IBD-A	A-Class 1E AC120V Panelboard	R/B	4	RT, ESF, PAM	2wks	Mild	Mild	No (1)	E	I	
56	IBD-A1	A1-Class 1E AC 120V Panelboard	R/B	4	RT, ESF, PAM	2wks	Mild	MIld	No (1)	E	I	
57	IBD-A2	A2-Class 1E AC 120V Panelboard	R/B	4	RT, ESF, PAM	2wks	Mild	Mild	No (1)	E	I	
58	MVIA1	A-MOV Inverter1	PS/B	4	ESF, PB	2wks	Mild	Mild	No (1)	E	I	
59	MVIA2	A-MOV Inverter2	PS/B	4	ESF, PB	2wks	Mild	Mild	No (1)	E	I	
60	MVCA1	A-MOV Motor Control Center1	PS/B	4	ESF, PB	2wks	Mild	Mild	No (1)	E	I	
61	MVCA2	A-MOV Motor Control Center2	PS/B	4	ESF, PB	2wks	Mild	Mild	No (1)	E	I	
62	BCP-B	B-Class 1E Battery Charger	PS/B	4	RT, ESF	2wks	Mild	Mild	No (1)	E	I	
63	DCC-B	B-Class 1E DC Switchboard	PS/B	4	RT, ESF	2wks	Mild	Mild	No (1)	E	I	
64	DDP-B	B-Reactor Building DC Distribution Panel	R/B	4	RT, ESF	2wks	Mild	Mild	No (1)	E	I	
65	SDC-B	B-Solenoid Distribution Panel	R/B	4	ESF	2wks	Mild	Mild	No (1)	E	I	

Table 3D-2 US-APWR Environmental Qualification Equipment List (Sheet 26 of 65)

Item Num	Equipment Tag	Description	Location		Purpose	Operational Duration	Environmental Conditions	Radiation Condition	Influence of Submergence for Total Integrated Dose	Qualification Process	Seismic Category	Comments
			Building	Zone	RT, ESF, PAM, Pressure Boundary (PB), Other(1)		Harsh or Mild	Harsh or Mild	Yes/No	E=Electrical M=Mechanical	I, II, Non	
66	IBC-B	B-Class 1E UPS Unit	R/B	4	RT, ESF, PAM	2wks	Mild	Mild	No (1)	E	I	
67	Deleted											
68	IBD-B	B-Class 1E AC120V Panelboard	R/B	4	RT, ESF, PAM	2wks	Mild	Mild	No (1)	E	I	
69	IBD-B1	B1-Class 1E AC 120V Panelboard	R/B	4	RT, ESF, PAM	2wks	Mild	Mild	No (1)	E	I	
70	IBD-B2	B2-Class 1E AC 120V Panelboard	R/B	4	RT, ESF, PAM	2wks	Mild	Mild	No (1)	E	I	
71	MVIB	B-MOV Inverter	PS/B	4	ESF, PB	2wks	Mild	Mild	No (1)	E	I	
72	MVCB	B-MOV Motor Control Center	PS/B	4	ESF, PB	2wks	Mild	Mild	No (1)	E	I	
73	BCP-C	C-Class 1E Battery Charger	PS/B	4	RT, ESF	2wks	Mild	Mild	No (1)	E	I	
74	DCC-C	C-Class 1E DC Switchboard	PS/B	4	RT, ESF	2wks	Mild	Mild	No (1)	E	I	
75	DDP-C	C-Reactor Building DC Distribution Panel	R/B	4	RT, ESF	2wks	Mild	Mild	No (1)	E	I	
76	SDC-C	C-Solenoid Distribution Panel	R/B	4	ESF	2wks	Mild	Mild	No (1)	E	I	
77	IBC-C	C-Class 1E UPS Unit	R/B	4	RT, ESF, PAM	2wks	Mild	Mild	No (1)	E	I	
78	Deleted											
79	IBD-C	C-Class 1E AC120V Panelboard	R/B	4	RT, ESF, PAM	2wks	Mild	Mild	No (1)	E	I	
80	IBD-C1	C1-Class 1E AC 120V Panelboard	R/B	4	RT, ESF, PAM	2wks	Mild	Mild	No (1)	E	I	
81	IBD-C2	C2-Class 1E AC 120V Panelboard	R/B	4	RT, ESF, PAM	2wks	Mild	Mild	No (1)	E	I	
82	MVIC	C-MOV Inverter	PS/B	4	ESF, PB	2wks	Mild	Mild	No (1)	E	I	
83	MVCC	C-MOV Motor Control Center	PS/B	4	ESF, PB	2wks	Mild	Mild	No (1)	E	I	
84	BCP-D	D-Class 1E Battery Charger	PS/B	4	RT, ESF	2wks	Mild	Mild	No (1)	E	I	
85A	DCC-D	D-Class 1E DC Switchboard	PS/B	4	RT, ESF	2wks	Mild	Mild	No (1)	E	I	
85B	DCC-D1	D1-Class 1E DC Switchboard	PS/B	4	RT, ESF	2wks	Mild	Mild	No (1)	E	I	
86	DDP-D	D-Reactor Building DC Distribution Panel	R/B	4	RT, ESF	2wks	Mild	Mild	No (1)	E	I	
87	SDC-D	D-Solenoid Distribution Panel	R/B	4	ESF	2wks	Mild	Mild	No (1)	E	I	
88	IBC-D	D-Class 1E UPS Unit	R/B	4	RT, ESF, PAM	2wks	Mild	Mild	No (1)	E	I	
89	Deleted											

Table 3D-2 US-APWR Environmental Qualification Equipment List (Sheet 27 of 65)

Item Num	Equipment Tag	Description	Location		Purpose	Operational Duration	Environmental Conditions	Radiation Condition	Influence of Submergence for Total Integrated Dose	Qualification Process	Seismic Category	Comments
			Building	Zone	RT, ESF, PAM, Pressure Boundary (PB), Other(1)		Harsh or Mild	Harsh or Mild	Yes/No	E=Electrical M=Mechanical	I, II, Non	
90	IBD-D	D-Class 1E AC120V Panelboard	R/B	4	RT, ESF, PAM	2wks	Mild	Mild	No (1)	E	I	
91	IBD-D1	D1-Class 1E AC 120V Panelboard	R/B	4	RT, ESF, PAM	2wks	Mild	Mild	No (1)	E	I	
92	IBD-D2	D2-Class 1E AC 120V Panelboard	R/B	4	RT, ESF, PAM	2wks	Mild	Mild	No (1)	E	I	
93	MVID1	D-MOV Inverter1	PS/B	4	ESF, PB	2wks	Mild	Mild	No (1)	E	I	
94	MVID2	D-MOV Inverter2	PS/B	4	ESF, PB	2wks	Mild	Mild	No (1)	E	I	
95	MVCD1	D-MOV Motor Control Center1	PS/B	4	ESF, PB	2wks	Mild	Mild	No (1)	E	I	
96	MVCD2	D-MOV Motor Control Center2	PS/B	4	ESF, PB	2wks	Mild	Mild	No (1)	E	I	
97	VCC-A	A-Ventilation Chiller Control Cabinet	PS/B	9	ESF	2wks	Mild	Mild	No (1)	E	I	
98	VCC-B	B-Ventilation Chiller Control Cabinet	PS/B	9	ESF	2wks	Mild	Mild	No (1)	E	I	
99	VCC-C	C-Ventilation Chiller Control Cabinet	PS/B	9	ESF	2wks	Mild	Mild	No (1)	E	I	
100	VCC-D	D-Ventilation Chiller Control Cabinet	PS/B	9	ESF	2wks	Mild	Mild	No (1)	E	I	
101	BAT-A	A-Class 1E Battery	PS/B	5	RT, ESF	2hr	Mild	Mild	No (1)	E	I	
102	BAT-B	B-Class 1E Battery	PS/B	5	RT, ESF	2hr	Mild	Mild	No (1)	E	I	
103	BAT-C	C-Class 1E Battery	PS/B	5	RT, ESF	2hr	Mild	Mild	No (1)	E	I	
104	BAT-D	D-Class 1E Battery	PS/B	5	RT, ESF	2hr	Mild	Mild	No (1)	E	I	
105	EPBA	A-Class 1E Gas Turbine Generator Control Board	PS/B	11	ESF	2wks	Mild	Mild	No (1)	E	I	
106	EPBB	B-Class 1E Gas Turbine Generator Control Board	PS/B	11	ESF	2wks	Mild	Mild	No (1)	E	I	
107	EPBC	C-Class 1E Gas Turbine Generator Control Board	PS/B	11	ESF	2wks	Mild	Mild	No (1)	E	I	
108	EPBD	D-Class 1E Gas Turbine Generator Control Board	PS/B	11	ESF	2wks	Mild	Mild	No (1)	E	I	
109	TTSD-A	A-Turbine Trip Solenoid Distribution Panel	R/B	4	Other	2wks	Mild	Mild	No (1)	E	I	
110	TTSD-D	D-Turbine Trip Solenoid Distribution Panel	R/B	4	Other	2wks	Mild	Mild	No (1)	E	I	
111	SRPP-A	Source Range Neutron Flux Preamplifier Panel (Train A)	R/B	6	RT, Other	36hr	Mild	Harsh	No (1)	E	I	
112	SRPP-D	Source Range Neutron Flux Preamplifier Panel (Train D)	R/B	6	RT, Other	36hr	Mild	Harsh	No (1)	E	I	

Table 3D-2 US-APWR Environmental Qualification Equipment List (Sheet 28 of 65)

Item Num	Equipment Tag	Description	Location		Purpose	Operational Duration	Environmental Conditions	Radiation Condition	Influence of Submergence for Total Integrated Dose	Qualification Process	Seismic Category	Comments
			Building	Zone	RT, ESF, PAM, Pressure Boundary (PB), Other(1)		Harsh or Mild	Harsh or Mild	Yes/No	E=Electrical M=Mechanical	I, II, Non	
113	WRPP-A	Wide Range Neutron Flux Preamplifier Panel (Train A)	R/B	6	PAM	4mos	Mild	Harsh	No (1)	E	I	
114	WRPP-D	Wide Range Neutron Flux Preamplifier Panel (Train D)	R/B	6	PAM	4mos	Mild	Harsh	No (1)	E	I	
Equipment (Reactor Coolant System)												
1	Deleted											
2	Deleted											
3	Deleted											
4	Deleted											
5	Deleted											
6	Deleted											
7	RCS-MPP-001A	A-Reactor Coolant Pump	PCCV	1-4	PB	1yr	Harsh	Harsh	No (1)	M	I	
8	RCS-MPP-001B	B-Reactor Coolant Pump	PCCV	1-4	PB	1yr	Harsh	Harsh	No (1)	M	I	
9	RCS-MPP-001C	C-Reactor Coolant Pump	PCCV	1-4	PB	1yr	Harsh	Harsh	No (1)	M	I	
10	RCS-MPP-001D	D-Reactor Coolant Pump	PCCV	1-4	PB	1yr	Harsh	Harsh	No (1)	M	I	
11	Deleted											
12	Deleted											
13	Deleted											
14	Deleted											
15	RCS-MOV-002A	Motor Operated Valve	PCCV	1-6	ESF	1yr	Harsh	Harsh	No (1)	M	I	
16	RCS-MOV-002B	Motor Operated Valve	PCCV	1-6	ESF	1yr	Harsh	Harsh	No (1)	M	I	
17	RCS-MOV-003A	Motor Operated Valve	PCCV	1-6	ESF	1yr	Harsh	Harsh	No (1)	M	I	
18	RCS-MOV-003B	Motor Operated Valve	PCCV	1-6	ESF	1yr	Harsh	Harsh	No (1)	M	I	
19	RCS-MOV-111A	Motor Operated Valve	PCCV	1-5	ESF	1yr	Harsh	Harsh	No (1)	M	I	
20	RCS-MOV-111B	Motor Operated Valve	PCCV	1-5	ESF	1yr	Harsh	Harsh	No (1)	M	I	
21	RCS-MOV-116A	Motor Operated Valve	PCCV	1-4	ESF	1yr	Harsh	Harsh	No (1)	M	I	

Table 3D-2 US-APWR Environmental Qualification Equipment List (Sheet 29 of 65)

Item Num	Equipment Tag	Description	Location		Purpose	Operational Duration	Environmental Conditions	Radiation Condition	Influence of Submergence for Total Integrated Dose	Qualification Process	Seismic Category	Comments
			Building	Zone	RT, ESF, PAM, Pressure Boundary (PB), Other(1)		Harsh or Mild	Harsh or Mild	Yes/No	E=Electrical M=Mechanical	I, II, Non	
22	RCS-MOV-116B	Motor Operated Valve	PCCV	1-4	ESF	1yr	Harsh	Harsh	No (1)	M	I	
23	RCS-MOV-117A	A-Safety Depressurization Valve	PCCV	1-4	ESF	1yr	Harsh	Harsh	No (1)	M	I	
24	RCS-MOV-117B	B-Safety Depressurization Valve	PCCV	1-4	ESF	1yr	Harsh	Harsh	No (1)	M	I	
25	RCS-MOV-118	Motor Operated Valve	PCCV	1-4	ESF	1yr	Harsh	Harsh	No (1)	M	I	
26	RCS-MOV-119	Depressurization Valve	PCCV	1-4	ESF	1yr	Harsh	Harsh	No (1)	M	I	
27	RCS-AOV-132	Air Operated Valve	R/B	6	ESF	5min	Mild	Harsh	No (1)	M	I	
28	RCS-PCV-061A	A-Pressurizer Spray Valve	PCCV	1-5	PB	1yr	Harsh	Harsh	No (1)	M	I	
29	RCS-PCV-061B	B-Pressurizer Spray Valve	PCCV	1-5	PB	1yr	Harsh	Harsh	No (1)	M	I	
30	RCS-AOV-147	Air Operated Valve	PCCV	1-5	ESF	5min	Harsh	Harsh	No (1)	M	I	
31	RCS-AOV-148	Air Operated Valve	R/B	6	ESF	5min	Mild	Harsh	No (1)	M	I	
32	RCS-AOV-138	Air Operated Valve	R/B	6	ESF	5min	Mild	Harsh	No (1)	M	I	
Equipment (Chemical and Volume Control System)												
1	CVS-MPP-001A	A-Charging Pump	R/B	7	ESF	2wks	Mild	Harsh	No (2)	M	I	
2	CVS-MPP-001B	B-Charging Pump	R/B	7	ESF	2wks	Mild	Harsh	No (2)	M	I	
3	CVS-MOV-151	Motor Operated Valve	R/B	7	ESF	5min	Mild	Harsh	No (1)	M	I	
4	CVS-MOV-152	Motor Operated Valve	R/B	7	ESF	5min	Mild	Harsh	No (1)	M	I	
5	CVS-MOV-203	Motor Operated Valve	PCCV	1-5	ESF	5min	Harsh	Harsh	No (1)	M	I	
6	CVS-MOV-204	Motor Operated Valve	R/B	6	ESF	5min	Mild	Harsh	No (1)	M	I	
7	CVS-MOV-178A	Motor Operated Valve	R/B	7	ESF	1yr	Mild	Harsh	No (1)	M	I	
8	CVS-MOV-178B	Motor Operated Valve	R/B	7	ESF	1yr	Mild	Harsh	No (1)	M	I	
9	CVS-AOV-005	Air Operated Valve	PCCV	1-5	ESF	1yr	Harsh	Harsh	No (1)	M	I	
10	CVS-AOV-006	Air Operated Valve	R/B	7	ESF	1yr	Mild	Harsh	No (1)	M	I	
11	CVS-AOV-146	Air Operated Valve	R/B	7	PB	1yr	Mild	Harsh	No (1)	M	I	
12	CVS-AOV-155	Air Operated Valve	PCCV	1-4	PB	1yr	Harsh	Harsh	No (1)	M	I	
13	CVS-AOV-159	Air Operated Valve	PCCV	1-4	PB	1yr	Harsh	Harsh	No (1)	M	I	

Table 3D-2 US-APWR Environmental Qualification Equipment List (Sheet 30 of 65)

Item Num	Equipment Tag	Description	Location		Purpose	Operational Duration	Environmental Conditions	Radiation Condition	Influence of Submergence for Total Integrated Dose	Qualification Process	Seismic Category	Comments
			Building	Zone	RT, ESF, PAM, Pressure Boundary (PB), Other(1)		Harsh or Mild	Harsh or Mild	Yes/No	E=Electrical M=Mechanical	I, II, Non	
14	CVS-LCV-361	Level Control Valve	PCCV	1-4	PB	1yr	Harsh	Harsh	No (1)	M	I	
15	CVS-LCV-362	Level Control Valve	PCCV	1-4	PB	1yr	Harsh	Harsh	No (1)	M	I	
16	CVS-AOV-192A	Air Operated Valve	PCCV	1-4	PB	1yr	Harsh	Harsh	No (1)	M	I	
17	CVS-AOV-192B	Air Operated Valve	PCCV	1-4	PB	1yr	Harsh	Harsh	No (1)	M	I	
18	CVS-AOV-221	Air Operated Valve	PCCV	1-4	PB	1yr	Harsh	Harsh	No (1)	M	I	
19	CVS-AOV-222	Air Operated Valve	PCCV	1-4	PB	1yr	Harsh	Harsh	No (1)	M	I	
20	CVS-MOV-178C	Motor Operated Valve	R/B	7	ESF	1yr	Mild	Harsh	No (1)	M	I	
21	CVS-MOV-178D	Motor Operated Valve	R/B	7	ESF	1yr	Mild	Harsh	No (1)	M	I	
22	CVS-AOV-192C	Air Operated Valve	PCCV	1-4	PB	1yr	Harsh	Harsh	No (1)	M	I	
23	CVS-AOV-192D	Air Operated Valve	PCCV	1-4	PB	1yr	Harsh	Harsh	No (1)	M	I	
24	CVS-LCV-031B	Level Control Valve	R/B	7	Other	2wks	Mild	Harsh	No (1)	M	I	
25	CVS-LCV-031C	Level Control Valve	R/B	7	Other	2wks	Mild	Harsh	No (1)	M	I	
26	CVS-LCV-031D	Level Control Valve	R/B	7	Other	2wks	Mild	Harsh	No (1)	M	I	
27	CVS-LCV-031E	Level Control Valve	R/B	7	Other	2wks	Mild	Harsh	No (1)	M	I	
28	CVS-AOV-165	Air Operated Valve	R/B	7	Other	2wks	Mild	Harsh	No (1)	M	I	
29	CVS-FCV-048	Flow Control Valve	R/B	7	PB	2wks	Mild	Harsh	No (1)	M	I	
30	CVS-FCV-050	Flow Control Valve	R/B	7	Other	2wks	Mild	Harsh	No (1)	M	I	
31	CVS-FCV-128	Flow Control Valve	R/B	13-3	Other	2wks	Mild	Mild	No (1)	M	I	
32	CVS-FCV-129	Flow Control Valve	R/B	13-3	Other	2wks	Mild	Mild	No (1)	M	I	
33	Deleted											
34	Deleted											
35	CVS-AOV-001A	Air Operated Valve	PCCV	1-4	PB	1yr	Harsh	Harsh	No (1)	M	I	
36	CVS-AOV-001B	Air Operated Valve	PCCV	1-4	PB	1yr	Harsh	Harsh	No (1)	M	I	
37	CVS-AOV-001C	Air Operated Valve	PCCV	1-4	PB	1yr	Harsh	Harsh	No (1)	M	I	
38	CVS-HCV-012	Air Operated Valve	PCCV	1-5	PB	1yr	Harsh	Harsh	No (1)	M	I	

Table 3D-2 US-APWR Environmental Qualification Equipment List (Sheet 31 of 65)

Item Num	Equipment Tag	Description	Location		Purpose	Operational Duration	Environmental Conditions	Radiation Condition	Influence of Submergence for Total Integrated Dose	Qualification Process	Seismic Category	Comments
			Building	Zone	RT, ESF, PAM, Pressure Boundary (PB), Other(1)		Harsh or Mild	Harsh or Mild	Yes/No	E=Electrical M=Mechanical	I, II, Non	
39	CVS-HCV-100	Air Operated Valve	PCCV	1-5	PB	1yr	Harsh	Harsh	No (1)	M	I	
40	CVS-AOV-224	Air Operated Valve	PCCV	1-5	PB	1yr	Harsh	Harsh	No (1)	M	I	
41	Deleted											
42	Deleted											
43	CVS-AOV-196A	Air Operated Valve	PCCV	1-4	PB	1yr	Harsh	Harsh	No (1)	M	I	
44	CVS-AOV-196B	Air Operated Valve	PCCV	1-4	PB	1yr	Harsh	Harsh	No (1)	M	I	
45	CVS-AOV-196C	Air Operated Valve	PCCV	1-4	PB	1yr	Harsh	Harsh	No (1)	M	I	
46	CVS-AOV-196D	Air Operated Valve	PCCV	1-4	PB	1yr	Harsh	Harsh	No (1)	M	I	
Equipment (Safety Injection System)												
1	SIS-MPP-001A	A-Safety Injection Pump	R/B	6	ESF	1yr	Mild	Harsh	No (1)	M	I	
2	SIS-MPP-001B	B-Safety Injection Pump	R/B	6	ESF	1yr	Mild	Harsh	No (1)	M	I	
3	SIS-MPP-001C	C-Safety Injection Pump	R/B	6	ESF	1yr	Mild	Harsh	No (1)	M	I	
4	SIS-MPP-001D	D-Safety Injection Pump	R/B	6	ESF	1yr	Mild	Harsh	No (1)	M	I	
5	Deleted											
6	Deleted											
7	Deleted											
8	Deleted											
9	SIS-MOV-001A	Motor Operated Valve	R/B	6	ESF	1yr	Mild	Harsh	No (1)	M	I	
10	SIS-MOV-001B	Motor Operated Valve	R/B	6	ESF	1yr	Mild	Harsh	No (1)	M	I	
11	SIS-MOV-009A	Motor Operated Valve	R/B	6	ESF	1yr	Mild	Harsh	No (1)	M	I	
12	SIS-MOV-009B	Motor Operated Valve	R/B	6	ESF	1yr	Mild	Harsh	No (1)	M	I	
13	SIS-MOV-011A	Motor Operated Valve	PCCV	1-5	ESF	1yr	Harsh	Harsh	No (1)	M	I	
14	SIS-MOV-011B	Motor Operated Valve	PCCV	1-5	ESF	1yr	Harsh	Harsh	No (1)	M	I	
15	SIS-MOV-014A	Motor Operated Valve	PCCV	1-5	ESF	1yr	Harsh	Harsh	No (1)	M	I	
16	SIS-MOV-014B	Motor Operated Valve	PCCV	1-5	ESF	1yr	Harsh	Harsh	No (1)	M	I	

Table 3D-2 US-APWR Environmental Qualification Equipment List (Sheet 32 of 65)

Item Num	Equipment Tag	Description	Location		Purpose	Operational Duration	Environmental Conditions	Radiation Condition	Influence of Submergence for Total Integrated Dose	Qualification Process	Seismic Category	Comments
			Building	Zone	RT, ESF, PAM, Pressure Boundary (PB), Other(1)		Harsh or Mild	Harsh or Mild	Yes/No	E=Electrical M=Mechanical	I, II, Non	
17	SIS-MOV-031A	Motor Operated Valve	PCCV	1-4	ESF	1yr	Harsh	Harsh	No (1)	M	I	
18	SIS-MOV-032A	Motor Operated Valve	PCCV	1-4	ESF	1yr	Harsh	Harsh	No (1)	M	I	
19	SIS-MOV-001C	Motor Operated Valve	R/B	6	ESF	1yr	Mild	Harsh	No (1)	M	I	
20	SIS-MOV-001D	Motor Operated Valve	R/B	6	ESF	1yr	Mild	Harsh	No (1)	M	I	
21	SIS-MOV-009C	Motor Operated Valve	R/B	6	ESF	1yr	Mild	Harsh	No (1)	M	I	
22	SIS-MOV-009D	Motor Operated Valve	R/B	6	ESF	1yr	Mild	Harsh	No (1)	M	I	
23	SIS-MOV-011C	Motor Operated Valve	PCCV	1-5	ESF	1yr	Harsh	Harsh	No (1)	M	I	
24	SIS-MOV-011D	Motor Operated Valve	PCCV	1-5	ESF	1yr	Harsh	Harsh	No (1)	M	I	
25	SIS-MOV-014C	Motor Operated Valve	PCCV	1-5	ESF	1yr	Harsh	Harsh	No (1)	M	I	
26	SIS-MOV-014D	Motor Operated Valve	PCCV	1-5	ESF	1yr	Harsh	Harsh	No (1)	M	I	
27	SIS-MOV-024A	Motor Operated Valve	PCCV	1-5	PB	1yr	Harsh	Harsh	No (1)	M	I	
28	SIS-MOV-024B	Motor Operated Valve	PCCV	1-5	PB	1yr	Harsh	Harsh	No (1)	M	I	
29	SIS-MOV-024C	Motor Operated Valve	PCCV	1-5	PB	1yr	Harsh	Harsh	No (1)	M	I	
30	SIS-MOV-024D	Motor Operated Valve	PCCV	1-5	PB	1yr	Harsh	Harsh	No (1)	M	I	
31	SIS-MOV-031D	Motor Operated Valve	PCCV	1-4	ESF	1yr	Harsh	Harsh	No (1)	M	I	
32	SIS-MOV-032D	Motor Operated Valve	PCCV	1-4	ESF	1yr	Harsh	Harsh	No (1)	M	I	
33	SIS-MOV-121A	Motor Operated Valve	PCCV	1-5	ESF	1yr	Harsh	Harsh	No (1)	M	I	
34	SIS-MOV-121B	Motor Operated Valve	PCCV	1-5	ESF	1yr	Harsh	Harsh	No (1)	M	I	
35	SIS-MOV-125A	Motor Operated Valve	PCCV	1-5	ESF	1yr	Harsh	Harsh	No (1)	M	I	
36	SIS-MOV-125B	Motor Operated Valve	PCCV	1-5	ESF	1yr	Harsh	Harsh	No (1)	M	I	
37	SIS-MOV-125C	Motor Operated Valve	PCCV	1-5	ESF	1yr	Harsh	Harsh	No (1)	M	I	
38	SIS-MOV-125D	Motor Operated Valve	PCCV	1-5	ESF	1yr	Harsh	Harsh	No (1)	M	I	
39	SIS-MOV-101A	Motor Operated Valve	PCCV	1-5	ESF	1yr	Harsh	Harsh	No (1)	M	I	
40	SIS-MOV-101B	Motor Operated Valve	PCCV	1-5	ESF	1yr	Harsh	Harsh	No (1)	M	I	
41	SIS-MOV-101C	Motor Operated Valve	PCCV	1-5	ESF	1yr	Harsh	Harsh	No (1)	M	I	

Table 3D-2 US-APWR Environmental Qualification Equipment List (Sheet 33 of 65)

Item Num	Equipment Tag	Description	Location		Purpose	Operational Duration	Environmental Conditions	Radiation Condition	Influence of Submergence for Total Integrated Dose	Qualification Process	Seismic Category	Comments
			Building	Zone	RT, ESF, PAM, Pressure Boundary (PB), Other(1)		Harsh or Mild	Harsh or Mild	Yes/No	E=Electrical M=Mechanical	I, II, Non	
42	SIS-MOV-101D	Motor Operated Valve	PCCV	1-5	ESF	1yr	Harsh	Harsh	No (1)	M	I	
43	Deleted											
44	Deleted											
45	Deleted											
46	Deleted											
47	Deleted											
48	SIS-HCV-017	Air Operated Valve	PCCV	1-5	PB	1yr	Harsh	Harsh	No (1)	M	I	
49	SIS-AOV-215A	Air Operated Valve	PCCV	1-5	PB	1yr	Harsh	Harsh	No (1)	M	I	
50	SIS-AOV-215B	Air Operated Valve	PCCV	1-5	PB	1yr	Harsh	Harsh	No (1)	M	I	
51	SIS-AOV-215C	Air Operated Valve	PCCV	1-5	PB	1yr	Harsh	Harsh	No (1)	M	I	
52	SIS-AOV-215D	Air Operated Valve	PCCV	1-5	PB	1yr	Harsh	Harsh	No (1)	M	I	
53	SIS-AOV-201B	Air Operated Valve	PCCV	1-5	PB	1yr	Harsh	Harsh	No (1)	M	I	
54	SIS-AOV-201C	Air Operated Valve	PCCV	1-5	PB	1yr	Harsh	Harsh	No (1)	M	I	
55	Deleted											
56	SIS-AOV-114	Air Operated Valve	R/B	6	ESF	5min	Mild	Harsh	No (1)	M	I	
Equipment (Residual Heat Removal System)												
1	RHS-MPP-001A	A-Containment Spray/Residual Heat Removal Pump	R/B	6	ESF	1yr	Mild	Harsh	No (1)	M	I	
2	RHS-MPP-001B	B-Containment Spray/Residual Heat Removal Pump	R/B	6	ESF	1yr	Mild	Harsh	No (1)	M	I	
3	RHS-MPP-001C	C-Containment Spray/Residual Heat Removal Pump	R/B	6	ESF	1yr	Mild	Harsh	No (1)	M	I	
4	RHS-MPP-001D	D-Containment Spray/Residual Heat Removal Pump	R/B	6	ESF	1yr	Mild	Harsh	No (1)	M	I	
5	Deleted											
6	Deleted											
7	Deleted											
8	Deleted											
9	RHS-MOV-021A	Motor Operated Valve	R/B	6	ESF	1yr	Mild	Harsh	No (1)	M	I	

Table 3D-2 US-APWR Environmental Qualification Equipment List (Sheet 34 of 65)

Item Num	Equipment Tag	Description	Location		Purpose	Operational Duration	Environmental Conditions	Radiation Condition	Influence of Submergence for Total Integrated Dose	Qualification Process	Seismic Category	Comments
			Building	Zone	RT, ESF, PAM, Pressure Boundary (PB), Other(1)		Harsh or Mild	Harsh or Mild	Yes/No	E=Electrical M=Mechanical	I, II, Non	
10	RHS-MOV-021B	Motor Operated Valve	R/B	6	ESF	1yr	Mild	Harsh	No (1)	M	I	
11	RHS-MOV-001A	Motor Operated Valve	PCCV	1-4	ESF	1yr	Harsh	Harsh	No (1)	M	I	
12	RHS-MOV-001B	Motor Operated Valve	PCCV	1-4	ESF	1yr	Harsh	Harsh	No (1)	M	I	
13	RHS-MOV-002A	Motor Operated Valve	PCCV	1-5	ESF	1yr	Harsh	Harsh	No (1)	M	I	
14	RHS-MOV-002B	Motor Operated Valve	PCCV	1-5	ESF	1yr	Harsh	Harsh	No (1)	M	I	
15	RHS-MOV-025A	Motor Operated Valve	PCCV	1-5	ESF	1yr	Harsh	Harsh	No (1)	M	I	
16	RHS-MOV-025B	Motor Operated Valve	PCCV	1-5	ESF	1yr	Harsh	Harsh	No (1)	M	I	
17	RHS-MOV-026A	Motor Operated Valve	PCCV	1-5	ESF	1yr	Harsh	Harsh	No (1)	M	I	
18	RHS-MOV-026B	Motor Operated Valve	PCCV	1-5	ESF	1yr	Harsh	Harsh	No (1)	M	I	
19	RHS-HCV-023	Hand Control Valve	R/B	6	PB	1yr	Mild	Harsh	No (1)	M	I	
20	RHS-FCV-021	Flow Control Valve	R/B	6	PB	1yr	Mild	Harsh	No (1)	M	I	
21	RHS-AOV-024B	Air Operated Valve	PCCV	1-5	PB	1yr	Harsh	Harsh	No (1)	M	I	
22	RHS-MOV-021C	Motor Operated Valve	R/B	6	ESF	1yr	Mild	Harsh	No (1)	M	I	
23	RHS-MOV-021D	Motor Operated Valve	R/B	6	ESF	1yr	Mild	Harsh	No (1)	M	I	
24	RHS-MOV-001C	Motor Operated Valve	PCCV	1-4	ESF	1yr	Harsh	Harsh	No (1)	M	I	
25	RHS-MOV-001D	Motor Operated Valve	PCCV	1-4	ESF	1yr	Harsh	Harsh	No (1)	M	I	
26	RHS-MOV-002C	Motor Operated Valve	PCCV	1-5	ESF	1yr	Harsh	Harsh	No (1)	M	I	
27	RHS-MOV-002D	Motor Operated Valve	PCCV	1-5	ESF	1yr	Harsh	Harsh	No (1)	M	I	
28	RHS-MOV-025C	Motor Operated Valve	PCCV	1-5	ESF	1yr	Harsh	Harsh	No (1)	M	I	
29	RHS-MOV-025D	Motor Operated Valve	PCCV	1-5	ESF	1yr	Harsh	Harsh	No (1)	M	I	
30	RHS-MOV-026C	Motor Operated Valve	PCCV	1-5	ESF	1yr	Harsh	Harsh	No (1)	M	I	
31	RHS-MOV-026D	Motor Operated Valve	PCCV	1-5	ESF	1yr	Harsh	Harsh	No (1)	M	I	
32	RHS-HCV-033	Hand Control Valve	R/B	6	PB	1yr	Mild	Harsh	No (1)	M	I	
33	RHS-FCV-031	Flow Control Valve	R/B	6	PB	1yr	Mild	Harsh	No (1)	M	I	
34	RHS-AOV-024C	Air Operated Valve	PCCV	1-5	PB	1yr	Harsh	Harsh	No (1)	M	I	

Table 3D-2 US-APWR Environmental Qualification Equipment List (Sheet 35 of 65)

Item Num	Equipment Tag	Description	Location		Purpose	Operational Duration	Environmental Conditions	Radiation Condition	Influence of Submergence for Total Integrated Dose	Qualification Process	Seismic Category	Comments
			Building	Zone	RT, ESF, PAM, Pressure Boundary (PB), Other(1)		Harsh or Mild	Harsh or Mild	Yes/No	E=Electrical M=Mechanical	I, II, Non	
35	Deleted											
36	Deleted											
37	Deleted											
38	Deleted											
39	Deleted											
40	Deleted											
41	Deleted											
42	Deleted											
Equipment (Emergency Feedwater System)												
1	EFS-MPP-001A	A-Emergency Feedwater Pump	R/B	8	ESF	2wks	Mild	Harsh	No (1)	M	I	
2	EFS-MPP-001B	B-Emergency Feedwater Pump	R/B	8	ESF	2wks	Mild	Harsh	No (1)	M	I	
3	EFS-MPP-001C	C-Emergency Feedwater Pump	R/B	8	ESF	2wks	Mild	Harsh	No (1)	M	I	
4	EFS-MPP-001D	D-Emergency Feedwater Pump	R/B	8	ESF	2wks	Mild	Harsh	No (1)	M	I	
5	Deleted											
6	Deleted											
7	EFS-MOV-006A	Motor Operated Valve	R/B	8	ESF	2wks	Mild	Harsh	No(1)	M	I	
8	EFS-MOV-006B	Motor Operated Valve	R/B	8	ESF	2wks	Mild	Harsh	No(1)	M	I	
9	EFS-MOV-014A	Motor Operated Valve	R/B	8	ESF	2wks	Mild	Harsh	No (1)	M	I	
10	EFS-MOV-014B	Motor Operated Valve	R/B	8	ESF	2wks	Mild	Harsh	No (1)	M	I	
11	EFS-MOV-014C	Motor Operated Valve	R/B	8	ESF	2wks	Mild	Harsh	No (1)	M	I	
12	EFS-MOV-014D	Motor Operated Valve	R/B	8	ESF	2wks	Mild	Harsh	No (1)	M	I	
13	EFS-MOV-017A	A-Emergency Feedwater Control Valve	R/B	10	ESF	2wks	Harsh	Harsh	No (1)	M	I	
14	EFS-MOV-017B	B-Emergency Feedwater Control Valve	R/B	10	ESF	2wks	Harsh	Harsh	No (1)	M	I	
15	EFS-MOV-017C	C-Emergency Feedwater Control Valve	R/B	10	ESF	2wks	Harsh	Harsh	No (1)	M	I	
16	EFS-MOV-017D	D-Emergency Feedwater Control Valve	R/B	10	ESF	2wks	Harsh	Harsh	No (1)	M	I	

Table 3D-2 US-APWR Environmental Qualification Equipment List (Sheet 36 of 65)

Item Num	Equipment Tag	Description	Location		Purpose	Operational Duration	Environmental Conditions	Radiation Condition	Influence of Submergence for Total Integrated Dose	Qualification Process	Seismic Category	Comments
			Building	Zone	RT, ESF, PAM, Pressure Boundary (PB), Other(1)		Harsh or Mild	Harsh or Mild	Yes/No	E=Electrical M=Mechanical	I, II, Non	
17	EFS-MOV-019A	A-Emergency Feedwater Isolation Valve	R/B	10	ESF	2wks	Harsh	Harsh	No (1)	M	I	
18	EFS-MOV-019B	B-Emergency Feedwater Isolation Valve	R/B	10	ESF	2wks	Harsh	Harsh	No (1)	M	I	
19	EFS-MOV-019C	C-Emergency Feedwater Isolation Valve	R/B	10	ESF	2wks	Harsh	Harsh	No (1)	M	I	
20	EFS-MOV-019D	D-Emergency Feedwater Isolation Valve	R/B	10	ESF	2wks	Harsh	Harsh	No (1)	M	I	
21	EFS-MOV-101A	A-Emergency Feedwater Pump A-Main Steam Line Steam Isolation Valve	R/B	10	ESF	2wks	Harsh	Harsh	No (1)	M	I	
22	EFS-MOV-101B	A-Emergency Feedwater Pump B-Main Steam Line Steam Isolation Valve	R/B	10	ESF	2wks	Harsh	Harsh	No (1)	M	I	
23	EFS-MOV-101C	D-Emergency Feedwater Pump C-Main Steam Line Steam Isolation Valve	R/B	10	ESF	2wks	Harsh	Harsh	No (1)	M	I	
24	EFS-MOV-101D	D-Emergency Feedwater Pump D-Main Steam Line Steam Isolation Valve	R/B	10	ESF	2wks	Harsh	Harsh	No (1)	M	I	
25	EFS-MOV-103A, EFS-MOV-103B	A-Emergency Feedwater Pump Actuation Valve on A-steam supply line, A-Emergency Feedwater Pump Actuation Valve on B-steam supply line	R/B	10	ESF	2wks	Harsh	Harsh	No (1)	M	I	
26	EFS-MOV-103C, EFS-MOV-103D	D-Emergency Feedwater Pump Actuation Valve on C-steam supply line, D-Emergency Feedwater Pump Actuation Valve on D-steam supply line	R/B	10	ESF	2wks	Harsh	Harsh	No (1)	M	I	
27	EFS-MOV-031	EFW Supply to SFP Isolation Valve	R/B	14	ESF	2wks	Mild	Mild	No (1)	M	I	
28	Deleted											
29	EFS-LCV-076	Air Operated Valve	R/B	14	ESF	2wks	Mild	Mild	No (1)	M	I	
30	EFS-LCV-077	Air Operated Valve	R/B	14	ESF	2wks	Mild	Mild	No (1)	M	I	
31	EFS-LCV-078	Air Operated Valve	R/B	8	ESF	2wks	Mild	Harsh	No (1)	M	I	
32	EFS-LCV-079	Air Operated Valve	R/B	10	ESF	2wks	Harsh	Harsh	No (1)	M	I	
33	EFS-LCV-085	Air Operated Valve	R/B	10	ESF	2wks	Harsh	Harsh	No (1)	M	I	
34	EFS-LCV-086	Air Operated Valve	R/B	8	ESF	2wks	Mild	Harsh	No (1)	M	I	
35	EFS-LCV-087	Air Operated Valve	R/B	14	ESF	2wks	Mild	Mild	No (1)	M	I	
36	EFS-LCV-088	Air Operated Valve	R/B	14	ESF	2wks	Mild	Mild	No (1)	M	I	
37	EFS-LCV-089	Air Operated Valve	R/B	10	ESF	2wks	Harsh	Harsh	No (1)	M	I	

Table 3D-2 US-APWR Environmental Qualification Equipment List (Sheet 37 of 65)

Item Num	Equipment Tag	Description	Location		Purpose	Operational Duration	Environmental Conditions	Radiation Condition	Influence of Submergence for Total Integrated Dose	Qualification Process	Seismic Category	Comments
			Building	Zone	RT, ESF, PAM, Pressure Boundary (PB), Other(1)		Harsh or Mild	Harsh or Mild	Yes/No	E=Electrical M=Mechanical	I, II, Non	
Equipment (Main Feedwater System)												
1	FWS-SMV-512A	A-Main Feedwater Isolation Valve	R/B	10	ESF	5min	Harsh	Harsh	No (2)	M	I	
2	FWS-SMV-512B	B-Main Feedwater Isolation Valve	R/B	10	ESF	5min	Harsh	Harsh	No (2)	M	I	
3	FWS-SMV-512C	C-Main Feedwater Isolation Valve	R/B	10	ESF	5min	Harsh	Harsh	No (2)	M	I	
4	FWS-SMV-512D	D-Main Feedwater Isolation Valve	R/B	10	ESF	5min	Harsh	Harsh	No (2)	M	I	
5	FWS-MOV-514A	Motor Operated Valve	R/B	10	PB	2wks	Harsh	Harsh	No (2)	M	I	
6	FWS-MOV-514B	Motor Operated Valve	R/B	10	PB	2wks	Harsh	Harsh	No (2)	M	I	
7	FWS-MOV-514C	Motor Operated Valve	R/B	10	PB	2wks	Harsh	Harsh	No (2)	M	I	
8	FWS-MOV-514D	Motor Operated Valve	R/B	10	PB	2wks	Harsh	Harsh	No (2)	M	I	
9	FWS-FCV-510	A-Main Feedwater Regulation Valve	R/B	10	ESF	5min	Harsh	Harsh	No (2)	M	I	
10	FWS-FCV-520	B-Main Feedwater Regulation Valve	R/B	10	ESF	5min	Harsh	Harsh	No (2)	M	I	
11	FWS-FCV-530	C-Main Feedwater Regulation Valve	R/B	10	ESF	5min	Harsh	Harsh	No (2)	M	I	
12	FWS-FCV-540	D-Main Feedwater Regulation Valve	R/B	10	ESF	5min	Harsh	Harsh	No (2)	M	I	
13	FWS-FCV-511	A-Main Feedwater Bypass Regulation Valve	R/B	10	ESF	5min	Harsh	Harsh	No (2)	M	I	
14	FWS-FCV-521	B-Main Feedwater Bypass Regulation Valve	R/B	10	ESF	5min	Harsh	Harsh	No (2)	M	I	
15	FWS-FCV-531	C-Main Feedwater Bypass Regulation Valve	R/B	10	ESF	5min	Harsh	Harsh	No (2)	M	I	
16	FWS-FCV-541	D-Main Feedwater Bypass Regulation Valve	R/B	10	ESF	5min	Harsh	Harsh	No (2)	M	I	
17	FWS-LCV-610	A-Steam Generator Water Filling Control Valve	R/B	10	ESF	5min	Harsh	Harsh	No (2)	M	I	
18	FWS-LCV-620	B-Steam Generator Water Filling Control Valve	R/B	10	ESF	5min	Harsh	Harsh	No (2)	M	I	
19	FWS-LCV-630	C-Steam Generator Water Filling Control Valve	R/B	10	ESF	5min	Harsh	Harsh	No (2)	M	I	
20	FWS-LCV-640	D-Steam Generator Water Filling Control Valve	R/B	10	ESF	5min	Harsh	Harsh	No (2)	M	I	
Equipment (Main Steam System)												
1	Deleted											
2	Deleted											
3	Deleted											

Table 3D-2 US-APWR Environmental Qualification Equipment List (Sheet 38 of 65)

Item Num	Equipment Tag	Description	Location		Purpose	Operational Duration	Environmental Conditions	Radiation Condition	Influence of Submergence for Total Integrated Dose	Qualification Process	Seismic Category	Comments
			Building	Zone	RT, ESF, PAM, Pressure Boundary (PB), Other(1)		Harsh or Mild	Harsh or Mild	Yes/No	E=Electrical M=Mechanical	I, II, Non	
4	Deleted											
5	Deleted											
6	Deleted											
7	Deleted											
8	Deleted											
9	Deleted											
10	Deleted											
11	Deleted											
12	Deleted											
13	Deleted											
14	Deleted											
15	Deleted											
16	Deleted											
17	Deleted											
18	Deleted											
19	Deleted											
20	Deleted											
21	Deleted											
22	Deleted											
23	Deleted											
24	Deleted											
25	MSS-MOV-507A	A-Main Steam Relief Valve Block Valve	R/B	10	ESF	1yr	Harsh	Harsh	No (1)	M	I	
26	MSS-MOV-507B	B-Main Steam Relief Valve Block Valve	R/B	10	ESF	1yr	Harsh	Harsh	No (1)	M	I	
27	MSS-MOV-507C	C-Main Steam Relief Valve Block Valve	R/B	10	ESF	1yr	Harsh	Harsh	No (1)	M	I	
28	MSS-MOV-507D	D-Main Steam Relief Valve Block Valve	R/B	10	ESF	1yr	Harsh	Harsh	No (1)	M	I	

Table 3D-2 US-APWR Environmental Qualification Equipment List (Sheet 39 of 65)

Item Num	Equipment Tag	Description	Location		Purpose	Operational Duration	Environmental Conditions	Radiation Condition	Influence of Submergence for Total Integrated Dose	Qualification Process	Seismic Category	Comments
			Building	Zone	RT, ESF, PAM, Pressure Boundary (PB), Other(1)		Harsh or Mild	Harsh or Mild	Yes/No	E=Electrical M=Mechanical	I, II, Non	
29	MSS-MOV-508A	A-Main Steam Depressurization Valve	R/B	10	ESF	1yr	Harsh	Harsh	No (1)	M	I	
30	MSS-MOV-508B	B-Main Steam Depressurization Valve	R/B	10	ESF	1yr	Harsh	Harsh	No (1)	M	I	
31	MSS-MOV-508C	C-Main Steam Depressurization Valve	R/B	10	ESF	1yr	Harsh	Harsh	No (1)	M	I	
32	MSS-MOV-508D	D-Main Steam Depressurization Valve	R/B	10	ESF	1yr	Harsh	Harsh	No (1)	M	I	
33	MSS-SMV-515A	A-Main Steam Isolation Valve	R/B	10	ESF	1yr	Harsh	Harsh	No (1)	M	I	
34	MSS-SMV-515B	B-Main Steam Isolation Valve	R/B	10	ESF	1yr	Harsh	Harsh	No (1)	M	I	
35	MSS-SMV-515C	C-Main Steam Isolation Valve	R/B	10	ESF	1yr	Harsh	Harsh	No (1)	M	I	
36	MSS-SMV-515D	D-Main Steam Isolation Valve	R/B	10	ESF	1yr	Harsh	Harsh	No (1)	M	I	
37	MSS-HCV-565	A-Main Steam Bypass Isolation Valve	R/B	10	ESF	5min	Harsh	Harsh	No (1)	M	I	
38	MSS-HCV-575	B-Main Steam Bypass Isolation Valve	R/B	10	ESF	5min	Harsh	Harsh	No (1)	M	I	
39	MSS-HCV-585	C-Main Steam Bypass Isolation Valve	R/B	10	ESF	5min	Harsh	Harsh	No (1)	M	I	
40	MSS-HCV-595	D-Main Steam Bypass Isolation Valve	R/B	10	ESF	5min	Harsh	Harsh	No (1)	M	I	
41	MSS-PCV-515	A-Main Steam Relief Valve	R/B	10	PB	1yr	Harsh	Harsh	No (1)	M	I	
42	MSS-PCV-525	B-Main Steam Relief Valve	R/B	10	PB	1yr	Harsh	Harsh	No (1)	M	I	
43	MSS-PCV-535	C-Main Steam Relief Valve	R/B	10	PB	1yr	Harsh	Harsh	No (1)	M	I	
44	MSS-PCV-545	D-Main Steam Relief Valve	R/B	10	PB	1yr	Harsh	Harsh	No (1)	M	I	
45	Deleted											
46	Deleted											
47	Deleted											
48	Deleted											
49	Deleted											
50	Deleted											
51	Deleted											
52	Deleted											
53	Deleted											

Table 3D-2 US-APWR Environmental Qualification Equipment List (Sheet 40 of 65)

Item Num	Equipment Tag	Description	Location		Purpose	Operational Duration	Environmental Conditions	Radiation Condition	Influence of Submergence for Total Integrated Dose	Qualification Process	Seismic Category	Comments
			Building	Zone	RT, ESF, PAM, Pressure Boundary (PB), Other(1)		Harsh or Mild	Harsh or Mild	Yes/No	E=Electrical M=Mechanical	I, II, Non	
54	Deleted											
55	Deleted											
56	Deleted											
57	Deleted											
58	Deleted											
59	Deleted											
60	MSS-MOV-701A	A-Main Steam Drain Isolation Valve	R/B	10	ESF	1yr	Harsh	Harsh	No (1)	M	I	
61	MSS-MOV-701B	B-Main Steam Drain Isolation Valve	R/B	10	ESF	1yr	Harsh	Harsh	No (1)	M	I	
62	MSS-MOV-701C	C-Main Steam Drain Isolation Valve	R/B	10	ESF	1yr	Harsh	Harsh	No (1)	M	I	
63	MSS-MOV-701D	D-Main Steam Drain Isolation Valve	R/B	10	ESF	1yr	Harsh	Harsh	No (1)	M	I	
64	MSS-LCV-564	A-Main Steam Drain Trap Bypass Valve	R/B	10	ESF	1yr	Harsh	Harsh	No (1)	M	I	
65	MSS-LCV-574	B-Main Steam Drain Trap Bypass Valve	R/B	10	ESF	1yr	Harsh	Harsh	No (1)	M	I	
66	MSS-LCV-584	C-Main Steam Drain Trap Bypass Valve	R/B	10	ESF	1yr	Harsh	Harsh	No (1)	M	I	
67	MSS-LCV-594	D-Main Steam Drain Trap Bypass Valve	R/B	10	ESF	1yr	Harsh	Harsh	No (1)	M	I	
Equipment (Containment Spray System)												
68	Deleted											
69	CSS-MOV-004A	Motor Operated Valve	R/B	6	ESF	1yr	Mild	Harsh	No (1)	M	I	
70	CSS-MOV-004B	Motor Operated Valve	R/B	6	ESF	1yr	Mild	Harsh	No (1)	M	I	
71	CSS-MOV-001A	Motor Operated Valve	R/B	6	ESF	1yr	Mild	Harsh	No (1)	M	I	
72	CSS-MOV-001B	Motor Operated Valve	R/B	6	ESF	1yr	Mild	Harsh	No (1)	M	I	
73	CSS-MOV-004C	Motor Operated Valve	R/B	6	ESF	1yr	Mild	Harsh	No (1)	M	I	
74	CSS-MOV-004D	Motor Operated Valve	R/B	6	ESF	1yr	Mild	Harsh	No (1)	M	I	
75	CSS-MOV-001C	Motor Operated Valve	R/B	6	ESF	1yr	Mild	Harsh	No (1)	M	I	
76	CSS-MOV-001D	Motor Operated Valve	R/B	6	ESF	1yr	Mild	Harsh	No (1)	M	I	
77	CSS-MOV-011	Motor Operated Valve	R/B	6	PB	1yr	Mild	Harsh	No (1)	M	I	

Table 3D-2 US-APWR Environmental Qualification Equipment List (Sheet 41 of 65)

Item Num	Equipment Tag	Description	Location		Purpose	Operational Duration	Environmental Conditions	Radiation Condition	Influence of Submergence for Total Integrated Dose	Qualification Process	Seismic Category	Comments
			Building	Zone	RT, ESF, PAM, Pressure Boundary (PB), Other(1)		Harsh or Mild	Harsh or Mild	Yes/No	E=Electrical M=Mechanical	I, II, Non	
Equipment (Component Cooling Water System)												
1	NCS-MPP-001A	A-Component Cooling Water Pump	R/B	8	ESF	1yr	Mild	Harsh	No (1)	M	I	
2	NCS-MPP-001B	B-Component Cooling Water Pump	R/B	8	ESF	1yr	Mild	Harsh	No (1)	M	I	
3	NCS-MPP-001C	C-Component Cooling Water Pump	R/B	8	ESF	1yr	Mild	Harsh	No (1)	M	I	
4	NCS-MPP-001D	D-Component Cooling Water Pump	R/B	8	ESF	1yr	Mild	Harsh	No (1)	M	I	
5	Deleted											
6	Deleted											
7	Deleted											
8	Deleted											
9	Deleted											
10	Deleted											
11	Deleted											
12	Deleted											
13	NCS-MOV-007A	Motor Operated Valve	R/B	8	ESF	1yr	Mild	Harsh	No (1)	M	I	
14	NCS-MOV-007B	Motor Operated Valve	R/B	8	ESF	1yr	Mild	Harsh	No (1)	M	I	
15	NCS-MOV-020A	Motor Operated Valve	R/B	8	ESF	1yr	Mild	Harsh	No (1)	M	I	
16	NCS-MOV-020B	Motor Operated Valve	R/B	8	ESF	1yr	Mild	Harsh	No (1)	M	I	
17	Deleted											
18	Deleted											
19	NCS-RCV-056A	Radiation Control Valve	R/B	8	PB	1yr	Mild	Harsh	No (1)	M	I	
20	NCS-LCV-010A	Level Control Valve	R/B	8	PB	1yr	Mild	Harsh	No (1)	M	I	
21	NCS-MOV-007C	Motor Operated Valve	R/B	8	ESF	1yr	Mild	Harsh	No (1)	M	I	
22	NCS-MOV-007D	Motor Operated Valve	R/B	8	ESF	1yr	Mild	Harsh	No (1)	M	I	
23	NCS-MOV-020C	Motor Operated Valve	R/B	8	ESF	1yr	Mild	Harsh	No (1)	M	I	
24	NCS-MOV-020D	Motor Operated Valve	R/B	8	ESF	1yr	Mild	Harsh	No (1)	M	I	

Table 3D-2 US-APWR Environmental Qualification Equipment List (Sheet 42 of 65)

Item Num	Equipment Tag	Description	Location		Purpose	Operational Duration	Environmental Conditions	Radiation Condition	Influence of Submergence for Total Integrated Dose	Qualification Process	Seismic Category	Comments
			Building	Zone	RT, ESF, PAM, Pressure Boundary (PB), Other(1)		Harsh or Mild	Harsh or Mild	Yes/No	E=Electrical M=Mechanical	I, II, Non	
25	NCS-RCV-056B	Radiation Control Valve	R/B	8	PB	1yr	Mild	Harsh	No (1)	M	I	
26	NCS-LCV-010C	Level Control Valve	R/B	8	PB	1yr	Mild	Harsh	No (2)	M	I	
27	NCS-MOV-145A	Motor Operated Valve	R/B	13-3	ESF	1yr	Mild	Mild	No (1)	M	I	
28	NCS-MOV-436B	Motor Operated Valve	PCCV	1-5	ESF	1yr	Harsh	Harsh	No (1)	M	I	
29	NCS-MOV-438A	Motor Operated Valve	R/B	6	ESF	1yr	Mild	Harsh	No (1)	M	I	
30	NCS-MOV-145B	Motor Operated Valve	R/B	13-3	ESF	1yr	Mild	Mild	No (1)	M	I	
31	NCS-MOV-145C	Motor Operated Valve	R/B	13-3	ESF	1yr	Mild	Mild	No (1)	M	I	
32	NCS-MOV-145D	Motor Operated Valve	R/B	13-3	ESF	1yr	Mild	Mild	No (1)	M	I	
33	NCS-MOV-232A	Motor Operated Valve	R/B	6	ESF	1yr	Mild	Harsh	No (1)	M	I	
34	NCS-MOV-232B	Motor Operated Valve	R/B	6	ESF	1yr	Mild	Harsh	No (1)	M	I	
35	NCS-MOV-233A	Motor Operated Valve	R/B	6	ESF	1yr	Mild	Harsh	No (1)	M	I	
36	NCS-MOV-233B	Motor Operated Valve	R/B	6	ESF	1yr	Mild	Harsh	No (1)	M	I	
37	NCS-MOV-234A	Motor Operated Valve	R/B	6	ESF	1yr	Mild	Harsh	No (1)	M	I	
38	NCS-MOV-234B	Motor Operated Valve	R/B	6	ESF	1yr	Mild	Harsh	No (1)	M	I	
39	NCS-MOV-316A	Motor Operated Valve	R/B	13-3	PB	1yr	Mild	Mild	No (1)	M	I	
40	NCS-MOV-316B	Motor Operated Valve	R/B	13-3	PB	1yr	Mild	Mild	No (1)	M	I	
41	Deleted											
42	Deleted											
43	Deleted											
44	Deleted											
45	Deleted											
46	Deleted											
47	NCS-MOV-436A	Motor Operated Valve	PCCV	1-5	ESF	1yr	Harsh	Harsh	No (1)	M	I	
48	NCS-FCV-131A	Flow Control Valve	PCCV	1-5	ESF	1yr	Harsh	Harsh	No (1)	M	I	
49	NCS-FCV-131B	Flow Control Valve	PCCV	1-5	ESF	1yr	Harsh	Harsh	No (1)	M	I	

Table 3D-2 US-APWR Environmental Qualification Equipment List (Sheet 43 of 65)

Item Num	Equipment Tag	Description	Location		Purpose	Operational Duration	Environmental Conditions	Radiation Condition	Influence of Submergence for Total Integrated Dose	Qualification Process	Seismic Category	Comments
			Building	Zone	RT, ESF, PAM, Pressure Boundary (PB), Other(1)		Harsh or Mild	Harsh or Mild	Yes/No	E=Electrical M=Mechanical	I, II, Non	
50	NCS-MOV-511	Motor Operated Valve	R/B	6	ESF	5min	Mild	Harsh	No (1)	M	I	
51	NCS-TCV-013	Temperature Control Valve	PCCV	1-5	PB	1yr	Harsh	Harsh	No (1)	M	I	
52	NCS-MOV-517	Motor Operated Valve	R/B	6	ESF	5min	Mild	Harsh	No (1)	M	I	
53	NCS-MOV-401A	Motor Operated Valve	R/B	6	ESF	1yr	Mild	Harsh	No (1)	M	I	
54	NCS-MOV-402A	Motor Operated Valve	R/B	6	ESF	1yr	Mild	Harsh	No (1)	M	I	
55	NCS-MOV-531	Motor Operated Valve	R/B	6	ESF	5min	Mild	Harsh	No (1)	M	I	
56	NCS-MOV-537	Motor Operated Valve	R/B	6	ESF	5min	Mild	Harsh	No (1)	M	I	
57	NCS-FCV-129A	Flow Control Valve	PCCV	1-5	ESF	1yr	Harsh	Harsh	No (1)	M	I	
58	NCS-FCV-129B	Flow Control Valve	PCCV	1-5	ESF	1yr	Harsh	Harsh	No (1)	M	I	
59	NCS-MOV-401B	Motor Operated Valve	R/B	6	ESF	1yr	Mild	Harsh	No (1)	M	I	
60	NCS-MOV-402B	Motor Operated Valve	R/B	6	ESF	1yr	Mild	Harsh	No (1)	M	I	
61	NCS-MOV-446A	Motor Operated Valve	PCCV	1-5	ESF	1yr	Harsh	Harsh	No (1)	M	I	
62	NCS-MOV-446B	Motor Operated Valve	PCCV	1-5	ESF	1yr	Harsh	Harsh	No (1)	M	I	
63	NCS-MOV-446C	Motor Operated Valve	PCCV	1-5	ESF	1yr	Harsh	Harsh	No (1)	M	I	
64	NCS-MOV-446D	Motor Operated Valve	PCCV	1-5	ESF	1yr	Harsh	Harsh	No (1)	M	I	
65	Deleted											
66	Deleted											
67	Deleted											
68	Deleted											
69	Deleted											
70	Deleted											
71	NCS-FCV-130A	Flow Control Valve	PCCV	1-5	ESF	1yr	Harsh	Harsh	No (1)	M	I	
72	NCS-FCV-130B	Flow Control Valve	PCCV	1-5	ESF	1yr	Harsh	Harsh	No (1)	M	I	
73	NCS-MOV-438B	Motor Operated Valve	R/B	6	ESF	1yr	Mild	Harsh	No (1)	M	I	
74	NCS-FCV-132A	Flow Control Valve	PCCV	1-5	ESF	1yr	Harsh	Harsh	No (1)	M	I	

Table 3D-2 US-APWR Environmental Qualification Equipment List (Sheet 44 of 65)

Item Num	Equipment Tag	Description	Location		Purpose	Operational Duration	Environmental Conditions	Radiation Condition	Influence of Submergence for Total Integrated Dose	Qualification Process	Seismic Category	Comments
			Building	Zone	RT, ESF, PAM, Pressure Boundary (PB), Other(1)		Harsh or Mild	Harsh or Mild	Yes/No	E=Electrical M=Mechanical	I, II, Non	
75	NCS-FCV-132B	Flow Control Valve	PCCV	1-5	ESF	1yr	Harsh	Harsh	No (1)	M	I	
76	Deleted											
77	Deleted											
78	(Deleted)											
79	(Deleted)											
80	(Deleted)											
81	(Deleted)											
82	(Deleted)											
83	(Deleted)											
84	NCS-PCV-012	Pressure Control Valve	R/B	8	PB	1yr	Mild	Harsh	No (1)	M	I	
85	NCS-PCV-022	Pressure Control Valve	R/B	8	PB	1yr	Mild	Harsh	No (1)	M	I	
86	NCS-MOV-321A	Motor Operated Valve	R/B	13-3	PB	1yr	Mild	Mild	No (1)	M	I	
87	NCS-MOV-321B	Motor Operated Valve	R/B	13-3	PB	1yr	Mild	Mild	No (1)	M	I	
88	NCS-MOV-322A	Motor Operated Valve	R/B	13-3	PB	1yr	Mild	Mild	No (1)	M	I	
89	NCS-MOV-322B	Motor Operated Valve	R/B	13-3	PB	1yr	Mild	Mild	No (1)	M	I	
90	NCS-MOV-323A	Motor Operated Valve	R/B	13-3	PB	1yr	Mild	Mild	No (1)	M	I	
91	NCS-MOV-323B	Motor Operated Valve	R/B	13-3	PB	1yr	Mild	Mild	No (1)	M	I	
92	NCS-MOV-324A	Motor Operated Valve	R/B	13-3	PB	1yr	Mild	Mild	No (1)	M	I	
93	NCS-MOV-324B	Motor Operated Valve	R/B	13-3	PB	1yr	Mild	Mild	No (1)	M	I	
94	NCS-MOV-325A	Motor Operated Valve	R/B	13-3	PB	1yr	Mild	Mild	No (1)	M	I	
95	NCS-MOV-325B	Motor Operated Valve	R/B	13-3	PB	1yr	Mild	Mild	No (1)	M	I	
96	NCS-MOV-326A	Motor Operated Valve	R/B	13-3	PB	1yr	Mild	Mild	No (1)	M	I	
97	NCS-MOV-326B	Motor Operated Valve	R/B	13-3	PB	1yr	Mild	Mild	No (1)	M	I	
98	NCS-MOV-241	Motor Operated Valve	R/B	13-3	PB	1yr	Mild	Mild	No (1)	M	I	
99	NCS-MOV-242	Motor Operated Valve	R/B	13-3	PB	1yr	Mild	Mild	No (1)	M	I	

Table 3D-2 US-APWR Environmental Qualification Equipment List (Sheet 45 of 65)

Item Num	Equipment Tag	Description	Location		Purpose	Operational Duration	Environmental Conditions	Radiation Condition	Influence of Submergence for Total Integrated Dose	Qualification Process	Seismic Category	Comments
			Building	Zone	RT, ESF, PAM, Pressure Boundary (PB), Other(1)		Harsh or Mild	Harsh or Mild	Yes/No	E=Electrical M=Mechanical	I, II, Non	
100	NCS-AOV-057A	Air Operated Valve	R/B	13-3	ESF	1yr	Mild	Mild	No (1)	M	I	
101	NCS-AOV-057B	Air Operated Valve	R/B	13-3	ESF	1yr	Mild	Mild	No (1)	M	I	
102	NCS-AOV-058A	Air Operated Valve	R/B	13-3	ESF	1yr	Mild	Mild	No (1)	M	I	
103	NCS-AOV-058B	Air Operated Valve	R/B	13-3	ESF	1yr	Mild	Mild	No (1)	M	I	
104	NCS-LCV-010B	Level Control Valve	R/B	8	PB	1yr	Mild	Harsh	No (1)	M	I	
105	NCS-LCV-010D	Level Control Valve	R/B	8	PB	1yr	Mild	Harsh	No (1)	M	I	
106	NCS-MOV-146A	Motor Operated Valve	R/B	13-3	ESF	1yr	Mild	Mild	No (1)	M	I	
107	NCS-MOV-146B	Motor Operated Valve	R/B	13-3	ESF	1yr	Mild	Mild	No (1)	M	I	
108	NCS-MOV-146C	Motor Operated Valve	R/B	13-3	ESF	1yr	Mild	Mild	No (1)	M	I	
109	NCS-MOV-146D	Motor Operated Valve	R/B	13-3	ESF	1yr	Mild	Mild	No (1)	M	I	
Equipment (Spent Fuel Pit Cooling and Purification System)												
1	SFP-MPP-001A	A-Spent Fuel Pit Pump	R/B	7	ESF	1yr	Mild	Harsh	No (1)	M	I	
2	SFP-MPP-001B	B-Spent Fuel Pit Pump	R/B	7	ESF	1yr	Mild	Harsh	No (1)	M	I	
3	Deleted											
4	Deleted											
5	SFS-MOV-001A	Motor Operated Valve	R/B	7	ESF	1yr	Mild	Harsh	No (1)	M	I	
6	SFS-MOV-001B	Motor Operated Valve	R/B	7	ESF	1yr	Mild	Harsh	No (1)	M	I	
7	SFS-MOV-002A	Motor Operated Valve	R/B	7	ESF	1yr	Mild	Harsh	No (1)	M	I	
8	SFS-MOV-002B	Motor Operated Valve	R/B	7	ESF	1yr	Mild	Harsh	No (1)	M	I	
9	SFS-MOV-028	SFP Makeup Line from RWSP Isolation Valve	R/B	7	ESF	2wks	Mild	Harsh	No (1)	M	I	
10	SFS-MOV-029	SFP Makeup Line from RWSP Isolation Valve	R/B	7	ESF	2wks	Mild	Harsh	No (1)	M	I	
Equipment (Essential Service Water System)												
1	EWS-MPP-001A	A-Essential Service Water Pump	UHSRS	-	ESF	1yr	Mild	-	-	M	I	
2	EWS-MPP-001B	B-Essential Service Water Pump	UHSRS	-	ESF	1yr	Mild	-	-	M	I	
3	EWS-MPP-001C	C-Essential Service Water Pump	UHSRS	-	ESF	1yr	Mild	-	-	M	I	

Table 3D-2 US-APWR Environmental Qualification Equipment List (Sheet 46 of 65)

Item Num	Equipment Tag	Description	Location		Purpose	Operational Duration	Environmental Conditions	Radiation Condition	Influence of Submergence for Total Integrated Dose	Qualification Process	Seismic Category	Comments
			Building	Zone	RT, ESF, PAM, Pressure Boundary (PB), Other(1)		Harsh or Mild	Harsh or Mild	Yes/No	E=Electrical M=Mechanical	I, II, Non	
4	EWS-MPP-001D	D-Essential Service Water Pump	UHSRS	-	ESF	1yr	Mild	-	-	M	I	
5	EWS-SST-001A	A-Essential Service Water Pump Outlet Strainer	UHSRS	-	ESF	1yr	Mild	-	-	M	I	
6	EWS-SST-002A	A-Essential Service Water Pump Outlet Strainer	UHSRS	-	ESF	1yr	Mild	-	-	M	I	
7	EWS-SST-001B	B-Essential Service Water Pump Outlet Strainer	UHSRS	-	ESF	1yr	Mild	-	-	M	I	
8	EWS-SST-002B	B-Essential Service Water Pump Outlet Strainer	UHSRS	-	ESF	1yr	Mild	-	-	M	I	
9	EWS-SST-001C	C-Essential Service Water Pump Outlet Strainer	UHSRS	-	ESF	1yr	Mild	-	-	M	I	
10	EWS-SST-002C	C-Essential Service Water Pump Outlet Strainer	UHSRS	-	ESF	1yr	Mild	-	-	M	I	
11	EWS-SST-001D	D-Essential Service Water Pump Outlet Strainer	UHSRS	-	ESF	1yr	Mild	-	-	M	I	
12	EWS-SST-002D	D-Essential Service Water Pump Outlet Strainer	UHSRS	-	ESF	1yr	Mild	-	-	M	I	
13	Deleted											
14	Deleted											
15	Deleted											
16	Deleted											
17	EWS-MOV-503A	Motor Operated Valve	UHSRS	-	ESF	1yr	Mild	-	-	M	I	
18	EWS-MOV-503B	Motor Operated Valve	UHSRS	-	ESF	1yr	Mild	-	-	M	I	
19	EWS-MOV-503C	Motor Operated Valve	UHSRS	-	ESF	1yr	Mild	-	-	M	I	
20	EWS-MOV-503D	Motor Operated Valve	UHSRS	-	ESF	1yr	Mild	-	-	M	I	
21	EWS-MOV-573A	Motor Operated Valve	UHSRS	-	ESF	1yr	Mild	-	-	M	I	
22	EWS-MOV-573B	Motor Operated Valve	UHSRS	-	ESF	1yr	Mild	-	-	M	I	
23	EWS-MOV-573C	Motor Operated Valve	UHSRS	-	ESF	1yr	Mild	-	-	M	I	
24	EWS-MOV-573D	Motor Operated Valve	UHSRS	-	ESF	1yr	Mild	-	-	M	I	
25	EWS-MOV-574A	Motor Operated Valve	UHSRS	-	ESF	1yr	Mild	-	-	M	I	
26	EWS-MOV-574B	Motor Operated Valve	UHSRS	-	ESF	1yr	Mild	-	-	M	I	
27	EWS-MOV-574C	Motor Operated Valve	UHSRS	-	ESF	1yr	Mild	-	-	M	I	
28	EWS-MOV-574D	Motor Operated Valve	UHSRS	-	ESF	1yr	Mild	-	-	M	I	

Table 3D-2 US-APWR Environmental Qualification Equipment List (Sheet 47 of 65)

Item Num	Equipment Tag	Description	Location		Purpose	Operational Duration	Environmental Conditions	Radiation Condition	Influence of Submergence for Total Integrated Dose	Qualification Process	Seismic Category	Comments
			Building	Zone	RT, ESF, PAM, Pressure Boundary (PB), Other(1)		Harsh or Mild	Harsh or Mild	Yes/No	E=Electrical M=Mechanical	I, II, Non	
29	EWS-MOV-701A	Motor Operated Valve	UHSRS	-	ESF	1yr	Mild	-	-	M	I	
30	EWS-MOV-701B	Motor Operated Valve	UHSRS	-	ESF	1yr	Mild	-	-	M	I	
31	EWS-MOV-701C	Motor Operated Valve	UHSRS	-	ESF	1yr	Mild	-	-	M	I	
32	EWS-MOV-701D	Motor Operated Valve	UHSRS	-	ESF	1yr	Mild	-	-	M	I	
33	EWS-MOV-706A	Motor Operated Valve	UHSRS	-	PB	1yr	Mild	-	-	M	I	
34	EWS-MOV-706B	Motor Operated Valve	UHSRS	-	PB	1yr	Mild	-	-	M	I	
35	EWS-MOV-706C	Motor Operated Valve	UHSRS	-	PB	1yr	Mild	-	-	M	I	
36	EWS-MOV-706D	Motor Operated Valve	UHSRS	-	PB	1yr	Mild	-	-	M	I	
37	EWS-MOV-707A	Motor Operated Valve	UHSRS	-	PB	1yr	Mild	-	-	M	I	
38	EWS-MOV-707B	Motor Operated Valve	UHSRS	-	PB	1yr	Mild	-	-	M	I	
39	EWS-MOV-707C	Motor Operated Valve	UHSRS	-	PB	1yr	Mild	-	-	M	I	
40	EWS-MOV-707D	Motor Operated Valve	UHSRS	-	PB	1yr	Mild	-	-	M	I	
41	EWS-MOV-708A	Motor Operated Valve	UHSRS	-	PB	1yr	Mild	-	-	M	I	
42	EWS-MOV-708B	Motor Operated Valve	UHSRS	-	PB	1yr	Mild	-	-	M	I	
43	EWS-MOV-708C	Motor Operated Valve	UHSRS	-	PB	1yr	Mild	-	-	M	I	
44	EWS-MOV-708D	Motor Operated Valve	UHSRS	-	PB	1yr	Mild	-	-	M	I	
45	EWS-MOV-709A	Motor Operated Valve	UHSRS	-	PB	1yr	Mild	-	-	M	I	
46	EWS-MOV-709B	Motor Operated Valve	UHSRS	-	PB	1yr	Mild	-	-	M	I	
47	EWS-MOV-709C	Motor Operated Valve	UHSRS	-	PB	1yr	Mild	-	-	M	I	
48	EWS-MOV-709D	Motor Operated Valve	UHSRS	-	PB	1yr	Mild	-	-	M	I	
49	EWS-MOV-710A	Motor Operated Valve	UHSRS	-	ESF	1yr	Mild	-	-	M	I	
50	EWS-MOV-710B	Motor Operated Valve	UHSRS	-	ESF	1yr	Mild	-	-	M	I	
51	EWS-MOV-710C	Motor Operated Valve	UHSRS	-	ESF	1yr	Mild	-	-	M	I	
52	EWS-MOV-710D	Motor Operated Valve	UHSRS	-	ESF	1yr	Mild	-	-	M	I	
Equipment (Liquid Radioactive Waste Management System)												

Table 3D-2 US-APWR Environmental Qualification Equipment List (Sheet 48 of 65)

Item Num	Equipment Tag	Description	Location		Purpose	Operational Duration	Environmental Conditions	Radiation Condition	Influence of Submergence for Total Integrated Dose	Qualification Process	Seismic Category	Comments
			Building	Zone	RT, ESF, PAM, Pressure Boundary (PB), Other(1)		Harsh or Mild	Harsh or Mild	Yes/No	E=Electrical M=Mechanical	I, II, Non	
21	Deleted											
22	Deleted											
23	LMS-AOV-052	Air Operated Valve	PCCV	1-5	ESF	5min	Harsh	Harsh	No (1)	M	I	
24	LMS-AOV-053	Air Operated Valve	R/B	6	ESF	5min	Mild	Harsh	No (1)	M	I	
25	LMS-AOV-055	Air Operated Valve	PCCV	1-5	ESF	5min	Harsh	Harsh	No (1)	M	I	
26	LMS-AOV-056	Air Operated Valve	R/B	6	ESF	5min	Mild	Harsh	No (1)	M	I	
27	LMS-AOV-060	Air Operated Valve	R/B	6	ESF	5min	Mild	Harsh	No (1)	M	I	
28	LMS-LCV-010A	Air Operated Valve	PCCV	1-5	ESF	5min	Harsh	Harsh	No (1)	M	I	
29	LMS-LCV-010B	Air Operated Valve	R/B	6	ESF	5min	Mild	Harsh	No (1)	M	I	
30	LMS-AOV-104	Air Operated Valve	PCCV	1-5	ESF	5min	Harsh	Harsh	No (1)	M	I	
31	LMS-AOV-105	Air Operated Valve	R/B	6	ESF	5min	Mild	Harsh	No (1)	M	I	
Equipment (Solid Radioactive Waste Management System)												
1	Deleted											
2	Deleted											
3	Deleted											
4	Deleted											
5	Deleted											
6	Deleted											
Equipment (Process and Post Accident Sampling System)												
1	PSS-AOV-003	Air Operated Valve	PCCV	1-5	ESF	1yr	Harsh	Harsh	No (1)	M	I	
2	PSS-MOV-006	Motor Operated Valve	PCCV	1-5	ESF	1yr	Harsh	Harsh	No (1)	M	I	
3	PSS-MOV-013	Motor Operated Valve	PCCV	1-5	ESF	1yr	Harsh	Harsh	No (1)	M	I	
4	PSS-MOV-023	Motor Operated Valve	PCCV	1-5	ESF	1yr	Harsh	Harsh	No (1)	M	I	
5	PSS-MOV-031A	Motor Operated Valve	R/B	6	ESF	1yr	Mild	Harsh	No (1)	M	I	
6	PSS-MOV-031B	Motor Operated Valve	R/B	6	ESF	1yr	Mild	Harsh	No (1)	M	I	

Table 3D-2 US-APWR Environmental Qualification Equipment List (Sheet 49 of 65)

Item Num	Equipment Tag	Description	Location		Purpose	Operational Duration	Environmental Conditions	Radiation Condition	Influence of Submergence for Total Integrated Dose	Qualification Process	Seismic Category	Comments
			Building	Zone	RT, ESF, PAM, Pressure Boundary (PB), Other(1)		Harsh or Mild	Harsh or Mild	Yes/No	E=Electrical M=Mechanical	I, II, Non	
7	PSS -MOV-052A	Motor Operated Valve	R/B	13-2	Other	1yr	Mild	Harsh	No (1)	M	I	
8	PSS -MOV-052B	Motor Operated Valve	R/B	13-2	Other	1yr	Mild	Harsh	No (1)	M	I	
9	PSS -MOV-052C	Motor Operated Valve	R/B	13-2	Other	1yr	Mild	Harsh	No (1)	M	I	
10	PSS -MOV-052D	Motor Operated Valve	R/B	13-2	Other	1yr	Mild	Harsh	No (1)	M	I	
11	PSS-AOV-062A	Air Operated Valve	PCCV	1-5	ESF	1yr	Harsh	Harsh	No (1)	M	I	
12	PSS-AOV-062B	Air Operated Valve	PCCV	1-5	ESF	1yr	Harsh	Harsh	No (1)	M	I	
13	PSS-AOV-062C	Air Operated Valve	PCCV	1-5	ESF	1yr	Harsh	Harsh	No (1)	M	I	
14	PSS-AOV-062D	Air Operated Valve	PCCV	1-5	ESF	1yr	Harsh	Harsh	No (1)	M	I	
15	PSS-AOV-063	Air Operated Valve	R/B	6	ESF	1yr	Mild	Harsh	No (1)	M	I	
16	PSS-MOV-071	Motor Operated Valve	R/B	6	ESF	1yr	Mild	Harsh	No (1)	M	I	
17	Deleted											
18	Deleted											
Equipment (Steam Generator Blowdown System)												
1	SGS-AOV-001A	Air Operated Valve	R/B	10	ESF	5min	Harsh	Harsh	No (1)	M	I	
2	SGS-AOV-001B	Air Operated Valve	R/B	10	ESF	5min	Harsh	Harsh	No (1)	M	I	
3	SGS-AOV-001C	Air Operated Valve	R/B	10	ESF	5min	Harsh	Harsh	No (1)	M	I	
4	SGS-AOV-001D	Air Operated Valve	R/B	10	ESF	5min	Harsh	Harsh	No (1)	M	I	
5	SGS-AOV-031A	Air Operated Valve	R/B	6	ESF	5min	Mild	Harsh	No (1)	M	I	
6	SGS-AOV-031B	Air Operated Valve	R/B	6	ESF	5min	Mild	Harsh	No (1)	M	I	
7	SGS-AOV-031C	Air Operated Valve	R/B	6	ESF	5min	Mild	Harsh	No (1)	M	I	
8	SGS-AOV-031D	Air Operated Valve	R/B	6	ESF	5min	Mild	Harsh	No (1)	M	I	
9	SGV-AOV-002A	Air Operated Valve	R/B	10	ESF	5min	Harsh	Harsh	No (1)	M	I	
10	SGV-AOV-002B	Air Operated Valve	R/B	10	ESF	5min	Harsh	Harsh	No (1)	M	I	
11	SGV-AOV-002C	Air Operated Valve	R/B	10	ESF	5min	Harsh	Harsh	No (1)	M	I	
12	SGV-AOV-002D	Air Operated Valve	R/B	10	ESF	5min	Harsh	Harsh	No (1)	M	I	

Table 3D-2 US-APWR Environmental Qualification Equipment List (Sheet 50 of 65)

Item Num	Equipment Tag	Description	Location		Purpose	Operational Duration	Environmental Conditions	Radiation Condition	Influence of Submergence for Total Integrated Dose	Qualification Process	Seismic Category	Comments
			Building	Zone	RT, ESF, PAM, Pressure Boundary (PB), Other(1)		Harsh or Mild	Harsh or Mild	Yes/No	E=Electrical M=Mechanical	I, II, Non	
Equipment (Refueling Water Storage System)												
1	Deleted											
2	RWS-MOV-002	Motor Operated Valve	PCCV	1-5	ESF	5min	Harsh	Harsh	No (1)	M	I	
3	RWS-MOV-004	Motor Operated Valve	R/B	6	ESF	5min	Mild	Harsh	No (1)	M	I	
4	RWS-AOV-022	Air Operated Valve	R/B	6	ESF	5min	Mild	Harsh	No (1)	M	I	
5	RWS-RRP-001A	A-Refueling Water Recirculation Pump	R/B	7	ESF	1yr	Mild	Harsh	No (1)	M	I	
6	RWS-RRP-001B	B-Refueling Water Recirculation Pump	R/B	7	ESF	1yr	Mild	Harsh	No (1)	M	I	
Equipment (Instrument Air Supply System)												
1	IAS-MOV-002	Motor Operated Valve	R/B	6	ESF	5min	Mild	Harsh	No (1)	M	I	
Equipment (Fire Protection Water Supply System)												
1	FSS-AOV-001	Air Operated Valve	R/B	6	ESF	5min	Mild	Harsh	No (1)	M	I	
2	FSS-MOV-004	Motor Operated Valve	R/B	6	Other	1yr	Mild	Harsh	No (1)	M	I	
Equipment (Plant Radiation Monitoring System)												
1	RMS-MOV-001	Motor Operated Valve	PCCV	1-5	ESF	1yr	Harsh	Harsh	No (1)	M	I	
2	RMS-MOV-002	Motor Operated Valve	R/B	6	ESF	1yr	Mild	Harsh	No (1)	M	I	
3	RMS-MOV-003	Motor Operated Valve	R/B	6	ESF	1yr	Mild	Harsh	No (1)	M	I	
Equipment (Main Control Room HVAC System)												
1	VRS-MAH-101A	A-Main Control Room Air Handling Unit	R/B	8	ESF	1yr	Mild	Harsh	No (1)	M	I	
2	VRS-MAH-101B	B-Main Control Room Air Handling Unit	R/B	8	ESF	1yr	Mild	Harsh	No (1)	M	I	
3	VRS-MAH-101C	C-Main Control Room Air Handling Unit	R/B	8	ESF	1yr	Mild	Harsh	No (1)	M	I	
4	VRS-MAH-101D	D-Main Control Room Air Handling Unit	R/B	8	ESF	1yr	Mild	Harsh	No (1)	M	I	
5	VRS-MFN-101A	A-Main Control Room Air Handling Unit Fan	R/B	8	ESF	1yr	Mild	Harsh	No (1)	M	I	
6	VRS-MFN-101B	B-Main Control Room Air Handling Unit Fan	R/B	8	ESF	1yr	Mild	Harsh	No (1)	M	I	
7	VRS-MFN-101C	C-Main Control Room Air Handling Unit Fan	R/B	8	ESF	1yr	Mild	Harsh	No (1)	M	I	
8	VRS-MFN-101D	D-Main Control Room Air Handling Unit Fan	R/B	8	ESF	1yr	Mild	Harsh	No (1)	M	I	

Table 3D-2 US-APWR Environmental Qualification Equipment List (Sheet 51 of 65)

Item Num	Equipment Tag	Description	Location		Purpose	Operational Duration	Environmental Conditions	Radiation Condition	Influence of Submergence for Total Integrated Dose	Qualification Process	Seismic Category	Comments
			Building	Zone	RT, ESF, PAM, Pressure Boundary (PB), Other(1)		Harsh or Mild	Harsh or Mild	Yes/No	E=Electrical M=Mechanical	I, II, Non	
9	Deleted											
10	Deleted											
11	Deleted											
12	Deleted											
13	VRS-MEH-101A	A-Main Control Room Air Handling Unit Electric Heating Coil	R/B	8	ESF	1yr	Mild	Harsh	No (1)	M	I	
14	VRS-MEH-101B	B-Main Control Room Air Handling Unit Electric Heating Coil	R/B	8	ESF	1yr	Mild	Harsh	No (1)	M	I	
15	VRS-MEH-101C	C-Main Control Room Air Handling Unit Electric Heating Coil	R/B	8	ESF	1yr	Mild	Harsh	No (1)	M	I	
16	VRS-MEH-101D	D-Main Control Room Air Handling Unit Electric Heating Coil	R/B	8	ESF	1yr	Mild	Harsh	No (1)	M	I	
17	VRS-MFU-111A	A-Main Control Room Emergency Filtration Unit	R/B	8	ESF	1yr	Mild	Harsh	No (1)	M	I	
18	VRS-MFU-111B	B-Main Control Room Emergency Filtration Unit	R/B	8	ESF	1yr	Mild	Harsh	No (1)	M	I	
19	VRS-MFN-111A	A-Main Control Room Emergency Filtration Unit Fan	R/B	8	ESF	1yr	Mild	Harsh	No (1)	M	I	
20	VRS-MFN-111B	B-Main Control Room Emergency Filtration Unit Fan	R/B	8	ESF	1yr	Mild	Harsh	No (1)	M	I	
21	VRS-MEH-111A	A-Main Control Room Emergency Filtration Unit Electric Heating Coil	R/B	8	ESF	1yr	Mild	Harsh	No (1)	M	I	
22	VRS-MEH-111B	B-Main Control Room Emergency Filtration Unit Electric Heating Coil	R/B	8	ESF	1yr	Mild	Harsh	No (1)	M	I	
23	VRS-EHD-101A	Electro Hydraulic Operated Damper	R/B	14	ESF	1yr	Mild	Mild	No (1)	M	I	
24	VRS-EHD-101B	Electro Hydraulic Operated Damper	R/B	14	ESF	1yr	Mild	Mild	No (1)	M	I	
25	VRS-EHD-102A	Electro Hydraulic Operated Damper	R/B	14	ESF	1yr	Mild	Mild	No (1)	M	I	
26	VRS-EHD-102B	Electro Hydraulic Operated Damper	R/B	14	ESF	1yr	Mild	Mild	No (1)	M	I	
27	VRS-AOD-103A	Air Operated Damper	R/B	8	ESF	5min	Mild	Mild	No (1)	M	I	
28	VRS-AOD-103B	Air Operated Damper	R/B	8	ESF	5min	Mild	Mild	No (1)	M	I	
29	VRS-EHD-104A	Electro Hydraulic Operated Damper	R/B	8	ESF	1yr	Mild	Harsh	No (1)	M	I	
30	VRS-EHD-104B	Electro Hydraulic Operated Damper	R/B	8	ESF	1yr	Mild	Harsh	No (1)	M	I	

Table 3D-2 US-APWR Environmental Qualification Equipment List (Sheet 52 of 65)

Item Num	Equipment Tag	Description	Location		Purpose	Operational Duration	Environmental Conditions	Radiation Condition	Influence of Submergence for Total Integrated Dose	Qualification Process	Seismic Category	Comments
			Building	Zone	RT, ESF, PAM, Pressure Boundary (PB), Other(1)		Harsh or Mild	Harsh or Mild	Yes/No	E=Electrical M=Mechanical	I, II, Non	
31	VRS-EHD-105A	Electro Hydraulic Operated Damper	R/B	8	ESF	1yr	Mild	Harsh	No (1)	M	I	
32	VRS-EHD-105B	Electro Hydraulic Operated Damper	R/B	8	ESF	1yr	Mild	Harsh	No (1)	M	I	
33	VRS-EHD-105C	Electro Hydraulic Operated Damper	R/B	8	ESF	1yr	Mild	Harsh	No (1)	M	I	
34	VRS-EHD-105D	Electro Hydraulic Operated Damper	R/B	8	ESF	1yr	Mild	Harsh	No (1)	M	I	
35	VRS-EHD-106A	Electro Hydraulic Operated Damper	R/B	8	ESF	1yr	Mild	Harsh	No (1)	M	I	
36	VRS-EHD-106B	Electro Hydraulic Operated Damper	R/B	8	ESF	1yr	Mild	Harsh	No (1)	M	I	
37	VRS-EHD-106C	Electro Hydraulic Operated Damper	R/B	8	ESF	1yr	Mild	Harsh	No (1)	M	I	
38	VRS-EHD-106D	Electro HydraulicOperated Damper	R/B	8	ESF	1yr	Mild	Harsh	No (1)	M	I	
39	VRS-EHD-107A	Electro Hydraulic Operated Damper	R/B	8	ESF	1yr	Mild	Harsh	No (1)	M	I	
40	VRS-EHD-107B	Electro Hydraulic Operated Damper	R/B	8	ESF	1yr	Mild	Harsh	No (1)	M	I	
41	VRS-MOD-111A	Motor Operated Damper	R/B	8	ESF	1yr	Mild	Harsh	No (1)	M	I	
42	VRS-MOD-111B	Motor Operated Damper	R/B	8	ESF	1yr	Mild	Harsh	No (1)	M	I	
43	VRS-MOD-112A	Motor Operated Damper	R/B	8	ESF	1yr	Mild	Harsh	No (1)	M	I	
44	VRS-MOD-112B	Motor Operated Damper	R/B	8	ESF	1yr	Mild	Harsh	No (1)	M	I	
45	VRS-MOD-113A	Motor Operated Damper	R/B	8	ESF	1yr	Mild	Harsh	No (1)	M	I	
46	VRS-MOD-113B	Motor Operated Damper	R/B	8	ESF	1yr	Mild	Harsh	No (1)	M	I	
47	VRS-AOD-121	Air Operated Damper	R/B	2	ESF	5min	Mild	Mild	No (1)	M	I	
48	VRS-AOD-122	Air Operated Damper	R/B	8	ESF	5min	Mild	Mild	No (1)	M	I	
49	VRS-AOD-131	Air Operated Damper	R/B	2	ESF	5min	Mild	Mild	No (1)	M	I	
50	VRS-AOD-132	Air Operated Damper	R/B	8	ESF	5min	Mild	Mild	No (1)	M	I	
Equipment (Engineered Safety Features Ventilation System)												
1	VRS-MFU-001A	A-Annulus Emergency Exhaust Filtration Unit	R/B	7	ESF	1yr	Mild	Harsh	No (1)	M	I	
2	VRS-MFU-001B	B-Annulus Emergency Exhaust Filtration Unit	R/B	7	ESF	1yr	Mild	Harsh	No (1)	M	I	
3	VRS-MFN-001A	A-Annulus Emergency Exhaust Filtration Unit Fan	R/B	7	ESF	1yr	Mild	Harsh	No (1)	M	I	
4	VRS-MFN-001B	B-Annulus Emergency Exhaust Filtration Unit Fan	R/B	7	ESF	1yr	Mild	Harsh	No (1)	M	I	

Table 3D-2 US-APWR Environmental Qualification Equipment List (Sheet 53 of 65)

Item Num	Equipment Tag	Description	Location		Purpose	Operational Duration	Environmental Conditions	Radiation Condition	Influence of Submergence for Total Integrated Dose	Qualification Process	Seismic Category	Comments
			Building	Zone	RT, ESF, PAM, Pressure Boundary (PB), Other(1)		Harsh or Mild	Harsh or Mild	Yes/No	E=Electrical M=Mechanical	I, II, Non	
5	VRS-EHD-001A	Electro Hydraulic Operated Damper	R/B	7	ESF	1yr	Mild	Harsh	No (1)	M	I	
6	VRS-EHD-001B	Electro Hydraulic Operated Damper	R/B	7	ESF	1yr	Mild	Harsh	No (1)	M	I	
7	VRS-EHD-002A	Electro Hydraulic Operated Damper	R/B	7	ESF	1yr	Mild	Harsh	No (1)	M	I	
8	VRS-EHD-002B	Electro Hydraulic Operated Damper	R/B	7	ESF	1yr	Mild	Harsh	No (1)	M	I	
9	VRS-EHD-003A	Electro Hydraulic Operated Damper	R/B	7	ESF	1yr	Mild	Harsh	No (1)	M	I	
10	VRS-EHD-003B	Electro Hydraulic Operated Damper	R/B	7	ESF	1yr	Mild	Harsh	No (1)	M	I	
11	VRS-MAH-201A	A-Class 1E Electrical Room Air Handling Unit	R/B	8	ESF	1yr	Mild	Harsh	No (1)	M	I	
12	VRS-MAH-201B	B-Class 1E Electrical Room Air Handling Unit	R/B	8	ESF	1yr	Mild	Harsh	No (1)	M	I	
13	VRS-MAH-201C	C-Class 1E Electrical Room Air Handling Unit	R/B	8	ESF	1yr	Mild	Harsh	No (1)	M	I	
14	VRS-MAH-201D	D-Class 1E Electrical Room Air Handling Unit	R/B	8	ESF	1yr	Mild	Harsh	No (1)	M	I	
15	VRS-MFN-201A	A-Class 1E Electrical Room Air Handling Unit Fan	R/B	8	ESF	1yr	Mild	Harsh	No (1)	M	I	
16	VRS-MFN-201B	B-Class 1E Electrical Room Air Handling Unit Fan	R/B	8	ESF	1yr	Mild	Harsh	No (1)	M	I	
17	VRS-MFN-201C	C-Class 1E Electrical Room Air Handling Unit Fan	R/B	8	ESF	1yr	Mild	Harsh	No (1)	M	I	
18	VRS-MFN-201D	D-Class 1E Electrical Room Air Handling Unit Fan	R/B	8	ESF	1yr	Mild	Harsh	No (1)	M	I	
19	VRS-MFN-202A	A-Class 1E Electrical Room Return Air Fan	R/B	8	ESF	1yr	Mild	Harsh	No (1)	M	I	
20	VRS-MFN-202B	B-Class 1E Electrical Room Return Air Fan	R/B	8	ESF	1yr	Mild	Harsh	No (1)	M	I	
21	VRS-MFN-202C	C-Class 1E Electrical Room Return Air Fan	R/B	8	ESF	1yr	Mild	Harsh	No (1)	M	I	
22	VRS-MFN-202D	D-Class 1E Electrical Room Return Air Fan	R/B	8	ESF	1yr	Mild	Harsh	No (1)	M	I	
23	Deleted											
24	Deleted											
25	Deleted											
26	Deleted											
27	VRS-MEH-201A	A-Class 1E Electrical Room Air Handling Unit Electric Heating Coil	R/B	8	ESF	1yr	Mild	Harsh	No (1)	M	I	
28	VRS-MEH-201B	B-Class 1E Electrical Room Air Handling Unit Electric Heating Coil	R/B	8	ESF	1yr	Mild	Harsh	No (1)	M	I	

Table 3D-2 US-APWR Environmental Qualification Equipment List (Sheet 54 of 65)

Item Num	Equipment Tag	Description	Location		Purpose	Operational Duration	Environmental Conditions	Radiation Condition	Influence of Submergence for Total Integrated Dose	Qualification Process	Seismic Category	Comments
			Building	Zone	RT, ESF, PAM, Pressure Boundary (PB), Other(1)		Harsh or Mild	Harsh or Mild	Yes/No	E=Electrical M=Mechanical	I, II, Non	
29	VRS-MEH-201C	C-Class 1E Electrical Room Air Handling Unit Electric Heating Coil	R/B	8	ESF	1yr	Mild	Harsh	No (1)	M	I	
30	VRS-MEH-201D	D-Class 1E Electrical Room Air Handling Unit Electric Heating Coil	R/B	8	ESF	1yr	Mild	Harsh	No (1)	M	I	
31	VRS-MEH-202A	A-Class 1E I&C Room In-Duct Heater	R/B	8	ESF	1yr	Mild	Harsh	No (1)	M	I	
32	VRS-MEH-202B	B-Class 1E I&C Room In-Duct Heater	R/B	8	ESF	1yr	Mild	Harsh	No (1)	M	I	
33	VRS-MEH-202C	C-Class 1E I&C Room In-Duct Heater	R/B	8	ESF	1yr	Mild	Harsh	No (1)	M	I	
34	VRS-MEH-202D	D-Class 1E I&C Room In-Duct Heater	R/B	8	ESF	1yr	Mild	Harsh	No (1)	M	I	
35	VRS-MEH-203A	A-Class 1E Electrical Room MCR HVAC Equipment Room In-Duct Heater	R/B	8	ESF	1yr	Mild	Harsh	No (1)	M	I	
36	VRS-MEH-203B	B-Class 1E Electrical Room MCR HVAC Equipment Room In-Duct Heater	R/B	8	ESF	1yr	Mild	Harsh	No (1)	M	I	
37	VRS-MEH-203C	C-Class 1E Electrical Room MCR HVAC Equipment Room In-Duct Heater	R/B	8	ESF	1yr	Mild	Harsh	No (1)	M	I	
38	VRS-MEH-203D	D-Class 1E Electrical Room MCR HVAC Equipment Room In-Duct Heater	R/B	8	ESF	1yr	Mild	Harsh	No (1)	M	I	
39	VRS-MEH-211A	A-Remote Shutdown Console Room In-Duct Heater	R/B	8	ESF	1yr	Mild	Harsh	No (1)	M	I	
40	VRS-MEH-211B	B-Remote Shutdown Console Room In-Duct Heater	R/B	8	ESF	1yr	Mild	Harsh	No (1)	M	I	
41	VRS-MEH-204A	A-Class 1E Battery Room In-Duct Heater	R/B	8	ESF	1yr	Mild	Harsh	No (1)	M	I	
42	VRS-MEH-204B	B-Class 1E Battery Room In-Duct Heater	R/B	8	ESF	1yr	Mild	Harsh	No (1)	M	I	
43	VRS-MEH-204C	C-Class 1E Battery Room In-Duct Heater	R/B	8	ESF	1yr	Mild	Harsh	No (1)	M	I	
44	VRS-MEH-204D	D-Class 1E Battery Room In-Duct Heater	R/B	8	ESF	1yr	Mild	Harsh	No (1)	M	I	
45	VRS-EHD-201A	Electro Hydraulic Operated Damper	R/B	8	ESF	1yr	Mild	Harsh	No (1)	M	I	
46	VRS-EHD-201B	Electro Hydraulic Operated Damper	R/B	8	ESF	1yr	Mild	Harsh	No (1)	M	I	
47	VRS-EHD-201C	Electro Hydraulic Operated Damper	R/B	8	ESF	1yr	Mild	Harsh	No (1)	M	I	
48	VRS-EHD-201D	Electro Hydraulic Operated Damper	R/B	8	ESF	1yr	Mild	Harsh	No (1)	M	I	
49	VRS-EHD-202A	Electro Hydraulic Operated Damper	R/B	8	ESF	1yr	Mild	Harsh	No (1)	M	I	
50	VRS-EHD-202B	Electro Hydraulic Operated Damper	R/B	8	ESF	1yr	Mild	Harsh	No (1)	M	I	

Table 3D-2 US-APWR Environmental Qualification Equipment List (Sheet 55 of 65)

Item Num	Equipment Tag	Description	Location		Purpose	Operational Duration	Environmental Conditions	Radiation Condition	Influence of Submergence for Total Integrated Dose	Qualification Process	Seismic Category	Comments
			Building	Zone	RT, ESF, PAM, Pressure Boundary (PB), Other(1)		Harsh or Mild	Harsh or Mild	Yes/No	E=Electrical M=Mechanical	I, II, Non	
51	VRS-EHD-202C	Electro Hydraulic Operated Damper	R/B	8	ESF	1yr	Mild	Harsh	No (1)	M	I	
52	VRS-EHD-202D	Electro Hydraulic Operated Damper	R/B	8	ESF	1yr	Mild	Harsh	No (1)	M	I	
53	VRS-EHD-203A	Electro Hydraulic Operated Damper	R/B	8	ESF	1yr	Mild	Harsh	No (1)	M	I	
54	VRS-EHD-203B	Electro Hydraulic Operated Damper	R/B	8	ESF	1yr	Mild	Harsh	No (1)	M	I	
55	VRS-EHD-203C	Electro Hydraulic Operated Damper	R/B	8	ESF	1yr	Mild	Harsh	No (1)	M	I	
56	VRS-EHD-203D	Electro Hydraulic Operated Damper	R/B	8	ESF	1yr	Mild	Harsh	No (1)	M	I	
57	VRS-EHD-204A	Electro Hydraulic Operated Damper	R/B	8	ESF	1yr	Mild	Harsh	No (1)	M	I	
58	VRS-EHD-204B	Electro Hydraulic Operated Damper	R/B	8	ESF	1yr	Mild	Harsh	No (1)	M	I	
59	VRS-EHD-204C	Electro Hydraulic Operated Damper	R/B	8	ESF	1yr	Mild	Harsh	No (1)	M	I	
60	VRS-EHD-204D	Electro Hydraulic Operated Damper	R/B	8	ESF	1yr	Mild	Harsh	No (1)	M	I	
61	VRS-AOD-205A	Air Operated Damper	R/B	8	ESF	5min	Mild	Mild	No (1)	M	I	
62	VRS-AOD-205B	Air Operated Damper	R/B	8	ESF	5min	Mild	Mild	No (1)	M	I	
63	VRS-AOD-205C	Air Operated Damper	R/B	8	ESF	5min	Mild	Mild	No (1)	M	I	
64	VRS-AOD-205D	Air Operated Damper	R/B	8	ESF	5min	Mild	Mild	No (1)	M	I	
65	VRS-MFN-251A	A-Class 1E Battery Room Exhaust Fan	PS/B	11	ESF	1yr	Mild	Mild	No (1)	M	I	
66	VRS-MFN-251B	B-Class 1E Battery Room Exhaust Fan	PS/B	11	ESF	1yr	Mild	Mild	No (1)	M	I	
67	VRS-MFN-251C	C-Class 1E Battery Room Exhaust Fan	PS/B	11	ESF	1yr	Mild	Mild	No (1)	M	I	
68	VRS-MFN-251D	D-Class 1E Battery Room Exhaust Fan	PS/B	11	ESF	1yr	Mild	Mild	No (1)	M	I	
69	VRS-EHD-251A	Electro Hydraulic Operated Damper	PS/B	11	ESF	1yr	Mild	Mild	No (1)	M	I	
70	VRS-EHD-251B	Electro Hydraulic Operated Damper	PS/B	11	ESF	1yr	Mild	Mild	No (1)	M	I	
71	VRS-EHD-251C	Electro Hydraulic Operated Damper	PS/B	11	ESF	1yr	Mild	Mild	No (1)	M	I	
72	VRS-EHD-251D	Electro Hydraulic Operated Damper	PS/B	11	ESF	1yr	Mild	Mild	No (1)	M	I	
73	VRS-EHD-252A	Electro Hydraulic Operated Damper	PS/B	11	ESF	1yr	Mild	Mild	No (1)	M	I	
74	VRS-EHD-252B	Electro Hydraulic Operated Damper	PS/B	11	ESF	1yr	Mild	Mild	No (1)	M	I	
75	VRS-EHD-252C	Electro Hydraulic Operated Damper	PS/B	11	ESF	1yr	Mild	Mild	No (1)	M	I	

Table 3D-2 US-APWR Environmental Qualification Equipment List (Sheet 56 of 65)

Item Num	Equipment Tag	Description	Location		Purpose	Operational Duration	Environmental Conditions	Radiation Condition	Influence of Submergence for Total Integrated Dose	Qualification Process	Seismic Category	Comments
			Building	Zone	RT, ESF, PAM, Pressure Boundary (PB), Other(1)		Harsh or Mild	Harsh or Mild	Yes/No	E=Electrical M=Mechanical	I, II, Non	
76	VRS-EHD-252D	Electro Hydraulic Operated Damper	PS/B	11	ESF	1yr	Mild	Mild	No (1)	M	I	
77	VRS-MAH-301A	A-Safeguard Component Area Air Handling Unit	R/B	6	ESF	1yr	Mild	Harsh	No (1)	M	I	
78	VRS-MAH-301B	B-Safeguard Component Area Air Handling Unit	R/B	6	ESF	1yr	Mild	Harsh	No (1)	M	I	
79	VRS-MAH-301C	C-Safeguard Component Area Air Handling Unit	R/B	6	ESF	1yr	Mild	Harsh	No (1)	M	I	
80	VRS-MAH-301D	D-Safeguard Component Area Air Handling Unit	R/B	6	ESF	1yr	Mild	Harsh	No (1)	M	I	
81	VRS-MFN-301A	A-Safeguard Component Area Air Handling Unit Fan	R/B	6	ESF	1yr	Mild	Harsh	No (1)	M	I	
82	VRS-MFN-301B	B-Safeguard Component Area Air Handling Unit Fan	R/B	6	ESF	1yr	Mild	Harsh	No (1)	M	I	
83	VRS-MFN-301C	C-Safeguard Component Area Air Handling Unit Fan	R/B	6	ESF	1yr	Mild	Harsh	No (1)	M	I	
84	VRS-MFN-301D	D-Safeguard Component Area Air Handling Unit Fan	R/B	6	ESF	1yr	Mild	Harsh	No (1)	M	I	
85	Deleted											
86	Deleted											
87	Deleted											
88	Deleted											
89	VRS-MEH-301A	A-Safeguard Component Area Air Handling Unit Electric Heating Coil	R/B	6	ESF	1yr	Mild	Harsh	No (1)	M	I	
90	VRS-MEH-301B	B-Safeguard Component Area Air Handling Unit Electric Heating Coil	R/B	6	ESF	1yr	Mild	Harsh	No (1)	M	I	
91	VRS-MEH-301C	C-Safeguard Component Area Air Handling Unit Electric Heating Coil	R/B	6	ESF	1yr	Mild	Harsh	No (1)	M	I	
92	VRS-MEH-301D	D-Safeguard Component Area Air Handling Unit Electric Heating Coil	R/B	6	ESF	1yr	Mild	Harsh	No (1)	M	I	
93	VRS-MOD-301A	Motor Operated Damper	R/B	6	ESF	1yr	Mild	Harsh	No (1)	M	I	
94	VRS-MOD-301B	Motor Operated Damper	R/B	6	ESF	1yr	Mild	Harsh	No (1)	M	I	
95	VRS-MOD-301C	Motor Operated Damper	R/B	6	ESF	1yr	Mild	Harsh	No (1)	M	I	
96	VRS-MOD-301D	Motor Operated Damper	R/B	6	ESF	1yr	Mild	Harsh	No (1)	M	I	
97	VRS-MOD-302A	Motor Operated Damper	R/B	6	ESF	1yr	Mild	Harsh	No (1)	M	I	
98	VRS-MOD-302B	Motor Operated Damper	R/B	6	ESF	1yr	Mild	Harsh	No (1)	M	I	

Table 3D-2 US-APWR Environmental Qualification Equipment List (Sheet 57 of 65)

Item Num	Equipment Tag	Description	Location		Purpose	Operational Duration	Environmental Conditions	Radiation Condition	Influence of Submergence for Total Integrated Dose	Qualification Process	Seismic Category	Comments
			Building	Zone	RT, ESF, PAM, Pressure Boundary (PB), Other(1)		Harsh or Mild	Harsh or Mild	Yes/No	E=Electrical M=Mechanical	I, II, Non	
99	VRS-MOD-302C	Motor Operated Damper	R/B	6	ESF	1yr	Mild	Harsh	No (1)	M	I	
100	VRS-MOD-302D	Motor Operated Damper	R/B	6	ESF	1yr	Mild	Harsh	No (1)	M	I	
101	VRS-MAH-401A	A-Emergency Feedwater Pump Area Air Handling Unit	R/B	8	ESF	1yr	Mild	Harsh	No (1)	M	I	
102	VRS-MAH-401B	B-Emergency Feedwater Pump Area Air Handling Unit	R/B	8	ESF	1yr	Mild	Harsh	No (1)	M	I	
103	VRS-MAH-401C	C-Emergency Feedwater Pump Area Air Handling Unit	R/B	8	ESF	1yr	Mild	Harsh	No (1)	M	I	
104	VRS-MAH-401D	D-Emergency Feedwater Pump Area Air Handling Unit	R/B	8	ESF	1yr	Mild	Harsh	No (1)	M	I	
105	VRS-MFN-401A	A-Emergency Feedwater Pump Area Air Handling Unit Fan	R/B	8	ESF	1yr	Mild	Harsh	No (1)	M	I	
106	VRS-MFN-401B	B-Emergency Feedwater Pump Area Air Handling Unit Fan	R/B	8	ESF	1yr	Mild	Harsh	No (1)	M	I	
107	VRS-MFN-401C	C-Emergency Feedwater Pump Area Air Handling Unit Fan	R/B	8	ESF	1yr	Mild	Harsh	No (1)	M	I	
108	VRS-MFN-401D	D-Emergency Feedwater Pump Area Air Handling Unit Fan	R/B	8	ESF	1yr	Mild	Harsh	No (1)	M	I	
109	Deleted											
110	Deleted											
111	Deleted											
112	Deleted											
113	VRS-MEH-401A	A-Emergency Feedwater Pump Area Air Handling Unit Electric Heating Coil	R/B	8	ESF	1yr	Mild	Harsh	No (1)	M	I	
114	VRS-MEH-401B	B-Emergency Feedwater Pump Area Air Handling Unit Electric Heating Coil	R/B	8	ESF	1yr	Mild	Harsh	No (1)	M	I	
115	VRS-MEH-401C	C-Emergency Feedwater Pump Area Air Handling Unit Electric Heating Coil	R/B	8	ESF	1yr	Mild	Harsh	No (1)	M	I	
116	VRS-MEH-401D	D-Emergency Feedwater Pump Area Air Handling Unit Electric Heating Coil	R/B	8	ESF	1yr	Mild	Harsh	No (1)	M	I	

Table 3D-2 US-APWR Environmental Qualification Equipment List (Sheet 58 of 65)

Item Num	Equipment Tag	Description	Location		Purpose	Operational Duration	Environmental Conditions	Radiation Condition	Influence of Submergence for Total Integrated Dose	Qualification Process	Seismic Category	Comments
			Building	Zone	RT, ESF, PAM, Pressure Boundary (PB), Other(1)		Harsh or Mild	Harsh or Mild	Yes/No	E=Electrical M=Mechanical	I, II, Non	
117	VRS-MAH-501A	A-Component Cooling Water Pump Area Air Handling Unit	R/B	8	ESF	1yr	Mild	Harsh	No (1)	M	I	
118	VRS-MAH-501B	B-Component Cooling Water Pump Area Air Handling Unit	R/B	8	ESF	1yr	Mild	Harsh	No (1)	M	I	
119	VRS-MAH-501C	C-Component Cooling Water Pump Area Air Handling Unit	R/B	8	ESF	1yr	Mild	Harsh	No (1)	M	I	
120	VRS-MAH-501D	D-Component Cooling Water Pump Area Air Handling Unit	R/B	8	ESF	1yr	Mild	Harsh	No (1)	M	I	
121	VRS-MFN-501A	A-Component Cooling Water Pump Area Air Handling Unit Fan	R/B	8	ESF	1yr	Mild	Harsh	No (1)	M	I	
122	VRS-MFN-501B	B-Component Cooling Water Pump Area Air Handling Unit Fan	R/B	8	ESF	1yr	Mild	Harsh	No (1)	M	I	
123	VRS-MFN-501C	C-Component Cooling Water Pump Area Air Handling Unit Fan	R/B	8	ESF	1yr	Mild	Harsh	No (1)	M	I	
124	VRS-MFN-501D	D-Component Cooling Water Pump Area Air Handling Unit Fan	R/B	8	ESF	1yr	Mild	Harsh	No (1)	M	I	
125	Deleted											
126	Deleted											
127	Deleted											
128	Deleted											
129	VRS-MEH-501A	A-Component Cooling Water Pump Area Air Handling Unit Electric Heating Coil	R/B	8	ESF	1yr	Mild	Harsh	No (1)	M	I	
130	VRS-MEH-501B	B-Component Cooling Water Pump Area Air Handling Unit Electric Heating Coil	R/B	8	ESF	1yr	Mild	Harsh	No (1)	M	I	
131	VRS-MEH-501C	C-Component Cooling Water Pump Area Air Handling Unit Electric Heating Coil	R/B	8	ESF	1yr	Mild	Harsh	No (1)	M	I	
132	VRS-MEH-501D	D-Component Cooling Water Pump Area Air Handling Unit Electric Heating Coil	R/B	8	ESF	1yr	Mild	Harsh	No (1)	M	I	
133	VRS-MAH-511A	A-Essential Chiller Unit Area Air Handling Unit	PS/B	9	ESF	1yr	Mild	Mild	No (1)	M	I	
134	VRS-MAH-511B	B-Essential Chiller Unit Area Air Handling Unit	PS/B	9	ESF	1yr	Mild	Mild	No (1)	M	I	
135	VRS-MAH-511C	C-Essential Chiller Unit Area Air Handling Unit	PS/B	9	ESF	1yr	Mild	Mild	No (1)	M	I	

Table 3D-2 US-APWR Environmental Qualification Equipment List (Sheet 59 of 65)

Item Num	Equipment Tag	Description	Location		Purpose	Operational Duration	Environmental Conditions	Radiation Condition	Influence of Submergence for Total Integrated Dose	Qualification Process	Seismic Category	Comments
			Building	Zone	RT, ESF, PAM, Pressure Boundary (PB), Other(1)		Harsh or Mild	Harsh or Mild	Yes/No	E=Electrical M=Mechanical	I, II, Non	
136	VRS-MAH-511D	D-Essential Chiller Unit Area Air Handling Unit	PS/B	9	ESF	1yr	Mild	Mild	No (1)	M	I	
137	VRS-MFN-511A	A-Essential Chiller Unit Area Air Handling Unit Fan	PS/B	9	ESF	1yr	Mild	Mild	No (1)	M	I	
138	VRS-MFN-511B	B-Essential Chiller Unit Area Air Handling Unit Fan	PS/B	9	ESF	1yr	Mild	Mild	No (1)	M	I	
139	VRS-MFN-511C	C-Essential Chiller Unit Area Air Handling Unit Fan	PS/B	9	ESF	1yr	Mild	Mild	No (1)	M	I	
140	VRS-MFN-511D	D-Essential Chiller Unit Area Air Handling Unit Fan	PS/B	9	ESF	1yr	Mild	Mild	No (1)	M	I	
141	Deleted											
142	Deleted											
143	Deleted											
144	Deleted											
145	VRS-MEH-511A	A-Essential Chiller Unit Area Air Handling Unit Electric Heating Coil	PS/B	9	ESF	1yr	Mild	Mild	No (1)	M	I	
146	VRS-MEH-511B	B-Essential Chiller Unit Area Air Handling Unit Electric Heating Coil	PS/B	9	ESF	1yr	Mild	Mild	No (1)	M	I	
147	VRS-MEH-511C	C-Essential Chiller Unit Area Air Handling Unit Electric Heating Coil	PS/B	9	ESF	1yr	Mild	Mild	No (1)	M	I	
148	VRS-MEH-511D	D-Essential Chiller Unit Area Air Handling Unit Electric Heating Coil	PS/B	9	ESF	1yr	Mild	Mild	No (1)	M	I	
149	VRS-MAH-531A	A-Charging Pump Area Air Handling Unit	R/B	7	ESF	1yr	Mild	Harsh	No (1)	M	I	
150	VRS-MAH-531B	B-Charging Pump Area Air Handling Unit	R/B	7	ESF	1yr	Mild	Harsh	No (1)	M	I	
151	VRS-MFN-531A	A-Charging Pump Area Air Handling Unit Fan	R/B	7	ESF	1yr	Mild	Harsh	No (1)	M	I	
152	VRS-MFN-531B	B-Charging Pump Area Air Handling Unit Fan	R/B	7	ESF	1yr	Mild	Harsh	No (1)	M	I	
153	Deleted											
154	Deleted											
155	(Deleted)											
156	(Deleted)											
157	VRS-MEH-531A	A-Charging Pump Area Air Handling Unit Electric Heating Coil	R/B	7	ESF	1yr	Mild	Harsh	No (1)	M	I	

Table 3D-2 US-APWR Environmental Qualification Equipment List (Sheet 60 of 65)

Item Num	Equipment Tag	Description	Location		Purpose	Operational Duration	Environmental Conditions	Radiation Condition	Influence of Submergence for Total Integrated Dose	Qualification Process	Seismic Category	Comments
			Building	Zone	RT, ESF, PAM, Pressure Boundary (PB), Other(1)		Harsh or Mild	Harsh or Mild	Yes/No	E=Electrical M=Mechanical	I, II, Non	
158	VRS-MEH-531B	B-Charging Pump Area Air Handling Unit Electric Heating Coil	R/B	7	ESF	1yr	Mild	Harsh	No (1)	M	I	
159	VRS-MAH-541A	A-Annulus Emergency Exhaust Filtration Unit Area Air Handling Unit	R/B	7	ESF	1yr	Mild	Harsh	No (1)	M	I	
160	VRS-MAH-541B	B-Annulus Emergency Exhaust Filtration Unit Area Air Handling Unit	R/B	7	ESF	1yr	Mild	Harsh	No (1)	M	I	
161	VRS-MFN-541A	A-Annulus Emergency Exhaust Filtration Unit Area Air Handling Unit Fan	R/B	7	ESF	1yr	Mild	Harsh	No (1)	M	I	
162	VRS-MFN-541B	B-Annulus Emergency Exhaust Filtration Unit Area Air Handling Unit Fan	R/B	7	ESF	1yr	Mild	Harsh	No (1)	M	I	
163	Deleted											
164	Deleted											
165	Deleted											
166	Deleted											
167	VRS-MEH-541A	A-Annulus Emergency Exhaust Filtration Unit Area Air Handling Unit Electric Heating Coil	R/B	7	ESF	1yr	Mild	Harsh	No (1)	M	I	
168	VRS-MEH-541B	B-Annulus Emergency Exhaust Filtration Unit Area Air Handling Unit Electric Heating Coil	R/B	7	ESF	1yr	Mild	Harsh	No (1)	M	I	
169	VRS-MAH-551A	A-Penetration Area Air Handling Unit	R/B	6	ESF	1yr	Mild	Harsh	No (1)	M	I	
170	VRS-MAH-551B	B-Penetration Area Air Handling Unit	R/B	6	ESF	1yr	Mild	Harsh	No (1)	M	I	
171	VRS-MAH-551C	C-Penetration Area Air Handling Unit	R/B	6	ESF	1yr	Mild	Harsh	No (1)	M	I	
172	VRS-MAH-551D	D-Penetration Area Air Handling Unit	R/B	6	ESF	1yr	Mild	Harsh	No (1)	M	I	
173	VRS-MFN-551A	A-Penetration Area Air Handling Unit Fan	R/B	6	ESF	1yr	Mild	Harsh	No (1)	M	I	
174	VRS-MFN-551B	B-Penetration Area Air Handling Unit Fan	R/B	6	ESF	1yr	Mild	Harsh	No (1)	M	I	
175	VRS-MFN-551C	C-Penetration Area Air Handling Unit Fan	R/B	6	ESF	1yr	Mild	Harsh	No (1)	M	I	
176	VRS-MFN-551D	D-Penetration Area Air Handling Unit Fan	R/B	6	ESF	1yr	Mild	Harsh	No (1)	M	I	
177	Deleted											
178	Deleted											

Table 3D-2 US-APWR Environmental Qualification Equipment List (Sheet 61 of 65)

Item Num	Equipment Tag	Description	Location		Purpose	Operational Duration	Environmental Conditions	Radiation Condition	Influence of Submergence for Total Integrated Dose	Qualification Process	Seismic Category	Comments
			Building	Zone	RT, ESF, PAM, Pressure Boundary (PB), Other(1)		Harsh or Mild	Harsh or Mild	Yes/No	E=Electrical M=Mechanical	I, II, Non	
179	Deleted											
180	Deleted											
181	VRS-MEH-551A	A-Penetration Area Air Handling Unit Electric Heating Coil	R/B	6	ESF	1yr	Mild	Harsh	No (1)	M	I	
182	VRS-MEH-551B	B-Penetration Area Air Handling Unit Electric Heating Coil	R/B	6	ESF	1yr	Mild	Harsh	No (1)	M	I	
183	VRS-MEH-551C	C-Penetration Area Air Handling Unit Electric Heating Coil	R/B	6	ESF	1yr	Mild	Harsh	No (1)	M	I	
184	VRS-MEH-551D	D-Penetration Area Air Handling Unit Electric Heating Coil	R/B	6	ESF	1yr	Mild	Harsh	No (1)	M	I	
185	VRS-MAH-561A	A-Spent Fuel Pit Pump Area Air Handling Unit	R/B	7	ESF	1yr	Mild	Harsh	No(1)	M	I	
186	VRS-MAH-561B	B-Spent Fuel Pit Pump Area Air Handling Unit	R/B	7	ESF	1yr	Mild	Harsh	No(1)	M	I	
187	VRS-MFN-561A	A-Spent Fuel Pit Pump Area Air Handling Unit Fan	R/B	7	ESF	1yr	Mild	Harsh	No(1)	M	I	
188	VRS-MFN-561B	B-Spent Fuel Pit Pump Area Air Handling Unit Fan	R/B	7	ESF	1yr	Mild	Harsh	No(1)	M	I	
189	Deleted											
190	Deleted											
191	Deleted											
192	Deleted											
193	VRS-MEH-561A	A-Spent Fuel Pit Pump Area Air Handling Unit Electric Heating Coil	R/B	7	ESF	1yr	Mild	Harsh	No(1)	M	I	
194	VRS-MEH-561B	B-Spent Fuel Pit Pump Area Air Handling Unit Electric Heating Coil	R/B	7	ESF	1yr	Mild	Harsh	No(1)	M	I	
Equipment (Containment Ventilation System)												
1	VCS-AOV-304	Air Operated Valve	R/B	6	ESF	5min	Mild	Harsh	No (1)	M	I	
2	VCS-AOV-305	Air Operated Valve	PCCV	1-6	ESF	5min	Harsh	Harsh	No (1)	M	I	
3	VCS-AOV-306	Air Operated Valve	PCCV	1-6	ESF	5min	Harsh	Harsh	No (1)	M	I	
4	VCS-AOV-307	Air Operated Valve	R/B	6	ESF	5min	Mild	Harsh	No (1)	M	I	
5	VCS-AOV-354	Air Operated Valve	R/B	6	ESF	5min	Mild	Harsh	No (1)	M	I	

Table 3D-2 US-APWR Environmental Qualification Equipment List (Sheet 62 of 65)

Item Num	Equipment Tag	Description	Location		Purpose	Operational Duration	Environmental Conditions	Radiation Condition	Influence of Submergence for Total Integrated Dose	Qualification Process	Seismic Category	Comments
			Building	Zone	RT, ESF, PAM, Pressure Boundary (PB), Other(1)		Harsh or Mild	Harsh or Mild	Yes/No	E=Electrical M=Mechanical	I, II, Non	
6	VCS-AOV-355	Air Operated Valve	PCCV	1-6	ESF	5min	Harsh	Harsh	No (1)	M	I	
7	VCS-AOV-356	Air Operated Valve	PCCV	1-6	ESF	5min	Harsh	Harsh	No (1)	M	I	
8	VCS-AOV-357	Air Operated Valve	R/B	6	ESF	5min	Mild	Harsh	No (1)	M	I	
Equipment (Auxiliary Building Ventilation System)												
1	VAS-AOD-501A	Air Operated Damper	R/B	13-3	ESF	5min	Mild	Mild	No (1)	M	I	
2	VAS-AOD-501B	Air Operated Damper	R/B	13-3	ESF	5min	Mild	Mild	No (1)	M	I	
3	VAS-AOD-502A	Air Operated Damper	R/B	6	ESF	5min	Mild	Harsh	No (1)	M	I	
4	VAS-AOD-502B	Air Operated Damper	R/B	6	ESF	5min	Mild	Harsh	No (1)	M	I	
5	VAS-AOD-503A	Air Operated Damper	R/B	6	ESF	5min	Mild	Harsh	No (1)	M	I	
6	VAS-AOD-503B	Air Operated Damper	R/B	6	ESF	5min	Mild	Harsh	No (1)	M	I	
7	VAS-AOD-504A	Air Operated Damper	R/B	13-3	ESF	5min	Mild	Mild	No (1)	M	I	
8	VAS-AOD-504B	Air Operated Damper	R/B	13-3	ESF	5min	Mild	Mild	No (1)	M	I	
9	VAS-AOD-505A	Air Operated Damper	R/B	13-3	ESF	5min	Mild	Mild	No (1)	M	I	
10	VAS-AOD-505B	Air Operated Damper	R/B	13-3	ESF	5min	Mild	Mild	No (1)	M	I	
11	VAS-AOD-505C	Air Operated Damper	R/B	13-3	ESF	5min	Mild	Mild	No (1)	M	I	
12	VAS-AOD-505D	Air Operated Damper	R/B	13-3	ESF	5min	Mild	Mild	No (1)	M	I	
13	VAS-AOD-506A	Air Operated Damper	R/B	6	ESF	5min	Mild	Harsh	No (1)	M	I	
14	VAS-AOD-506B	Air Operated Damper	R/B	6	ESF	5min	Mild	Harsh	No (1)	M	I	
15	VAS-AOD-506C	Air Operated Damper	R/B	6	ESF	5min	Mild	Harsh	No (1)	M	I	
16	VAS-AOD-506D	Air Operated Damper	R/B	6	ESF	5min	Mild	Harsh	No (1)	M	I	
17	VAS-AOD-507A	Air Operated Damper	R/B	6	ESF	5min	Mild	Harsh	No (1)	M	I	
18	VAS-AOD-507B	Air Operated Damper	R/B	6	ESF	5min	Mild	Harsh	No (1)	M	I	
19	VAS-AOD-507C	Air Operated Damper	R/B	6	ESF	5min	Mild	Harsh	No (1)	M	I	
20	VAS-AOD-507D	Air Operated Damper	R/B	6	ESF	5min	Mild	Harsh	No (1)	M	I	
21	VAS-AOD-508A	Air Operated Damper	R/B	13-3	ESF	5min	Mild	Mild	No (1)	M	I	

Table 3D-2 US-APWR Environmental Qualification Equipment List (Sheet 63 of 65)

Item Num	Equipment Tag	Description	Location		Purpose	Operational Duration	Environmental Conditions	Radiation Condition	Influence of Submergence for Total Integrated Dose	Qualification Process	Seismic Category	Comments
			Building	Zone	RT, ESF, PAM, Pressure Boundary (PB), Other(1)		Harsh or Mild	Harsh or Mild	Yes/No	E=Electrical M=Mechanical	I, II, Non	
22	VAS-AOD-508B	Air Operated Damper	R/B	13-3	ESF	5min	Mild	Mild	No (1)	M	I	
23	VAS-AOD-508C	Air Operated Damper	R/B	13-3	ESF	5min	Mild	Mild	No (1)	M	I	
24	VAS-AOD-508D	Air Operated Damper	R/B	13-3	ESF	5min	Mild	Mild	No (1)	M	I	
25	VAS-AOD-511	Air Operated Damper	R/B	6	ESF	5min	Mild	Harsh	No (1)	M	I	
26	VAS-AOD-512	Air Operated Damper	R/B	6	ESF	5min	Mild	Harsh	No (1)	M	I	
Equipment (Chilled Water System)												
1	VWS-MEQ-001A	A-Essential Chiller Unit	PS/B	9	ESF	1yr	Mild	Mild	No (1)	M	I	
2	VWS-MEQ-001B	B-Essential Chiller Unit	PS/B	9	ESF	1yr	Mild	Mild	No (1)	M	I	
3	VWS-MEQ-001C	C-Essential Chiller Unit	PS/B	9	ESF	1yr	Mild	Mild	No (1)	M	I	
4	VWS-MEQ-001D	D-Essential Chiller Unit	PS/B	9	ESF	1yr	Mild	Mild	No (1)	M	I	
5	VWS-MPP-001A	A-Essential Chilled Water Pump	PS/B	9	ESF	1yr	Mild	Mild	No (1)	M	I	
6	VWS-MPP-001B	B-Essential Chilled Water Pump	PS/B	9	ESF	1yr	Mild	Mild	No (1)	M	I	
7	VWS-MPP-001C	C-Essential Chilled Water Pump	PS/B	9	ESF	1yr	Mild	Mild	No (1)	M	I	
8	VWS-MPP-001D	D-Essential Chilled Water Pump	PS/B	9	ESF	1yr	Mild	Mild	No (1)	M	I	
9	Deleted											
10	Deleted											
11	Deleted											
12	Deleted											
13	VWS-TCV-141	Chilled Water Control Valve	R/B	8	ESF	1yr	Mild	Harsh	No (1)	M	I	
14	VWS-TCV-151	Chilled Water Control Valve	R/B	8	ESF	1yr	Mild	Harsh	No (1)	M	I	
15	VWS-TCV-161	Chilled Water Control Valve	R/B	8	ESF	1yr	Mild	Harsh	No (1)	M	I	
16	VWS-TCV-171	Chilled Water Control Valve	R/B	8	ESF	1yr	Mild	Harsh	No (1)	M	I	
17	VWS-TCV-206	Chilled Water Control Valve	R/B	8	ESF	1yr	Mild	Harsh	No (1)	M	I	
18	VWS-TCV-226	Chilled Water Control Valve	R/B	8	ESF	1yr	Mild	Harsh	No (1)	M	I	
19	VWS-TCV-246	Chilled Water Control Valve	R/B	8	ESF	1yr	Mild	Harsh	No (1)	M	I	

Table 3D-2 US-APWR Environmental Qualification Equipment List (Sheet 64 of 65)

Item Num	Equipment Tag	Description	Location		Purpose	Operational Duration	Environmental Conditions	Radiation Condition	Influence of Submergence for Total Integrated Dose	Qualification Process	Seismic Category	Comments
			Building	Zone	RT, ESF, PAM, Pressure Boundary (PB), Other(1)		Harsh or Mild	Harsh or Mild	Yes/No	E=Electrical M=Mechanical	I, II, Non	
20	VWS-TCV-266	Chilled Water Control Valve	R/B	8	ESF	1yr	Mild	Harsh	No (1)	M	I	
21	VWS-TCV-304	Chilled Water Control Valve	R/B	8	ESF	1yr	Mild	Harsh	No (1)	M	I	
22	VWS-TCV-314	Chilled Water Control Valve	R/B	8	ESF	1yr	Mild	Harsh	No (1)	M	I	
23	VWS-TCV-324	Chilled Water Control Valve	R/B	8	ESF	1yr	Mild	Harsh	No (1)	M	I	
24	VWS-TCV-344	Chilled Water Control Valve	R/B	8	ESF	1yr	Mild	Harsh	No (1)	M	I	
25	VWS-TCV-402	Chilled Water Control Valve	R/B	8	ESF	1yr	Mild	Harsh	No (1)	M	I	
26	VWS-TCV-412	Chilled Water Control Valve	R/B	8	ESF	1yr	Mild	Harsh	No (1)	M	I	
27	VWS-TCV-422	Chilled Water Control Valve	R/B	8	ESF	1yr	Mild	Harsh	No (1)	M	I	
28	VWS-TCV-432	Chilled Water Control Valve	R/B	8	ESF	1yr	Mild	Harsh	No (1)	M	I	
29	VWS-TCV-502	Chilled Water Control Valve	R/B	8	ESF	1yr	Mild	Harsh	No (1)	M	I	
30	VWS-TCV-512	Chilled Water Control Valve	R/B	8	ESF	1yr	Mild	Harsh	No (1)	M	I	
31	VWS-TCV-522	Chilled Water Control Valve	R/B	8	ESF	1yr	Mild	Harsh	No (1)	M	I	
32	VWS-TCV-532	Chilled Water Control Valve	R/B	8	ESF	1yr	Mild	Harsh	No (1)	M	I	
33	VWS-TCV-542	Chilled Water Control Valve	PS/B	9	ESF	1yr	Mild	Mild	No (1)	M	I	
34	VWS-TCV-552	Chilled Water Control Valve	PS/B	9	ESF	1yr	Mild	Mild	No (1)	M	I	
35	VWS-TCV-562	Chilled Water Control Valve	PS/B	9	ESF	1yr	Mild	Mild	No (1)	M	I	
36	VWS-TCV-572	Chilled Water Control Valve	PS/B	9	ESF	1yr	Mild	Mild	No (1)	M	I	
37	VWS-TCV-582	Chilled Water Control Valve	R/B	7	ESF	1yr	Mild	Harsh	No (1)	M	I	
38	(Deleted)											
39	(Deleted)											
40	VWS-TCV-592	Chilled Water Control Valve	R/B	7	ESF	1yr	Mild	Harsh	No (1)	M	I	
41	VWS-TCV-602A	Chilled Water Control Valve	R/B	7	ESF	1yr	Mild	Harsh	No (1)	M	I	
42	VWS-TCV-602B	Chilled Water Control Valve	R/B	7	ESF	1yr	Mild	Harsh	No (1)	M	I	
43	VWS-TCV-612A	Chilled Water Control Valve	R/B	7	ESF	1yr	Mild	Harsh	No (1)	M	I	
44	VWS-TCV-612B	Chilled Water Control Valve	R/B	7	ESF	1yr	Mild	Harsh	No (1)	M	I	

Table 3D-2 US-APWR Environmental Qualification Equipment List (Sheet 65 of 65)

Item Num	Equipment Tag	Description	Location		Purpose	Operational Duration	Environmental Conditions	Radiation Condition	Influence of Submergence for Total Integrated Dose	Qualification Process	Seismic Category	Comments
			Building	Zone	RT, ESF, PAM, Pressure Boundary (PB), Other(1)		Harsh or Mild	Harsh or Mild	Yes/No	E=Electrical M=Mechanical	I, II, Non	
45	VWS-TCV-622	Chilled Water Control Valve	R/B	6	ESF	1yr	Mild	Harsh	No (1)	M	I	
46	VWS-TCV-632	Chilled Water Control Valve	R/B	6	ESF	1yr	Mild	Harsh	No (1)	M	I	
47	VWS-TCV-642	Chilled Water Control Valve	R/B	6	ESF	1yr	Mild	Harsh	No (1)	M	I	
48	VWS-TCV-652	Chilled Water Control Valve	R/B	6	ESF	1yr	Mild	Harsh	No (1)	M	I	
49	VWS-TCV-662A	Chilled Water Control Valve	R/B	7	ESF	1yr	Mild	Harsh	No (1)	M	I	
50	VWS-TCV-662B	Chilled Water Control Valve	R/B	7	ESF	1yr	Mild	Harsh	No (1)	M	I	
51	VWS-TCV-672A	Chilled Water Control Valve	R/B	7	ESF	1yr	Mild	Harsh	No (1)	M	I	
52	VWS-TCV-672B	Chilled Water Control Valve	R/B	7	ESF	1yr	Mild	Harsh	No (1)	M	I	
53	VWS-MOV-403	Motor Operated Valve	R/B	6	ESF	5min	Mild	Harsh	No (1)	M	I	
54	VWS-MOV-407	Motor Operated Valve	R/B	6	ESF	5min	Mild	Harsh	No (1)	M	I	
55	VWS-MOV-422	Motor Operated Valve	PCCV	1-6	ESF	5min	Harsh	Harsh	No (1)	M	I	
56	Deleted											
57	Deleted											
58	Deleted											
59	Deleted											

Notes:
1. Identification number for “Influence of Submergence for Total Integrated Dose”
   (1) Components with no possibility of submergence.
   (2) These components can be submerged in case of HELB, however these components are not required to assure the safety function (including components with alternatives).
   (3) Nonsafety-related components.
2. Identification number for “Comments”
   (1) If required, this equipment can be repaired, replaced, or recalibrated after 2 weeks post-accident.
3. Identification number for “Purpose”
   (1) All active valves in Table 3D-2 have the function and operating duration of “PB-1yr” in addition to any other requirements.

Table 3D-3 Location for Zone

Zone	Location
1	Containment
1-1	Reactor Vessel
1-2	Nuclear Instrument System
1-3	Inside Reactor Coolant System
1-4	Inside Secondary Shield (including Regenerative Hx Room)
1-5	Under Operation Floor
1-6	Above Operation Floor (including Refueling Water Storage Pit)
2	MCR and Remote Shutdown Console Room
3	Class 1E I&C Room
4	Class 1E I&C Electrical Room, UPS Room, Battery Charger Room, and Reactor Trip Breaker Room
5	Class 1E Battery Room
6	Penetration Area and Safeguard Component Area (Radiological Area)
7	Safety-Related Component Area (Radiological Area)
8	Safety-Related Component Area (Non-Radiological Area)
9	Essential Chiller Unit and Pump Room
10	Main Steam/Feedwater Piping Area
11	Gas Turbine Area
12	Fuel Handling Area
13	Reactor Building and Auxiliary Building General Mechanical Area (Radiological Area)
13-1	Auxiliary Building General Mechanical Area
13-2	Reactor Building Sample Heat Exchanger Room
13-3	Reactor Building Passage
14	Reactor Building and Turbine Building General Mechanical Area (Non-Radiological Area)

Table 3D-4 List of Electrical Equipment with Special Seismic Qualification Requirements

Item Num	Equipment Tag	Description	Location	Seismic Category I, II, Non	Comments
Instrument (Transmitter)					
1	LMS-LT-093A	Containment Sump Water Level A	PCCV	Non	Note (1)
Instrument (Radiation Monitor)					
1	RMS-RE-040	Containment Airborne Particulate Radiation	R/B	Non	Note (1)
Electrical Cabinet					
1	DAAC-1	Diverse Automatic Actuation Cabinet (1)	R/B	II	Note (2)
2	DAAC-2	Diverse Automatic Actuation Cabinet (2)	R/B	II	Note (2)
3	DAAC-3	Diverse Automatic Actuation Cabinet (3)	R/B	II	Note (2)
4	DAAC-4	Diverse Automatic Actuation Cabinet (4)	R/B	II	Note (2)
5	DHP	Diverse HSI Panel	R/B	II	Note (2)
6	PBD	Power Breaker for DHP	R/B	II	Note (2)
7	SC	Supervisor Console	R/B	II	
8	STAC	Shift Technical Advisor Console	R/B	II	
9	LDP	Large Display Panel	R/B	II	

Note (1) An SSE will not result in a failure of this leakage detection equipment. The seismic qualification method is equivalent to that for seismic category I qualification of safety-related I&C equipment as described in the US-APWR Equipment Qualification Program.

Note (2) An SSE will not result in a failure of the DAS that adversely affects the PSMS. The seismic qualification method is equivalent to that for seismic category I qualification of safety-related electrical cabinets as described in the US-APWR Equipment Qualification Program.

APPENDIX 3E

HIGH ENERGY AND MODERATE ENERGY PIPING IN THE PRESTRESSED CONCRETE CONTAINMENT VESSEL AND REACTOR BUILDING

CONTENTS

Page

3E High Energy and Moderate Energy Piping in the Prestressed Concrete Containment Vessel and Reactor Building....3E-1

3E.1 Introduction....3E-1

FIGURES

Page

Figure 3E-1 Reactor Coolant System Flow Diagram (1/2) 3E-2

Figure 3E-2 Reactor Coolant System Flow Diagram (2/2) 3E-3

Figure 3E-3 Chemical and Volume Control System Flow Diagram (1/4) 3E-4

Figure 3E-4 Chemical and Volume Control System Flow Diagram (2/4) 3E-5

Figure 3E-5 Chemical and Volume Control System Flow Diagram (3/4) 3E-6

Figure 3E-6 Chemical and Volume Control System Flow Diagram (4/4) 3E-7

Figure 3E-7 Safety Injection System Flow Diagram 3E-8

Figure 3E-8 Emergency Feedwater System Flow Diagram (1/2) 3E-9

Figure 3E-9 Emergency Feedwater System Flow Diagram (2/2) 3E-10

Figure 3E-10 Main Feed Water System Flow Diagram 3E-11

Figure 3E-11 Main Steam System Flow Diagram (1/2) 3E-12

Figure 3E-12 Main Steam System Flow Diagram (2/2) 3E-13

Figure 3E-13 Steam Generator Blowdown System Flow Diagram 3E-14

ACRONYMS AND ABBREVIATIONS

LBB	leak-before-break
PCCV	prestressed concrete containment vessel
R/B	reactor building

3E High Energy and Moderate Energy Piping in the Prestressed Concrete Containment Vessel and Reactor Building

3E.1 Introduction

This appendix identifies high-energy piping in the prestressed concrete containment vessel (PCCV) and reactor building (R/B) with a diameter greater than 1 inch. Piping selected for leak-before-break (LBB) criteria (see Appendix 3B) are also identified in these figures. These figures identify piping in the break exclusion zones outside containment. One inch piping and smaller are not included in these figures. Instrumentation and instrument lines are not included.

High-energy piping includes those systems or portion of systems that, during normal plant operating conditions, are either in operation or maintained pressurized at operating temperature that exceed 200°F or the maximum operating pressure 275 psig. Piping systems or portion of systems pressurized above atmospheric pressure during normal plant conditions and not identified as high-energy are considered moderate energy. Piping systems that exceed 200°F or 275 psig for 2% or less of the time during which the system is in operation are considered moderate energy. Breaks in high-energy piping greater than 1 inch are postulated based on the criteria provided in Subsection 3.6.2. Breaks are not postulated in high-energy piping system meeting the LBB criteria defined in Subsection 3.6.3.

LEGEND:

Candidate LBB Piping

High Energy Break Exclusion Zone Piping
(diameter is greater than 1 inch)

Other High Energy Piping in PCCV and R/B
(diameter is greater than 1 inch)

Boundary

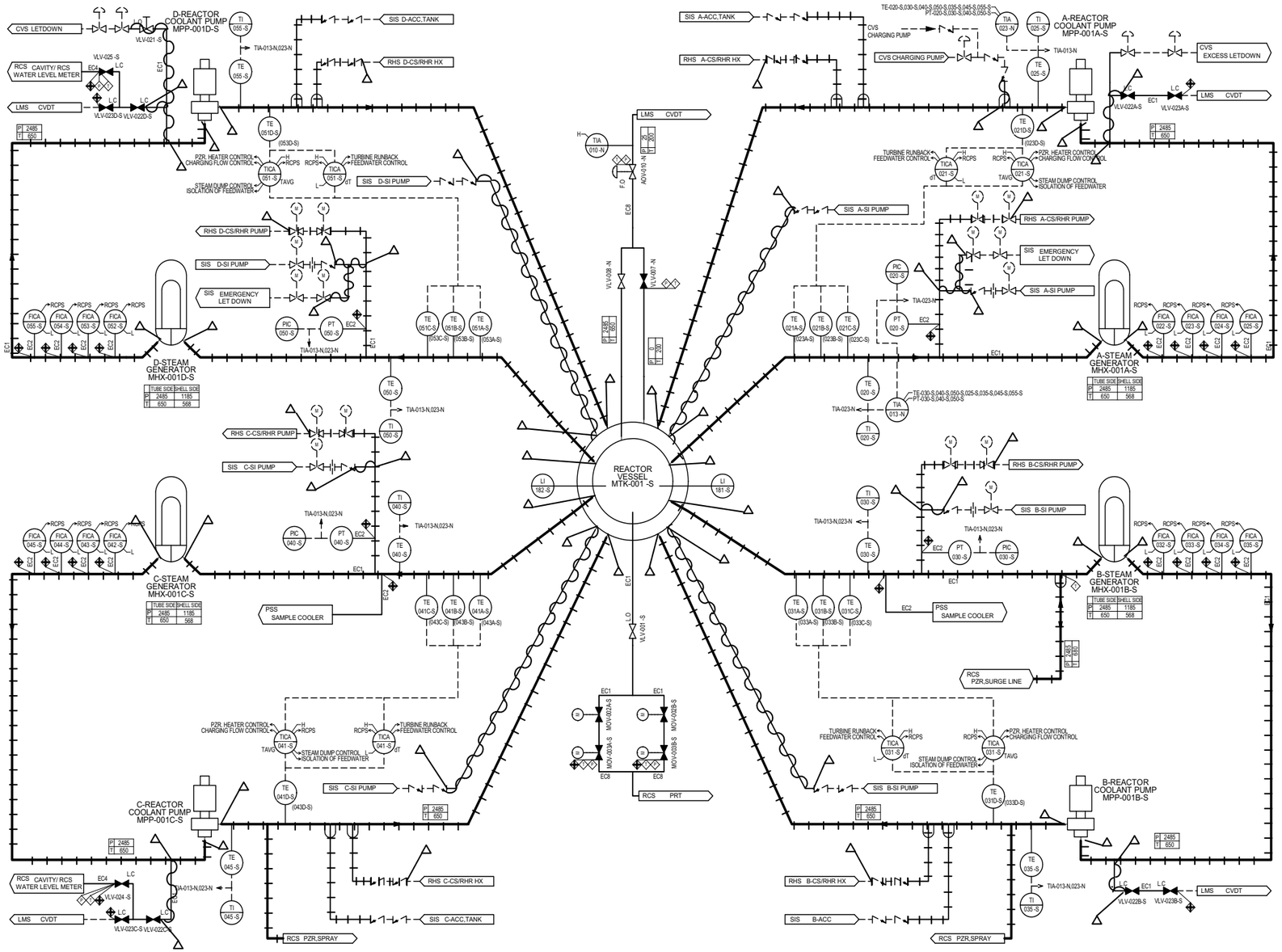

Figure 3E-1 Reactor Coolant System Flow Diagram (1/2)

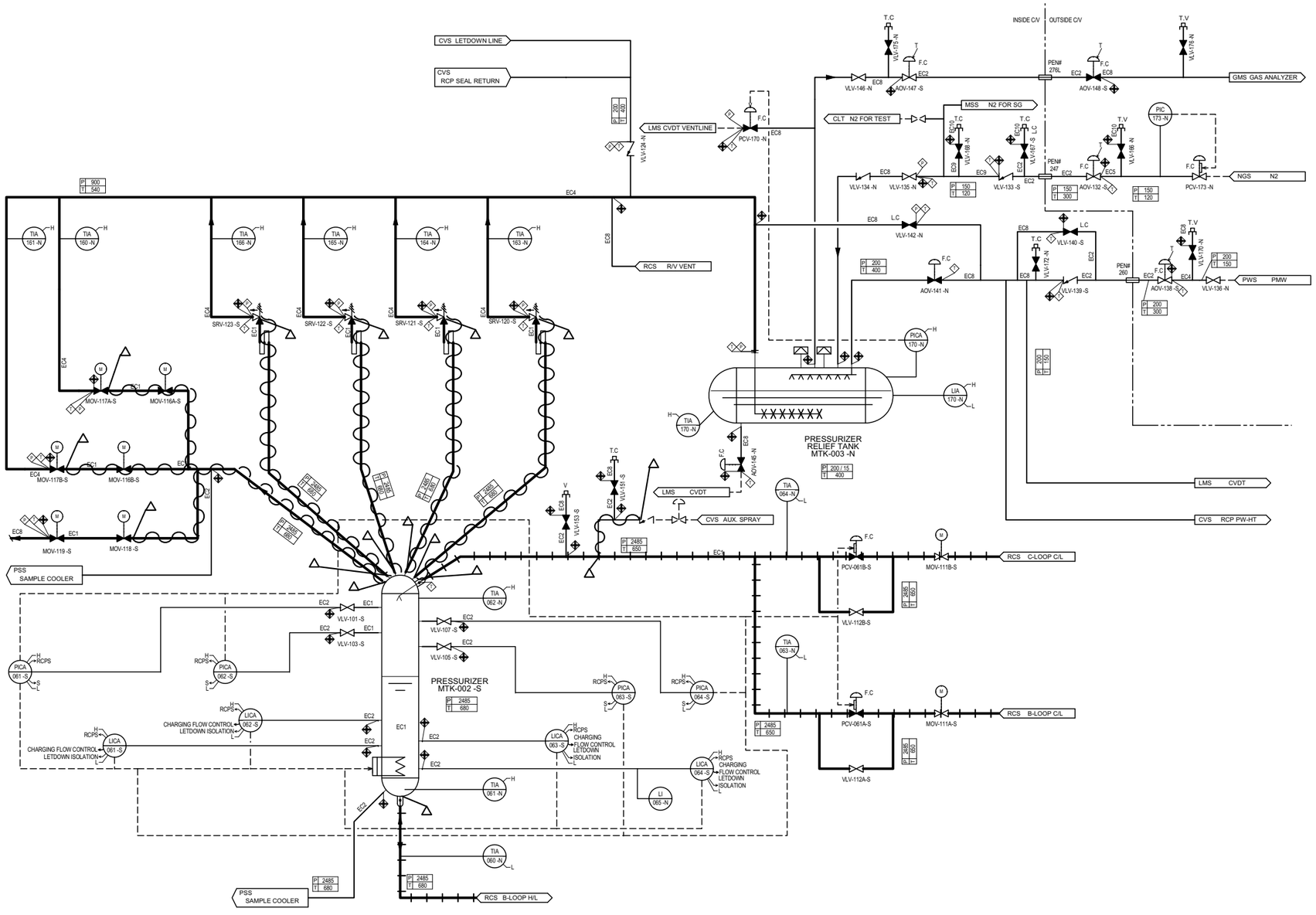

Figure 3E-2 Reactor Coolant System Flow Diagram (2/2)

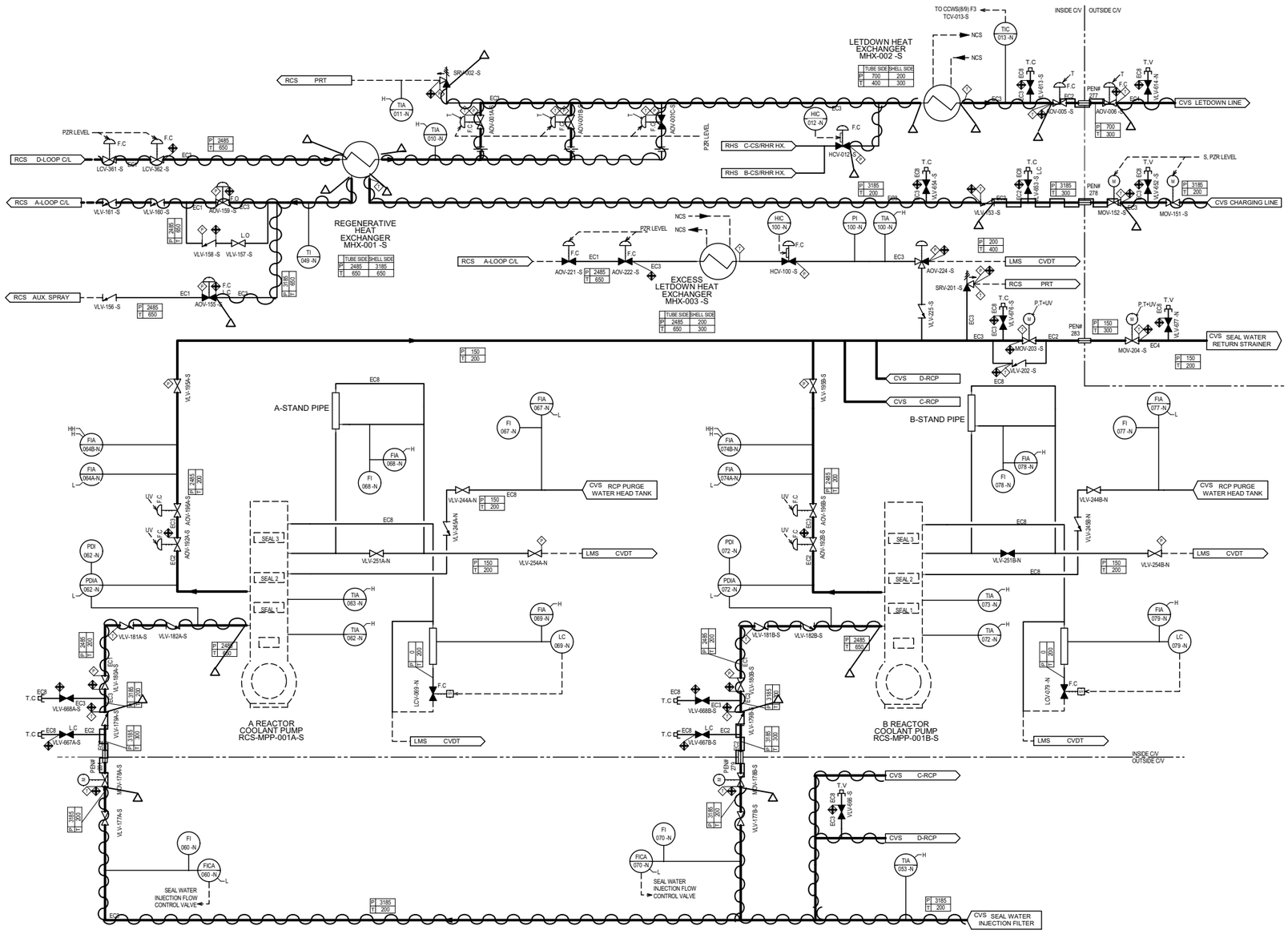

Figure 3E-3 Chemical and Volume Control System Flow Diagram (1/4)

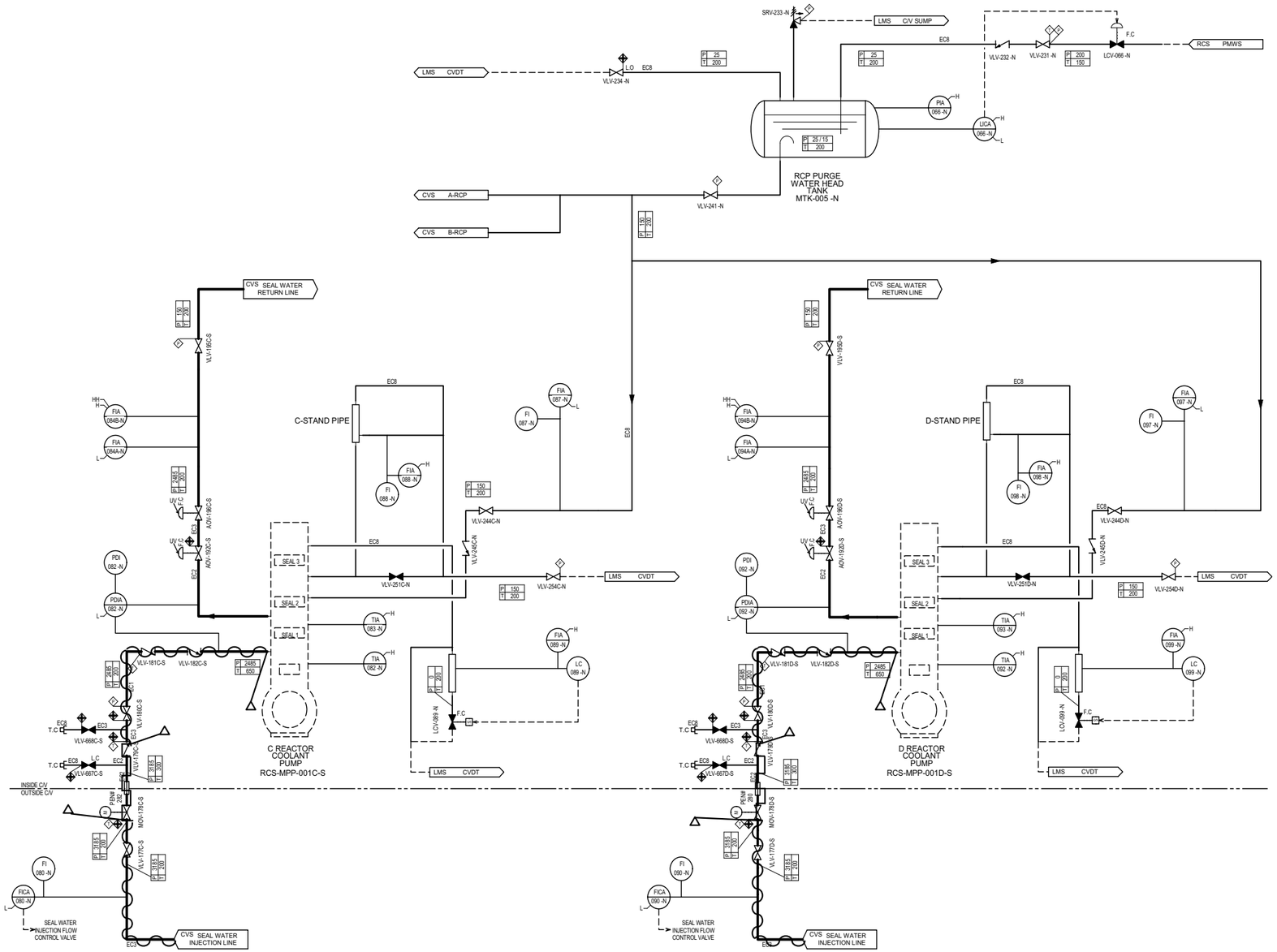

Figure 3E-4 Chemical and Volume Control System Flow Diagram (2/4)

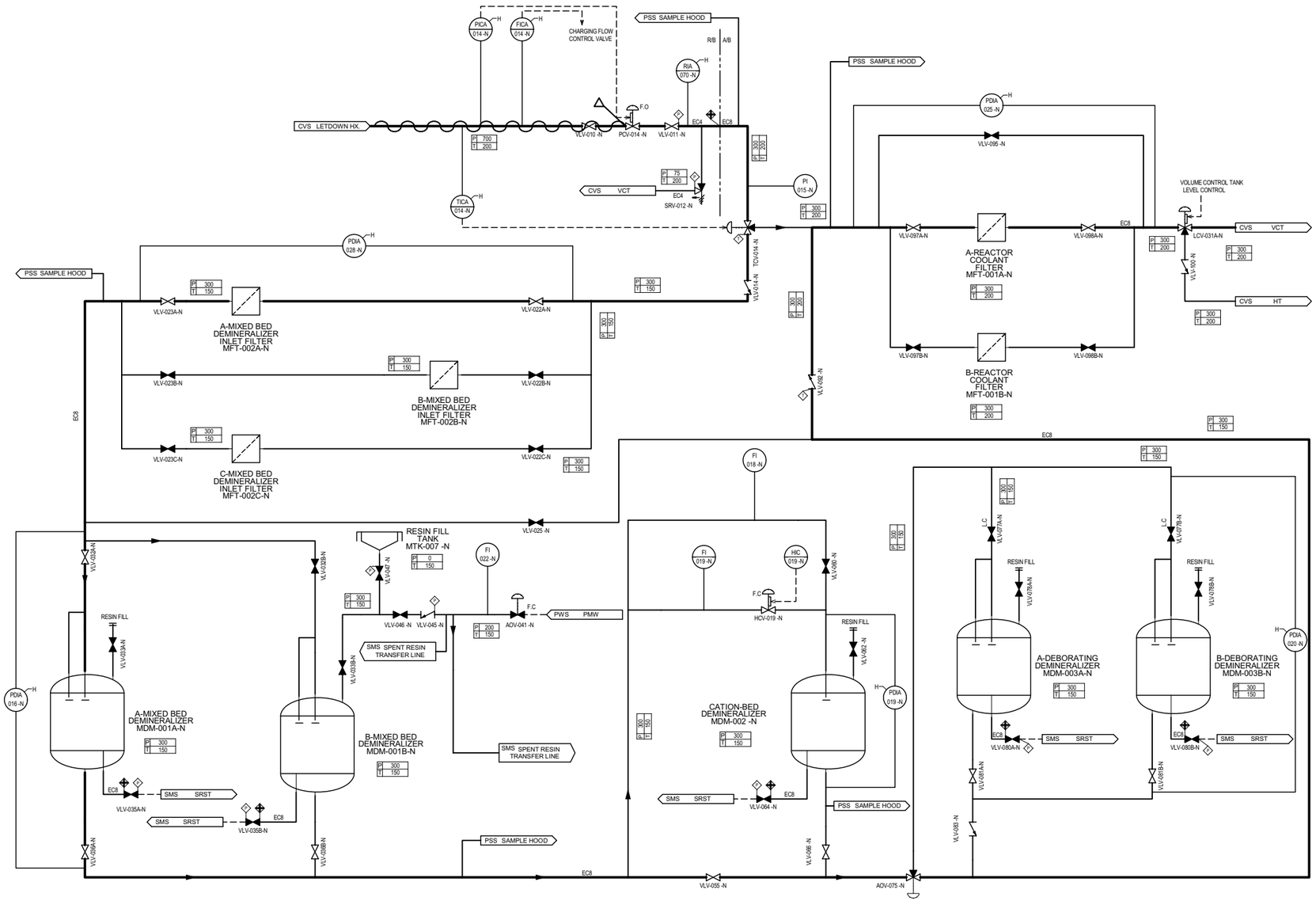

Note: Figure is used only to schematically identify high-energy piping, and is not intended to represent site-specific system configuration.

Figure 3E-5 Chemical and Volume Control System Flow Diagram (3/4)

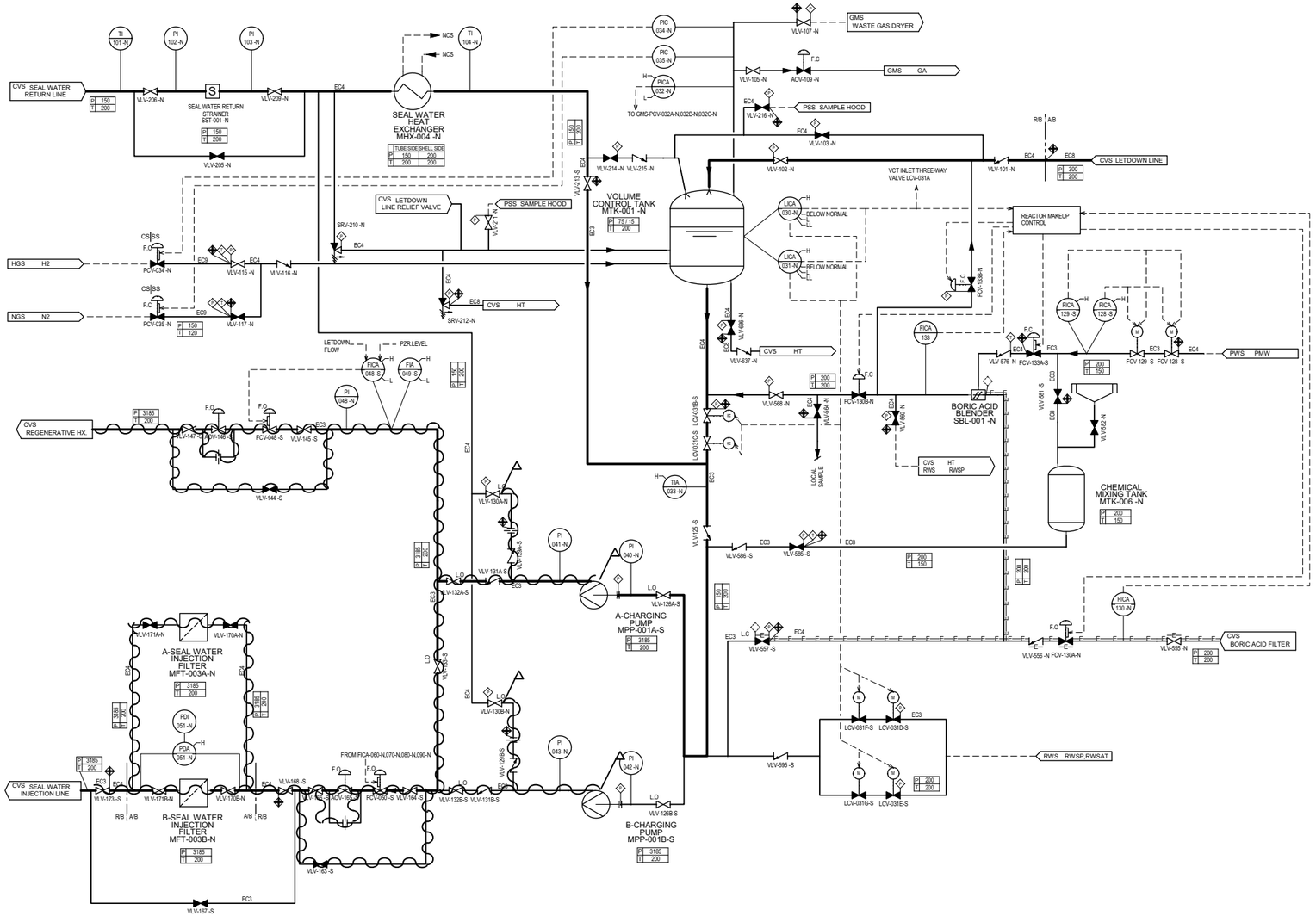

Note: Figure is used only to schematically identify high-energy piping, and is not intended to represent site-specific system configuration.

Figure 3E-6 Chemical and Volume Control System Flow Diagram (4/4)

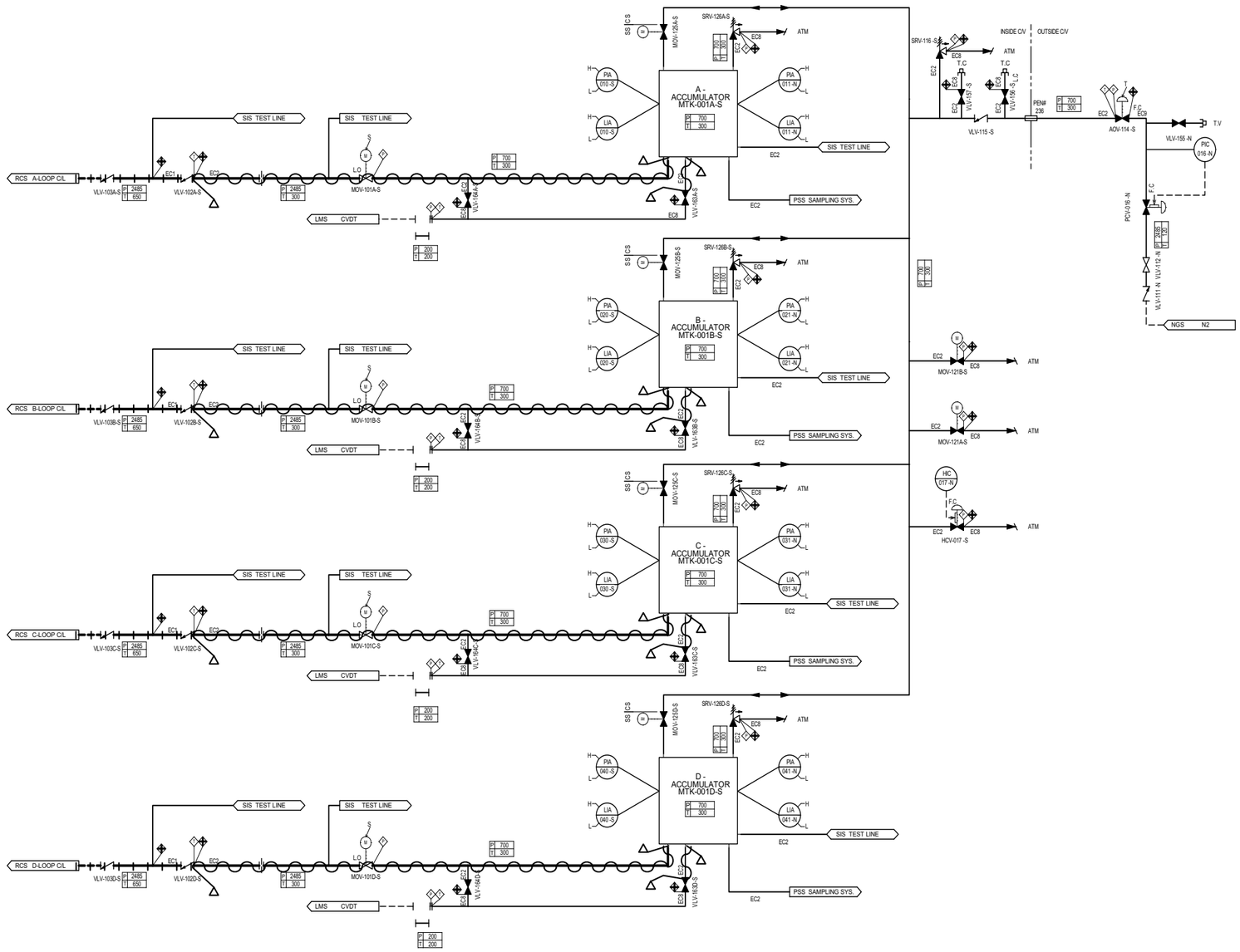

Figure 3E-7 Safety Injection System Flow Diagram

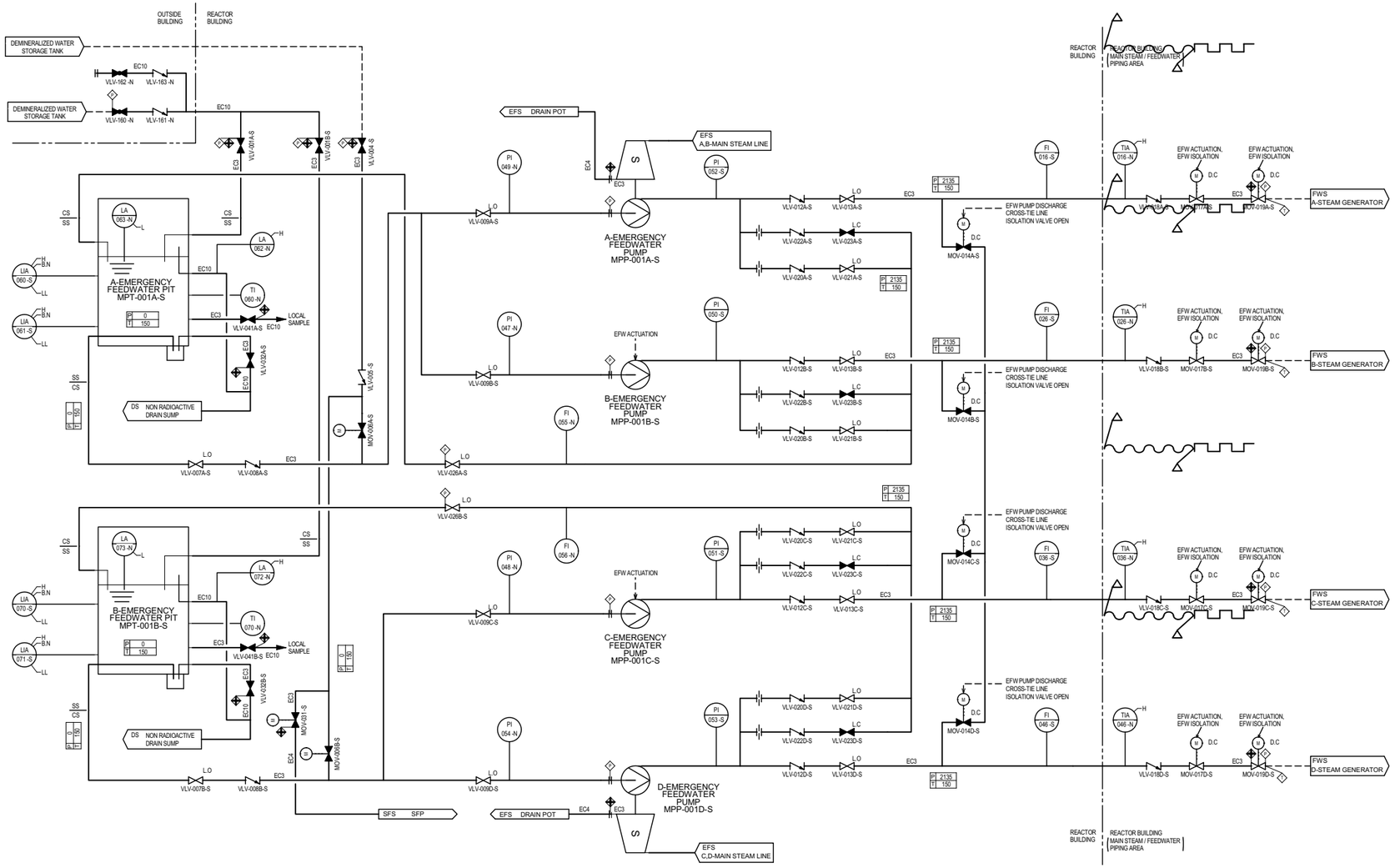

Figure 3E-8 Emergency Feedwater System Flow Diagram (1/2)

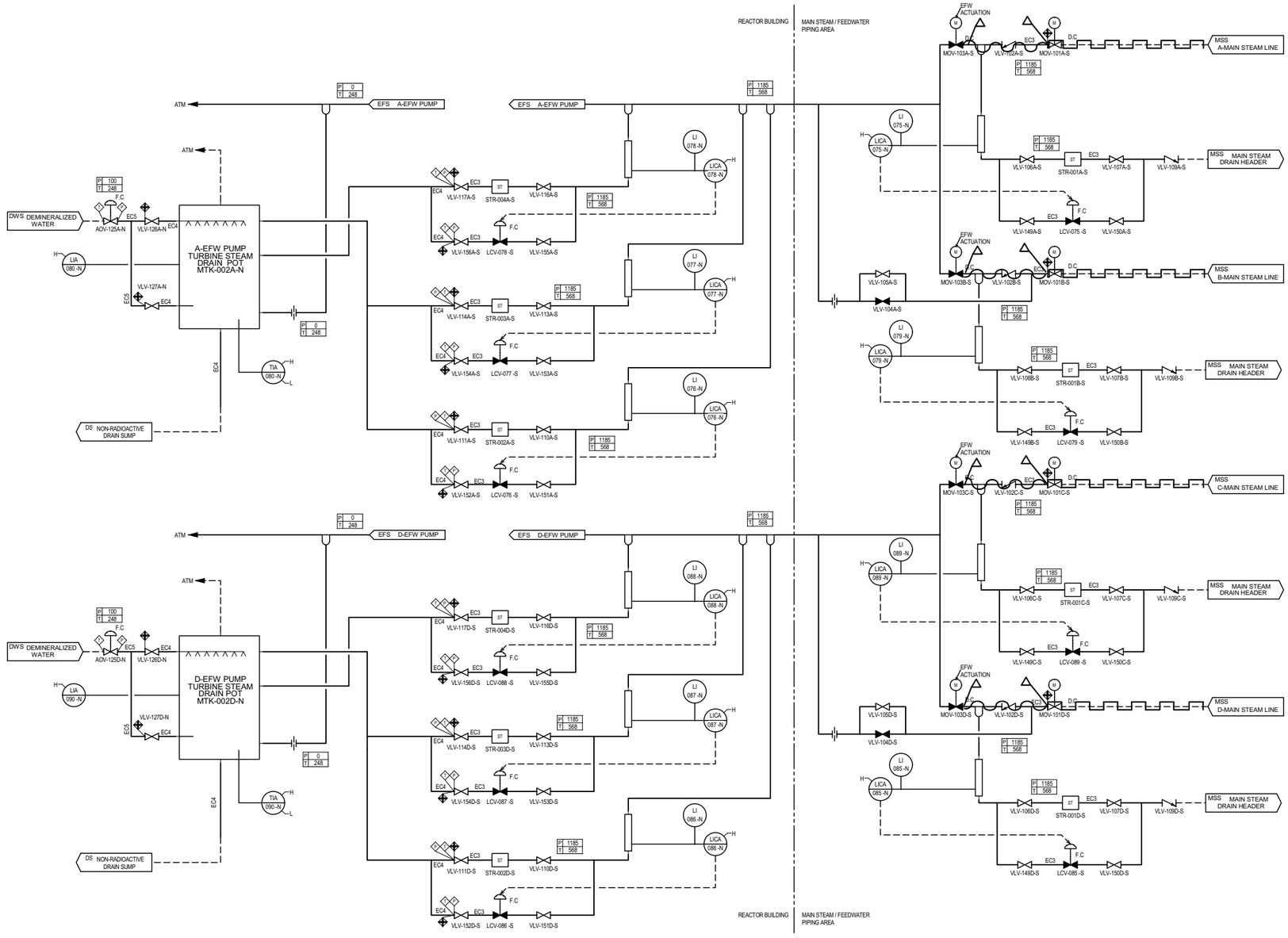

Figure 3E-9 Emergency Feedwater System Flow Diagram (2/2)

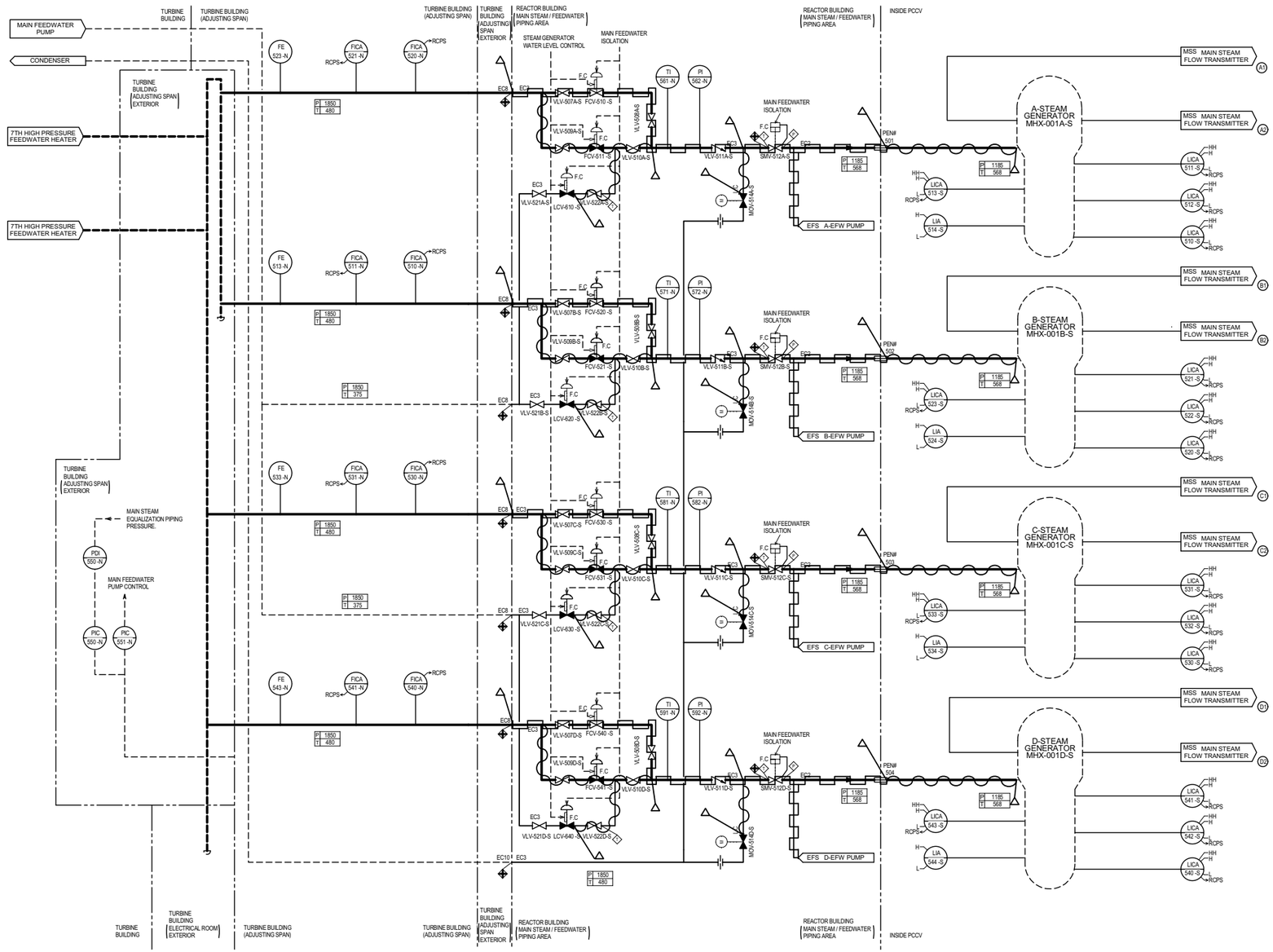

Figure 3E-10 Main Feed Water System Flow Diagram

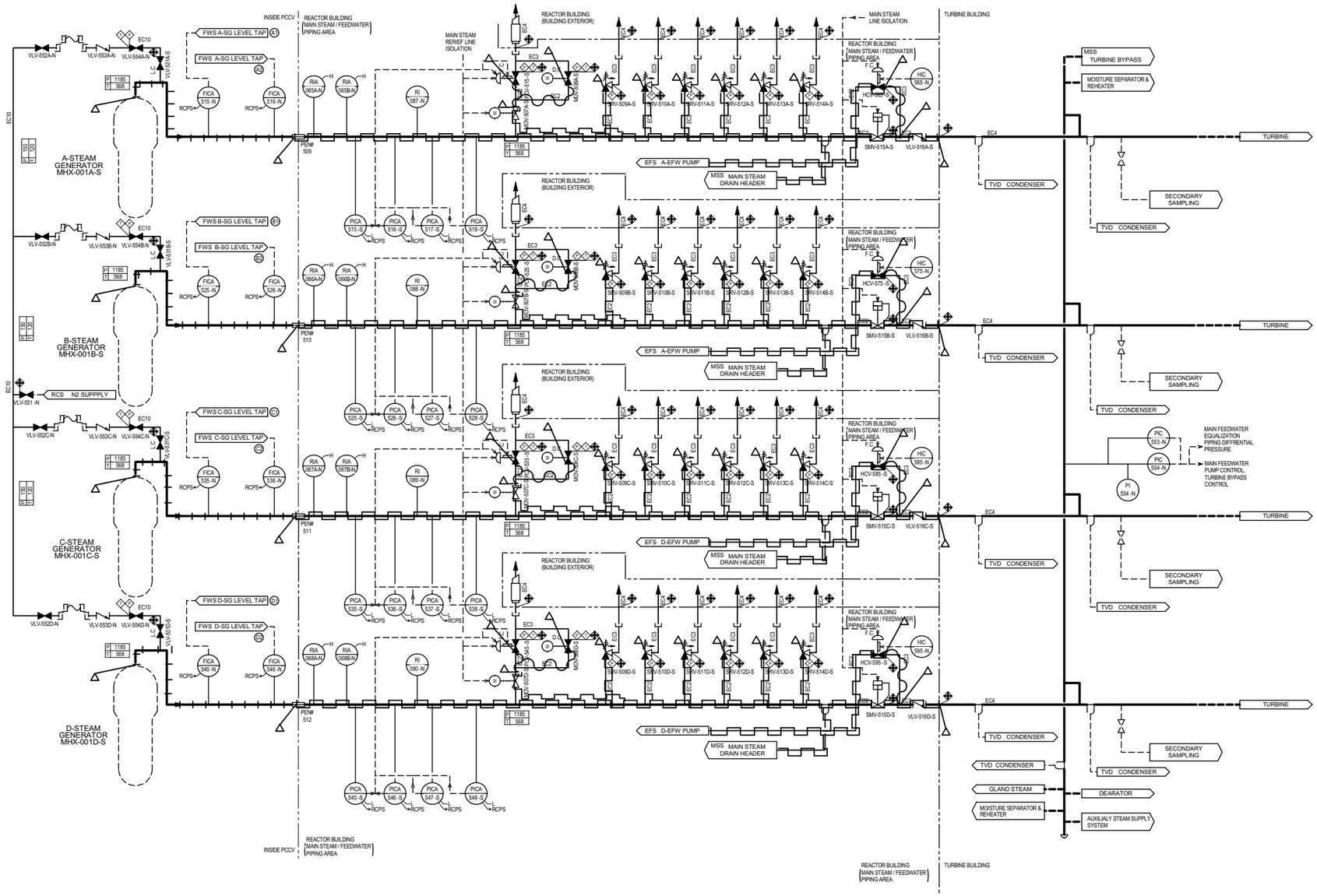

Figure 3E-11 Main Steam System Flow Diagram (1/2)

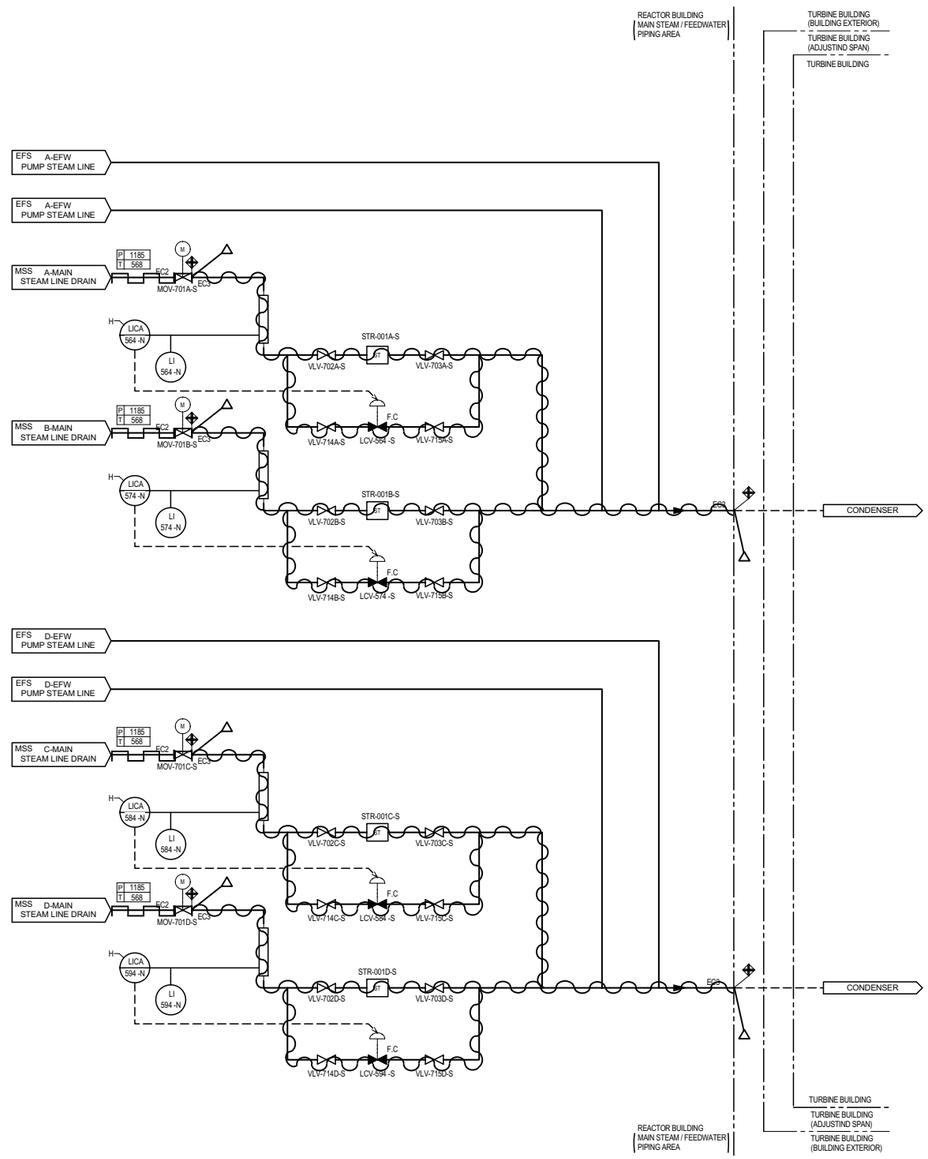

Figure 3E-12 Main Steam System Flow Diagram (2/2)

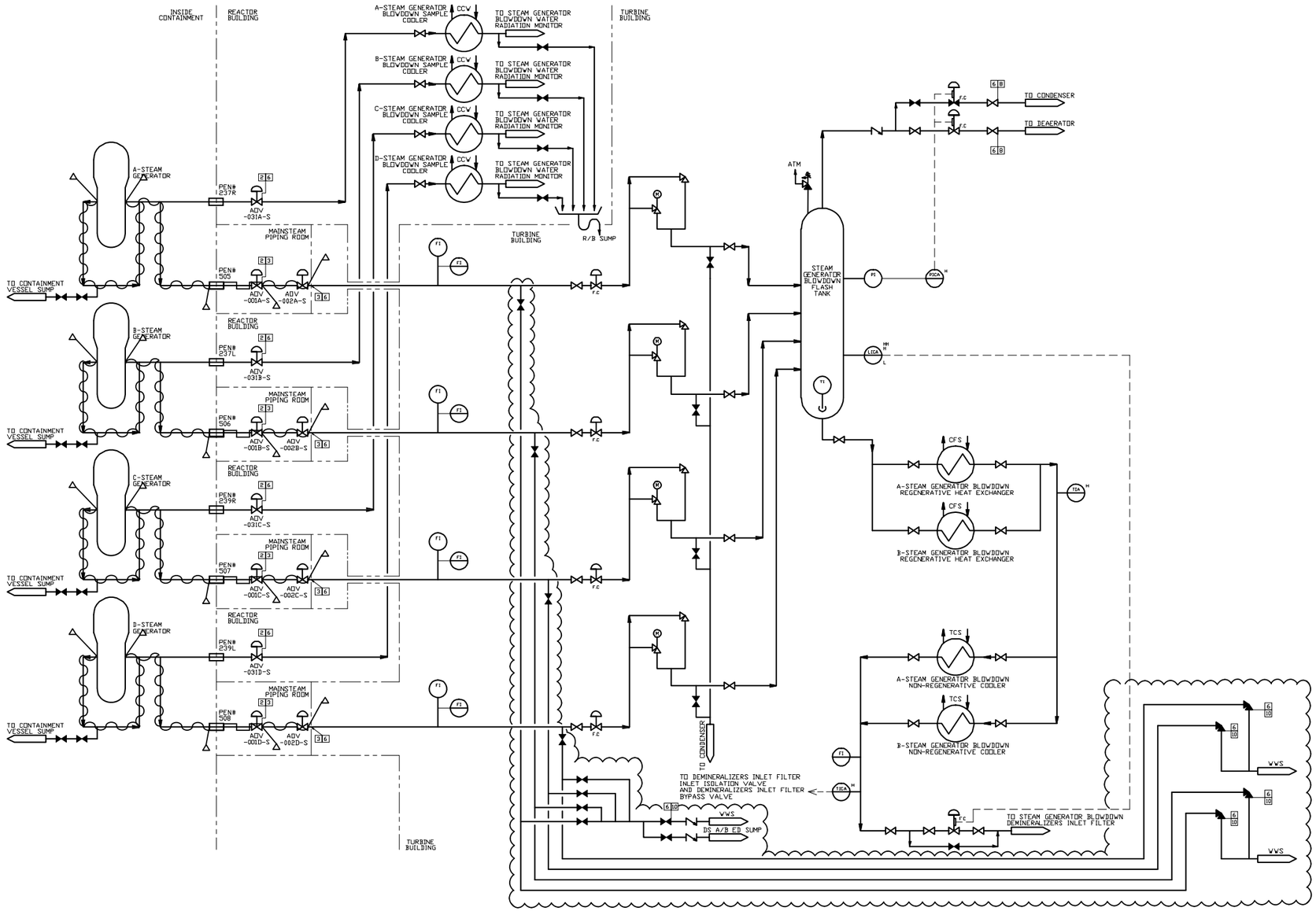

Figure 3E-13 Steam Generator Blowdown System Flow Diagram

APPENDIX 3F

DESIGN OF CONDUIT AND CONDUIT SUPPORTS

CONTENTS

Page

3F Design of Conduit and Conduit Supports 3F-1

3F.1 Description 3F-1

3F.1.1 Seismic Category I Conduit Systems 3F-1

3F.1.2 Seismic Category II Conduit Systems 3F-1

3F.2 Applicable Codes, Standards, and Specifications 3F-2

3F.3 Loads and Load Combinations 3F-2

3F.3.1 Loads 3F-2

3F.3.2 Load Combinations 3F-2

3F.4 Design and Analysis Procedures 3F-2

3F.4.1 Equivalent Static Analysis 3F-3

3F.4.2 Response Spectrum Modal Analysis 3F-3

3F.5 Structural Acceptance Criteria 3F-3

3F.5.1 Allowable Stresses 3F-3

3F.5.1.1 Conduit 3F-3

3F.5.1.2 Conduit Supports 3F-3

3F.5.2 Deflection Limitations 3F-3

3F.6 Materials3F-4

3F.6.1 Cold Formed Steel Shapes 3F-4

3F.6.2 Structural Steel Shapes 3F-4

3F.6.3 Conduit 3F-4

3F.6.4 Electrical Boxes 3F-4

3F.6.5 Welding 3F-4

3F.6.6 Anchor Bolts 3F-4

3F.6.7 Bolts 3F-4

3F.7 References 3F-4

ACRONYMS AND ABBREVIATIONS

ACI	American Concrete Institute
AISC	American Institute of Steel Construction
AISI	American Iron and Steel Institute
ANSI	American National Standards Institute
ASTM	American Society for Testing Materials
AWS	American Welding Society
CSDRS	certified seismic design response spectra
ERAC	Electrical Rigid Aluminum Conduit
ERSC	Electrical Rigid Steel Conduit
FIRS	foundation input response spectra
GMRS	ground motion response spectra
NEC	National Electric Code
NEMA	National Electrical Manufacturer Association
NFPA	National Fire Protection Association
SSC	structure, system, and component
SSE	safe-shutdown earthquake

3F Design of Conduit and Conduit Supports

3F.1 Description

Conduit is a means of routing electrical and fiber optic cable to and from termination points in equipment and cable tray. The conduit assures electrical and fiber optic cables are protected from various means of damage. Conduit supports are the means by which conduit is supported and protected from seismic events and other postulated loads. The term conduit and conduit supports includes electrical rigid and flexible conduit of various material types and diameters, a variety of conduit support configurations, junction boxes and their supports, and conduit fittings (hereafter referred as conduit systems). Conduit containing non-Class 1E cable in seismic category II and non-seismic structures are not required to satisfy the requirements of this appendix.

In general, the design of conduit and conduit supports is accomplished through the following steps:

- Determine applicable load combinations and corresponding allowable stresses for conduit and conduit supports.
- Limit spacing of conduit supports to maintain conduit stresses within allowable stresses corresponding to the applicable load combinations.
- Assure maximum stresses are within allowable stresses corresponding to the applicable load combination.
- Provide system bracing to control seismic movement and interaction with other category I, structures, systems, and components (SSCs).

3F.1.1 Seismic Category I Conduit Systems

Seismic category I conduit systems, electrical conduit containing Class 1E cable, are designed for all applicable load combinations to maintain structural integrity within stress limits. This is achieved by analyzing the conduit system and limiting support spacing to maintain critical stresses to acceptably low levels. The seismic qualification of conduit systems, including supporting brackets, is to satisfy the safe-shutdown earthquake (SSE) requirements of the plant system(s) for which it is associated. Seismic category I conduit systems, including support anchorages, in the US-APWR, standard plant seismic category I structures are analyzed and designed for a SSE which is equivalent to the in-structure response spectra developed from the certified seismic design response spectra (CSDRS). Site-specific seismic category I structures are analyzed and designed using as a minimum the site-specific SSE developed from the site-specific ground motion response spectra (GMRS) and foundation input response spectra (FIRS).

3F.1.2 Seismic Category II Conduit Systems

Seismic category II conduit systems, electrical conduit containing non-Class 1E cable in seismic category I buildings, are not essential for safe shutdown of the plant and need not remain functional during, and after, a SSE. However, such conduit systems must not fall

or displace excessively where they could damage any seismic category I SSCs. Seismic category II conduit systems, including support anchorages, are therefore analyzed and designed using the same methods and stress limits specified for seismic category I structures and subsystems in Table 3.8.4-4.

3F.2 Applicable Codes, Standards, and Specifications

Conduits are manufactured to satisfy the American National Standard Institute (ANSI) C80.1 American Standard for Electrical Rigid Steel Conduit (ERSC), (Reference 3F-1) or ANSI C80.5, American Standard for Electrical Rigid Aluminum Conduit (ERAC), (Reference 3F-2), as applicable. Junction boxes are manufactured to satisfy the National Electrical Manufacturer Association (NEMA) Standards Publication 250 Enclosures for Electrical Equipment (1000 Volts Maximum) (Reference 3F-3). Installation of the conduit system conforms to the requirements of the National Fire Protection Associations (NFPA) 70, National Electric Code (NEC), (Reference 3F-4).

The American Iron and Steel Institute (AISI) Specification for the Design of Cold-Formed Steel Members (Reference 3F-5) provides the methodology for structurally evaluating cold formed steel shapes, as applicable. Structural steel shapes used for supports are designed and constructed in accordance with the American Institute of Steel Construction (AISC) Specification for the Design, Fabrication, and Erection of Steel Safety Related Structures for Nuclear Facilities (Reference 3F-6). Welding is evaluated and performed in accordance with the American Welding Society (AWS) Standard D1.1 Structural Welding Code, (Reference 3F-7).

3F.3 Loads and Load Combinations

3F.3.1 Loads

Conduit systems are designed for dead, seismic, and thermal loads, as applicable. Design dead load includes the working load (weight) of cables permitted in the conduit. In addition, any accessory loads to the conduit and conduit supports are included in the qualification of the conduit and conduit supports.

3F.3.2 Load Combinations

Refer to Subsection 3.8.4.3 for various load combinations applicable to seismic category I SSCs.

Seismic category II conduit and conduit supports are qualified for the applicable SSE to assure they do not damage any seismic category I SSCs by falling or displacing excessively under any seismic loads. Seismic category II conduit supports are, therefore, qualified for maximum seismic load combinations and associated allowable stresses as discussed in Subsection 3.8.4.3.

3F.4 Design and Analysis Procedures

Refer to Section 3.7 for seismic system analysis and qualification requirements of seismic category I and seismic category II SSCs and their supports.

3F.4.1 Equivalent Static Analysis

Equivalent static analysis determined seismic loads for conduit and conduit support systems as detailed in Subsection 3.7.2.1. The mass considered included nominal size weights, concentrated weights, support members, cable, insulation, conduit (including cantilevers), flexible conduit, and other applicable components.

3F.4.2 Response Spectrum Modal Analysis

For more exact results, conduit systems can be analyzed using the envelope broadened response spectra methods, considering uniform support motion, or the independent support motion method.

3F.5 Structural Acceptance Criteria

3F.5.1 Allowable Stresses

Allowable stress coefficients are applied in accordance with basic allowables of AISC or AISI. Refer to Subsection 3.8.4.5 for combination of appropriate allowable stresses with the appropriate load combinations and material specifications

3F.5.1.1 Conduit

Conduits containing Class 1E cables are designed to withstand the combined effects of normal operating loads (dead weight) acting simultaneously with the seismic loadings.

3F.5.1.2 Conduit Supports

Seismic category I and seismic category II supports are designed to withstand the combined effects of normal operating loads (dead weight) acting simultaneously with the seismic loadings.

3F.5.2 Deflection Limitations

No specific deflection limitations for seismic category I and seismic category II conduit systems are applicable. These components are designed not to fall during a seismic event. Additionally, displacements are limited to prevent potential adverse interactions with adjacent commodities. Refer to Subsection 3.7.2.8 for criteria relating to seismic interaction of structures or systems adjacent to seismic category I SSCs.

When conduits cross between adjacent buildings, the potential for differential movements is accommodated through lengths of flexible conduit and/or evaluation of induced stresses. Differential displacements caused by seismic motion are obtained at the conduit elevation using seismic analysis reports for each building.

3F.6 Materials

3F.6.1 Cold Formed Steel Shapes

Cold formed steel shapes that may be used as support members satisfy the requirements specified in Reference 3F-5.

3F.6.2 Structural Steel Shapes

The design, fabrication and installation of structural steel supports, and structural shapes and plates used in support construction, comply with AISC-N690-1994 (Reference 3F-6).

3F.6.3 Conduit

ERSC conforms to ANSI C80.1 (Reference 3F-1).

ERAC conforms to ANSI C80.5 (Reference 3F-2).

3F.6.4 Electrical Boxes

Electrical Boxes conform to NEMA Standards Publication 250 (Reference 3F-3).

3F.6.5 Welding

Welding electrodes are E70 series for structural steel shapes greater than 3/16th inch thick or E60 series for structural steel shapes less than or equal to 3/16th inch thick, in accordance with AWS A5 series specifications (Reference 3F-8).

3F.6.6 Anchor Bolts

Anchor bolts used for conduit supports, seismic category I and II, are expansion anchors qualified in accordance with American Concrete Institute (ACI) 355.2 (Reference 3F-9). The flexibility of base anchorage was considered in determining the anchor bolt loads.

3F.6.7 Bolts

Bolts used in conduit support, seismic category I and II; conform to American Society for Testing and Materials (ASTM) A-307 (Reference 3F-10).

3F.7 References

3F-1 American Standard for Electrical Rigid Steel Conduit (ERSC). ANSI C80.1-2005, American National Standard Institute, 2005.

3F-2 American Standard for Electrical Rigid Aluminum Conduit (EARC). ANSI C80.5-2005, American National Standard Institute, 2005.

3F-3 NEMA Standards Publication 250-2003 Enclosures for Electrical Equipment (1000 Volts Maximum). National Electrical Manufacturer Association, 2003.

3F-4 National Electric Code (NEC). NFPA 70, National Fire Protection Association, 2005.

3F-5 Specification for the Design of Cold-Formed Steel Members, Part 1 and 2. 1996 Edition and 2000 Supplement, American Iron and Steel Institute.

3F-6 Specification for the Design, Fabrication, and Erection of Steel Safety Related Structures for Nuclear Facilities. AISC-N690-1994, American Institute of Steel Construction, 1994.

3F-7 Structural Welding Code. AWS D1.1/D1.1M, 2006, American Welding Society.

3F-8 A5 Filler Metal Specifications plus the Filler Metal Procurement Guidelines. AWS A5 Series, 1998-2007, American Welding Society.

3F-9 Qualification of Post-Installed Mechanical Anchors in Concrete. ACI 355.2, American Concrete Institute, 2004.

3F-10 Standard Specification for Carbon Steel Bolts and Studs, 60 000 PSI Tensile Strength. ASTM A-307-07, American Society for Testing and Materials International, 2007.

APPENDIX 3G

SEISMIC QUALIFICATION OF CABLE TRAYS AND SUPPORTS

CONTENTS

Page

3G Seismic Qualification of Cable Trays and Supports 3G-1

3G.1 Description 3G-1

3G.1.1 Seismic Category I Cable Tray Systems 3G-1

3G.1.2 Seismic Category II Cable Tray Systems 3G-1

3G.2 Applicable Codes, Standards and Specifications 3G-2

3G.3 Loads and Load Combinations 3G-2

3G.3.1 Loads 3G-2

3G.3.2 Load Combinations 3G-2

3G.4 Design and Analysis Procedures 3G-2

3G.4.1 Equivalent Static Analysis 3G-2

3G.4.2 Modal Response Spectrum Analysis 3G-3

3G.5 Structural Acceptance Criteria 3G-3

3G.5.1 Allowable Stresses 3G-3

3G.5.2 Deflection Limitations 3G-3

3G.6 Materials 3G-3

3G.6.1 Cable Tray 3G-3

3G.6.2 Cold Formed Steel Shapes 3G-3

3G.6.3 Structural Steel Shapes 3G-3

3G.7 References 3G-4

ACRONYMS AND ABBREVIATIONS

AISC	American Institute of Steel Construction
AISI	American Iron and Steel Institute
CSDRS	certified seismic design response spectra
FIRS	foundation input response spectra
GMRS	ground motion response spectra
NEC	National Electric Code
NEMA	National Electrical Manufacturer Association
SSC	structure, system, and component
SSE	safe-shutdown earthquake

3G Seismic Qualification of Cable Trays and Supports

3G.1 Description

This appendix provides the methodology used to qualify the structural integrity of seismic category I and seismic category II electrical cable trays and cable tray supports (hereafter referred to as “cable tray systems”). Cable tray systems containing non-Class 1E cable in non-seismic structures are not required to be qualified to the requirements of this appendix.

In general, the design of cable trays and cable tray supports is accomplished through the following steps:

- Determine applicable load combinations and corresponding allowable stresses for trays and supports
- Limit spacing of tray supports to maintain tray stresses within allowable stresses corresponding to the applicable load combination
- Assure that the maximum stresses of tray supports are within allowable stresses corresponding to the applicable load combination
- Provide system bracing to control seismic movement and interaction with other seismic category I structures, systems, or components (SSCs).

3G.1.1 Seismic Category I Cable Tray Systems

Seismic category I cable tray systems are designed for all applicable load combinations to maintain structural integrity within stress limits. This is achieved by analyzing the cable tray system (tray, fittings, connectors, fasteners, supports, etc.) and limiting the support spacing to maintain critical stresses to acceptably low levels. The seismic qualification of cable tray systems is to satisfy the safe-shutdown earthquake (SSE) requirements of the structure in which they are contained. Seismic category I cable tray systems, including support anchorages, in US-APWR standard plant seismic category I structures are analyzed and designed for a SSE which is equivalent to the in-structure response spectra developed from the certified seismic design response spectra (CSDRS). Site-specific seismic category I structures are analyzed and designed using as a minimum the site-specific SSE developed from the site-specific ground motion response spectra (GMRS) and foundation input response spectra (FIRS).

3G.1.2 Seismic Category II Cable Tray Systems

Seismic category II cable tray systems are designed to verify that the items will not fall or displace excessively where it could damage any seismic category I SSCs during, and after, a SSE. Seismic category II cable tray systems including support anchorages are, therefore, analyzed and designed for the applicable SSE, such as in-structure response spectra developed from the CSDRS within the standard plant Reactor Building and the East and West Power Source Buildings using the same methods and stress limits specified for seismic category I cable tray systems in Table 3.8.4-4.

3G.2 Applicable Codes, Standards and Specifications

Cable trays are manufactured to satisfy the National Electrical Manufacturers Association (NEMA) Standard VE-1, Metal Cable Tray Systems (Reference 3G-1), and consist of thin gauge steel channel side rails on ladder-type or solid-bottom trays, with or without covers. The installation of the cable tray system conforms to the requirements of NEMA Standard VE 2, Cable Tray Installation Guidelines (Reference 3G-2), and National Electric Code (NEC), Article 392, Cable Trays (Reference 3G-3).

The American Iron and Steel Institute (AISI) Specification for the Design of Cold-Formed Steel Members (Reference 3G-4) provides the methodology for evaluating cold formed shapes, as applicable. Structural steel shapes used for supports are designed and constructed in accordance with the American Institute of Steel Construction (AISC) Specification for the Design, Fabrication, and Erection of Steel Safety Related Structures for Nuclear Facilities (Reference 3G-5).

3G.3 Loads and Load Combinations

3G.3.1 Loads

Cable tray systems are designed for dead, live, seismic, and thermal loads, as applicable. Design dead load includes the working load (weight) of cables permitted in the tray (also known as “raceway”). Construction live load, defined as 250 pounds from one person plus equipment carried by the person, is considered in addition to the maximum weight of cables and trays; however, it is not present during design seismic events. In addition, any accessory loads to the cable trays and supports are included in the qualification of the cable tray and cable tray supports.

3G.3.2 Load Combinations

Refer to Subsection 3.8.4.3 for various load combinations applicable to seismic category I, SSCs. When determining dynamic loading for wall mounted supports, envelope the response spectra curves for the floors immediately above and below the support location.

Seismic category II cable tray systems are qualified for the applicable SSE to assure that they do not damage any seismic category I SSCs by falling or displacing excessively under any seismic loads. Seismic category II cable tray systems are, therefore, qualified for maximum seismic load combinations, and associated allowable stresses as discussed in Subsection 3.8.4.3.

3G.4 Design and Analysis Procedures

Refer to Section 3.7 for seismic system analysis and qualification requirements of seismic category I and II SSCs and their supports.

3G.4.1 Equivalent Static Analysis

Using equivalent horizontal and vertical static forces applied at the center of gravity of the various masses, the cable tray system is conservatively modeled to develop standard

tray spans and support designs. The seismic accelerations are taken as 1.5 times peak of the support attachment spectrum during this analysis except when technical justification is provided for a lower factor unique to certain configurations.

3G.4.2 Modal Response Spectrum Analysis

For more exact results, cable tray systems can be analyzed using the envelope broadened response spectra methods, considering uniform support motion, or the independent support motion method.

3G.5 Structural Acceptance Criteria

3G.5.1 Allowable Stresses

Allowable stress coefficients are applied in accordance with basic allowables of AISC or AISI. Refer to Subsection 3.8.4.5 for the combination of appropriate allowable stresses with the appropriate load combinations and material specifications.

3G.5.2 Deflection Limitations

No specific deflection limitations for seismic category I and II cable tray systems are applicable. These components are designed not to fall during a seismic event. However, displacements are limited to prevent potential adverse interactions with adjacent commodities. Refer to Subsection 3.7.2.8 for criteria relating to seismic interaction of structures or systems adjacent to seismic category I SSCs.

When cable trays cross between adjacent buildings, the potential for differential movements is accommodated through tray expansion connectors and/or the evaluation of induced stresses. Cable placement within trays also adequately allows for elongation. Differential displacements caused by seismic motion are obtained at the tray elevation using seismic analysis reports for each building.

3G.6 Materials

3G.6.1 Cable Tray

Cable trays, including connectors, fittings, and fasteners are manufactured in accordance with NEMA Standard VE-1 (Reference 3G-1).

3G.6.2 Cold Formed Steel Shapes

Cold formed steel shapes that may be used as support members satisfy the requirements specified in AISI, Specification for the Design of Cold-Formed Steel Members (Reference 3G-4).

3G.6.3 Structural Steel Shapes

The design, fabrication, and installation of structural steel supports, and structural shapes and plates used in support construction, comply with AISC-N690-1994, Specification for

the Design, Fabrication, and Erection of Steel Safety Related Structures for Nuclear Facilities (Reference 3G-5).

3G.7 References

3G-1 Metal Cable Tray Systems. NEMA Standard VE-1, National Electrical Manufacturer Association, 2002.

3G-2 Cable Tray Installation Guidelines. NEMA VE-2, National Electrical Manufacturer Association, 2006.

3G-3 Cable Trays. NEC Article 392, National Electric Code, 2002.

3G-4 Specification for the Design of Cold-Formed Steel Members. 1996 Edition and Supplement No 1, American Iron and Steel Institute, July 1999.

3G-5 Specification for the Design, Fabrication and Erection of Steel Safety Related Structures for Nuclear Facilities. AISC-N690-1994, American Institute of Steel Construction, 1994.

APPENDIX 3H

MODEL PROPERTIES FOR LUMPED MASS STICK MODELS OF R/B-PCCV-CONTAINMENT INTERNAL STRUCTURE ON A COMMON BASEMAT

CONTENTS

Page

3H Model Properties for Lumped Mass Stick Models of R/B-PCCV-Containment Internal Structure on a Common Basemat.....3H-1

3H.1 Introduction 3H-1

3H.2 References.....3H-1

3H Model Properties for Lumped Mass Stick Models of R/B-PCCV-Containment Internal Structure on a Common Basemat

3H.1 Introduction

Lumped mass stick models are no longer used in the seismic analysis of the R/B complex. Refer to MUAP-10006, "Soil-Structure Interaction Analyses and Results for the US-APWR Standard Plant," (Reference 3H-1) for discussion of the Finite Element model.

3H.2 References

3H-1 Soil-Structure Interaction Analyses and Results for the US-APWR Standard Plant, MUAP-10006, Rev. 3, Mitsubishi Heavy Industries, Ltd., November 2012.

APPENDIX 3I

IN-STRUCTURE RESPONSE SPECTRA

CONTENTS

Page

3I In-Structure Response Spectra 3I-1

3I.1 Introduction 3I-1

3I.2 References 3I-1

ACRONYMS AND ABBREVIATIONS

ISRS	in-structure response spectra

3I In-Structure Response Spectra

3I.1 Introduction

Refer to MUAP-10006, "Soil-Structure Interaction Analyses and Results for the US-APWR Standard Plant" (Reference 3I-1) for the in-structure response spectra (ISRS) for various buildings and elevations of the US-APWR standard plant.

3I.2 References

3I-1 Soil-Structure Interaction Analyses and Results for the US-APWR Standard Plant, MUAP-10006, Rev. 3, Mitsubishi Heavy Industries, November 2012.

APPENDIX 3J

REACTOR, POWER SOURCE, CONTAINMENT INTERNAL AND ESSENTIAL SERVICE WATER PIPE CHASE STRUCTURAL DESIGN

CONTENTS

Page

3J Reactor, Power Source, Containment Internal and the Essential Service Water Pipe Chase Structural Design 3J-1

3J.1 Introduction 3J-1

FIGURES

Page

Figure 3J-1 R/B Structural Drawings 3J-2

Figure 3J-2 Containment Internal Structure Drawings 3J-16

Figure 3J-3 PS/B East Structural Drawings 3J-26

Figure 3J-4 PS/B West Structural Drawings 3J-29

Figure 3J-5 Essential Service Water Pipe Chase Structural Drawings 3J-32

ACRONYMS AND ABBREVIATIONS

R/B	reactor building
PS/B	power source building
ESWPC	essential service water pipe chase

3J Reactor, Power Source, Containment Internal and the Essential Service Water Pipe Chase Structural Design

3J.1 Introduction

This appendix provides the structural drawings for the reactor building (R/B), containment internal structure, the east and west power source buildings (PS/Bs) and the Essential Service Water Pipe Chase (ESWPC) for the US-APWR.

Security-Related Information – Withheld Under 10 CFR 2.390

Figure 3J-1 R/B Structural Drawings (Sheet 1 of 14)

Security-Related Information – Withheld Under 10 CFR 2.390

Figure 3J-1 R/B Structural Drawings (Sheet 2 of 14)

Security-Related Information – Withheld Under 10 CFR 2.390

Figure 3J-1 R/B Structural Drawings (Sheet 3 of 14)

Security-Related Information – Withheld Under 10 CFR 2.390

Figure 3J-1 R/B Structural Drawings (Sheet 4 of 14)

Security-Related Information – Withheld Under 10 CFR 2.390

Figure 3J-1 R/B Structural Drawings (Sheet 5 of 14)

Security-Related Information – Withheld Under 10 CFR 2.390

Figure 3J-1 R/B Structural Drawings (Sheet 6 of 14)

Security-Related Information – Withheld Under 10 CFR 2.390

Figure 3J-1 R/B Structural Drawings (Sheet 7 of 14)

Security-Related Information – Withheld Under 10 CFR 2.390

Figure 3J-1 R/B Structural Drawings (Sheet 8 of 14)

Security-Related Information – Withheld Under 10 CFR 2.390

Figure 3J-1 R/B Structural Drawings (Sheet 9 of 14)

Security-Related Information – Withheld Under 10 CFR 2.390

Figure 3J-1 R/B Structural Drawings (Sheet 10 of 14)

Security-Related Information – Withheld Under 10 CFR 2.390

Figure 3J-1 R/B Structural Drawings (Sheet 11 of 14)

Security-Related Information – Withheld Under 10 CFR 2.390

Figure 3J-1 R/B Structural Drawings (Sheet 12 of 14)

Security-Related Information – Withheld Under 10 CFR 2.390

Figure 3J-1 R/B Structural Drawings (Sheet 13 of 14)

Security-Related Information – Withheld Under 10 CFR 2.390

Figure 3J-1 R/B Structural Drawings (Sheet 14 of 14)

Security-Related Information – Withheld Under 10 CFR 2.390

Figure 3J-2 Containment Internal Structure Drawings (Sheet 1 of 10)

Security-Related Information – Withheld Under 10 CFR 2.390

Figure 3J-2 Containment Internal Structure Drawings (Sheet 2 of 10)

Security-Related Information – Withheld Under 10 CFR 2.390

Figure 3J-2 Containment Internal Structure Drawings (Sheet 3 of 10)

Security-Related Information – Withheld Under 10 CFR 2.390

Figure 3J-2 Containment Internal Structure Drawings (Sheet 4 of 10)

Security-Related Information – Withheld Under 10 CFR 2.390

Figure 3J-2 Containment Internal Structure Drawings (Sheet 5 of 10)

Security-Related Information – Withheld Under 10 CFR 2.390

Figure 3J-2 Containment Internal Structure Drawings (Sheet 6 of 10)

Security-Related Information – Withheld Under 10 CFR 2.390

Figure 3J-2 Containment Internal Structure Drawings (Sheet 7 of 10)

Security-Related Information – Withheld Under 10 CFR 2.390

Figure 3J-2 Containment Internal Structure Drawings (Sheet 8 of 10)

Security-Related Information – Withheld Under 10 CFR 2.390

Figure 3J-2 Containment Internal Structure Drawings (Sheet 9 of 10)

Security-Related Information – Withheld Under 10 CFR 2.390

Figure 3J-2 Containment Internal Structure Drawings (Sheet 10 of 10)

Security-Related Information – Withheld Under 10 CFR 2.390

Figure 3J-3 PS/B East Structural Drawings (Sheet 1 of 3)

Security-Related Information – Withheld Under 10 CFR 2.390

Figure 3J-3 PS/B East Structural Drawings (Sheet 2 of 3)

Security-Related Information – Withheld Under 10 CFR 2.390

Figure 3J-3 PS/B East Structural Drawings (Sheet 3 of 3)

Security-Related Information – Withheld Under 10 CFR 2.390

Figure 3J-4 PS/B West Structural Drawings (Sheet 1 of 3)

Security-Related Information – Withheld Under 10 CFR 2.390

Figure 3J-4 PS/B West Structural Drawings (Sheet 2 of 3)

Security-Related Information – Withheld Under 10 CFR 2.390

Figure 3J-4 PS/B West Structural Drawings (Sheet 3 of 3)

Security-Related Information – Withheld Under 10 CFR 2.390

Figure 3J-5 Essential Service Water Pipe Chase Structural Drawings (Sheet 1 of 3)

Security-Related Information – Withheld Under 10 CFR 2.390

Figure 3J-5 Essential Service Water Pipe Chase Structural Drawings (Sheet 2 of 3)

Security-Related Information – Withheld Under 10 CFR 2.390

Figure 3J-5 Essential Service Water Pipe Chase Structural Drawings (Sheet 3 of 3)

APPENDIX 3K

COMPONENTS PROTECTED FROM INTERNAL FLOODING

CONTENTS

Page

3K Components Protected From Internal Flooding 3K-1

3K.1 Introduction 3K-1

TABLES

Page

Table 3K-1 PCCV Components Protected From Internal Flooding.....3K-2

Table 3K-2 R/B RCA Components Protected From Internal Flooding.....3K-23

Table 3K-3 R/B NRCA Components Protected From Internal Flooding 3K-45

Table 3K-4 PS/B Components Protected From Internal Flooding 3K-73

FIGURES

Page

Figure 3K-1 Location of Watertight Doors and Flood Barrier Walls R/B Plan View Elevation -26'-4" 3K-82

Figure 3K-2 Location of Watertight Doors and Flood Barrier Walls R/B Plan View Elevation -8'-7" 3K-83

Figure 3K-3 Location of Watertight Doors and Flood Barrier Walls R/B Plan View Elevation 3'-7" 3K-84

Figure 3K-4 Location of Watertight Doors and Flood Barrier Walls R/B Plan View Elevation 13'-6" 3K-85

Figure 3K-5 Location of Watertight Doors and Flood Barrier Walls R/B Plan View Elevation 25'-3" 3K-86

Figure 3K-6 Location of Watertight Doors and Flood Barrier Walls R/B Plan View Elevation 35'-2" 3K-87

Figure 3K-7 Location of Watertight Doors and Flood Barrier Walls R/B Plan View Elevation 50'-2" 3K-88

Figure 3K-8 Location of Watertight Doors and Flood Barrier Walls R/B Plan View Elevation 76'-5" 3K-89

Figure 3K-9 Location of Watertight Doors and Flood Barrier Walls R/B Plan View Elevation 101'-0" 3K-90

Figure 3K-10 Location of Watertight Doors and Flood Barrier Walls R/B Plan View Elevation 115'-6" 3K-91

Figure 3K-11 Location of Watertight Doors and Flood Barrier Walls PS/Bs Plan View Elevation -26'-4", -14'-2" 3K-92

Figure 3K-12 Location of Watertight Doors and Flood Barrier Walls PS/Bs Plan View Elevation 3'-7", 24'-2", 39'-6" 3K-93

ACRONYMS AND ABBREVIATIONS

NRCA	non-radiological controlled area
PCCV	prestressed concrete containment vessel
PS/B	power source building
R/B	reactor building
RCA	radiological controlled area

3K Components Protected From Internal Flooding

3K.1 Introduction

This appendix provides the location of components within safety-related buildings of the US-APWR, in comparison to the maximum internal flood elevation within the vicinity of the component.

Table 3K-1 provides a list of components, identified by Equipment Tag, that are located in the prestressed concrete containment vessel (PCCV). Each component is located by floor elevation, fire zone number, and the elevation above the floor. The applicable flood elevation is identified, and a note is provided for any components below the flood elevation to indicate the component's capability to perform their intended safety function in the event of flooding.

Table 3K-2 provides a list of components, identified by Equipment Tag, that are located in the radiological controlled area (RCA) of the reactor building (R/B). Each component is located by floor elevation, side of building, fire zone number, and the elevation above the floor. The applicable flood elevation is identified, and a note is provided for any components below the flood elevation to indicate the component's capability to perform their intended safety function in the event of flooding.

Table 3K-3 provides a list of components, identified by Equipment Tag, that are located in the non-radiological controlled area (NRCA) of the R/B. Each component is located by floor elevation, side of building, fire zone number, and the elevation above the floor. The applicable flood elevation is identified, and a note is provided for any components below the flood elevation to indicate the component's capability to perform their intended safety function in the event of flooding.

Table 3K-4 provides a list of components, identified by Equipment Tag, that are located in either power source building (PS/B). Each component is located by floor elevation, as east (E) or west (W) PS/B, fire zone number, and the elevation above the floor. The applicable flood elevation is identified, and a note is provided for any components below the flood elevation to indicate the component's capability to perform their intended safety function in the event of flooding.

Figure 3K-1 through 10 provides the location of watertight doors and flood barrier walls that are located in the R/B.

Figure 3K-11 and 12 provides the location of watertight doors and flood barrier walls that are located in either PS/B.

Table 3K-1 PCCV Components Protected From Internal Flooding (Sheet 1 of 20)

Item No.	Equipment Tag	Description	Location of SSCs					Notes
			Building	Side	Floor Elevation	Fire Zone No.	SSC Level Relative to the Flood Elevation (EL. 25'-3")	
1	RCS-MTK-001	Reactor Vessel	PCCV	N/A	-9'-2"	FA1-103-03	below	1
2	RCS-MHX-001A	A-Steam Generator	PCCV	N/A	25'-3"	FA1-101-11	above	
3	RCS-MHX-001B	B-Steam Generator	PCCV	N/A	25'-3"	FA1-101-08	above	
4	RCS-MHX-001C	C-Steam Generator	PCCV	N/A	25'-3"	FA1-101-09	above	
5	RCS-MHX-001D	D-Steam Generator	PCCV	N/A	25'-3"	FA1-101-10	above	
6	RCS-MTK-002	Pressurizer	PCCV	N/A	58'-5"	FA1-101-21	above	
7	RCS-MPP-001A	A-Reactor Coolant Pump	PCCV	Naa /A	25'-3"	FA1-101-11	above	
8	RCS-MPP-001B	B-Reactor Coolant Pump	PCCV	N/A	25'-3"	FA1-101-08	above	
9	RCS-MPP-001C	C-Reactor Coolant Pump	PCCV	N/A	25'-3"	FA1-101-09	above	
10	RCS-MPP-001D	D-Reactor Coolant Pump	PCCV	N/A	25'-3"	FA1-101-10	above	
11	RCS-VLV-120	A-Pressurizer Safety Valve	PCCV	N/A	58'-5"	FA1-101-21	above	
12	RCS-VLV-121	B-Pressurizer Safety Valve	PCCV	N/A	58'-5"	FA1-101-21	above	
13	RCS-VLV-122	C-Pressurizer Safety Valve	PCCV	N/A	58'-5"	FA1-101-21	above	
14	RCS-VLV-123	D-Pressurizer Safety Valve	PCCV	N/A	58'-5"	FA1-101-21	above	
15	RCS-MOV-002A	Motor Operated Valve	PCCV	N/A	76'-5"	FA1-101-24	above	
16	RCS-MOV-002B	Motor Operated Valve	PCCV	N/A	76'-5"	FA1-101-24	above	
17	RCS-MOV-003A	Motor Operated Valve	PCCV	N/A	76'-5"	FA1-101-24	above	
18	RCS-MOV-003B	Motor Operated Valve	PCCV	N/A	76'-5"	FA1-101-24	above	
19	RCS-MOV-111A	Motor Operated Valve	PCCV	N/A	50'-2"	FA1-101-15	above	
20	RCS-MOV-111B	Motor Operated Valve	PCCV	N/A	50'-2"	FA1-101-16	above	

Table 3K-1 PCCV Components Protected From Internal Flooding (Sheet 2 of 20)

Item No.	Equipment Tag	Description	Location of SSCs					Notes
			Building	Side	Floor Elevation	Fire Zone No.	SSC Level Relative to the Flood Elevation (EL. 25'-3")	
21	RCS-MOV-116A	Motor Operated Valve	PCCV	N/A	58'-5"	FA1-101-21	above	
22	RCS-MOV-116B	Motor Operated Valve	PCCV	N/A	58'-5"	FA1-101-21	above	
23	RCS-MOV-117A	A-Safety Depressurization Valve	PCCV	N/A	58'-5"	FA1-101-21	above	
24	RCS-MOV-117B	B-Safety Depressurization Valve	PCCV	N/A	58'-5"	FA1-101-21	above	
25	RCS-MOV-118	Motor Operated Valve	PCCV	N/A	58'-5"	FA1-101-21	above	
26	RCS-MOV-119	Depressurization Valve	PCCV	N/A	58'-5"	FA1-101-21	above	
27	RCS-PCV-061A	A-Pressurizer Spray Valve	PCCV	N/A	50'-2"	FA1-101-15	above	
28	RCS-PCV-061B	B-Pressurizer Spray Valve	PCCV	N/A	50'-2"	FA1-101-16	above	
29	RCS-AOV-147	Air Operated Valve	PCCV	N/A	25'-3"	FA1-101-06	above	
30	CVS-MOV-203	Motor Operated Valve	PCCV	N/A	25'-3"	FA1-101-06	above	
31	CVS-AOV-005	Air Operated Valve	PCCV	N/A	25'-3"	FA1-101-06	above	
32	CVS-AOV-155	Air Operated Valve	PCCV	N/A	25'-3"	FA1-101-09	above	
33	CVS-AOV-159	Air Operated Valve	PCCV	N/A	50'-2"	FA1-101-20	above	
34	CVS-LCV-361	Level Control Valve	PCCV	N/A	25'-3"	FA1-101-10	above	
35	CVS-LCV-362	Level Control Valve	PCCV	N/A	25'-3"	FA1-101-10	above	
36	CVS-AOV-192A	Air Operated Valve	PCCV	N/A	25'-3"	FA1-101-11	above	
37	CVS-AOV-192B	Air Operated Valve	PCCV	N/A	25'-3"	FA1-101-08	above	
38	CVS-AOV-221	Air Operated Valve	PCCV	N/A	25'-3"	FA1-101-11	above	
39	CVS-AOV-222	Air Operated Valve	PCCV	N/A	25'-3"	FA1-101-11	above	
40	CVS-AOV-192C	Air Operated Valve	PCCV	N/A	25'-3"	FA1-101-09	above	

Table 3K-1 PCCV Components Protected From Internal Flooding (Sheet 3 of 20)

Item No.	Equipment Tag	Description	Location of SSCs					Notes
			Building	Side	Floor Elevation	Fire Zone No.	SSC Level Relative to the Flood Elevation (EL. 25'-3")	
41	CVS-AOV-192D	Air Operated Valve	PCCV	N/A	25'-3"	FA1-101-10	above	
42	CVS-AOV-196A	Air Operated Valve	PCCV	N/A	25'-3"	FA1-101-11	above	
43	CVS-AOV-196B	Air Operated Valve	PCCV	N/A	25'-3"	FA1-101-08	above	
44	CVS-AOV-196C	Air Operated Valve	PCCV	N/A	25'-3"	FA1-101-09	above	
45	CVS-AOV-196D	Air Operated Valve	PCCV	N/A	25'-3"	FA1-101-10	above	
46	SIS-MTK-001A	A-Accumulator	PCCV	N/A	25'-3"	FA1-101-07	above	
47	SIS-MTK-001B	B-Accumulator	PCCV	N/A	25'-3"	FA1-101-04	above	
48	SIS-MTK-001C	C-Accumulator	PCCV	N/A	25'-3"	FA1-101-05	above	
49	SIS-MTK-001D	D-Accumulator	PCCV	N/A	25'-3"	FA1-101-06	above	
50	SIS-MOV-011A	Motor Operated Valve	PCCV	N/A	25'-3"	FA1-101-07	above	
51	SIS-MOV-011B	Motor Operated Valve	PCCV	N/A	25'-3"	FA1-101-04	above	
52	SIS-MOV-014A	Motor Operated Valve	PCCV	N/A	25'-3"	FA1-101-07	above	
53	SIS-MOV-014B	Motor Operated Valve	PCCV	N/A	25'-3"	FA1-101-04	above	
54	SIS-MOV-031A	Motor Operated Valve	PCCV	N/A	25'-3"	FA1-101-11	above	
55	SIS-MOV-032A	Motor Operated Valve	PCCV	N/A	25'-3"	FA1-101-11	above	
56	SIS-MOV-011C	Motor Operated Valve	PCCV	N/A	25'-3"	FA1-101-05	above	
57	SIS-MOV-011D	Motor Operated Valve	PCCV	N/A	25'-3"	FA1-101-06	above	
58	SIS-MOV-014C	Motor Operated Valve	PCCV	N/A	25'-3"	FA1-101-05	above	
59	SIS-MOV-014D	Motor Operated Valve	PCCV	N/A	25'-3"	FA1-101-06	above	
60	SIS-MOV-024A	Motor Operated Valve	PCCV	N/A	25'-3"	FA1-101-07	above	

Table 3K-1 PCCV Components Protected From Internal Flooding (Sheet 4 of 20)

Item No.	Equipment Tag	Description	Location of SSCs					Notes
			Building	Side	Floor Elevation	Fire Zone No.	SSC Level Relative to the Flood Elevation (EL. 25'-3")	
61	SIS-MOV-024B	Motor Operated Valve	PCCV	N/A	25'-3"	FA1-101-04	above	
62	SIS-MOV-024C	Motor Operated Valve	PCCV	N/A	25'-3"	FA1-101-05	above	
63	SIS-MOV-024D	Motor Operated Valve	PCCV	N/A	25'-3"	FA1-101-06	above	
64	SIS-MOV-031D	Motor Operated Valve	PCCV	N/A	25'-3"	FA1-101-10	above	
65	SIS-MOV-032D	Motor Operated Valve	PCCV	N/A	25'-3"	FA1-101-10	above	
66	SIS-MOV-121A	Motor Operated Valve	PCCV	N/A	50'-2"	FA1-101-17	above	
67	SIS-MOV-121B	Motor Operated Valve	PCCV	N/A	50'-2"	FA1-101-17	above	
68	SIS-MOV-125A	Motor Operated Valve	PCCV	N/A	50'-2"	FA1-101-18	above	
69	SIS-MOV-125B	Motor Operated Valve	PCCV	N/A	50'-2"	FA1-101-15	above	
70	SIS-MOV-125C	Motor Operated Valve	PCCV	N/A	50'-2"	FA1-101-16	above	
71	SIS-MOV-125D	Motor Operated Valve	PCCV	N/A	50'-2"	FA1-101-17	above	
72	SIS-MOV-101A	Motor Operated Valve	PCCV	N/A	25'-3"	FA1-101-07	above	
73	SIS-MOV-101B	Motor Operated Valve	PCCV	N/A	25'-3"	FA1-101-04	above	
74	SIS-MOV-101C	Motor Operated Valve	PCCV	N/A	25'-3"	FA1-101-05	above	
75	SIS-MOV-101D	Motor Operated Valve	PCCV	N/A	25'-3"	FA1-101-06	above	
76	SIS-VLV-116	Safety Valve	PCCV	N/A	25'-3"	FA1-101-04	above	
77	SIS-VLV-126A	Safety Valve	PCCV	N/A	50'-2"	FA1-101-18	above	
78	SIS-VLV-126B	Safety Valve	PCCV	N/A	50'-2"	FA1-101-15	above	
79	SIS-VLV-126C	Safety Valve	PCCV	N/A	50'-2"	FA1-101-16	above	
80	SIS-VLV-126D	Safety Valve	PCCV	N/A	50'-2"	FA1-101-17	above	

Table 3K-1 PCCV Components Protected From Internal Flooding (Sheet 5 of 20)

Item No.	Equipment Tag	Description	Location of SSCs					Notes
			Building	Side	Floor Elevation	Fire Zone No.	SSC Level Relative to the Flood Elevation (EL. 25'-3")	
81	SIS-HCV-017	Air Operated Valve	PCCV	N/A	50'-2"	FA1-101-17	above	
82	SIS-AOV-215A	Air Operated Valve	PCCV	N/A	25'-3"	FA1-101-07	above	
83	SIS-AOV-215B	Air Operated Valve	PCCV	N/A	25'-3"	FA1-101-04	above	
84	SIS-AOV-215C	Air Operated Valve	PCCV	N/A	25'-3"	FA1-101-05	above	
85	SIS-AOV-215D	Air Operated Valve	PCCV	N/A	25'-3"	FA1-101-06	above	
86	SIS-AOV-201B	Air Operated Valve	PCCV	N/A	25'-3"	FA1-101-05	above	
87	SIS-AOV-201C	Air Operated Valve	PCCV	N/A	25'-3"	FA1-101-05	above	
88	RHS-MOV-001A	Motor Operated Valve	PCCV	N/A	25'-3"	FA1-101-11	above	
89	RHS-MOV-001B	Motor Operated Valve	PCCV	N/A	25'-3"	FA1-101-08	above	
90	RHS-MOV-002A	Motor Operated Valve	PCCV	N/A	25'-3"	FA1-101-07	above	
91	RHS-MOV-002B	Motor Operated Valve	PCCV	N/A	25'-3"	FA1-101-04	above	
92	RHS-MOV-025A	Motor Operated Valve	PCCV	N/A	25'-3"	FA1-101-07	above	
93	RHS-MOV-025B	Motor Operated Valve	PCCV	N/A	25'-3"	FA1-101-04	above	
94	RHS-MOV-026A	Motor Operated Valve	PCCV	N/A	25'-3"	FA1-101-07	above	
95	RHS-MOV-026B	Motor Operated Valve	PCCV	N/A	25'-3"	FA1-101-04	above	
96	RHS-AOV-024B	Air Operated Valve	PCCV	N/A	25'-3"	FA1-101-04	above	
97	RHS-MOV-001C	Motor Operated Valve	PCCV	N/A	25'-3"	FA1-101-09	above	
98	RHS-MOV-001D	Motor Operated Valve	PCCV	N/A	25'-3"	FA1-101-10	above	
99	RHS-MOV-002C	Motor Operated Valve	PCCV	N/A	25'-3"	FA1-101-05	above	
100	RHS-MOV-002D	Motor Operated Valve	PCCV	N/A	25'-3"	FA1-101-06	above	

Table 3K-1 PCCV Components Protected From Internal Flooding (Sheet 6 of 20)

Item No.	Equipment Tag	Description	Location of SSCs					Notes
			Building	Side	Floor Elevation	Fire Zone No.	SSC Level Relative to the Flood Elevation (EL. 25'-3")	
101	RHS-MOV-025C	Motor Operated Valve	PCCV	N/A	25'-3"	FA1-101-05	above	
102	RHS-MOV-025D	Motor Operated Valve	PCCV	N/A	25'-3"	FA1-101-06	above	
103	RHS-MOV-026C	Motor Operated Valve	PCCV	N/A	25'-3"	FA1-101-05	above	
104	RHS-MOV-026D	Motor Operated Valve	PCCV	N/A	25'-3"	FA1-101-06	above	
105	RHS-AOV-024C	Air Operated Valve	PCCV	N/A	25'-3"	FA1-101-05	above	
106	RHS-VLV-003A	Safety Valve	PCCV	N/A	25'-3"	FA1-101-07	above	
107	RHS-VLV-003B	Safety Valve	PCCV	N/A	25'-3"	FA1-101-04	above	
108	RHS-VLV-003C	Safety Valve	PCCV	N/A	25'-3"	FA1-101-05	above	
109	RHS-VLV-003D	Safety Valve	PCCV	N/A	25'-3"	FA1-101-06	above	
110	RHS-VLV-023A	Safety Valve	PCCV	N/A	25'-3"	FA1-101-07	above	
111	RHS-VLV-023B	Safety Valve	PCCV	N/A	25'-3"	FA1-101-04	above	
112	RHS-VLV-023C	Safety Valve	PCCV	N/A	25'-3"	FA1-101-05	above	
113	RHS-VLV-023D	Safety Valve	PCCV	N/A	25'-3"	FA1-101-06	above	
114	CSS-SNZ-001	Spray Nozzle	PCCV	N/A	76'-5"	FA1-101-26	above	
115	CSS-SNZ-001	Spray Nozzle	PCCV	N/A	76'-5"	FA1-101-23	above	
116	CSS-SNZ-001	Spray Nozzle	PCCV	N/A	76'-5"	FA1-101-24	above	
117	CSS-SNZ-001	Spray Nozzle	PCCV	N/A	76'-5"	FA1-101-25	above	
118	NCS-MOV-436B	Motor Operated Valve	PCCV	N/A	25'-3"	FA1-101-05	above	
119	NCS-VLV-406A	Safety Valve	PCCV	N/A	25'-3"	FA1-101-07	above	
120	NCS-VLV-406B	Safety Valve	PCCV	N/A	25'-3"	FA1-101-04	above	

Table 3K-1 PCCV Components Protected From Internal Flooding (Sheet 7 of 20)

Item No.	Equipment Tag	Description	Location of SSCs					Notes
			Building	Side	Floor Elevation	Fire Zone No.	SSC Level Relative to the Flood Elevation (EL. 25'-3")	
121	NCS-VLV-406C	Safety Valve	PCCV	N/A	25'-3"	FA1-101-05	above	
122	NCS-VLV-406D	Safety Valve	PCCV	N/A	25'-3"	FA1-101-06	above	
123	NCS-VLV-435A	Safety Valve	PCCV	N/A	25'-3"	FA1-101-04	above	
124	NCS-VLV-435B	Safety Valve	PCCV	N/A	25'-3"	FA1-101-05	above	
125	NCS-MOV-436A	Motor Operated Valve	PCCV	N/A	25'-3"	FA1-101-04	above	
126	NCS-FCV-131A	Flow Control Valve	PCCV	N/A	25'-3"	FA1-101-05	above	
127	NCS-FCV-131B	Flow Control Valve	PCCV	N/A	25'-3"	FA1-101-05	above	
128	NCS-TCV-013	Temperature Control Valve	PCCV	N/A	50'-2"	FA1-101-16	above	
129	NCS-FCV-129A	Flow Control Valve	PCCV	N/A	25'-3"	FA1-101-07	above	
130	NCS-FCV-129B	Flow Control Valve	PCCV	N/A	25'-3"	FA1-101-07	above	
131	NCS-MOV-446A	Motor Operated Valve	PCCV	N/A	50'-2"	FA1-101-18	above	
132	NCS-MOV-446B	Motor Operated Valve	PCCV	N/A	50'-2"	FA1-101-15	above	
133	NCS-MOV-446C	Motor Operated Valve	PCCV	N/A	50'-2"	FA1-101-16	above	
134	NCS-MOV-446D	Motor Operated Valve	PCCV	N/A	50'-2"	FA1-101-17	above	
135	NCS-FCV-130A	Flow Control Valve	PCCV	N/A	25'-3"	FA1-101-04	above	
136	NCS-FCV-130B	Flow Control Valve	PCCV	N/A	25'-3"	FA1-101-04	above	
137	NCS-FCV-132A	Flow Control Valve	PCCV	N/A	25'-3"	FA1-101-06	above	
138	NCS-FCV-132B	Flow Control Valve	PCCV	N/A	25'-3"	FA1-101-06	above	
139	NCS-VLV-513	Safety Valve	PCCV	N/A	50'-2"	FA1-101-18	above	
140	NCS-VLV-533	Safety Valve	PCCV	N/A	50'-2"	FA1-101-16	above	

Table 3K-1 PCCV Components Protected From Internal Flooding (Sheet 8 of 20)

Item No.	Equipment Tag	Description	Location of SSCs					Notes
			Building	Side	Floor Elevation	Fire Zone No.	SSC Level Relative to the Flood Elevation (EL. 25'-3")	
141	LMS-AOV-052	Air Operated Valve	PCCV	N/A	25'-3"	FA1-101-06	above	
142	LMS-AOV-055	Air Operated Valve	PCCV	N/A	25'-3"	FA1-101-06	above	
143	LMS-LCV-010A	Level Control Valve	PCCV	N/A	25'-3"	FA1-101-07	above	
144	LMS-AOV-104	Air Operated Valve	PCCV	N/A	25'-3"	FA1-101-07	above	
145	PSS-AOV-003	Air Operated Valve	PCCV	N/A	25'-3"	FA1-101-05	above	
146	PSS-MOV-006	Motor Operated Valve	PCCV	N/A	25'-3"	FA1-101-05	above	
147	PSS-MOV-013	Motor Operated Valve	PCCV	N/A	25'-3"	FA1-101-06	above	
148	PSS-MOV-023	Motor Operated Valve	PCCV	N/A	25'-3"	FA1-101-06	above	
149	PSS-AOV-062A	Air Operated Valve	PCCV	N/A	25'-3"	FA1-101-05	above	
150	PSS-AOV-062B	Air Operated Valve	PCCV	N/A	25'-3"	FA1-101-06	above	
151	PSS-AOV-062C	Air Operated Valve	PCCV	N/A	25'-3"	FA1-101-06	above	
152	PSS-AOV-062D	Air Operated Valve	PCCV	N/A	25'-3"	FA1-101-06	above	
153	RWS-MPT-001	Refueling Water Storage Pit	PCCV	N/A	3'-7"	-	0	2
154	RWS-MOV-002	Motor Operated Valve	PCCV	N/A	25'-3"	FA1-101-07	above	
155	RWS-MOV-001	Motor Operated Valve	PCCV	N/A	25'-3"	FA1-101-06	above	
156	VCS-AOV-305	Air Operated Valve	PCCV	N/A	76'-5"	FA1-101-23	above	
157	VCS-AOV-306	Air Operated Valve	PCCV	N/A	76'-5"	FA1-101-25	above	
158	VCS-AOV-355	Air Operated Valve	PCCV	N/A	76'-5"	FA1-101-23	above	
159	VCS-AOV-356	Air Operated Valve	PCCV	N/A	76'-5"	FA1-101-25	above	
160		Containment Electrical Penetration	PCCV	N/A	50'-2"	FA1-101-18	above	

Table 3K-1 PCCV Components Protected From Internal Flooding (Sheet 9 of 20)

Item No.	Equipment Tag	Description	Location of SSCs					Notes
			Building	Side	Floor Elevation	Fire Zone No.	SSC Level Relative to the Flood Elevation (EL. 25'-3")	
161		Containment Electrical Penetration	PCCV	N/A	50'-2"	FA1-101-15	above	
162		Containment Electrical Penetration	PCCV	N/A	50'-2"	FA1-101-16	above	
163		Containment Electrical Penetration	PCCV	N/A	50'-2"	FA1-101-17	above	
164		Containment Electrical Penetration	PCCV	N/A	76'-5"	FA1-101-23	above	
165		Containment Electrical Penetration	PCCV	N/A	76'-5"	FA1-101-24	above	
166	RCS-FT-022	Loop A - Reactor Coolant Flow	PCCV	N/A	25'-3"	FA1-101-07	above	
167	RCS-FT-023	Loop A - Reactor Coolant Flow	PCCV	N/A	25'-3"	FA1-101-07	above	
168	RCS-FT-024	Loop A - Reactor Coolant Flow	PCCV	N/A	25'-3"	FA1-101-07	above	
169	RCS-FT-025	Loop A - Reactor Coolant Flow	PCCV	N/A	25'-3"	FA1-101-07	above	
170	RCS-FT-032	Loop B - Reactor Coolant Flow	PCCV	N/A	25'-3"	FA1-101-04	above	
171	RCS-FT-033	Loop B - Reactor Coolant Flow	PCCV	N/A	25'-3"	FA1-101-04	above	
172	RCS-FT-034	Loop B - Reactor Coolant Flow	PCCV	N/A	25'-3"	FA1-101-04	above	
173	RCS-FT-035	Loop B - Reactor Coolant Flow	PCCV	N/A	25'-3"	FA1-101-04	above	
174	RCS-FT-042	Loop C - Reactor Coolant Flow	PCCV	N/A	25'-3"	FA1-101-05	above	
175	RCS-FT-043	Loop C - Reactor Coolant Flow	PCCV	N/A	25'-3"	FA1-101-05	above	
176	RCS-FT-044	Loop C - Reactor Coolant Flow	PCCV	N/A	25'-3"	FA1-101-05	above	
177	RCS-FT-045	Loop C - Reactor Coolant Flow	PCCV	N/A	25'-3"	FA1-101-05	above	
178	RCS-FT-052	Loop D - Reactor Coolant Flow	PCCV	N/A	25'-3"	FA1-101-06	above	

Table 3K-1 PCCV Components Protected From Internal Flooding (Sheet 10 of 20)

Item No.	Equipment Tag	Description	Location of SSCs					Notes
			Building	Side	Floor Elevation	Fire Zone No.	SSC Level Relative to the Flood Elevation (EL. 25'-3")	
179	RCS-FT-053	Loop D - Reactor Coolant Flow	PCCV	N/A	25'-3"	FA1-101-06	above	
180	RCS-FT-054	Loop D - Reactor Coolant Flow	PCCV	N/A	25'-3"	FA1-101-06	above	
181	RCS-FT-055	Loop D - Reactor Coolant Flow	PCCV	N/A	25'-3"	FA1-101-06	above	
182	RCS-LT-061	Pressurizer Water Level	PCCV	N/A	50'-2"	FA1-101-16	above	
183	RCS-LT-062	Pressurizer Water Level	PCCV	N/A	50'-2"	FA1-101-16	above	
184	RCS-LT-063	Pressurizer Water Level	PCCV	N/A	50'-2"	FA1-101-15	above	
185	RCS-LT-064	Pressurizer Water Level	PCCV	N/A	50'-2"	FA1-101-15	above	
186	RCS-PT-020	Loop A - Reactor Coolant Pressure	PCCV	N/A	25'-3"	FA1-101-07	above	
187	RCS-PT-030	Loop B - Reactor Coolant Pressure	PCCV	N/A	25'-3"	FA1-101-04	above	
188	RCS-PT-040	Loop C - Reactor Coolant Pressure	PCCV	N/A	25'-3"	FA1-101-05	above	
189	RCS-PT-050	Loop D - Reactor Coolant Pressure	PCCV	N/A	25'-3"	FA1-101-06	above	
190	RCS-PT-061	Pressurizer Pressure	PCCV	N/A	76'-5"	FA1-101-24	above	
191	RCS-PT-062	Pressurizer Pressure	PCCV	N/A	76'-5"	FA1-101-24	above	
192	RCS-PT-063	Pressurizer Pressure	PCCV	N/A	76'-5"	FA1-101-24	above	
193	RCS-PT-064	Pressurizer Pressure	PCCV	N/A	76'-5"	FA1-101-24	above	
194	SIS-FT-072	A - Safety Injection Pump Minimum Flow	PCCV	N/A	25'-3"	FA1-101-07	above	
195	SIS-FT-073	B - Safety Injection Pump Minimum Flow	PCCV	N/A	25'-3"	FA1-101-04	above	

Table 3K-1 PCCV Components Protected From Internal Flooding (Sheet 11 of 20)

Item No.	Equipment Tag	Description	Location of SSCs					Notes
			Building	Side	Floor Elevation	Fire Zone No.	SSC Level Relative to the Flood Elevation (EL. 25'-3")	
196	SIS-FT-074	C - Safety Injection Pump Minimum Flow	PCCV	N/A	25'-3"	FA1-101-05	above	
197	SIS-FT-075	D - Safety Injection Pump Minimum Flow	PCCV	N/A	25'-3"	FA1-101-06	above	
198	SIS-LT-010	A - Accumulator Water Level	PCCV	N/A	25'-3"	FA1-101-07	above	
199	SIS-LT-020	B - Accumulator Water Level	PCCV	N/A	25'-3"	FA1-101-04	above	
200	SIS-LT-030	C - Accumulator Water Level	PCCV	N/A	25'-3"	FA1-101-05	above	
201	SIS-LT-040	D - Accumulator Water Level	PCCV	N/A	25'-3"	FA1-101-06	above	
202	SIS-PT-010	A - Accumulator Pressure	PCCV	N/A	25'-3"	FA1-101-07	above	
203	SIS-PT-020	B - Accumulator Pressure	PCCV	N/A	25'-3"	FA1-101-04	above	
204	SIS-PT-030	C - Accumulator Pressure	PCCV	N/A	25'-3"	FA1-101-05	above	
205	SIS-PT-040	D - Accumulator Pressure	PCCV	N/A	25'-3"	FA1-101-06	above	
206	FWS-LT-510	A - Steam Generator Water Level (Narrow Range)	PCCV	N/A	76'-5"	FA1-101-26	above	
207	FWS-LT-511	A - Steam Generator Water Level (Narrow Range)	PCCV	N/A	76'-5"	FA1-101-26	above	
208	FWS-LT-512	A - Steam Generator Water Level (Narrow Range)	PCCV	N/A	76'-5"	FA1-101-26	above	
209	FWS-LT-513	A - Steam Generator Water Level (Narrow Range)	PCCV	N/A	76'-5"	FA1-101-26	above	
210	FWS-LT-514	A - Steam Generator Water Level (Wide Range)	PCCV	N/A	76'-5"	FA1-101-26	above	
211	FWS-LT-520	B - Steam Generator Water Level (Narrow Range)	PCCV	N/A	76'-5"	FA1-101-23	above	

Table 3K-1 PCCV Components Protected From Internal Flooding (Sheet 12 of 20)

Item No.	Equipment Tag	Description	Location of SSCs					Notes
			Building	Side	Floor Elevation	Fire Zone No.	SSC Level Relative to the Flood Elevation (EL. 25'-3")	
212	FWS-LT-521	B - Steam Generator Water Level (Narrow Range)	PCCV	N/A	76'-5"	FA1-101-23	above	
213	FWS-LT-522	B - Steam Generator Water Level (Narrow Range)	PCCV	N/A	76'-5"	FA1-101-23	above	
214	FWS-LT-523	B - Steam Generator Water Level (Narrow Range)	PCCV	N/A	76'-5"	FA1-101-23	above	
215	FWS-LT-524	B - Steam Generator Water Level (Wide Range)	PCCV	N/A	76'-5"	FA1-101-23	above	
216	FWS-LT-530	C - Steam Generator Water Level (Narrow Range)	PCCV	N/A	76'-5"	FA1-101-24	above	
217	FWS-LT-531	C - Steam Generator Water Level (Narrow Range)	PCCV	N/A	76'-5"	FA1-101-24	above	
218	FWS-LT-532	C - Steam Generator Water Level (Narrow Range)	PCCV	N/A	76'-5"	FA1-101-24	above	
219	FWS-LT-533	C - Steam Generator Water Level (Narrow Range)	PCCV	N/A	76'-5"	FA1-101-24	above	
220	FWS-LT-534	C - Steam Generator Water Level (Wide Range)	PCCV	N/A	76'-5"	FA1-101-24	above	
221	FWS-LT-540	D - Steam Generator Water Level (Narrow Range)	PCCV	N/A	76'-5"	FA1-101-25	above	
222	FWS-LT-541	D - Steam Generator Water Level (Narrow Range)	PCCV	N/A	76'-5"	FA1-101-25	above	
223	FWS-LT-542	D - Steam Generator Water Level (Narrow Range)	PCCV	N/A	76'-5"	FA1-101-25	above	
224	FWS-LT-543	D - Steam Generator Water Level (Narrow Range)	PCCV	N/A	76'-5"	FA1-101-25	above	

Table 3K-1 PCCV Components Protected From Internal Flooding (Sheet 13 of 20)

Item No.	Equipment Tag	Description	Location of SSCs					Notes
			Building	Side	Floor Elevation	Fire Zone No.	SSC Level Relative to the Flood Elevation (EL. 25'-3")	
225	FWS-LT-544	D - Steam Generator Water Level (Wide Range)	PCCV	N/A	76'-5"	FA1-101-25	above	
226	RWS-LT-010	Refueling Water Storage Pit Water Level (Narrow Range)	PCCV	N/A	25'-3"	FA1-101-07	above	
227	RWS-LT-011	Refueling Water Storage Pit Water Level (Wide Range)	PCCV	N/A	25'-3"	FA1-101-07	above	
228	RWS-LT-012	Refueling Water Storage Pit Water Level (Narrow Range)	PCCV	N/A	25'-3"	FA1-101-06	above	
229	RWS-LT-013	Refueling Water Storage Pit Water Level (Wide Range)	PCCV	N/A	25'-3"	FA1-101-06	above	
230	RCS-TE-020	Loop A - Reactor Coolant Hot Leg Temperature (Wide Range)	PCCV	N/A	25'-3"	FA1-101-11	above	
231	RCS-TE-021A	Loop A - Reactor Coolant Hot Leg Temperature (Narrow Range)	PCCV	N/A	25'-3"	FA1-101-11	above	
232	RCS-TE-021B	Loop A - Reactor Coolant Hot Leg Temperature (Narrow Range)	PCCV	N/A	25'-3"	FA1-101-11	above	
233	RCS-TE-021C	Loop A - Reactor Coolant Hot Leg Temperature (Narrow Range)	PCCV	N/A	25'-3"	FA1-101-11	above	
234	RCS-TE-021D	Loop A - Reactor Coolant Cold Leg Temperature (Narrow Range)	PCCV	N/A	25'-3"	FA1-101-11	above	
235	RCS-TE-023A	Loop A - Reactor Coolant Hot Leg Temperature (Narrow Range) (spare)	PCCV	N/A	25'-3"	FA1-101-11	above	

Table 3K-1 PCCV Components Protected From Internal Flooding (Sheet 14 of 20)

Item No.	Equipment Tag	Description	Location of SSCs					Notes
			Building	Side	Floor Elevation	Fire Zone No.	SSC Level Relative to the Flood Elevation (EL. 25'-3")	
236	RCS-TE-023B	Loop A - Reactor Coolant Hot Leg Temperature (Narrow Range) (spare)	PCCV	N/A	25'-3"	FA1-101-11	above	
237	RCS-TE-023C	Loop A - Reactor Coolant Hot Leg Temperature (Narrow Range) (spare)	PCCV	N/A	25'-3"	FA1-101-11	above	
238	RCS-TE-023D	Loop A - Reactor Coolant Cold Leg Temperature (Narrow Range) (spare)	PCCV	N/A	25'-3"	FA1-101-11	above	
239	RCS-TE-025	Loop A - Reactor Coolant Cold Leg Temperature (Wide Range)	PCCV	N/A	25'-3"	FA1-101-11	above	
240	RCS-TE-030	Loop B - Reactor Coolant Hot Leg Temperature (Wide Range)	PCCV	N/A	25'-3"	FA1-101-08	above	
241	RCS-TE-031A	Loop B - Reactor Coolant Hot Leg Temperature (Narrow Range)	PCCV	N/A	25'-3"	FA1-101-08	above	
242	RCS-TE-031B	Loop B - Reactor Coolant Hot Leg Temperature (Narrow Range)	PCCV	N/A	25'-3"	FA1-101-08	above	
243	RCS-TE-031C	Loop B - Reactor Coolant Hot Leg Temperature (Narrow Range)	PCCV	N/A	25'-3"	FA1-101-08	above	
244	RCS-TE-031D	Loop B - Reactor Coolant Cold Leg Temperature (Narrow Range)	PCCV	N/A	25'-3"	FA1-101-08	above	
245	RCS-TE-033A	Loop B - Reactor Coolant Hot Leg Temperature (Narrow Range) (spare)	PCCV	N/A	25'-3"	FA1-101-08	above	

Table 3K-1 PCCV Components Protected From Internal Flooding (Sheet 15 of 20)

Item No.	Equipment Tag	Description	Location of SSCs					Notes
			Building	Side	Floor Elevation	Fire Zone No.	SSC Level Relative to the Flood Elevation (EL. 25'-3")	
246	RCS-TE-033B	Loop B - Reactor Coolant Hot Leg Temperature (Narrow Range) (spare)	PCCV	N/A	25'-3"	FA1-101-08	above	
247	RCS-TE-033C	Loop B - Reactor Coolant Hot Leg Temperature (Narrow Range) (spare)	PCCV	N/A	25'-3"	FA1-101-08	above	
248	RCS-TE-033D	Loop B - Reactor Coolant Cold Leg Temperature (Narrow Range) (spare)	PCCV	N/A	25'-3"	FA1-101-08	above	
249	RCS-TE-035	Loop B - Reactor Coolant Cold Leg Temperature (Wide Range)	PCCV	N/A	25'-3"	FA1-101-08	above	
250	RCS-TE-040	Loop C - Reactor Coolant Hot Leg Temperature (Wide Range)	PCCV	N/A	25'-3"	FA1-101-09	above	
251	RCS-TE-041A	Loop C - Reactor Coolant Hot Leg Temperature (Narrow Range)	PCCV	N/A	25'-3"	FA1-101-09	above	
252	RCS-TE-041B	Loop C - Reactor Coolant Hot Leg Temperature (Narrow Range)	PCCV	N/A	25'-3"	FA1-101-09	above	
253	RCS-TE-041C	Loop C - Reactor Coolant Hot Leg Temperature (Narrow Range)	PCCV	N/A	25'-3"	FA1-101-09	above	
254	RCS-TE-041D	Loop C - Reactor Coolant Cold Leg Temperature (Narrow Range)	PCCV	N/A	25'-3"	FA1-101-09	above	
255	RCS-TE-043A	Loop C - Reactor Coolant Hot Leg Temperature (Narrow Range) (spare)	PCCV	N/A	25'-3"	FA1-101-09	above	

Table 3K-1 PCCV Components Protected From Internal Flooding (Sheet 16 of 20)

Item No.	Equipment Tag	Description	Location of SSCs					Notes
			Building	Side	Floor Elevation	Fire Zone No.	SSC Level Relative to the Flood Elevation (EL. 25'-3")	
256	RCS-TE-043B	Loop C - Reactor Coolant Hot Leg Temperature (Narrow Range) (spare)	PCCV	N/A	25'-3"	FA1-101-09	above	
257	RCS-TE-043C	Loop C - Reactor Coolant Hot Leg Temperature (Narrow Range) (spare)	PCCV	N/A	25'-3"	FA1-101-09	above	
258	RCS-TE-043D	Loop C - Reactor Coolant Cold Leg Temperature (Narrow Range) (spare)	PCCV	N/A	25'-3"	FA1-101-09	above	
259	RCS-TE-045	Loop C - Reactor Coolant Cold Leg Temperature (Wide Range)	PCCV	N/A	25'-3"	FA1-101-09	above	
260	RCS-TE-050	Loop D - Reactor Coolant Hot Leg Temperature (Wide Range)	PCCV	N/A	25'-3"	FA1-101-10	above	
261	RCS-TE-051A	Loop D - Reactor Coolant Hot Leg Temperature (Narrow Range)	PCCV	N/A	25'-3"	FA1-101-10	above	
262	RCS-TE-051B	Loop D - Reactor Coolant Hot Leg Temperature (Narrow Range)	PCCV	N/A	25'-3"	FA1-101-10	above	
263	RCS-TE-051C	Loop D - Reactor Coolant Hot Leg Temperature (Narrow Range)	PCCV	N/A	25'-3"	FA1-101-10	above	
264	RCS-TE-051D	Loop D - Reactor Coolant Cold Leg Temperature (Narrow Range)	PCCV	N/A	25'-3"	FA1-101-10	above	
265	RCS-TE-053A	Loop D - Reactor Coolant Hot Leg Temperature (Narrow Range) (spare)	PCCV	N/A	25'-3"	FA1-101-10	above	

Table 3K-1 PCCV Components Protected From Internal Flooding (Sheet 17 of 20)

Item No.	Equipment Tag	Description	Location of SSCs					Notes
			Building	Side	Floor Elevation	Fire Zone No.	SSC Level Relative to the Flood Elevation (EL. 25'-3")	
266	RCS-TE-053B	Loop D - Reactor Coolant Hot Leg Temperature (Narrow Range) (spare)	PCCV	N/A	25'-3"	FA1-101-10	above	
267	RCS-TE-053C	Loop D - Reactor Coolant Hot Leg Temperature (Narrow Range) (spare)	PCCV	N/A	25'-3"	FA1-101-10	above	
268	RCS-TE-053D	Loop D - Reactor Coolant Cold Leg Temperature (Narrow Range) (spare)	PCCV	N/A	25'-3"	FA1-101-10	above	
269	RCS-TE-055	Loop D - Reactor Coolant Cold Leg Temperature (Wide Range)	PCCV	N/A	25'-3"	FA1-101-10	above	
270	CSS-TE-020	Containment Temperature	PCCV	N/A	76'-5"	FA1-101-26	above	
271	RCS-SE-028A	A - Reactor Coolant Pump Speed	PCCV	N/A	25'-3"	FA1-101-11	above	
272	RCS-SE-028B	A - Reactor Coolant Pump Speed (spare)	PCCV	N/A	25'-3"	FA1-101-11	above	
273	RCS-SE-038A	B - Reactor Coolant Pump Speed	PCCV	N/A	25'-3"	FA1-101-08	above	
274	RCS-SE-038B	B - Reactor Coolant Pump Speed (spare)	PCCV	N/A	25'-3"	FA1-101-08	above	
275	RCS-SE-048A	C - Reactor Coolant Pump Speed	PCCV	N/A	25'-3"	FA1-101-09	above	
276	RCS-SE-048B	C - Reactor Coolant Pump Speed (spare)	PCCV	N/A	25'-3"	FA1-101-09	above	
277	RCS-SE-058A	D - Reactor Coolant Pump Speed	PCCV	N/A	25'-3"	FA1-101-10	above	
278	RCS-SE-058B	D - Reactor Coolant Pump Speed (spare)	PCCV	N/A	25'-3"	FA1-101-10	above	

Table 3K-1 PCCV Components Protected From Internal Flooding (Sheet 18 of 20)

Item No.	Equipment Tag	Description	Location of SSCs					Notes
			Building	Side	Floor Elevation	Fire Zone No.	SSC Level Relative to the Flood Elevation (EL. 25'-3")	
279	NIS-NE-031	Source Range Neutron Flux	PCCV	N/A	20'-2"	FA1-101-03	above	3
280	NIS-NE-032	Source Range Neutron Flux	PCCV	N/A	20'-2"	FA1-101-03	above	3
281	NIS-NE-035	Intermediate Range Neutron Flux	PCCV	N/A	20'-2"	FA1-101-03	above	
282	NIS-NE-036	Intermediate Range Neutron Flux	PCCV	N/A	20'-2"	FA1-101-03	above	
283	NIS-NE-041A	Power Range Neutron Flux (Upper)	PCCV	N/A	20'-2"	FA1-101-03	above	
284	NIS-NE-041B	Power Range Neutron Flux (Lower)	PCCV	N/A	20'-2"	FA1-101-03	below	3
285	NIS-NE-042A	Power Range Neutron Flux (Upper)	PCCV	N/A	20'-2"	FA1-101-03	above	
286	NIS-NE-042B	Power Range Neutron Flux (Lower)	PCCV	N/A	20'-2"	FA1-101-03	below	3
287	NIS-NE-043A	Power Range Neutron Flux (Upper)	PCCV	N/A	20'-2"	FA1-101-03	above	
288	NIS-NE-043B	Power Range Neutron Flux (Lower)	PCCV	N/A	20'-2"	FA1-101-03	below	3
289	NIS-NE-044A	Power Range Neutron Flux (Upper)	PCCV	N/A	20'-2"	FA1-101-03	above	
290	NIS-NE-044B	Power Range Neutron Flux (Lower)	PCCV	N/A	20'-2"	FA1-101-03	below	3
291	NIS-NE-033	Wide Range Neutron Flux	PCCV	N/A	20'-2"	FA1-101-03	above	
292	NIS-NE-034	Wide Range Neutron Flux	PCCV	N/A	20'-2"	FA1-101-03	above	
293	RCS-LE-181	Reactor Vessel Water Level	PCCV	N/A	46'-11"	-	above	4

Table 3K-1 PCCV Components Protected From Internal Flooding (Sheet 19 of 20)

Item No.	Equipment Tag	Description	Location of SSCs					Notes
			Building	Side	Floor Elevation	Fire Zone No.	SSC Level Relative to the Flood Elevation (EL. 25'-3")	
294	RCS-LE-182	Reactor Vessel Water Level	PCCV	N/A	46'-11"	-	above	4
295	ICT-TE-001	Core Exit Temperature	PCCV	N/A	46'-11"	-	above	4
296	ICT-TE-002	Core Exit Temperature	PCCV	N/A	46'-11"	-	above	4
297	ICT-TE-003	Core Exit Temperature	PCCV	N/A	46'-11"	-	above	4
298	ICT-TE-004	Core Exit Temperature	PCCV	N/A	46'-11"	-	above	4
299	ICT-TE-005	Core Exit Temperature	PCCV	N/A	46'-11"	-	above	4
300	ICT-TE-006	Core Exit Temperature	PCCV	N/A	46'-11"	-	above	4
301	ICT-TE-007	Core Exit Temperature	PCCV	N/A	46'-11"	-	above	4
302	ICT-TE-008	Core Exit Temperature	PCCV	N/A	46'-11"	-	above	4
303	ICT-TE-009	Core Exit Temperature	PCCV	N/A	46'-11"	-	above	4
304	ICT-TE-010	Core Exit Temperature	PCCV	N/A	46'-11"	-	above	4
305	ICT-TE-011	Core Exit Temperature	PCCV	N/A	46'-11"	-	above	4
306	ICT-TE-012	Core Exit Temperature	PCCV	N/A	46'-11"	-	above	4
307	ICT-TE-013	Core Exit Temperature	PCCV	N/A	46'-11"	-	above	4
308	ICT-TE-014	Core Exit Temperature	PCCV	N/A	46'-11"	-	above	4
309	ICT-TE-015	Core Exit Temperature	PCCV	N/A	46'-11"	-	above	4
310	ICT-TE-016	Core Exit Temperature	PCCV	N/A	46'-11"	-	above	4
311	ICT-TE-017	Core Exit Temperature	PCCV	N/A	46'-11"	-	above	4
312	ICT-TE-018	Core Exit Temperature	PCCV	N/A	46'-11"	-	above	4
313	ICT-TE-019	Core Exit Temperature	PCCV	N/A	46'-11"	-	above	4

Table 3K-1 PCCV Components Protected From Internal Flooding (Sheet 20 of 20)

Item No.	Equipment Tag	Description	Location of SSCs					Notes
			Building	Side	Floor Elevation	Fire Zone No.	SSC Level Relative to the Flood Elevation (EL. 25'-3")	
314	ICT-TE-020	Core Exit Temperature	PCCV	N/A	46'-11"	-	above	4
315	ICT-TE-021	Core Exit Temperature	PCCV	N/A	46'-11"	-	above	4
316	ICT-TE-022	Core Exit Temperature	PCCV	N/A	46'-11"	-	above	4
317	ICT-TE-023	Core Exit Temperature	PCCV	N/A	46'-11"	-	above	4
318	ICT-TE-024	Core Exit Temperature	PCCV	N/A	46'-11"	-	above	4
319	ICT-TE-025	Core Exit Temperature	PCCV	N/A	46'-11"	-	above	4
320	ICT-TE-026	Core Exit Temperature	PCCV	N/A	46'-11"	-	above	4
321	RMS-RE-091A	Containment High Range Area Radiation	PCCV	N/A	76'-5"	FA1-101-26	above	
322	RMS-RE-091B	Containment High Range Area Radiation	PCCV	N/A	76'-5"	FA1-101-26	above	
323	RMS-RE-092A	Containment High Range Area Radiation	PCCV	N/A	76'-5"	FA1-101-23	above	
324	RMS-RE-092B	Containment High Range Area Radiation	PCCV	N/A	76'-5"	FA1-101-23	above	
325	RMS-RE-093A	Containment High Range Area Radiation	PCCV	N/A	76'-5"	FA1-101-24	above	
326	RMS-RE-093B	Containment High Range Area Radiation	PCCV	N/A	76'-5"	FA1-101-24	above	
327	RMS-RE-094A	Containment High Range Area Radiation	PCCV	N/A	76'-5"	FA1-101-25	above	
328	RMS-RE-094B	Containment High Range Area Radiation	PCCV	N/A	76'-5"	FA1-101-25	above	
329	VWS-MOV-422	Motor Operated Valve	PCCV	N/A	76'-5"	FA1-101-25	above	

Notes:

1. Lower portion of reactor vessel is flooded; however there is no impact to function of this component.
2. There is no impact to function of refueling water storage pit, even if outside of pit is flooded.
3. Installation area of these components is not flooded, except during LOCA. Functions of these components are not required during LOCA.
4. These components are located on the top of reactor vessel.

Table 3K-2 R/B RCA Components Protected From Internal Flooding (Sheet 1 of 22)

Item No.	Equipment Tag	Description	Location					Flood Elevation above Floor [ft]	Notes
			Building	Side	Floor Elevation	Fire Zone No.	Location Elevation above Floor		
1	RCS-AOV-132	Air Operated Valve	R/B RCA	W	25'-3"	FA2-152-06	above flood elevation	0.56	
2	RCS-AOV-148	Air Operated Valve	R/B RCA	W	25'-3"	FA2-153-05	above flood elevation	0.56	
3	RCS-AOV-138	Air Operated Valve	R/B RCA	W	25'-3"	FA2-152-05	above flood elevation	0.56	
4	CVS-MOV-151	Motor Operated Valve	R/B RCA	W	25'-3"	FA2-127-08	above flood elevation	0.56	
5	CVS-MOV-152	Motor Operated Valve	R/B RCA	W	25'-3"	FA2-127-08	above flood elevation	0.56	
6	CVS-MOV-204	Motor Operated Valve	R/B RCA	W	25'-3"	FA2-153-05	above flood elevation	0.56	
7	CVS-MOV-178A	Motor Operated Valve	R/B RCA	W	25'-3"	FA2-127-08	above flood elevation	0.56	
8	CVS-MOV-178B	Motor Operated Valve	R/B RCA	W	25'-3"	FA2-127-08	above flood elevation	0.56	
9	CVS-AOV-006	Air Operated Valve	R/B RCA	W	25'-3"	FA2-127-08	above flood elevation	0.56	
10	CVS-MOV-178C	Motor Operated Valve	R/B RCA	W	25'-3"	FA2-127-08	above flood elevation	0.56	
11	CVS-MOV-178D	Motor Operated Valve	R/B RCA	W	25'-3"	FA2-127-08	above flood elevation	0.56	
12	SIS-MPP-001A	A-Safety Injection Pump	R/B RCA	E	-26'-4"	FA2-113-01	N/A	-	1
13	SIS-MPP-001B	B-Safety Injection Pump	R/B RCA	E	-26'-4"	FA2-114-01	N/A	-	1

Table 3K-2 R/B RCA Components Protected From Internal Flooding (Sheet 2 of 22)

Item No.	Equipment Tag	Description	Location					Flood Elevation above Floor [ft]	Notes
			Building	Side	Floor Elevation	Fire Zone No.	Location Elevation above Floor		
14	SIS-MPP-001C	C-Safety Injection Pump	R/B RCA	W	-26'-4"	FA2-115-01	N/A	-	1
15	SIS-MPP-001D	D-Safety Injection Pump	R/B RCA	W	-26'-4"	FA2-116-01	N/A	-	1
16	SIS-MOV-001A	Motor Operated Valve	R/B RCA	E	-8'-7"	FA2-154-01	N/A	-	1
17	SIS-MOV-001B	Motor Operated Valve	R/B RCA	E	-8'-7"	FA2-151-01	N/A	-	1
18	SIS-MOV-009A	Motor Operated Valve	R/B RCA	E	25'-3"	FA2-154-05	above flood elevation	0.43	
19	SIS-MOV-009B	Motor Operated Valve	R/B RCA	E	25'-3"	FA2-151-05	above flood elevation	0.43	
20	SIS-MOV-001C	Motor Operated Valve	R/B RCA	W	-8'-7"	FA2-152-01	N/A	-	1
21	SIS-MOV-001D	Motor Operated Valve	R/B RCA	W	-8'-7"	FA2-153-01	N/A	-	1
22	SIS-MOV-009C	Motor Operated Valve	R/B RCA	W	25'-3"	FA2-152-05	above flood elevation	0.56	
23	SIS-MOV-009D	Motor Operated Valve	R/B RCA	W	25'-3"	FA2-153-05	above flood elevation	0.56	
24	SIS-AOV-114	Air Operated Valve	R/B RCA	E	25'-3"	FA2-151-06	above flood elevation	0.43	
25	RHS-MPP-001A	A-Containment Spray/Residual Heat Removal Pump	R/B RCA	E	-26'-4"	FA2-113-02	N/A	-	1
26	RHS-MPP-001B	B-Containment Spray/Residual Heat Removal Pump	R/B RCA	E	-26'-4"	FA2-114-02	N/A	-	1
27	RHS-MPP-001C	C-Containment Spray/Residual Heat Removal Pump	R/B RCA	W	-26'-4"	FA2-115-02	N/A	-	1

Table 3K-2 R/B RCA Components Protected From Internal Flooding (Sheet 3 of 22)

Item No.	Equipment Tag	Description	Location					Flood Elevation above Floor [ft]	Notes
			Building	Side	Floor Elevation	Fire Zone No.	Location Elevation above Floor		
28	RHS-MPP-001D	D-Containment Spray/Residual Heat Removal Pump	R/B RCA	W	-26'-4"	FA2-116-02	N/A	-	1
29	RHS-MHX-001A	A-Containment Spray/Residual Heat Removal Heat Exchanger	R/B RCA	E	3'-7"	FA2-154-03	N/A	-	1
30	RHS-MHX-001B	B-Containment Spray/Residual Heat Removal Heat Exchanger	R/B RCA	E	3'-7"	FA2-151-03	N/A	-	1
31	RHS-MHX-001C	C-Containment Spray/Residual Heat Removal Heat Exchanger	R/B RCA	W	3'-7"	FA2-152-03	N/A	-	1
32	RHS-MHX-001D	D-Containment Spray/Residual Heat Removal Heat Exchanger	R/B RCA	W	3'-7"	FA2-153-03	N/A	-	1
33	RHS-MOV-021A	Motor Operated Valve	R/B RCA	E	25'-3"	FA2-154-05	above flood elevation	0.43	
34	RHS-MOV-021B	Motor Operated Valve	R/B RCA	E	25'-3"	FA2-151-05	above flood elevation	0.43	
35	RHS-HCV-023	Hand Control Valve	R/B RCA	E	3'-7"	FA2-151-03	N/A	-	1
36	RHS-FCV-021	Flow Control Valve	R/B RCA	E	3'-7"	FA2-151-01	N/A	-	1
37	RHS-MOV-021C	Motor Operated Valve	R/B RCA	W	25'-3"	FA2-152-05	above flood elevation	0.56	
38	RHS-MOV-021D	Motor Operated Valve	R/B RCA	W	25'-3"	FA2-153-05	above flood elevation	0.56	
39	RHS-HCV-033	Hand Control Valve	R/B RCA	W	3'-7"	FA2-152-03	N/A	-	1
40	RHS-FCV-031	Flow Control Valve	R/B RCA	W	3'-7"	FA2-152-01	N/A	-	1
41	CSS-MOV-004A	Motor Operated Valve	R/B RCA	E	25'-3"	FA2-154-05	above flood elevation	0.43	
42	CSS-MOV-004B	Motor Operated Valve	R/B RCA	E	25'-3"	FA2-151-05	above flood elevation	0.43	

Table 3K-2 R/B RCA Components Protected From Internal Flooding (Sheet 4 of 22)

Item No.	Equipment Tag	Description	Location					Flood Elevation above Floor [ft]	Notes
			Building	Side	Floor Elevation	Fire Zone No.	Location Elevation above Floor		
43	CSS-MOV-001A	Motor Operated Valve	R/B RCA	E	-8'-7	FA2-154-01	N/A	-	1
44	CSS-MOV-001B	Motor Operated Valve	R/B RCA	E	-8'-7	FA2-151-01	N/A	-	1
45	CSS-MOV-004C	Motor Operated Valve	R/B RCA	W	25'-3"	FA2-152-05	above flood elevation	0.56	
46	CSS-MOV-004D	Motor Operated Valve	R/B RCA	W	25'-3"	FA2-153-05	above flood elevation	0.56	
47	CSS-MOV-001C	Motor Operated Valve	R/B RCA	W	-8'-7	FA2-152-01	N/A	-	1
48	CSS-MOV-001D	Motor Operated Valve	R/B RCA	W	-8'-7	FA2-153-01	N/A	-	1
49	CSS-MOV-011	Motor Operated Valve	R/B RCA	E	3'-7"	FA2-151-04	above flood elevation	0.70	1
50	NCS-MOV-145A	Motor Operated Valve	R/B RCA	E	3'-7"	FA2-209-03	above flood elevation	0.70	
51	NCS-MOV-438A	Motor Operated Valve	R/B RCA	E	25'-3"	FA2-151-06	above flood elevation	0.43	
52	NCS-MOV-145B	Motor Operated Valve	R/B RCA	E	3'-7"	FA2-151-04	above flood elevation	0.70	
53	NCS-MOV-145C	Motor Operated Valve	R/B RCA	W	3'-7"	FA2-152-04	above flood elevation	0.79	
54	NCS-MOV-145D	Motor Operated Valve	R/B RCA	W	3'-7"	FA2-128-02	above flood elevation	0.79	
55	NCS-MOV-232A	Motor Operated Valve	R/B RCA	E	25'-3"	FA2-151-06	above flood elevation	0.43	
56	NCS-MOV-232B	Motor Operated Valve	R/B RCA	W	25'-3"	FA2-152-06	above flood elevation	0.56	

Table 3K-2 R/B RCA Components Protected From Internal Flooding (Sheet 5 of 22)

Item No.	Equipment Tag	Description	Location					Flood Elevation above Floor [ft]	Notes
			Building	Side	Floor Elevation	Fire Zone No.	Location Elevation above Floor		
57	NCS-MOV-233A	Motor Operated Valve	R/B RCA	E	25'-3"	FA2-151-06	above flood elevation	0.43	
58	NCS-MOV-233B	Motor Operated Valve	R/B RCA	W	25'-3"	FA2-152-06	above flood elevation	0.56	
59	NCS-MOV-234A	Motor Operated Valve	R/B RCA	E	25'-3"	FA2-151-06	above flood elevation	0.43	
60	NCS-MOV-234B	Motor Operated Valve	R/B RCA	W	25'-3"	FA2-152-06	above flood elevation	0.56	
61	NCS-MOV-511	Motor Operated Valve	R/B RCA	E	25'-3"	FA2-151-06	above flood elevation	0.43	
62	NCS-MOV-517	Motor Operated Valve	R/B RCA	E	25'-3"	FA2-151-06	above flood elevation	0.43	
63	NCS-MOV-402A	Motor Operated Valve	R/B RCA	E	25'-3"	FA2-151-06	above flood elevation	0.43	
64	NCS-MOV-531	Motor Operated Valve	R/B RCA	W	25'-3"	FA2-152-06	above flood elevation	0.56	
65	NCS-MOV-537	Motor Operated Valve	R/B RCA	W	25'-3"	FA2-152-06	above flood elevation	0.56	
66	NCS-MOV-402B	Motor Operated Valve	R/B RCA	W	25'-3"	FA2-152-06	above flood elevation	0.56	
67	NCS-MOV-438B	Motor Operated Valve	R/B RCA	W	25'-3"	FA2-152-06	above flood elevation	0.56	
68	LMS-AOV-053	Air Operated Valve	R/B RCA	W	25'-3"	FA2-153-05	above flood elevation	0.56	
69	LMS-AOV-056	Air Operated Valve	R/B RCA	W	25'-3"	FA2-153-05	above flood elevation	0.56	
70	LMS-AOV-060	Air Operated Valve	R/B RCA	W	25'-3"	FA2-153-05	above flood elevation	0.56	

Table 3K-2 R/B RCA Components Protected From Internal Flooding (Sheet 6 of 22)

Item No.	Equipment Tag	Description	Location					Flood Elevation above Floor [ft]	Notes
			Building	Side	Floor Elevation	Fire Zone No.	Location Elevation above Floor		
71	LMS-LCV-010B	Level Control Valve	R/B RCA	E	25'-3"	FA2-154-05	above flood elevation	0.43	
72	LMS-AOV-105	Air Operated Valve	R/B RCA	E	25'-3"	FA2-154-05	above flood elevation	0.43	
73	PSS-MOV-031A	Motor Operated Valve	R/B RCA	W	25'-3"	FA2-153-05	above flood elevation	0.56	
74	PSS-MOV-031B	Motor Operated Valve	R/B RCA	W	25'-3"	FA2-153-05	above flood elevation	0.56	
75	PSS -MOV-052A	Motor Operated Valve	R/B RCA	W	25'-3"	FA2-322-01	above flood elevation	0.56	
76	PSS -MOV-052B	Motor Operated Valve	R/B RCA	W	25'-3"	FA2-322-01	above flood elevation	0.56	
77	PSS -MOV-052C	Motor Operated Valve	R/B RCA	W	25'-3"	FA2-322-01	above flood elevation	0.56	
78	PSS -MOV-052D	Motor Operated Valve	R/B RCA	W	25'-3"	FA2-322-01	above flood elevation	0.56	
79	PSS-AOV-063	Air Operated Valve	R/B RCA	W	25'-3"	FA2-153-05	above flood elevation	0.56	
80	PSS-MOV-071	Motor Operated Valve	R/B RCA	W	25'-3"	FA2-153-05	above flood elevation	0.56	
81	SGS-AOV-031A	Air Operated Valve	R/B RCA	E	25'-3"	FA2-151-06	above flood elevation	0.43	
82	SGS-AOV-031B	Air Operated Valve	R/B RCA	E	25'-3"	FA2-151-06	above flood elevation	0.43	
83	SGS-AOV-031C	Air Operated Valve	R/B RCA	E	25'-3"	FA2-151-06	above flood elevation	0.43	
84	SGS-AOV-031D	Air Operated Valve	R/B RCA	E	25'-3"	FA2-151-06	above flood elevation	0.43	

Table 3K-2 R/B RCA Components Protected From Internal Flooding (Sheet 7 of 22)

Item No.	Equipment Tag	Description	Location					Flood Elevation above Floor [ft]	Notes
			Building	Side	Floor Elevation	Fire Zone No.	Location Elevation above Floor		
85	RWS-MOV-004	Motor Operated Valve	R/B RCA	E	3'-7"	FA2-211-01	above flood elevation	0.70	
86	RWS-AOV-022	Air Operated Valve	R/B RCA	E	3'-7"	FA2-211-01	above flood elevation	0.70	
87	IAS-MOV-002	Motor Operated Valve	R/B RCA	W	25'-3"	FA2-152-06	above flood elevation	0.56	
88	RMS-MOV-002	Motor Operated Valve	R/B RCA	W	25'-3"	FA2-153-05	above flood elevation	0.56	
89	RMS-MOV-003	Motor Operated Valve	R/B RCA	W	25'-3"	FA2-153-05	above flood elevation	0.56	
90	VRS-MFU-001A	A-Annulus EmergencyFiltration Unit Exhaust	R/B RCA	E	50'-2"	FA2-416-01	above flood elevation	0.54	
91	VRS-MFU-001B	B-Annulus EmergencyFiltration Unit Exhaust	R/B RCA	W	50'-2"	FA2-417-01	above flood elevation	0.61	
92	VRS-MFN-001A	A-Annulus EmergencyFiltration Unit Fan Exhaust	R/B RCA	E	50'-2"	FA2-416-01	above flood elevation	0.54	
93	VRS-MFN-001B	B-Annulus EmergencyFiltration Unit Fan Exhaust	R/B RCA	W	50'-2"	FA2-417-01	above flood elevation	0.61	
94	VRS-EHD-001A	Electro Hydraulic Operated Damper	R/B RCA	E	50'-2"	FA2-416-01	above flood elevation	0.54	
95	VRS-EHD-001B	Electro Hydraulic Operated Damper	R/B RCA	W	50'-2"	FA2-417-01	above flood elevation	0.61	
96	VRS-EHD-002A	Electro Hydraulic Operated Damper	R/B RCA	E	50'-2"	FA2-416-01	above flood elevation	0.54	
97	VRS-EHD-002B	Electro Hydraulic Operated Damper	R/B RCA	W	50'-2"	FA2-417-01	above flood elevation	0.61	

Table 3K-2 R/B RCA Components Protected From Internal Flooding (Sheet 8 of 22)

Item No.	Equipment Tag	Description	Location					Flood Elevation above Floor [ft]	Notes
			Building	Side	Floor Elevation	Fire Zone No.	Location Elevation above Floor		
98	VRS-EHD-003A	Electro Hydraulic Operated Damper	R/B RCA	E	50'-2"	FA2-416-01	above flood elevation	0.54	
99	VRS-EHD-003B	Electro Hydraulic Operated Damper	R/B RCA	W	50'-2"	FA2-417-01	above flood elevation	0.61	
100	VRS-MAH-301A	A-Safeguard Component Area Air Handling Unit	R/B RCA	E	3'-7"	FA2-154-04	N/A	-	1
101	VRS-MAH-301B	B-Safeguard Component Area Air Handling Unit	R/B RCA	E	3'-7"	FA2-151-02	N/A	-	1
102	VRS-MAH-301C	C-Safeguard Component Area Air Handling Unit	R/B RCA	W	3'-7"	FA2-152-02	N/A	-	1
103	VRS-MAH-301D	D-Safeguard Component Area Air Handling Unit	R/B RCA	W	3'-7"	FA2-153-04	N/A	-	1
104	VRS-MFN-301A	A-Safeguard Component Area Air Handling Unit Fan	R/B RCA	E	3'-7"	FA2-154-04	N/A	-	1
105	VRS-MFN-301B	B-Safeguard Component Area Air Handling Unit Fan	R/B RCA	E	3'-7"	FA2-151-02	N/A	-	1
106	VRS-MFN-301C	C-Safeguard Component Area Air Handling Unit Fan	R/B RCA	W	3'-7"	FA2-152-02	N/A	-	1
107	VRS-MFN-301D	D-Safeguard Component Area Air Handling Unit Fan	R/B RCA	W	3'-7"	FA2-153-04	N/A	-	1
108	VRS-MCL-301A	A-Safeguard Component Area Air Handling Unit Cooling Coil	R/B RCA	E	3'-7"	FA2-154-04	N/A	-	1
109	VRS-MCL-301B	B-Safeguard Component Area Air Handling Unit Cooling Coil	R/B RCA	E	3'-7"	FA2-151-02	N/A	-	1
110	VRS-MCL-301C	C-Safeguard Component Area Air Handling Unit Cooling Coil	R/B RCA	W	3'-7"	FA2-152-02	N/A	-	1
111	VRS-MCL-301D	D-Safeguard Component Area Air Handling Unit Cooling Coil	R/B RCA	W	3'-7"	FA2-153-04	N/A	-	1

Table 3K-2 R/B RCA Components Protected From Internal Flooding (Sheet 9 of 22)

Item No.	Equipment Tag	Description	Location					Flood Elevation above Floor [ft]	Notes
			Building	Side	Floor Elevation	Fire Zone No.	Location Elevation above Floor		
112	VRS-MEH-301A	A-Safeguard Component Area Air Handling Unit Electric Heating Coil	R/B RCA	E	3'-7"	FA2-154-04	N/A	-	1
113	VRS-MEH-301B	B-Safeguard Component Area Air Handling Unit Electric Heating Coil	R/B RCA	E	3'-7"	FA2-151-02	N/A	-	1
114	VRS-MEH-301C	C-Safeguard Component Area Air Handling Unit Electric Heating Coil	R/B RCA	W	3'-7"	FA2-152-02	N/A	-	1
115	VRS-MEH-301D	D-Safeguard Component Area Air Handling Unit Electric Heating Coil	R/B RCA	W	3'-7"	FA2-153-04	N/A	-	1
116	VRS-MOD-301A	Motor Operated Damper	R/B RCA	E	3'-7"	FA2-154-04	N/A	-	1
117	VRS-MOD-301B	Motor Operated Damper	R/B RCA	E	3'-7"	FA2-151-02	N/A	-	1
118	VRS-MOD-301C	Motor Operated Damper	R/B RCA	W	3'-7"	FA2-152-02	N/A	-	1
119	VRS-MOD-301D	Motor Operated Damper	R/B RCA	W	3'-7"	FA2-153-04	N/A	-	1
120	VRS-MOD-302A	Motor Operated Damper	R/B RCA	E	3'-7"	FA2-154-04	N/A	-	1
121	VRS-MOD-302B	Motor Operated Damper	R/B RCA	E	3'-7"	FA2-151-02	N/A	-	1
122	VRS-MOD-302C	Motor Operated Damper	R/B RCA	W	3'-7"	FA2-152-02	N/A	-	1
123	VRS-MOD-302D	Motor Operated Damper	R/B RCA	W	3'-7"	FA2-153-04	N/A	-	1

Table 3K-2 R/B RCA Components Protected From Internal Flooding (Sheet 10 of 22)

Item No.	Equipment Tag	Description	Location					Flood Elevation above Floor [ft]	Notes
			Building	Side	Floor Elevation	Fire Zone No.	Location Elevation above Floor		
124	VRS-MAH-541A	A-Annulus Emergency Exhaust Filtration Unit Area Air Handling Unit	R/B RCA	E	50'-2"	FA2-416-01	above flood elevation	0.54	
125	VRS-MAH-541B	B-Annulus Emergency Exhaust Filtration Unit Area Air Handling Unit	R/B RCA	W	50'-2"	FA2-417-01	above flood elevation	0.61	
126	VRS-MFN-541A	A-Annulus Emergency Exhaust Filtration Unit Area Air Handling Unit Fan	R/B RCA	E	50'-2"	FA2-416-01	above flood elevation	0.54	
127	VRS-MFN-541B	B-Annulus Emergency Exhaust Filtration Unit Area Air Handling Unit Fan	R/B RCA	W	50'-2"	FA2-417-01	above flood elevation	0.61	
128	VRS-MCL-541A	A-Annulus Emergency Exhaust Filtration Unit Area Air Handling Unit Cooling Coil	R/B RCA	E	50'-2"	FA2-416-01	above flood elevation	0.54	
129	VRS-MCL-541B	A-Annulus Emergency Exhaust Filtration Unit Area Air Handling Unit Cooling Coil	R/B RCA	E	50'-2"	FA2-416-01	above flood elevation	0.54	
130	VRS-MCL-541C	B-Annulus Emergency Exhaust Filtration Unit Area Air Handling Unit Cooling Coil	R/B RCA	W	50'-2"	FA2-417-01	above flood elevation	0.61	
131	VRS-MCL-541D	B-Annulus Emergency Exhaust Filtration Unit Area Air Handling Unit Cooling Coil	R/B RCA	W	50'-2"	FA2-417-01	above flood elevation	0.61	
132	VRS-MEH-541A	A-Annulus Emergency Exhaust Filtration Unit Area Air Handling Unit Electric Heating Coil	R/B RCA	E	50'-2"	FA2-416-01	above flood elevation	0.54	

Table 3K-2 R/B RCA Components Protected From Internal Flooding (Sheet 11 of 22)

Item No.	Equipment Tag	Description	Location					Flood Elevation above Floor [ft]	Notes
			Building	Side	Floor Elevation	Fire Zone No.	Location Elevation above Floor		
133	VRS-MEH-541B	B-Annulus Emergency Exhaust Filtration Unit Area Air Handling Unit Electric Heating Coil	R/B RCA	W	50'-2"	FA2-417-01	above flood elevation	0.61	
134	VRS-MAH-551A	A-Penetration Area Air Handling Unit	R/B RCA	E	50'-2"	FA2-408-01	N/A	-	2
135	VRS-MAH-551B	B-Penetration Area Air Handling Unit	R/B RCA	E	50'-2"	FA2-409-01	above flood elevation	0.54	
136	VRS-MAH-551C	C-Penetration Area Air Handling Unit	R/B RCA	W	50'-2"	FA2-410-01	above flood elevation	0.61	
137	VRS-MAH-551D	D-Penetration Area Air Handling Unit	R/B RCA	W	50'-2"	FA2-411-01	above flood elevation	0.61	
138	VRS-MFN-551A	A-Penetration Area Air Handling Unit Fan	R/B RCA	E	50'-2"	FA2-408-01	N/A	-	2
139	VRS-MFN-551B	B-Penetration Area Air Handling Unit Fan	R/B RCA	E	50'-2"	FA2-409-01	above flood elevation	0.54	
140	VRS-MFN-551C	C-Penetration Area Air Handling Unit Fan	R/B RCA	W	50'-2"	FA2-410-01	above flood elevation	0.61	
141	VRS-MFN-551D	D-Penetration Area Air Handling Unit Fan	R/B RCA	W	50'-2"	FA2-411-01	above flood elevation	0.61	
142	VRS-MCL-551A	A-Penetration Area Air Handling Unit Cooling Coil	R/B RCA	E	50'-2"	FA2-408-01	N/A	-	2
143	VRS-MCL-551B	B-Penetration Area Air Handling Unit Cooling Coil	R/B RCA	E	50'-2"	FA2-409-01	above flood elevation	0.54	
144	VRS-MCL-551C	C-Penetration Area Air Handling Unit Cooling Coil	R/B RCA	W	50'-2"	FA2-410-01	above flood elevation	0.61	
145	VRS-MCL-551D	D-Penetration Area Air Handling Unit Cooling Coil	R/B RCA	W	50'-2"	FA2-411-01	above flood elevation	0.61	

Table 3K-2 R/B RCA Components Protected From Internal Flooding (Sheet 12 of 22)

Item No.	Equipment Tag	Description	Location					Flood Elevation above Floor [ft]	Notes
			Building	Side	Floor Elevation	Fire Zone No.	Location Elevation above Floor		
146	VRS-MEH-551A	A-Penetration Area Air Handling Unit Electric Heating Coil	R/B RCA	E	50'-2"	FA2-408-01	N/A	-	2
147	VRS-MEH-551B	B-Penetration Area Air Handling Unit Electric Heating Coil	R/B RCA	E	50'-2"	FA2-409-01	above flood elevation	0.54	
148	VRS-MEH-551C	C-Penetration Area Air Handling Unit Electric Heating Coil	R/B RCA	W	50'-2"	FA2-410-01	above flood elevation	0.61	
149	VRS-MEH-551D	D-Penetration Area Air Handling Unit Electric Heating Coil	R/B RCA	W	50'-2"	FA2-411-01	above flood elevation	0.61	
150	VCS-AOV-304	Air Operated Valve	R/B RCA	E	76'-5"	FA2-409-02	above flood elevation	0.68	
151	VCS-AOV-307	Air Operated Valve	R/B RCA	W	76'-5"	FA2-511-01	above flood elevation	0.83	
152	VCS-AOV-354	Air Operated Valve	R/B RCA	E	76'-5"	FA2-409-02	above flood elevation	0.68	
153	VCS-AOV-357	Air Operated Valve	R/B RCA	W	76'-5"	FA2-511-01	above flood elevation	0.83	
154	VAS-AOD-501A	Air Operated Damper	R/B RCA	E	25'-3"	FA2-209-04	above flood elevation	0.43	
155	VAS-AOD-501B	Air Operated Damper	R/B RCA	W	50'-2"	FA2-418-01	above flood elevation	0.61	
156	VAS-AOD-502A	Air Operated Damper	R/B RCA	E	25'-3"	FA2-154-05	above flood elevation	0.43	
157	VAS-AOD-502B	Air Operated Damper	R/B RCA	W	50'-2"	FA2-411-01	above flood elevation	0.61	

Table 3K-2 R/B RCA Components Protected From Internal Flooding (Sheet 13 of 22)

Item No.	Equipment Tag	Description	Location					Flood Elevation above Floor [ft]	Notes
			Building	Side	Floor Elevation	Fire Zone No.	Location Elevation above Floor		
158	VAS-AOD-503A	Air Operated Damper	R/B RCA	E	25'-3"	FA2-154-05	above flood elevation	0.43	
159	VAS-AOD-503B	Air Operated Damper	R/B RCA	W	50'-2"	FA2-411-01	above flood elevation	0.61	
160	VAS-AOD-504A	Air Operated Damper	R/B RCA	E	25'-3"	FA2-209-04	above flood elevation	0.43	
161	VAS-AOD-504B	Air Operated Damper	R/B RCA	W	50'-2"	FA2-418-01	above flood elevation	0.61	
162	VAS-AOD-505A	Air Operated Damper	R/B RCA	E	3'-7"	FA2-209-03	above flood elevation	0.70	
163	VAS-AOD-505B	Air Operated Damper	R/B RCA	E	3'-7"	FA2-151-04	above flood elevation	0.70	
164	VAS-AOD-505C	Air Operated Damper	R/B RCA	W	3'-7"	FA2-152-04	above flood elevation	0.79	
165	VAS-AOD-505D	Air Operated Damper	R/B RCA	W	3'-7"	FA2-128-02	above flood elevation	0.79	
166	VAS-AOD-506A	Air Operated Damper	R/B RCA	E	3'-7"	FA2-154-03	N/A	-	1
167	VAS-AOD-506B	Air Operated Damper	R/B RCA	E	3'-7"	FA2-151-03	N/A	-	1
168	VAS-AOD-506C	Air Operated Damper	R/B RCA	W	3'-7"	FA2-152-03	N/A	-	1
169	VAS-AOD-506D	Air Operated Damper	R/B RCA	W	3'-7"	FA2-153-03	N/A	-	1
170	VAS-AOD-507A	Air Operated Damper	R/B RCA	E	3'-7"	FA2-154-03	N/A	-	1
171	VAS-AOD-507B	Air Operated Damper	R/B RCA	E	3'-7"	FA2-151-03	N/A	-	1

Table 3K-2 R/B RCA Components Protected From Internal Flooding (Sheet 14 of 22)

Item No.	Equipment Tag	Description	Location					Flood Elevation above Floor [ft]	Notes
			Building	Side	Floor Elevation	Fire Zone No.	Location Elevation above Floor		
172	VAS-AOD-507C	Air Operated Damper	R/B RCA	W	3'-7"	FA2-152-03	N/A	-	1
173	VAS-AOD-507D	Air Operated Damper	R/B RCA	W	3'-7"	FA2-153-03	N/A	-	1
174	VAS-AOD-508A	Air Operated Damper	R/B RCA	E	3'-7"	FA2-209-03	above flood elevation	0.70	
175	VAS-AOD-508B	Air Operated Damper	R/B RCA	E	3'-7"	FA2-151-04	above flood elevation	0.70	
176	VAS-AOD-508C	Air Operated Damper	R/B RCA	W	3'-7"	FA2-152-04	above flood elevation	0.79	
177	VAS-AOD-508D	Air Operated Damper	R/B RCA	W	3'-7"	FA2-128-02	above flood elevation	0.79	
178	VAS-AOD-511	Air Operated Damper	R/B RCA	W	76'-5"	FA2-214-07	above flood elevation	0.83	
179	VAS-AOD-512	Air Operated Damper	R/B RCA	W	76'-5"	FA2-214-07	above flood elevation	0.83	
180	VWS-TCV-304	Chilled Water Control Valve	R/B RCA	E	3'-7"	FA2-154-04	N/A	-	1
181	VWS-TCV-314	Chilled Water Control Valve	R/B RCA	E	3'-7"	FA2-151-02	N/A	-	1
182	VWS-TCV-324	Chilled Water Control Valve	R/B RCA	W	3'-7"	FA2-152-02	N/A	-	1
183	VWS-TCV-334	Chilled Water Control Valve	R/B RCA	W	3'-7"	FA2-153-04	N/A	-	1
184	VWS-TCV-602A	Chilled Water Control Valve	R/B RCA	E	50'-2"	FA2-416-01	above flood elevation	0.54	
185	VWS-TCV-602B	Chilled Water Control Valve	R/B RCA	E	50'-2"	FA2-416-01	above flood elevation	0.54	
186	VWS-TCV-612A	Chilled Water Control Valve	R/B RCA	W	50'-2"	FA2-417-01	above flood elevation	0.61	

Table 3K-2 R/B RCA Components Protected From Internal Flooding (Sheet 15 of 22)

Item No.	Equipment Tag	Description	Location					Flood Elevation above Floor [ft]	Notes
			Building	Side	Floor Elevation	Fire Zone No.	Location Elevation above Floor		
187	VWS-TCV-612B	Chilled Water Control Valve	R/B RCA	W	50'-2"	FA2-417-01	above flood elevation	0.61	
188	VWS-TCV-622	Chilled Water Control Valve	R/B RCA	E	50'-2"	FA2-408-01	N/A	-	2
189	VWS-TCV-632	Chilled Water Control Valve	R/B RCA	E	50'-2"	FA2-409-01	above flood elevation	0.54	
190	VWS-TCV-642	Chilled Water Control Valve	R/B RCA	W	50'-2"	FA2-410-01	above flood elevation	0.61	
191	VWS-TCV-652	Chilled Water Control Valve	R/B RCA	W	50'-2"	FA2-411-01	above flood elevation	0.61	
192	VWS-MOV-403	Motor Operated Valve	R/B RCA	W	76'-5"	FA2-511-01	above flood elevation	0.83	
193	VWS-MOV-407	Motor Operated Valve	R/B RCA	W	76'-5"	FA2-511-01	above flood elevation	0.83	
194	SRPP-A	Source Range Neutron Flux Preamplifier Panel (Train A)	R/B RCA	E	50'-2"	FA2-408-01	N/A	-	2
195	SRPP-D	Source Range Neutron Flux Preamplifier Panel (Train D)	R/B RCA	W	50'-2"	FA2-411-01	above flood elevation	0.61	
196	WRPP-A	Wide Range Neutron Flux Preamplifier Panel (Train A)	R/B RCA	E	50'-2"	FA2-408-01	N/A	-	2
197	WRPP-D	Wide Range Neutron Flux Preamplifier Panel (Train D)	R/B RCA	W	50'-2"	FA2-411-01	above flood elevation	0.61	
198	CVS-FT-128	Primary Makeup Water Supply Flow	R/B RCA	W	25'-3"	FA2-213-01	above flood elevation	0.56	
199	CVS-FT-129	Primary Makeup Water Supply Flow	R/B RCA	W	25'-3"	FA2-213-01	above flood elevation	0.56	
200	SIS-FT-062	A -Safety Injection Pump Discharge Flow	R/B RCA	E	-26'-4"	FA2-113-03	N/A	-	1

Table 3K-2 R/B RCA Components Protected From Internal Flooding (Sheet 16 of 22)

Item No.	Equipment Tag	Description	Location					Flood Elevation above Floor [ft]	Notes
			Building	Side	Floor Elevation	Fire Zone No.	Location Elevation above Floor		
201	SIS-FT-063	B -Safety Injection Pump Discharge Flow	R/B RCA	E	-26'-4"	FA2-114-03	N/A	-	1
202	SIS-FT-064	C -Safety Injection Pump Discharge Flow	R/B RCA	W	-26'-4"	FA2-115-03	N/A	-	1
203	SIS-FT-065	D -Safety Injection Pump Discharge Flow	R/B RCA	W	-26'-4"	FA2-116-03	N/A	-	1
204	SIS-PT-060	A - Safety Injection Pump Suction Pressure	R/B RCA	E	-26'-4"	FA2-113-03	N/A	-	1
205	SIS-PT-061	B - Safety Injection Pump Suction Pressure	R/B RCA	E	-26'-4"	FA2-114-03	N/A	-	1
206	SIS-PT-062	C - Safety Injection Pump Suction Pressure	R/B RCA	W	-26'-4"	FA2-115-03	N/A	-	1
207	SIS-PT-063	D - Safety Injection Pump Suction Pressure	R/B RCA	W	-26'-4"	FA2-116-03	N/A	-	1
208	SIS-PT-064	A -Safety Injection Pump Discharge Pressure	R/B RCA	E	-26'-4"	FA2-113-03	N/A	-	1
209	SIS-PT-065	B -Safety Injection Pump Discharge Pressure	R/B RCA	E	-26'-4"	FA2-114-03	N/A	-	1
210	SIS-PT-066	C -Safety Injection Pump Discharge Pressure	R/B RCA	W	-26'-4"	FA2-115-03	N/A	-	1
211	SIS-PT-067	D -Safety Injection Pump Discharge Pressure	R/B RCA	W	-26'-4"	FA2-116-03	N/A	-	1
212	RHS-FT-011	A - Containment Spray / Residual Heat Removal Pump Discharge Flow	R/B RCA	E	-26'-4"	FA2-113-03	N/A	-	1
213	RHS-FT-014	A - Containment Spray / Residual Heat Removal Pump Minimum Flow	R/B RCA	E	3'-7"	FA2-209-03	above flood elevation	0.70	

Table 3K-2 R/B RCA Components Protected From Internal Flooding (Sheet 17 of 22)

Item No.	Equipment Tag	Description	Location					Flood Elevation above Floor [ft]	Notes
			Building	Side	Floor Elevation	Fire Zone No.	Location Elevation above Floor		
214	RHS-FT-021	B - Containment Spray / Residual Heat Removal Pump Discharge Flow	R/B RCA	E	-26'-4"	FA2-114-03	N/A	-	1
215	RHS-FT-024	B - Containment Spray / Residual Heat Removal Pump Minimum Flow	R/B RCA	E	3'-7"	FA2-151-04	above flood elevation	0.70	
216	RHS-FT-031	C - Containment Spray / Residual Heat Removal Pump Discharge Flow	R/B RCA	W	-26'-4"	FA2-115-03	N/A	-	1
217	RHS-FT-034	C - Containment Spray / Residual Heat Removal Pump Minimum Flow	R/B RCA	W	3'-7"	FA2-152-04	above flood elevation	0.79	
218	RHS-FT-041	D - Containment Spray / Residual Heat Removal Pump Discharge Flow	R/B RCA	W	-26'-4"	FA2-116-03	N/A	-	1
219	RHS-FT-044	D - Containment Spray / Residual Heat Removal Pump Minimum Flow	R/B RCA	W	3'-7"	FA2-128-02	above flood elevation	0.79	
220	RHS-PT-010	A - Containment Spray / Residual Heat Removal Pump Suction Pressure	R/B RCA	E	-26'-4"	FA2-113-03	N/A	-	1
221	RHS-PT-011	A - Containment Spray / Residual Heat Removal Pump Discharge Pressure	R/B RCA	E	-26'-4"	FA2-113-03	N/A	-	1
222	RHS-PT-020	B - Containment Spray / Residual Heat Removal Pump Suction Pressure	R/B RCA	E	-26'-4"	FA2-114-03	N/A	-	1
223	RHS-PT-021	B - Containment Spray / Residual Heat Removal Pump Discharge Pressure	R/B RCA	E	-26'-4"	FA2-114-03	N/A	-	1

Table 3K-2 R/B RCA Components Protected From Internal Flooding (Sheet 18 of 22)

Item No.	Equipment Tag	Description	Location					Flood Elevation above Floor [ft]	Notes
			Building	Side	Floor Elevation	Fire Zone No.	Location Elevation above Floor		
224	RHS-PT-030	C - Containment Spray / Residual Heat Removal Pump Suction Pressure	R/B RCA	W	-26'-4"	FA2-115-03	N/A	-	1
225	RHS-PT-031	C - Containment Spray / Residual Heat Removal Pump Discharge Pressure	R/B RCA	W	-26'-4"	FA2-115-03	N/A	-	1
226	RHS-PT-040	D - Containment Spray / Residual Heat Removal Pump Suction Pressure	R/B RCA	W	-26'-4"	FA2-116-03	N/A	-	1
227	RHS-PT-041	D - Containment Spray / Residual Heat Removal Pump Discharge Pressure	R/B RCA	W	-26'-4"	FA2-116-03	N/A	-	1
228	CSS-PT-010	Containment Pressure	R/B RCA	E	76'-5"	FA2-506-01	above flood elevation	0.68	
229	CSS-PT-011	Containment Pressure	R/B RCA	E	25'-3"	FA2-151-05	above flood elevation	0.43	
230	CSS-PT-012	Containment Pressure	R/B RCA	W	25'-3"	FA2-152-05	above flood elevation	0.56	
231	CSS-PT-013	Containment Pressure	R/B RCA	W	76'-5"	FA2-410-02	above flood elevation	0.83	
232	RHS-TE-014	A - Containment Spray / Residual Heat Removal Heat Exchanger Outlet Temperature	R/B RCA	E	3'-7"	FA2-154-03	N/A	-	1
233	RHS-TE-024	B - Containment Spray / Residual Heat Removal Heat Exchanger Outlet Temperature	R/B RCA	E	3'-7"	FA2-151-03	N/A	-	1
234	RHS-TE-034	C - Containment Spray / Residual Heat Removal Heat Exchanger Outlet Temperature	R/B RCA	W	3'-7"	FA2-152-03	N/A	-	1

Table 3K-2 R/B RCA Components Protected From Internal Flooding (Sheet 19 of 22)

Item No.	Equipment Tag	Description	Location					Flood Elevation above Floor [ft]	Notes
			Building	Side	Floor Elevation	Fire Zone No.	Location Elevation above Floor		
235	RHS-TE-044	D - Containment Spray / Residual Heat Removal Heat Exchanger Outlet Temperature	R/B RCA	W	3'-7"	FA2-153-03	N/A	-	1
236	VRS-TS-621	A - Penetration Area Temperature	R/B RCA	E	25'-3"	FA2-154-05	above flood elevation	0.43	
237	VRS-TS-624	A - Penetration Area Temperature	R/B RCA	E	25'-3"	FA2-154-05	above flood elevation	0.43	
238	VRS-TS-625	A - Penetration Area Temperature	R/B RCA	E	25'-3"	FA2-154-05	above flood elevation	0.43	
239	VRS-TS-631	B - Penetration Area Temperature	R/B RCA	E	25'-3"	FA2-151-05	above flood elevation	0.43	
240	VRS-TS-634	B - Penetration Area Temperature	R/B RCA	E	25'-3"	FA2-151-05	above flood elevation	0.43	
241	VRS-TS-635	B - Penetration Area Temperature	R/B RCA	E	25'-3"	FA2-151-05	above flood elevation	0.43	
242	VRS-TS-641	C - Penetration Area Temperature	R/B RCA	W	25'-3"	FA2-152-05	above flood elevation	0.56	
243	VRS-TS-644	C - Penetration Area Temperature	R/B RCA	W	25'-3"	FA2-152-05	above flood elevation	0.56	
244	VRS-TS-645	C - Penetration Area Temperature	R/B RCA	W	25'-3"	FA2-152-05	above flood elevation	0.56	
245	VRS-TS-651	D - Penetration Area Temperature	R/B RCA	W	25'-3"	FA2-153-05	above flood elevation	0.56	
246	VRS-TS-654	D - Penetration Area Temperature	R/B RCA	W	25'-3"	FA2-153-05	above flood elevation	0.56	
247	VRS-TS-655	D - Penetration Area Temperature	R/B RCA	W	25'-3"	FA2-153-05	above flood elevation	0.56	

Table 3K-2 R/B RCA Components Protected From Internal Flooding (Sheet 20 of 22)

Item No.	Equipment Tag	Description	Location					Flood Elevation above Floor [ft]	Notes
			Building	Side	Floor Elevation	Fire Zone No.	Location Elevation above Floor		
248	VRS-TS-306	A - Safeguard Component Area Temperature	R/B RCA	E	3'-7"	FA2-154-03	N/A	-	1
249	VRS-TS-307	A - Safeguard Component Area Temperature	R/B RCA	E	3'-7"	FA2-154-03	N/A	-	1
250	VRS-TS-305	A - Safeguard Component Area Temperature	R/B RCA	E	3'-7"	FA2-154-03	N/A	-	1
251	VRS-TS-316	B - Safeguard Component Area Temperature	R/B RCA	E	3'-7"	FA2-151-03	N/A	-	1
252	VRS-TS-317	B - Safeguard Component Area Temperature	R/B RCA	E	3'-7"	FA2-151-03	N/A	-	1
253	VRS-TS-315	B - Safeguard Component Area Temperature	R/B RCA	E	3'-7"	FA2-151-03	N/A	-	1
254	VRS-TS-326	C - Safeguard Component Area Temperature	R/B RCA	W	3'-7"	FA2-152-03	N/A	-	1
255	VRS-TS-327	C - Safeguard Component Area Temperature	R/B RCA	W	3'-7"	FA2-152-03	N/A	-	1
256	VRS-TS-325	C - Safeguard Component Area Temperature	R/B RCA	W	3'-7"	FA2-152-03	N/A	-	1
257	VRS-TS-336	D - Safeguard Component Area Temperature	R/B RCA	W	3'-7"	FA2-153-03	N/A	-	1
258	VRS-TS-337	D - Safeguard Component Area Temperature	R/B RCA	W	3'-7"	FA2-153-03	N/A	-	1
259	VRS-TS-335	D - Safeguard Component Area Temperature	R/B RCA	W	3'-7"	FA2-153-03	N/A	-	1
260	VRS-TS-601	A - Annulus Emergency Exhaust Filtration Unit Area Temperature	R/B RCA	E	50'-2"	FA2-416-01	above flood elevation	0.54	

Table 3K-2 R/B RCA Components Protected From Internal Flooding (Sheet 21 of 22)

Item No.	Equipment Tag	Description	Location					Flood Elevation above Floor [ft]	Notes
			Building	Side	Floor Elevation	Fire Zone No.	Location Elevation above Floor		
261	VRS-TS-604	A - Annulus Emergency Exhaust Filtration Unit Area Temperature	R/B RCA	E	50'-2"	FA2-416-01	above flood elevation	0.54	
262	VRS-TS-605	A - Annulus Emergency Exhaust Filtration Unit Area Temperature	R/B RCA	E	50'-2"	FA2-416-01	above flood elevation	0.54	
263	VRS-TS-611	B - Annulus Emergency Exhaust Filtration Unit Area Temperature	R/B RCA	W	50'-2"	FA2-417-01	above flood elevation	0.61	
264	VRS-TS-614	B - Annulus Emergency Exhaust Filtration Unit Area Temperature	R/B RCA	W	50'-2"	FA2-417-01	above flood elevation	0.61	
265	VRS-TS-615	B - Annulus Emergency Exhaust Filtration Unit Area Temperature	R/B RCA	W	50'-2"	FA2-417-01	above flood elevation	0.61	
266	NCS-MOV-146A	Motor Operated Valve	R/B RCA	E	3'-7"	FA2-209-03	above flood elevation	0.70	
267	NCS-MOV-146B	Motor Operated Valve	R/B RCA	E	3'-7"	FA2-151-04	above flood elevation	0.70	
268	NCS-MOV-146C	Motor Operated Valve	R/B RCA	W	3'-7"	FA2-152-04	above flood elevation	0.79	
269	NCS-MOV-146D	Motor Operated Valve	R/B RCA	W	3'-7"	FA2-128-02	above flood elevation	0.79	
270	SFS-MOV-001A	Motor Operated Valve	R/B RCA	E	3'-7"	FA2-209-01	above flood elevation	0.70	
271	SFS-MOV-002A	Motor Operated Valve	R/B RCA	E	3'-7"	FA2-209-01	above flood elevation	0.70	
272	SFS-MOV-001B	Motor Operated Valve	R/B RCA	W	3'-7"	FA2-128-04	above flood elevation	0.79	

Table 3K-2 R/B RCA Components Protected From Internal Flooding (Sheet 22 of 22)

Item No.	Equipment Tag	Description	Location					Flood Elevation above Floor [ft]	Notes
			Building	Side	Floor Elevation	Fire Zone No.	Location Elevation above Floor		
273	SFS-MOV-002B	Motor Operated Valve	R/B RCA	W	3'-7"	FA2-128-04	above flood elevation	0.79	
274	SFS-MPP-001A	A-Spent Fuel Pit Pump	R/B RCA	E	3'-7"	FA2-209-02	above flood elevation	0.70	
275	SFS-MPP-001B	B-Spent Fuel Pit Pump	R/B RCA	W	3'-7"	FA2-128-03	above flood elevation	0.79	
276	NCS-MOV-241	Motor Operated Valve	R/B RCA	W	76'-5"	FA2-214-07	above flood elevation	0.83	
277	NCS-MOV-242	Motor Operated Valve	R/B RCA	W	76'-5"	FA2-214-07	above flood elevation	0.83	
278	NCS-AOV-057A	Air Operated Valve	R/B RCA	E	25'-3"	FA2-316-01	above flood elevation	0.43	
279	NCS-AOV-057B	Air Operated Valve	R/B RCA	W	25'-3"	FA2-318-01	above flood elevation	0.56	
280	NCS-AOV-058A	Air Operated Valve	R/B RCA	E	25'-3"	FA2-316-01	above flood elevation	0.43	
281	NCS-AOV-058B	Air Operated Valve	R/B RCA	W	25'-2"	FA2-318-01	above flood elevation	0.56	
282	FSS-AOV-001	Air Operated Valve	R/B RCA	W	25'-3"	FA2-152-06	above flood elevation	0.56	
283	FSS-MOV-004	Motor Operated Valve	R/B RCA	E	25'-3"	FA2-151-06	above flood elevation	0.43	

Note:

1. These components are protected by water-tight door and floor drain isolation valve against in-flow of flooding occurring outside of compartment. In addition, these components are not required to be protected against flooding occurring inside the compartment due to redundancy of other trains/components.

2. These components are protected by water-tight door. In addition, these components are not required to be protected against flooding occurring inside the compartment due to redundancy of other trains/components.

Table 3K-3 R/B NRCA Components Protected From Internal Flooding (Sheet 1 of 27)

Item No.	Equipment Tag	Description	Location					Flood Elevation above Floor [ft]	Notes
			Building	Side	Floor Elevation	Fire Zone No.	Location Elevation above Floor		
1	EFS-MPP-001A	A-Emergency Feedwater Pump	R/B NRCA	E	-26'-4"	FA2-102-01	above flood elevation	0.42	
2	EFS-MPP-001B	B-Emergency Feedwater Pump	R/B NRCA	E	-26'-4"	FA2-103-01	above flood elevation	0.42	
3	EFS-MPP-001C	C-Emergency Feedwater Pump	R/B NRCA	W	-26'-4"	FA2-109-01	above flood elevation	0.43	
4	EFS-MPP-001D	D-Emergency Feedwater Pump	R/B NRCA	W	-26'-4"	FA2-108-01	above flood elevation	0.43	
5	EFS-MPT-001A	A-Emergency Feedwater Pit	R/B NRCA	E	76'-5"	FA2-501-02	N/A	-	2
6	EFS-MPK-001B	B-Emergency Feedwater Pit	R/B NRCA	W	76'-5"	FA2-512-01	N/A	-	2
7	EFS-MOV-014A	Motor Operated Valve	R/B NRCA	E	-26'-4"	FA2-102-01	above flood elevation	0.42	
8	EFS-MOV-014B	Motor Operated Valve	R/B NRCA	E	-26'-4"	FA2-103-01	above flood elevation	0.42	
9	EFS-MOV-014C	Motor Operated Valve	R/B NRCA	W	-26'-4"	FA2-109-01	above flood elevation	0.43	
10	EFS-MOV-014D	Motor Operated Valve	R/B NRCA	W	-26'-4"	FA2-108-01	above flood elevation	0.43	
11	EFS-MOV-017A	A-Emergency Feedwater Control Valve	R/B NRCA	E	65'-0"	FA2-414-01	above flood elevation	4.62	
12	EFS-MOV-017B	B-Emergency Feedwater Control Valve	R/B NRCA	E	65'-0"	FA2-414-01	above flood elevation	4.62	
13	EFS-MOV-017C	C-Emergency Feedwater Control Valve	R/B NRCA	W	65'-0"	FA2-415-01	above flood elevation	4.62	
14	EFS-MOV-017D	D-Emergency Feedwater Control Valve	R/B NRCA	W	65'-0"	FA2-415-01	above flood elevation	4.62	
15	EFS-MOV-019A	A-Emergency Feedwater Isolation Valve	R/B NRCA	E	65'-0"	FA2-414-01	above flood elevation	4.62	
16	EFS-MOV-019B	B-Emergency Feedwater Isolation Valve	R/B NRCA	E	65'-0"	FA2-414-01	above flood elevation	4.62	
17	EFS-MOV-019C	C-Emergency Feedwater Isolation Valve	R/B NRCA	W	65'-0"	FA2-415-01	above flood elevation	4.62	
18	EFS-MOV-019D	D-Emergency Feedwater Isolation Valve	R/B NRCA	W	65'-0"	FA2-415-01	above flood elevation	4.62	

Table 3K-3 R/B NRCA Components Protected From Internal Flooding (Sheet 2 of 27)

Item No.	Equipment Tag	Description	Location					Flood Elevation above Floor [ft]	Notes
			Building	Side	Floor Elevation	Fire Zone No.	Location Elevation above Floor		
19	EFS-MOV-101A	A-Emergency Feedwater Pump A-Main Steam Line Steam Isolation Valve	R/B NRCA	E	65'-0"	FA2-414-01	above flood elevation	4.62	
20	EFS-MOV-101B	A-Emergency Feedwater Pump B-Main Steam Line Steam Isolation Valve	R/B NRCA	E	65'-0"	FA2-414-01	above flood elevation	4.62	
21	EFS-MOV-101C	D-Emergency Feedwater Pump C-Main Steam Line Steam Isolation Valve	R/B NRCA	W	65'-0"	FA2-415-01	above flood elevation	4.62	
22	EFS-MOV-101D	D-Emergency Feedwater Pump D-Main Steam Line Steam Isolation Valve	R/B NRCA	W	65'-0"	FA2-415-01	above flood elevation	4.62	
23	EFS-MOV-103A, EFS-MOV-103B	A-Emergency Feedwater Pump Actuation Valve on A-steam supply line, A-Emergency Feedwater Pump Actuation Valve on B-steam supply line	R/B NRCA	E	65'-0"	FA2-414-01	above flood elevation	4.62	
24	EFS-MOV-103C, EFS-MOV-103D	D-Emergency Feedwater Pump Actuation Valve on C-steam supply line, D-Emergency Feedwater Pump Actuation Valve on D-steam supply line	R/B NRCA	W	65'-0"	FA2-415-01	above flood elevation	4.62	
25	FWS-SMV-512A	A-Main Feedwater Isolation Valve	R/B NRCA	E	65'-0"	FA2-414-01	below flood elevation	4.62	3
26	FWS-SMV-512B	B-Main Feedwater Isolation Valve	R/B NRCA	E	65'-0"	FA2-414-01	below flood elevation	4.62	3
27	FWS-SMV-512C	C-Main Feedwater Isolation Valve	R/B NRCA	W	65'-0"	FA2-415-01	below flood elevation	4.62	3
28	FWS-SMV-512D	D-Main Feedwater Isolation Valve	R/B NRCA	W	65'-0"	FA2-415-01	below flood elevation	4.62	3

Table 3K-3 R/B NRCA Components Protected From Internal Flooding (Sheet 3 of 27)

Item No.	Equipment Tag	Description	Location					Flood Elevation above Floor [ft]	Notes
			Building	Side	Floor Elevation	Fire Zone No.	Location Elevation above Floor		
29	MSS-SRV-509A	A1-Main Steam Safety Valve	R/B NRCA	E	65'-0"	FA2-414-01	above flood elevation	4.62	
30	MSS-SRV-510A	A2-Main Steam Safety Valve	R/B NRCA	E	65'-0"	FA2-414-01	above flood elevation	4.62	
31	MSS-SRV-511A	A3-Main Steam Safety Valve	R/B NRCA	E	65'-0"	FA2-414-01	above flood elevation	4.62	
32	MSS-SRV-512A	A4-Main Steam Safety Valve	R/B NRCA	E	65'-0"	FA2-414-01	above flood elevation	4.62	
33	MSS-SRV-513A	A5-Main Steam Safety Valve	R/B NRCA	E	65'-0"	FA2-414-01	above flood elevation	4.62	
34	MSS-SRV-514A	A6-Main Steam Safety Valve	R/B NRCA	E	65'-0"	FA2-414-01	above flood elevation	4.62	
35	MSS-SRV-509B	B1-Main Steam Safety Valve	R/B NRCA	E	65'-0"	FA2-414-01	above flood elevation	4.62	
36	MSS-SRV-510B	B2-Main Steam Safety Valve	R/B NRCA	E	65'-0"	FA2-414-01	above flood elevation	4.62	
37	MSS-SRV-511B	B3-Main Steam Safety Valve	R/B NRCA	E	65'-0"	FA2-414-01	above flood elevation	4.62	
38	MSS-SRV-512B	B4-Main Steam Safety Valve	R/B NRCA	E	65'-0"	FA2-414-01	above flood elevation	4.62	
39	MSS-SRV-513B	B5-Main Steam Safety Valve	R/B NRCA	E	65'-0"	FA2-414-01	above flood elevation	4.62	
40	MSS-SRV-514B	B6-Main Steam Safety Valve	R/B NRCA	E	65'-0"	FA2-414-01	above flood elevation	4.62	
41	MSS-SRV-509C	C1-Main Steam Safety Valve	R/B NRCA	W	65'-0"	FA2-415-01	above flood elevation	4.62	
42	MSS-SRV-510C	C2-Main Steam Safety Valve	R/B NRCA	W	65'-0"	FA2-415-01	above flood elevation	4.62	
43	MSS-SRV-511C	C3-Main Steam Safety Valve	R/B NRCA	W	65'-0"	FA2-415-01	above flood elevation	4.62	
44	MSS-SRV-512C	C4-Main Steam Safety Valve	R/B NRCA	W	65'-0"	FA2-415-01	above flood elevation	4.62	
45	MSS-SRV-513C	C5-Main Steam Safety Valve	R/B NRCA	W	65'-0"	FA2-415-01	above flood elevation	4.62	
46	MSS-SRV-514C	C6-Main Steam Safety Valve	R/B NRCA	W	65'-0"	FA2-415-01	above flood elevation	4.62	
47	MSS-SRV-509D	D1-Main Steam Safety Valve	R/B NRCA	W	65'-0"	FA2-415-01	above flood elevation	4.62	
48	MSS-SRV-510D	D2-Main Steam Safety Valve	R/B NRCA	W	65'-0"	FA2-415-01	above flood elevation	4.62	
49	MSS-SRV-511D	D3-Main Steam Safety Valve	R/B NRCA	W	65'-0"	FA2-415-01	above flood elevation	4.62	
50	MSS-SRV-512D	D4-Main Steam Safety Valve	R/B NRCA	W	65'-0"	FA2-415-01	above flood elevation	4.62	
51	MSS-SRV-513D	D5-Main Steam Safety Valve	R/B NRCA	W	65'-0"	FA2-415-01	above flood elevation	4.62	

Table 3K-3 R/B NRCA Components Protected From Internal Flooding (Sheet 4 of 27)

Item No.	Equipment Tag	Description	Location					Flood Elevation above Floor [ft]	Notes
			Building	Side	Floor Elevation	Fire Zone No.	Location Elevation above Floor		
52	MSS-SRV-514D	D6-Main Steam Safety Valve	R/B NRCA	W	65'-0"	FA2-415-01	above flood elevation	4.62	
53	MSS-MOV-507A	A-Main Steam Relief Valve Block Valve	R/B NRCA	E	65'-0"	FA2-414-01	above flood elevation	4.62	
54	MSS-MOV-507B	B-Main Steam Relief Valve Block Valve	R/B NRCA	E	65'-0"	FA2-414-01	above flood elevation	4.62	
55	MSS-MOV-507C	C-Main Steam Relief Valve Block Valve	R/B NRCA	W	65'-0"	FA2-415-01	above flood elevation	4.62	
56	MSS-MOV-507D	D-Main Steam Relief Valve Block Valve	R/B NRCA	W	65'-0"	FA2-415-01	above flood elevation	4.62	
57	MSS-MOV-508A	A-Main Steam Depressurization Valve	R/B NRCA	E	65'-0"	FA2-414-01	above flood elevation	4.62	
58	MSS-MOV-508B	B-Main Steam Depressurization Valve	R/B NRCA	E	65'-0"	FA2-414-01	above flood elevation	4.62	
59	MSS-MOV-508C	C-Main Steam Depressurization Valve	R/B NRCA	W	65'-0"	FA2-415-01	above flood elevation	4.62	
60	MSS-MOV-508D	D-Main Steam Depressurization Valve	R/B NRCA	W	65'-0"	FA2-415-01	above flood elevation	4.62	
61	MSS-SMV-515A	A-Main Steam Isolation Valve	R/B NRCA	E	65'-0"	FA2-414-01	above flood elevation	4.62	
62	MSS-SMV-515B	B-Main Steam Isolation Valve	R/B NRCA	E	65'-0"	FA2-414-01	above flood elevation	4.62	
63	MSS-SMV-515C	C-Main Steam Isolation Valve	R/B NRCA	W	65'-0"	FA2-415-01	above flood elevation	4.62	
64	MSS-SMV-515D	D-Main Steam Isolation Valve	R/B NRCA	W	65'-0"	FA2-415-01	above flood elevation	4.62	
65	MSS-HCV-565	A-Main Steam Bypass Isolation Valve	R/B NRCA	E	65'-0"	FA2-414-01	above flood elevation	4.62	
66	MSS-HCV-575	B-Main Steam Bypass Isolation Valve	R/B NRCA	E	65'-0"	FA2-414-01	above flood elevation	4.62	
67	MSS-HCV-585	C-Main Steam Bypass Isolation Valve Hand Control Valve	R/B NRCA	W	65'-0"	FA2-415-01	above flood elevation	4.62	

Table 3K-3 R/B NRCA Components Protected From Internal Flooding (Sheet 5 of 27)

Item No.	Equipment Tag	Description	Location					Flood Elevation above Floor [ft]	Notes
			Building	Side	Floor Elevation	Fire Zone No.	Location Elevation above Floor		
68	MSS-HCV-595	D-Main Steam Bypass Isolation Valve Hand Control Valve	R/B NRCA	W	65'-0"	FA2-415-01	above flood elevation	4.62	
69	MSS-PCV-515	A-Main Steam Relief Valve	R/B NRCA	E	65'-0"	FA2-414-01	above flood elevation	4.62	
70	MSS-PCV-525	B-Main Steam Relief Valve	R/B NRCA	E	65'-0"	FA2-414-01	above flood elevation	4.62	
71	MSS-PCV-535	C-Main Steam Relief Valve	R/B NRCA	W	65'-0"	FA2-415-01	above flood elevation	4.62	
72	MSS-PCV-545	D-Main Steam Relief Valve	R/B NRCA	W	65'-0"	FA2-415-01	above flood elevation	4.62	
73	MSS-MOV-701A	A-Main Steam Drain Isolation Valve	R/B NRCA	E	65'-0"	FA2-414-01	above flood elevation	4.62	
74	MSS-MOV-701B	B-Main Steam Drain Isolation Valve	R/B NRCA	E	65'-0"	FA2-414-01	above flood elevation	4.62	
75	MSS-MOV-701C	C-Main Steam Drain Isolation Valve	R/B NRCA	W	65'-0"	FA2-415-01	above flood elevation	4.62	
76	MSS-MOV-701D	D-Main Steam Drain Isolation Valve	R/B NRCA	W	65'-0"	FA2-415-01	above flood elevation	4.62	
77	NCS-MPP-001A	A-Component Cooling Water Pump	R/B NRCA	E	-26'-4"	FA2-104-01	above flood elevation	0.42	
78	NCS-MPP-001B	B-Component Cooling Water Pump	R/B NRCA	E	-26'-4"	FA2-105-01	above flood elevation	0.42	
79	NCS-MPP-001C	C-Component Cooling Water Pump	R/B NRCA	W	-26'-4"	FA2-106-01	above flood elevation	0.43	
80	NCS-MPP-001D	D-Component Cooling Water Pump	R/B NRCA	W	-26'-4"	FA2-107-01	above flood elevation	0.43	
81	NCS-MTK-001A	A-Component Cooling Water Surge tank	R/B NRCA	E	101'-0"	FA2-601-01	below flood elevation	1.52	4
82	NCS-MTK-001B	B-Component Cooling Water Surge Tank	R/B NRCA	W	101'-0"	FA2-602-01	below flood elevation	3.09	5

Table 3K-3 R/B NRCA Components Protected From Internal Flooding (Sheet 6 of 27)

Item No.	Equipment Tag	Description	Location					Flood Elevation above Floor [ft]	Notes
			Building	Side	Floor Elevation	Fire Zone No.	Location Elevation above Floor		
83	NCS-MHX-001A	A-Component Cooling Water Heat Exchanger	R/B NRCA	E	-26'-4"	FA2-104-01	above flood elevation	0.42	
84	NCS-MHX-001B	B-Component Cooling Water Heat Exchanger	R/B NRCA	E	-26'-4"	FA2-105-01	above flood elevation	0.42	
85	NCS-MHX-001C	C-Component Cooling Water Heat Exchanger	R/B NRCA	W	-26'-4"	FA2-106-01	above flood elevation	0.43	
86	NCS-MHX-001D	D-Component Cooling Water Heat Exchanger	R/B NRCA	W	-26'-4"	FA2-107-01	above flood elevation	0.43	
87	NCS-SRV-003A	Safety Valve	R/B NRCA	E	101'-0"	FA2-601-01	above flood elevation	1.52	
88	NCS-SRV-003B	Safety Valve	R/B NRCA	W	101'-0"	FA2-602-01	above flood elevation	3.09	
89	NCS-MOV-007A	Motor Operated Valve	R/B NRCA	E	-26'-4"	FA2-104-01	above flood elevation	0.42	
90	NCS-MOV-007B	Motor Operated Valve	R/B NRCA	E	-26'-4"	FA2-105-01	above flood elevation	0.42	
91	NCS-MOV-020A	Motor Operated Valve	R/B NRCA	E	-26'-4"	FA2-104-01	above flood elevation	0.42	
92	NCS-MOV-020B	Motor Operated Valve	R/B NRCA	E	-26'-4"	FA2-105-01	above flood elevation	0.42	
93	NCS-VLV-035A	Safety Valve	R/B NRCA	E	-26'-4"	FA2-105-01	above flood elevation	0.42	
94	NCS-VLV-035B	Safety Valve	R/B NRCA	W	-26'-4"	FA2-106-01	above flood elevation	0.43	
95	NCS-RCV-056A	Radiation Control Valve	R/B NRCA	E	101'-0"	FA2-601-01	above flood elevation	1.52	
96	NCS-LCV-010A	Level Control Valve	R/B NRCA	E	101'-0"	FA2-603-01	above flood elevation	1.52	
97	NCS-MOV-007C	Motor Operated Valve	R/B NRCA	W	-26'-4"	FA2-106-01	above flood elevation	0.43	
98	NCS-MOV-007D	Motor Operated Valve	R/B NRCA	W	-26'-4"	FA2-107-01	above flood elevation	0.43	
99	NCS-MOV-020C	Motor Operated Valve	R/B NRCA	W	-26'-4"	FA2-106-01	above flood elevation	0.43	
100	NCS-MOV-020D	Motor Operated Valve	R/B NRCA	W	-26'-4"	FA2-107-01	above flood elevation	0.43	
101	NCS-RCV-056B	Radiation Control Valve	R/B NRCA	W	101'-0"	FA2-602-01	above flood elevation	3.09	
102	NCS-LCV-010C	Level Control Valve	R/B NRCA	W	101'-0"	FA2-604-01	below flood elevation	3.09	7
103	NCS-PCV-012	Pressure Control Valve	R/B NRCA	E	101'-0"	FA2-601-01	above flood elevation	1.52	

Table 3K-3 R/B NRCA Components Protected From Internal Flooding (Sheet 7 of 27)

Item No.	Equipment Tag	Description	Location					Flood Elevation above Floor [ft]	Notes
			Building	Side	Floor Elevation	Fire Zone No.	Location Elevation above Floor		
104	NCS-PCV-022	Pressure Control Valve	R/B NRCA	W	101'-0"	FA2-602-01	above flood elevation	3.09	
105	SGS-AOV-001A	Air Operated Valve	R/B NRCA	E	65'-0"	FA2-414-01	above flood elevation	4.62	
106	SGS-AOV-001B	Air Operated Valve	R/B NRCA	E	65'-0"	FA2-414-01	above flood elevation	4.62	
107	SGS-AOV-001C	Air Operated Valve	R/B NRCA	W	65'-0"	FA2-415-01	above flood elevation	4.62	
108	SGS-AOV-001D	Air Operated Valve	R/B NRCA	W	65'-0"	FA2-415-01	above flood elevation	4.62	
109	SGS-AOV-002A	Air Operated Valve	R/B NRCA	E	65'-0"	FA2-414-01	above flood elevation	4.62	
110	SGS-AOV-002B	Air Operated Valve	R/B NRCA	E	65'-0"	FA2-414-01	above flood elevation	4.62	
111	SGS-AOV-002C	Air Operated Valve	R/B NRCA	W	65'-0"	FA2-415-01	above flood elevation	4.62	
112	SGS-AOV-002D	Air Operated Valve	R/B NRCA	W	65'-0"	FA2-415-01	above flood elevation	4.62	
113	VRS-MAH-101A	A-Main Control Room Air Handling Unit	R/B NRCA	E	50'-2"	FA2-402-01	above flood elevation	0.78	
114	VRS-MAH-101B	B-Main Control Room Air Handling Unit	R/B NRCA	E	50'-2"	FA2-401-01	above flood elevation	0.78	
115	VRS-MAH-101C	C-Main Control Room Air Handling Unit	R/B NRCA	W	50'-2"	FA2-403-01	above flood elevation	0.77	
116	VRS-MAH-101D	D-Main Control Room Air Handling Unit	R/B NRCA	W	50'-2"	FA2-404-01	above flood elevation	0.77	
117	VRS-MFN-101A	A-Main Control Room Air Handling Unit Fan	R/B NRCA	E	50'-2"	FA2-402-01	above flood elevation	0.78	
118	VRS-MFN-101B	B-Main Control Room Air Handling Unit Fan	R/B NRCA	E	50'-2"	FA2-401-01	above flood elevation	0.78	
119	VRS-MFN-101C	C-Main Control Room Air Handling Unit Fan	R/B NRCA	W	50'-2"	FA2-403-01	above flood elevation	0.77	
120	VRS-MFN-101D	D-Main Control Room Air Handling Unit Fan	R/B NRCA	W	50'-2"	FA2-404-01	above flood elevation	0.77	

Table 3K-3 R/B NRCA Components Protected From Internal Flooding (Sheet 8 of 27)

Item No.	Equipment Tag	Description	Location					Flood Elevation above Floor [ft]	Notes
			Building	Side	Floor Elevation	Fire Zone No.	Location Elevation above Floor		
121	VRS-MCL-101A	A-Main Control Room Air Handling Unit Cooling Coil	R/B NRCA	E	50'-2"	FA2-402-01	above flood elevation	0.78	
122	VRS-MCL-101B	B-Main Control Room Air Handling Unit Cooling Coil	R/B NRCA	E	50'-2"	FA2-401-01	above flood elevation	0.78	
123	VRS-MCL-101C	C-Main Control Room Air Handling Unit Cooling Coil	R/B NRCA	W	50'-2"	FA2-403-01	above flood elevation	0.77	
124	VRS-MCL-101D	D-Main Control Room Air Handling Unit Cooling Coil	R/B NRCA	W	50'-2"	FA2-404-01	above flood elevation	0.77	
125	VRS-MEH-101A	A-Main Control Room Air Handling Unit Electric Heating Coil	R/B NRCA	E	50'-2"	FA2-402-01	above flood elevation	0.78	
126	VRS-MEH-101B	B-Main Control Room Air Handling Unit Electric Heating Coil	R/B NRCA	E	50'-2"	FA2-401-01	above flood elevation	0.78	
127	VRS-MEH-101C	C-Main Control Room Air Handling Unit Electric Heating Coil	R/B NRCA	W	50'-2"	FA2-403-01	above flood elevation	0.77	
128	VRS-MEH-101D	D-Main Control Room Air Handling Unit Electric Heating Coil	R/B NRCA	W	50'-2"	FA2-404-01	above flood elevation	0.77	
129	VRS-MFU-111A	A-Main Control Room Emergency Filtration Unit	R/B NRCA	E	50'-2"	FA2-405-01	above flood elevation	0.78	
130	VRS-MFU-111B	B-Main Control Room Emergency Filtration Unit	R/B NRCA	W	50'-2"	FA2-406-01	above flood elevation	0.77	
131	VRS-MFN-111A	A-Main Control Room Emergency Filtration Unit Fan	R/B NRCA	E	50'-2"	FA2-405-01	above flood elevation	0.78	
132	VRS-MFN-111B	B-Main Control Room Emergency Filtration Unit Fan	R/B NRCA	W	50'-2"	FA2-406-01	above flood elevation	0.77	

Table 3K-3 R/B NRCA Components Protected From Internal Flooding (Sheet 9 of 27)

Item No.	Equipment Tag	Description	Location					Flood Elevation above Floor [ft]	Notes
			Building	Side	Floor Elevation	Fire Zone No.	Location Elevation above Floor		
133	VRS-MEH-111A	A-Main Control Room Emergency Filtration Unit Electric Heating Coil	R/B NRCA	E	50'-2"	FA2-405-01	above flood elevation	0.78	
134	VRS-MEH-111B	B-Main Control Room Emergency Filtration Unit Electric Heating Coil	R/B NRCA	W	50'-2"	FA2-406-01	above flood elevation	0.77	
135	VRS-EHD-101A	Electro Hydraulic Operated Damper	R/B NRCA	E	50'-2"	FA2-424-01	above flood elevation	0.78	
136	VRS-EHD-101B	Electro Hydraulic Operated Damper	R/B NRCA	W	50'-2"	FA2-423-01	above flood elevation	0.77	
137	VRS-EHD-102A	Electro Hydraulic Operated Damper	R/B NRCA	E	50'-2"	FA2-424-01	above flood elevation	0.78	
138	VRS-EHD-102B	Electro Hydraulic Operated Damper	R/B NRCA	W	50'-2"	FA2-423-01	above flood elevation	0.77	
139	VRS-AOD-103A	Air Operated Damper	R/B NRCA	E	50'-2"	FA2-412-01	above flood elevation	0.78	
140	VRS-AOD-103B	Air Operated Damper	R/B NRCA	W	50'-2"	FA2-413-01	above flood elevation	0.77	
141	VRS-EHD-104A	Electro Hydraulic Operated Damper	R/B NRCA	E	50'-2"	FA2-412-01	above flood elevation	0.78	
142	VRS-EHD-104B	Electro Hydraulic Operated Damper	R/B NRCA	W	50'-2"	FA2-413-01	above flood elevation	0.77	
143	VRS-EHD-105A	Electro Hydraulic Operated Damper	R/B NRCA	E	50'-2"	FA2-412-01	above flood elevation	0.78	
144	VRS-EHD-105B	Electro Hydraulic Operated Damper	R/B NRCA	E	50'-2"	FA2-412-01	above flood elevation	0.78	
145	VRS-EHD-105C	Electro Hydraulic Operated Damper	R/B NRCA	W	50'-2"	FA2-413-01	above flood elevation	0.77	
146	VRS-EHD-105D	Electro Hydraulic Operated Damper	R/B NRCA	W	50'-2"	FA2-413-01	above flood elevation	0.77	

Table 3K-3 R/B NRCA Components Protected From Internal Flooding (Sheet 10 of 27)

Item No.	Equipment Tag	Description	Location					Flood Elevation above Floor [ft]	Notes
			Building	Side	Floor Elevation	Fire Zone No.	Location Elevation above Floor		
147	VRS-EHD-106A	Electro HydraulicOperated Damper	R/B NRCA	E	50'-2"	FA2-412-01	above flood elevation	0.78	
148	VRS-EHD-106B	Electro Hydraulic Operated Damper	R/B NRCA	E	50'-2"	FA2-412-01	above flood elevation	0.78	
149	VRS-EHD-106C	Electro Hydraulic Operated Damper	R/B NRCA	W	50'-2"	FA2-413-01	above flood elevation	0.77	
150	VRS-EHD-106D	Electro Hydraulic Operated Damper	R/B NRCA	W	50'-2"	FA2-413-01	above flood elevation	0.77	
151	VRS-EHD-107A	Electro Hydraulic Operated Damper	R/B NRCA	E	50'-2"	FA2-412-01	above flood elevation	0.78	
152	VRS-EHD-107B	Electro Hydraulic Operated Damper	R/B NRCA	W	50'-2"	FA2-413-01	above flood elevation	0.77	
153	VRS-MOD-111A	Motor Operated Damper	R/B NRCA	E	50'-2"	FA2-412-01	above flood elevation	0.78	
154	VRS-MOD-111B	Motor Operated Damper	R/B NRCA	W	50'-2"	FA2-413-01	above flood elevation	0.77	
155	VRS-MOD-112A	Motor Operated Damper	R/B NRCA	E	50'-2"	FA2-412-01	above flood elevation	0.78	
156	VRS-MOD-112B	Motor Operated Damper	R/B NRCA	W	50'-2"	FA2-413-01	above flood elevation	0.77	
157	VRS-MOD-113A	Motor Operated Damper	R/B NRCA	E	50'-2"	FA2-405-01	above flood elevation	0.78	
158	VRS-MOD-113B	Motor Operated Damper	R/B NRCA	W	50'-2"	FA2-406-01	above flood elevation	0.77	
159	VRS-AOD-121	Air Operated Damper	R/B NRCA	E	26'-11"	FA2-308-02	N/A	-	6
160	VRS-AOD-122	Air Operated Damper	R/B NRCA	E	50'-2"	FA2-412-01	above flood elevation	0.78	
161	VRS-AOD-131	Air Operated Damper	R/B NRCA	W	26'-11"	FA2-308-01	N/A	-	6
162	VRS-AOD-132	Air Operated Damper	R/B NRCA	W	50'-2"	FA2-413-01	above flood elevation	0.77	
163	VRS-MAH-201A	A-Class 1E Electrical Room Air Handling Unit	R/B NRCA	E	50'-2"	FA2-402-01	above flood elevation	0.78	
164	VRS-MAH-201B	B-Class 1E Electrical Room Air Handling Unit	R/B NRCA	E	50'-2"	FA2-401-01	above flood elevation	0.78	

Table 3K-3 R/B NRCA Components Protected From Internal Flooding (Sheet 11 of 27)

Item No.	Equipment Tag	Description	Location					Flood Elevation above Floor [ft]	Notes
			Building	Side	Floor Elevation	Fire Zone No.	Location Elevation above Floor		
165	VRS-MAH-201C	C-Class 1E Electrical Room Air Handling Unit	R/B NRCA	W	50'-2"	FA2-403-01	above flood elevation	0.77	
166	VRS-MAH-201D	D-Class 1E Electrical Room Air Handling Unit	R/B NRCA	W	50'-2"	FA2-404-01	above flood elevation	0.77	
167	VRS-MFN-201A	A-Class 1E Electrical Room Air Handling Unit Fan	R/B NRCA	E	50'-2"	FA2-402-01	above flood elevation	0.78	
168	VRS-MFN-201B	B-Class 1E Electrical Room Air Handling Unit Fan	R/B NRCA	E	50'-2"	FA2-401-01	above flood elevation	0.78	
169	VRS-MFN-201C	C-Class 1E Electrical Room Air Handling Unit Fan	R/B NRCA	W	50'-2"	FA2-403-01	above flood elevation	0.77	
170	VRS-MFN-201D	D-Class 1E Electrical Room Air Handling Unit Fan	R/B NRCA	W	50'-2"	FA2-404-01	above flood elevation	0.77	
171	VRS-MFN-202A	A-Class 1E Electrical Room Return Air Fan	R/B NRCA	E	50'-2"	FA2-402-01	above flood elevation	0.78	
172	VRS-MFN-202B	B-Class 1E Electrical Room Return Air Fan	R/B NRCA	E	50'-2"	FA2-401-01	above flood elevation	0.78	
173	VRS-MFN-202C	C-Class 1E Electrical Room Return Air Fan	R/B NRCA	W	50'-2"	FA2-403-01	above flood elevation	0.77	
174	VRS-MFN-202D	D-Class 1E Electrical Room Return Air Fan	R/B NRCA	W	50'-2"	FA2-404-01	above flood elevation	0.77	
175	VRS-MCL-201A	A-Class 1E Electrical Room Air Handling Unit Cooling Coil	R/B NRCA	E	50'-2"	FA2-402-01	above flood elevation	0.78	
176	VRS-MCL-201B	B-Class 1E Electrical Room Air Handling Unit Cooling Coil	R/B NRCA	E	50'-2"	FA2-401-01	above flood elevation	0.78	
177	VRS-MCL-201C	C-Class 1E Electrical Room Air Handling Unit Cooling Coil	R/B NRCA	W	50'-2"	FA2-403-01	above flood elevation	0.77	
178	VRS-MCL-201D	D-Class 1E Electrical Room Air Handling Unit Cooling Coil	R/B NRCA	W	50'-2"	FA2-404-01	above flood elevation	0.77	

Table 3K-3 R/B NRCA Components Protected From Internal Flooding (Sheet 12 of 27)

Item No.	Equipment Tag	Description	Location					Flood Elevation above Floor [ft]	Notes
			Building	Side	Floor Elevation	Fire Zone No.	Location Elevation above Floor		
179	VRS-MEH-201A	A-Class 1E Electrical Room Air Handling Unit Electric Heating Coil	R/B NRCA	E	50'-2"	FA2-402-01	above flood elevation	0.78	
180	VRS-MEH-201B	B-Class 1E Electrical Room Air Handling Unit Electric Heating Coil	R/B NRCA	E	50'-2"	FA2-401-01	above flood elevation	0.78	
181	VRS-MEH-201C	C-Class 1E Electrical Room Air Handling Unit Electric Heating Coil	R/B NRCA	W	50'-2"	FA2-403-01	above flood elevation	0.77	
182	VRS-MEH-201D	D-Class 1E Electrical Room Air Handling Unit Electric Heating Coil	R/B NRCA	W	50'-2"	FA2-404-01	above flood elevation	0.77	
183	VRS-MEH-202A	A-Class 1E I&C Room In-Duct Heater	R/B NRCA	E	26’-11”	FA2-304-01	NA	-	6
184	VRS-MEH-202B	B-Class 1E I&C Room In-Duct Heater	R/B NRCA	E	26’-11”	FA2-307-01	NA	-	6
185	VRS-MEH-202C	C-Class 1E I&C Room In-Duct Heater	R/B NRCA	W	26’-11”	FA2-312-01	NA	-	6
186	VRS-MEH-202D	D-Class 1E I&C Room In-Duct Heater	R/B NRCA	W	26’-11”	FA2-309-01	NA	-	6
187	VRS-MEH-203A	A-Class 1E Electrical Room MCR HVAC Equipment Room In-Duct Heater	R/B NRCA	E	50’-2”	FA2-402-01	above flood elevation	0.78	
188	VRS-MEH-203B	B-Class 1E Electrical Room MCR HVAC Equipment Room In-Duct Heater	R/B NRCA	E	50’-2”	FA2-401-01	above flood elevation	0.78	
189	VRS-MEH-203C	C-Class 1E Electrical Room MCR HVAC Equipment Room In-Duct Heater	R/B NRCA	W	50’-2”	FA2-403-01	above flood elevation	0.77	

Table 3K-3 R/B NRCA Components Protected From Internal Flooding (Sheet 13 of 27)

Item No.	Equipment Tag	Description	Location					Flood Elevation above Floor [ft]	Notes
			Building	Side	Floor Elevation	Fire Zone No.	Location Elevation above Floor		
190	VRS-MEH-203D	D-Class 1E Electrical Room MCR HVAC Equipment Room In-Duct Heater	R/B NRCA	W	50’-2”	FA2-404-01	above flood elevation	0.77	
191	VRS-MEH-211A	A-Remote Shutdown Console Room In-Duct Heater	R/B NRCA	E	76’-5”	FA2-504-01	NA	-	6
192	VRS-MEH-211B	B-Remote Shutdown Console Room In-Duct Heater	R/B NRCA	E	76’-5”	FA2-504-01	NA	-	6
193	VRS-EHD-201A	Electro Hydraulic Operated Damper	R/B NRCA	E	50'-2"	FA2-402-01	above flood elevation	0.78	
194	VRS-EHD-201B	Electro Hydraulic Operated Damper	R/B NRCA	E	50'-2"	FA2-401-01	above flood elevation	0.78	
195	VRS-EHD-201C	Electro Hydraulic Operated Damper	R/B NRCA	W	50'-2"	FA2-403-01	above flood elevation	0.77	
196	VRS-EHD-201D	Electro Hydraulic Operated Damper	R/B NRCA	W	50'-2"	FA2-404-01	above flood elevation	0.77	
197	VRS-EHD-202A	Electro Hydraulic Operated Damper	R/B NRCA	E	50'-2"	FA2-402-01	above flood elevation	0.78	
198	VRS-EHD-202B	Electro Hydraulic Operated Damper	R/B NRCA	E	50'-2"	FA2-401-01	above flood elevation	0.78	
199	VRS-EHD-202C	Electro Hydraulic Operated Damper	R/B NRCA	W	50'-2"	FA2-403-01	above flood elevation	0.77	
200	VRS-EHD-202D	Electro Hydraulic Operated Damper	R/B NRCA	W	50'-2"	FA2-404-01	above flood elevation	0.77	
201	VRS-EHD-203A	Electro Hydraulic Operated Damper	R/B NRCA	E	50'-2"	FA2-402-01	above flood elevation	0.78	
202	VRS-EHD-203B	Electro Hydraulic Operated Damper	R/B NRCA	E	50'-2"	FA2-401-01	above flood elevation	0.78	
203	VRS-EHD-203C	Electro Hydraulic Operated Damper	R/B NRCA	W	50'-2"	FA2-403-01	above flood elevation	0.77	

Table 3K-3 R/B NRCA Components Protected From Internal Flooding (Sheet 14 of 27)

Item No.	Equipment Tag	Description	Location					Flood Elevation above Floor [ft]	Notes
			Building	Side	Floor Elevation	Fire Zone No.	Location Elevation above Floor		
204	VRS-EHD-203D	Electro Hydraulic Operated Damper	R/B NRCA	W	50'-2"	FA2-404-01	above flood elevation	0.77	
205	VRS-EHD-204A	Electro Hydraulic Operated Damper	R/B NRCA	E	50'-2"	FA2-402-01	above flood elevation	0.78	
206	VRS-EHD-204B	Electro Hydraulic Operated Damper	R/B NRCA	E	50'-2"	FA2-401-01	above flood elevation	0.78	
207	VRS-EHD-204C	Electro Hydraulic Operated Damper	R/B NRCA	W	50'-2"	FA2-403-01	above flood elevation	0.77	
208	VRS-EHD-204D	Electro Hydraulic Operated Damper	R/B NRCA	W	50'-2"	FA2-404-01	above flood elevation	0.77	
209	VRS-AOD-205A	Air Operated Damper	R/B NRCA	E	50'-2"	FA2-402-01	above flood elevation	0.78	
210	VRS-AOD-205B	Air Operated Damper	R/B NRCA	E	50'-2"	FA2-401-01	above flood elevation	0.78	
211	VRS-AOD-205C	Air Operated Damper	R/B NRCA	W	50'-2"	FA2-403-01	above flood elevation	0.77	
212	VRS-AOD-205D	Air Operated Damper	R/B NRCA	W	50'-2"	FA2-404-01	above flood elevation	0.77	
213	VRS-MAH-401A	A-Emergency Feedwater Pump Area Air Handling Unit	R/B NRCA	E	-26'-4"	FA2-102-01	above flood elevation	0.42	
214	VRS-MAH-401B	B-Emergency Feedwater Pump Area Air Handling Unit	R/B NRCA	E	-26'-4"	FA2-103-01	above flood elevation	0.42	
215	VRS-MAH-401C	C-Emergency Feedwater Pump Area Air Handling Unit	R/B NRCA	W	-26'-4"	FA2-109-01	above flood elevation	0.43	
216	VRS-MAH-401D	D-Emergency Feedwater Pump Area Air Handling Unit	R/B NRCA	W	-26'-4"	FA2-108-01	above flood elevation	0.43	
217	VRS-MFN-401A	A-Emergency Feedwater Pump Area Air Handling Unit Fan	R/B NRCA	E	-26'-4"	FA2-102-01	above flood elevation	0.42	
218	VRS-MFN-401B	B-Emergency Feedwater Pump Area Air Handling Unit Fan	R/B NRCA	E	-26'-4"	FA2-103-01	above flood elevation	0.42	

Table 3K-3 R/B NRCA Components Protected From Internal Flooding (Sheet 15 of 27)

Item No.	Equipment Tag	Description	Location					Flood Elevation above Floor [ft]	Notes
			Building	Side	Floor Elevation	Fire Zone No.	Location Elevation above Floor		
219	VRS-MFN-401C	C-Emergency Feedwater Pump Area Air Handling Unit Fan	R/B NRCA	W	-26'-4"	FA2-109-01	above flood elevation	0.43	
220	VRS-MFN-401D	D-Emergency Feedwater Pump Area Air Handling Unit Fan	R/B NRCA	W	-26'-4"	FA2-108-01	above flood elevation	0.43	
221	VRS-MCL-401A	A-Emergency Feedwater Pump Area Air Handling Unit Cooling Coil	R/B NRCA	E	-26'-4"	FA2-102-01	above flood elevation	0.42	
222	VRS-MCL-401B	B-Emergency Feedwater Pump Area Air Handling Unit Cooling Coil	R/B NRCA	E	-26'-4"	FA2-103-01	above flood elevation	0.42	
223	VRS-MCL-401C	C-Emergency Feedwater Pump Area Air Handling Unit Cooling Coil	R/B NRCA	W	-26'-4"	FA2-109-01	above flood elevation	0.43	
224	VRS-MCL-401D	D-Emergency Feedwater Pump Area Air Handling Unit Cooling Coil	R/B NRCA	W	-26'-4"	FA2-108-01	above flood elevation	0.43	
225	VRS-MEH-401A	A-Emergency Feedwater Pump Area Air Handling Unit Electric Heating Coil	R/B NRCA	E	-26'-4"	FA2-102-01	above flood elevation	0.42	
226	VRS-MEH-401B	B-Emergency Feedwater Pump Area Air Handling Unit Electric Heating Coil	R/B NRCA	E	-26'-4"	FA2-103-01	above flood elevation	0.42	
227	VRS-MEH-401C	C-Emergency Feedwater Pump Area Air Handling Unit Electric Heating Coil	R/B NRCA	W	-26'-4"	FA2-109-01	above flood elevation	0.43	
228	VRS-MEH-401D	D-Emergency Feedwater Pump Area Air Handling Unit Electric Heating Coil	R/B NRCA	W	-26'-4"	FA2-108-01	above flood elevation	0.43	
229	VRS-MAH-501A	A-Component Cooling Water Pump Area Air Handling Unit	R/B NRCA	E	-26'-4"	FA2-104-01	above flood elevation	0.42	

Table 3K-3 R/B NRCA Components Protected From Internal Flooding (Sheet 16 of 27)

Item No.	Equipment Tag	Description	Location					Flood Elevation above Floor [ft]	Notes
			Building	Side	Floor Elevation	Fire Zone No.	Location Elevation above Floor		
230	VRS-MAH-501B	B-Component Cooling Water Pump Area Air Handling Unit	R/B NRCA	E	-26'-4"	FA2-105-01	above flood elevation	0.42	
231	VRS-MAH-501C	C-Component Cooling Water Pump Area Air Handling Unit	R/B NRCA	W	-26'-4"	FA2-106-01	above flood elevation	0.43	
232	VRS-MAH-501D	D-Component Cooling Water Pump Area Air Handling Unit	R/B NRCA	W	-26'-4"	FA2-107-01	above flood elevation	0.43	
233	VRS-MFN-501A	A-Component Cooling Water Pump Area Air Handling Unit Fan	R/B NRCA	E	-26'-4"	FA2-104-01	above flood elevation	0.42	
234	VRS-MFN-501B	B-Component Cooling Water Pump Area Air Handling Unit Fan	R/B NRCA	E	-26'-4"	FA2-105-01	above flood elevation	0.42	
235	VRS-MFN-501C	C-Component Cooling Water Pump Area Air Handling Unit Fan	R/B NRCA	W	-26'-4"	FA2-106-01	above flood elevation	0.43	
236	VRS-MFN-501D	D-Component Cooling Water Pump Area Air Handling Unit Fan	R/B NRCA	W	-26'-4"	FA2-107-01	above flood elevation	0.43	
237	VRS-MCL-501A	A-Component Cooling Water Pump Area Air Handling Unit Cooling Coil	R/B NRCA	E	-26'-4"	FA2-104-01	above flood elevation	0.42	
238	VRS-MCL-501B	B-Component Cooling Water Pump Area Air Handling Unit Cooling Coil	R/B NRCA	E	-26'-4"	FA2-105-01	above flood elevation	0.42	
239	VRS-MCL-501C	C-Component Cooling Water Pump Area Air Handling Unit Cooling Coil	R/B NRCA	W	-26'-4"	FA2-106-01	above flood elevation	0.43	
240	VRS-MCL-501D	D-Component Cooling Water Pump Area Air Handling Unit Cooling Coil	R/B NRCA	W	-26'-4"	FA2-107-01	above flood elevation	0.43	
241	VRS-MEH-501A	A-Component Cooling Water Pump Area Air Handling Unit Electric Heating Coil	R/B NRCA	E	-26'-4"	FA2-104-01	above flood elevation	0.42	

Table 3K-3 R/B NRCA Components Protected From Internal Flooding (Sheet 17 of 27)

Item No.	Equipment Tag	Description	Location					Flood Elevation above Floor [ft]	Notes
			Building	Side	Floor Elevation	Fire Zone No.	Location Elevation above Floor		
242	VRS-MEH-501B	B-Component Cooling Water Pump Area Air Handling Unit Electric Heating Coil	R/B NRCA	E	-26'-4"	FA2-105-01	above flood elevation	0.42	
243	VRS-MEH-501C	C-Component Cooling Water Pump Area Air Handling Unit Electric Heating Coil	R/B NRCA	W	-26'-4"	FA2-106-01	above flood elevation	0.43	
244	VRS-MEH-501D	D-Component Cooling Water Pump Area Air Handling Unit Electric Heating Coil	R/B NRCA	W	-26'-4"	FA2-107-01	above flood elevation	0.43	
245	VWS-TCV-141	Chilled Water Control Valve	R/B NRCA	E	50'-2"	FA2-402-01	above flood elevation	0.78	
246	VWS-TCV-151	Chilled Water Control Valve	R/B NRCA	E	50'-2"	FA2-401-01	above flood elevation	0.78	
247	VWS-TCV-161	Chilled Water Control Valve	R/B NRCA	W	50'-2"	FA2-403-01	above flood elevation	0.77	
248	VWS-TCV-171	Chilled Water Control Valve	R/B NRCA	W	50'-2"	FA2-404-01	above flood elevation	0.77	
249	VWS-TCV-206	Chilled Water Control Valve	R/B NRCA	E	50'-2"	FA2-402-01	above flood elevation	0.78	
250	VWS-TCV-226	Chilled Water Control Valve	R/B NRCA	E	50'-2"	FA2-401-01	above flood elevation	0.78	
251	VWS-TCV-246	Chilled Water Control Valve	R/B NRCA	W	50'-2"	FA2-403-01	above flood elevation	0.77	
252	VWS-TCV-266	Chilled Water Control Valve	R/B NRCA	W	50'-2"	FA2-404-01	above flood elevation	0.77	
253	VWS-TCV-402	Chilled Water Control Valve	R/B NRCA	E	-26'-4"	FA2-102-01	above flood elevation	0.42	
254	VWS-TCV-412	Chilled Water Control Valve	R/B NRCA	E	-26'-4"	FA2-103-01	above flood elevation	0.42	
255	VWS-TCV-422	Chilled Water Control Valve	R/B NRCA	W	-26'-4"	FA2-109-01	above flood elevation	0.43	
256	VWS-TCV-432	Chilled Water Control Valve	R/B NRCA	W	-26'-4"	FA2-108-01	above flood elevation	0.43	
257	VWS-TCV-502	Chilled Water Control Valve	R/B NRCA	E	-26'-4"	FA2-104-01	above flood elevation	0.42	
258	VWS-TCV-512	Chilled Water Control Valve	R/B NRCA	E	-26'-4"	FA2-105-01	above flood elevation	0.42	
259	VWS-TCV-522	Chilled Water Control Valve	R/B NRCA	W	-26'-4"	FA2-106-01	above flood elevation	0.43	
260	VWS-TCV-532	Chilled Water Control Valve	R/B NRCA	W	-26'-4"	FA2-107-01	above flood elevation	0.43	

Table 3K-3 R/B NRCA Components Protected From Internal Flooding (Sheet 18 of 27)

Item No.	Equipment Tag	Description	Location					Flood Elevation above Floor [ft]	Notes
			Building	Side	Floor Elevation	Fire Zone No.	Location Elevation above Floor		
261	OC	Operator Console	R/B NRCA	W	26'-11"	FA2-308-01	N/A	-	6
262	RPS-A	A-Reactor Protection System Cabinet	R/B NRCA	E	26'-11"	FA2-304-01	N/A	-	6
263	EFS-A	A-ESF Actuation System Cabinet	R/B NRCA	E	26'-11"	FA2-304-01	N/A	-	6
264	SVP-A	A-Safety VDU Processor Cabinet	R/B NRCA	E	26'-11"	FA2-304-01	N/A	-	6
265	SLS-A	A-Safety Logic System Cabinet	R/B NRCA	E	26'-11"	FA2-304-01	N/A	-	6
266	RPS-B	B-Reactor Protection System Cabinet	R/B NRCA	E	26'-11"	FA2-307-01	N/A	-	6
267	EFS-B	B-ESF Actuation System Cabinet	R/B NRCA	E	26'-11"	FA2-307-01	N/A	-	6
268	SVP-B	B-Safety VDU Processor Cabinet	R/B NRCA	E	26'-11"	FA2-307-01	N/A	-	6
269	SLS-B	B-Safety Logic System Cabinet	R/B NRCA	E	26'-11"	FA2-307-01	N/A	-	6
270	RPS-C	C-Reactor Protection System Cabinet	R/B NRCA	W	26'-11"	FA2-312-01	N/A	-	6
271	EFS-C	C-ESF Actuation System Cabinet	R/B NRCA	W	26'-11"	FA2-312-01	N/A	-	6
272	SVP-C	C-Safety VDU Processor Cabinet	R/B NRCA	W	26'-11"	FA2-312-01	N/A	-	6
273	SLS-C	C-Safety Logic System Cabinet	R/B NRCA	W	26'-11"	FA2-312-01	N/A	-	6
274	RPS-D	D-Reactor Protection System Cabinet	R/B NRCA	W	26'-11"	FA2-309-01	N/A	-	6
275	EFS-D	D-ESF Actuation System Cabinet	R/B NRCA	W	26'-11"	FA2-309-01	N/A	-	6
276	SVP-D	D-Safety VDU Processor Cabinet	R/B NRCA	W	26'-11"	FA2-309-01	N/A	-	6
277	SLS-D	D-Safety Logic System Cabinet	R/B NRCA	W	26'-11"	FA2-309-01	N/A	-	6
278	MC-A	A-Class 1E 6.9kV Switchgear	R/B NRCA	E	3'-7"	FA2-202-01	N/A	-	6
279	LC-A	A-Class 1E 480V Load Center	R/B NRCA	E	3'-7"	FA2-202-01	N/A	-	6
280	MCC-A	A-Class 1E Motor Control Center	R/B NRCA	E	3'-7"	FA2-202-01	N/A	-	6

Table 3K-3 R/B NRCA Components Protected From Internal Flooding (Sheet 19 of 27)

Item No.	Equipment Tag	Description	Location					Flood Elevation above Floor [ft]	Notes
			Building	Side	Floor Elevation	Fire Zone No.	Location Elevation above Floor		
281	MCC-A1	A1-Class 1E Motor Control Center	R/B NRCA	E	3'-7"	FA2-202-01	N/A	-	6
282	RIO-A	A-Safety Remote I/O Cabinet	R/B NRCA	E	26'-11"	FA2-304-01	N/A	-	6
283	PBH-A	A-Pressurizer Heater Distribution Panel	R/B NRCA	E	3'-7"	FA2-202-01	N/A	-	6
284	RPTS-A	A-RCP Trip Switchgear	R/B NRCA	E	3'-7"	FA2-203-01	N/A	-	6
285	MC-B	B-Class 1E 6.9kV Switchgear	R/B NRCA	E	3'-7"	FA2-203-01	N/A	-	6
286	LC-B	B-Class 1E 480V Load Center	R/B NRCA	E	3'-7"	FA2-203-01	N/A	-	6
287	MCC-B	B-Class 1E Motor Control Center	R/B NRCA	E	3'-7"	FA2-203-01	N/A	-	6
288	RIO-B	B-Safety Remote I/O Cabinet	R/B NRCA	E	26'-11"	FA2-307-01	N/A	-	6
289	PBH-B	B-Pressurizer Heater Distribution Panel	R/B NRCA	E	3'-7"	FA2-203-01	N/A	-	6
290	RPTS-B	B-RCP Trip Switchgear	R/B NRCA	E	3'-7"	FA2-203-01	N/A	-	6
291	MC-C	C-Class 1E 6.9kV Switchgear	R/B NRCA	W	3'-7"	FA2-204-01	N/A	-	6
292	LC-C	C-Class 1E 480V Load Center	R/B NRCA	W	3'-7"	FA2-204-01	N/A	-	6
293	MCC-C	C-Class 1E Motor Control Center	R/B NRCA	W	3'-7"	FA2-204-01	N/A	-	6
294	RIO-C	C-Safety Remote I/O Cabinet	R/B NRCA	W	26'-11"	FA2-312-01	N/A	-	6
295	PBH-C	C-Pressurizer Heater Distribution Panel	R/B NRCA	W	3'-7"	FA2-204-01	N/A	-	6
296	RPTS-C	C-RCP Trip Switchgear	R/B NRCA	W	3'-7"	FA2-204-01	N/A	-	6
297	MC-D	D-Class 1E 6.9kV Switchgear	R/B NRCA	W	3'-7"	FA2-205-01	N/A	-	6
298	LC-D	D-Class 1E 480V Load Center	R/B NRCA	W	3'-7"	FA2-205-01	N/A	-	6
299	MCC-D	D-Class 1E Motor Control Center	R/B NRCA	W	3'-7"	FA2-205-01	N/A	-	6
300	MCC-D1	D1-Class 1E Motor Control Center	R/B NRCA	W	3'-7"	FA2-205-01	N/A	-	6

Table 3K-3 R/B NRCA Components Protected From Internal Flooding (Sheet 20 of 27)

Item No.	Equipment Tag	Description	Location					Flood Elevation above Floor [ft]	Notes
			Building	Side	Floor Elevation	Fire Zone No.	Location Elevation above Floor		
301	RIO-D	D-Safety Remote I/O Cabinet	R/B NRCA	W	26'-11"	FA2-309-01	N/A	-	6
302	PBH-D	D-Pressurizer Heater Distribution Panel	R/B NRCA	W	3'-7"	FA2-205-01	N/A	-	6
303	RPTS-D	D-RCP Trip Switchgear	R/B NRCA	W	3'-7"	FA2-204-01	N/A	-	6
304	RSC	Remote Shutdown Console	R/B NRCA	E	76'-5"	FA2-504-01	N/A	-	6
305	MRTP-1	MCR/RSR Transfer Panel (1)	R/B NRCA	E	76'-5"	FA2-504-01	N/A	-	6
306	MRTP-2	MCR/RSR Transfer Panel (2)	R/B NRCA	W	76'-5"	FA2-509-01	above flood elevation	1.13	
307	RTBC-1	Reactor Trip Breaker Cabinet (1)	R/B NRCA	W	76'-5"	FA2-502-01	N/A	-	6
308	RTBC-2	Reactor Trip Breaker Cabinet (2)	R/B NRCA	W	76'-5"	FA2-503-01	N/A	-	6
309	DDP-A	A-Reactor Building DC Distribution Panel	R/B NRCA	E	3'-7"	FA2-202-01	N/A	-	6
310	SDC-A	A-Solenoid Distribution Panel	R/B NRCA	E	3'-7"	FA2-202-01	N/A	-	6
311	IBC-A	A-Class 1E UPS Unit	R/B NRCA	E	26'-11"	FA2-302-01	N/A	-	6
312	IBD-A	A-Class 1E AC120V Panelboard	R/B NRCA	E	3'-7"	FA2-202-01	N/A	-	6
313	DDP-B	B-Reactor Building DC Distribution Panel	R/B NRCA	E	3'-7"	FA2-203-01	N/A	-	6
314	SDC-B	B-Solenoid Distribution Panel	R/B NRCA	E	3'-7"	FA2-203-01	N/A	-	6
315	IBC-B	B-Class 1E UPS Unit	R/B NRCA	E	26'-11"	FA2-303-01	N/A	-	6
316	IBD-B	B-Class 1E AC120V Panelboard	R/B NRCA	E	3'-7"	FA2-203-01	N/A	-	6
317	DDP-C	C-Reactor Building DC Distribution Panel	R/B NRCA	W	3'-7"	FA2-204-01	N/A	-	6
318	SDC-C	C-Solenoid Distribution Panel	R/B NRCA	W	3'-7"	FA2-204-01	N/A	-	6
319	IBC-C	C-Class 1E UPS Unit	R/B NRCA	W	26'-11"	FA2-314-01	N/A	-	6
320	IBD-C	C-Class 1E AC120V Panelboard	R/B NRCA	W	3'-7"	FA2-204-01	N/A	-	6

Table 3K-3 R/B NRCA Components Protected From Internal Flooding (Sheet 21 of 27)

Item No.	Equipment Tag	Description	Location					Flood Elevation above Floor [ft]	Notes
			Building	Side	Floor Elevation	Fire Zone No.	Location Elevation above Floor		
321	DDP-D	D-Reactor Building DC Distribution Panel	R/B NRCA	W	3'-7"	FA2-205-01	N/A	-	6
322	SDC-D	D-Solenoid Distribution Panel	R/B NRCA	W	3'-7"	FA2-205-01	N/A	-	6
323	IBC-D	D-Class 1E UPS Unit	R/B NRCA	W	26'-11"	FA2-313-01	N/A	-	6
324	IBD-D	D-Class 1E AC120V Panelboard	R/B NRCA	W	3'-7"	FA2-205-01	N/A	-	6
325	EFS-FT-016	A - Emergency Feedwater Flow	R/B NRCA	E	-26'-4"	FA2-102-01	above flood elevation	0.42	
326	EFS-FT-026	B - Emergency Feedwater Flow	R/B NRCA	E	-26'-4"	FA2-103-01	above flood elevation	0.42	
327	EFS-FT-036	C - Emergency Feedwater Flow	R/B NRCA	W	-26'-4"	FA2-109-01	above flood elevation	0.43	
328	EFS-FT-046	D - Emergency Feedwater Flow	R/B NRCA	W	-26'-4"	FA2-108-01	above flood elevation	0.43	
329	EFS-LT-060	A - Emergency Feedwater Pit Water Level	R/B NRCA	E	76'-5"	FA2-507-01	above flood elevation	1.28	
330	EFS-LT-061	A - Emergency Feedwater Pit Water Level	R/B NRCA	E	76'-5"	FA2-507-01	above flood elevation	1.28	
331	EFS-LT-070	B - Emergency Feedwater Pit Water Level	R/B NRCA	W	76'-5"	FA2-509-01	above flood elevation	1.13	
332	EFS-LT-071	B - Emergency Feedwater Pit Water Level	R/B NRCA	W	76'-5"	FA2-509-01	above flood elevation	1.13	
333	EFS-PT-052	A - Emergency Feedwater Pump Discharge Pressure	R/B NRCA	E	-26'-4"	FA2-102-01	above flood elevation	0.42	
334	EFS-PT-050	B - Emergency Feedwater Pump Discharge Pressure	R/B NRCA	E	-26'-4"	FA2-103-01	above flood elevation	0.42	
335	EFS-PT-051	C - Emergency Feedwater Pump Discharge Pressure	R/B NRCA	W	-26'-4"	FA2-109-01	above flood elevation	0.43	
336	EFS-PT-053	D - Emergency Feedwater Pump Discharge Pressure	R/B NRCA	W	-26'-4"	FA2-108-01	above flood elevation	0.43	
337	MSS-PT-515	A - Main Steam Line Pressure	R/B NRCA	E	76'-5"	FA2-507-01	above flood elevation	1.28	

Table 3K-3 R/B NRCA Components Protected From Internal Flooding (Sheet 22 of 27)

Item No.	Equipment Tag	Description	Location					Flood Elevation above Floor [ft]	Notes
			Building	Side	Floor Elevation	Fire Zone No.	Location Elevation above Floor		
338	MSS-PT-516	A - Main Steam Line Pressure	R/B NRCA	E	76'-5"	FA2-507-01	above flood elevation	1.28	
339	MSS-PT-517	A - Main Steam Line Pressure	R/B NRCA	E	76'-5"	FA2-507-01	above flood elevation	1.28	
340	MSS-PT-518	A - Main Steam Line Pressure	R/B NRCA	E	76'-5"	FA2-507-01	above flood elevation	1.28	
341	MSS-PT-525	B - Main Steam Line Pressure	R/B NRCA	E	76'-5"	FA2-507-01	above flood elevation	1.28	
342	MSS-PT-526	B - Main Steam Line Pressure	R/B NRCA	E	76'-5"	FA2-507-01	above flood elevation	1.28	
343	MSS-PT-527	B - Main Steam Line Pressure	R/B NRCA	E	76'-5"	FA2-507-01	above flood elevation	1.28	
344	MSS-PT-528	B - Main Steam Line Pressure	R/B NRCA	E	76'-5"	FA2-507-01	above flood elevation	1.28	
345	MSS-PT-535	C - Main Steam Line Pressure	R/B NRCA	W	76'-5"	FA2-509-01	above flood elevation	1.13	
346	MSS-PT-536	C - Main Steam Line Pressure	R/B NRCA	W	76'-5"	FA2-509-01	above flood elevation	1.13	
347	MSS-PT-537	C - Main Steam Line Pressure	R/B NRCA	W	76'-5"	FA2-509-01	above flood elevation	1.13	
348	MSS-PT-538	C - Main Steam Line Pressure	R/B NRCA	W	76'-5"	FA2-509-01	above flood elevation	1.13	
349	MSS-PT-545	D - Main Steam Line Pressure	R/B NRCA	W	76'-5"	FA2-509-01	above flood elevation	1.13	
350	MSS-PT-546	D - Main Steam Line Pressure	R/B NRCA	W	76'-5"	FA2-509-01	above flood elevation	1.13	
351	MSS-PT-547	D - Main Steam Line Pressure	R/B NRCA	W	76'-5"	FA2-509-01	above flood elevation	1.13	
352	MSS-PT-548	D - Main Steam Line Pressure	R/B NRCA	W	76'-5"	FA2-509-01	above flood elevation	1.13	
353	NCS-FT-034	A -Component Cooling Water Header Flow	R/B NRCA	E	-26'-4"	FA2-104-01	above flood elevation	0.42	
354	NCS-FT-035	B -Component Cooling Water Header Flow	R/B NRCA	E	-26'-4"	FA2-105-01	above flood elevation	0.42	
355	NCS-FT-037	C -Component Cooling Water Header Flow	R/B NRCA	W	-26'-4"	FA2-106-01	above flood elevation	0.43	
356	NCS-FT-038	D -Component Cooling Water Header Flow	R/B NRCA	W	-26'-4"	FA2-107-01	above flood elevation	0.43	
357	NCS-LT-010A	A -Component Cooling Water Surge Tank Water Level	R/B NRCA	E	101'-0"	FA2-603-01	above flood elevation	1.52	

Table 3K-3 R/B NRCA Components Protected From Internal Flooding (Sheet 23 of 27)

Item No.	Equipment Tag	Description	Location					Flood Elevation above Floor [ft]	Notes
			Building	Side	Floor Elevation	Fire Zone No.	Location Elevation above Floor		
358	NCS-LT-010B	A -Component Cooling Water Surge Tank Water Level	R/B NRCA	E	101'-0"	FA2-601-01	above flood elevation	1.52	
359	NCS-LT-010C	B -Component Cooling Water Surge Tank Water Level	R/B NRCA	W	101'-0"	FA2-602-01	above flood elevation	3.09	
360	NCS-LT-010D	B -Component Cooling Water Surge Tank Water Level	R/B NRCA	W	101'-0"	FA2-604-01	above flood elevation	3.09	
361	NCS-PT-030	A -Component Cooling Water Header Pressure	R/B NRCA	E	-26'-4"	FA2-104-01	above flood elevation	0.42	
362	NCS-PT-031	B -Component Cooling Water Header Pressure	R/B NRCA	E	-26'-4"	FA2-105-01	above flood elevation	0.42	
363	NCS-PT-032	C -Component Cooling Water Header Pressure	R/B NRCA	W	-26'-4"	FA2-106-01	above flood elevation	0.43	
364	NCS-PT-033	D -Component Cooling Water Header Pressure	R/B NRCA	W	-26'-4"	FA2-107-01	above flood elevation	0.43	
365	EWS-FT-034	A - Component Cooling Water Heat Exchanger Essential Service Water Flow	R/B NRCA	E	-26'-4"	FA2-104-01	above flood elevation	0.42	
366	EWS-FT-035	B - Component Cooling Water Heat Exchanger Essential Service Water Flow	R/B NRCA	E	-26'-4"	FA2-105-01	above flood elevation	0.42	
367	EWS-FT-036	C - Component Cooling Water Heat Exchanger Essential Service Water Flow	R/B NRCA	W	-26'-4"	FA2-106-01	above flood elevation	0.43	
368	EWS-FT-037	D - Component Cooling Water Heat Exchanger Essential Service Water Flow	R/B NRCA	W	-26'-4"	FA2-107-01	above flood elevation	0.43	
369	NCS-TE-025	A -Component Cooling Water Supply Temperature	R/B NRCA	E	-26'-4"	FA2-104-01	above flood elevation	0.42	

Table 3K-3 R/B NRCA Components Protected From Internal Flooding (Sheet 24 of 27)

Item No.	Equipment Tag	Description	Location					Flood Elevation above Floor [ft]	Notes
			Building	Side	Floor Elevation	Fire Zone No.	Location Elevation above Floor		
370	NCS-TE-026	B -Component Cooling Water Supply Temperature	R/B NRCA	E	-26'-4"	FA2-105-01	above flood elevation	0.42	
371	NCS-TE-027	C -Component Cooling Water Supply Temperature	R/B NRCA	W	-26'-4"	FA2-106-01	above flood elevation	0.43	
372	NCS-TE-028	D -Component Cooling Water Supply Temperature	R/B NRCA	W	-26'-4"	FA2-107-01	above flood elevation	0.43	
373	RMS-RE-83A	Main Control Room Outside Air Intake Particulate Radiation	R/B NRCA	E	50'-2"	FA2-420-02	above flood elevation	0.78	
374	RMS-RE-83B	Main Control Room Outside Air Intake Particulate Radiation	R/B NRCA	W	50'-2"	FA2-407-03	above flood elevation	0.77	
375	RMS-RE-84A	Main Control Room Outside Air Intake Gas Radiation	R/B NRCA	E	50'-2"	FA2-420-02	above flood elevation	0.78	
376	RMS-RE-84B	Main Control Room Outside Air Intake Gas Radiation	R/B NRCA	W	50'-2"	FA2-407-03	above flood elevation	0.77	
377	RMS-RE-85A	Main Control Room Outside Air Intake Iodine Radiation	R/B NRCA	E	50'-2"	FA2-420-02	above flood elevation	0.78	
378	RMS-RE-85B	Main Control Room Outside Air Intake Iodine Radiation	R/B NRCA	W	50'-2"	FA2-407-03	above flood elevation	0.77	
379	VRS-TS-401	A - Emergency Feedwater Pump Area Temperature	R/B NRCA	E	-26'-4"	FA2-102-01	above flood elevation	0.42	
380	VRS-TS-405	A - Emergency Feedwater Pump Area Temperature	R/B NRCA	E	-26'-4"	FA2-102-01	above flood elevation	0.42	
381	VRS-TS-406	A - Emergency Feedwater Pump Area Temperature	R/B NRCA	E	-26'-4"	FA2-102-01	above flood elevation	0.42	
382	VRS-TS-411	B - Emergency Feedwater Pump Area Temperature	R/B NRCA	E	-26'-4"	FA2-103-01	above flood elevation	0.42	
383	VRS-TS-415	B - Emergency Feedwater Pump Area Temperature	R/B NRCA	E	-26'-4"	FA2-103-01	above flood elevation	0.42	

Table 3K-3 R/B NRCA Components Protected From Internal Flooding (Sheet 25 of 27)

Item No.	Equipment Tag	Description	Location					Flood Elevation above Floor [ft]	Notes
			Building	Side	Floor Elevation	Fire Zone No.	Location Elevation above Floor		
384	VRS-TS-416	B - Emergency Feedwater Pump Area Temperature	R/B NRCA	E	-26'-4"	FA2-103-01	above flood elevation	0.42	
385	VRS-TS-421	C - Emergency Feedwater Pump Area Temperature	R/B NRCA	W	-26'-4"	FA2-109-01	above flood elevation	0.43	
386	VRS-TS-425	C - Emergency Feedwater Pump Area Temperature	R/B NRCA	W	-26'-4"	FA2-109-01	above flood elevation	0.43	
387	VRS-TS-426	C - Emergency Feedwater Pump Area Temperature	R/B NRCA	W	-26'-4"	FA2-109-01	above flood elevation	0.43	
388	VRS-TS-431	D - Emergency Feedwater Pump Area Temperature	R/B NRCA	W	-26'-4"	FA2-108-01	above flood elevation	0.43	
389	VRS-TS-435	D - Emergency Feedwater Pump Area Temperature	R/B NRCA	W	-26'-4"	FA2-108-01	above flood elevation	0.43	
390	VRS-TS-436	D - Emergency Feedwater Pump Area Temperature	R/B NRCA	W	-26'-4"	FA2-108-01	above flood elevation	0.43	
391	VRS-TS-501	A -Component Cooling Water Pump Area Temperature	R/B NRCA	E	-26'-4"	FA2-104-01	above flood elevation	0.42	
392	VRS-TS-504	A -Component Cooling Water Pump Area Temperature	R/B NRCA	E	-26'-4"	FA2-104-01	above flood elevation	0.42	
393	VRS-TS-505	A -Component Cooling Water Pump Area Temperature	R/B NRCA	E	-26'-4"	FA2-104-01	above flood elevation	0.42	
394	VRS-TS-511	B -Component Cooling Water Pump Area Temperature	R/B NRCA	E	-26'-4"	FA2-105-01	above flood elevation	0.42	
395	VRS-TS-514	B -Component Cooling Water Pump Area Temperature	R/B NRCA	E	-26'-4"	FA2-105-01	above flood elevation	0.42	
396	VRS-TS-515	B -Component Cooling Water Pump Area Temperature	R/B NRCA	E	-26'-4"	FA2-105-01	above flood elevation	0.42	
397	VRS-TS-521	C -Component Cooling Water Pump Area Temperature	R/B NRCA	W	-26'-4"	FA2-106-01	above flood elevation	0.43	

Table 3K-3 R/B NRCA Components Protected From Internal Flooding (Sheet 26 of 27)

Item No.	Equipment Tag	Description	Location					Flood Elevation above Floor [ft]	Notes
			Building	Side	Floor Elevation	Fire Zone No.	Location Elevation above Floor		
398	VRS-TS-524	C -Component Cooling Water Pump Area Temperature	R/B NRCA	W	-26'-4"	FA2-106-01	above flood elevation	0.43	
399	VRS-TS-525	C -Component Cooling Water Pump Area Temperature	R/B NRCA	W	-26'-4"	FA2-106-01	above flood elevation	0.43	
400	VRS-TS-531	D -Component Cooling Water Pump Area Temperature	R/B NRCA	W	-26'-4"	FA2-107-01	above flood elevation	0.43	
401	VRS-TS-534	D -Component Cooling Water Pump Area Temperature	R/B NRCA	W	-26'-4"	FA2-107-01	above flood elevation	0.43	
402	VRS-TS-535	D -Component Cooling Water Pump Area Temperature	R/B NRCA	W	-26'-4"	FA2-107-01	above flood elevation	0.43	
403	VRS-TS-210	A -Class 1E Electrical Room Temperature	R/B NRCA	E	3'-7"	FA2-202-01	N/A	-	6
404	VRS-TS-230	B -Class 1E Electrical Room Temperature	R/B NRCA	E	3'-7"	FA2-203-01	N/A	-	6
405	VRS-TS-250	C -Class 1E Electrical Room Temperature	R/B NRCA	W	3'-7"	FA2-204-01	N/A	-	6
406	VRS-TS-270	D -Class 1E Electrical Room Temperature	R/B NRCA	W	3'-7"	FA2-205-01	N/A	-	6
407	VRS-TS-146	Main Control Room Temperature	R/B NRCA	W	26'-11"	FA2-308-01	N/A	-	6
408	VRS-TS-156	Main Control Room Temperature	R/B NRCA	W	26'-11"	FA2-308-01	N/A	-	6
409	VRS-TS-166	Main Control Room Temperature	R/B NRCA	W	26'-11"	FA2-308-01	N/A	-	6
410	VRS-TS-176	Main Control Room Temperature	R/B NRCA	W	26'-11"	FA2-308-01	N/A	-	6
411	NCS-LCV-010B	Level Control Valve	R/B NRCA	E	101’-0”	FA2-601-01	above flood elevation	1.52	
412	NCS-LCV-010D	Level Control Valve	R/B NRCA	W	101’-0”	FA2-604-01	above flood elevation	3.09	7
413	NCS-LT-011A	A - Component Cooling Water Surge Tank Water Level	R/B NRCA	E	101’-0”	FA2-603-01	above flood elevation	1.52	

Table 3K-3 R/B NRCA Components Protected From Internal Flooding (Sheet 27 of 27)

Item No.	Equipment Tag	Description	Location					Flood Elevation above Floor [ft]	Notes
			Building	Side	Floor Elevation	Fire Zone No.	Location Elevation above Floor		
414	NCS-LT-011B	A - Component Cooling Water Surge Tank Water Level	R/B NRCA	E	101’-0”	FA2-601-01	above flood elevation	1.52	
415	NCS-LT-011C	B - Component Cooling Water Surge Tank Water Level	R/B NRCA	W	101’-0”	FA2-602-01	above flood elevation	3.09	
416	NCS-LT-011D	B - Component Cooling Water Surge Tank Water Level	R/B NRCA	W	101’-0”	FA2-604-01	above flood elevation	3.09	
417	NCS-PT-025	A - Component Cooling Water Pump Discharge Pressure	R/B NRCA	E	-26'-4"	FA2-104-01	above flood elevation	0.42	
418	NCS-PT-026	B - Component Cooling Water Pump Discharge Pressure	R/B NRCA	E	-26'-4"	FA2-105-01	above flood elevation	0.42	
419	NCS-PT-027	C - Component Cooling Water Pump Discharge Pressure	R/B NRCA	W	-26'-4"	FA2-106-01	above flood elevation	0.43	
420	NCS-PT-028	D - Component Cooling Water Pump Discharge Pressure	R/B NRCA	W	-26'-4"	FA2-107-01	above flood elevation	0.43	
421	NCS-PT-035	A - Component Cooling Water Pump Discharge Pressure	R/B NRCA	E	-26'-4"	FA2-104-01	above flood elevation	0.42	
422	NCS-PT-036	B - Component Cooling Water Pump Discharge Pressure	R/B NRCA	E	-26'-4"	FA2-105-01	above flood elevation	0.42	
423	NCS-PT-037	C - Component Cooling Water Pump Discharge Pressure	R/B NRCA	W	-26'-4"	FA2-106-01	above flood elevation	0.43	
424	NCS-PT-038	D - Component Cooling Water Pump Discharge Pressure	R/B NRCA	W	-26'-4"	FA2-107-01	above flood elevation	0.43	

Notes:

1. These components are protected by water-tight door and floor drain isolation valve against in-flow of flooding occurring outside of compartment. In addition, these components are not required to be protected against flooding occurring inside the compartment due to redundancy of other trains/components.
2. There is no impact to this component, even if outside of pit is flooded.

3. Main feed water valves are submerged in the event of main feed water pipe rupture. However, the function of these valves are not required for the mitigation of a main feed water rupture event. Main feed water valves are required for containment isolation function in the event of LOCA. In the event of LOCA, a huge volume of water is released. However, this flooding only occurs inside containment. Therefore, these valves are not submerged in the event of LOCA.
4. Support leg of A-CCW surge tank is flooded, but there is no impact to function of this component.
5. Lower portion of B-CCW surge tank is flooded, but there is no impact to function of this component.
6. These components are protected by water-tight door or barriers against in-flow of flooding occurring outside of compartment.
7. These valves are closed when in the normal condition. If this valve opens due to the event of flooding, the water is continuously supplied to CCW surge tank. Then, the surge tank may fail. However, the other valve “NCS-RCV-056B” will open on a high pressure alarm. Since the valve “NCS-RCV-056B” is not submerged in the event of flooding, the CCW surge tank maintains its function.

Table 3K-4 PS/B Components Protected From Internal Flooding (Sheet 1 of 9)

Item No.	Equipment Tag	Description	Location					Flood Elevation above Floor [ft]	Notes
			Building	Side	Floor Elevation	Fire Zone No.	Location Elevation above Floor		
1	VRS-MFN-251A	A-Class 1E Battery Room Exhaust Fan	PS/B	E	3'-7"	FA3-104-04	N/A	-	1
2	VRS-MFN-251B	B-Class 1E Battery Room Exhaust Fan	PS/B	E	3'-7"	FA3-103-04	N/A	-	1
3	VRS-MFN-251C	C-Class 1E Battery Room Exhaust Fan	PS/B	W	3'-7"	FA3-109-03	N/A	-	1
4	VRS-MFN-251D	D-Class 1E Battery Room Exhaust Fan	PS/B	W	3'-7"	FA3-111-03	N/A	-	1
5	VRS-EHD-251A	Electro Hydraulic Operated Damper	PS/B	E	3'-7"	FA3-104-04	N/A	-	1
6	VRS-EHD-251B	Electro Hydraulic Operated Damper	PS/B	E	3'-7"	FA3-103-04	N/A	-	1
7	VRS-EHD-251C	Electro Hydraulic Operated Damper	PS/B	W	3'-7"	FA3-109-03	N/A	-	1
8	VRS-EHD-251D	Electro Hydraulic Operated Damper	PS/B	W	3'-7"	FA3-111-03	N/A	-	1
9	VRS-EHD-252A	Electro Hydraulic Operated Damper	PS/B	E	3'-7"	FA3-104-04	N/A	-	1
10	VRS-EHD-252B	Electro Hydraulic Operated Damper	PS/B	E	3'-7"	FA3-103-04	N/A	-	1
11	VRS-EHD-252C	Electro Hydraulic Operated Damper	PS/B	W	3'-7"	FA3-109-03	N/A	-	1
12	VRS-EHD-252D	Electro Hydraulic Operated Damper	PS/B	W	3'-7"	FA3-111-03	N/A	-	1
13	VRS-MAH-511A	A-Essential Chiller Unit Area Air Handling Unit	PS/B	E	-26'-4"	FA3-101-01	above flood elevation	0.42	2
14	VRS-MAH-511B	B-Essential Chiller Unit Area Air Handling Unit	PS/B	E	-26'-4"	FA3-102-01	above flood elevation	0.42	2
15	VRS-MAH-511C	C-Essential Chiller Unit Area Air Handling Unit	PS/B	W	-26'-4"	FA3-108-01	above flood elevation	0.43	2

Table 3K-4 PS/B Components Protected From Internal Flooding (Sheet 2 of 9)

Item No.	Equipment Tag	Description	Location					Flood Elevation above Floor [ft]	Notes
			Building	Side	Floor Elevation	Fire Zone No.	Location Elevation above Floor		
16	VRS-MAH-511D	D-Essential Chiller Unit Area Air Handling Unit	PS/B	W	-26'-4"	FA3-110-01	above flood elevation	0.43	2
17	VRS-MFN-511A	A-Essential Chiller Unit Area Air Handling Unit Fan	PS/B	E	-26'-4"	FA3-101-01	above flood elevation	0.42	2
18	VRS-MFN-511B	B-Essential Chiller Unit Area Air Handling Unit Fan	PS/B	E	-26'-4"	FA3-102-01	above flood elevation	0.42	2
19	VRS-MFN-511C	C-Essential Chiller Unit Area Air Handling Unit Fan	PS/B	W	-26'-4"	FA3-108-01	above flood elevation	0.43	2
20	VRS-MFN-511D	D-Essential Chiller Unit Area Air Handling Unit Fan	PS/B	W	-26'-4"	FA3-110-01	above flood elevation	0.43	2
21	VRS-MCL-511A	A-Essential Chiller Unit Area Air Handling Unit Cooling Coil	PS/B	E	-26'-4"	FA3-101-01	above flood elevation	0.42	2
22	VRS-MCL-511B	B-Essential Chiller Unit Area Air Handling Unit Cooling Coil	PS/B	E	-26'-4"	FA3-102-01	above flood elevation	0.42	2
23	VRS-MCL-511C	C-Essential Chiller Unit Area Air Handling Unit Cooling Coil	PS/B	W	-26'-4"	FA3-108-01	above flood elevation	0.43	2
24	VRS-MCL-511D	D-Essential Chiller Unit Area Air Handling Unit Cooling Coil	PS/B	W	-26'-4"	FA3-110-01	above flood elevation	0.43	2
25	VRS-MEH-511A	A-Essential Chiller Unit Area Air Handling Unit Electric Heating Coil	PS/B	E	-26'-4"	FA3-101-01	above flood elevation	0.42	2
26	VRS-MEH-511B	B-Essential Chiller Unit Area Air Handling Unit Electric Heating Coil	PS/B	E	-26'-4"	FA3-102-01	above flood elevation	0.42	2
27	VRS-MEH-511C	C-Essential Chiller Unit Area Air Handling Unit Electric Heating Coil	PS/B	W	-26'-4"	FA3-108-01	above flood elevation	0.43	2
28	VRS-MEH-511D	D-Essential Chiller Unit Area Air Handling Unit Electric Heating Coil	PS/B	W	-26'-4"	FA3-110-01	above flood elevation	0.43	2

Table 3K-4 PS/B Components Protected From Internal Flooding (Sheet 3 of 9)

Item No.	Equipment Tag	Description	Location					Flood Elevation above Floor [ft]	Notes
			Building	Side	Floor Elevation	Fire Zone No.	Location Elevation above Floor		
29	VWS-MEQ-001A	A-Essential Chiller Unit	PS/B	E	-26'-4"	FA3-101-01	above flood elevation	0.42	2
30	VWS-MEQ-001B	B-Essential Chiller Unit	PS/B	E	-26'-4"	FA3-102-01	above flood elevation	0.42	2
31	VWS-MEQ-001C	C-Essential Chiller Unit	PS/B	W	-26'-4"	FA3-108-01	above flood elevation	0.43	2
32	VWS-MEQ-001D	D-Essential Chiller Unit	PS/B	W	-26'-4"	FA3-110-01	above flood elevation	0.43	2
33	VWS-MPP-001A	A-Essential Chilled Water Pump	PS/B	E	-26'-4"	FA3-101-01	above flood elevation	0.42	2
34	VWS-MPP-001B	B-Essential Chilled Water Pump	PS/B	E	-26'-4"	FA3-102-01	above flood elevation	0.42	2
35	VWS-MPP-001C	C-Essential Chilled Water Pump	PS/B	W	-26'-4"	FA3-108-01	above flood elevation	0.43	2
36	VWS-MPP-001D	D-Essential Chilled Water Pump	PS/B	W	-26'-4"	FA3-110-01	above flood elevation	0.43	2
37	VWS-MTK-001A	A-Essential Chilled Water Compression Tank	PS/B	E	-26'-4"	FA3-101-01	above flood elevation	0.42	2
38	VWS-MTK-001B	B-Essential Chilled Water Compression Tank	PS/B	E	-26'-4"	FA3-102-01	above flood elevation	0.42	2
39	VWS-MTK-001C	C-Essential Chilled Water Compression Tank	PS/B	W	-26'-4"	FA3-108-01	above flood elevation	0.43	2
40	VWS-MTK-001D	D-Essential Chilled Water Compression Tank	PS/B	W	-26'-4"	FA3-110-01	above flood elevation	0.43	2
41	VWS-TCV-542	Chilled Water Control Valve	PS/B	E	-26'-4"	FA3-101-01	above flood elevation	0.42	2
42	VWS-TCV-552	Chilled Water Control Valve	PS/B	E	-26'-4"	FA3-102-01	above flood elevation	0.42	2

Table 3K-4 PS/B Components Protected From Internal Flooding (Sheet 4 of 9)

Item No.	Equipment Tag	Description	Location					Flood Elevation above Floor [ft]	Notes
			Building	Side	Floor Elevation	Fire Zone No.	Location Elevation above Floor		
43	VWS-TCV-562	Chilled Water Control Valve	PS/B	W	-26'-4"	FA3-108-01	above flood elevation	0.43	2
44	VWS-TCV-572	Chilled Water Control Valve	PS/B	W	-26'-4"	FA3-110-01	above flood elevation	0.43	2
45	VWS-SRV-253A	Safety Valve	PS/B	E	-26'-4"	FA3-101-01	above flood elevation	0.42	2
46	VWS-SRV-253B	Safety Valve	PS/B	E	-26'-4"	FA3-102-01	above flood elevation	0.42	2
47	VWS-SRV-253C	Safety Valve	PS/B	W	-26'-4"	FA3-108-01	above flood elevation	0.43	2
48	VWS-SRV-253D	Safety Valve	PS/B	W	-26'-4"	FA3-110-01	above flood elevation	0.43	2
49	A-EGTG	A-Class 1E Gas Turbine Generator	PS/B	E	3'-7"	FA3-104-03	N/A	-	1
50	B-EGTG	B-Class 1E Gas Turbine Generator	PS/B	E	3'-7"	FA3-103-03	N/A	-	1
51	C-EGTG	C-Class 1E Gas Turbine Generator	PS/B	W	3'-7"	FA3-109-03	N/A	-	1
52	D-EGTG	D-Class 1E Gas Turbine Generator	PS/B	W	3'-7"	FA3-111-03	N/A	-	1
53	BCP-A	A-Class 1E Battery Charger	PS/B	E	-14'-2"	FA3-117-01	N/A	-	1
54	DCC-A	A-Class 1E DC Switchboard	PS/B	E	-14'-2"	FA3-117-01	N/A	-	1
55	DCC-A1	A1-Class 1E DC Switchboard	PS/B	E	-14'-2"	FA3-117-01	N/A	-	1
56	BCP-B	B-Class 1E Battery Charger	PS/B	E	-14'-2"	FA3-118-01	N/A	-	1
57	DCC-B	B-Class 1E DC Switchboard	PS/B	E	-14'-2"	FA3-118-01	N/A	-	1
58	BCP-C	C-Class 1E Battery Charger	PS/B	W	-14'-2"	FA3-122-01	N/A	-	1
59	DCC-C	C-Class 1E DC Switchboard	PS/B	W	-14'-2"	FA3-122-01	N/A	-	1
60	BCP-D	D-Class 1E Battery Charger	PS/B	W	-14'-2"	FA3-123-01	N/A	-	1
61	DCC-D	D-Class 1E DC Switchboard	PS/B	W	-14'-2"	FA3-123-01	N/A	-	1
62	DCC-D1	D1-Class 1E DC Switchboard	PS/B	W	-14'-2"	FA3-123-01	N/A	-	1
63	VCC-A	A-Ventilation Chiller Control Cabinet	PS/B	E	-26'-4"	FA3-101-01	above flood elevation	0.42	2

Table 3K-4 PS/B Components Protected From Internal Flooding (Sheet 5 of 9)

Item No.	Equipment Tag	Description	Location					Flood Elevation above Floor [ft]	Notes
			Building	Side	Floor Elevation	Fire Zone No.	Location Elevation above Floor		
64	VCC-B	B-Ventilation Chiller Control Cabinet	PS/B	E	-26'-4"	FA3-102-01	above flood elevation	0.42	2
65	VCC-C	C-Ventilation Chiller Control Cabinet	PS/B	W	-26'-4"	FA3-108-01	above flood elevation	0.43	2
66	VCC-D	D-Ventilation Chiller Control Cabinet	PS/B	W	-26'-4"	FA3-110-01	above flood elevation	0.43	2
67	BAT-A	A-Class 1E Battery	PS/B	E	-26'-4"	FA3-115-01	above flood elevation	0.42	2
68	BAT-B	B-Class 1E Battery	PS/B	E	-26'-4"	FA3-116-01	above flood elevation	0.42	2
69	BAT-C	C-Class 1E Battery	PS/B	W	-26'-4"	FA3-120-01	above flood elevation	0.43	2
70	BAT-D	D-Class 1E Battery	PS/B	W	-26'-4"	FA3-121-01	above flood elevation	0.43	2
71	EPBA	A-Class 1E Gas Turbine Generator Control Board	PS/B	E	3'-7"	FA3-104-04	N/A	-	1
72	EPBB	B-Class 1E Gas Turbine Generator Control Board	PS/B	E	3'-7"	FA3-103-04	N/A	-	1
73	EPBC	C-Class 1E Gas Turbine Generator Control Board	PS/B	W	3'-7"	FA3-109-03	N/A	-	1
74	EPBD	D-Class 1E Gas Turbine Generator Control Board	PS/B	W	3'-7"	FA3-111-03	N/A	-	1
75	VRS-TS-541	A - Essential Chiller Unit Area Temperature	PS/B	E	-26'-4"	FA3-101-01	above flood elevation	0.42	2
76	VRS-TS-544	A - Essential Chiller Unit Area Temperature	PS/B	E	-26'-4"	FA3-101-01	above flood elevation	0.42	2
77	VRS-TS-545	A - Essential Chiller Unit Area Temperature	PS/B	E	-26'-4"	FA3-101-01	above flood elevation	0.42	2
78	VRS-TS-551	B - Essential Chiller Unit Area Temperature	PS/B	E	-26'-4"	FA3-102-01	above flood elevation	0.42	2

Table 3K-4 PS/B Components Protected From Internal Flooding (Sheet 6 of 9)

Item No.	Equipment Tag	Description	Location					Flood Elevation above Floor [ft]	Notes
			Building	Side	Floor Elevation	Fire Zone No.	Location Elevation above Floor		
79	VRS-TS-554	B - Essential Chiller Unit Area Temperature	PS/B	E	-26'-4"	FA3-102-01	above flood elevation	0.42	2
80	VRS-TS-555	B - Essential Chiller Unit Area Temperature	PS/B	E	-26'-4"	FA3-102-01	above flood elevation	0.42	2
81	VRS-TS-561	C - Essential Chiller Unit Area Temperature	PS/B	W	-26'-4"	FA3-108-01	above flood elevation	0.43	2
82	VRS-TS-564	C - Essential Chiller Unit Area Temperature	PS/B	W	-26'-4"	FA3-108-01	above flood elevation	0.43	2
83	VRS-TS-565	C - Essential Chiller Unit Area Temperature	PS/B	W	-26'-4"	FA3-108-01	above flood elevation	0.43	2
84	VRS-TS-571	D - Essential Chiller Unit Area Temperature	PS/B	W	-26'-4"	FA3-110-01	above flood elevation	0.43	2
85	VRS-TS-574	D - Essential Chiller Unit Area Temperature	PS/B	W	-26'-4"	FA3-110-01	above flood elevation	0.43	2
86	VRS-TS-575	D - Essential Chiller Unit Area Temperature	PS/B	W	-26'-4"	FA3-110-01	above flood elevation	0.43	2
87	VRS-MEH-204A	A-Class 1E Battery Room In-Duct Heater	PS/B	E	-26'-4"	FA3-115-01	above flood elevation	0.42	2
88	VRS-MEH-204B	B-Class 1E Battery Room In-Duct Heater	PS/B	E	-26'-4"	FA3-116-01	above flood elevation	0.42	2
89	VRS-MEH-204C	C-Class 1E Battery Room In-Duct Heater	PS/B	W	-26'-4"	FA3-120-01	above flood elevation	0.43	2
90	VRS-MEH-204D	D-Class 1E Battery Room In-Duct Heater	PS/B	W	-26'-4"	FA3-121-01	above flood elevation	0.43	2
91	MVIA1	A-MOV Inverter1	PS/B	E	-26'-4"	FA3-132-01	above flood elevation	0.42	2
92	MVIA2	A-MOV Inverter2	PS/B	E	-26'-4"	FA3-132-01	above flood elevation	0.42	2

Table 3K-4 PS/B Components Protected From Internal Flooding (Sheet 7 of 9)

Item No.	Equipment Tag	Description	Location					Flood Elevation above Floor [ft]	Notes
			Building	Side	Floor Elevation	Fire Zone No.	Location Elevation above Floor		
93	MVCA1	A-MOV Motor Control Center1	PS/B	E	-26'-4"	FA3-132-01	above flood elevation	0.42	2
94	MVCA2	A-MOV Motor Control Center1	PS/B	E	-26'-4"	FA3-132-01	above flood elevation	0.42	2
95	MVIB	B-MOV Inverter	PS/B	E	-26'-4"	FA3-133-01	above flood elevation	0.42	2
96	MVCB	B-MOV Motor Control Center	PS/B	E	-26'-4"	FA3-133-01	above flood elevation	0.42	2
97	MVIC	C-MOV Inverter	PS/B	W	-26'-4"	FA3-134-01	above flood elevation	0.43	2
98	MVCC	C-MOV Motor Control Center	PS/B	W	-26'-4"	FA3-134-01	above flood elevation	0.43	2
99	MVID1	D-MOV Inverter1	PS/B	W	-26'-4"	FA3-135-01	above flood elevation	0.43	2
100	MVID2	D-MOV Inverter2	PS/B	W	-26'-4"	FA3-135-01	above flood elevation	0.43	2
101	MVCD1	D-MOV Motor Control Center1	PS/B	W	-26'-4"	FA3-135-01	above flood elevation	0.43	2
102	MVCD2	D-MOV Motor Control Center2	PS/B	W	-26'-4"	FA3-135-01	above flood elevation	0.43	2
103	GTS-MFN-201A	A-Emergency Gas Turbine Lubrication System Oil Cooler Fan	PS/B	E	3’-7”	FA3-104-03	N/A	-	1
104	GTS-MFN-202A	A-Emergency Gas Turbine Lubrication System Oil Cooler Fan	PS/B	E	3’-7”	FA3-104-03	N/A	-	1
105	GTS-MFN-201B	B-Emergency Gas Turbine Lubrication System Oil Cooler Fan	PS/B	E	3’-7”	FA3-103-03	N/A	-	1
106	GTS-MFN-202B	B-Emergency Gas Turbine Lubrication System Oil Cooler Fan	PS/B	E	3’-7”	FA3-103-03	N/A	-	1
107	GTS-MFN-201C	C-Emergency Gas Turbine Lubrication System Oil Cooler Fan	PS/B	W	3’-7”	FA3-109-03	N/A	-	1
108	GTS-MFN-202C	C-Emergency Gas Turbine Lubrication System Oil Cooler Fan	PS/B	W	3’-7”	FA3-109-03	N/A	-	1
109	GTS-MFN-201D	D-Emergency Gas Turbine Lubrication System Oil Cooler Fan	PS/B	W	3’-7”	FA3-111-03	N/A	-	1

Table 3K-4 PS/B Components Protected From Internal Flooding (Sheet 8 of 9)

Item No.	Equipment Tag	Description	Location					Flood Elevation above Floor [ft]	Notes
			Building	Side	Floor Elevation	Fire Zone No.	Location Elevation above Floor		
110	GTS-MFN-202D	D-Emergency Gas Turbine Lubrication System Oil Cooler Fan	PS/B	W	3’-7”	FA3-111-03	N/A	-	1
111	GTS-MFN-302A	A-Ventilation Exhaust Fan	PS/B	E	3’-7”	FA3-104-03	N/A	-	1
112	GTS-MFN-302B	B-Ventilation Exhaust Fan	PS/B	E	3’-7”	FA3-103-03	N/A	-	1
113	GTS-MFN-302C	C-Ventilation Exhaust Fan	PS/B	W	3’-7”	FA3-109-03	N/A	-	1
114	GTS-MFN-302D	D-Ventilation Exhaust Fan	PS/B	W	3’-7”	FA3-111-03	N/A	-	1
115	GTS-SOV-109A	Air Start Solenoid Valves in Starting Air Valve Unit	PS/B	E	3’-7”	FA3-104-03	N/A	-	1
116	GTS-SOV-110A	Air Start Solenoid Valves in Starting Air Valve Unit	PS/B	E	3’-7”	FA3-104-03	N/A	-	1
117	GTS-SOV-109B	Air Start Solenoid Valves in Starting Air Valve Unit	PS/B	E	3’-7”	FA3-103-03	N/A	-	1
118	GTS-SOV-110B	Air Start Solenoid Valves in Starting Air Valve Unit	PS/B	E	3’-7”	FA3-103-03	N/A	-	1
119	GTS-SOV-109C	Air Start Solenoid Valves in Starting Air Valve Unit	PS/B	W	3’-7”	FA3-109-03	N/A	-	1
120	GTS-SOV-110C	Air Start Solenoid Valves in Starting Air Valve Unit	PS/B	W	3’-7”	FA3-109-03	N/A	-	1
121	GTS-SOV-109D	Air Start Solenoid Valves in Starting Air Valve Unit	PS/B	W	3’-7”	FA3-111-03	N/A	-	1
122	GTS-SOV-110D	Air Start Solenoid Valves in Starting Air Valve Unit	PS/B	W	3’-7”	FA3-111-03	N/A	-	1
123	GTS-LT-005	Level Transmitter of the Fuel Oil Day Tank	PS/B	E	3’-7”	FA3-104-03	N/A	-	1

Table 3K-4 PS/B Components Protected From Internal Flooding (Sheet 9 of 9)

Item No.	Equipment Tag	Description	Location					Flood Elevation above Floor [ft]	Notes
			Building	Side	Floor Elevation	Fire Zone No.	Location Elevation above Floor		
124	GTS-LT-006	Level Transmitter of the Fuel Oil Day Tank	PS/B	E	3’-7”	FA3-103-03	N/A	-	1
125	GTS-LT-007	Level Transmitter of the Fuel Oil Day Tank	PS/B	W	3’-7”	FA3-109-03	N/A	-	1
126	GTS-LT-008	Level Transmitter of the Fuel Oil Day Tank	PS/B	W	3’-7”	FA3-111-03	N/A	-	1

Notes:

1. These components are protected by water-tight door against in-flow of flooding occurring outside of compartment. In addition, these components are not required to be protected against flooding occurring inside the compartment due to redundancy of other trains/components.

2. The electrical interconnections (e.g., cables) servicing components are excluded as SSCs requiring protection against internal flooding, because the cables in PS/B are located above the internal flooding level and maintain their function in case of any internal flooding.

Security-Related Information – Withheld Under 10 CFR 2.390

Figure 3K-1 Location of Watertight Doors and Flood Barrier Walls R/B Plan View Elevation -26'-4"

Security-Related Information – Withheld Under 10 CFR 2.390

Figure 3K-2 Location of Watertight Doors and Flood Barrier Walls R/B Plan View Elevation -8'-7"

Security-Related Information – Withheld Under 10 CFR 2.390

Figure 3K-3 Location of Watertight Doors and Flood Barrier Walls R/B Plan View Elevation 3'-7"

Security-Related Information – Withheld Under 10 CFR 2.390

Figure 3K-4 Location of Watertight Doors and Flood Barrier Walls R/B Plan View Elevation 13'-6"

Security-Related Information – Withheld Under 10 CFR 2.390

Figure 3K-5 Location of Watertight Doors and Flood Barrier Walls R/B Plan View Elevation 25'-3"

Security-Related Information – Withheld Under 10 CFR 2.390

Figure 3K-6 Location of Watertight Doors and Flood Barrier Walls R/B Plan View Elevation 35'-2"

Security-Related Information – Withheld Under 10 CFR 2.390

Figure 3K-7 Location of Watertight Doors and Flood Barrier Walls R/B Plan View Elevation 50'-2"

Security-Related Information – Withheld Under 10 CFR 2.390

Figure 3K-8 Location of Watertight Doors and Flood Barrier Walls R/B Plan View Elevation 76'-5"

Security-Related Information – Withheld Under 10 CFR 2.390

Figure 3K-9 Location of Watertight Doors and Flood Barrier Walls R/B Plan View Elevation 101'-0"

Security-Related Information – Withheld Under 10 CFR 2.390

Figure 3K-10 Location of Watertight Doors and Flood Barrier Walls R/B Plan View Elevation 115'-6"

Security-Related Information – Withheld Under 10 CFR 2.390

Figure 3K-11 Location of Watertight Doors and Flood Barrier Walls PS/Bs Plan View Elevation -26'-4", -14'-2"

Security-Related Information – Withheld Under 10 CFR 2.390

Figure 3K-12 Location of Watertight Doors and Flood Barrier Walls PS/Bs Plan View Elevation 3'-7", 24'-2", 39'-6"

APPENDIX 3L

CRITICAL SECTIONS FOR REACTOR BUILDING COMPLEX

CONTENTS

Page

3L Critical Sections for Reactor Building Complex 3L-1

3L.1 Introduction 3L-1

3L.2 Critical Section Selection Criteria 3L-1

3L.3 Locations of Critical Sections 3L-3

3L.3.1 Prestressed Concrete Containment Vessel 3L-3

3L.3.2 Containment Internal Structure 3L-3

3L.3.3 Reactor Building 3L-3

3L.3.4 East and West Power Source Building 3L-3

3L.3.5 Essential Service Water Pipe Chase 3L-4

3L.3.6 Basemat 3L-4

3L.3.7 Typical Reinforced Concrete Connections 3L-4

3L.4 Structural Analysis and Design 3L-4

3L.4.1 Analysis Approach 3L-4

3L.4.1.1 Prestressed Concrete Containment Vessel 3L-4

3L.4.1.2 Containment Internal Structure 3L-5

3L.4.1.3 Other R/B Complex Structures 3L-5

3L.4.1.4 Basemat 3L-6

3L.4.2 Design Approach 3L-6

3L.4.2.1 Boundaries of Jurisdiction Between Applicable Codes 3L-6

3L.4.2.2 Prestressed Concrete Containment Vessel 3L-7

3L.4.2.3 Containment Internal Structure 3L-8

3L.4.2.4 Other R/B Complex Structures 3L-8

3L.5 Structural Design of Critical Section 3L-10

3L.5.1 Prestressed Concrete Containment Vessel 3L-10

3L.5.1.1 General Shell Areas 3L-10

3L.5.1.2 Buttress Areas 3L-11

3L.5.1.3 Equipment Hatch and Airlock Areas 3L-12

CONTENTS

Page

3L.5.1.4 Fuel Transfer Tube and Main Steam Penetrations 3L-12

3L.5.2 Containment Internal Structure 3L-13

3L.5.3 Reactor Building 3L-13

3L.5.4 East and West Power Source Building 3L-16

3L.5.5 Essential Service Water Pipe Chase 3L-18

3L.5.6 Basemat 3L-19

3L.5.7 Typical Reinforced Concrete Connections 3L-20

3L.6 References 3L-20

TABLES

Page

Table 3L-1 Shear Force Demand vs. Capacity for Walls 3L-22

Table 3L-2 Required Reinforcing Steel for Walls 3L-26

Table 3L-3 Required Transverse Shear Reinforcing Steel for Walls 3L-28

Table 3L-4 Required Reinforcing Steel for Critical Areas (Slabs) 3L-30

Table 3L-5 Required Transverse Reinforcing Steel for Critical Areas (Slabs) 3L-30

Table 3L-6 PCCV Cylinder Reinforcement Schedule 3L-31

Table 3L-7 PCCV Dome Reinforcement Schedule 3L-31

Table 3L-8 Equipment Hatch Reinforcement Schedule 3L-32

Table 3L-9 Airlock 1 Reinforcement Schedule 3L-32

Table 3L-10 Airlock 2 Reinforcement Schedule 3L-32

Table 3L-11 Demand to Capacity Ratios for Cylinder and Dome Evaluations 3L-33

Table 3L-12 Demand to Capacity Ratios for Buttress Evaluations 3L-35

Table 3L-13 Demand to Capacity Ratios for Equipment Hatch and Airlock Evaluations 3L-37

Table 3L-14 Demand to Capacity Ratios for Basemat Evaluations 3L-39

Table 3L-15 Fuel Handling Area Beam and Column Section Properties 3L-40

Table 3L-16 Fuel Handling Area Beam and Column Design Summary 3L-40

Table 3L-17 Capacity of Principal Penetration Critical Sections 3L-41

Table 3L-18 Demand to Capacity Ratios for Peripheral Shear at Penetrations 3L-41

Table 3L-19 Code Jurisdiction for Structural Components at PCCV Interface 3L-42

FIGURES

Page

Figure 3L-1 Boundary of Jurisdiction of ASME Code 3L-43

Figure 3L-2 Boundary of Jurisdiction of ASME Code at Basemat 3L-46

Figure 3L-3 PCCV Design Groups 3L-47

Figure 3L-4 PCCV Cylinder Design Element Groups 3L-48

Figure 3L-5 PCCV Dome Design Element Groups – Elevation 3L-48

Figure 3L-6 PCCV Dome Design Elements Groups – Plan 3L-49

Figure 3L-7 PCCV Design Elements for 3-Tendon Area 3L-49

Figure 3L-8 PCCV Buttress Design Groups 3L-50

Figure 3L-9 PCCV Buttress Design Elements 3L-50

Figure 3L-10 Equipment Hatch Design Element Groups 3L-51

Figure 3L-11 Personnel Airlock #1 Design Groups 3L-51

Figure 3L-12 Personnel Airlock #2 Design Groups 3L-52

Figure 3L-13 PCCV Buttress Elevation Section – Cylinder (EL. 3’-7” to 51’-11”) 3L-53

Figure 3L-14 PCCV Buttress Elevation Section – Cylinder (EL. 51’-11” to 99’-11”) 3L-54

Figure 3L-15 PCCV Buttress Elevation Section – Cylinder (EL. 99’-11” to 153’-9”) 3L-55

Figure 3L-16 PCCV Buttress Elevation Section – Dome 3L-56

Figure 3L-17 Buttress Meridional Reinforcement Details 3L-57

Figure 3L-18 Reinforcement Groups for R/B Complex Basemat 3L-62

Figure 3L-19 Section Cuts for R/B Complex Basemat Design 3L-62

Figure 3L-20 Basemat East-West Section Cut 3L-63

Figure 3L-21 Basemat South-North Section Cut 3L-63

Figure 3L-22 Basemat East PS/B Section Cut 3L-64

Figure 3L-23 Basemat Categorization of Sub-Section Cuts 3L-64

FIGURES

Page

Figure 3L-24 Structural Model of Basemat and R/B Complex Superstructure..... 3L-65
Figure 3L-25 Fuel Handling Area Steel Girders and Columns-Isometric..... 3L-66
Figure 3L-26 Fuel Handling Area Steel Design Configuration-Section..... 3L-67
Figure 3L-27 R/B Critical Section 1 – Isometric View 3L-68
Figure 3L-28 R/B Critical Section 2 – Isometric View 3L-68
Figure 3L-29 R/B Critical Section 3 – Isometric View 3L-69
Figure 3L-30 R/B Critical Section 4 – Isometric View 3L-69
Figure 3L-31 R/B Critical Section 5 – Isometric View 3L-70
Figure 3L-32 R/B Critical Area 3 – Isometric View..... 3L-71
Figure 3L-33 R/B Critical Area 4 – Isometric View..... 3L-72
Figure 3L-34 West PS/B Critical Section 1 – Isometric View..... 3L-73
Figure 3L-35 West PS/B Critical Section 2 – Isometric View..... 3L-73
Figure 3L-36 West PS/B Critical Section 3 – Isometric View..... 3L-74
Figure 3L-37 West PS/B Critical Area 1 – Isometric View 3L-74
Figure 3L-38 East PS/B Critical Section 1 – Isometric View..... 3L-75
Figure 3L-39 East PS/B Critical Section 2 – Isometric View..... 3L-75
Figure 3L-40 East PS/B Critical Area 1 – Isometric View 3L-76
Figure 3L-41 ESWPC Critical Section 1 – Isometric View 3L-76
Figure 3L-42 ESWPC Critical Section 2 – Isometric View 3L-77
Figure 3L-43 ESWPC Critical Slab Area 1 – Isometric View 3L-77
Figure 3L-44 Wall to Basemat Connection Detail 3L-78
Figure 3L-45 Slab to Wall Connection Detail (A) 3L-78
Figure 3L-46 Slab to Wall Connection Detail (B) 3L-79
Figure 3L-47 Slab to Wall Connection Detail (C) 3L-79
Figure 3L-48 Slab to Wall Connection Detail (D) 3L-80

FIGURES

Page

Figure 3L-49 Slab to Wall Connection Detail (E) 3L-80

Figure 3L-50 Typical Reinforcing Details at Penetrations 3L-81

Figure 3L-51 Representative Reinforcing Detail at Fuel Transfer Tube at PCCV 3L-82

Figure 3L-52 Representative Reinforcing Detail at MS Penetrations at PCCV 3L-83

Figure 3L-53 Elevation of Peripheral Reinforcing Steel (Ties) at MS Penetrations 3L-84

ACRONYMS AND ABBREVIATIONS

A/B	auxiliary building
ACI	American Concrete Institute
AISC	American Institute of Steel Construction
ANSI	American National Standards Institute
ASCE	American Society of Civil Engineers
ASME	American Society of Mechanical Engineers
CIS	containment internal structure
DCR	demand to capacity ratio
DOF	degrees of freedom
ESWPC	essential service water pipe chase
FE	finite element
MS	main steam
NRC	U.S. Nuclear Regulatory Commission
PCCV	prestressed concrete containment vessel
PS/B	power source building
R/B	reactor building
RCP	reactor coolant pump
RG	regulatory guide
RV	reactor vessel
RWSP	refueling water storage pit
SFP	spent fuel pit
SC	steel concrete
SG	steam generator
SRP	standard review plan
SRSS	square root sum of the squares
T/B	turbine building

3L Critical Sections for Reactor Building Complex

3L.1 Introduction

This appendix summarizes the structural design and analysis of critical sections of the reactor building (R/B) complex. The design summary included in this appendix provides the following information:

Section 3L.2: critical section selection criteria

Section 3L.3: locations of critical sections

Section 3L.4: description of the three-dimensional finite element (FE) analysis and design approach used in structural design

Section 3L.5: structural design results for critical sections

Content included in this appendix provides additional information and details that support previously defined descriptions, tables, and figures included in Section 3.8. This appendix provides information on specific areas of structural analysis review for all seismic category I structures in accordance with standard review plan (SRP) Sections 3.8.1, 3.8.3, 3.8.4 and 3.8.5 (References 3L-12 through 3L-15).

All dimensions and elevations provided in this appendix are considered as nominal values and are subject to engineering and construction tolerances. The tolerances are either permitted tolerances for the invoked codes for standard plant design or the results of specifically identified unique tolerances that apply. In some cases, reinforcing bar congestion will require that some level of adjustment be made in reinforcement bar placement around interferences, including penetration sleeves and other anchorage hardware in order to facilitate fabrication and construction.

3L.2 Critical Section Selection Criteria

Emphasis has been placed on selection of members responsible for overall structural performance under extreme environmental and abnormal loading conditions. These members include the lateral force resisting system as well as members that experience loads from fluids, lateral earth pressure and large thermal temperature gradients. The criteria for selection of critical sections of the US-APWR are based on the following:

A. The structural component must be seismic category I

   a. Deemed to be safety critical

   b. Deemed to be a critical load bearing component

B. The structural component must be representative of the structure

   a. Typical structural elements represented

   b. Axisymmetric section or detail (containment)

c. Representative of details associated with standard plant design configuration

d. Common interior walls between building structures

C. The structural component is expected to experience large structural demands from temperature variations, seismic loads or earth pressures

a. Critical to seismic load path

b. Experience hydrostatic and hydrodynamic fluid forces

c. Experience static and dynamic earth pressures

d. Experience significant thermal loading

D. Supplemental Criteria

a. Complex connection or important junction with discontinuity

b. Component vital to maintaining a leak tight design (pressure boundary)

c. Member supporting important equipment

The following definitions are used in the description of critical sections:

Critical Section – A specific structural area of interest deemed to be a critical load bearing element, selected based on the criteria established above.

Area – Critical section design component composed of a reinforced concrete slab.

Zone – Critical section design component such as a wall or localized portion of the basemat. Zones of evaluation (also referred to as sub-sections) for the basemat are found along one of three principal basemat section cuts.

Group – Critical section design component of similar geometry and reinforcement configuration.

Typical – In the context of design, “typical” is a detail that is replicated in numerous areas as shown in construction drawings and details. It is a repeated design element with a defined configuration.

Representative – “Representative” is used to define a section that is similar in configuration to other areas. Being similar in design to other areas selected, representative sections reflect the general configuration for multiple areas of the structure.

3L.3 Locations of Critical Sections

Refer to Section 3.8 and Section 3L.5 of this appendix for specific descriptions and locations for US-APWR critical sections. The following information provides a summary of the locations where critical section locations are provided.

3L.3.1 Prestressed Concrete Containment Vessel

Prestressed concrete containment vessel (PCCV) cylinder and dome – Refer to Figures 3.8.1-1 and 3.8.1-5 for general locations and Figures 3L-3 through 3L-7 for further details on the evaluated critical sections.

PCCV buttress – Refer to Figures 3.8.1-1 and 3.8.1-5 for general locations and Figures 3L-8 and 3L-9 for specific details on the evaluated critical sections.

PCCV equipment hatch – Refer to Figures 3.8.1-1 and 3.8.1-5 for general location and Figure 3L-10 for specific details on the evaluated critical sections.

PCCV airlocks – Refer to Figures 3.8.1-1 and 3.8.1-5 for general locations and Figures 3L-11 and 3L-12 for specific details on the evaluated critical sections.

Main steam (MS) and fuel transfer tube penetrations – Refer to Figures 3.8.1-1 and 3.8.1-5 for general locations of the MS penetrations (P509 through P512) and fuel transfer tube (P200). The location and configuration description of the penetrations are provided in further detail in Section 3.8.1.1.4. Refer to Figures 3.8.1-8, sheets 13 and 17 for steel component dimensional details. Refer to Figures 3L-50 through 3L-53 for specific reinforced concrete details of the PCCV cylinder shell on these two critical sections. The fuel transfer tube is located at elevation 38 ft, 10.5 in. and positioned at an offset of 7 ft, 8.5 in. from azimuth degrees.

3L.3.2 Containment Internal Structure

Refer to Figures 3.8.3-7 and 3.8.3-11 for general locations and specific details on the evaluated critical sections.

3L.3.3 Reactor Building

Shear walls and area slabs – Refer to Figure 3.8.4-3 for general locations and Figures 3L-27 through 3L-33 for isometric views of the reinforced concrete critical sections that are evaluated.

Fuel handling area – Refer to Figure 3.8.5-2 for general location of the fuel handling area and Figures 3L-25 and 3L-26 for isometric and elevation view of the structural steel sections that are evaluated.

3L.3.4 East and West Power Source Building

West PS/B – Refer to Figures 3.8.4-12 and 3.8.4-13 for general locations and Figures 3L-34 through 3L-37 for isometric views of the evaluated critical sections.

East PS/B – Refer to Figures 3.8.4-18 and 3.8.4-19 for general locations and Figures 3L-38 through 3L-40 for isometric views of the evaluated critical sections.

3L.3.5 Essential Service Water Pipe Chase

Refer to Figure 3.8.4-23 for general locations and Figures 3L-41 through 3L-43 for isometric views of the evaluated critical sections.

3L.3.6 Basemat

Refer to Figures 3L-18 and 3L-19 for general location of the critical sections and Figures 3L-20 through 3L-22 for isometric view of the principal section cuts evaluated.

3L.3.7 Typical Reinforced Concrete Connections

Refer to vertical cross sections provided in Figures 3.8.4-4 through 3.8.4-24 for general locations of typical reinforced concrete connection details and Figures 3L-44 through 3L-49 for specific details on concrete connections considered in the design.

3L.4 Structural Analysis and Design

3L.4.1 Analysis Approach

The US-APWR R/B complex consists of the R/B, PCCV, containment internal structure (CIS), auxiliary building (A/B), east PS/B, west PS/B, and essential service water pipe chase (ESWPC), which are all supported on a common reinforced concrete basemat. Although the structures that comprise the R/B complex share a common basemat, the CIS and PCCV structures are structurally independent and are therefore modeled and analyzed separately. The ANSYS (Reference 3L-9) FE program is used to perform the structural analyses for all superstructure of the R/B complex and basemat.

3L.4.1.1 Prestressed Concrete Containment Vessel

FE models are used to analyze the PCCV's response to the design loading. These models are developed using ANSYS (Reference 3L-9) FE program. Shell elements with six degrees of freedom (DOF) are used to model the PCCV cylinder and dome. The nodes at the bottom of the PCCV cylinder (where the PCCV meets the basemat, elevation 3 ft, 7 in.) are fixed.

According to American Society of Mechanical Engineers (ASME) Code (Reference 3L-3) Article CC-3121, the design of the PCCV shall not account for strength contributions from the steel liner. As such, the liner plate is not designed or considered as a structural member in providing for the overall PCCV load resistance. However, the mass of the liner is included in model by increasing the mass density of the concrete shell elements to account for the dead weight of the liner.

Polar crane girders are modeled with six DOF beam elements. The mass of the polar crane is lumped into four mass elements split between the brackets located at azimuth zero degrees and azimuth 180 degrees.

Post-tensioning loads are modeled in ANSYS by applying pseudo-thermal temperature differences to each respective tendon shell element in the PCCV. The shell elements used to apply prestress in the model are membrane only (three DOF) elements. Therefore, the elements do not add flexural stiffness to the model.

3L.4.1.2 Containment Internal Structure

This section is reserved for providing a general discussion of the ANSYS FE models used for analysis and design of the CIS.

3L.4.1.3 Other R/B Complex Structures

The global FE model of the R/B, east PS/B and west PS/B, A/B, and ESWPC contains a large amount of structural elements. Because of this, individual FE analysis geometric models with keypoints, lines, areas, and volumes defining each building are utilized in order to create the geometry of each building.

After check and verification of the FE models for each building, the individual models are merged and meshed with proper element attributes (element type, material property, real constant and section properties) for the combined structural model of the R/B complex. The thicknesses of the concrete walls and slabs represented by shell elements are specified by real constants that are assigned as area attributes prior to meshing. The mesh size is controlled such that the length of each element is less than five feet. This allows for three to four elements between major floors to properly capture flexural behavior of slender wall piers. The shell elements are consistently oriented for reinforcing steel design such that:

- Top faces of the walls running north-south are along the plant west side (the positive Y-direction in the global coordinate system)
- Top faces of the walls running east-west are along the plant north side (the positive X-direction in the global coordinate system)
- Top faces of the slabs are along the positive Z-direction in the global coordinate system.

The global FE model is assumed "fixed" at the top of the basemat. Therefore, the translational and rotational DOF in the X-, Y-, and Z-directions of all nodes at elevation -26 ft, 4 in. (top of the basemat) are assumed "fixed." In addition, all nodes located around the center core of the basemat under the PCCV and CIS are assumed "fixed."

A constant modal damping ratio of four percent is considered in the response spectrum analysis. Response spectrum analyses for the R/B complex are performed using the Lindley-Yow method described in U.S. Nuclear Regulatory Commission (NRC) regulatory guide (RG) 1.92 (Reference 3L-10) and in NUREG/CR-6645 (Reference 3L-8). The Lindley-Yow method divides the total seismic building response into two components: in-phase response with the ground motion (“rigid” response) and out-of-phase response with the ground motion (“periodic” response). The modal responses are combined using the complete quadratic combination method. All significant modes below a cut-off

frequency of 60-Hz are considered. Seismic loads include the dynamic response of the soil, hydrodynamic response of the liquid in chambers of the R/B, inertial response of the structure due to seismic excitation, and accidental torsion.

After the R/B complex is analyzed for each load case and soil profile, the total seismic response in each direction is calculated using the square root of the sum of the squares (SRSS) of the dynamic fluid response, dynamic earth pressure response, and in-phase and out-of-phase components of seismic response. The three directional responses are combined using SRSS in accordance with American Society of Civil Engineers (ASCE) 4-98, Section 3.2.7.1.2 (Reference 3L-11), then summed with the absolute value of the response. Refer to Section 3.8.4.4.1 for further details on response spectrum analysis methods used in the design analysis of the R/B, A/B, east PS/B, west PS/B and ESWPC.

3L.4.1.4 Basemat

The foundation of the R/B complex is modeled in ANSYS using solid elements with three DOF. The R/B complex foundation is modeled in detail to reflect the actual geometry. The tendon gallery is modeled to accurately reflect the foundation behavior due to vertical tendon anchorage within the foundation and variation in concrete material compressive strengths. Refer to Figure 3L-24 for a sectional view of the three dimensional FE analysis model supported on soil.

The R/B complex is also modeled to reflect the R/B, east PS/B, west PS/B, A/B, and ESWPC, each with a large amount of structural elements. The R/B complex wall shell elements are extended into the foundation solid elements to ensure a proper transfer of bending moment between each. Likewise, slab shell elements joining the solid foundation are extended properly to overlay the solid top surface. These connecting elements are also assigned a zero density, where applicable, in order to not increase the overall mass of the foundation.

A total of four models are generated. Two soil models are created to represent the soil elements, including a soft soil profile for the lower bound (Soil Profile 270-500) and a hard rock soil profile for the upper bound (Soil Profile 2032-100). The basemat subgrade is included in the detailed static FE models used for structural design by meshing a sufficiently large volume of soil/rock below and around the basemat. The stiffness of the remaining underlying soil/rock foundation media profiles are modeled in ANSYS as a super-element using a procedure known as sub-structuring. Sub-structuring is a modeling technique in which a group of regular FEs is condensed into a single super-element.

3L.4.2 Design Approach

3L.4.2.1 Boundaries of Jurisdiction Between Applicable Codes

Establishment of boundaries of jurisdiction and code edition is required by Subarticles NCA-1140 and NCA-3254 of the ASME Boiler and Pressure Vessel Code (Reference 3L-4). Section 3.8 provides a description of the applicable codes and standards for the US-APWR design. This section is provided to further clarify specific interfaces between ASME, American Institute of Steel Construction (AISC) and American Concrete Institute (ACI) codes.

The polar crane bracket, hatches, sleeve penetrations, liner attachments, and containment spray supports require specific delineation of extents to which the Section III, Division 2 of the ASME Boiler and Pressure Vessel Code is applied. The boundaries of code jurisdiction are summarized in Figures 3L-1 and 3L-2. The R/B complex basemat serves as an integral support to the PCCV, with the upper plane of the basemat forming the lower boundary of the containment. As shown in Figure 3L-2, the entire basemat is governed by Section III, Division 2 of the ASME Code. This is consistent with the general requirements of NCA-3254.

Refer to Table 3L-19 for a summary of primary and secondary codes that apply to interfacing structural components along the PCCV and basemat interface.

3L.4.2.2 Prestressed Concrete Containment Vessel

The selection of elements for the PCCV design considers the elements in each design group that best represent the stresses acting on the PCCV shell in that area.

Design methods incorporate the membrane forces and moments at discrete locations from the FE analysis acting on defined member section properties. The design evaluates mechanical member loads and thermal gradients across post-tensioned concrete containment vessel sections. The design method combines two independent methodologies: (1) “Theory of Section Analysis for Mechanical Membrane plus Bending Loads” and (2) “Stress Shift Method for Thermal plus Mechanical Loads”. All design computations are performed in accordance with Article CC-3000 of the ASME Section III, Division 2 code (Reference 3L-3).

Both thermal winter operating and accident temperatures control the design of the PCCV over the summer thermal loads. For the winter condition, the thermal bending is positive (compression on the inside face) because the PCCV inside temperature is always greater than the outside temperature (exposed to the environment). Radial reinforcing steel is designed to resist radial tensile forces generated in response to curved hoop and/or dome tendons. Tensile capacity of concrete is not considered. The following relationship is used to determine the required radial reinforcing steel area:

$$A_s = \frac{x_b \cdot q \cdot A_c}{0.67 \cdot f_y \cdot t}$$

Where:

A_s = Area of radial reinforcement steel (in^2)

A_c = Area of concrete for each radial bar, equal to spacing squared if a square pattern is used (in^2)

t = Concrete thickness (in)

x_b = Distance from the outside face to the centroid of the prestressing tendon group (in)

q = The normal pressure after transfer of prestress due to all curved tendons (psi)

f_y = yield strength of radial reinforcement (psi)

Radial reinforcing steel bars are provided to ensure that the entire PCCV concrete thickness functions as a unit and preclude development of delamination planes.

3L.4.2.3 Containment Internal Structure

This section is reserved for providing a general description of the methodology used for designing steel concrete (SC) module walls for the applied forces and moments.

3L.4.2.4 Other R/B Complex Structures

The design code of record for the reinforced concrete structural members for the other seismic category I and II structures is ACI 349-06 (Reference 3L-1). The design code of record for the steel members in the fuel handling area of the R/B is AISC N690 (Reference 3L-2). The R/B, east PS/B, west PS/B, ESWPC, and common walls shared with the A/B are designated as safety-related, seismic category I structures as defined in 10 CFR 50.2 (Reference 3L-7). The required structural member strength is at least equal to the effects of the factored loading. Strength reduction factors (φ) are applied to all concrete member capacities in accordance with ACI 349-06, Section C.3.2.

The process for designing walls and slabs is as follows: Loads are applied to the FE analysis model, and analysis is performed for all considered load cases. Load cases are combined within the FE analysis program. For each considered wall or slab component, eight internal forces, N_x, N_y, N_{xy}, M_x, M_y, M_{xy}, Q_x, and Q_y, are extracted. N_x and N_y are the membrane forces in the X and Y directions. N_{xy} is the in-plane shear force. M_x, M_y, and M_{xy} are the moments in the X, Y, and Z directions. Q_x and Q_y are the out-of-plane shear forces at the centroid of each element. The extracted forces are then analyzed to determine the required reinforcing steel and perform code checks for minimum reinforcing steel.

Reinforcing steel sizes and spacing are designated for efficiency and consistency for similar section thicknesses. Typical rebar spacing is set at 6 in. and 12 in. (nominal). Minimum concrete cover for reinforcing steel bars is taken from ACI 349-06, Section 7.7 (Reference 3L-1). Concrete cover depth for reinforcing steel in the calculations is conservatively defined as the distance from the face of the concrete wall/slab to the center of the inner most bar. This approach is taken to accommodate potential changes in reinforcing configuration and/or as-built placement conditions that prove to be outside limits specified in the construction drawings and specifications. Refer to Tables 3L-2 and 3L-5 for reinforcing steel cover depths considered in design evaluations for critical sections. Actual specified cover depth on construction documents will be less than or equal to the maximum permissible cover depth specified in this appendix without violating the minimum clear cover requirements.

Clear cover distance varies and is a function of the concrete exposure to earth or weather. Horizontal reinforcing steel is located outside of the vertical reinforcing steel in order to increase resistance to the buckling of vertical reinforcing bars under axial/flexural compression loading conditions.

Wall reinforcing steel area is determined for out-of-plane bending combined with in-plane axial and shear load. For the in-plane shear capacity, Section 21.7 of ACI 349-06 (Reference 3L-1) is used. The shear strength of reinforced concrete walls is based on ACI 349-06, Section 21.7.4:

$$V_n = A_{cv}\left(\alpha_c \sqrt{f_c'} + \rho_t f_y\right) \qquad \text{(Eq. 1)}$$

where α_c is 3.0 for $h_w / l_w \leq 1.5$, and $h_w/l_w \geq 2.0$.

Section 21.7.4.4 of ACI 349-06 (Reference 3L-1) also specifies the shear strength limit as follows:

For all wall piers sharing a common lateral force, $V_n \leq 8A_{cv}\sqrt{f_c'}$ (Eq. 2)

For any one of the individual wall piers, $V_n \leq 10A_{cw}\sqrt{f_c'}$ (Eq. 3)

The shear demands at the top and bottom of the wall piers are calculated and compared to the total shear strength defined in Eq. 1, Eq. 2 and Eq. 3. Refer to Table 3L-1 for a summary of the shear force demand as compared to the strength of the walls. Detailed information of member thickness and strength is included for purposes of reconciliation between design and as-built conditions.

In general, boundary element reinforcing steel for shear walls is not required. Reinforced concrete beams and columns are designed for applied axial, flexural and shear forces. These members serve as collector and chord elements within the shear wall system.

Slab reinforcing steel area is determined for out-of-plane bending with in-plane axial load and shear. The slabs are designed primarily as two-way slab members spanning between a network of walls, beams and columns. Longitudinal reinforcement is designed for the maximum combined force effects including tension and bending moment that exist along the span of the slab.

The required reinforcing steel area for top and bottom faces in the X (horizontal) and Y (vertical) directions for each element is calculated. Refer to Section 3L.4.1.3 for orientation of shell elements for reinforced concrete design.

Transverse shear reinforcement is provided in accordance to ACI 349-06 Sections 11.10.1 and 11.12.3.1 (Reference 3L-1). The shear reinforcement strength is checked per ACI 349-06 Sections 11.5.7.2 and 11.5.7.9. Refer to Table 3L-3 for a summary of the required transverse shear reinforcement, the shear reinforcement provided, and the extents to which shear ties are required in the wall or slab. Shear reinforcement spacing is limited as prescribed in ACI 349-06 Section 11.5.5. Typically, transverse shear reinforcement is only required in localized areas of a wall; however, some walls will require transverse shear reinforcement throughout the entire wall. Transverse shear reinforcement is required where the out-of-plane shear forces exceed the concrete shear capacity of the wall. Concrete shear strength ϕV_c is computed per ACI 349-06 Section

11.3 (Reference 3L-1) and accounts for axial load effects on the concrete shear strength for each wall element.

3L.5 Structural Design of Critical Section

This Section provides detailed information on the application of the selection criteria in determining critical sections for reinforced concrete and structural steel described in Sections 3.8.1, 3.8.3, 3.8.4 and 3.8.5. In addition, the results of the structural evaluations including the required and provided reinforcing steel are provided. In some instances, particularly in the conditions of the PCCV and basemat, design results are reported in terms of a demand to capacity ratio. This approach is taken where working stress design methods are utilized and where a specific comparison is made against a code permissible strength or allowable stress.

3L.5.1 Prestressed Concrete Containment Vessel

PCCV sections that are deemed safety-critical, expected to experience large structural demands, or representative structural elements have been identified. PCCV design groups represent typical cylinder, buttress, and dome sections. The cylinder wall and dome sections are comprised of 16 design groups varying from the base of the PCCV to the apex of the dome, away from model discontinuities. The buttress design utilizes 14 design groups, and the equipment hatch/airlock penetrations each consider four design groups.

Design results are provided that indicate the maximum demand to capacity ratio for the applicable design limits. The demand to capacity ratio that are reported provide an indication of the design margin that is maintained in the design of the PCCV when subjected to the design loading conditions. Selection and results for the critical section design groups are as follows:

3L.5.1.1 General Shell Areas

The selection of elements for the basic design of the PCCV structure considers the elements in each design group that best represent the stresses acting on the PCCV shell in that area.

The elements selected in the cylinder portion are located at approximately azimuth 322 degrees in ANSYS model, shown in Figures 3L-3 and 3L-4. Dome and wall principal reinforcing steel stresses are normally governed by design accident load combinations containing the 1.5Pa load. Therefore analysis results for the PCCV subjected to accident pressure loading are used to select the representative elements. Analysis of the PCCV cylinder at mid-height for the accident pressure load case showed that the cylinder experienced the largest radial displacement around azimuth 322 degrees except for the area near an airlock. Therefore, cylinder elements along this azimuth are identified as those that are sufficiently far away from any openings or discontinuities, such that the loads acting on these elements best represent the loads acting on the overall (i.e. away from discontinuities) PCCV structure for the given group, shown in Figure 3L-4.

The elements selected in the dome portion are located at approximately azimuth 180 degrees between the springline and the top of the dome and are shown in Figures 3L-3, 3L-5 and 3L-6. This area is identified as one that best represents the loads acting on the PCCV dome away from discontinuities, i.e. buttresses. Two additional elements in the dome portion of the PCCV are selected for evaluation in order to consider the stresses in the area of the PCCV dome where three tendon groups are acting as shown in Figure 3L-7. This condition case is typical of four areas in the PCCV dome.

The main basis for the grouping of Groups 1 through 14 is reinforcement schedule change, while the basis of selecting Groups 15 and 16 is the expected high concentrated stress including radial tension in areas of the dome where three tendon groups are acting. Table 3L-6 summarizes the resulting reinforcement schedule for general portions (away from discontinuities) of the PCCV cylinder between the top of the basemat and the springline of the dome. Table 3L-7 provides the reinforcement schedule for the portions of the PCCV dome away from the vicinity of the buttresses. Results of the PCCV design evaluations performed in accordance with ASME Section III, Division 2 code (Reference 3L-3) for general shell areas for the cylinder and dome are included in Table 3L-11. The results of the demand to capacity ratio for the PCCV cylinder and dome are less than or equal to 1.00 and therefore satisfy the ASME Section III, Division 2 code requirements.

3L.5.1.2 Buttress Areas

To facilitate design, the elements of the global PCCV model are organized into different groups based on area and elevation. Figures 3L-8 and 3L-9 provides a graphic representation of the location of the various groups in the buttress and shell of the PCCV structure. There are two types of design areas, the buttress areas, ending in B, and the areas in the shell of the PCCV that are adjacent to the buttresses, which end in A, shown in Figure 3L-9. For the design of the buttress, groups of four elements are chosen, all at the same elevation across the full width of the buttress having an average outside width of approximately 14 ft, 6 in. Their forces and moments are averaged together to create a single set of design forces. For the areas on the side shell that are adjacent to the buttresses, groups of four elements are selected and their forces averaged together, using a weighted average based on element size, to create design forces. The combined width of the four elements considered is approximately 27 ft. Calculations consider elements located in the PCCV dome and sideshell in order to evaluate the impact on design due to forces and moments at discontinuities. The design considers a construction tolerance of ± 3 in. for the buttress thickness.

The elements selected for the design of the PCCV buttresses are located on the buttress at azimuth 90 degrees and azimuth 270 degrees in ANSYS model. Additional elements are selected for design evaluation directly next to buttress elements. Refer to Table 3L-12 for details on the design results for the buttress areas A and B shown in Figure 3L-9. Final reinforcing steel design configurations for the buttress are provided in Figures 3L-13 through 3L-17. Results of the PCCV design evaluations performed in accordance with ASME Section III, Division 2 code (Reference 3L-3) for the buttress are included in Table 3L-12. The results of the demand to capacity ratio for the PCCV buttresses are less than or equal to 1.00 and therefore satisfy the ASME Section III, Division 2 code requirements.

3L.5.1.3 Equipment Hatch and Airlock Areas

For the analysis of the equipment hatch and airlock areas, changes are made in the areas around the equipment hatch and the airlocks in order to better capture the behavior of the structure in these locations. Specifically, portions around the equipment hatch and airlock area of the model are removed for the purpose of applying a more refined mesh and to use link elements to model prestressing tendons.

A total of 12 groups of elements are considered for the design of the thickened sections of the PCCV at the equipment hatch and airlock penetrations. Four groups are chosen for each of the three penetrations and can be seen as shown in Figures 3L-10 through 3L-12. The equipment hatch element group is comprised of 14 elements. Each airlock element group consists of 10 elements. The forces from each element, obtained from ANSYS three-dimensional model, are averaged together to create design loads for each group. Tables 3L-8 through 3L-10 summarize the reinforcement schedule for concrete sections in the vicinity of the equipment hatch, airlock 1, and airlock 2, respectively. Results of the PCCV design evaluations performed in accordance with ASME Section III, Division 2 code (Reference 3L-3) in the area of the equipment hatch and airlocks are included in Table 3L-13. The results of the demand to capacity ratio for the equipment hatch and airlock are less than or equal to 1.00 and therefore satisfy the ASME Section III, Division 2 code requirements.

3L.5.1.4 Fuel Transfer Tube and Main Steam Penetrations

The MS and fuel transfer tube penetrations are considered to be critical sections for the US-APWR design. Refer to Figure 3.8.1-8 and Section 3.8.1.1.4 for detailed descriptions and dimensions of the penetration sleeves, anchorage flanges, nozzles and flued heads. The MS penetration sleeve transmits the greatest degree of peripheral shear forces onto the PCCV shell as compared to other mechanical penetration sleeves. Although applied loads on the fuel transfer tube are much lower than that of the MS penetration, both are considered to be critical connections to the containment pressure boundary.

Reinforcing steel demands are computed in concrete shell elements based upon applied membrane, membrane plus bending, and tangential shear. Design evaluations are performed under factored and service loading for primary and primary plus secondary loading conditions. Where tension and or tangential shear flow is disrupted by the inclusion of a sleeve penetration (associated cut reinforcing steel), additional membrane reinforcing steel bars are placed on each face (two) and on each side (four) of the opening. The added trim reinforcing steel is designed to transfer membrane tension forces and tangential shear (diagonal tension) around the opening in the concrete. Trim reinforcing placed on each side is equal to one half of the area of the main reinforcing steel. Refer to Figure 3L-50 for required typical trim reinforcing steel applicable for penetrations that are between 10 in. and 5 ft, 0 in. in diameter. Diagonal bar sets (two-#5) are provided to minimize diagonal cracking of the concrete shell in the vicinity of the penetration. Refer to Figures 3L-51 and 3L-52 for the meridional trim reinforcing steel arrangement and the additional provided U-bars in the PCCV cylinder shell for the area surrounding the fuel transfer tube and MS pipe penetrations. Trim reinforcement steel in the hoop direction for these penetrations is configured similarly.

Additional peripheral (radial) reinforcement is required around the MS pipe penetration. An additional set of #5@18 in. is inserted between the typical #5@18 in. shear ties as shown in Figures 3L-52 and 3L-53. Reinforcing bar congestion will require that some level of adjustments be made in reinforcement bar placement around penetration sleeves and associated anchorage to facilitate fabrication and construction. Results of the steel component penetration design and peripheral shear evaluations for the MS and fuel transfer tube performed in accordance with ASME Section III, Division 2 (Reference 3L-3) code are included in Tables 3L-17 and 3L-18. The results of the demand to capacity ratio for the MS and fuel transfer tube are less than or equal to 1.00 and therefore satisfy the ASME Section III, Division 2 code requirements.

3L.5.2 Containment Internal Structure

The design of the CIS focuses on evaluation of the major structural components in the CIS, which are the composite SC wall modules comprising the primary and secondary shield walls, the refueling cavity, and the refueling water storage pit (RWSP). These walls perform essential functions of the CIS, which include providing primary support of the reactor vessel (RV), steam generators (SGs), reactor coolant pumps (RCPs), and the main reactor coolant piping; providing primary and secondary radiological shielding; and providing storage and containment of the refueling water. This Section is reserved for detailed discussion on the critical sections of the CIS that are representative of the US-APWR standard plant design.

3L.5.3 Reactor Building

In general, for the other R/B complex structures, representative seismic category I shear walls and slabs considered to be critical load bearing elements are selected based on the following criteria: 1) seismic category I; 2) deemed safety critical; 3) representative of the structure; and 4) expected to experience large structural demands, temperature variations, seismic loads, or earth pressures.

See Figures 3.8.4-3 sheets 1 and 2 for illustration of the critical sections and areas for the R/B. Refer to Figures 3L-27 through 3L-33 for isometric views of the same R/B critical sections. Figures 3.8.4-4 through 3.8.4-10 provide details for vertical and horizontal reinforcing steel bar and transverse shear reinforcing steel for the critical sections. Results of the design evaluations performed in accordance with ACI 349-06 (Reference 3L-1) for R/B critical section shear walls and slabs are provided in Tables 3L-1 through 3L-5. The five critical sections and two critical areas selected for the R/B are as follows:

Critical Section 1 of the R/B shear walls is the common wall between R/B and A/B, between column lines ER and DR, as shown in Figures 3.8.4-3 and 3L-27. Table 3.8.4-6 provides a summary of the provided reinforcing steel, reinforcement to concrete ratio for each direction in terms of a percentage, and the controlling loading case combination. The thickness of this wall ranges from 28 in. to 40 in. and is divided into five zones:

Zone 1: from EL -26 ft, 4 in. to EL 3 ft, 7 in.;

Zone 2: from EL 3 ft, 7 in. to EL 25 ft, 3 in.;

Zone 3: from EL 25 ft, 3 in. to EL 50 ft, 2 in.;

Zone 4: from EL 50 ft, 2 in. to EL 76 ft, 5 in.; and

Zone 5: from EL 76 ft, 5 in. to EL 101 ft, 0 in.

Critical Section 1 is selected as a representative wall that is critical to the seismic load path. This wall which is a common wall with the A/B is designed as a seismic category I structural component.

Critical Section 2 of the R/B shear walls is the interior wall at column line JR between column lines 16bR and 15R as shown in Figures 3.8.4-3 and 3L-28. Table 3.8.4-7 provides a summary of the provided reinforcing steel, reinforcement to concrete ratio for each direction in terms of a percentage, and the controlling loading case combination. This wall is divided into six zones:

Zone 1: from EL -26 ft, 4 in. to EL 3 ft, 7 in.;

Zone 2: from EL 3 ft, 7 in. to EL 25 ft, 3 in.;

Zone 3: from EL 25 ft, 3 in. to EL 50 ft, 2 in.;

Zone 4: from EL 50 ft, 2 in. to EL 76 ft, 5 in.;

Zone 5: from EL 76 ft, 5 in. to EL 86 ft, 4 in.; and

Zone 6: from EL 86 ft, 4 in. to EL 101 ft, 0 in.

The thickness of Zone 1 is 44 in., Zone 2 is 52 in. and Zone 3 through 6 is 40 in. This critical section is selected as a representative interior wall that is critical to the seismic load path.

Critical Section 3 of the R/B shear walls is the exterior wall of the spent fuel pit (SFP) at column line AR between column lines 12aR and 11R as shown in Figures 3.8.4-3 and 3L-29. Table 3.8.4-8 provides a summary of the provided reinforcing steel, reinforcement to concrete ratio for each direction in terms of a percentage, and the controlling loading case combination. This wall is divided into three zones:

Zone 1: from EL 30 ft, 1 in. to EL 50 ft, 2 in.;

Zone 2: from EL 50 ft, 2 in. to EL 65 ft, 0 in.; and

Zone 3: from EL 65 ft, 0 in. to EL 76 ft, 5 in.

The thickness of Zone 1 and Zone 2 is 93 in. and the thickness of Zone 3 is 152 in. This critical section is selected as a representative wall that is critical to the seismic load path, resists hydrostatic and hydrodynamic fluid forces and experiences a significant thermal temperature gradient of 180 °F from the exterior face to the interior face. Hydrodynamic pressures include both impulsive and convective pressures. These combined loading effects results in significant bending moment along the restraining walls situated at column lines 12aR and 11R.

Critical Section 4 of the R/B shear walls is the exterior wall at column line LR between column lines 16bR and 14R. Refer to section locations provided in Figures 3.8.4-3 and 3L-30. Table 3.8.4-9 provides a summary of the provided reinforcing steel, reinforcement to concrete ratio for each direction in terms of a percentage, and the controlling loading case combination. This wall is divided into six zones:

Zone 1: from EL -26 ft, 4 in. to EL 3 ft, 7 in.;

Zone 2: from EL 3 ft, 7 in. to EL 25 ft, 3 in.;

Zone 3: from EL 25 ft, 3 in. to EL 50 ft, 2 in.;

Zone 4: from EL 50 ft, 2 in. to EL 76 ft, 5 in.;

Zone 5: from EL 76 ft, 5 in. to EL 101 ft, 0 in.; and

Zone 6: from EL 101 ft, 0 in. to EL 115 ft, 6 in.

The thickness of this wall is 60 in. for all zones from EL -26 ft, 4 in. to EL 115 ft, 6 in. Zone 5 is the exterior wall of the Emergency Feedwater Pit subjected to temperature gradients, hydrostatic, hydrodynamic loading including both impulsive and convective forces. This wall is also critical to resisting lateral seismic loads of the R/B complex.

Critical Section 5 of the R/B shear walls is a central interior wall between column lines LR and J1R, as shown in Figure 3.8.4-3. An isometric view of this critical section is provided in Figure 3L-31. Table 3.8.4-10 provides a summary of the provided reinforcing steel, reinforcement to concrete ratio for each direction in terms of a percentage, and the controlling loading case combination. The thickness of this wall is 40 in. and is divided into six zones:

Zone 1: from EL -26 ft, 4 in. to EL 3 ft, 7 in.;

Zone 2: from EL 3 ft, 7 in. to EL 25 ft, 3 in.;

Zone 3: from EL 25 ft, 3 in. to EL 50 ft, 2 in.;

Zone 4: EL 50 ft, 2 in. to EL 76 ft, 5 in.;

Zone 5: from EL 76 ft, 5 in. to EL 101 ft, 0 in.; and

Zone 6: from EL 101 ft, 0 in. to EL 115 ft, 6 in.

Critical Section 5 is selected as a representative interior wall that is critical to the seismic load path. This wall is the highest stressed shear wall in the R/B complex.

Critical Area 3 in the R/B is the slab for the Spent Fuel Pit at EL 30 ft, 1 in., as shown in Figures 3.8.4-3 and 3L-32. Table 3.8.4-11 provides a summary of the provided reinforcing steel, reinforcement to concrete ratio for each direction in terms of a percentage, and the controlling loading case combination. The thickness of this slab is 126 in. This slab is subjected to hydrostatic, hydrodynamic, and accidental thermal loading. The slab experiences a significant temperature gradient of 90°F from the top face to the bottom

face in addition to typical seismic inertia loads. This slab is considered to be safety critical with respect to its support of shielding water and spent fuel storage racks.

Critical Area 4 in the R/B is the slab for the Emergency Feedwater Pit at EL 76 ft, 5 in., as shown in Figures 3.8.4-3 and 3L-33. Table 3.8.4-12 provides a summary of the provided reinforcing steel, reinforcement to concrete ratio for each direction in terms of a percentage, and the controlling loading case combination. The thickness of this slab is 52 in. This slab is subjected to hydrostatic, hydrodynamic, and accidental thermal loading. This slab is considered to be safety critical with respect to its support of emergency feedwater.

Seismic forces acting on the fuel handling area are primarily resisted by the concrete shear walls in the east-west direction and by the steel beams and columns in the north-south direction. The top flanges of the fuel handling area roof beams and girders are continuously anchored to the concrete roof with headed studs and the columns are anchored to the walls in a similar fashion. The column mark numbers C1 through C3 and steel beam mark number G1 were selected as critical representative sections. These structural steel members are critical to the structural support of the fuel handling crane and provide resistance to seismic loading. Refer to Figures 3L-25 and 3L-26 for details related to the support of elevated concrete (roof) over the fuel handling area. Refer to Tables 3L-15 and 3L-16 for a summary of the results of steel member design evaluations.

3L.5.4 East and West Power Source Building

See Figures 3.8.4-12 and 3.8.4-13 for illustration of the critical sections and area of the west PS/B. Refer to Figures 3L-34 through 3L-37 for isometric views of the west PS/B critical sections. Figures 3.8.4-14 through 3.8.4-17 provide details for vertical and horizontal reinforcing steel bar as well as transverse shear reinforcing steel for the west PS/B critical section walls and slabs. Figures 3.8.4-20 through 3.8.4-22 provide details for vertical and horizontal reinforcing steel bar as well as transverse shear reinforcing steel for the east PS/B critical section walls and slabs. Results of the design evaluations performed in accordance with ACI 349-06 (Reference 3L-1) for the east PS/B and west PS/B critical section shear walls and slabs are provided in Tables 3L-1 through 3L-5. The three critical sections and one critical area selected for the west PS/B are as follows:

Critical Section 1 of the west PS/B is the south exterior wall on column line LR between column lines 1R and 3R, EL -26 ft, 4 in. to EL 49 ft, 0 in. as shown in Figures 3.8.4-12, 3.8.4-13 and 3L-34. Table 3.8.4-13 provides a summary of the provided reinforcing steel, reinforcement to concrete ratio for each direction in terms of a percentage, and the controlling loading case combination. This wall is divided into five zones:

Zone 1: from EL -26 ft, 4 in. to EL -14 ft, 2 in.;

Zone 2: from EL -14 ft, 2 in. to EL 3 ft, 7 in.;

Zone 3: from EL 3 ft, 7 in. to EL 24 ft, 2 in.;

Zone 4: from EL 24 ft, 2 in. to EL 39 ft, 6 in.; and

Zone 5: from EL 39 ft, 6 in. to EL 49 ft, 0 in.

The thickness of Zone 1 through Zone 4 is 40 in. and the thickness of Zone 5 is 21 in. This wall is chosen because it is a critical member to the seismic load path, receives lateral static and dynamic earth pressure and a moderate thermal gradient. This wall experiences passive earth pressures that result from sliding of the turbine building (T/B) against the R/B complex. A portion of this wall is a shared with the north wall of the ESWPC.

Critical Section 2 of the west PS/B is the interior wall on column line 7R between column lines JR and LR, EL -26 ft, 4 in. to EL 3 ft, 7 in. as shown in Figures 3.8.4-12 and 3L-35. Table 3.8.4-14 provides a summary of the provided reinforcing steel, reinforcement to concrete ratio in for each direction terms of a percentage, and the controlling loading case combination. This wall contains one zone and is chosen because it is a critical member to the seismic load path.

Critical Section 3 of the west PS/B is the north wall on column line JR between column lines 1R and 3R, EL -26 ft, 4 in. to EL 49 ft, 0 in. as shown in Figures 3.8.4-12, 3.8.4-13 and 3L-36. Table 3.8.4-16 provides a summary of the provided reinforcing steel, reinforcement to concrete ratio for each direction in terms of a percentage, and the controlling loading case combination. The thickness of this wall ranges from 40 in. to 50 in. and is divided into five zones:

Zone 1: from EL -26 ft, 4 in. to EL -14 ft, 2 in.;

Zone 2: from EL -14 ft, 2 in. to EL 3 ft, 7 in.;

Zone 3: from EL 3 ft, 7 in. to EL 24 ft, 2 in.;

Zone 4: from EL 24 ft, 2 in. to EL 39 ft, 6 in.; and

Zone 5: from EL 39 ft, 6 in. to EL 49 ft, 0 in.

This wall is chosen because it is a critical member to the seismic load path and serves as a representative wall junction between the west PS/B and the A/B.

Critical Area 1 of the west PS/B is the elevated slab between column lines 3R and 5R – KR and LR, EL 3 ft, 7 in. as shown in Figures 3.8.4-13 and 3L-37. Table 3.8.4-15 provides a summary of the provided reinforcing steel, reinforcement to concrete ratio for each direction in terms of a percentage, and the controlling loading case combination. This reinforced concrete slab is 32 in.-thick and is responsible for supporting the gas turbine generators necessary in the event of loss of station power.

See Figures 3.8.4-18 and 3.8.4-19 for illustration of the critical sections and area of the east PS/B. Refer to Figures 3L-38 through 3L-40 for isometric views of the east PS/B critical sections. The two critical sections and one critical area selected for the east PS/B are as follows:

Critical Section 1 of the east PS/B is the east exterior wall on column line 20R between column lines F1R and G4R, EL -26 ft, 4 in. to EL 39 ft, 6 in. as shown in Figures 3.8.4-18, 3.8.4-19, and 3L-38. Table 3.8.4-17 provides a summary of the provided reinforcing steel, reinforcement to concrete ratio for each direction in terms of a percentage, and the

controlling loading case combination. The thickness of this wall is 40 in. and is divided into four zones:

Zone 1: from EL -26 ft, 4 in. to EL -14 ft, 2 in.;

Zone 2: from EL -14 ft, 2 in. to EL 3 ft, 7 in.;

Zone 3: from EL 3 ft, 7 in. to EL 26 ft, 11 in.; and

Zone 4: from EL 26 ft, 11 in. to EL 39 ft, 6 in.

The shear wall at Critical Section 1 is chosen because it is a critical member to the seismic load path, receives lateral static and dynamic earth pressure, and a moderate thermal gradient.

Critical Section 2 of the east PS/B is the interior wall on column line K1R between column lines 18R and 20R, EL -26 ft, 4 in. to EL 3 ft, 7 in. as shown in Figures 3.8.4-18 and 3L-39. Table 3.8.4-18 provides a summary of the provided reinforcing steel, reinforcement to concrete ratio for each direction in terms of a percentage, and the controlling loading case combination. This wall is 40 in.-thick and contains one zone. This wall is chosen as a critical section because it is a critical member to the seismic load path.

Critical Area 1 of the east PS/B is the elevated slab between column lines 19R and 20R – G4R and JR, EL 3 ft, 7 in as shown in Figures 3.8.4-19 and 3L-40. Table 3.8.4-19 provides a summary of the provided reinforcing steel, reinforcement to concrete ratio for each direction in terms of a percentage, and the controlling loading case combination. This reinforced concrete slab is 32 in.-thick and is responsible for supporting the gas turbine generators necessary in the event of loss of station power.

3L.5.5 Essential Service Water Pipe Chase

Refer to Figures 3L-41 through 3L-43 for an isometric view of the ESWPC critical sections. Figures 3.8.4-24 through 3.8.4-26 provide details for vertical and horizontal reinforcing steel bar as well as transverse shear reinforcing steel for the ESWPC critical section walls and slabs. The two critical sections and one critical area selected for the ESWPC are as follows:

Critical Section 1 of the ESWPC is a south exterior longitudinal wall at column lines LR3 between column lines 1R and 13R as shown in Figures 3.8.4-23 and 3L-41. Table 3.8.4-20 provides a summary of the provided reinforcing steel, reinforcement to concrete ratio for each direction in terms of a percentage, and the controlling loading case combination. The results of the ACI 349-06 (Reference 3L-1) design evaluations for the ESWPC critical section shear walls and slabs are provided in Tables 3L-1 through 3L-5. This wall is divided into three zones:

Zone 1: from EL -26 ft, 4 in. to EL -15 ft, 8 in.;

Zone 2: from EL -15 ft, 8 in. to EL -9 ft, 8 in.; and

Zone 3: from EL -9 ft, 8 in. to EL 1 ft, 7 in.

The shear wall at Critical Section 1 is chosen because it receives significant lateral static and dynamic earth pressures. This wall also experiences passive earth pressures that result from sliding of the T/B against the R/B complex.

Critical Section 2 of the ESWPC is the exterior transverse wall at column line 19R3 between column lines LR and LR3 as shown in Figures 3.8.4-23 and 3L-42. Table 3.8.4-21 provides a summary of the provided reinforcing steel, reinforcement to concrete ratio for each direction in terms of a percentage, and the controlling loading case combination. This wall contains one zone: Zone 1: from EL -9 ft, 8 in. to EL 1 ft, 7 in. This wall is chosen because it receives lateral static and dynamic earth pressures. This wall experiences passive earth pressures that result from sliding of the T/B against the R/B complex.

Critical Area 1 of the ESWPC is the elevated slab between column lines 18R11 and 13R – LR3 and LR at EL -15 ft, 8 in. as shown in Figures 3.8.4-23 and 3L-43. Table 3.8.4-22 provides a summary of the provided reinforcing steel, reinforcement to concrete ratio for each direction in terms of a percentage, and the controlling loading case combination. This reinforced concrete slab is chosen because it is representative of a large portion of the ESWPC structure, and receives significant lateral static and dynamic earth pressures. This slab also experiences passive earth pressures that result from sliding of the T/B against the R/B complex. This slab is also responsible for supporting the earthen overburden and is vital to the performance of the essential service water pipe system.

3L.5.6 Basemat

Representative basemat sections that are deemed safety-critical and expected to experience large structural demands have been identified as the critical sections for the US-APWR design.

The R/B complex basemat reinforced concrete is designed based on the forces and bending moments retrieved directly from the ANSYS three-dimensional FE analysis output. The R/B complex basemat is cut into critical design sections. Design section cut locations and orientations are shown in Figures 3L-18 through 3L-22. Sub-section cuts are made along main section cuts at various points to evaluate the required reinforcing steel in each area and in each orthogonal direction of the basemat. Refer to Figure 3L-23 for a diagram of the relationship between main and parallel sub-section cuts. Section plane locations relative to the R/B complex basemat are shown in Figures 3L-20 through 3L-22. A summary of the resulting reinforcement design for the general design groups is provided in Table 3.8.5-4. A summary of the controlling design results (maximum DCRs) for the nine representative reinforcing groups is provided in Table 3L-14. All evaluations performed on the basemat are in accordance with ASME Section III, Division 2 (Reference 3L-3) code. It can be seen from a review of Table 3L-14 that the greatest demand to capacity ratios occur in Groups 6 and 6a under extreme and abnormal/ extreme loading conditions.

See Figures 3.8.5-11 through 3.8.5-13 for section details of the reinforcing steel configuration that is representative for the north-south, east-west and peripheral areas of the R/B complex basemat.

3L.5.7 Typical Reinforced Concrete Connections

There are a wide range of reinforced concrete connection configurations that occur in the R/B, A/B, east PS/B, west PS/B and ESWPC. Representative details of various slab to wall connections and wall to basemat connections found in the US-APWR standard plant are shown in Figures 3L-44 through 3L-49. Figure 3L-44 provides typical reinforcing bar configuration that will be utilized at the perimeter of the basemat foundation. Reinforcing steel design configurations, development length and lap splice lengths are designed in accordance with Chapter 12 of ACI 349-06 (Reference 3L-1). Fabrication of reinforcing steel bar hooks are designed in accordance with ACI 349-06 Section 7.1. Minimum bar bending radius are provided in accordance with ACI 349-06 Section 7.2. Minimum clear cover over reinforcing steel bars in connection configuration designs meet ACI 349-06 Section 7.7.1.

The figures provided are considered to be typical connection configurations that are replicated in numerous areas of the plant facility superstructure. Exact details of connection configuration may vary; final reinforcement configuration details are subject to changes necessary for fabrication and/or constructability.

In general, reinforcing bar sizes for beams, slabs, and tops of walls are maintained at or below #11 in order to maximize the provided tension development length l_{dh} required between interfacing reinforced concrete members. The interfacing concrete members (walls and basemat) are of sufficient thickness to facilitate required hook development from the slabs and/or other adjacent intersecting walls.

3L.6 References

3L-1 Code Requirements for Nuclear Safety-Related Concrete Structures (ACI 349-06) and Commentary, American Concrete Institute, 2006.

3L-2 Specification for the Design, Fabrication, and Erection of Steel Safety-Related Structures for Nuclear Facilities, ANSI/AISC N690-1994, Including Supplement 2 (2004), American National Standards Institute/American Institute of Steel Construction, 1994 & 2004.

3L-3 Rules for Construction of Nuclear Facility Components, Division 2, Concrete Containments, Section III, American Society of Mechanical Engineers, 2001 Edition through the 2003 Addenda.

3L-4 Rules for Construction of Nuclear Facility Components, Section III, Subsection NCA, General Requirements for Division 1 and Division 2, 2001 through 2003 Addenda.

3L-5 Rules for Construction of Nuclear Facility Components, Division 1, Section III, American Society of Mechanical Engineers, 2001 Edition through the 2003 Addenda.

3L-6 Specification for the Design, Fabrication and Erection of Structural Steel for Buildings, AISC ASD 8th Edition, American Institute of Steel Construction, 1978.

3L-7 Domestic Licensing of Production and Utilization Facilities, Energy, Title 10 Code of Federal Regulations Part 50, U.S. Nuclear Regulatory Commission, Washington, DC.

3L-8 Reevaluation of Regulatory Guidance on Modal Response Combination Methods for Seismic Response Spectrum Analysis, NUREG/CR-6645 Office of Nuclear Regulatory Research, U.S. Nuclear Regulatory Commission, 1999.

3L-9 ANSYS, Advanced Analysis Techniques Guide, Release 13.0, ANSYS Inc. 2010.

3L-10 Combining Modal Responses and Spatial Components in Seismic Response Analysis, RG 1.92, Revision 2, U.S. Nuclear Regulatory Commission, Washington, DC, July 2006.

3L-11 Seismic Analysis of Safety-Related Nuclear Structures and Commentary, American Society of Civil Engineers, ASCE 4-98,1998.

3L-12 Concrete Containment, Standard Review Plan for the Review of Safety Analysis Reports for Nuclear Power Plants. NUREG-0800, SRP 3.8.1, Revision 2 Nuclear Regulatory Commission, Washington D.C., March 2007.

3L-13 Concrete and Steel Internal Structures of Steel or Concrete Containments, NUREG-0800, SRP 3.8.3, Revision 2, Nuclear Regulatory Commission, Washington D.C., March 2007.

3L-14 Other Seismic Category I Structures, NUREG-0800, SRP 3.8.4, Revision 2, Nuclear Regulatory Commission, Washington D.C., March 2007.

3L-15 Foundations, NUREG-0800, SRP 3.8.5, Revision 2, Nuclear Regulatory Commission, Washington D.C., March 2007.

Table 3L-1 Shear Force Demand vs. Capacity for Walls (Sheet 1 of 4)

Building	Wall ID Number	Thick. (ft)	Length (ft)	Height (ft)	Shear Demand, V_u (kips)	Shear Strength, ϕV_n (kips)	Demand to Capacity Ratio, (V_u / ϕV_n)	Critical Section	Figure Ref. ID
Reactor Building	WRB_0081	3.33	115.58	8.50	11392	33342	0.34	CS1	SEC1_1
	WRB_0147	3.33	305.58	8.50	28954	88152	0.33	CS1	SEC1_1
	WRB_0261	3.33	160.59	9.50	21674	46325	0.47	CS1	SEC1_2
	WRB_0375	3.33	112.25	9.00	13612	32381	0.42	CS1	SEC1_2
	WRB_0515	3.33	156.50	8.50	25899	45147	0.57	CS1	SEC1_3
	WRB_0628	3.33	112.25	13.33	12635	32381	0.39	CS1	SEC1_3
	WRB_0754	2.67	150.34	10.17	19029	34702	0.55	CS1	SEC1_4
	WRB_0848	2.67	220.75	11.50	22691	50955	0.45	CS1	SEC1_4
	WRB_0950	2.33	162.25	10.09	10789	32762	0.33	CS1	SEC1_5
	WRB_1027	2.33	239.58	13.42	14148	48377	0.29	CS1	SEC1_6
	WRB_0020	3.67	58.83	8.50	3304	18672	0.18	CS2	SEC2_1
	WRB_0101	3.67	58.83	8.50	5159	18672	0.28	CS2	SEC2_1
	WRB_0188	4.33	168.67	9.50	38907	63254	0.62	CS2	SEC2_2
	WRB_0300	4.33	168.67	9.00	36458	63254	0.58	CS2	SEC2_2
	WRB_0421	3.33	40.50	8.50	5415	11683	0.46	CS2	SEC2_3
	WRB_0559	3.33	210.00	13.33	28358	60579	0.47	CS2	SEC2_3
	WRB_0670	3.33	53.29	10.17	7410	15373	0.48	CS2	SEC2_4
	WRB_0787	3.33	66.17	11.50	7165	19087	0.38	CS2	SEC2_4
	WRB_0880	3.33	45.08	10.09	3564	13005	0.27	CS2	SEC2_5
	WRB_0976	3.33	58.83	13.42	3681	16972	0.22	CS2	SEC2_6
	WRB_0377	7.75	79.83	8.50	17080	53549	0.32	CS3	SEC3_1
	WRB_0519	7.75	47.92	13.33	10471	32141	0.33	CS3	SEC3_1

Table 3L-1 Shear Force Demand vs. Capacity for Walls (Sheet 2 of 4)

Building	Wall ID Number	Thick. (ft)	Length (ft)	Height (ft)	Shear Demand, V_u (kips)	Shear Strength, ϕV_n (kips)	Demand to Capacity Ratio, (V_u / ϕV_n)	Critical Section	Figure Ref. ID
Reactor Building (Continued)	WRB_0631	7.75	79.83	10.17	17329	53549	0.32	CS3	SEC3_2
	WRB_0758	12.67	79.83	11.50	19213	87521	0.22	CS3	SEC3_3
	WRB_0035	5.00	210.00	8.50	29762	90877	0.33	CS4	SEC4_1
	WRB_0113	5.00	210.00	8.50	34124	90877	0.38	CS4	SEC4_1
	WRB_0203	5.00	168.67	9.50	30251	72991	0.41	CS4	SEC4_2
	WRB_0318	5.00	210.00	9.00	37685	90877	0.41	CS4	SEC4_2
	WRB_0441	5.00	210.00	8.50	38181	90877	0.42	CS4	SEC4_3
	WRB_0573	5.00	210.00	13.33	40420	90877	0.44	CS4	SEC4_3
	WRB_0687	5.00	87.17	10.17	15254	37721	0.40	CS4	SEC4_4
	WRB_0803	5.00	66.17	11.50	9608	28634	0.34	CS4	SEC4_4
	WRB_0894	5.00	66.17	10.09	5882	28634	0.21	CS4	SEC4_5
	WRB_0990	5.00	66.17	13.42	4950	28634	0.17	CS4	SEC4_5
	WRB_1043	5.00	66.17	14.08	5286	28634	0.18	CS4	SEC4_6
	WRB_0059	3.33	54.00	8.50	3650	15577	0.23	CS5	SEC5_1
	WRB_0129	3.33	66.00	8.50	4868	19039	0.26	CS5	SEC5_1
	WRB_0230	3.33	55.50	9.50	15244	16010	0.95	CS5	SEC5_2
	WRB_0346	3.33	78.67	9.00	18851	22693	0.83	CS5	SEC5_2
	WRB_0475	3.33	23.83	8.50	5606	6875	0.82	CS5	SEC5_3
	WRB_0476	3.33	18.75	8.50	5254	5409	0.97	CS5	SEC5_3
	WRB_0477	3.33	2.83	8.50	460	817	0.56	CS5	SEC5_3

Table 3L-1 Shear Force Demand vs. Capacity for Walls (Sheet 3 of 4)

Building	Wall ID Number	Thick. (ft)	Length (ft)	Height (ft)	Shear Demand, V_u (kips)	Shear Strength, ϕV_n (kips)	Demand to Capacity Ratio, (V_u / ϕV_n)	Critical Section	Figure Ref. ID
Reactor Building (Continued)	WRB_0478	3.33	6.75	8.50	1830	1947	0.94	CS5	SEC5_3
	WRB_0600	3.33	78.67	13.33	15253	22693	0.67	CS5	SEC5_3
	WRB_0719	3.33	66.00	10.17	12925	19039	0.68	CS5	SEC5_4
	WRB_0827	3.33	80.75	11.50	12791	23294	0.55	CS5	SEC5_4
	WRB_0915	3.33	66.00	10.09	9985	19039	0.52	CS5	SEC5_5
	WRB_1006	3.33	90.92	13.42	7973	26227	0.30	CS5	SEC5_5
	WRB_1060	3.33	80.75	14.08	7655	23294	0.33	CS5	SEC5_6

Table 3L-1 Shear Force Demand vs. Capacity for Walls (Sheet 4 of 4)

Building	Wall ID Number	Thick. (ft)	Length (ft)	Height (ft)	Shear Demand, V_u (kips)	Shear Strength, ϕV_n (kips)	Demand to Capacity Ratio, (V_u / ϕV_n)	Critical Section
East Power Source Building	WPE_16	3.33	79.83	8.50	7797	18424	0.42	CS1
	WPE_83	3.33	145.83	3.50	11573	33655	0.34	CS1
	WPE_129	3.33	145.83	22.67	7912	33655	0.24	CS1
	WPE_159	3.33	145.83	13.63	6228	33655	0.19	CS1
	WPE_38	3.33	53.33	10.75	5308	12308	0.43	CS2
	WPE_107	3.33	66.00	3.50	5359	15231	0.35	CS2
West Power Source Building	WPW_30	3.33	133.67	11.83	14756	30848	0.48	CS1
	WPW_83	3.33	133.67	8.58	14335	30848	0.46	CS1
	WPW_96	3.33	133.67	20.96	13077	30848	0.42	CS1
	WPW_126	3.33	104.67	15.33	5874	24155	0.24	CS1
	WPW_150	1.75	41.17	7.29	974	4988	0.20	CS1
	WPW_17	1.67	54.00	11.83	3308	6233	0.53	CS2
	WPW_67	1.67	54.00	17.08	2974	6233	0.48	CS2
	WPW_22	4.17	36.00	11.83	5589	10387	0.54	CS3
	WPW_72	4.17	36.00	17.08	4633	10387	0.45	CS3
	WPW_94	4.17	41.17	20.96	5306	11878	0.45	CS3
	WPW_114	3.33	104.67	4.92	12893	24155	0.53	CS3
	WPW_140	3.33	133.67	9.63	12824	30848	0.42	CS3
Essential Service Water Pipe Chase	WBLR32	3.00	178.67	10.75	5321	37113	0.14	CS1
	W1FLR31	3.00	47.00	4.58	2404	9763	0.25	CS1
	W2FLR31	3.00	12.67	10.92	379	2631	0.14	CS1
	W2F19R31	2.00	25.83	10.92	1171	3577	0.33	CS2

Table 3L-2 Required Reinforcing Steel for Walls (Sheet 1 of 2)

Building	Wall ID Number	Wall Thickness (ft)	Cover Depth, d' (in)	Required Axial-Flexural plus In-Plane Reinforcing Steel (in^2 / ft)				Provided Reinforcing Steel, (in^2 / ft) (N.F. = North Face, W.F. = West Face, etc.)				
				Horizontal (X-Top) N.F./W.F.	Horizontal (X-Bot.) S.F/E.F.	Vertical (Y-Top) N.F./W.F.	Vertical (Y-Bot.) S.F./E.F.	Horizontal (X-Top) N.F./W.F.	Horizontal (X-Bot.) S.F/E.F.	Vertical (Y-Top) N.F./W.F.	Vertical (Y-Bot.) S.F./E.F.	Critical Section
Reactor Building	SEC1_1	3.33	7.19	1.51	1.46	1.46	1.46	3.12	2.83	3.12	2.83	CS1
	SEC1_2	3.33	7.19	2.48	2.48	2.48	2.48	3.12	2.83	3.12	2.83	CS1
	SEC1_3	2.67	7.19	2.48	2.48	2.48	2.48	3.12	2.83	3.12	2.83	CS1
	SEC1_4	2.67	7.19	1.99	1.30	1.63	1.13	3.12	1.56	2.56	1.56	CS1
	SEC1_5	2.33	7.19	1.99	1.30	2.31	1.46	3.12	1.56	2.56	1.56	CS1
	SEC2_1	3.67	7.19	3.88	3.45	1.54	1.49	4.68	4.68	4.68	4.68	CS2
	SEC2_2	4.33	7.19	3.88	3.22	2.94	2.51	4.68	4.68	4.68	4.68	CS2
	SEC2_3	3.33	7.19	2.31	2.06	2.94	1.87	4.12	4.12	4.12	4.12	CS2
	SEC2_4	3.33	7.19	2.31	2.06	2.42	1.49	2.56	2.56	2.56	2.56	CS2
	SEC2_5	3.33	7.19	2.31	2.06	1.89	1.49	2.56	2.56	2.56	2.56	CS2
	SEC2_6	0.33	7.19	2.31	2.06	1.89	1.49	2.56	2.56	2.56	2.56	CS2
	SEC3_1	7.75	8.18	6.10	1.84	8.38	2.82	9.00	4.50	9.00	4.50	CS3
	SEC3_2	7.75	8.18	6.81	1.84	7.94	2.18	9.00	4.50	9.00	4.50	CS3
	SEC3_3	12.67	8.18	10.34	2.74	6.19	2.82	13.50	4.50	6.75	4.50	CS3
	SEC4_1	5.00	7.19	2.65	3.03	3.79	4.41	3.12	6.24	4.68	6.24	CS4
	SEC4_2	5.00	7.19	2.65	3.03	3.79	4.92	3.12	6.24	4.68	6.24	CS4
	SEC4_3	5.00	7.19	2.65	3.42	2.76	4.15	3.12	4.68	3.12	6.24	CS4
	SEC4_4	5.00	7.19	2.65	3.62	2.76	3.90	3.12	4.68	3.12	6.24	CS4
	SEC4_5	5.00	7.19	2.65	4.02	2.76	2.88	3.12	4.68	3.12	4.68	CS4
	SEC4_6	5.00	7.19	2.85	4.42	2.76	2.88	4.68	6.24	3.12	4.68	CS4
	SEC5_1	3.33	7.19	1.96	1.95	2.87	2.81	4.68	4.68	4.68	4.68	CS5
	SEC5_2	3.33	7.19	4.33	3.71	3.99	3.89	4.68	4.68	4.68	4.68	CS5
	SEC5_3	3.33	7.19	3.72	3.71	3.99	4.25	4.68	4.68	4.68	4.68	CS5
	SEC5_4	3.33	7.19	1.96	1.95	2.87	2.45	4.68	4.68	4.68	4.68	CS5
	SEC5_5	3.33	7.19	2.55	2.54	2.87	1.73	3.72	3.72	3.72	3.72	CS5
	SEC5_6	3.33	7.19	1.96	1.95	3.24	3.17	3.72	3.72	3.72	3.72	CS5

Table 3L-2 Required Reinforcing Steel for Walls (Sheet 2 of 2)

Building	Wall ID Number	Wall Thickness (ft)	Cover Depth, d' (in)	Required Axial-Flexural plus In-Plane Reinforcing Steel (in^2 / ft)				Provided Reinforcing Steel, (in^2 / ft) (N.F. = North Face, W.F. = West Face, etc.)				
				Horizontal (X-Top) N.F./W.F.	Horizontal (X-Bot.) S.F/E.F.	Vertical (Y-Top) N.F./W.F.	Vertical (Y-Bot.) S.F./E.F.	Horizontal (X-Top) N.F./W.F.	Horizontal (X-Bot.) S.F/E.F.	Vertical (Y-Top) N.F./W.F.	Vertical (Y-Bot.) S.F./E.F.	Critical Section
East Power Source Building	WPE_16	3.33	4.25	1.37	1.46	1.49	1.69	2.00	2.00	2.00	2.00	CS1
	WPE_83	3.33	4.25	1.75	1.46	1.47	1.68	2.00	2.00	2.00	2.00	CS1
	WPE_159	3.33	4.25	1.46	2.03	1.37	1.67	1.56	3.12	2.00	2.00	CS1
	WPE_129	3.33	4.75	1.37	1.91	1.37	1.75	1.56	3.12	2.00	2.00	CS1
	WPE_38	3.33	4.00	1.75	1.66	1.64	1.37	3.12	3.12	3.12	3.12	CS2
	WPE_107	3.33	4.00	2.78	2.68	1.48	2.36	3.12	3.12	3.12	3.12	CS2
West Power Source Building	WPW_30	3.33	4.25	1.37	1.72	1.87	1.97	1.56	2.00	3.12	3.12	CS1
	WPW_83	3.33	4.25	1.89	2.35	1.52	2.02	3.12	3.12	3.12	3.12	CS1
	WPW_96	3.33	4.75	1.46	1.96	1.46	2.24	3.12	3.12	3.12	3.12	CS1
	WPW_126	3.33	4.25	1.51	1.98	1.37	1.72	2.00	3.12	2.00	2.00	CS1
	WPW_150	1.75	4.00	0.72	1.05	0.72	1.21	1.00	2.00	2.00	2.00	CS1
	WPW_17	1.67	3.50	1.58	1.50	0.97	0.87	2.54	2.54	2.00	2.00	CS2
	WPW_67	1.67	3.50	2.18	2.08	0.89	0.83	2.54	2.54	2.00	2.00	CS2
	WPW_22	4.17	4.25	2.67	1.87	2.33	1.93	3.12	3.12	3.12	3.12	CS3
	WPW_72	4.17	4.75	2.59	2.05	1.99	2.17	3.12	3.12	3.12	3.12	CS3
	WPW_94	4.17	4.25	1.83	1.83	1.83	1.83	3.12	3.12	3.12	3.12	CS3
	WPW_114	3.33	4.25	1.61	1.37	1.61	1.37	2.00	2.00	2.00	2.00	CS3
	WPW_140	3.33	4.00	1.47	1.44	1.46	1.46	2.00	2.00	2.00	2.00	CS3
Essential Service Water Pipe Chase	WBLR32	3.00	4.25	2.61	2.75	2.69	2.51	3.12	3.12	3.12	3.12	CS1
	W1FLR31	3.00	4.25	2.06	2.23	2.72	2.22	3.12	3.12	3.12	3.12	CS1
	W2FLR31	3.00	4.25	1.23	1.61	1.02	1.49	2.00	2.00	2.00	2.00	CS1
	W2F19R31	2.00	4.25	2.41	1.12	2.56	1.61	3.12	3.12	3.12	3.12	CS2

Table 3L-3 Required Transverse Shear Reinforcing Steel for Walls (Sheet 1 of 2)

Building	Wall ID Number	Thick. (ft)	Required Trans v. Shear Area (in^2/ft^2)	Provided Transv. Shear Area (in^2/ft^2)	General Location of Transverse Reinforcement	Critical Section
Reactor Building	SEC1_1	3.33	0.00	Not Req'd.	Not Req'd.	CS1
	SEC1_2	3.33	0.07	0.31	Localized Area(s)	CS1
	SEC1_3	2.67	0.17	0.31	Localized Area(s)	CS1
	SEC1_4	2.67	0.17	0.31	Localized Area(s)	CS1
	SEC1_5	2.33	0.15	0.31	Localized Area(s)	CS1
	SEC2_1	3.67	0.44	0.44	Localized Area(s)	CS2
	SEC2_2	4.33	0.28	0.31	Localized Area(s)	CS2
	SEC2_3	3.33	0.18	0.31	Localized Area(s)	CS2
	SEC2_4	3.33	0.00	Not Req'd.	Not Req'd.	CS2
	SEC2_5	3.33	0.00	Not Req'd.	Not Req'd.	CS2
	SEC2_6	0.33	0.00	Not Req'd.	Not Req'd.	CS2
	SEC3_1	7.75	0.00	Not Req'd.	Not Req'd.	CS3
	SEC3_2	7.75	0.00	Not Req'd.	Not Req'd.	CS3
	SEC3_3	12.67	0.00	Not Req'd.	Not Req'd.	CS3
	SEC4_1	5.00	0.28	0.31	Localized Area(s)	CS4
	SEC4_2	5.00	0.19	0.31	Localized Area(s)	CS4
	SEC4_3	5.00	0.00	0.31	Localized Area(s)	CS4
	SEC4_4	5.00	0.00	0.31	Localized Area(s)	CS4
	SEC4_5	5.00	0.02	0.62	Localized Area(s)	CS4
	SEC4_6	5.00	0.02	0.62	Localized Area(s)	CS4
	SEC5_1	3.33	0.13	0.31	Localized Area(s)	CS5
	SEC5_2	3.33	0.11	0.31	Localized Area(s)	CS5
	SEC5_3	3.33	0.07	0.31	Localized Area(s)	CS5
	SEC5_4	3.33	0.01	0.31	Localized Area(s)	CS5
	SEC5_5	3.33	0.18	0.31	Localized Area(s)	CS5
	SEC5_6	3.33	0.08	0.31	Localized Area(s)	CS5

Table 3L-3 Required Transverse Shear Reinforcing Steel for Walls (Sheet 2 of 2)

Building	Wall ID Number	Thick. (ft)	Required Trans v. Shear Area (in^2/ft^2)	Provided Transv. Shear Area (in^2/ft^2)	General Location of Transverse Reinforcement	Critical Section
West Power Source Building	WPW_30	3.33	0.03	0.20	Localized Area(s)	CS1
	WPW_83	3.33	0.15	0.20	Localized Area(s)	CS1
	WPW_96	3.33	0.07	0.20	Localized Area(s)	CS1
	WPW_126	3.33	0.00	Not Req'd.	Not Req'd.	CS1
	WPW_150	1.75	0.00	Not Req'd.	Not Req'd.	CS1
	WPW_17	1.67	0.02	0.27	Localized Area(s)	CS2
	WPW_67	1.67	0.03	0.27	Localized Area(s)	CS2
	WPW_22	4.17	0.07	0.20	Localized Area(s)	CS3
	WPW_72	4.17	0.00	Not Req'd.	Not Req'd.	CS3
	WPW_94	4.17	0.00	Not Req'd.	Not Req'd.	CS3
	WPW_114	3.33	0.10	0.20	Localized Area(s)	CS3
	WPW_140	3.33	0.00	Not Req'd.	Not Req'd.	CS3
East Power Source Building	WPE_16	3.33	0.26	0.27	Localized Area(s)	CS1
	WPE_83	3.33	0.12	0.20	Localized Area(s)	CS1
	WPE_129	3.33	0.00	Not Req'd.	Not Req'd.	CS1
	WPE_159	3.33	0.00	Not Req'd.	Not Req'd.	CS1
	WPE_38	3.33	0.00	Not Req'd.	Not Req'd.	CS2
	WPE_107	3.33	0.00	Not Req'd.	Not Req'd.	CS2
Essential Service Water Pipe Chase	WBLR32	3.00	1.15	1.20	Entire Wall	CS1
	W1FLR31	3.00	0.50	0.60	Entire Wall	CS1
	W2FLR31	3.00	0.00	Not Req'd.	Not Req'd.	CS1
	W2F19R31	2.00	0.42	0.44	Localized Area(s)	CS2

Table 3L-4 Required Reinforcing Steel for Critical Areas (Slabs)

Building	Slab ID Number	Slab Thickness, t (in)	Required Rebar Area, (in^2/ft)				Rebar Provided, (in^2/ft)		Critical Area (Slab)
			Top (X-direction)	Bot. (X-direction)	Top (Y-direction)	Bot. (Y-direction)	Top (Both Directions)	Bottom (Both Directions)	
Reactor Building	SRB_0100	126.00	3.57	4.49	3.57	4.43	4.68	4.68	CA3
	SRB_0174	52.00	4.30	2.48	3.24	2.31	4.50	4.50	CA4
West Power Source Building	SPW_10	32.00	1.27	1.19	1.19	0.97	1.56	1.56	CA1
East Power Source Building	SPE_21	32.00	0.85	0.89	0.85	0.89	1.00	1.00	CA1
Essential Service Water Pipe Chase	S1F3	24.00	2.95	2.58	2.52	2.56	3.12	3.12	CA1

Table 3L-5 Required Transverse Reinforcing Steel for Critical Areas (Slabs)

Building	Slab ID Number	Slab Thickness, t (in.)	Bot Clear, (in.)	Top Clear, (in.)	Required Transv. Shear Area (in^2/ft^2)	Provided Transv. Shear Area (in^2/ft^2)	General Extents of Transverse Reinforcement	Critical Area (Slab)
Reactor Building	SRB_0100	126.00	5.70	5.70	0.00	Not Req'd	Not Req'd	CA3
	SRB_0174	52.00	5.94	5.94	0.38	0.44	Localized Area(s)	CA4
West Power Source Building	SPW_10	32.00	3.00	2.50	0.03	0.11	Localized Area(s)	CA1
East Power Source Building	SPE_21	32.00	3.00	2.50	0.47	0.62	Localized Area(s)	CA1
Essential Service Water Pipe Chase	S1F3	24.00	3.00	4.00	1.06	1.20	Entire Slab	CA1

Table 3L-6 PCCV Cylinder Reinforcement Schedule

Cylinder Reinforcement						
Elevation Range	Meridional			Hoop		Shear Ties
	Layer	Outside	Inside	Outside	Inside	
3'-7" to 11'-10"	Layer 1 Layer 2	4 - #18 @ 2° 4 - #11 @ 2°	4 - #18 @ 2° 4 - #11 @ 2°	#18 @ 9"	#18 @ 9"	2 - #5 @ 9" x 8 @ 4°
11'-10" to 27'-11"	Layer 1 Layer 2	4 - #18 @ 2° 4 - #11 @ 2°	4 - #18 @ 2° 4 - #11 @ 2°	#18 @ 9"	#18 @ 9"	2 - #5 @ 18" x 6 @ 4°
27'-11" to 51'-11"	Layer 1 Layer 2	4 - #18 @ 2° 4 - #11 @ 2°	4 - #18 @ 2° 4 - #11 @ 2°	#14 @ 9"	#14 @ 9"	#5 @ 18" x 6 @ 4°
51'-11" to 99'-11"	Layer 1	4 - #11 @ 2°	4 - #11 @ 2°	#14 @ 9"	#14 @ 9"	#5 @ 18" x 6 @ 4°
99'-11" to 153'-9"	Layer 1	4 - #11 @ 2°	4 - #11 @ 2°	#18 @ 9"	#14 @ 9"	#5 @ 18" x 6 @ 4°

Table 3L-7 PCCV Dome Reinforcement Schedule

Dome Reinforcement					
Elevation Range	Meridional		Hoop		Shear Ties
	Outside	Inside	Outside	Inside	
0° to 25°	4 - #11 @ 2°	4 - #11 @ 2°	5 - #18 @ 2.5°	5 - #14 @ 2.5°	#5 @ 10" each way
25° to 45°	4 - #11 @ 4°	4 - #11 @ 4°	5 - #18 @ 2.5°	5 - #11 @ 2.5°	#5 @ 10" each way
45° to 50°	4 - #11 @ 4°	4 - #11 @ 4°	5 - #18 @ 2.5°	5 - #11 @ 2.5°	#5 @ 10" each way
50° to 65°	4 - #10 @ 4°	4 - #10 @ 4°	4 - #10 @ 2°	4 - #10 @ 2°	#5 @ 11" each way
65° to 80°	4 - #10 @ 8°	4 - #10 @ 8°	3 - #10 @ 2°	3 - #10 @ 2°	#5 @ 11" each way
80° to 86.5°	#10 @ 7" - @ 12"	#10 @ 7" - @ 12"	3 - #10 @ 2°	3 - #10 @ 2°	#5 @ 11" each way
86.5° to 90°	#10 @ 6" - @ 7"	#10 @ 6" - @ 7"	-	-	#5 @ 11" each way

Table 3L-8 Equipment Hatch Reinforcement Schedule

		Outside Rebar		Inside Rebar		Ring Steel	
Group	Direction	Layer 1	Layer 2	Layer 1	Layer 2	Outside	Inside
EH-1 and EH-3	Hoop	#18@9"	#18@9"	#18@9"	#11@9"	----	2 layers of 4-#18@9"
	Meridional	4-#18@2°	-----	4-#18@2°	-----	----	----
EH-2 and EH-4	Hoop	#18@9"	----	#18@9"	----	----	----
	Meridional	4-#18@2°	4-#18@2°	4-#18@2°	4-#18@2°	----	2 layers of 4-#18@9"

Table 3L-9 Airlock 1 Reinforcement Schedule

		Outside Rebar		Inside Rebar		Ring Steel	
Group	Direction	Layer 1	Layer 2	Layer 1	Layer 2	Outside	Inside
AL-1 and AL-3	Hoop	#18@9"	#18@9"	#18@9"	#18@9"	----	2 layers of 3-#18@9"
	Meridional	4-#18@2°	4-#18@2°	4-#18@2°	4-#11@2°	----	----
AL-2 and AL-4	Hoop	#18@9"	----	#18@9"	----	----	----
	Meridional	4-#18@2°	4-#18@2°	4-#18@2°	4-#18@2°	----	2 layers of 3-#18@9"

Table 3L-10 Airlock 2 Reinforcement Schedule

		Outside Rebar		Inside Rebar		Ring Steel	
Group	Direction	Layer 1	Layer 2	Layer 1	Layer 2	Outside	Inside
AL-5 and AL-7	Hoop	#18@9"	#18@9"	#18@9"	#11@9"	----	2 layers of 3-#18@9"
	Meridional	4-#18@2°	----	4-#18@2°	-----	----	----
AL-6 and AL-8	Hoop	#18@9"	----	#18@9"	----	----	----
	Meridional	4-#18@2°	----	4-#18@2°	4-#11@4°	----	2 layers of 3-#18@9"

Table 3L-11 Demand to Capacity Ratios for Cylinder and Dome Evaluations (Sheet 1 of 2)

Group #	Maximum Demand Capacity Ratio (DCR)											Limit of Shear Rebar Ratio			
	Primary					Primary + Secondary									
	Membrane		Membrane + Bending			Membrane		Membrane + Bending				Tangential Rebar		Radial	
	f'c	S	f'c	So	Si	f'c	S	f'c	So	Si	S_tie	DCR	Limit	Space	Rebar
1	0.56	0.53	0.42	0.49	0.25	0.44	0.53	0.72	0.94	0.35	0.00	0.00	0.00	0.69	0.00
2	0.57	0.55	0.43	0.50	0.26	0.44	0.55	0.73	1.00	0.36	0.00	0.00	0.00	0.69	0.00
3	0.56	0.53	0.42	0.49	0.47	0.44	0.53	0.73	0.92	0.72	0.00	0.00	0.00	0.69	0.00
4	0.58	0.56	0.45	0.25	0.52	0.46	0.56	0.77	0.87	0.89	0.00	0.00	0.00	0.69	0.00
5	0.65	0.62	0.51	0.28	0.58	0.51	0.63	0.82	0.85	0.97	0.00	0.00	0.00	0.69	0.00
6	0.64	0.60	0.50	0.32	0.57	0.50	0.61	0.84	0.99	0.98	0.00	0.32	0.34	0.69	0.00
7	0.69	0.63	0.50	0.57	0.31	0.54	0.64	0.84	0.81	0.48	0.00	0.00	0.00	0.86	0.00
8	0.78	0.71	0.57	0.66	0.34	0.61	0.72	0.87	0.82	0.54	0.00	0.11	0.63	0.86	0.00
9	0.78	0.73	0.58	0.68	0.35	0.61	0.73	0.79	0.76	0.43	0.00	0.67	0.75	0.86	0.00
10	0.79	0.74	0.59	0.69	0.51	0.62	0.74	0.78	0.74	0.73	0.00	0.95	0.80	0.86	0.00
11	0.78	0.73	0.60	0.69	0.37	0.61	0.73	0.84	0.71	0.38	0.00	0.50	0.85	0.86	0.00
12	0.56	0.47	0.51	0.54	0.35	0.50	0.52	0.90	0.64	0.40	0.00	0.46	0.85	0.86	0.00
13	0.58	0.47	0.68	0.65	0.65	0.52	0.52	0.76	0.68	0.80	0.64	0.61	0.82	0.43	0.48
14	0.59	0.47	0.87	0.86	0.78	0.52	0.52	0.76	0.75	0.89	0.00	0.60	0.80	0.43	0.00
15	0.80	0.77	0.64	0.73	0.34	0.62	0.77	0.84	0.75	0.44	0.42	0.00	0.00	0.69	0.05
16	0.85	0.81	0.77	0.86	0.33	0.66	0.81	0.82	0.68	0.45	0.00	0.00	0.00	0.69	0.00

Table 3L-11 Demand to Capacity Ratios for Cylinder and Dome Evaluations (Sheet 2 of 2)

Group	Final DCR	Direction	Load Case
1	0.94	Meridional	LCC08
2	1.00	Hoop	LCC08
3	0.92	Meridional	LCC08
4	0.89	Meridional	LCC03
5	0.97	Meridional	LCC03
6	0.99	Hoop	LCC08
7	0.86	Meridional	All LCCs
8	0.87	Hoop	LCC03
9	0.86	Meridional	All LCCs
10	0.86	Meridional	All LCCs
11	0.86	Meridional	All LCCs
12	0.90	Meridional	LCC13
13	0.82	Hoop & Meridional	LCC05 & LCC12
14	0.89	Meridional	LCC03
15	0.84	Meridional	LCC03
16	0.86	Meridional	LCC02

Summary of Controlling Loading Conditions

Notes:

1. Loading Case Combinations:

LCC01 – Test	LCC02 – Construction	LCC03 – Normal	LCC04 – Extreme
LCC05 – Extreme	LCC06 – Extreme	LCC08 – Abnormal	LCC09 – Abnormal/Extreme
LCC10 – Abnormal/Extreme	LCC11 – Abnormal/Extreme	LCC12 – Abnormal/Extreme	

2. Symbols: f'c = Concrete Compression DCR, S = Reinforcing Steel DCR, Si = Inside Reinforcing Steel DCR, So = Outside Face Reinforcing DCR and S_tie = Shear Tie DCR

Table 3L-12 Demand to Capacity Ratios for Buttress Evaluations (Sheet 1 of 2)

Group #	Maximum Demand Capacity Ratio (DCR)											Limit of Shear Rebar Ratio			
	Primary					Primary + Secondary									
	Membrane		Membrane + Bending			Membrane		Membrane + Bending				Tangential Rebar		Radial	
	f'c	S	f'c	So	Si	f'c	S	f'c	So	Si	S_tie	DCR	Limit	Space	Rebar
B1-A	0.58	0.54	0.44	0.25	0.51	0.45	0.54	0.76	0.96	0.87	0.00	0.00	0.00	0.60	0.00
B1-B	0.39	0.38	0.38	0.43	0.67	0.32	0.39	0.66	0.65	0.31	0.17	0.00	0.00	0.50	0.08
B2-A1	0.77	0.71	0.56	0.65	0.34	0.60	0.71	0.89	0.91	0.53	0.00	0.29	0.72	0.86	0.00
B2-A2	0.59	0.54	0.43	0.50	0.39	0.46	0.55	0.82	1.00	0.41	0.00	0.00	0.00	0.86	0.00
B2-B	0.47	0.46	0.48	0.54	0.68	0.38	0.47	0.57	0.58	0.29	0.03	0.00	0.00	0.20	0.02
B3-A	0.79	0.74	0.58	0.36	0.91	0.64	0.78	0.89	0.97	0.98	0.00	0.85	0.91	0.86	0.00
B3-B	0.58	0.56	0.55	0.63	0.79	0.45	0.56	0.74	0.82	0.46	0.03	0.00	0.00	0.20	0.03
B4-A1	0.78	0.73	0.58	0.68	0.35	0.61	0.73	0.82	0.97	0.48	0.00	0.58	0.92	0.86	0.00
B4-A2	0.77	0.72	0.57	0.67	0.41	0.60	0.72	0.83	1.00	0.48	0.00	0.52	0.89	0.86	0.00
B4-B	0.58	0.56	0.59	0.64	0.59	0.45	0.56	0.84	0.82	0.32	0.00	0.33	0.47	0.21	0.00
B5-A	0.58	0.52	0.50	0.53	0.25	0.45	0.52	0.90	0.79	0.38	0.09	0.42	0.91	0.86	0.03
B5-B	0.52	0.47	0.61	0.66	0.34	0.42	0.47	0.89	0.93	0.33	0.06	0.48	0.50	0.21	0.06
B6-A	0.58	0.50	0.42	0.44	0.48	0.45	0.50	0.88	0.82	0.76	0.21	0.55	0.87	0.40	0.18
B6-B	0.53	0.54	0.48	0.51	0.59	0.43	0.54	0.91	0.98	0.38	0.43	0.63	0.54	0.21	0.20

Table 3L-12 Demand to Capacity Ratios for Buttress Evaluations (Sheet 2 of 2)

Group	Final DCR	Direction	Load Case
B1-A	0.96	Meridional	LCC2
B1-B	0.67	Meridional	LCC2
B2-A1	0.91	Hoop	LCC2
B2-A2	1.00	Hoop	LCC2
B2-B	0.68	Hoop	LCC2
B3-A	0.98	Hoop	LCC2
B3-B	0.82	Hoop	LCC2
B4-A1	0.97	Hoop	LCC2
B4-A2	1.00	Hoop	LCC2
B4-B	0.84	Hoop	LCC2
B5-A	0.91	Hoop	LCC2
B5-B	0.93	Meridional	LCC6
B6-A	0.88	Meridional	LCC2
B6-B	0.98	Meridional	LCC6

Summary of Controlling Loading Conditions

Notes:

1. Loading Case Combinations:

LCC01 – Test	LCC02 – Construction	LCC03 – Normal	LCC04 – Extreme
LCC05 – Extreme	LCC06 – Extreme	LCC08 – Abnormal	LCC09 – Abnormal/Extreme
LCC10 – Abnormal/Extreme	LCC11 – Abnormal/Extreme	LCC12 – Abnormal/Extreme	

2. Symbols: f'c = Concrete Compression DCR, S = Reinforcing Steel DCR, Si = Inside Reinforcing Steel DCR, So = Outside Face Reinforcing DCR and S_tie = Shear Tie DCR

Table 3L-13 Demand to Capacity Ratios for Equipment Hatch and Airlock Evaluations (Sheet 1 of 2)

Group #	Maximum Demand Capacity Ratio (DCR)											Limit of Shear Rebar Ratio			
	Primary					Primary + Secondary									
	Membrane		Membrane + Bending			Membrane		Membrane + Bending				Tangential Rebar		Radial	
	f'c	S	f'c	So	Si	f'c	S	f'c	So	Si	S_tie	DCR	Limit	Space	Rebar
EH-1	0.68	0.62	0.99	0.77	0.50	0.59	0.69	0.77	0.80	0.49	0.11	0.84	0.38	0.33	0.02
EH-2	0.69	0.60	0.52	0.60	0.43	0.57	0.64	0.86	0.78	0.81	0.22	0.81	0.60	0.48	0.06
EH-3	0.70	0.63	1.00	0.78	0.45	0.54	0.63	0.73	0.77	0.44	0.00	0.95	0.45	0.33	0.00
EH-4	0.68	0.60	0.52	0.60	0.43	0.58	0.64	0.87	0.75	0.81	0.10	0.85	0.63	0.48	0.03
AL-1	0.70	0.60	0.62	0.66	0.26	0.54	0.60	0.42	0.61	0.29	0.00	0.38	0.76	0.61	0.00
AL-2	0.54	0.44	0.54	0.54	0.21	0.47	0.47	0.76	0.51	0.34	0.53	0.56	0.77	0.65	0.08
AL-3	0.42	0.36	0.41	0.42	0.23	0.34	0.37	0.51	0.41	0.22	0.94	0.48	0.81	0.64	0.13
AL-4	0.52	0.41	0.50	0.50	0.23	0.45	0.45	0.77	0.51	0.33	0.44	0.70	0.87	0.66	0.06
AL-5	0.69	0.60	0.65	0.68	0.24	0.55	0.62	0.48	0.61	0.34	0.00	0.47	0.70	0.62	0.00
AL-6	0.52	0.46	0.42	0.48	0.22	0.47	0.54	0.71	0.56	0.39	0.00	0.59	0.78	0.69	0.00
AL-7	0.72	0.63	0.68	0.72	0.25	0.56	0.63	0.48	0.63	0.32	0.00	0.57	0.79	0.64	0.00
AL-8	0.57	0.50	0.46	0.52	0.24	0.46	0.53	0.70	0.55	0.35	0.00	0.59	0.76	0.69	0.00

Table 3L-13 Demand to Capacity Ratios for Equipment Hatch and Airlock Evaluations (Sheet 2 of 2)

Group	Final DCR	Direction	Load Case
EH-1	0.99	Hoop	LCC02
EH-2	0.86	Meridional	LCC02
EH-3	1.00	Hoop	LCC02
EH-4	0.87	Meridional	LCC02
AL-1	0.76	Hoop	LCC02
AL-2	0.77	Meridional	LCC06
AL-3	0.94	Hoop	LCC02
AL-4	0.87	Meridional	LCC07
AL-5	0.70	Hoop	LCC02
AL-6	0.78	Hoop	LCC02
AL-7	0.79	Hoop	LCC02
AL-8	0.76	Meridional	LCC02

Summary of Controlling Loading Conditions

Notes:

1. Loading Case Combinations:

LCC01 – Test	LCC02 – Construction	LCC03 – Normal	LCC04 – Extreme
LCC05 – Extreme	LCC06 – Extreme	LCC08 – Abnormal	LCC09 – Abnormal/Extreme
LCC10 – Abnormal/Extreme	LCC11 – Abnormal/Extreme	LCC12 – Abnormal/Extreme	

2. Symbols: f'c = Concrete Compression DCR, S = Reinforcing Steel DCR, Si = Inside Reinforcing Steel DCR, So = Outside Face Reinforcing DCR and S_tie = Shear Tie DCR

Table 3L-14 Demand to Capacity Ratios for Basemat Evaluations

Main Section Cut: Maximum Demand to Capacity Ratio								
Group (4)	S	Load Case (2)	So	Load Case (2)	Si	Load Case (2)	Stie	Load Case (2)
1	0.31	LCC02S1W	0.46	LCC04S6S	0.39	LCC11S6W	0.10	LCC04S6S
2	0.32	LCC02S1S	0.33	LCC03S1W	0.46	LCC05S1S	0.76	LCC09S6W
3	0.40	LCC01S1S	0.66	LCC01S1S	0.33	LCC11S6W	0.26	LCC09S6S
4	0.27	LCC01S1S	0.67	LCC01S1S	0.31	LCC11S6W	0.46	LCC01S1S
5	0.15	LCC04S1S	0.49	LCC04S1S	0.30	LCC02S1W	0.76	LCC09S6S
5a	0.13	LCC09S1S	0.47	LCC02S1S	0.30	LCC02S1W	0.41	LCC01S1S
6	0.69	LCC04S1S	0.93	LCC04S1S	0.86	LCC05S1W	0.80	LCC03S1S
6a	0.22	LCC04S1S	0.63	LCC09S6S	0.98	LCC04S1S	0.44	LCC09S6W
6b	0.35	LCC02S1S	0.65	LCC02S1S	0.25	LCC11S6S	0.60	LCC09S6S

Parallel Section Cut: Maximum Demand to Capacity Ratio								
Group (4)	S	Load Case (2)	So	Load Case (2)	Si	Load Case (2)	Stie	Load Case (2)
1	0.46	LCC02S1W	0.50	LCC09S6S	0.68	LCC02S1W	0.24	LCC09S6W
2	0.33	LCC02S1S	0.26	LCC02S1S	0.62	LCC02S1S	0.33	LCC09S6W
3	0.37	LCC01S1S	0.69	LCC01S1S	0.37	LCC11S6W	0.16	LCC01S1S
4	0.26	LCC01S1S	0.62	LCC02S1S	0.28	LCC02S1W	0.27	LCC09S6S
5	0.23	LCC09S1S	0.65	LCC02S1W	0.82	LCC10S6W	0.68	LCC10S6W
5a	0.21	LCC01S1S	0.54	LCC01S1S	0.33	LCC02S1W	0.35	LCC01S1S
6	0.73	LCC04S1S	0.85	LCC02S1S	0.79	LCC05S1W	0.98	LCC09S6W
6a	0.58	LCC02S1S	0.77	LCC02S1S	0.48	LCC02S1S	0.05	LCC09S1S
6b	0.68	LCC02S1S	0.88	LCC02S1S	0.64	LCC02S1W	0.27	LCC09S6S

Notes:

1. Loading combinations described above contain the associated soil profile and season (winter or summer); S1W = 270-500 (winter), S1S = 270-500 (summer), S6W = 2032-100 (winter) and S6S = 2032-100 (summer)
2. Loading Case Combinations:

   LCC01 – Test LCC02 – Construction LCC03 – Normal LCC04 – Extreme
   LCC05 – Extreme LCC06 – Extreme LCC08 – Abnormal LCC09 – Abnormal/Extreme
   LCC10 – Abnormal/Extreme LCC11 – Abnormal/Extreme LCC12 – Abnormal/Extreme
3. Symbols: S = Reinforcing Steel DCR, Si = Inside Reinforcing Steel DCR, So = Outside Face Reinforcing DCR and S_tie = Shear Tie DCR
4. Groups: Refer to Figure 3L-18 and Table 3.8.5-4 for details on the location and definition of reinforcing steel groups.

Table 3L-15 Fuel Handling Area Beam and Column Section Properties

Section Description	Flange Width (ft)	Overall Depth (ft)	Flange Thickness (ft)	Web Thickness (ft)
Column C1	2.000	4.917	0.167	0.104
Column C2	2.000	4.000	0.208	0.104
Column C3	2.000	4.917	0.208	0.104
Steel Beam G1	1.042	1.842	0.096	0.060

Table 3L-16 Fuel Handling Area Beam and Column Design Summary

Mark Number	Loading Condition	Factored Load at I End					Factored Load at J End					Controlling Limit	
		Axial Force, FX (kip)	Major Axis Bending, MY (kip-ft)	Minor Axis Bending, MZ (kip-ft)	Major Axis Shear, SFZ (kip)	Minor Axis Shear, SFY (kip)	Axial Force, FX (kip)	Major Axis Bending, MY (kip-ft)	Minor Axis Bending, MZ (kip-ft)	Major Axis Shear, SFZ (kip)	Minor Axis Shear, SFY (kip)	Interaction Value	AISC Equation
G1	Max	480	5654	172	458	138	480	5654	172	458	138	0.78 (1)	Q1.6-1a
	Min	-493	-6350	-184	-422	-115	-493	-6350	-184	-422	-115		
C1	Max	1536	3887	128	471	118	1536	3887	128	471	118	0.93 (1)	Q1.6-1a
	Min	-1352	-4321	-164	-425	-117	-1352	-4321	-164	-425	-117		
C2	Max	918	4544	124	348	81	918	4544	124	348	81	0.84 (1)	Q1.6-1a
	Min	-1004	-4268	-102	-337	-82	-1004	-4268	-102	-337	-82		
C3	Max	1312	2566	292	284	86	1312	2566	292	284	86	0.89 (1)	Q1.6-1a
	Min	-1886	-3033	-269	-292	-60	-1886	-3033	-269	-292	-60		

Note:

1. Design load case combination that controls the structural steel member design is $1.0D+1.0L+1.0E_{ss}+T_a$.

Table 3L-17 Capacity of Principal Penetration Critical Sections

Sleeve Size, (in.)	Penetration Type	Axial, N (kip)	Shear, V (kip)	Moment, M (kip-in)	Torsion, T (kip-in)
60.0	Main Steam(1)(2)	1565	783	121244	63867
30.5	Fuel Transfer Tube(1)(3)	68	68	1333	340

Notes:

1. Design loading conditions for penetration sleeves is developed in accordance with NE-3110 (Reference 3L-5).
2. Service Level D controls the design capacity of this penetration.
3. Service Level A controls the design capacity of this penetration.

Table 3L-18 Demand to Capacity Ratios for Peripheral Shear at Penetrations

Penetration Type	Loading Condition	Reinforcing Required, (in^2/ft)	Reinforcing Available, (in^2/ft)	Additional Reinforcing Provided	Final DCR	Load Case (4) (Meridional, and Hoop Direction)
Main Steam	Service	Not Req'd	(#5@18″) 0.207	Not Req'd	0.41	LCC01 and LCC01
	Factored	0.218		(#5@18″)(1) 0.207	0.58	LCC12 and LCC08
Fuel Transfer Tube(2)	Service	Not Req'd		Not Req'd	< 0.17(3)	LCC01 and LCC01
	Factored	0.097		Not Req'd	< 0.57	LCC12 and LCC08

Notes:

1. Total shear reinforcing provided by the inclusion of #5@18" between existing #5@18" ties yields #5@9" = 0.413 in^2/ft;
2. Design results provided in this table are based on bounding loading conditions (feedwater pipe penetration) evaluated in design. Feedwater pipe penetration loading conditions control the reinforcement design over the Type 1 through Type 13 and fuel transfer tube penetration loading conditions. Forces exerted onto the PCCV from the feedwater pipe are more than 4 times larger than the aforementioned penetrations.
3. Demand to capacity ratio is calculated without considering presence of existing shear ties available in the cylinder cross section.
4. Loading Case Combinations:

LCC01 – Test	LCC02 – Construction	LCC03 – Normal	LCC04 – Extreme
LCC05 – Extreme	LCC06 – Extreme	LCC08 – Abnormal	LCC09 – Abnormal/Extreme
LCC10 – Abnormal/Extreme	LCC11 – Abnormal/Extreme	LCC12 – Abnormal/Extreme	

Table 3L-19 Code Jurisdiction for Structural Components at PCCV Interface

Component	Code of Record	Secondary Code Cited by ASME Code Provisions
Concrete Containment Shell and Dome	ASME Section III, Division 2 (Reference 3L-3)	-
Basemat Foundation		
Steel Liner Plate Including SC Wall Base Liner Anchors		
Mechanical Penetration Sleeves	ASME Section III, Division 1 and 2 (References 3L-2 and 3L-5)	AISC Manual of Steel Construction, 8th Edition (CC-3740, item c) (Reference 3L-6)
Electrical Penetration Sleeves		
Equipment Hatch		-
(2) Personnel Airlocks		
Fuel Transfer Tube		
Crane Bracket, Temporary and Permanent Attachments	ASME Section III, Division 2 (Reference 3L-3)	AISC Manual of Steel Construction, 8th Edition (CC-3650) (Reference 3L-6)
Containment External Anchors (not attached to liner)		ACI 349-06 (CC-3571) (Reference 3L-1)
Fuel Handling Canal in R/B	ACI 349-06 (Reference 3L-1)	-
Main Steam and Feedwater Annulus Space		
Containment Internal Structures		
Polar Crane Runway Girders	ANSI/AISC N690-1994 (Reference 3L-2)	-
Containment Spray Ring	ASME Section III, Division 1 (Reference 3L-5)	-

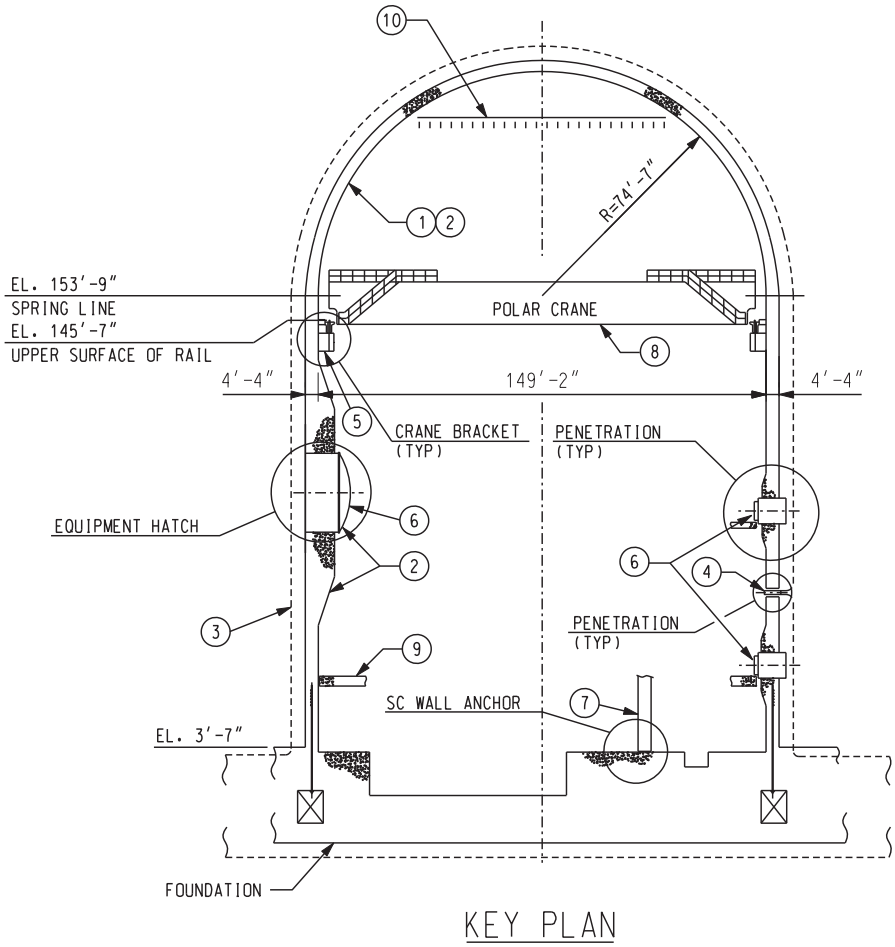

1. Containment vessel conforms to ASME Section III, Division 2 (Reference 3L-3).
2. Pressure retaining portion of the containment vessel.
3. ASME Code jurisdictional boundary.
4. Sections of penetrations not backed by concrete conform to the requirements of ASME Section III, Division 1, Subsection NE (Reference 3L-5).
5. Welded attachments and anchorage conform to the requirements of ASME Section III, Division 2 (Reference 3L-3).
6. E/H and A/L components conform to the requirements of ASME Section III, Division 1, Subsection NE (Reference 3L-5).
7. SC walls/modules are outside the jurisdiction of ASME Code.
8. Polar crane, girder and rail are outside the jurisdiction of ASME Code.
9. CIS floor and supports are outside the jurisdiction of ASME Code.
10. Containment spray ring and pipe supports conform to requirements of Subsection NC (Class 2) and NF respectively.

Figure 3L-1 Boundary of Jurisdiction of ASME Code (Sheet 1 of 3)

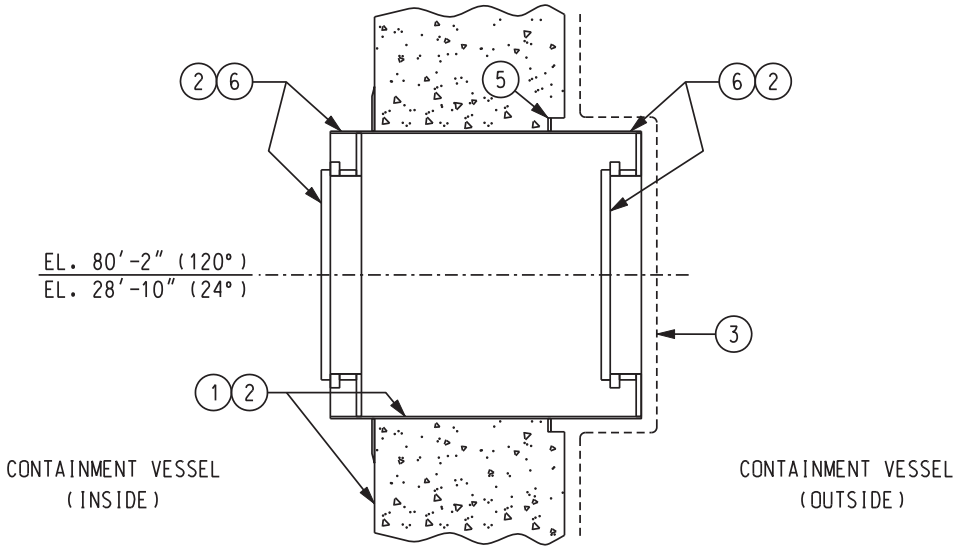

Personnel Airlock

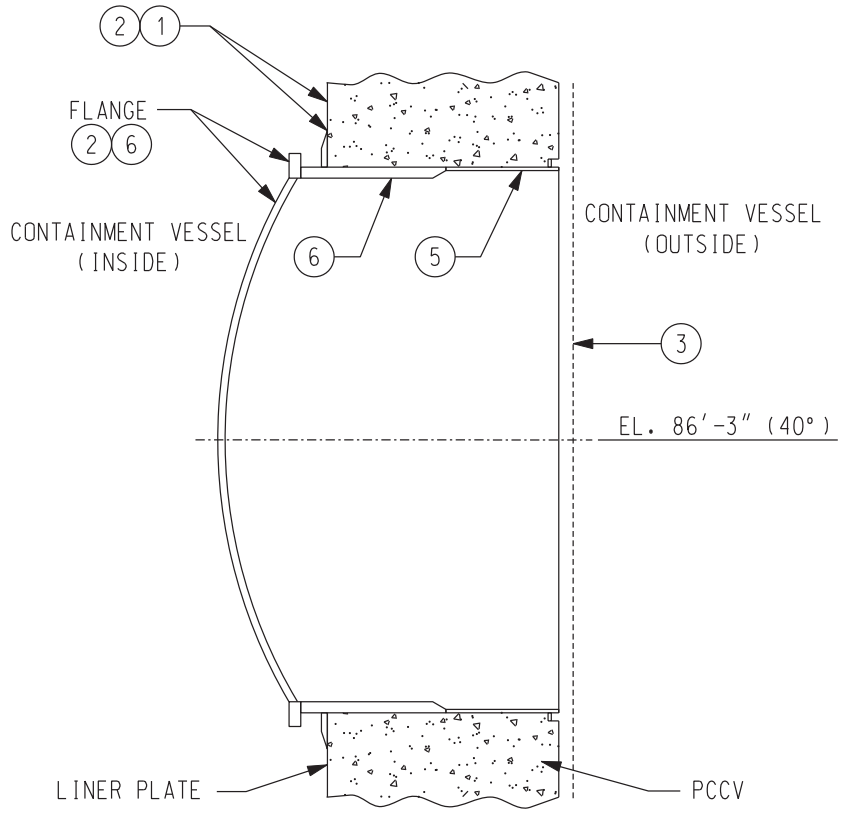

Equipment Hatch

Figure 3L-1 Boundary of Jurisdiction of ASME Code (Sheet 2 of 3)

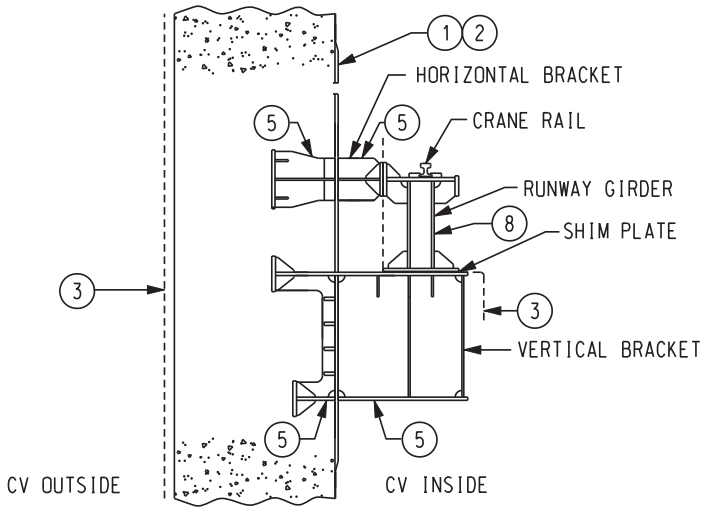

Polar Crane Bracket

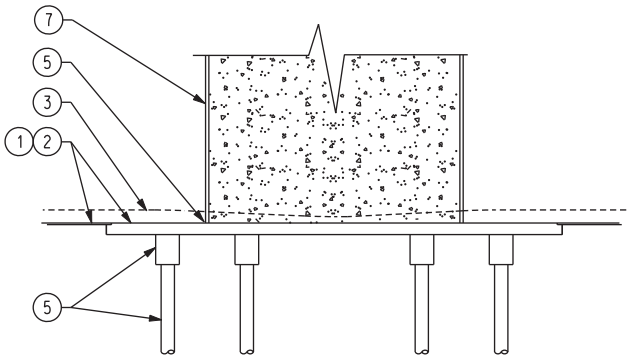

SC Module Attachment

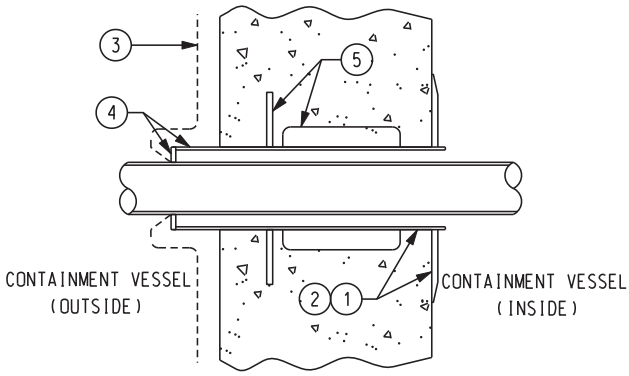

Containment Penetration

Figure 3L-1 Boundary of Jurisdiction of ASME Code (Sheet 3 of 3)

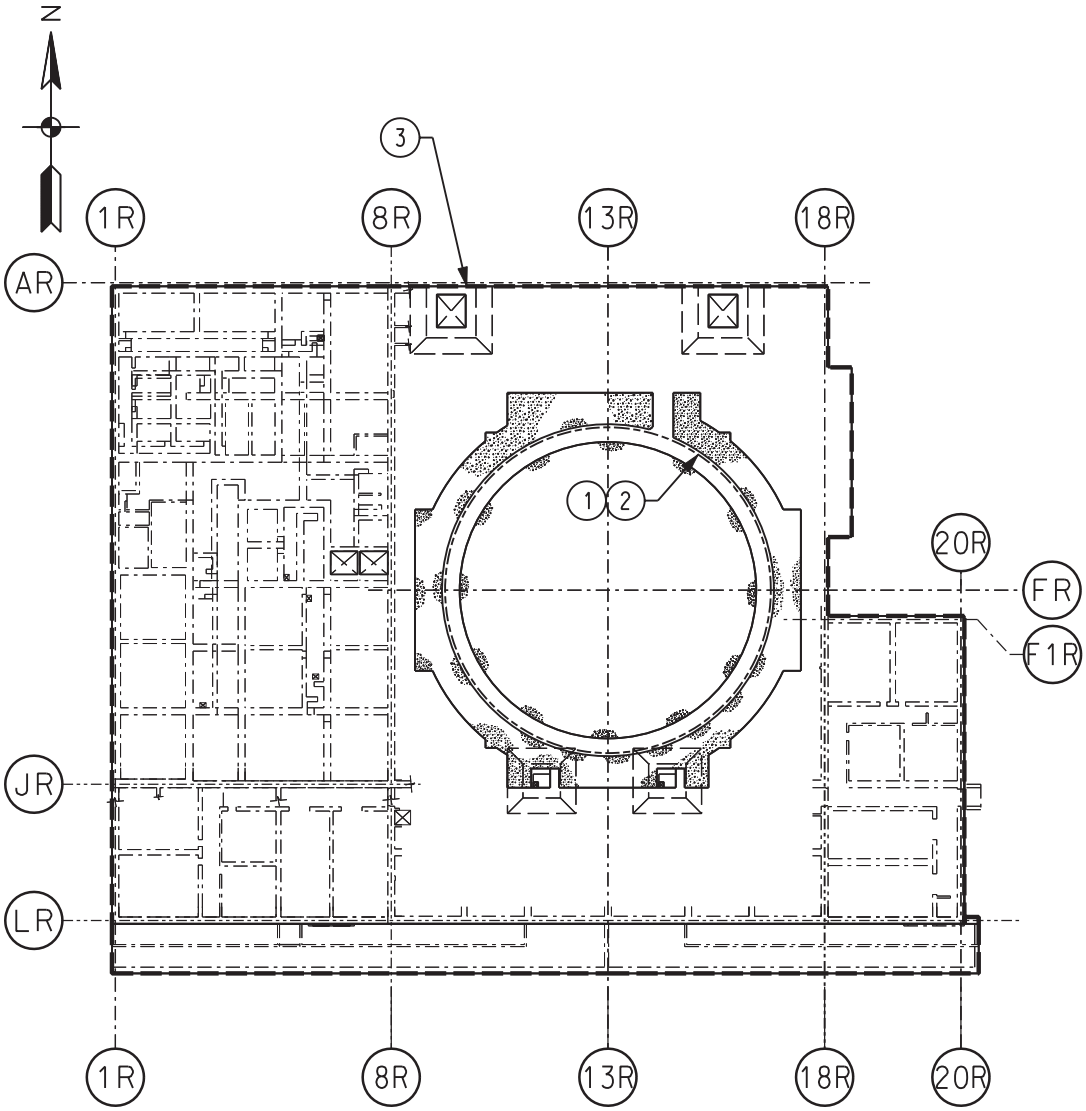

1. Containment vessel conforms to ASME Section III, Division 2 (Reference 3L-3).
2. Pressure retaining portion of the containment vessel.
3. Extents of ASME Code jurisdictional boundary (Reference 3L-3, Subarticle CC-1140(b)).

Figure 3L-2 Boundary of Jurisdiction of ASME Code at Basemat

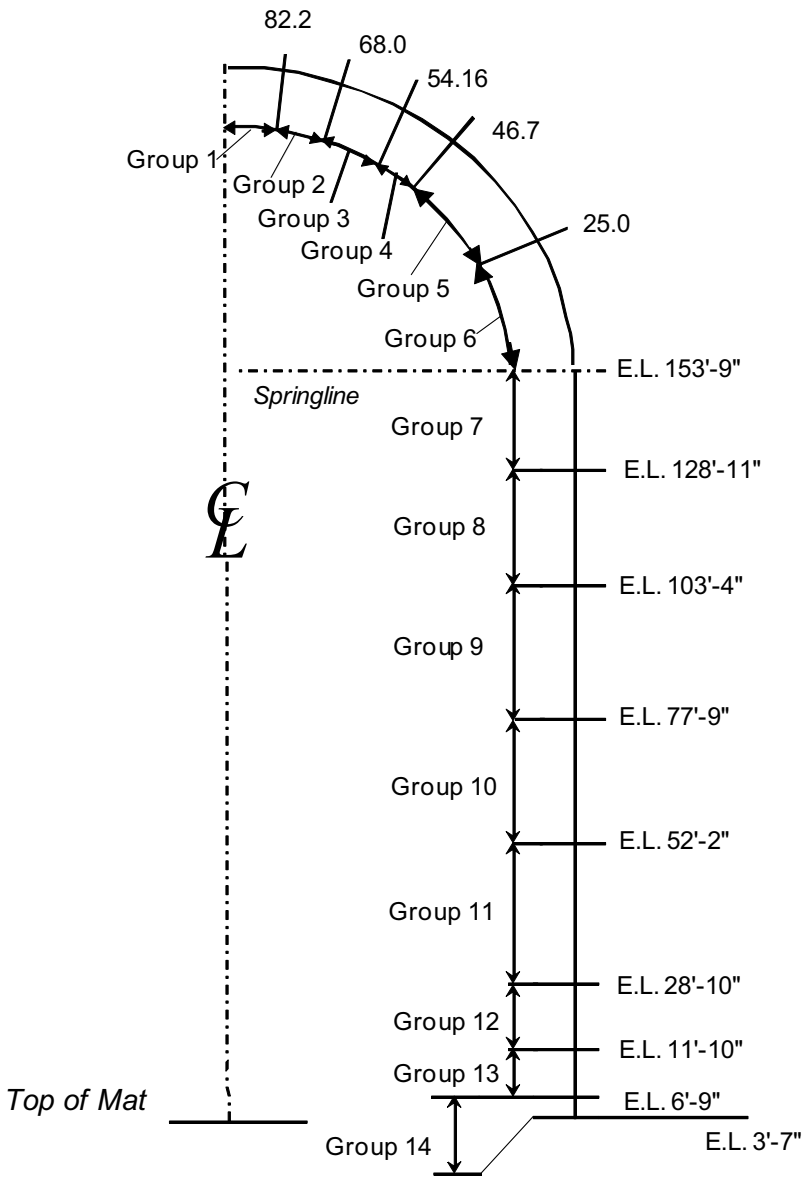

Figure 3L-3 PCCV Design Groups

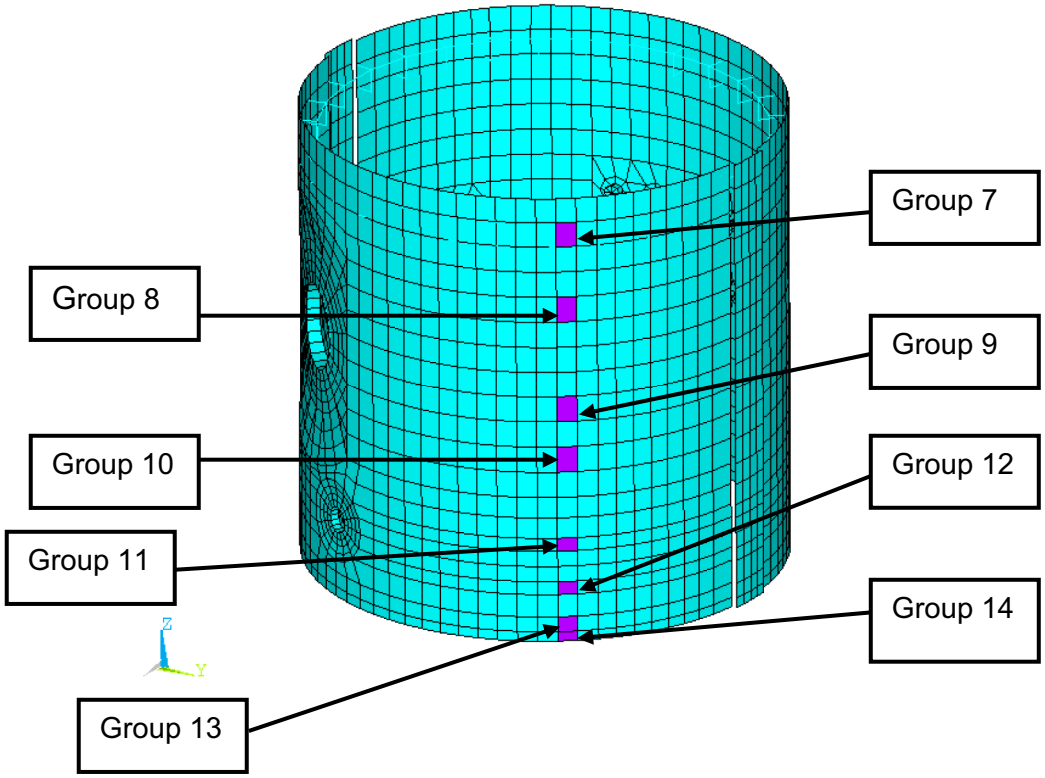

Figure 3L-4 PCCV Cylinder Design Element Groups

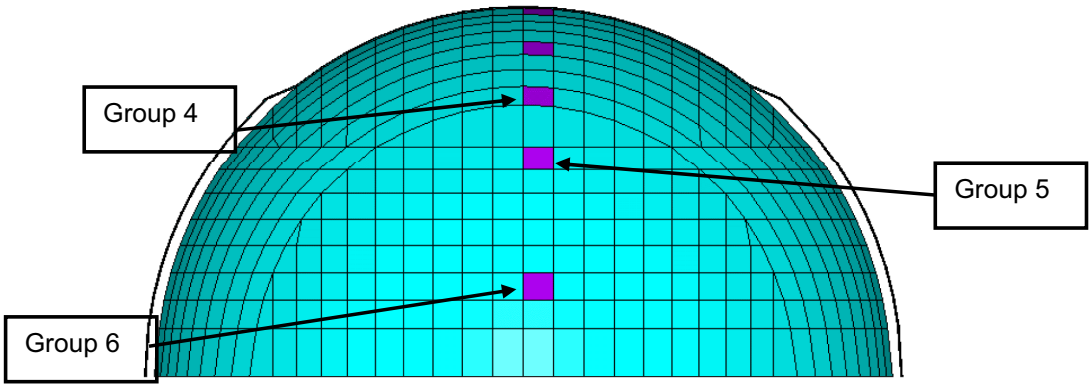

Figure 3L-5 PCCV Dome Design Element Groups – Elevation

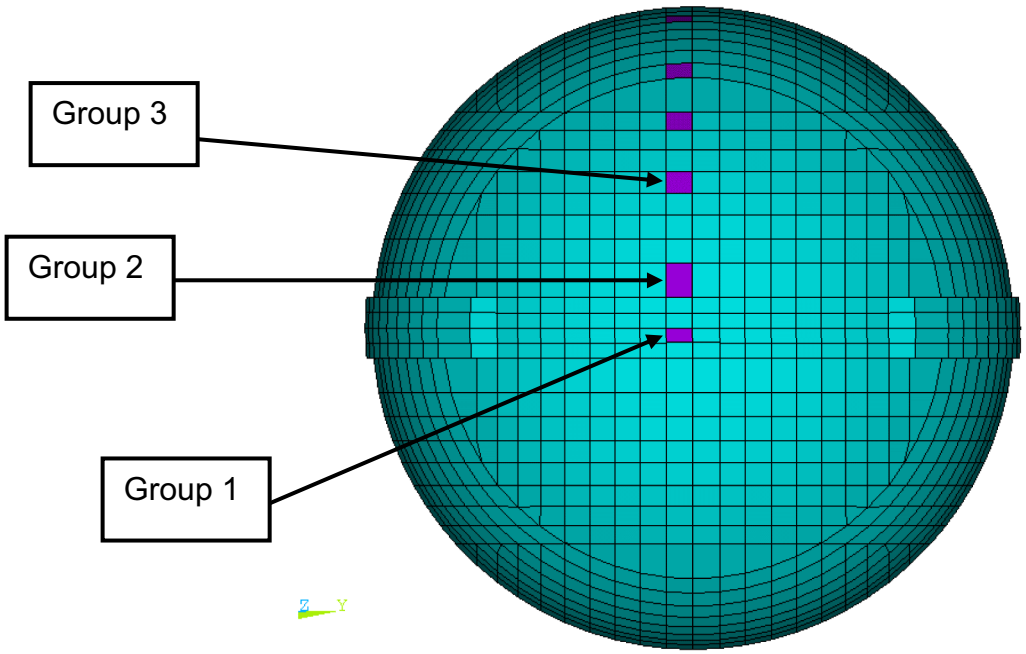

Figure 3L-6 PCCV Dome Design Elements Groups – Plan

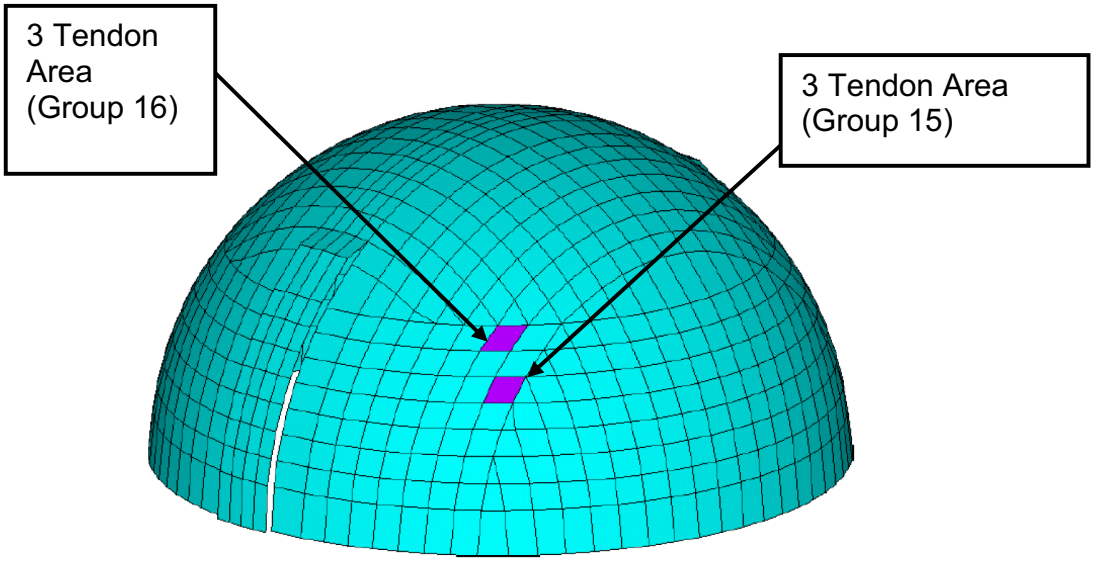

Figure 3L-7 PCCV Design Elements for 3-Tendon Area

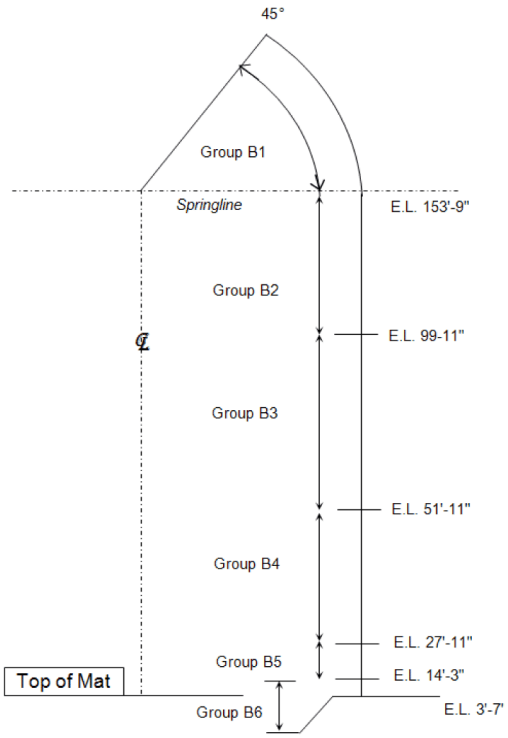

Figure 3L-8 PCCV Buttress Design Groups

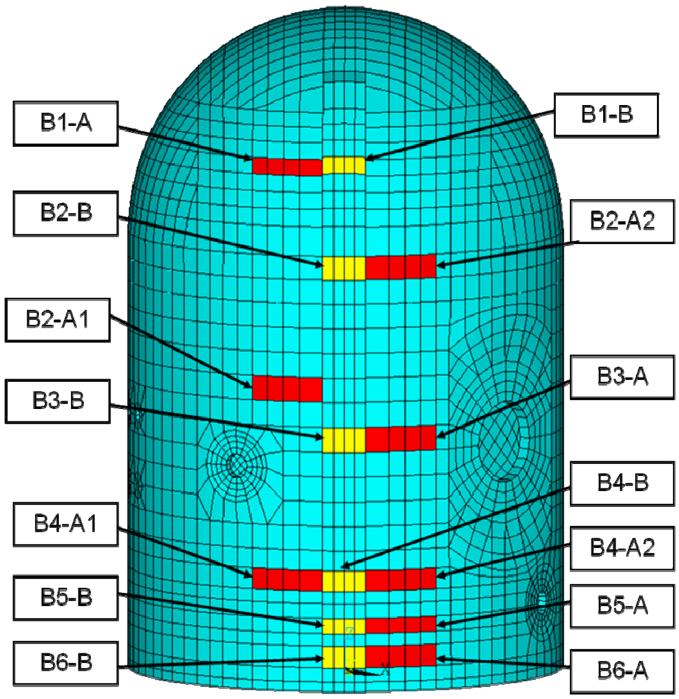

Figure 3L-9 PCCV Buttress Design Elements

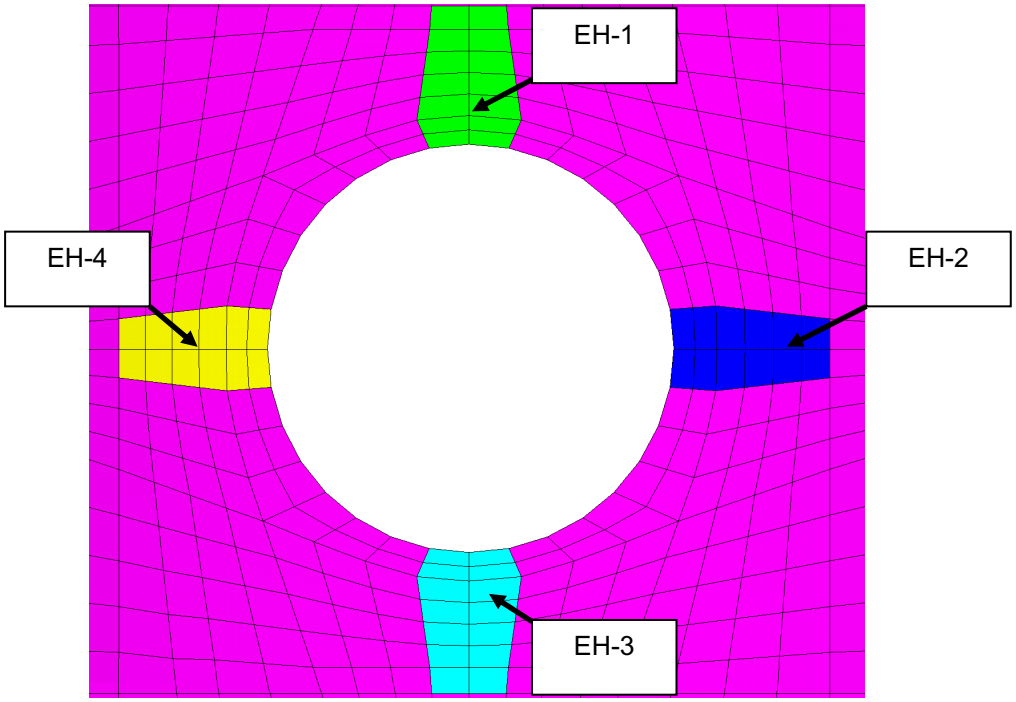

Figure 3L-10 Equipment Hatch Design Element Groups

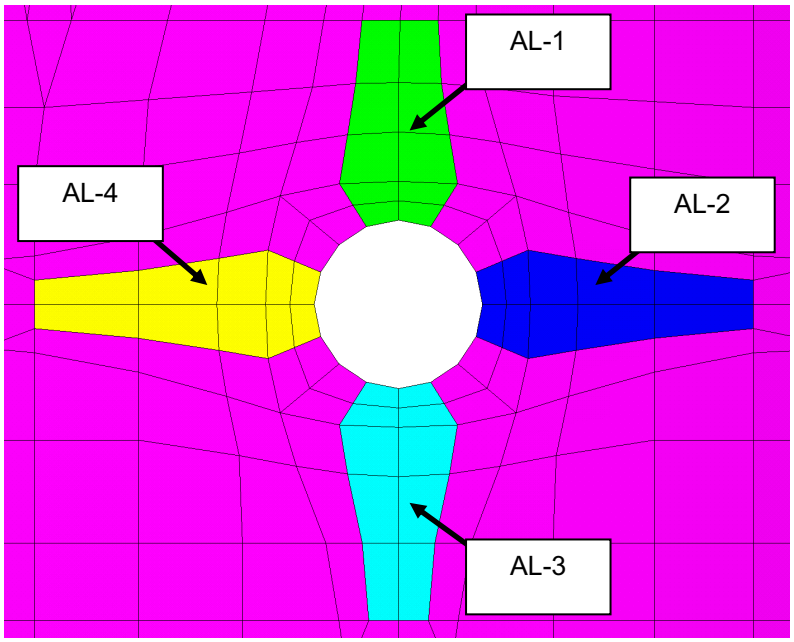

Figure 3L-11 Personnel Airlock #1 Design Groups

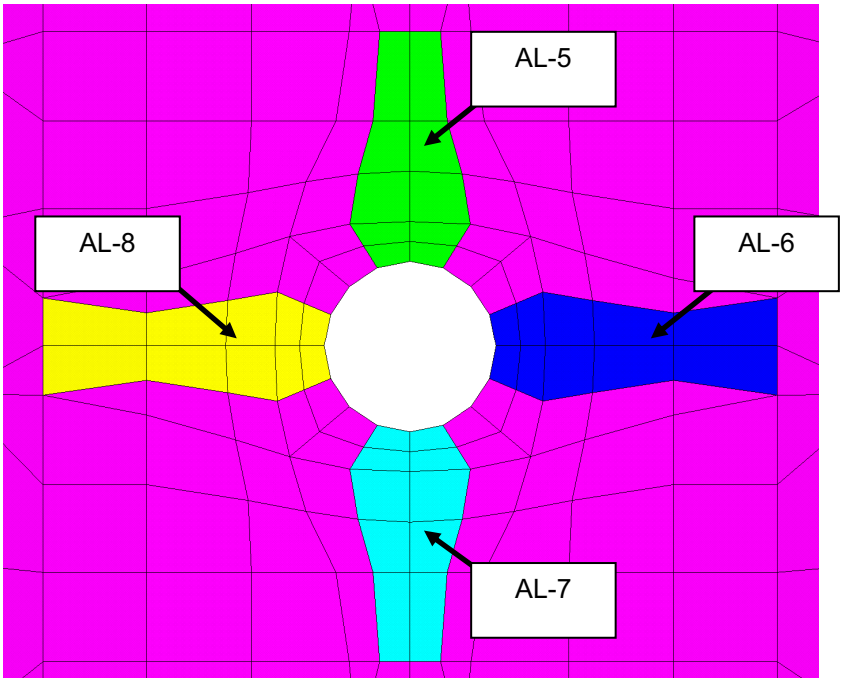

Figure 3L-12 Personnel Airlock #2 Design Groups

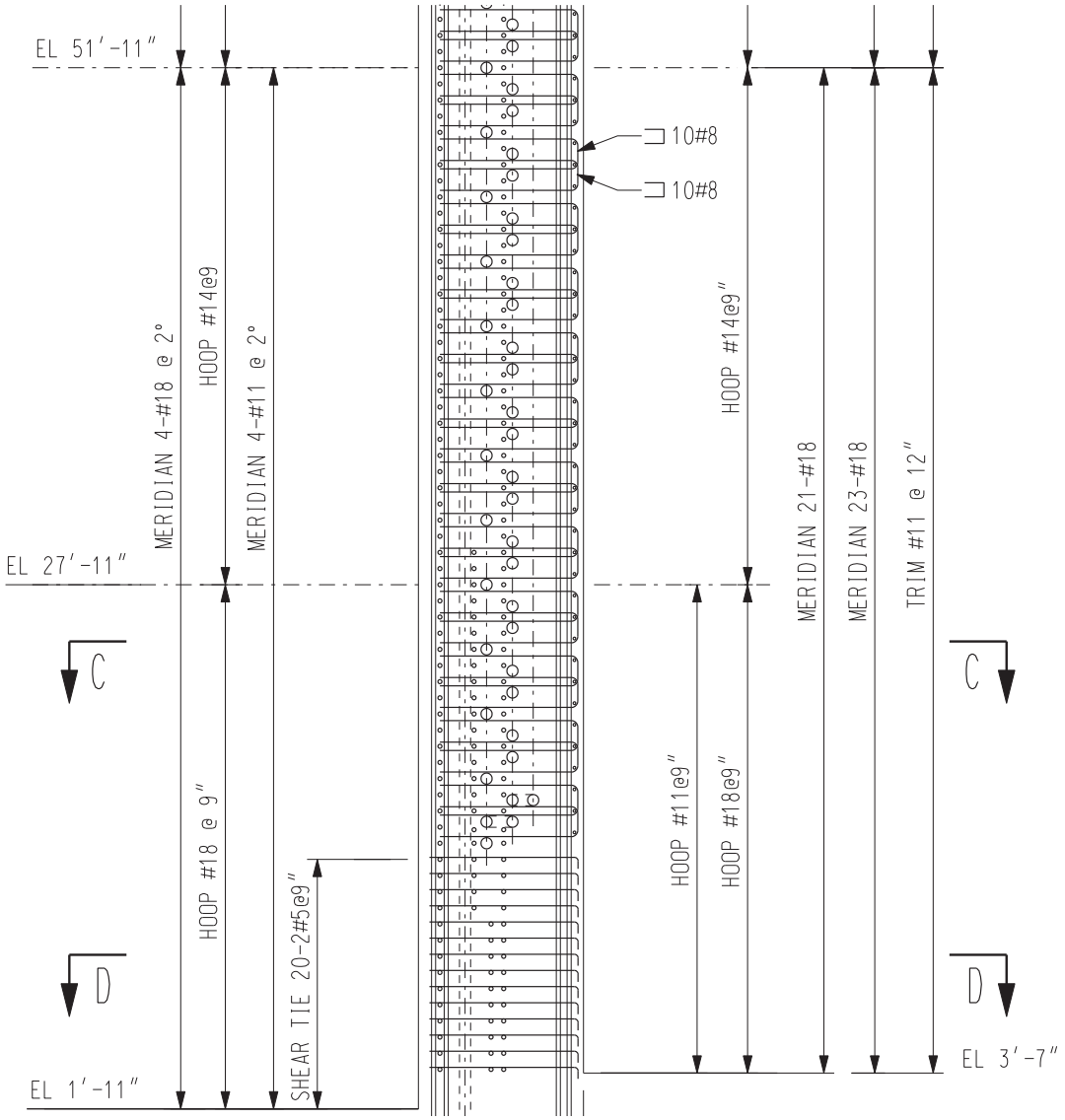

Note: Final reinforcement configuration details may vary and are subject to changes necessary for fabrication and/or constructability.

Figure 3L-13 PCCV Buttress Elevation Section – Cylinder (EL. 3’-7” to 51’-11”)

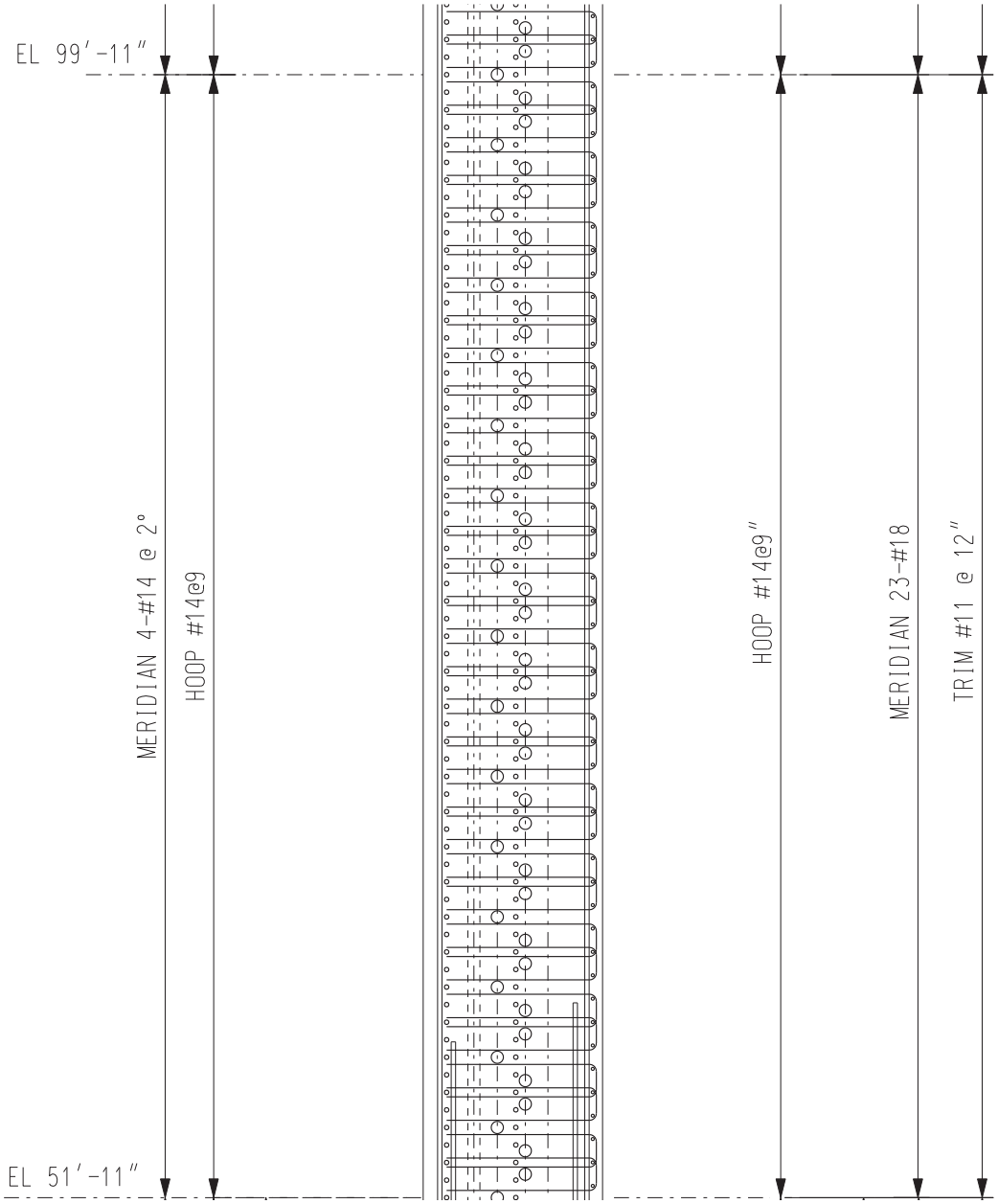

Note: Final reinforcement configuration details may vary and are subject to changes necessary for fabrication and/or constructability.

Figure 3L-14 PCCV Buttress Elevation Section – Cylinder (EL. 51’-11” to 99’-11”)

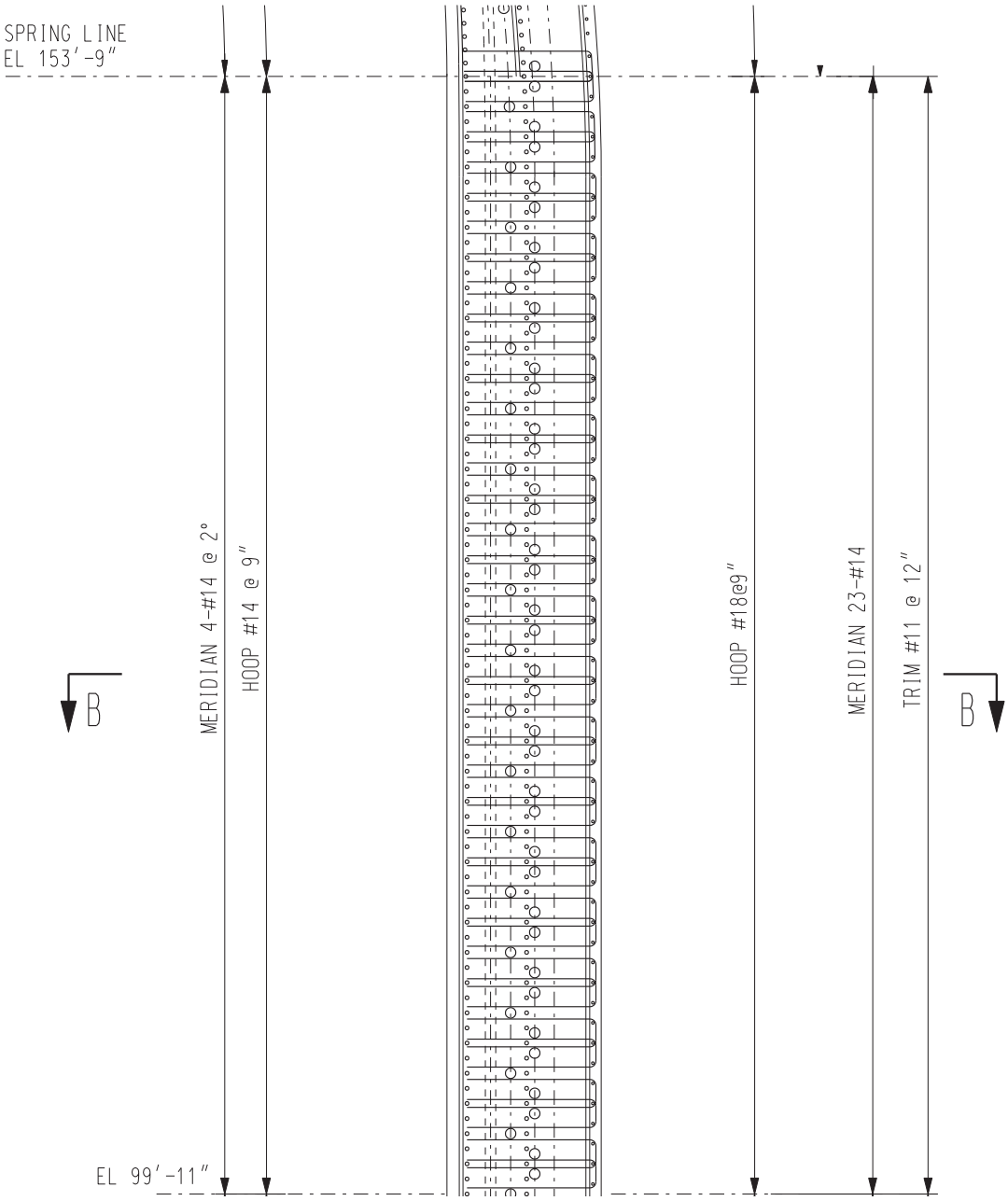

Note: Final reinforcement configuration details may vary and are subject to changes necessary for fabrication and/or constructability.

Figure 3L-15 PCCV Buttress Elevation Section – Cylinder (EL. 99’-11” to 153’-9”)

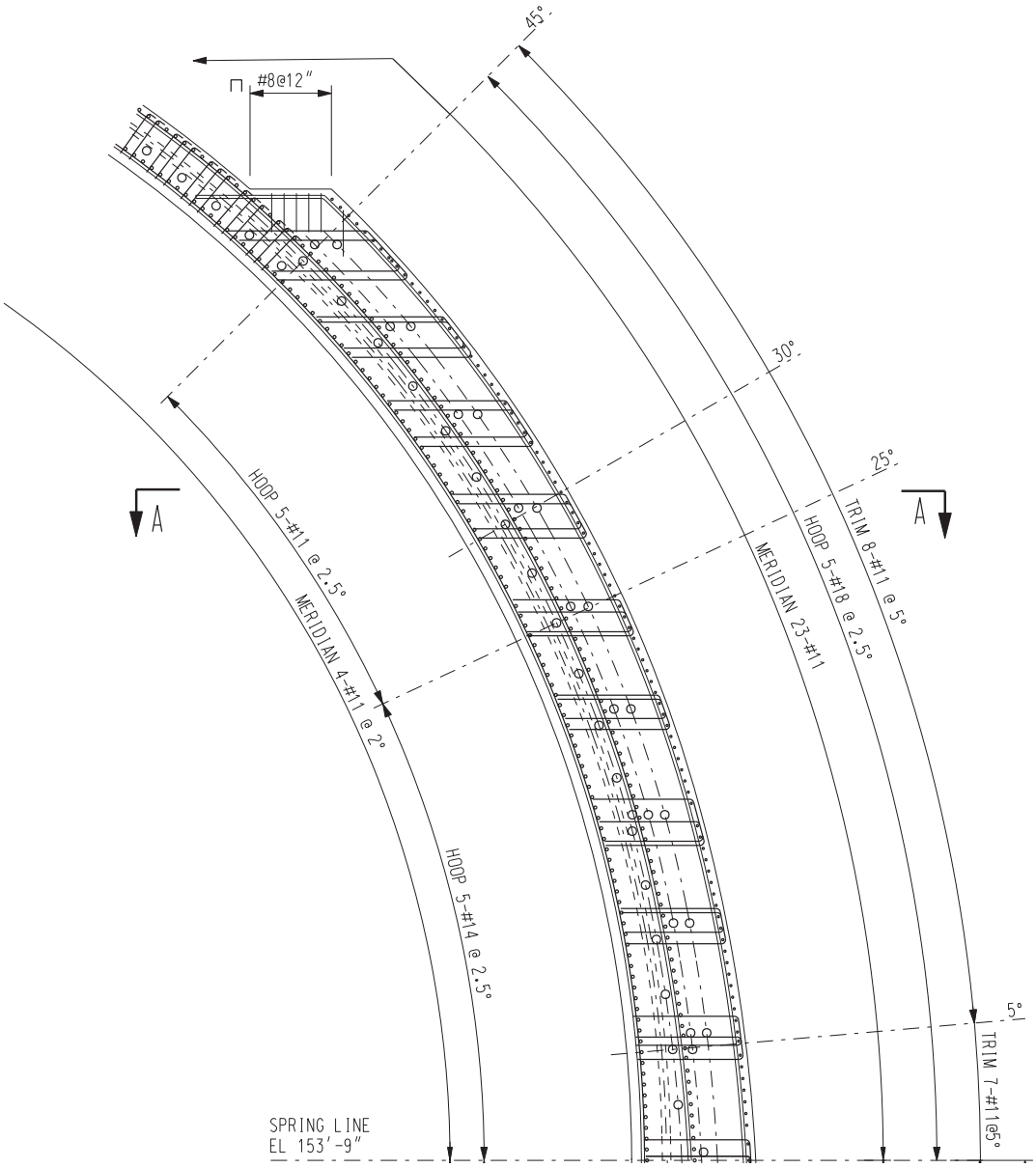

Note: Final reinforcement configuration details may vary and are subject to changes necessary for fabrication and/or constructability.

Figure 3L-16 PCCV Buttress Elevation Section – Dome

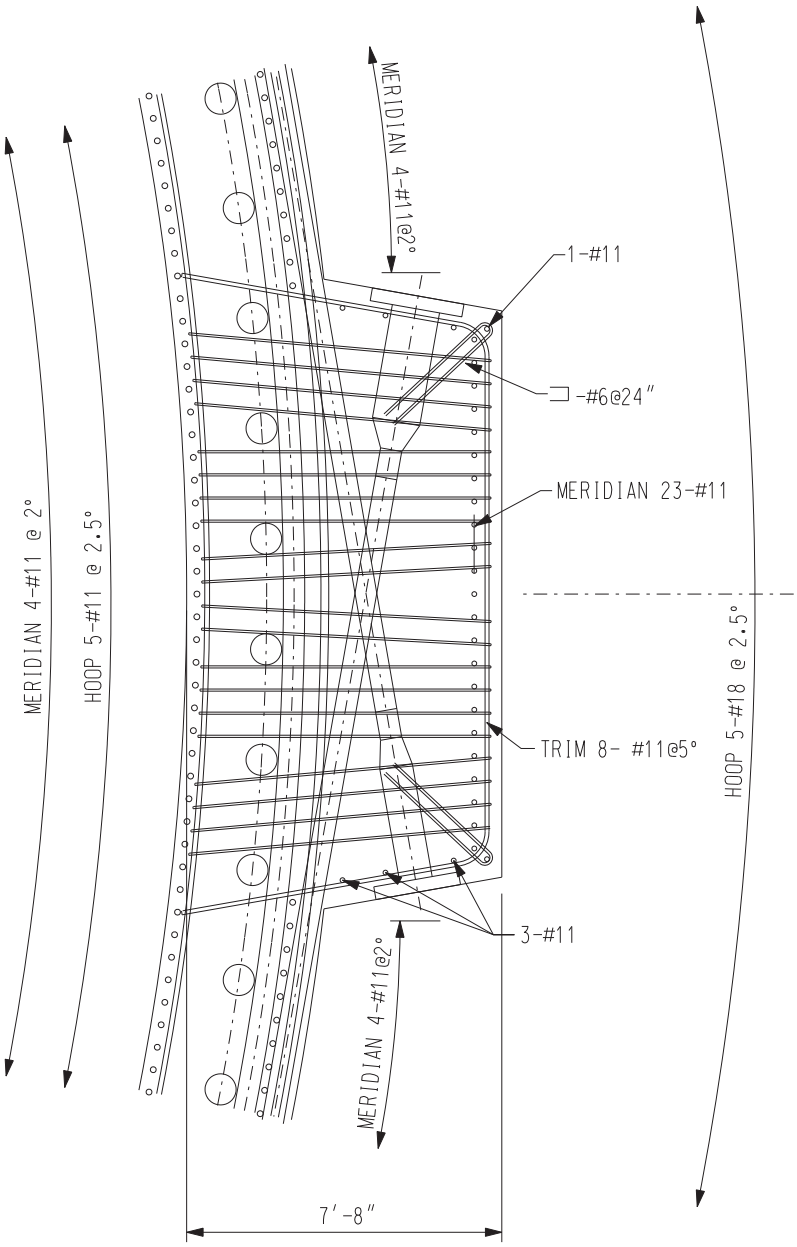

Section Cut A-A

Note: This section is applicable to design elements B1-A and B1-B shown on Figure 3L-9.

Note: Final reinforcement configuration details may vary and are subject to changes necessary for fabrication and/or constructability.

Figure 3L-17 Buttress Meridional Reinforcement Details (Sheet 1 of 5)

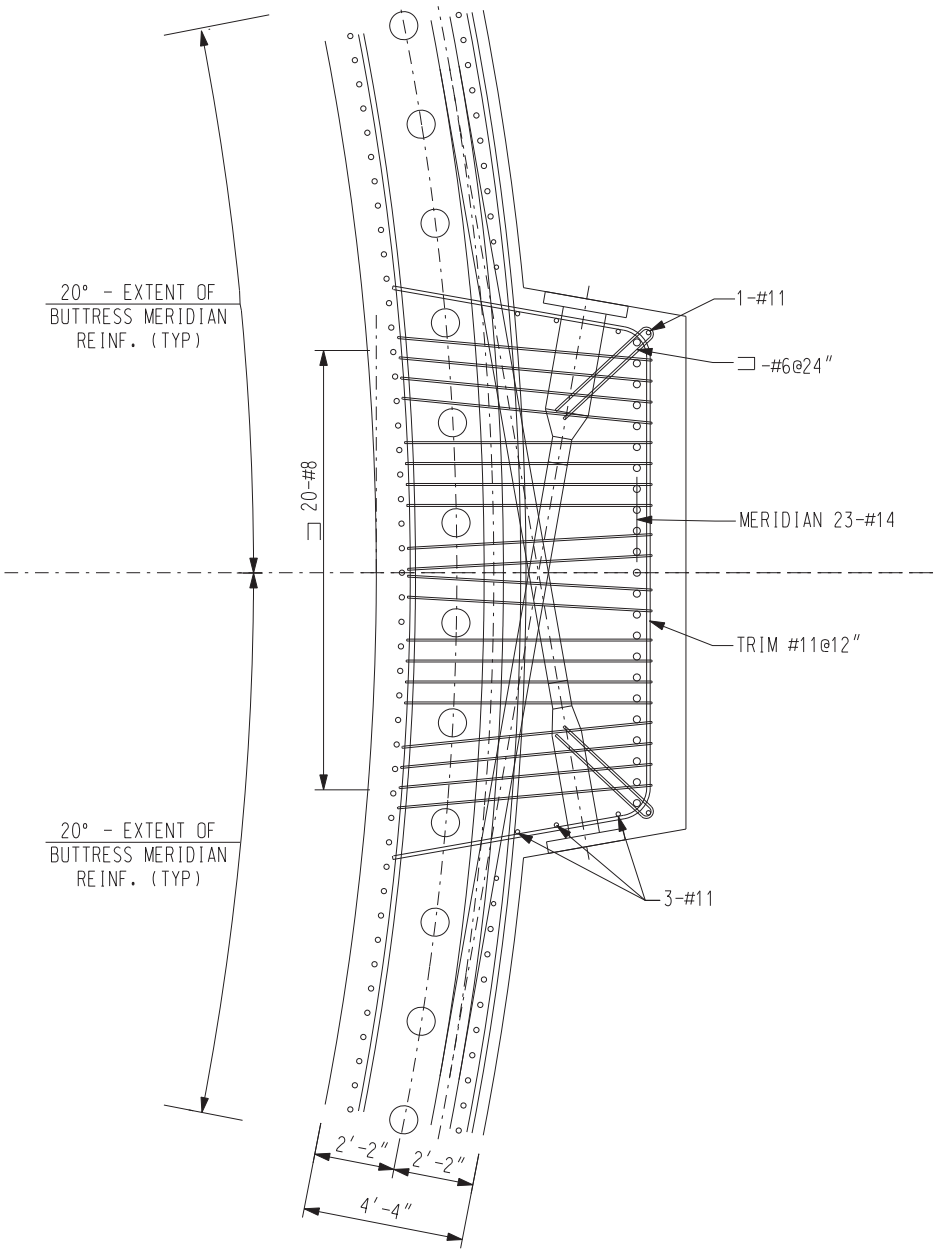

Section Cut B-B

Note: This section is applicable to design elements B3-A, B3-B, B2-A1, B2-B and B2-A2.

Note: Final reinforcement configuration details may vary and are subject to changes necessary for fabrication and/or constructability.

Figure 3L-17 Buttress Meridional Reinforcement Details (Sheet 2 of 5)

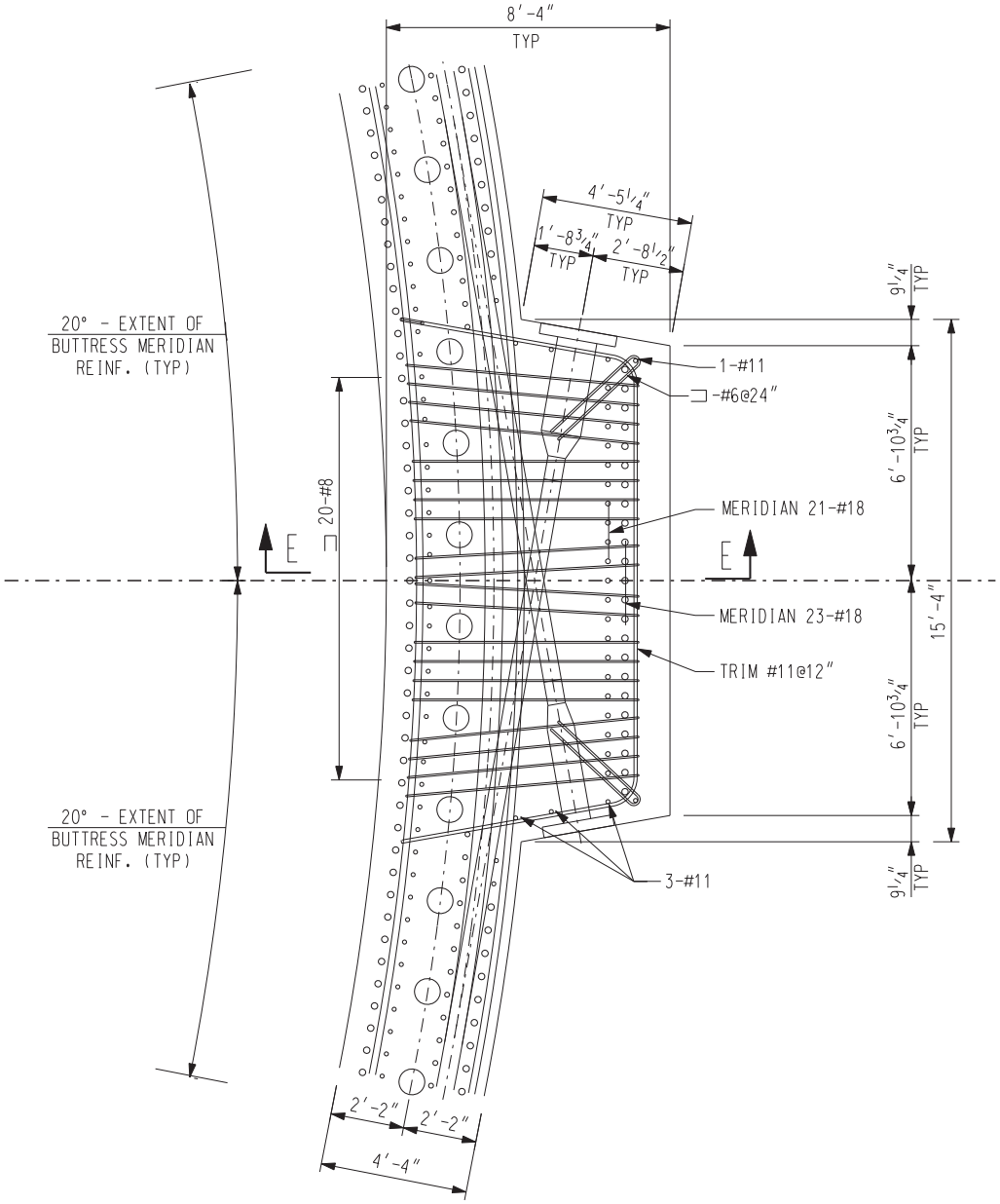

Section Cut C-C

Note: This section is applicable to design elements B5-A, B5-B, B4-A2, B4-B, B4-A1 and B5-B.

Note: Final reinforcement configuration details may vary and are subject to changes necessary for fabrication and/or constructability.

Figure 3L-17 Buttress Meridional Reinforcement Details (Sheet 3 of 5)

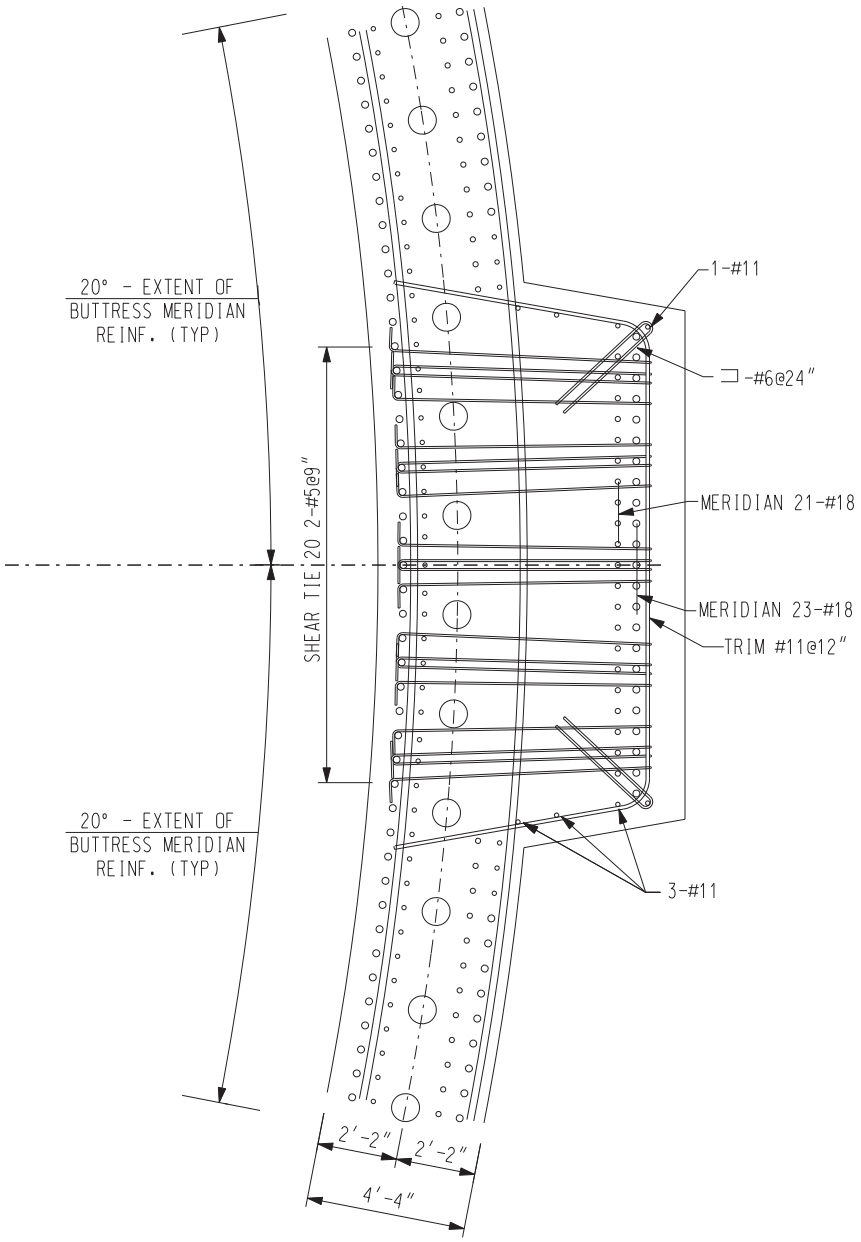

Section Cut D-D

Note: This section is applicable to design elements B6-A and B6-B.

Note: Final reinforcement configuration details may vary and are subject to changes necessary for fabrication and/or constructability.

Figure 3L-17 Buttress Meridional Reinforcement Details (Sheet 4 of 5)

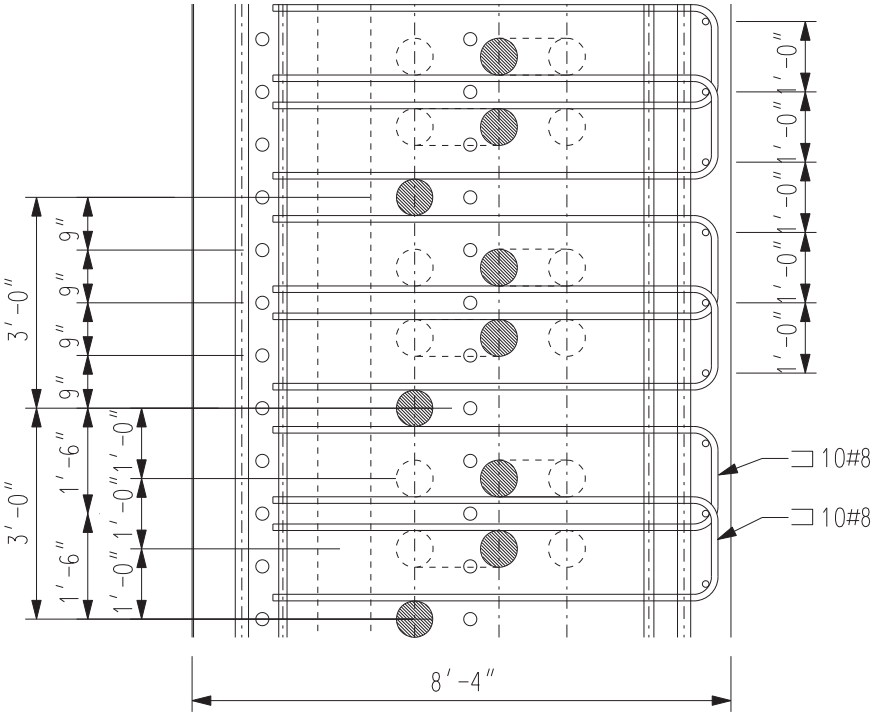

Section Cut E-E

Note: Final reinforcement configuration details may vary and are subject to changes necessary for fabrication and/or constructability.

Figure 3L-17 Buttress Meridional Reinforcement Details (Sheet 5 of 5)

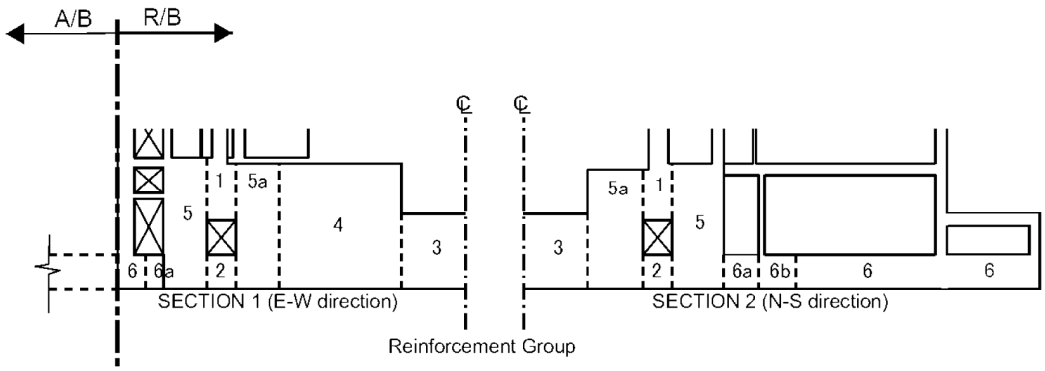

Note:			
	1	Upper Part of Tendon Gallery	Direction 1: Radial, Direction 2: Circumferential
	2	Lower Part of Tendon Gallery	Direction 1: Top: Radial, Bottom: N-S + Circumferential Direction 2: Top: Circumferential, Bottom: E-W + Circumferential
	3	Lower Part of Cavity	Direction 1: N-S, Direction 2: E-W
	4	Inside Secondary Shield Wall	Direction 1: N-S, Direction 2: E-W
	5, 5a	Outside Secondary Shield Wall	Direction 1: Top: Radial, Bottom: N-S + Circumferential Direction 2: Top: Circumferential, Bottom: E-W + Circumferential
	6, 6a, 6b	Peripheral Areas	Direction 1: N-S, Direction 2: E-W

Figure 3L-18 Reinforcement Groups for R/B Complex Basemat

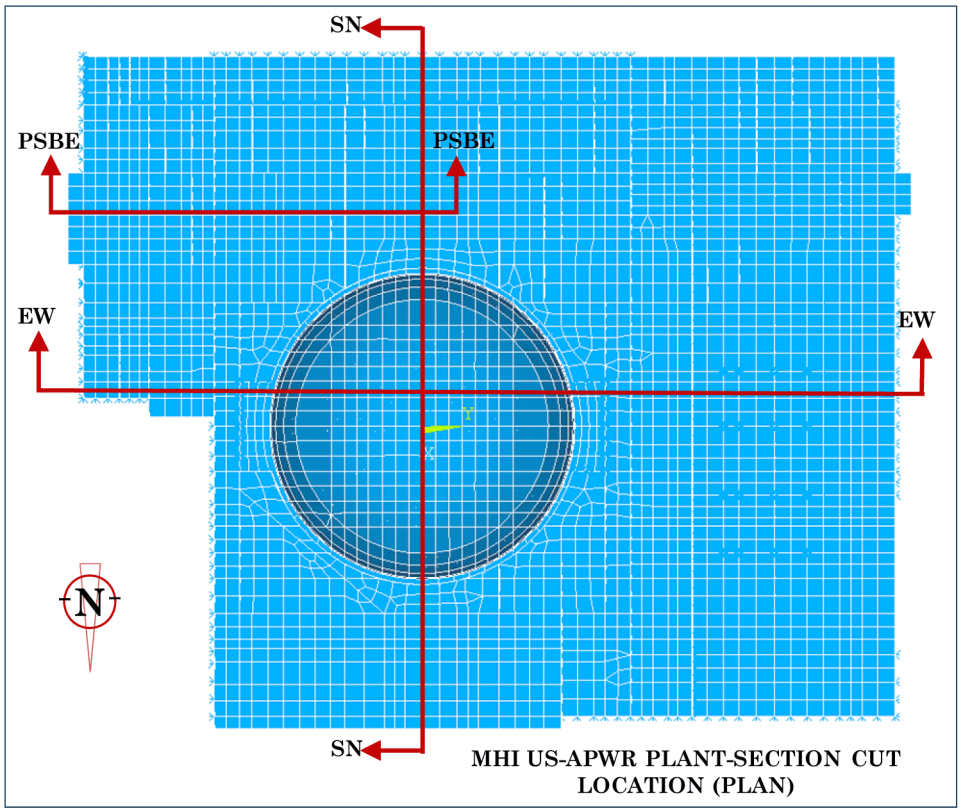

Figure 3L-19 Section Cuts for R/B Complex Basemat Design

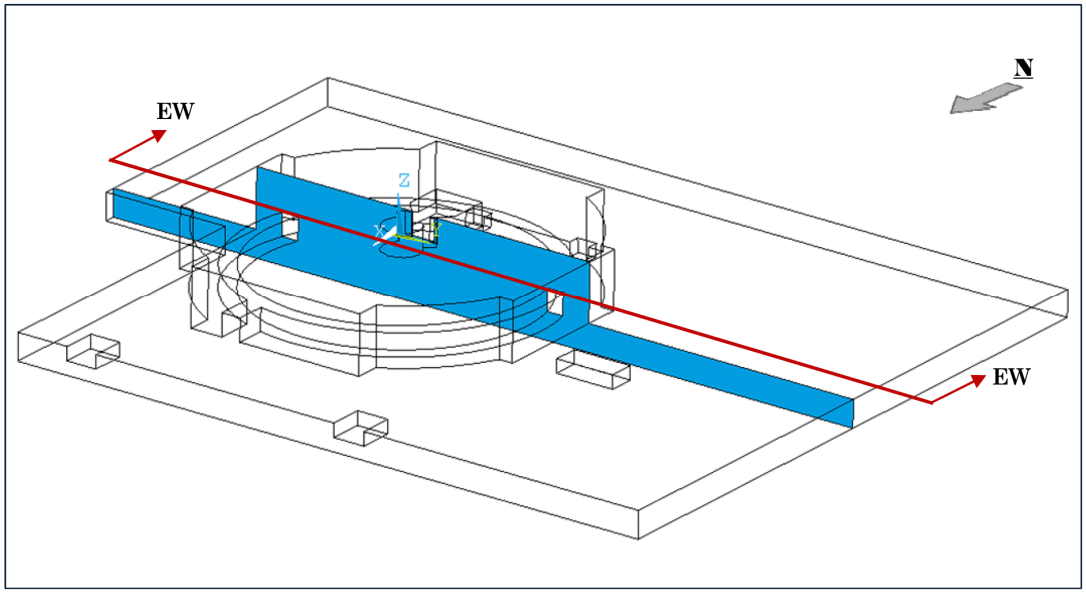

Figure 3L-20 Basemat East-West Section Cut

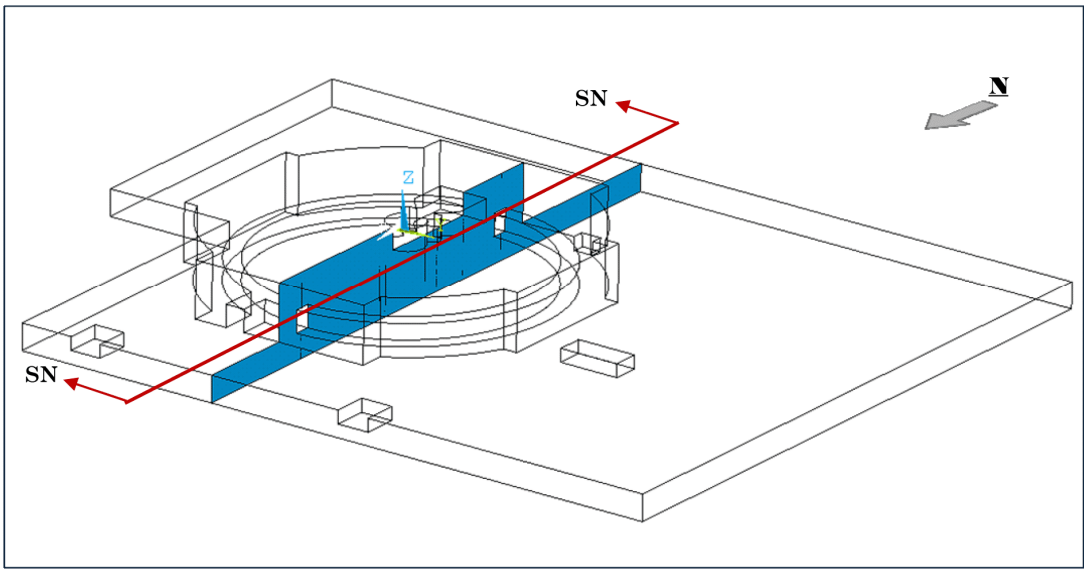

Figure 3L-21 Basemat South-North Section Cut

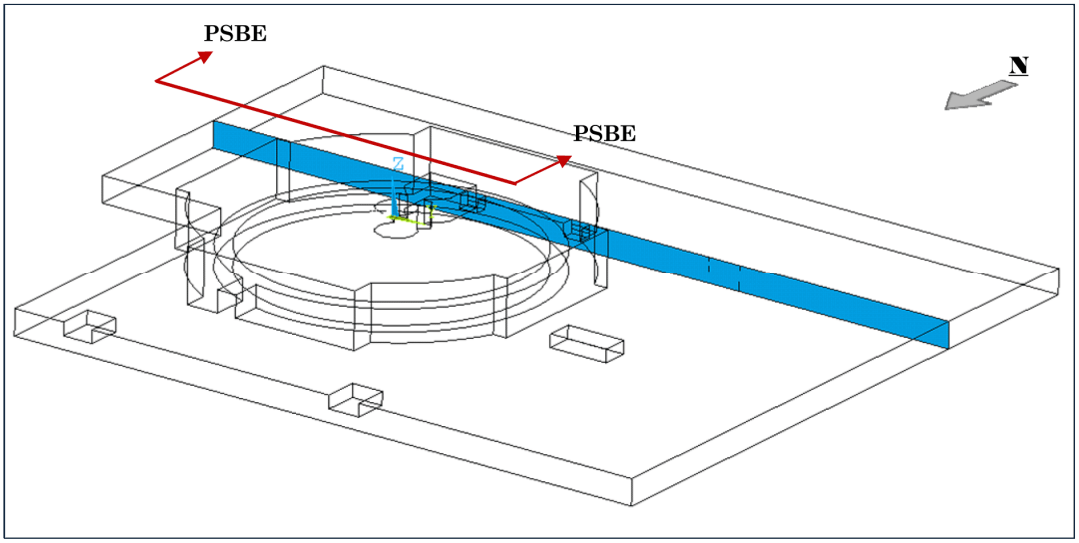

Figure 3L-22 Basemat East PS/B Section Cut

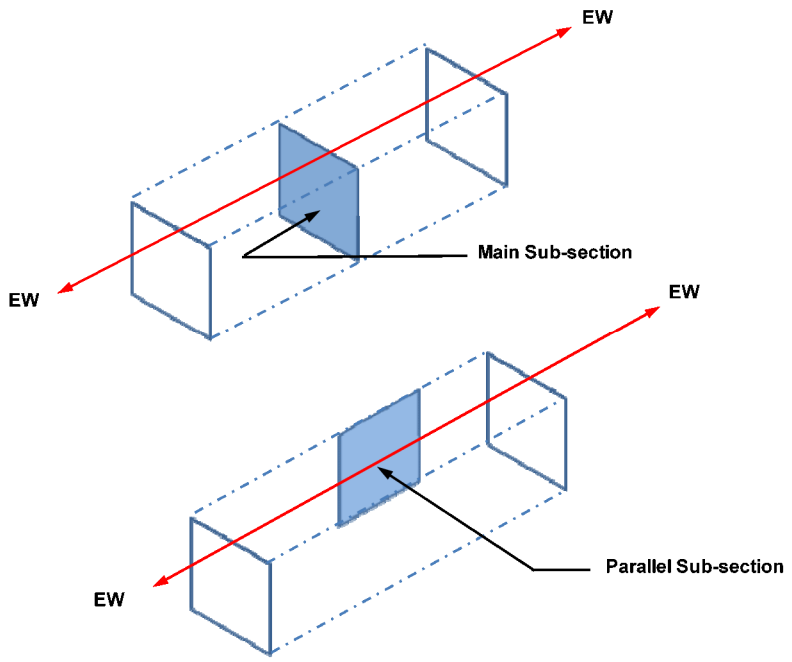

Figure 3L-23 Basemat Categorization of Sub-Section Cuts

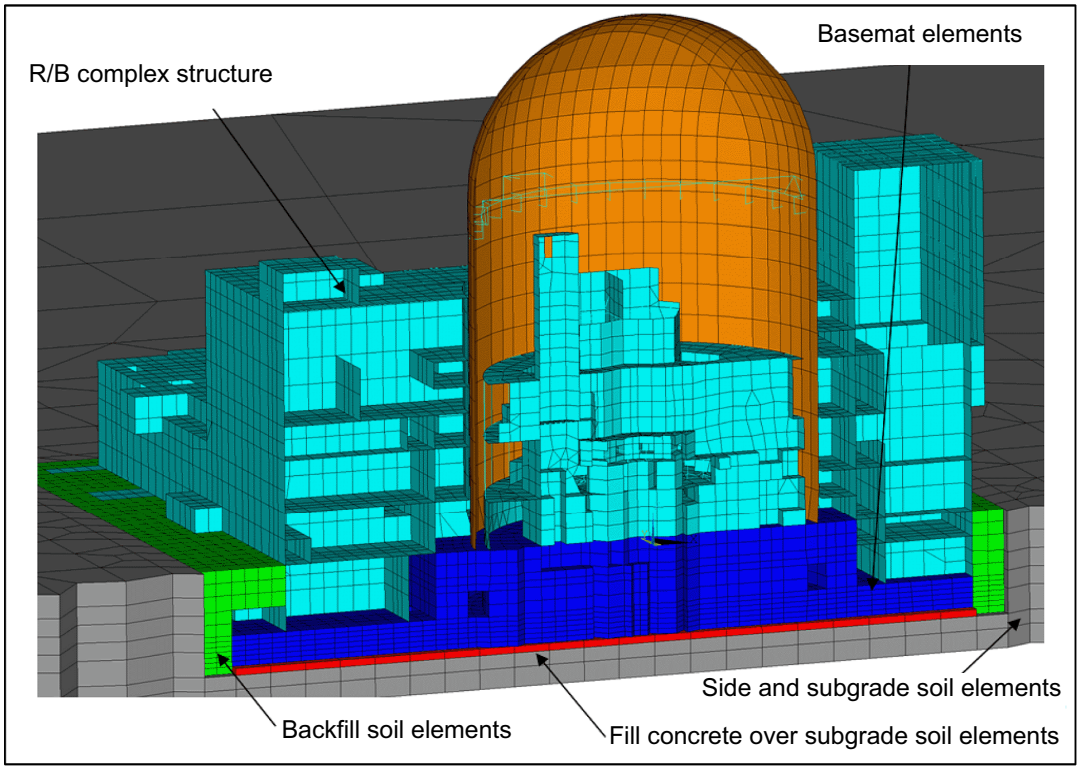

Figure 3L-24 Structural Model of Basemat and R/B Complex Superstructure

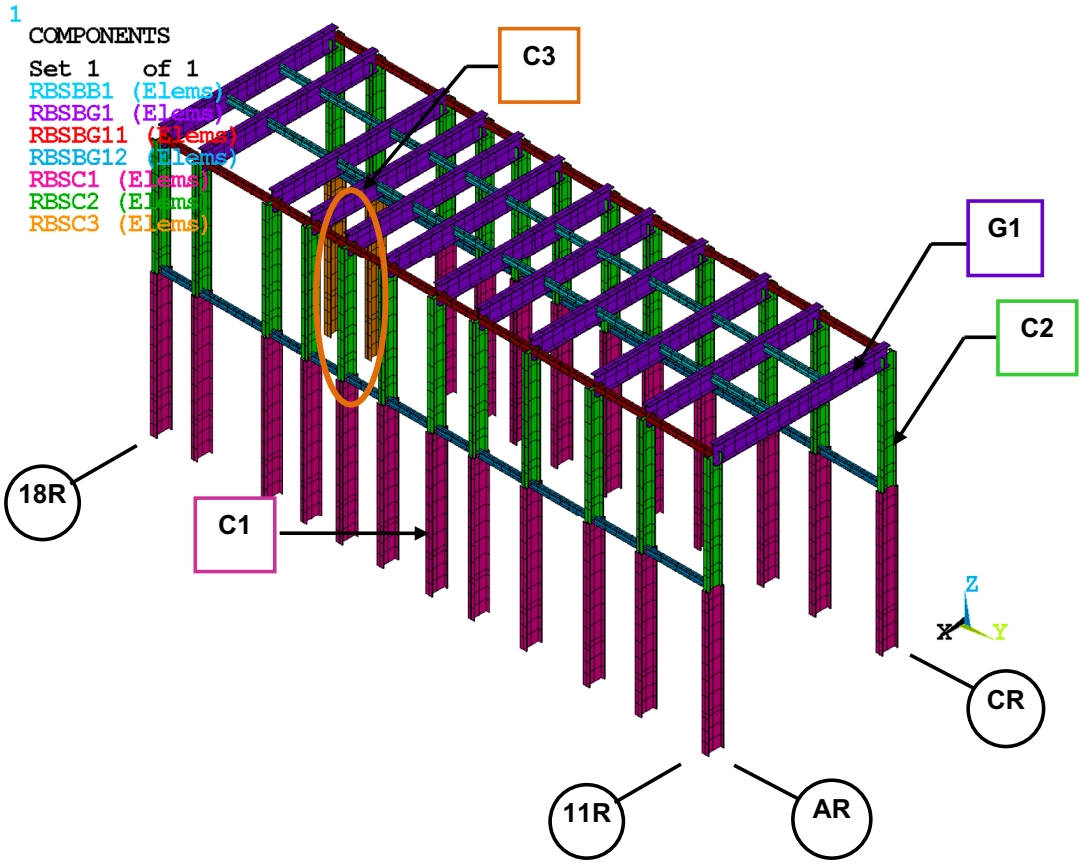

Figure 3L-25 Fuel Handling Area Steel Girders and Columns-Isometric

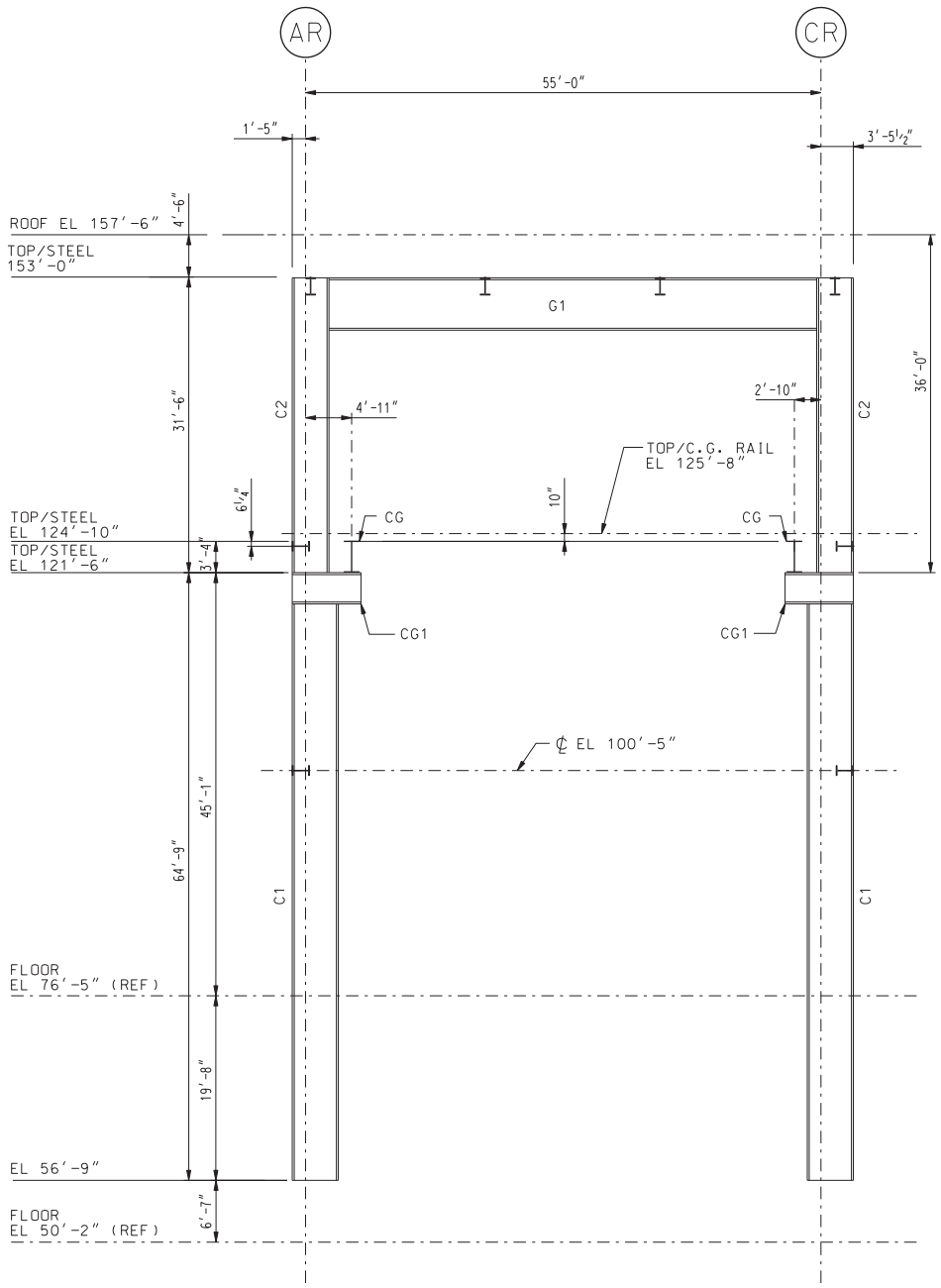

Figure 3L-26 Fuel Handling Area Steel Design Configuration-Section

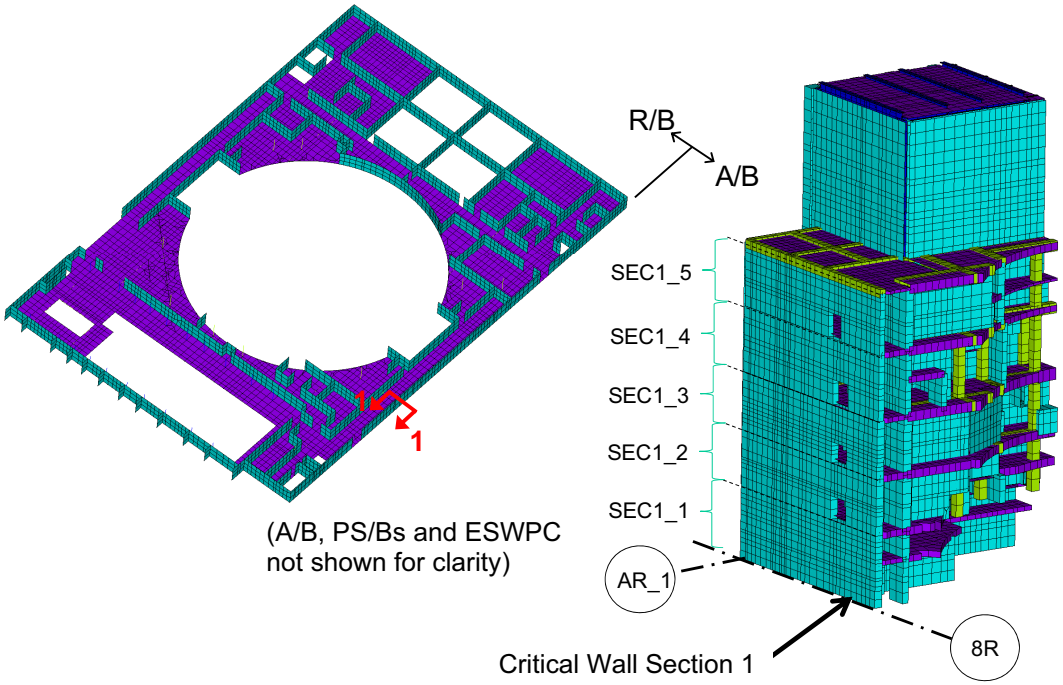

Figure 3L-27 R/B Critical Section 1 – Isometric View

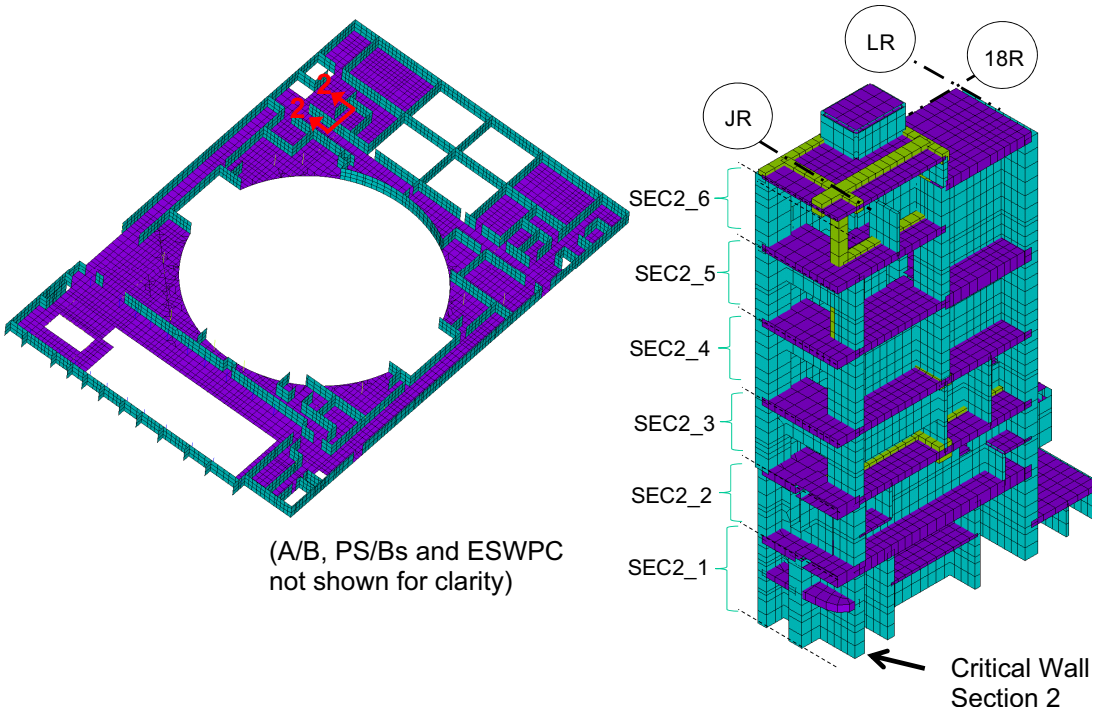

Figure 3L-28 R/B Critical Section 2 – Isometric View

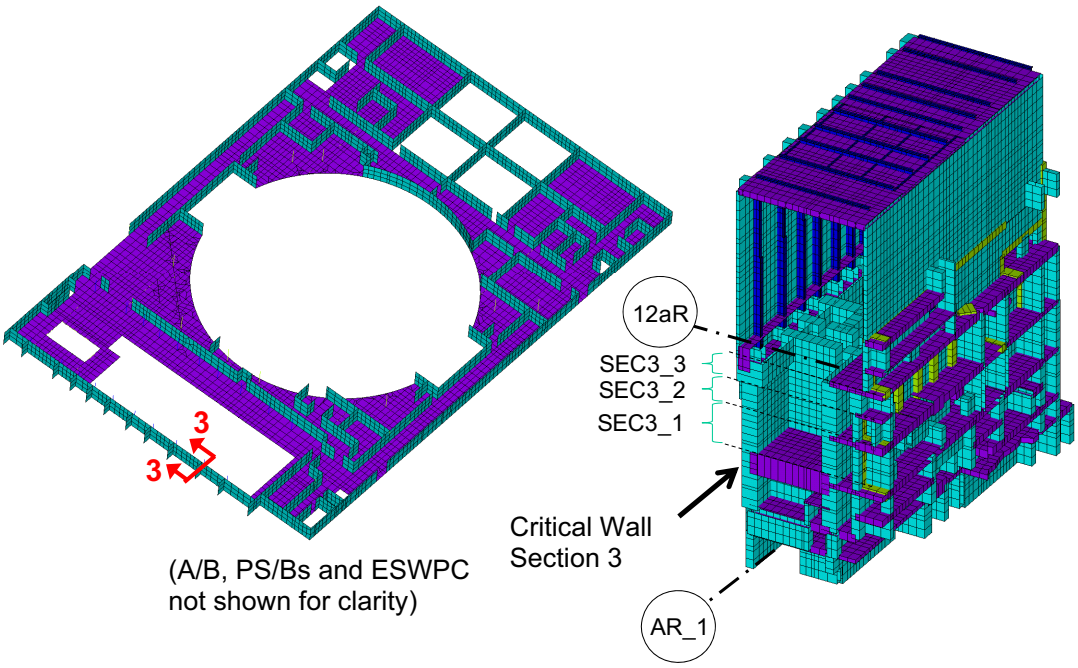

Figure 3L-29 R/B Critical Section 3 – Isometric View

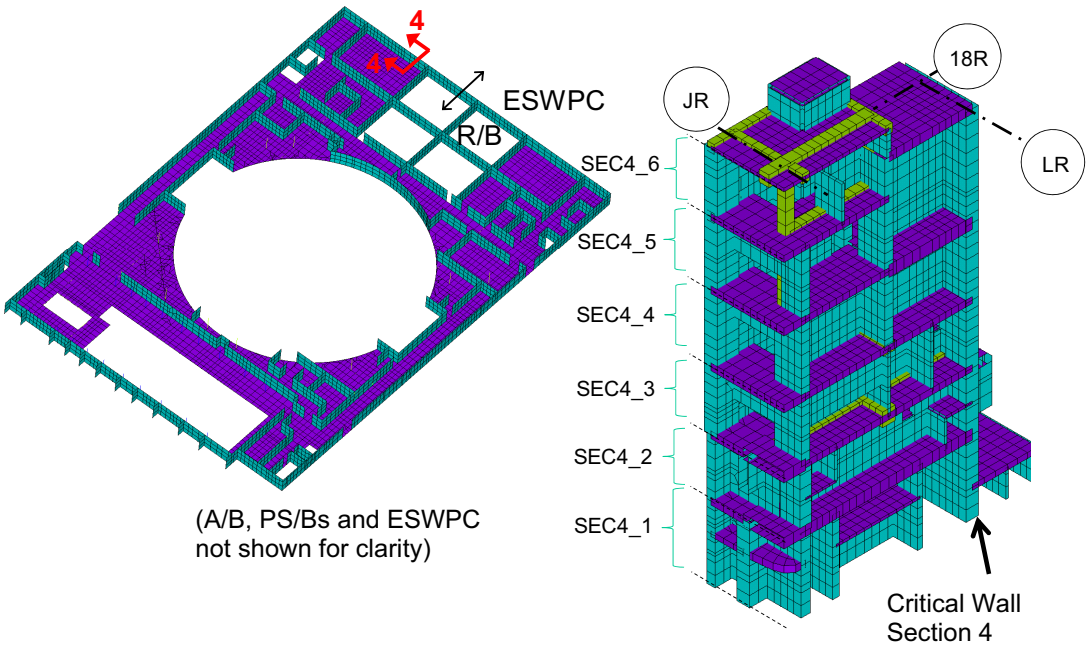

Figure 3L-30 R/B Critical Section 4 – Isometric View

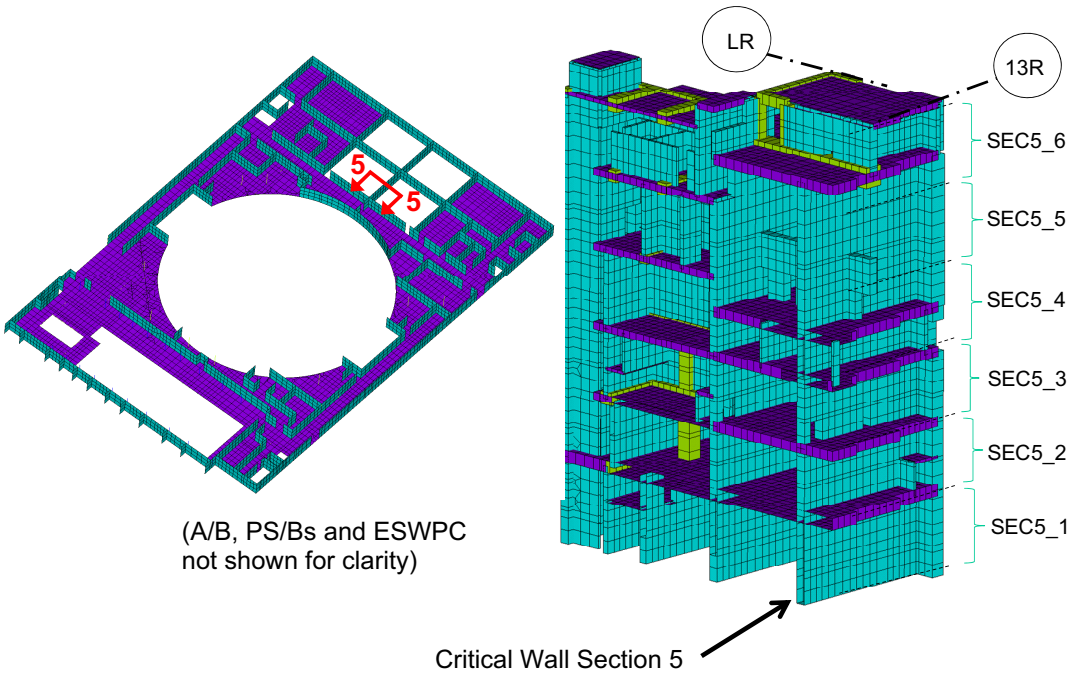

Figure 3L-31 R/B Critical Section 5 – Isometric View

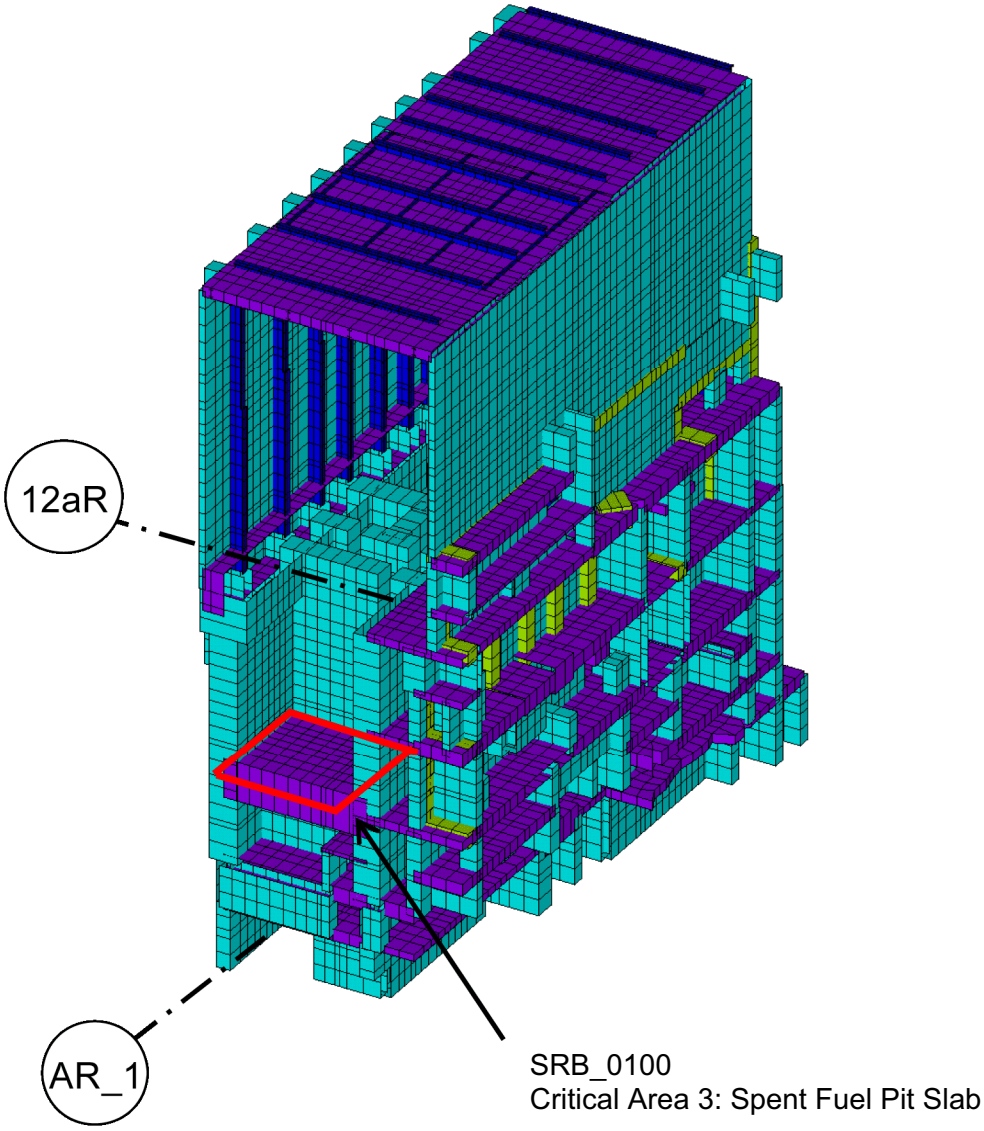

Figure 3L-32 R/B Critical Area 3 – Isometric View

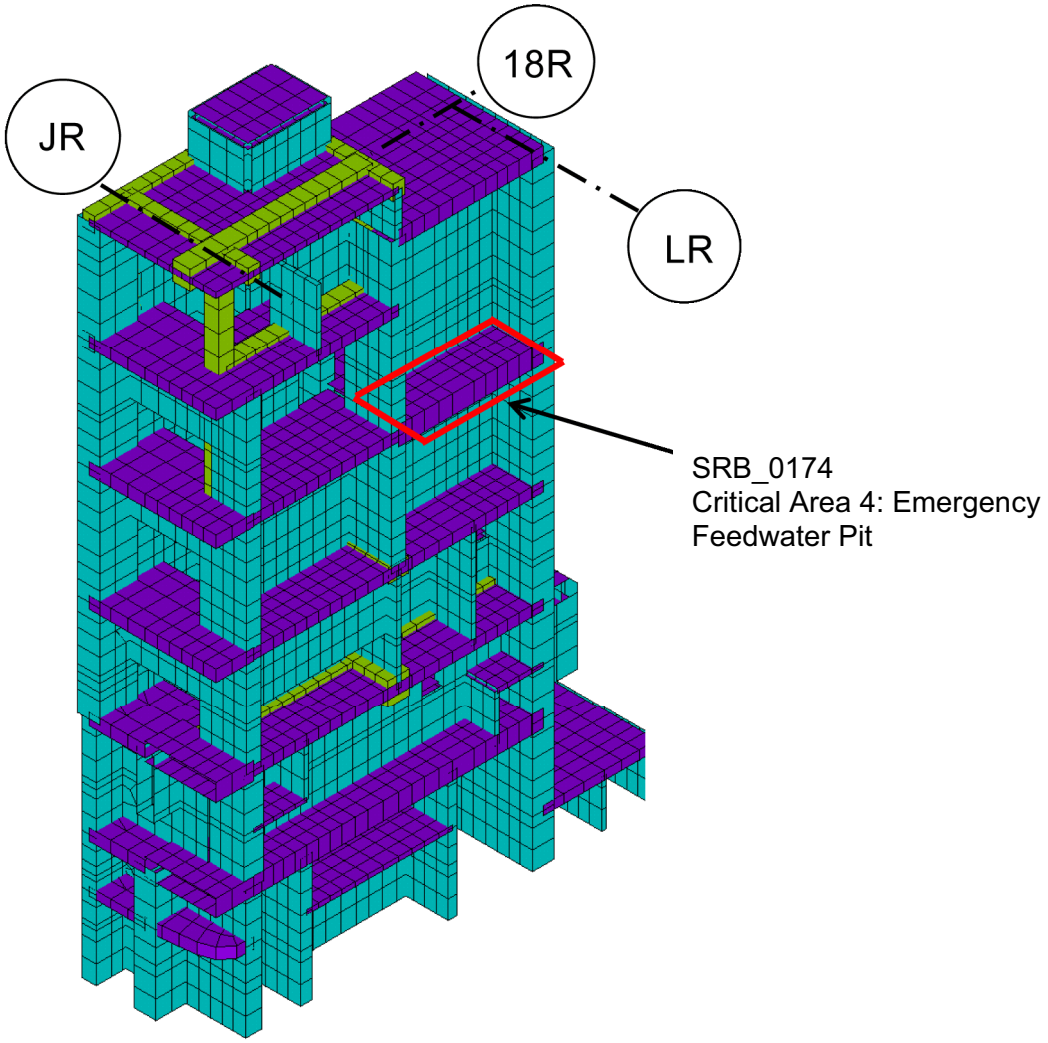

Figure 3L-33 R/B Critical Area 4 – Isometric View

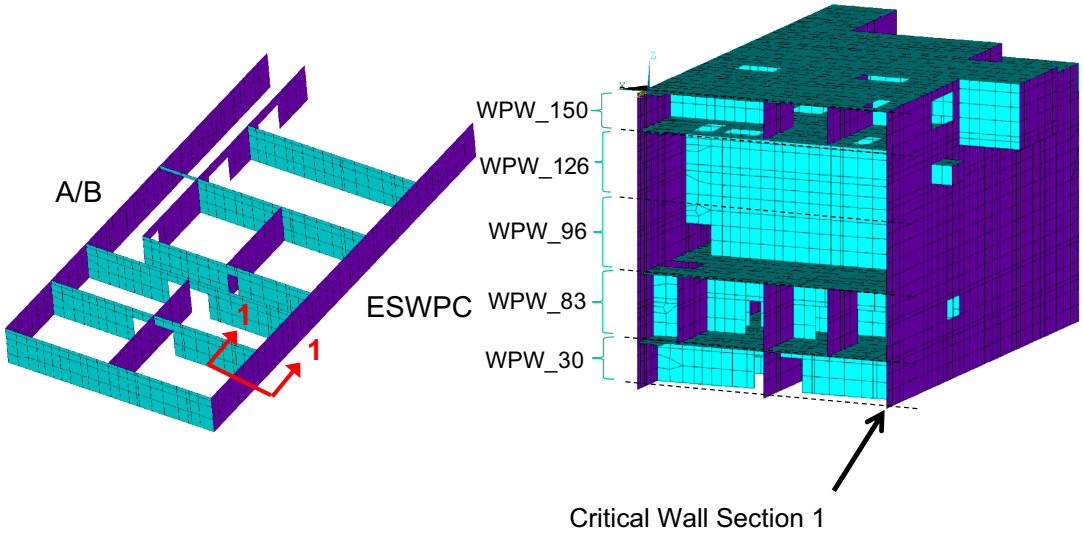

Figure 3L-34 West PS/B Critical Section 1 – Isometric View

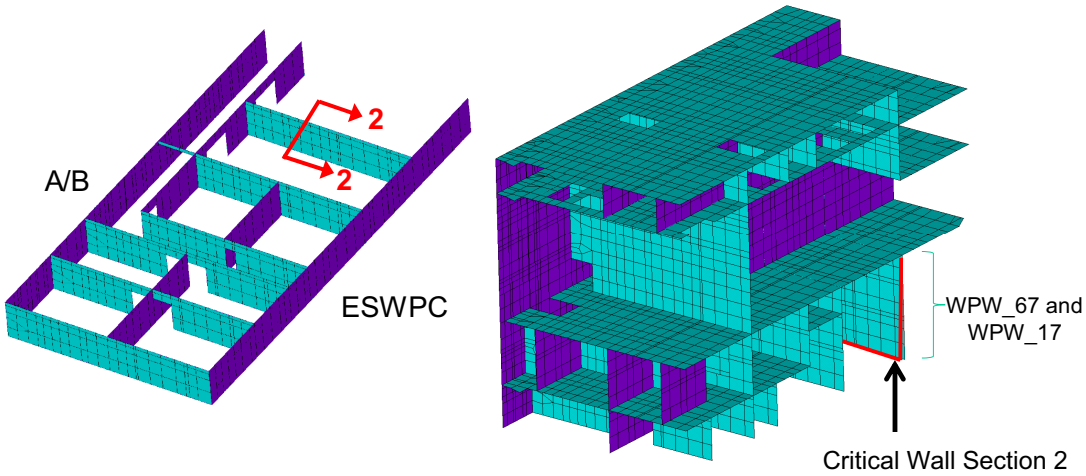

Figure 3L-35 West PS/B Critical Section 2 – Isometric View

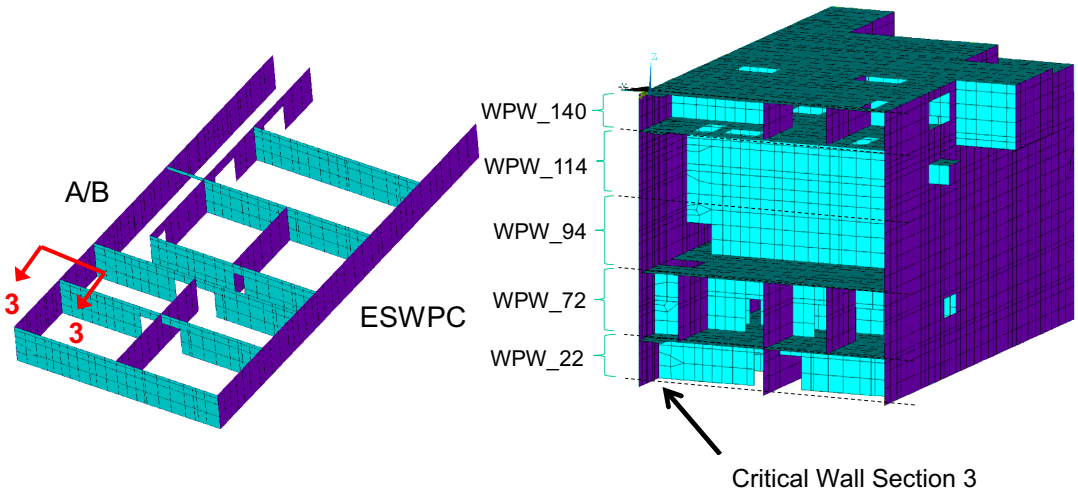

Figure 3L-36 West PS/B Critical Section 3 – Isometric View

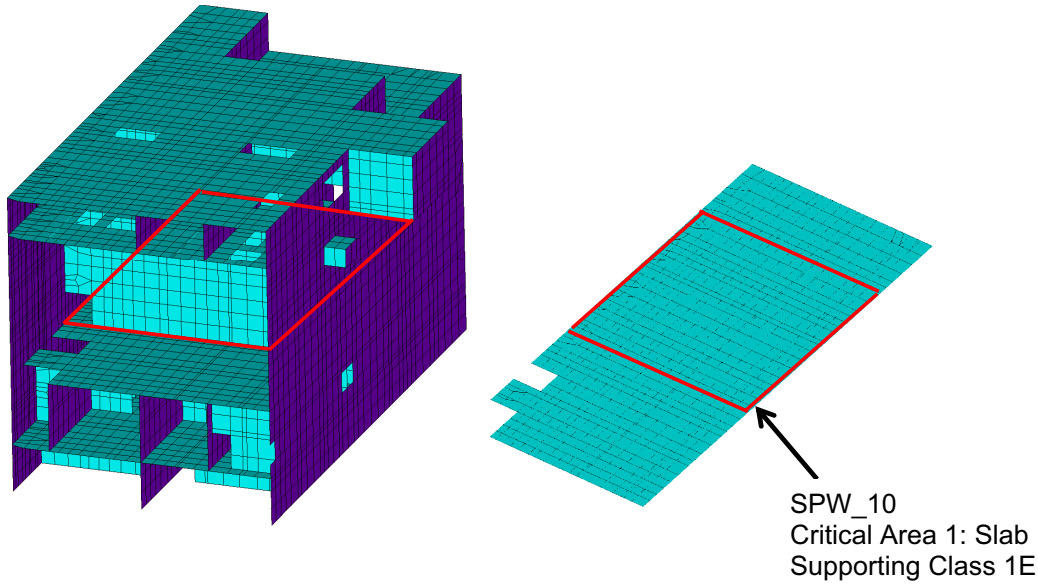

Figure 3L-37 West PS/B Critical Area 1 – Isometric View

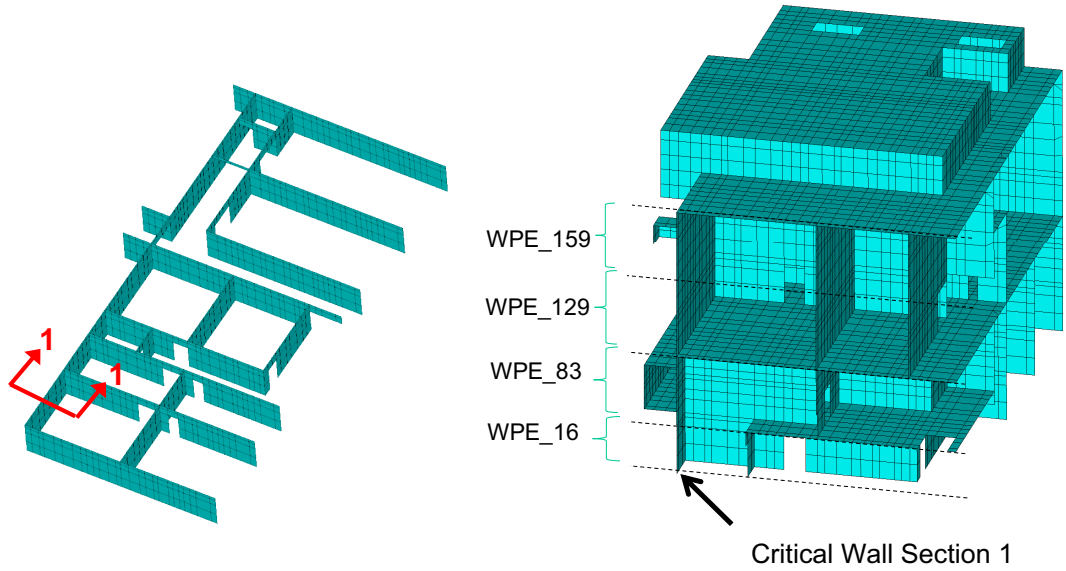

Figure 3L-38 East PS/B Critical Section 1 – Isometric View

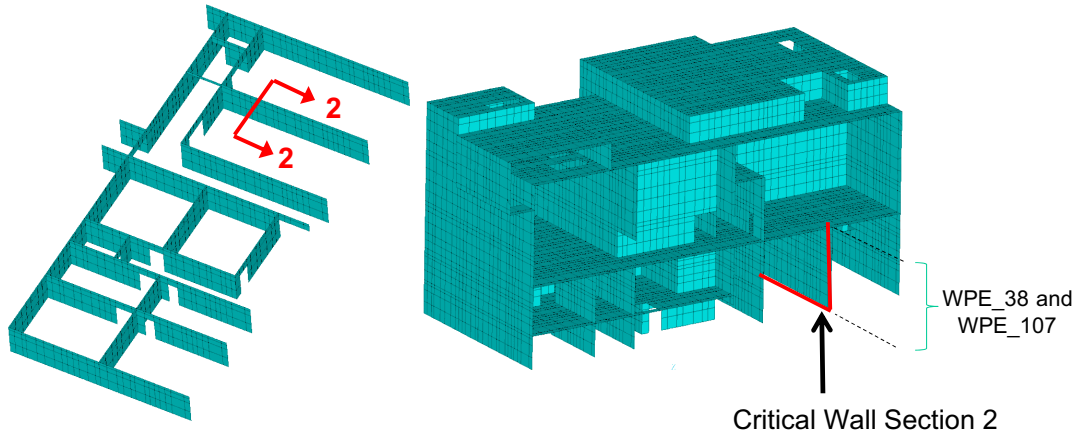

Figure 3L-39 East PS/B Critical Section 2 – Isometric View

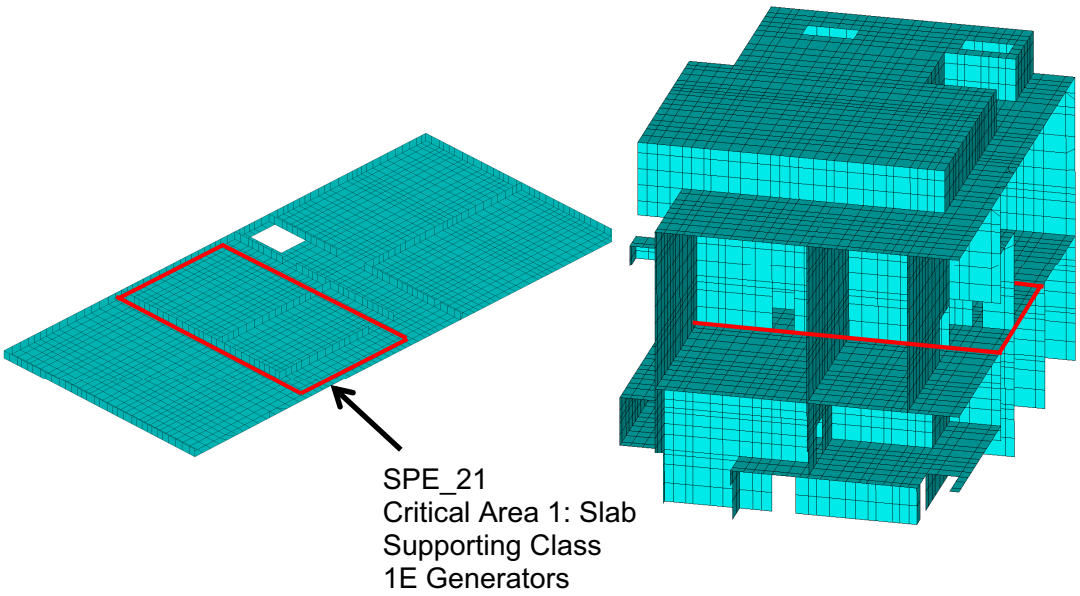

Figure 3L-40 East PS/B Critical Area 1 – Isometric View

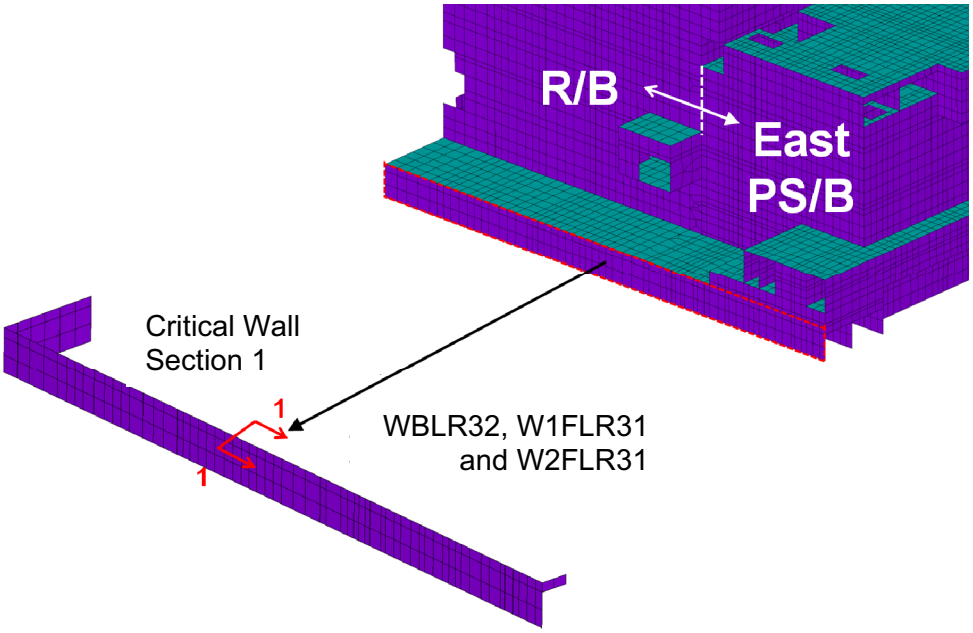

Figure 3L-41 ESWPC Critical Section 1 – Isometric View

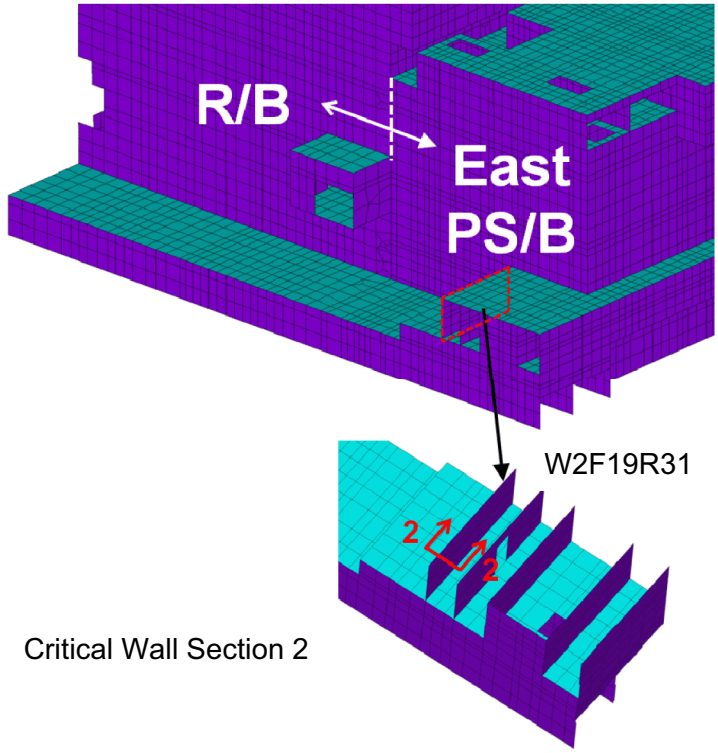

Figure 3L-42 ESWPC Critical Section 2 – Isometric View

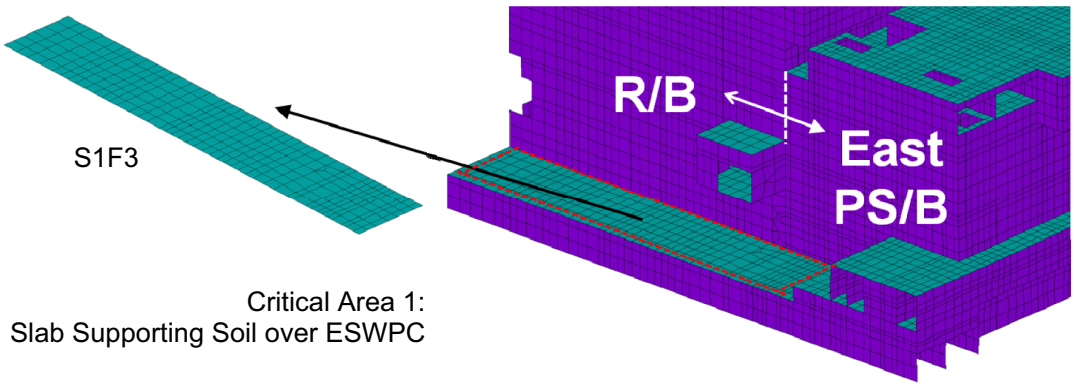

Figure 3L-43 ESWPC Critical Slab Area 1 – Isometric View

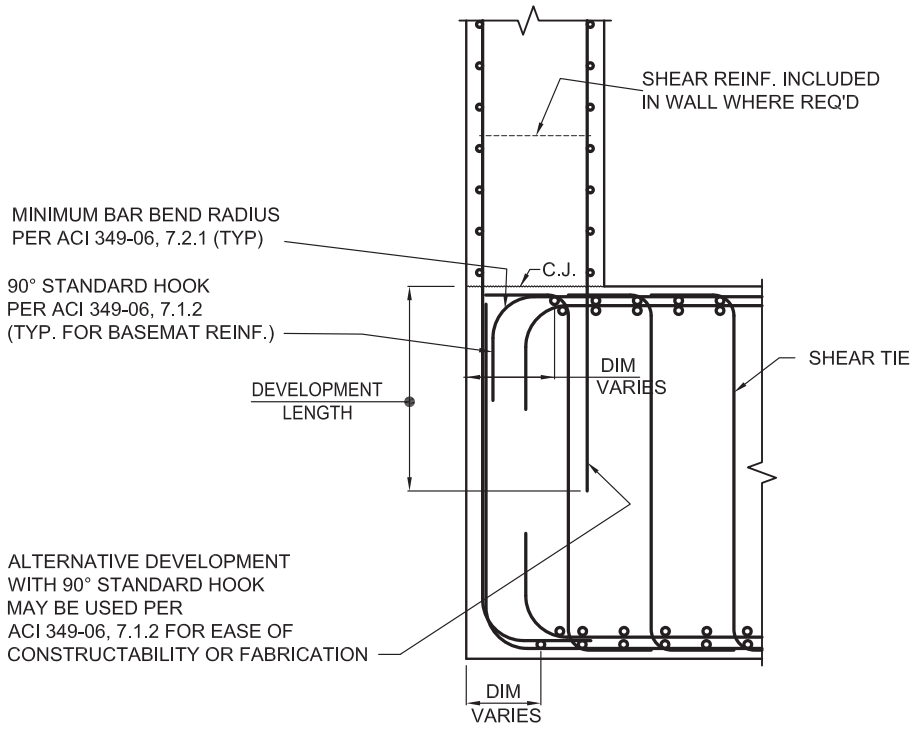

Figure 3L-44 Wall to Basemat Connection Detail

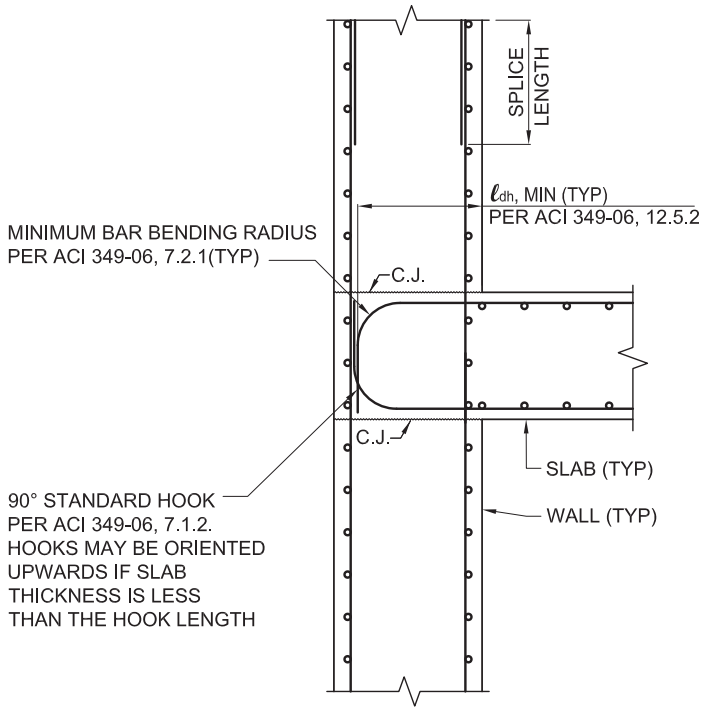

Figure 3L-45 Slab to Wall Connection Detail (A)

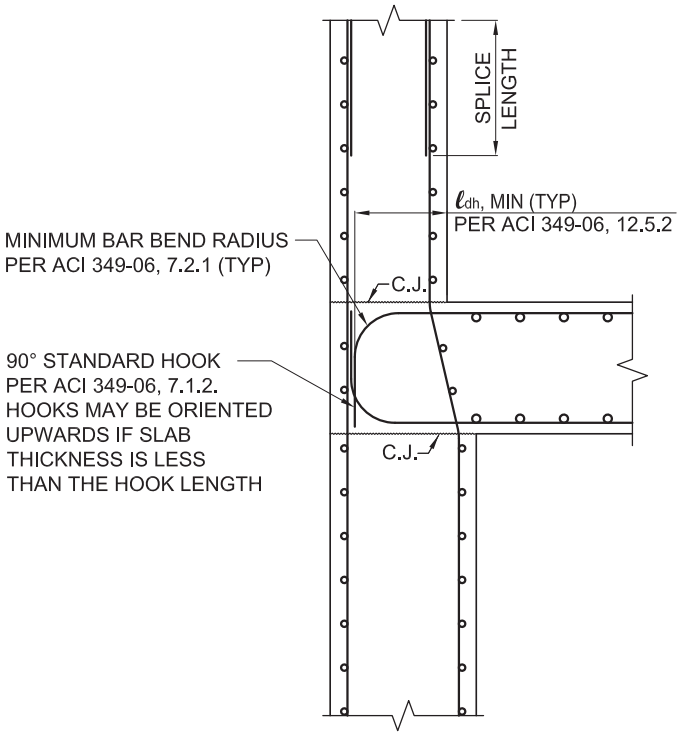

Figure 3L-46 Slab to Wall Connection Detail (B)

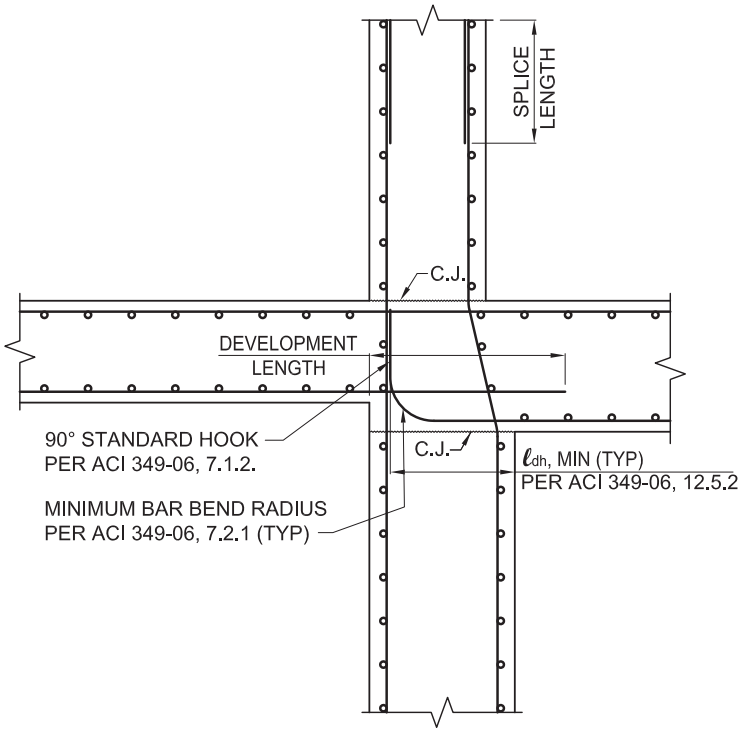

Figure 3L-47 Slab to Wall Connection Detail (C)

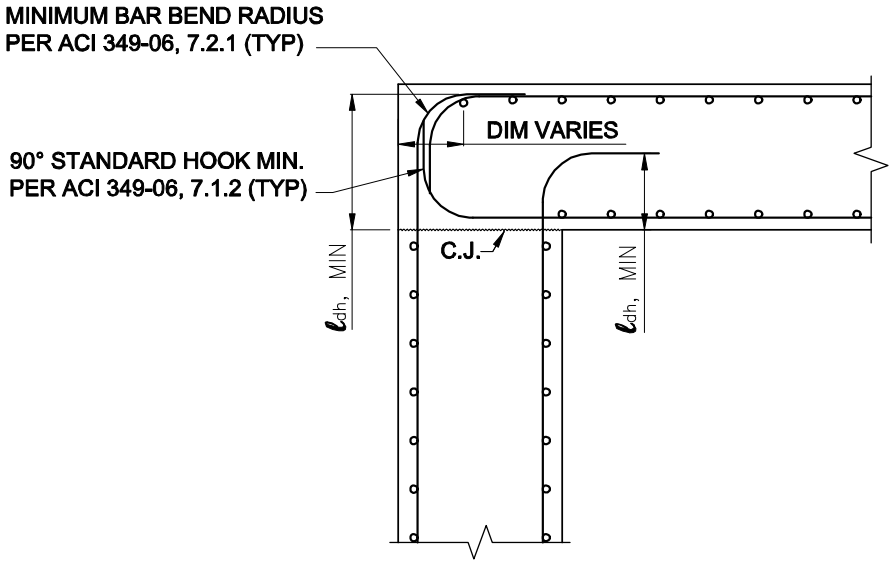

Figure 3L-48 Slab to Wall Connection Detail (D)

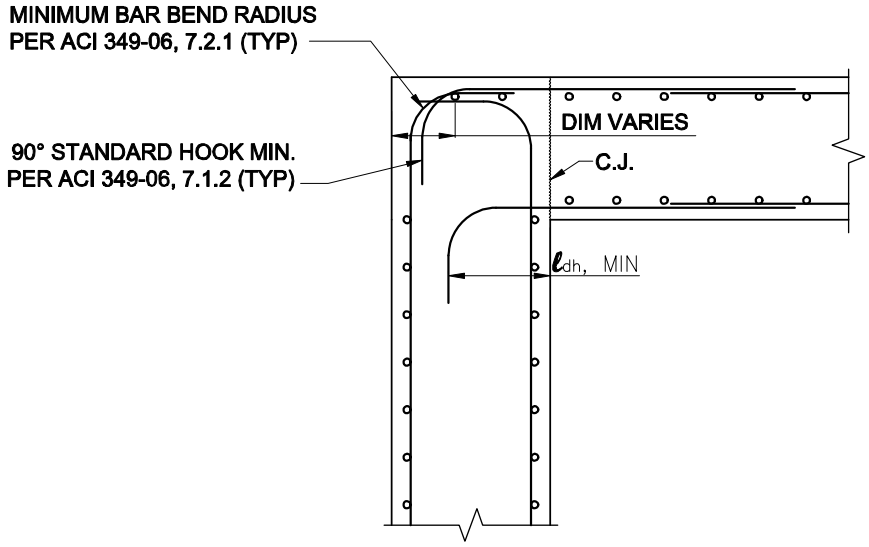

Figure 3L-49 Slab to Wall Connection Detail (E)

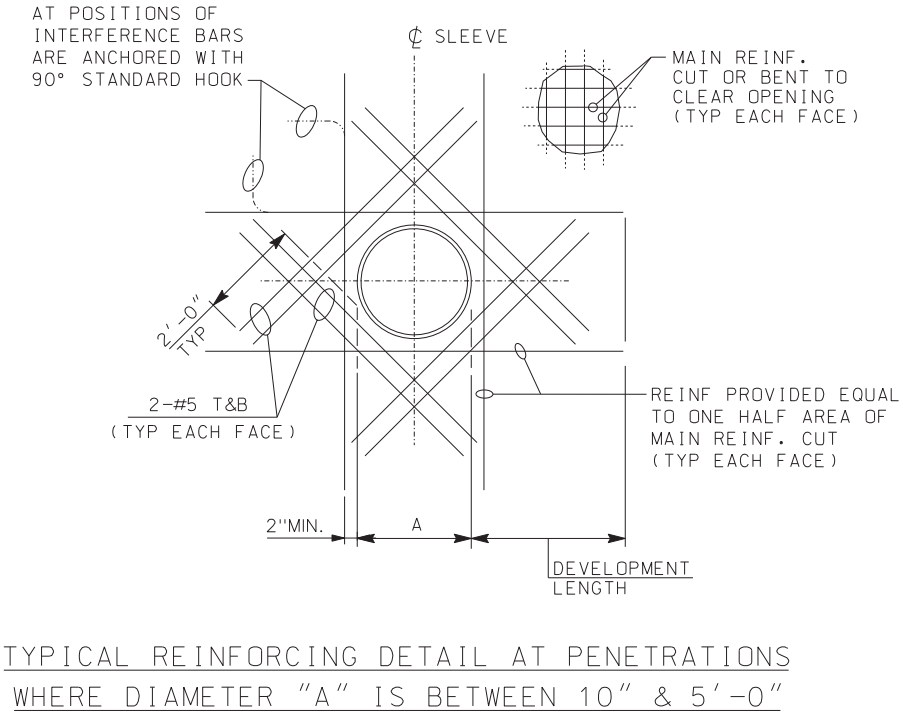

Note: Final reinforcement configuration details may vary and are subject to changes necessary for fabrication and/or constructability.

Figure 3L-50 Typical Reinforcing Details at Penetrations

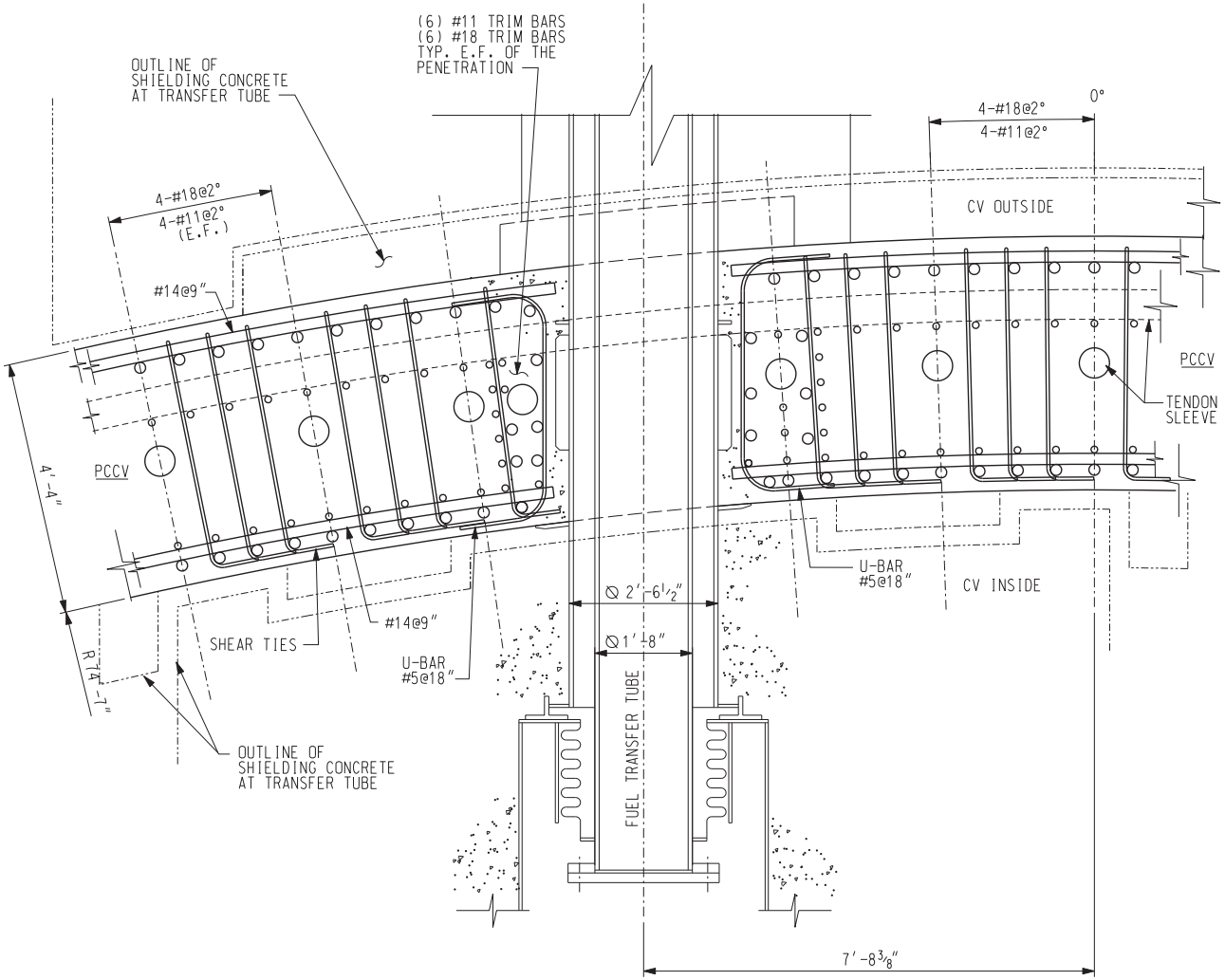

Note: Final reinforcement configuration details may vary and are subject to changes necessary for fabrication and/or constructability.

Figure 3L-51 Representative Reinforcing Detail at Fuel Transfer Tube at PCCV

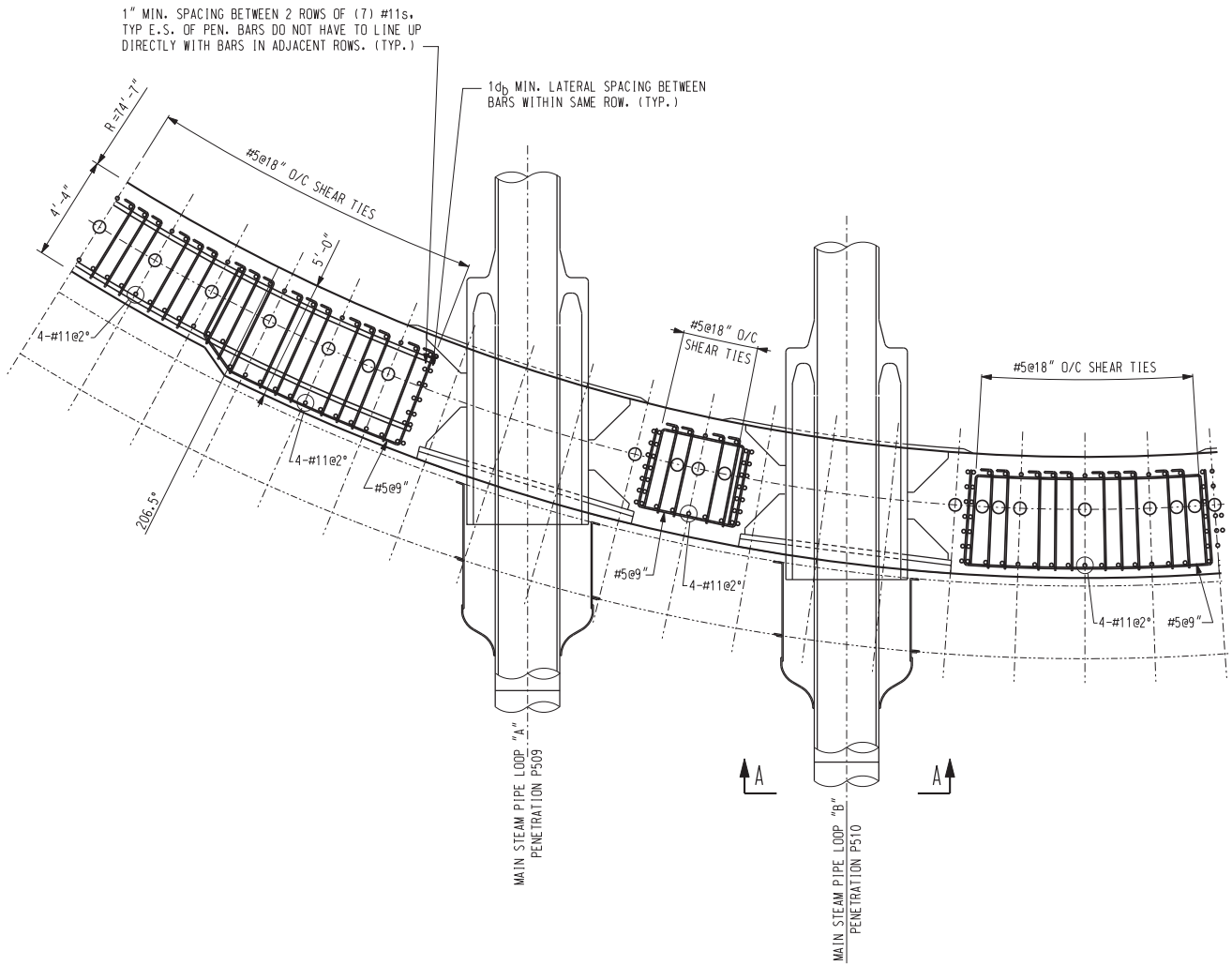

Note: Final reinforcement configuration details may vary and are subject to changes necessary for fabrication and/or constructability.

Figure 3L-52 Representative Reinforcing Detail at MS Penetrations at PCCV

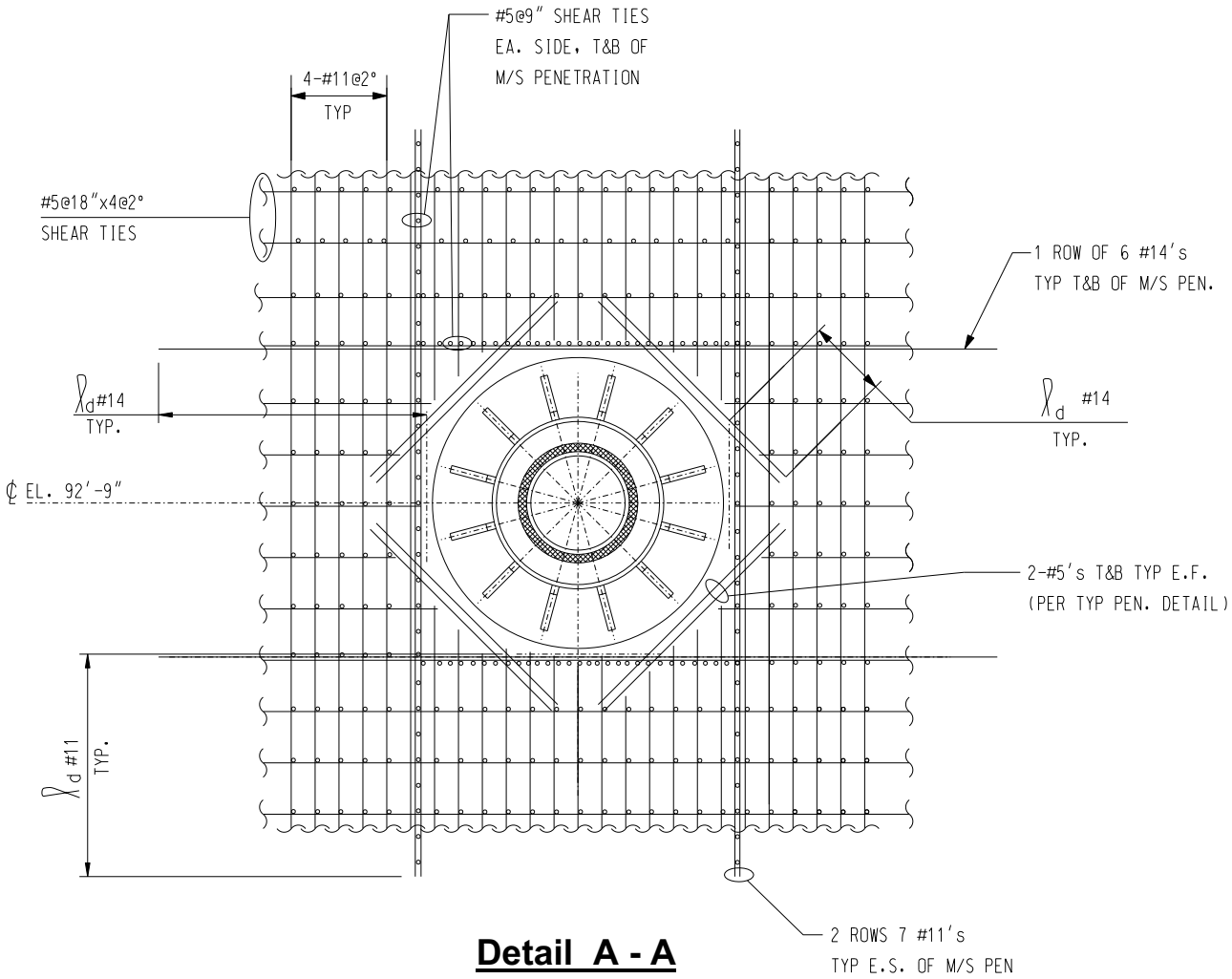

Note: Final reinforcement configuration details may vary and are subject to changes necessary for fabrication and/or constructability.

Figure 3L-53 Elevation of Peripheral Reinforcing Steel (Ties) at MS Penetrations