Omaha Public Power District
444 South 16th Street Mall
Omaha, NE 68102-2247

LIC-13-0129
September 12, 2013

U.S. Nuclear Regulatory Commission
Attn: Document Control Desk
Washington, DC 20555-0001

Fort Calhoun Station, Unit No. 1
Renewed Facility Operating License No. DPR-40
NRC Docket No. 50-285

References: See Reference List on Page 3

SUBJECT: Safe Shutdown Analysis (SSA) RAI Response - NFPA-805 Transition (ME7244)

The Omaha Public Power District's (OPPD's) response to the Nuclear Regulatory Commission's (NRC's) request for additional information (RAI) regarding the safe shutdown analysis (SSA) is provided in the attachments to this letter. As noted in the Reference 11 email, this RAI is from the second set of the third round of RAIs regarding the license amendment request (LAR) to adopt National Fire Protection Association (NFPA) 805 at the Fort Calhoun Station (FCS). OPPD agreed to provide a response to this RAI by September 13, 2013.

In the Reference 1 LAR, OPPD requested an amendment to Renewed Facility Operating License No. DPR-40 for FCS, Unit No. 1, to adopt NFPA 805, *Performance-Based Standard for Fire Protection for Light Water Reactor Generating Plants (2001 Edition)*. The NRC staff reviewed OPPD's application and determined that additional information was required in order to complete their review and subsequently transmitted RAIs via References 2, 6 and 9. OPPD provided responses to these RAIs in References 3, 4, 5, 7, 8, and 10. The NRC indicated that the staff had reviewed the information provided by the licensee [in References 3, 4, 5, 7, 8, and 10] and determined that additional information specified in the Reference 11 email is needed for the staff to complete its review.

In Reference 11, the NRC notified OPPD that additional information is required in order to complete its review. Attachments 1 and 2 of this submittal contain the response to the Safe Shutdown Analysis (SSA) RAI 17.01, which OPPD agreed to provide by September 13, 2013. As noted in Reference 11, a response to the RAIs listed below will be provided in accordance with the following schedule:

- PRA RAIs 01.i.02, 01.j.02, 01.j.03, 23.01, and 27 responses to be provided by October 7, 2013.
- PRA RAIs 07.02, 19.01, 24, 25, and 26 responses to be provided by November 6, 2013.

There are no new regulatory commitments being made in this letter as a result of the enclosed NFPA 805 RAI responses. Please note, as indicated in References 3, 4, 7, 8, and 10, OPPD plans to supplement the NFPA 805 transition LAR, which will reflect the applicable information delineated in the enclosed RAI responses. The LAR supplement is being tracked by AR 48249.

In accordance with 10 CFR 50.91, a copy of this letter, without the attachments, is being provided to the designated State of Nebraska official.

If you should have any questions regarding this submittal or require additional information, please contact Mr. Bill R. Hansher, Supervisor-Nuclear Licensing, at 402-533-6894.

I declare under penalty of perjury that the foregoing is true and correct. Executed on September 12, 2013.

Louis P. Cortopassi
Site Vice President and CNO

LPC/BJV/mle

Attachments: 1. Response to SSA RAI 17.01
2. Circuit Design Sketch and Description of Design Option 1

c: S. A. Reynolds, Acting NRC Regional Administrator, Region IV
J. W. Sebrosky, NRC Senior Project Manager
L. E. Wilkins, NRC Project Manager
J. C. Kirkland, NRC Senior Resident Inspector
Manager Radiation Control Program, Nebraska Health & Human Services, R & L Public Health Assurance, State of Nebraska (w/out attachments)

Reference List

1. Letter from OPPD (J. A. Reinhart) to NRC (Document Control Desk), *License Amendment Request 10-07, Proposed Changes to Adopt NFPA 805, Performance-Based Standard for Fire Protection for Light Water Reactor Generating Plants (2001 Edition) at Fort Calhoun Station*, dated September 28, 2011 (LIC-11-0099) (ML112760660)
2. Letter from the NRC (L. E. Wilkins) to OPPD (David J. Bannister), *Fort Calhoun Station, Unit No.1 - Request for Additional Information Re: License Amendment Request to Adopt National Fire Protection Agency Standard NFPA 805 (TAC No. ME7244)*, dated April 26, 2012 (NRC-12-0041) (ML121040048)
3. Letter from OPPD (D. J. Bannister) to NRC (Document Control Desk), *Responses to Requests for Additional Information Re: License Amendment Request 10-07 to Adopt NFPA 805, "Performance-Based Standard for Fire Protection for Light Water Reactor Generating Plants," 2001 Edition, at Fort Calhoun Station*, dated July 24, 2012 (LIC-12-0083) (ML12208A131)
4. Letter from OPPD (D. J. Bannister) to NRC (Document Control Desk), *Responses to Requests for Additional Information Re: License Amendment Request 10-07 to Adopt NFPA 805, "Performance-Based Standard for Fire Protection for Light Water Reactor Generating Plants," 2001 Edition, at Fort Calhoun Station*, dated August 24, 2012 (LIC-12-0120) (ML12240A151)
5. Letter from OPPD (L. P. Cortopassi) to NRC (Document Control Desk), *Responses to Requests for Additional Information Re: License Amendment Request 10-07 to Adopt NFPA 805, "Performance-Based Standard for Fire Protection for Light Water Reactor Generating Plants," 2001 Edition, at Fort Calhoun Station*, September 27, 2012 (LIC-12-0135) (ML12276A046)
6. Email from NRC (L. E. Wilkins) to OPPD (D. L. Lippy), *DRAFT: Fort Calhoun NFPA 805, Second Round (ME7244)*, dated February 22, 2013 (NRC-13-0014)
7. Letter from OPPD (M. J. Prospero) to NRC (Document Control Desk), *Responses to Second Request for Additional Information Re: License Amendment Request to Adopt NFPA 805 at Fort Calhoun Station (TAC No. ME7244)*, dated April 23, 2013 (LIC-13-0033)
8. Letter from OPPD (L. P. Cortopassi) to NRC (Document Control Desk), *Remaining Responses to Second Request for Additional Information Re: License Amendment Request to Adopt NFPA 805 at Fort Calhoun Station (TAC No. ME7244)*, dated May 21, 2013 (LIC-13-0060)
9. Email from NRC (J. M. Sebrosky) to OPPD (D. L. Lippy), *Fort Calhoun NFPA 805, Third Round of RAIs (ME7244)*, dated June 27, 2013 (NRC-13-0081)
10. Letter from OPPD (L. P. Cortopassi) to NRC (Document Control Desk), *Responses to Third Request for Additional Information Regarding License Amendment Request to Adopt NFPA 805 at Fort Calhoun Station (TAC No. ME7244)*, dated July 29, 2013 (LIC-13-0096)
11. Email from NRC (L. E. Wilkins) to OPPD (D. L. Lippy), *Fort Calhoun NFPA 805, Third Round, Second Part, of RAIs (ME7244)*, dated August 14, 2013 (NRC-13-0102)

Omaha Public Power District (OPPD)
Response to Safe Shutdown Analysis (SSA) RAI 17.01
License Amendment Request to Adopt National Fire Protection Association Standard 805
Performance-Based Standard for Fire Protection for Light Water Reactor Generating Plants
at Fort Calhoun Station, Unit 1 (TAC No. ME7244)

By letter dated September 28, 2011 (Agencywide Documents Access and Management System (ADAMS) Accession No. ML112760660), as supplemented by letters dated December 19 and 22, 2011, and March 20, 2012 (ADAMS Accession Nos. ML113540334, ML11363A077, and ML12083A147, respectively), Omaha Public Power District, (the Licensee), submitted a license amendment request (LAR) to transition their fire protection licensing basis at the Fort Calhoun Station, Unit 1, from Title 10 of the Code of Federal Regulations (CFR), Section 50.48(b), to 10CFR50.48(c), National Fire Protection Association Standard NFPA 805 (NFPA 805). A review team, consisting of U.S. Nuclear Regulatory Commission (NRC) staff and contractors from Pacific Northwest National Laboratory (PNNL) and the Center for Nuclear Waste Regulatory Analyses (CNWRA) participated in a regulatory audit of Fort Calhoun in Blair, NE from March 5 -9, 2012. By letter dated April 26, 2012, (ADAMS Accession No. ML12198A406) the NRC issued requests for additional information (RAIs). By letters dated July 24, 2012 (ADAMS Accession No. ML12208A131), August 24,2012 (ADAMS Accession No. ML12240A151), and September 27,2012 (ADAMS Accession No. ML12276A046) the licensee provided responses to the RAIs. The NRC staff reviewed the information provided by the licensee in response to the first set of RAIs and determined that additional information was needed for the staff to complete its evaluation. Consequently, the staff issued a second round of RAIs on February 22, 2013, (ADAMS Accession No. ML13053A226) and a third round of RAIs on June 27, 2013 (ADAMS Accession No. ML13178A035). The licensee responded to these RAIs in letters dated April 23, 2013 (ADAMS Accession No. ML13116A015), May 21, 2013 (ADAMS Accession No. ML13144A814), and July 29, 2013 (ADAMS Accession No. ML13211A055).

The U.S. NRC staff has reviewed the information provided in your application and determined that additional information is required in order to complete its review. These RAIs can be found below. The NRC considers these RAIs to be the second set of the third round of RAIs. Based on discussions with you on August 13, 2013, it was agreed that a response to the RAIs found below will be provided in accordance with the following schedule:

- **Safe Shutdown Analysis (SSA) RAI response to be provided by September 13, 2013**
- **PRA RAIs 01.i.02, 01.j.02, 01.j.03, 23.01, and 27 responses to be provided by October 7, 2013**
- **PRA RAIs 07.02, 19.01, 24, 25, and 26 responses to be provided by November 6, 2013.**

In addition, as discussed with you during the August 13, 2013, phone call the staff has determined that you no longer need to provide a response to SSA RAI 07.01 that was issued to you on June 27, 2013 (ADAMS Accession No. ML13178A035). The staff determined that SSA RAI 07.01 response is not needed in order for the staff to complete its safety evaluation. The staff also discussed with you during the August 13, 2013, phone call that the response to PRA RAI 24 should include two additional sensitivity studies as a result of issues that were raised during a July 22 through July 24, inspection at your site.

Should the NRC determine that the RAIs found below are no longer necessary prior to the dates found above, the request will be withdrawn. If circumstances result in the need to revise the requested response date, please contact me or Joe Sebrosky.

SSA RAI 17.01

License Amendment Request, Attachment S, Table S-2, "Plant Modifications Committed," Item REC-117, states:

> **"Modification to change the normal operating alignment for 480 V load center tie breakers BT-1B4A, BT-1B3B, and BT-1B4C from normally open and racked-in, to normally racked-out (or otherwise disabled from spuriously closing due to fire damage to DC breaker control circuits in the opposite Train 4kV switchgear room, main control room, or cable spreading room). This modification addresses the issue associated with electrical failure resulting from spurious connection of out-of-synch power sources (offsite power to diesel generator, diesel generator to diesel generator)."**

It is further stated that: "The proposed modification will maintain breaker manual trip capability from main control room, protective trip, automatic load shed trip and accident signal trip for fire areas 36A, 36B, 41 and 42."

According to NRC Special Inspection Report dated March 12, 2012 (ADAMS Accession No. ML12072A128), there are interconnecting control wires (operated at 125 V DC) between 480V tie breakers in Electrical Switchgear Fire Areas 36A (East Switchgear) and 36B (West Switchgear) (typical - between breakers BT-1B3A and BT-1B4A). These wires are used in the control circuitry of the breakers. A fire in these breakers in either Switchgear Fire Area 36A or 36B can cause damage to the control wires (such as shorts to ground) in the opposite area breakers.

During a recent inspection conducted from July 22, 2013 to July 24, 2013, Office of Nuclear Reactor Regulation (NRR) reviewers questioned the plant technical staff about the potential negative impact of performing the design change (modification) to rack out the normally open cross-tie breakers on the 480VAC switchgear. Discussions with plant staff indicate that a contingency plan exists to modify the control circuit to preclude spurious closure should the modification to rack out the breaker be deemed impractical.

By letter dated September 18, 2011, the licensee stated, "...(or otherwise disabled from spuriously closing due to fire damage to the DC breaker control circuits in the opposite train 4kV switchgear room...)." The committed modification is not specified in sufficient detail for the NRC staff to determine its acceptability due to the open-ended parenthetical. Please provide a written description of the specific modification that will be implemented as part of the NFPA 805 transition as well as conceptual circuit design sketches indicating the existing portions of the circuit as well as those parts being added/modified.

<u>OPPD Response to SSA RAI 17.01</u>

A circuit design sketch and written description of the modification that will be implemented as part of the NFPA 805 transition is attached.

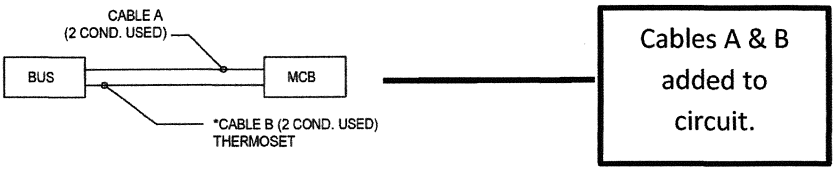

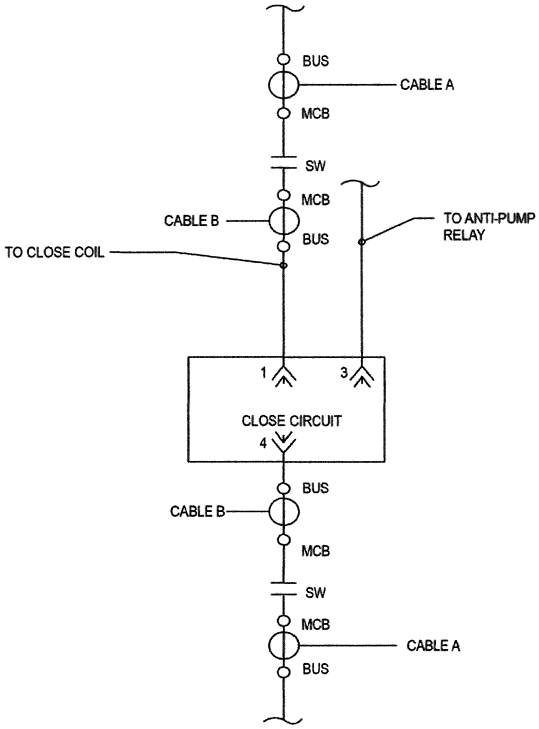

REC-117 – Proposed Design Option
Circuit modification to prevent spurious closure of normally open bus tie breaker resulting from hot shorts.

The above figure shows the proposed circuit modification to prevent spurious closure of the normally open bus tie breakers BT-1B4A, BT-1B3B, and BT-1B4C. Contacts from the existing breaker control switch (SW) will be added to the breaker close circuit to provide isolation to the close coil thereby preventing spurious breaker closure from a fire induced hot short.

This modification will allow the Main Control Room operator to electrically open or trip the associated breaker from the Main Control Room when the associated breaker control switch is taken out of the "pull-to-lock" position.

Notes:

BUS = termination at 480V Island Bus
MCB = termination at Main Control Board in Main Control Room
SW = new breaker control switch in MCB which incorporates a "pull to lock" position (contacts are break before make). Same switch taken to close will close tie breaker (close contacts not shown). Same switch taken to trip position will trip tie breaker (trip contacts not shown).
Cable B is required to be thermoset, with no other conductors utilized other than the two conductors identified above.

Reference:
11405-E-18 Sheet 3 – breaker BT-1B4A control schematic
11405-E-18 Sheet 5 – breaker BT-1B3B control schematic
11405-E-19 Sheet 1 – breaker BT-1B4C control schematic
0124B4392 Sheet 1 – G.E. schematic for breaker close circuit internal wiring