Figure 3.8-24—Temperature Gradient Through Basemat

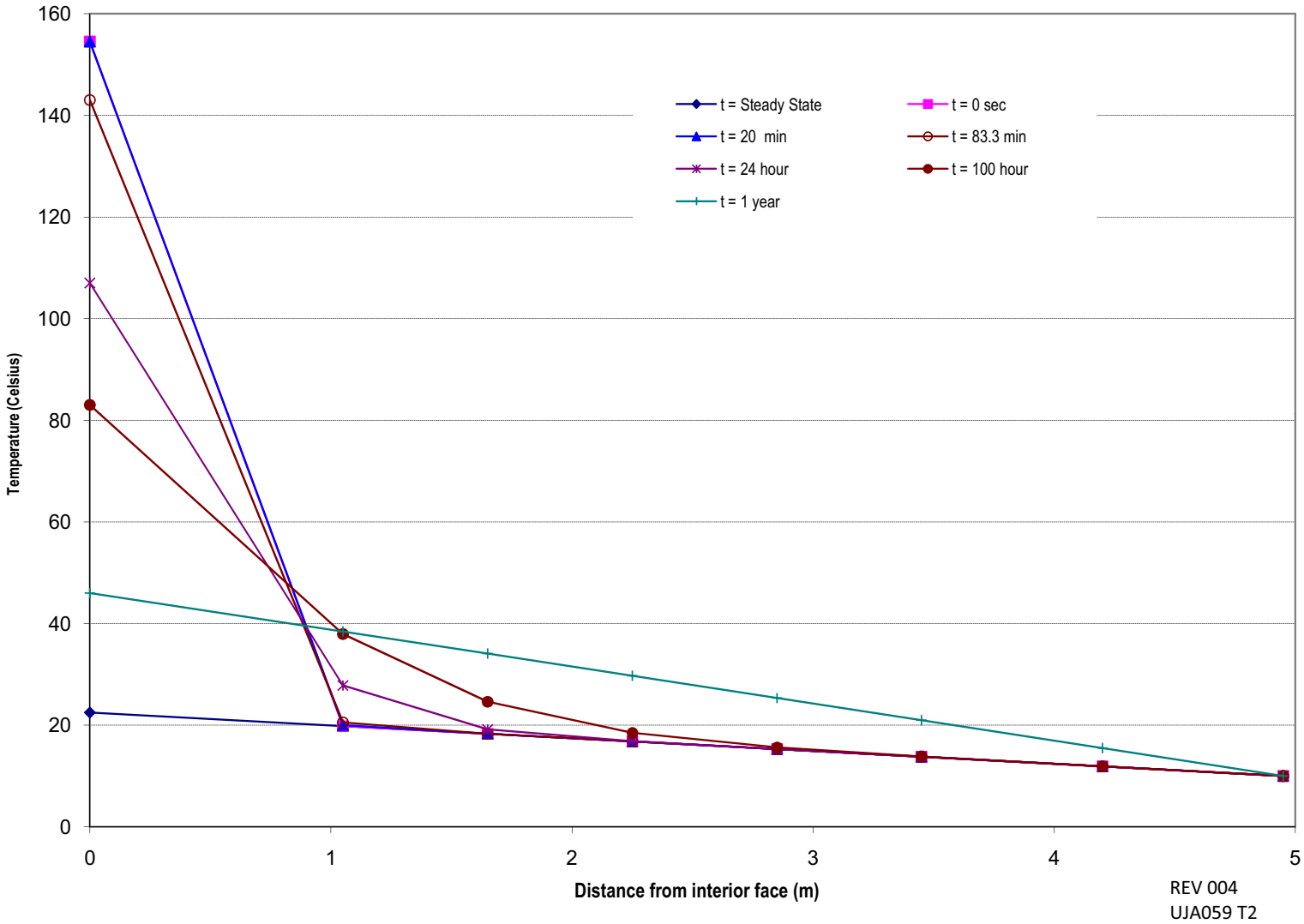

Figure 3.8-25—Equipment Hatch General Assembly

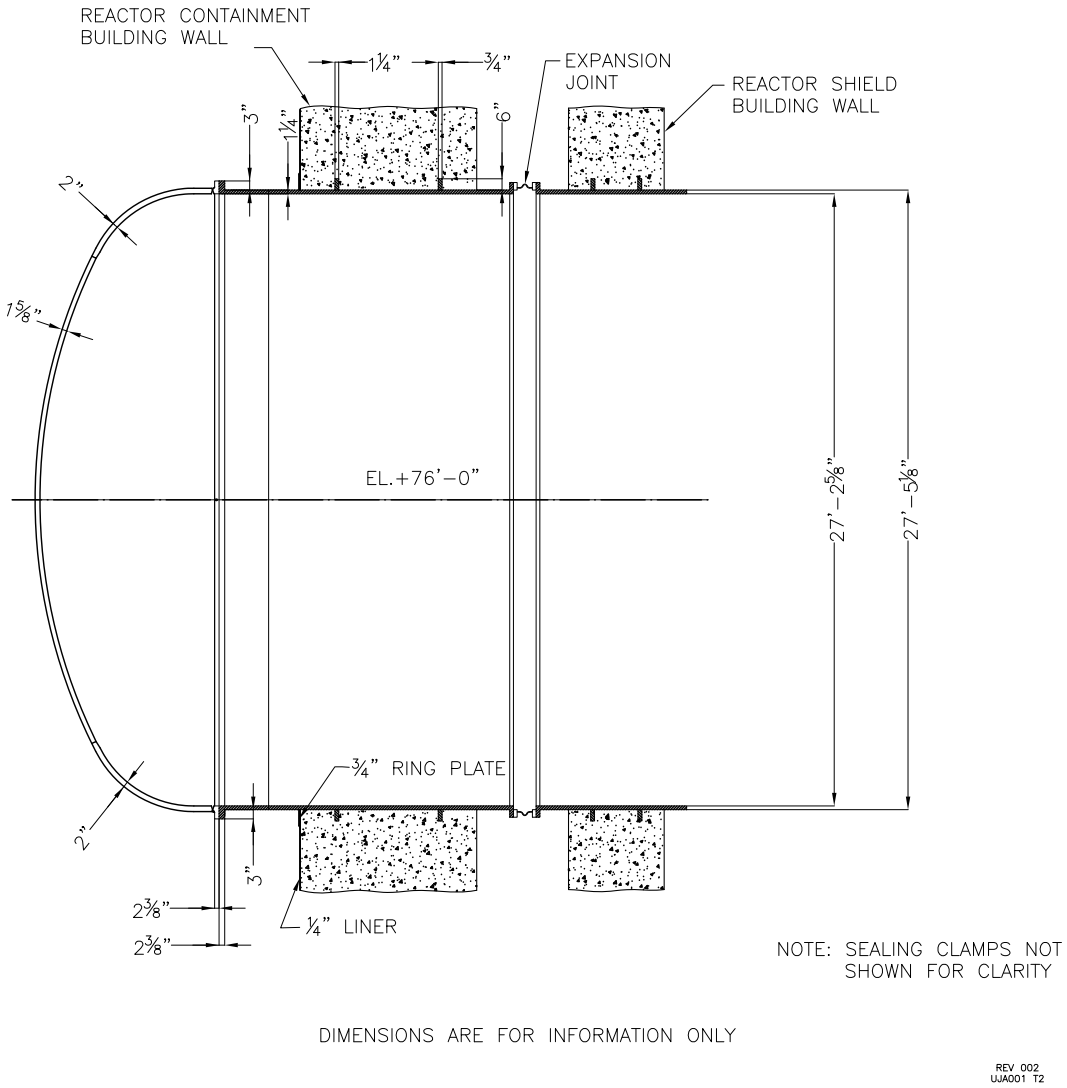

Figure 3.8-26—Personnel Airlock, Emergency Airlock General Overview

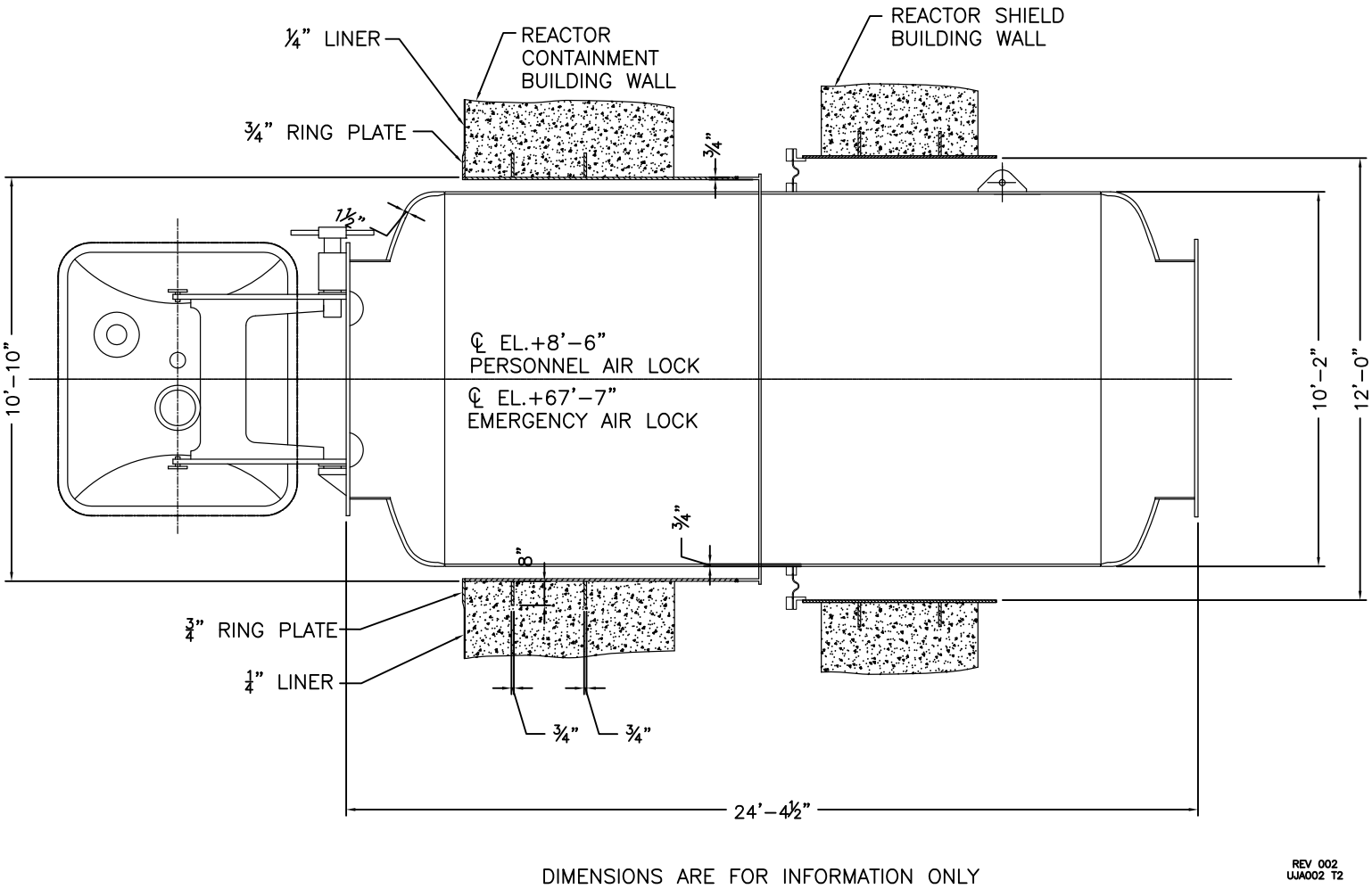

Figure 3.8-27—Containment Penetration for Feedwater Pipe

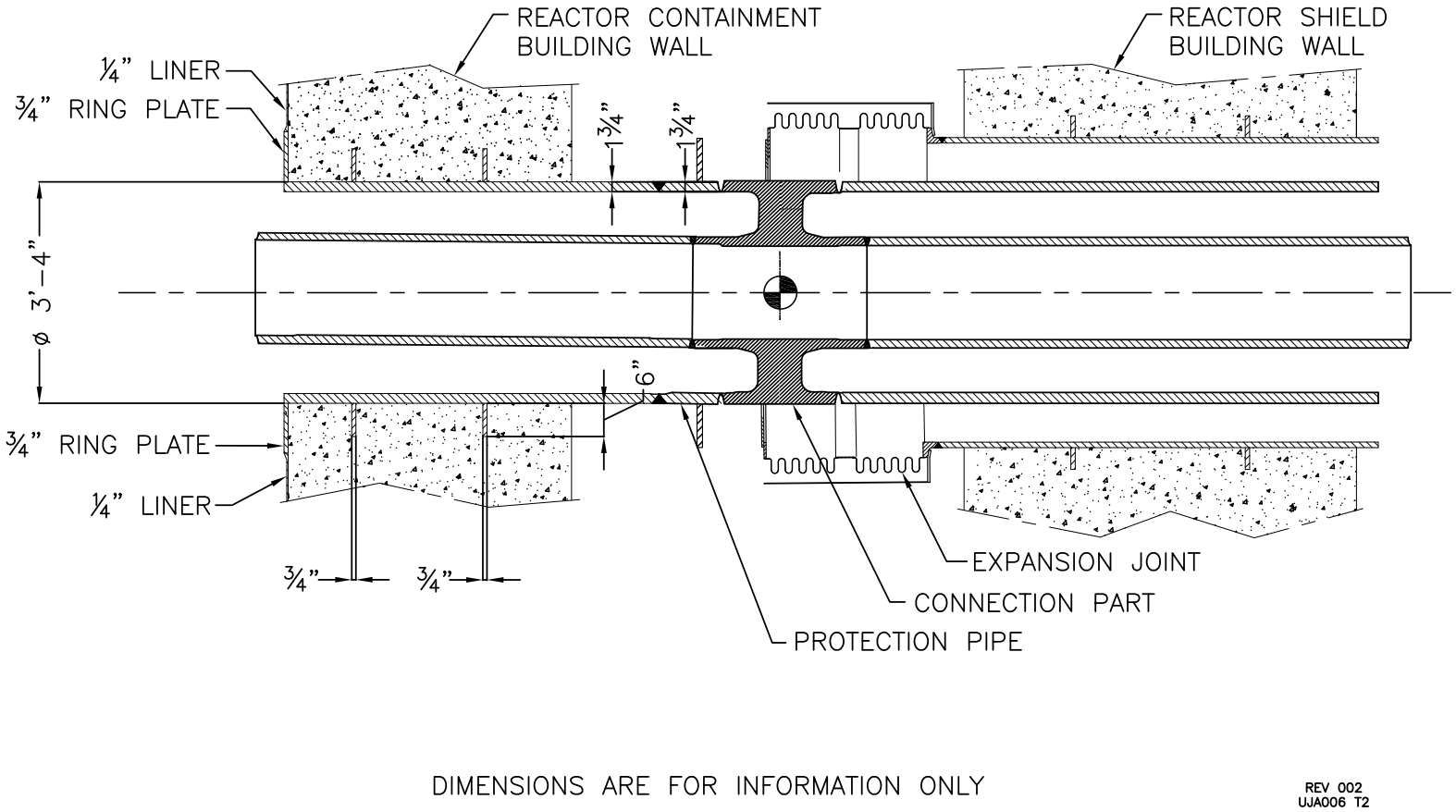

Figure 3.8-28—Containment Penetrations for High Energy Pipes

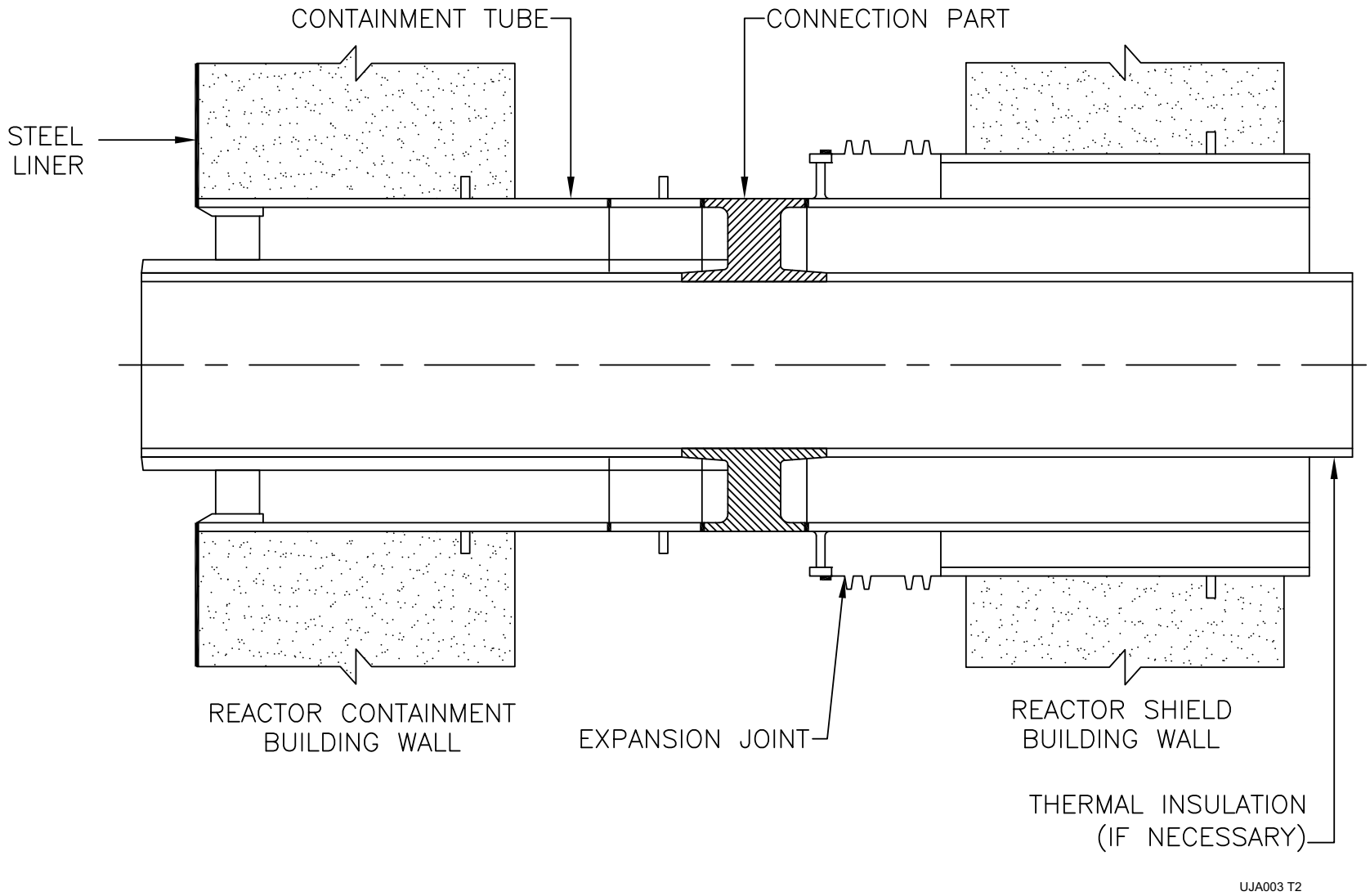

Figure 3.8-29—Containment Standard Piping Penetrations – Single Pipe

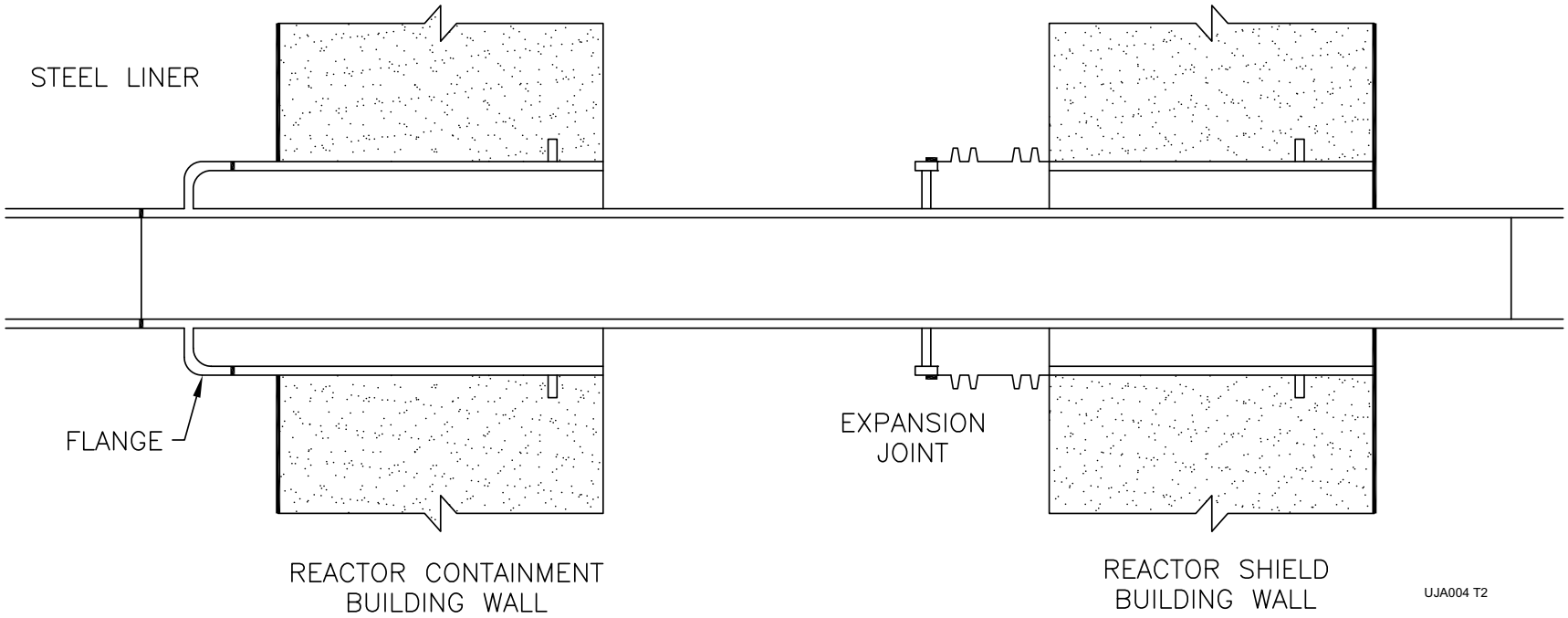

Figure 3.8-30—Containment Standard Piping Penetrations – Multiple Pipes

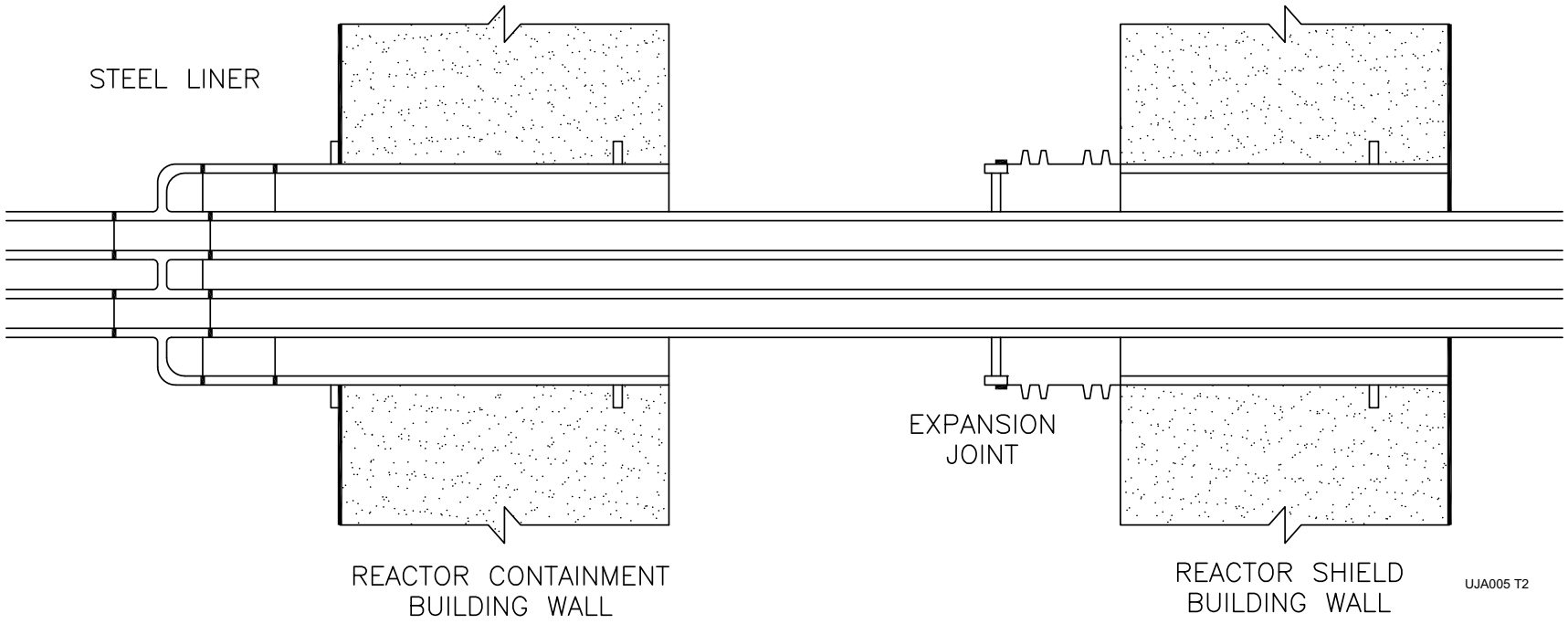

Figure 3.8-31—Fuel Transfer Tube Penetration (Conceptual View)

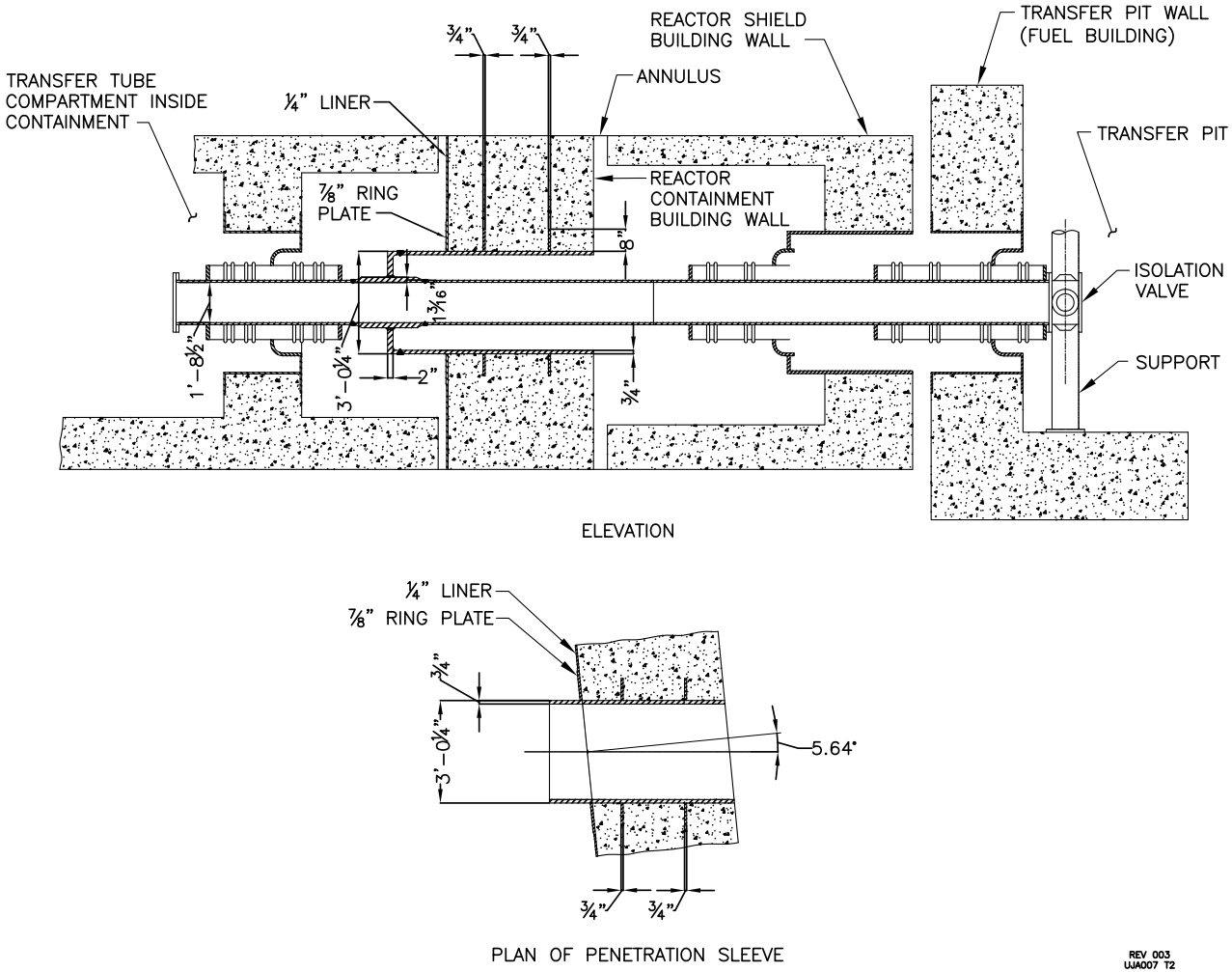

Figure 3.8-32—Reactor Building Internal Structures ANSYS Model

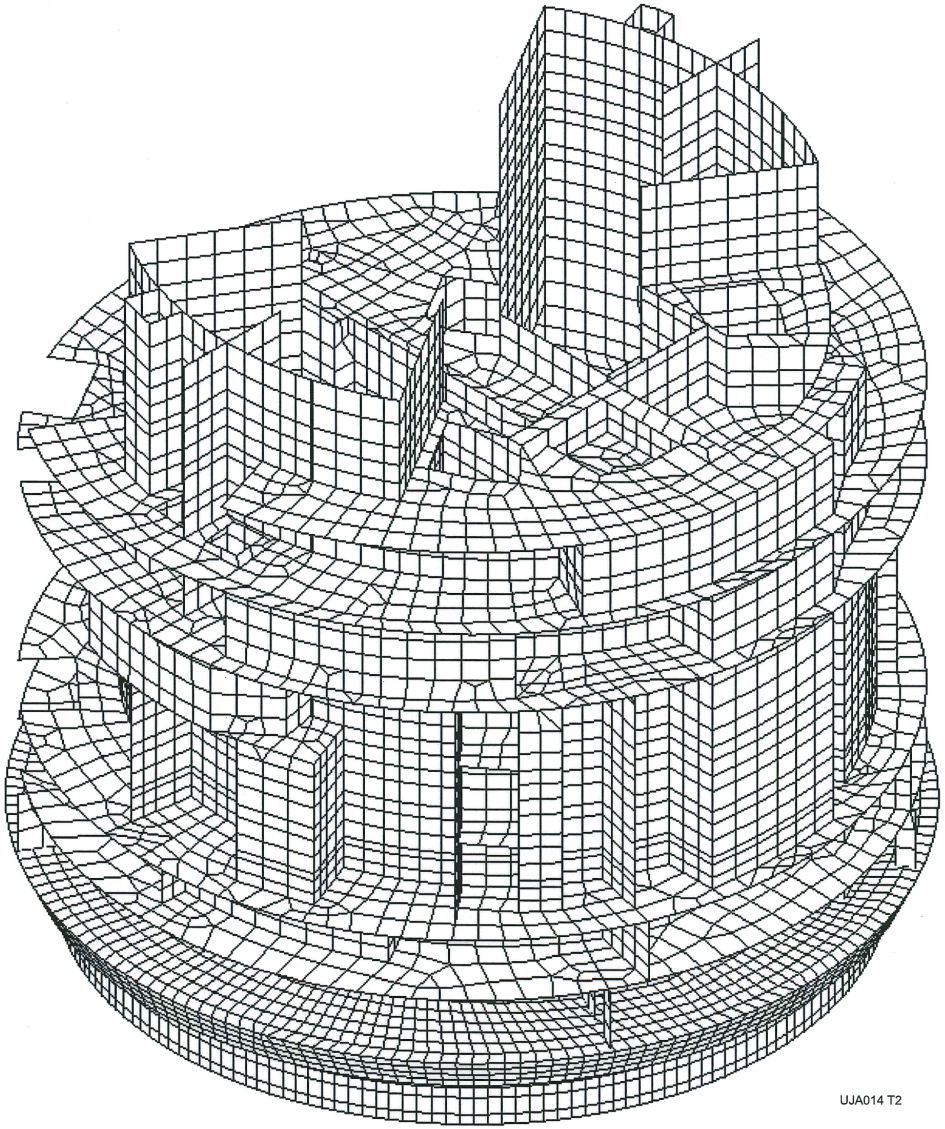

Figure 3.8-33—Reactor Building Internal Structures ANSYS Model – Section through Center of Building Looking West

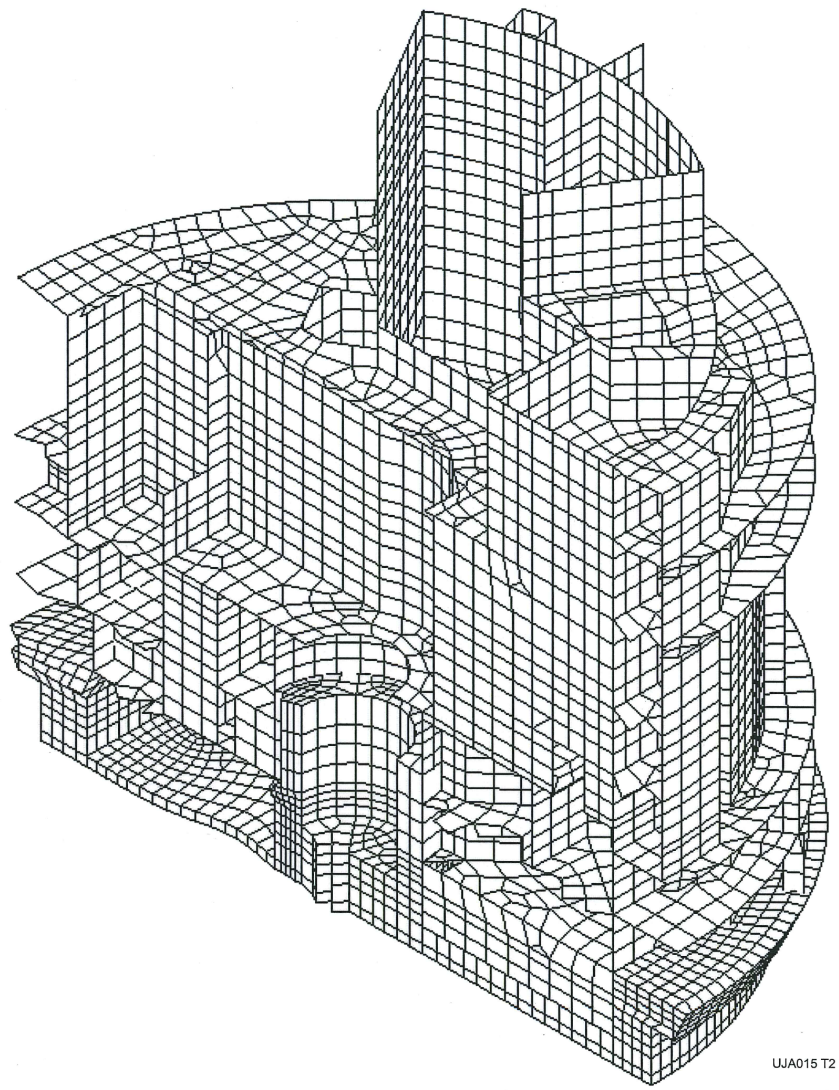

Figure 3.8-34—Reactor Building Internal Structures ANSYS Model – Section through Reactor Cavity and Refueling Canal

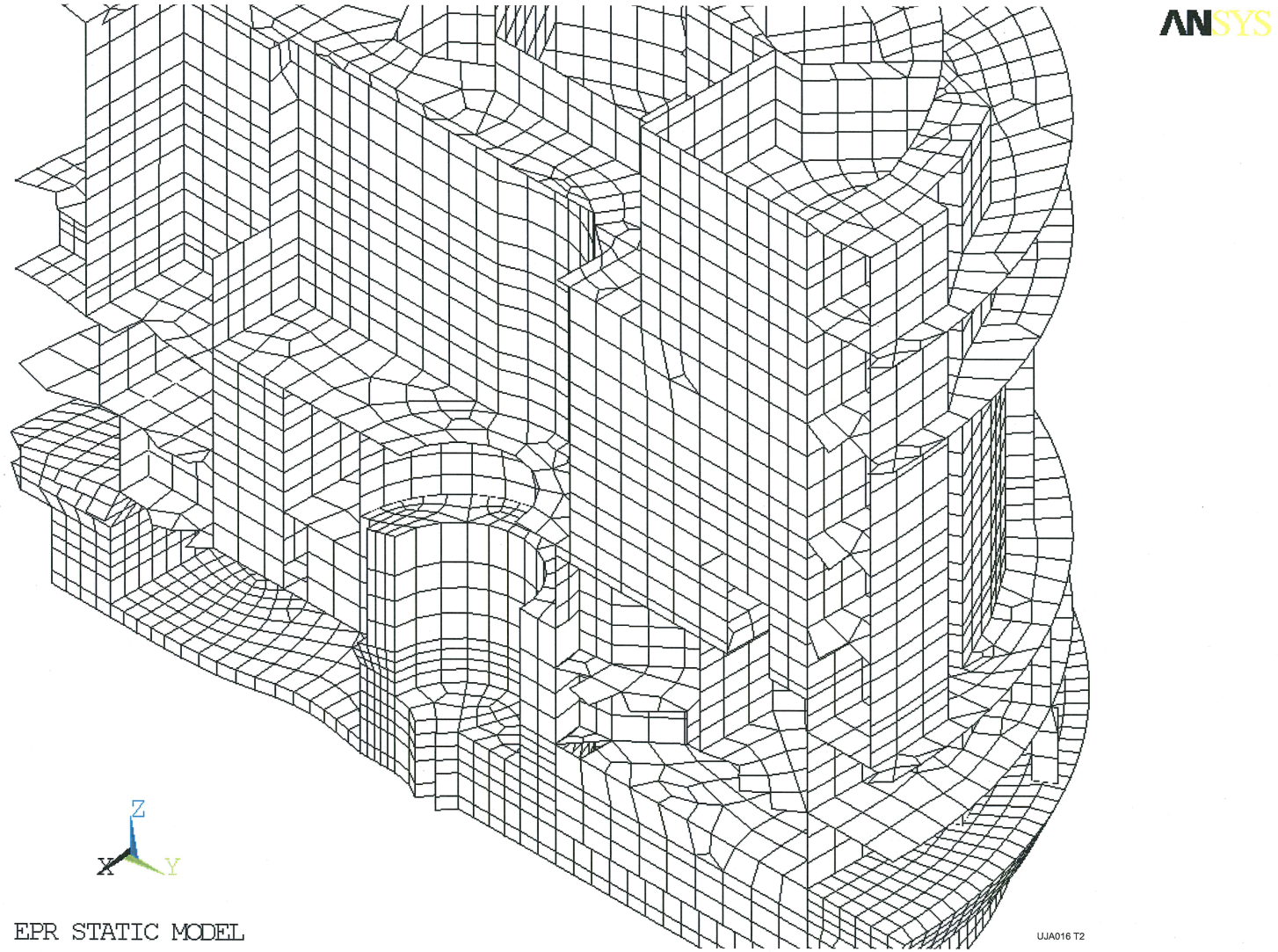

Figure 3.8-35—Reactor Building Internal Structures ANSYS Model – Section through Center of Building Looking North

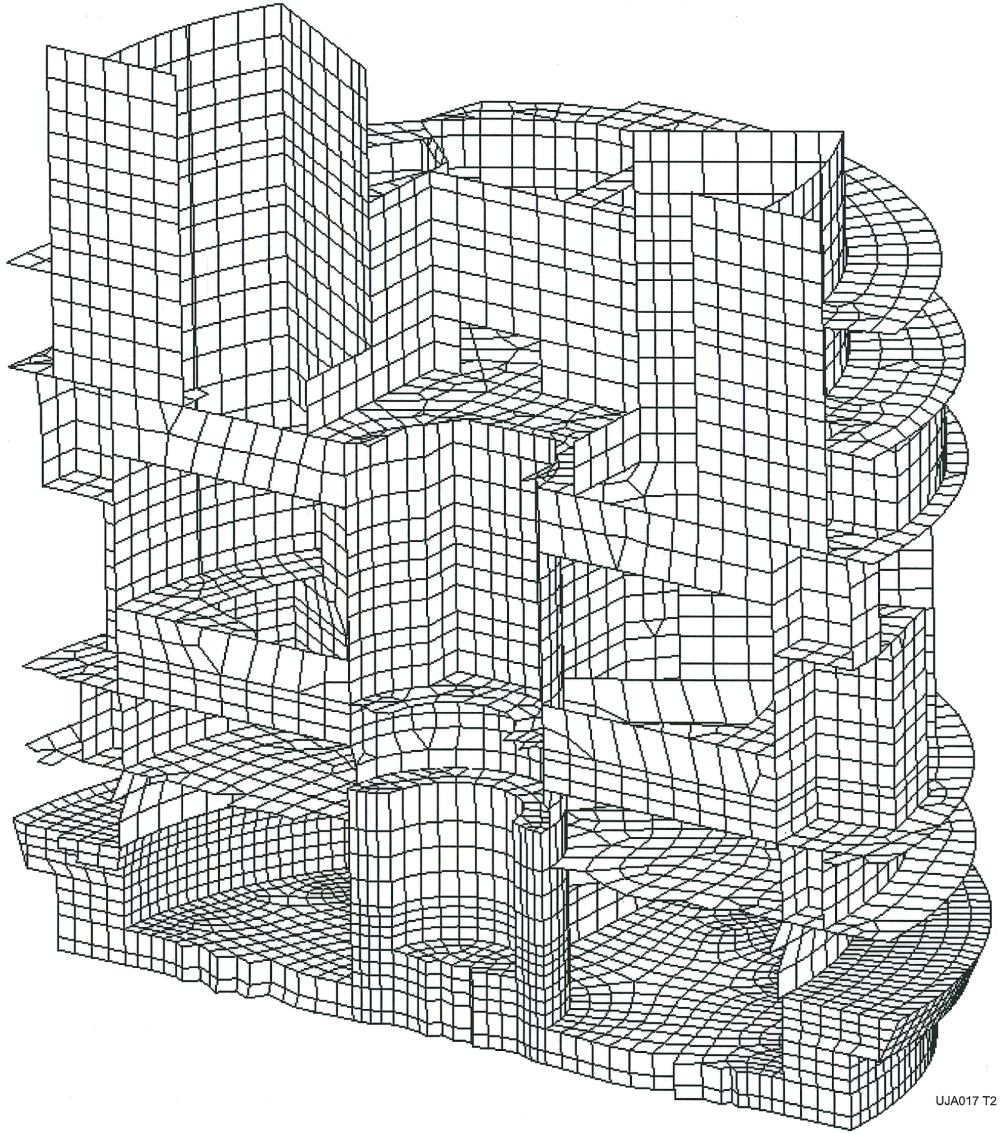

Figure 3.8-36—Reactor Building Internal Structures ANSYS Model – Section through Center of Building Looking Northwest

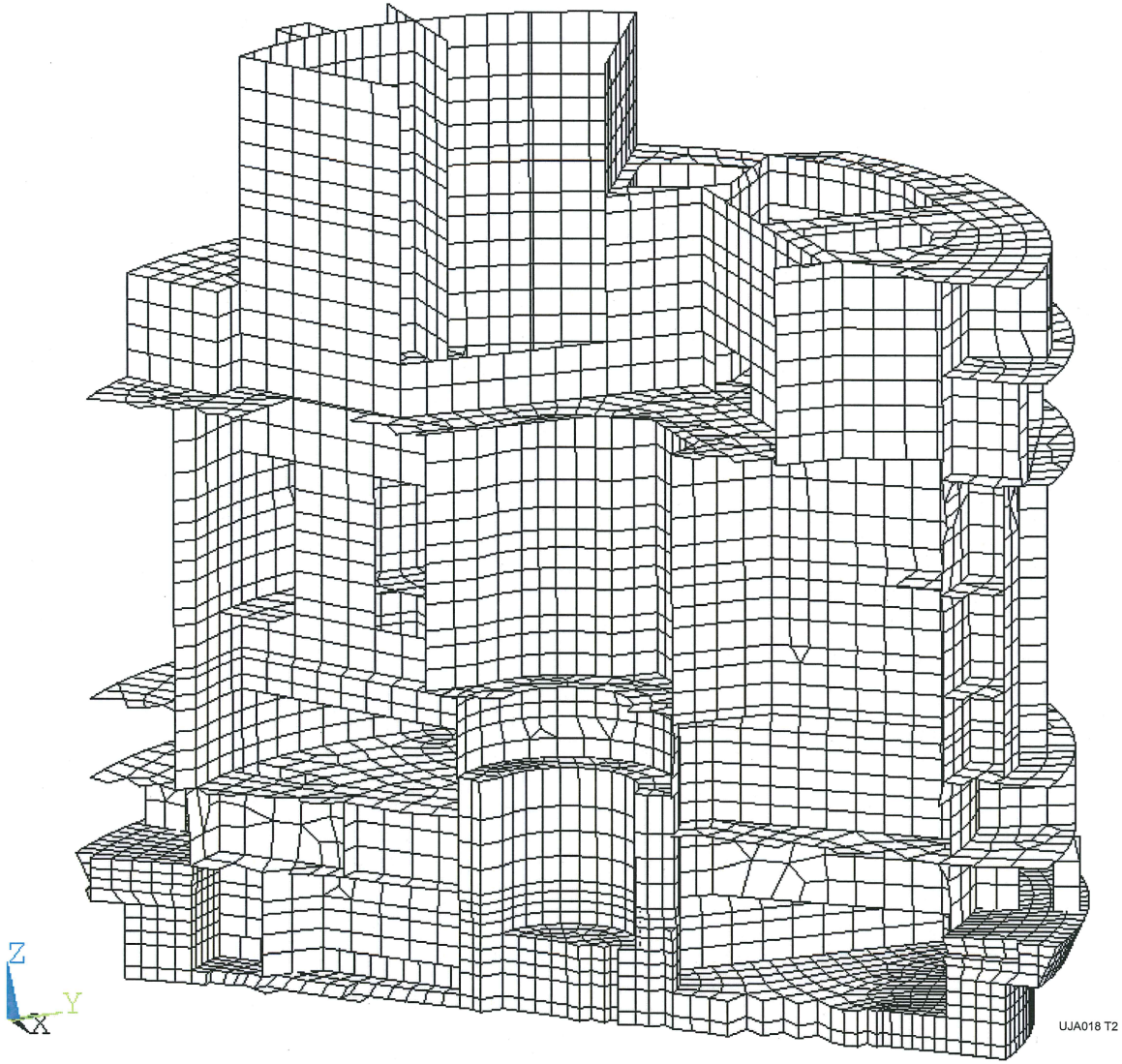

Figure 3.8-37—Reactor Building Internal Structures ANSYS Model – View of IRWST and Internal Structures Basemat

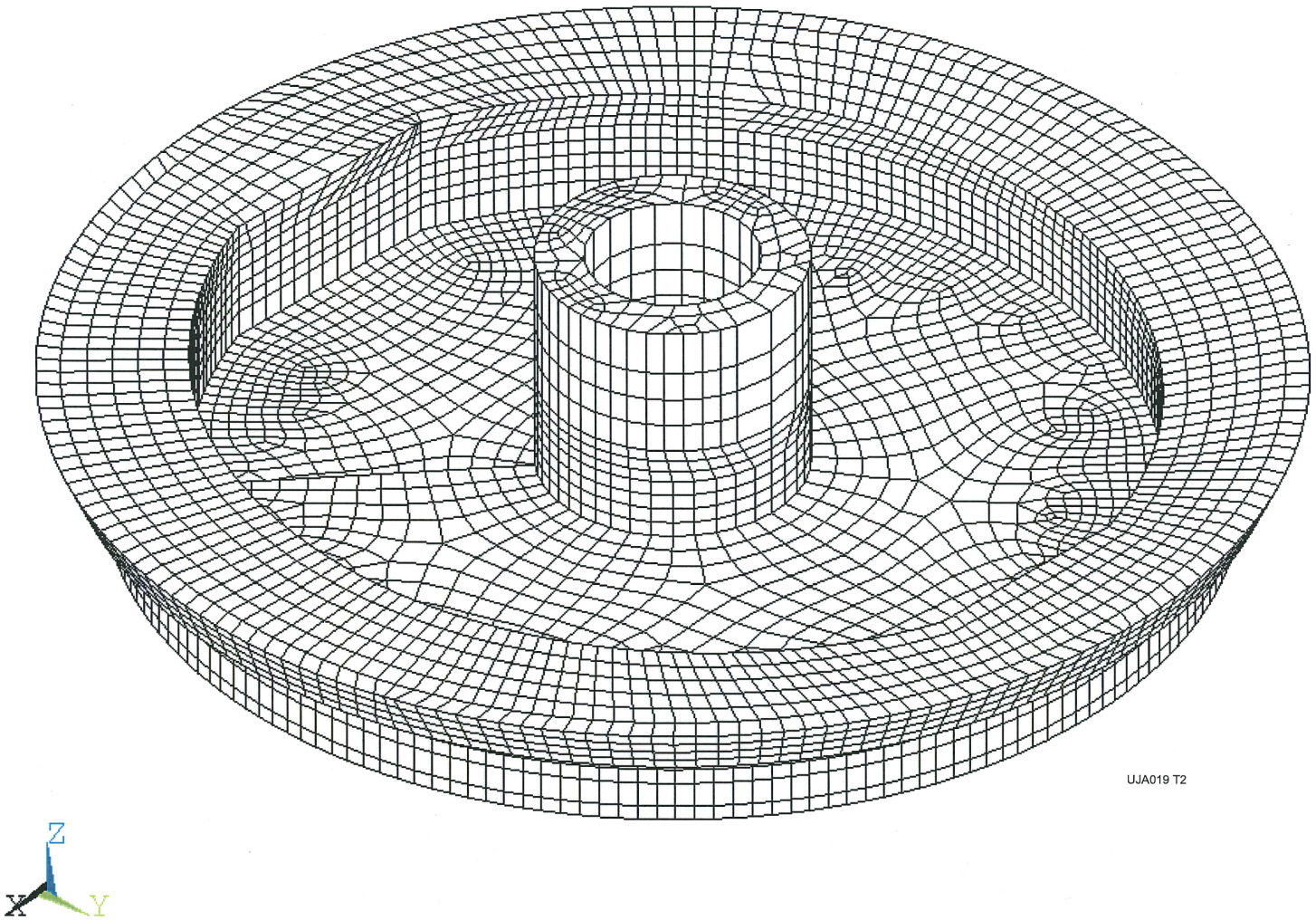

Next File