The Topical Reports for the APR1400 Design

Open Session

1. PLUS7 Fuel Design
2. The Impact of TCD on APR1400
3. KCE-1 CHF Correlation
4. Fluidic Device
5. LBLOCA Methodology

1. PLUS7 Fuel Design
2. The Impact of TCD on APR1400
3. KCE-1 CHF Correlation
4. Fluidic Device
5. LBLOCA Methodology

PLUS7 Fuel Design for the APR1400

Open Session

1. Overview
2. Fuel Design Features
3. Fuel Design Evaluation
4. Experience and Performance
5. Conclusion

1. Overview

- PLUS7 Developed for the APR1400 & OPR1000 PWRs
  - ✓ Joint program with Westinghouse Electric Co. (WEC)
  - ✓ April 1999 ~ March 2002
  - ✓ Designed/tested at WEC-Columbia, SC
- Design Goal
  - ✓ Improvement of fuel performance w.r.t. CE-Guardian
  - ✓ Batch average discharge burnup > 55 MWd/kgU
  - ✓ Overpower margin > 10% increase
  - ✓ Seismic resistance > 0.3g ground acceleration
  - ✓ No foreign material-induced and fretting wear-induced rod failure

2. Fuel Design Features

(1/2)

Reconstitutable top nozzle

- Guide post, holddown spring, holddown plate and adapter plate remains one piece

Fuel rod

- Advanced cladding tube
  → ZIRLO tube
- Optimized rod OD
  → STD rod OD
- Axial blanket
  → Improving neutron economy

Inconel top/bottom grid

Mixing vaned mid grid

- Mixing vanes
  → Enhancing thermal margin
- Straight grid straps
  → Improving Seismic Resistance
- Conformal spring/dimple
  → Reducing GTRF

Protective grid for debris filtering

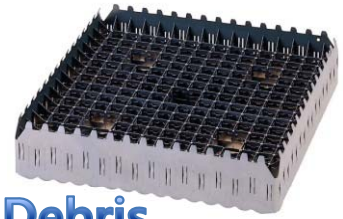

Debris filtering bottom nozzle

- Increasing debris filtering efficiency
- Small hole/slot bottom nozzle

2. Fuel Design Features

(2/2)

PLUS7 incorporated the proven Guardian structure
and the proven Westinghouse type fuel features to improve fuel performance

Item		Guardian	RFA	PLUS7
Cladding		Zry-4	ZIRLO	ZIRLO
Rod diameter		0.382"	0.374"	0.374"
Axial blanket		X	O	O
Mid grid	Spring	Cantilever	Diagonal	Conformal
	Dimple	Arched	Horizontal	Conformal
	Strap	Wavy	Straight	Straight
	Mixing vane	X	O	O
Top nozzle		Separated	Assembled	Assembled
Bottom nozzle		Large hole	Small hole	Small hole & slot

3. Fuel Design Evaluation

- Fuel Assembly Design Evaluation
  - ✓ Fuel assembly design evaluation was performed for design criteria
  - ✓ The evaluation results for the Seismic/LOCA events are described in a separate technical report.
  - ✓ Evaluation and test results showed that the PLUS7 fuel assembly met all of mechanical design criteria
- Fuel Rod Design Evaluation
  - ✓ Fuel rod design evaluation was performed for design criteria including cladding stress, cladding strain, cladding fatigue damage, cladding oxidation and hydriding, rod internal pressure, cladding collapse, overheating of fuel pellet (melting) and pellet-to-cladding interaction
  - ✓ All of the fuel rod design criteria were met up to the maximum fuel rod average burnup of 60,000 MWD/MTU

4. Experience and Performance

(1/3)

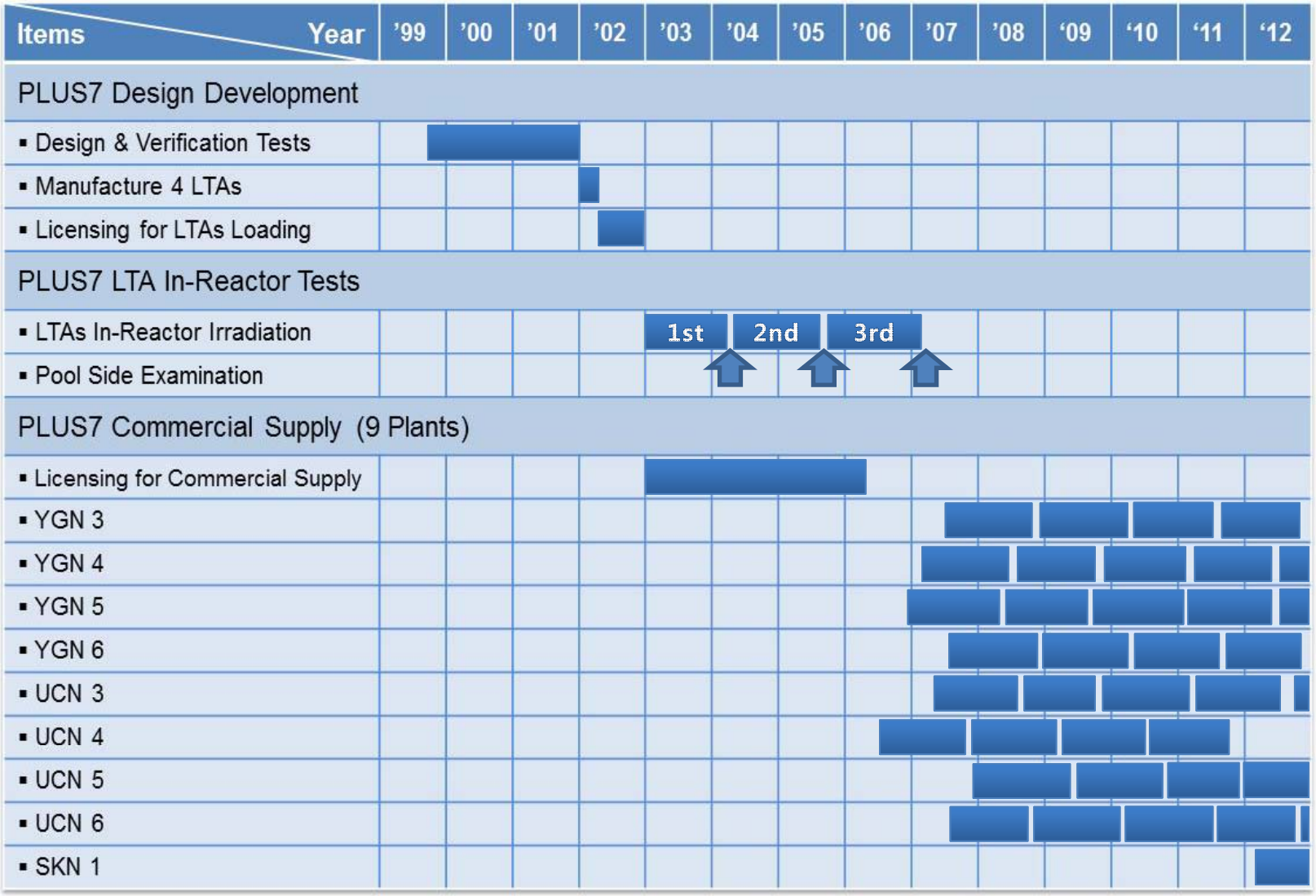

More than 2,300 PLUS7 loaded as of 2012

4. Experience and Performance

(2/3)

PSE Results for LTAs and CSAs

- PSE was performed for 4 LTAs and 4 CSAs to confirm the in-reactor fuel performance after 1st, 2nd and 3rd cycle

Item	Results
FA growth	- Enough axial gap to internals
Grid width	- Enough grid to grid gap
Shoulder gap	- Enough shoulder gap
FR channel closure	- Enough rod to rod gap
Clad oxide thickness	- Less than design limit
Fuel rod diameter	- Less than design limit

4. Experience and Performance

(3/3)

PIE Results for LTA

- Hot cell examinations on selected 6 fuel rods were performed after completing the 3rd cycle operation of PLUS7 LTA

Item	Results
Fretting wear	- No measurable wear
Clad oxide thickness	- Less than design limit
Fuel rod diameter	- Less than design limit
Clad hydrogen contents	- Less than design limit
Fission gas release	- Less than design limit

5. Conclusion

- Evaluation and test results showed that the PLUS7 fuel assembly met all of mechanical design criteria
- All of the fuel rod design criteria were met up to the maximum fuel rod average burnup of 60,000 MWD/MTU
- In-reactor performance was verified through PSE and PIE
- Operating experience and future plan
  - ✓ More than 2,300 PLUS7 FAs have been loaded as of 2012 with satisfactory fuel performance
  - ✓ PLUS7 Fuel is operating at all of the 9 OPR1000 NPPs in Korea
  - ✓ Additional implementation plan of PLUS7 Fuel
    - ➢ 3 operating OPR1000 NPPs in Korea for reload core
    - ➢ 6 constructing APR1400 NPPs for initial core including 2 Barakah NPPs
    - ➢ 6 planning APR1400 NPPs for initial core including 2 Barakah NPPs

1. PLUS7 Fuel Design
2. **The Impact of TCD on APR1400**
3. KCE-1 CHF Correlation
4. Fluidic Device
5. LBLOCA Methodology

Fuel Thermal Conductivity Degradation (1/2)

- NRC issued Information Notice (IN) 2009-23 on Oct. 8, 2009 on NUCLEAR FUEL THERMAL CONDUCTIVITY DEGRADATION.
- IN 2009-23 notified the irradiation assisted fuel pellet thermal conductivity degradation and possible impact on fuel design, fuel related primary loop and containment accident and transient analysis.
- KHNP will submit a separate technical report demonstrating that APR1400 design and safety analyses have a sufficient margin to safety criteria.

Fuel Thermal Conductivity Degradation (2/2)

- TCD Technical Report will include the evaluation of TCD impact on the following analyses.
  - Large Break LOCA
  - Small Break LOCA
  - Long-term Cooling
  - Non-LOCA Events
  - Containment Analysis
    - Mass and Energy Release
    - Containment Peak Pressure and Temperature
    - EQ
  - PSA

1. PLUS7 Fuel Design
2. The Impact of TCD on APR1400
3. **KCE-1 CHF Correlation**
4. Fluidic Device
5. LBLOCA Methodology

KCE-1 Critical Heat Flux Correlation

for PLUS7 Thermal Design (APR1400-F-C-TR-12002)

Introduction

- **PLUS7 Developed for APR1400 & OPR1000***
  - April 1999 ~ March 2002
- **CHF Test for PLUS7 (~ July 2001)**
  - To check the improvement of thermal performance (w.r.t. Guardian)
  - To get the data for CHF correlation development (KCE-1)
  - HTRF (Columbia Univ., Closed permanently @ 2003)
- **KCE-1 CHF Correlation**
  - Developed based on Same Functional Formula with CE-1
  - Approval to Design Application by Korean Regulatory Commission (KINS) on October 2004
  - Applied to the first reload core(PLUS7) in UCN 4 (OPR1000), June 2006
  - Applied to APR1400 PSAR/FSAR

* OPR1000 : Optimized PWR with 1000MWe

Test Facility and Test Section

- **Schematics of HTRF**

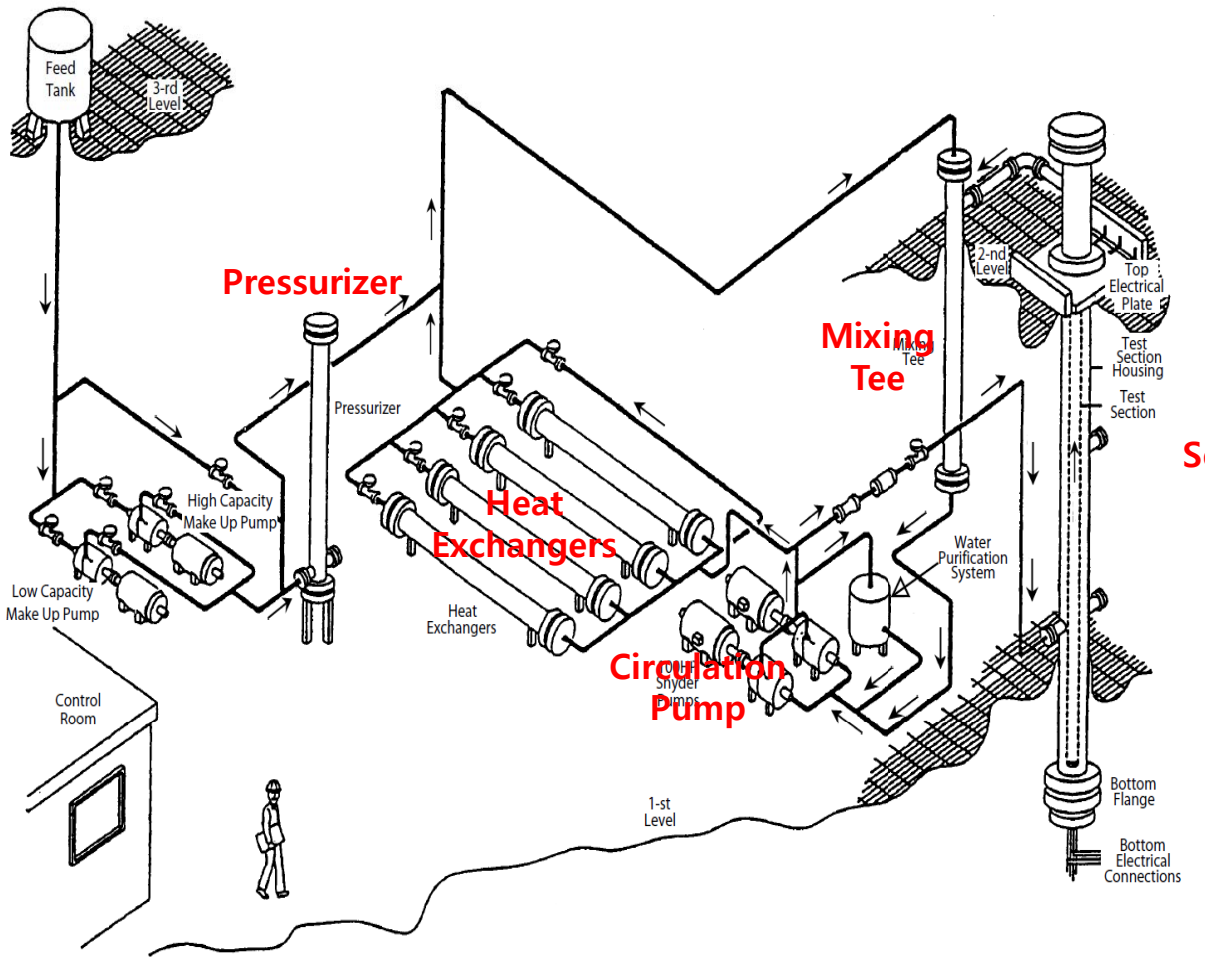

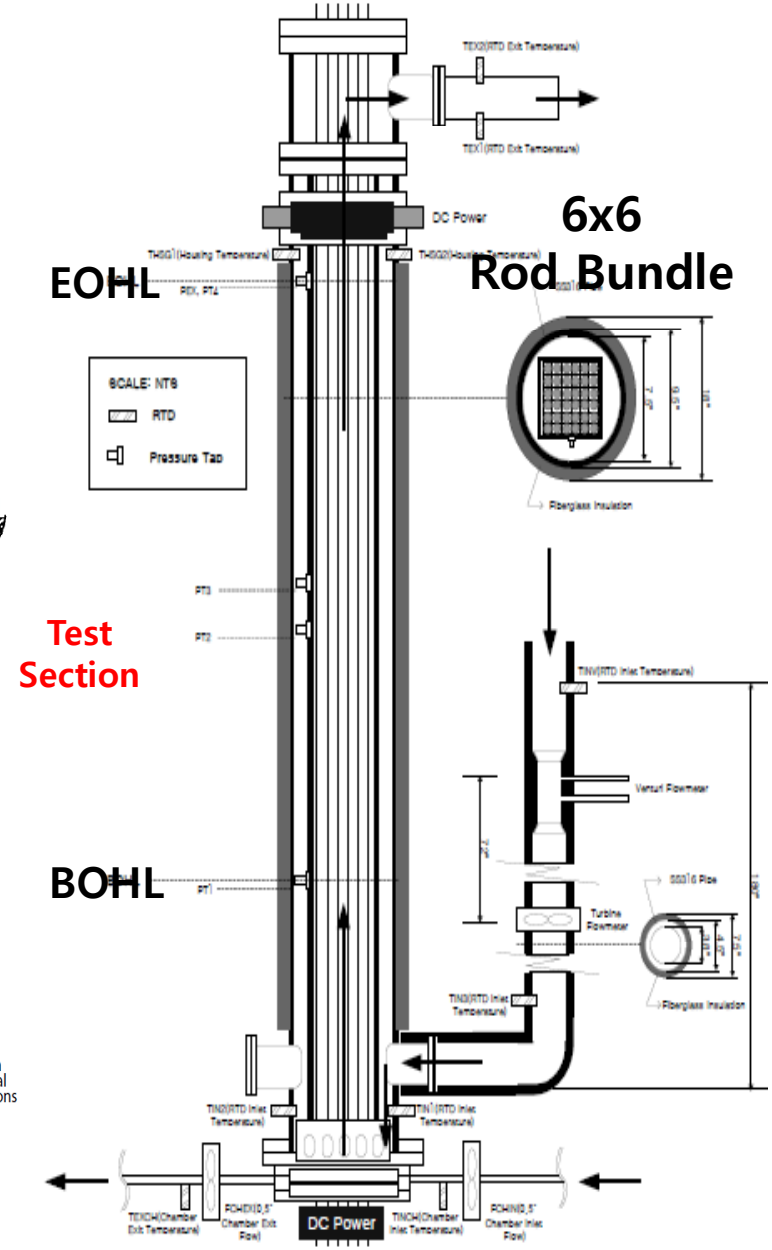

APR1400-F-X-EC-13007-NP

Test Procedure and CHF Measurements

- **Procedure**

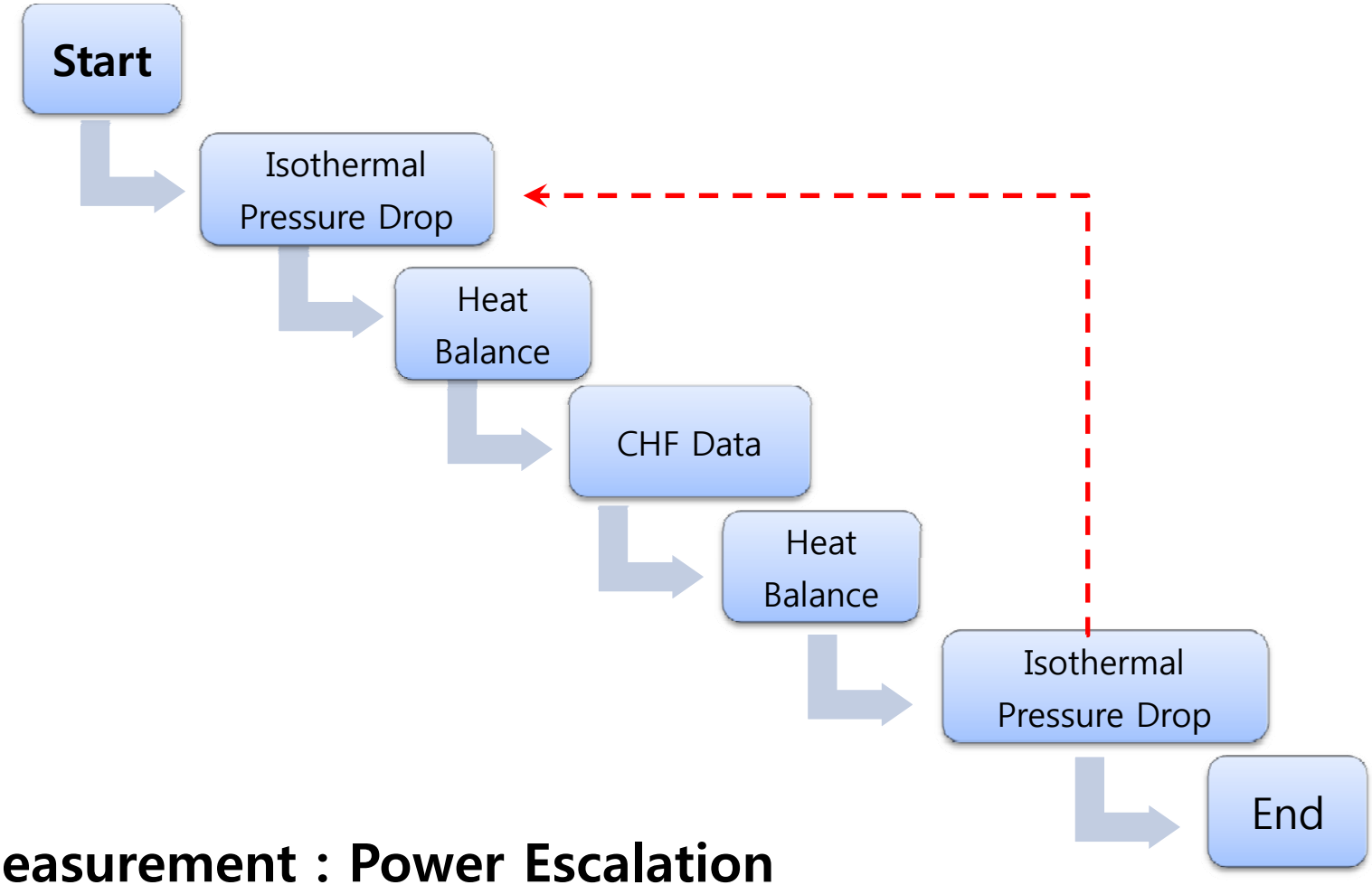

- **CHF Measurement : Power Escalation**

CHF Correlation Development (1/3)

- **Design Method/Assumption**
  - Subchannel Code : TORC (CENPD-161-P-A, 1986)
  - Design Constitutive Relations
- **Functional Formula**
  - CE-1 CHF Correlation (CENPD-162-P-A, 1976)
- **Specific Considerations**
  - Resulting in Conservatism

CHF Correlation Development (2/3)

- **Correlation Detail**

  – **DNBR = $q''_{CHF,\ KCE\text{-}1}$ / $q''_{Measured}$**

$$q''_{CHF,KCE-1} = \frac{B_1 (DH/DHM)^{B_2} \left[(B_3 + B_4 P) \cdot (G/10^6)^{(B_5 + B_6 P)} - (G/10^6)\chi\ h_{fg} \right]}{(G/10^6)^{(B_7 P + B_8 (G/10^6))}}$$

Parameter Range	CHF Data	CHF Correlation	
		CE-1	KCE-1
Pressure, psia	1395 ~ 2495	1785 ~ 2415	1395 ~ 2415
Inlet Mass Velocity, Mlbm/hr-ft^2 (Local Mass Velocity)	0.9 ~ 3.7	0.87 ~ 3.21	0.85 ~ 3.15
Inlet Temperature, °F (Local Quality, fraction)	250 ~ 640	-0.16 ~ 0.20	-0.15 ~ 0.28

CHF Correlation Development (3/3)

- **Measured CHF vs. Predicted CHF Trends**

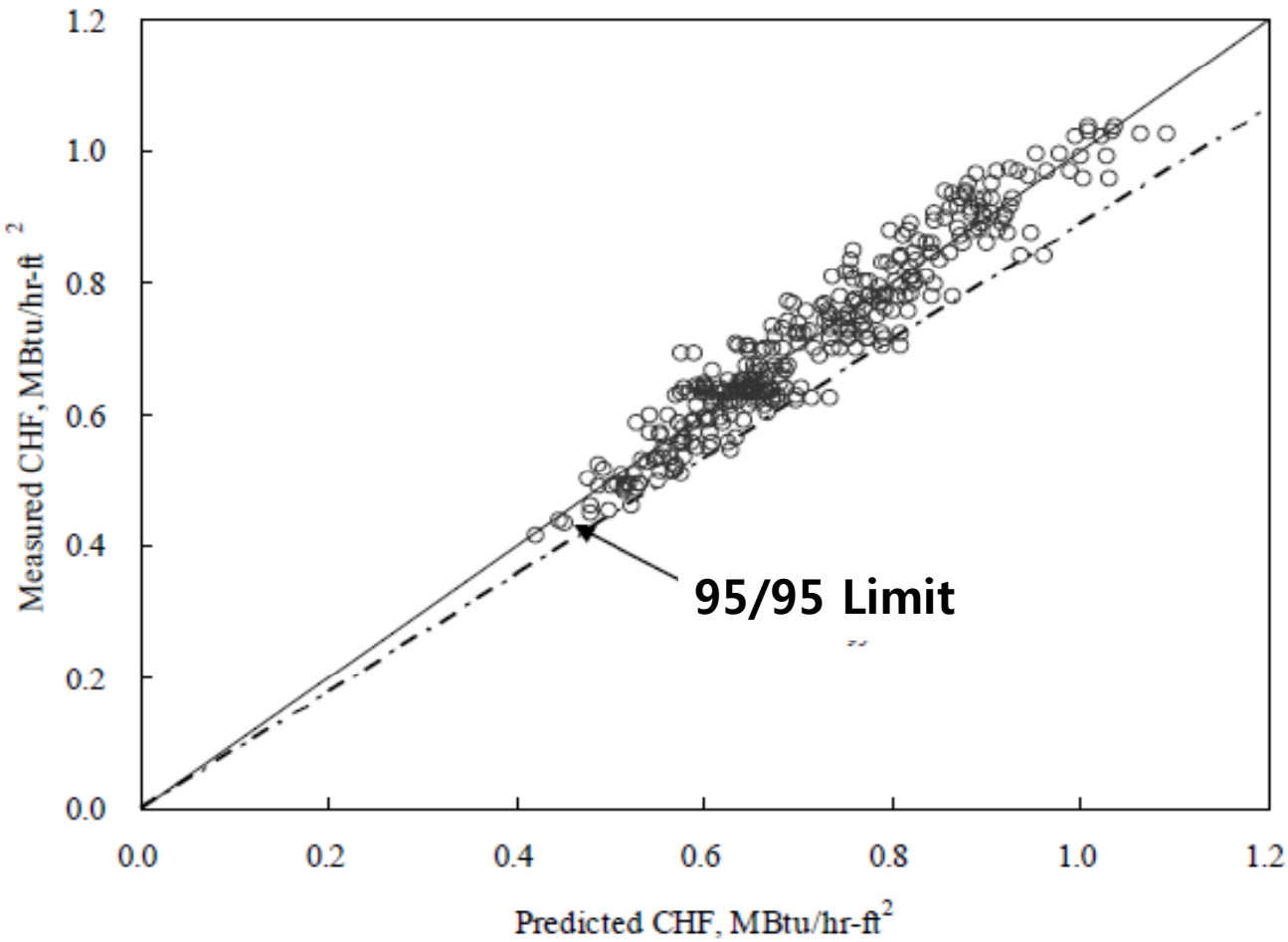

Correlation DNBR Limit

- **Statistical Analysis**
  - Distribution Characteristics
    - D'-test/ W-test (ANSI N15.15-1974)
    - Parametric or Non-Parametric
  - Poolability
    - Parametric : F (Bartlett) test / T test
    - Non-Parametric : Wilcoxon-Mann-Whitney test
  - Outlier
- **95x95 Limit**
  - Parametric : Inverse of M/P Lower Bound with Owen's 1-side Tolerance Factor (SCR-607, 1963)
  - Non-Parametric : Inverse of M/P at m-th rank (Experimental Statistics, Handbook 91, National Bureau of Standards, 1966)

Correlation Application

- **DNB Acceptance Criteria**
  - SRP Sections 4.2 & 4.4
  - 95/95 DNBR Limit : 1.124
- **Design Computer Codes**
  - TORC : Full Compliance with the Approved Conditions, CENPD-161-P-A & CENPD-206-P-A
  - CETOP : Full Compliance with the Approved Conditions, CEN-139(A)-P & CEN-214(A)-NP
  - Implementation KCE-1 CHF Correlation to Computer Code : Modifying only the Coefficients of CE-1 CHF Correlation
- **Design Application**
  - **DNBR = $[q''_{CHF,\ KCE\text{-}1U}/F_{Tong}]\ /\ q''_{actual}$**
  - DNBR(CETOP) ≤ DNBR(TORC) for all Reactor Conditions

Conclusion

- **CHF Test**
  - HTRF
  - 6x6 Rod Bundle (Best Representative of PLUS7)
- **KCE-1 CHF Correlation**
  - Same Functional Formula with CE-1 Correlation
  - Design Subchannel Code/Constitutive Relations
  - 95x95 Limit : 1.124
  - Specific Considerations resulting in Conservatism
- **Applied to APR1400 & OPR1000 Design Analysis for PLUS7**

1. PLUS7 Fuel Design
2. The Impact of TCD on APR1400
3. KCE-1 CHF Correlation
4. **Fluidic Device**
5. LBLOCA Methodology

APR1400 Safety Injection Tank - Fluidic Device

Meeting Objective

Introduction

Fluidic Device

- Working Principles of Fluidic Device
- Performance Requirements of Fluidic Device
- Performance Verification Tests

Summary

Meeting Objective

Provide a review of the APR1400 Fluidic Device Topical Report, accepted in June 27, 2013

- **Purposes of Topical Report are**
  - **to support the review of Topical Report entitled, "CAREM for LBLOCA Analysis of APR1400" (Fluidic Device is one of key elements of APR1400 Safety Injection System)**
  - **to provide the design details and confirmatory test results of Fluidic Device**

Introduction (1/2)

Safety Injection System

- Major Advanced Design Features of the Safety Injection System for APR1400 :
  - 4-Train Safety Injection System (SIS)
  - Direct Vessel Injection
  - In-containment Refueling Water Storage Tank (IRWST)
  - *Safety Injection Tank with Fluidic Device (SIT-FD)*
- SIS design philosophy of the APR1400 is similar to that of previously licensed PWR(System80+) by the NRC *except for the Fluidic Device in Safety Injection Tank*

Introduction (2/2)

Safety Injection System

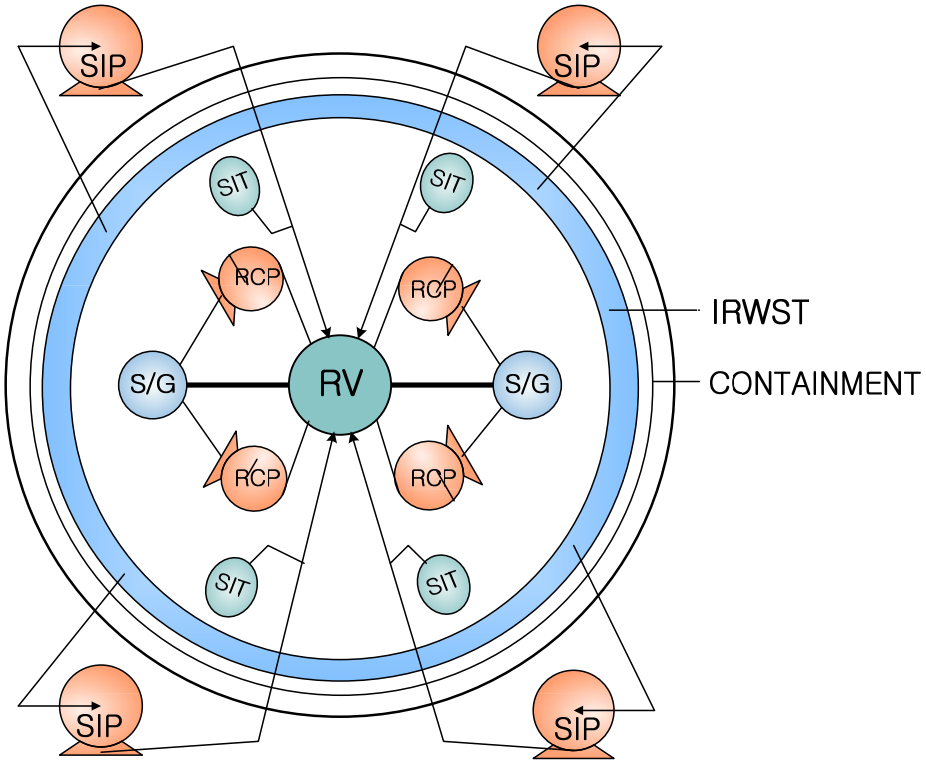

Safety Injection System configuration

Fluidic Device (1/7)

Working Principles of Fluidic Device

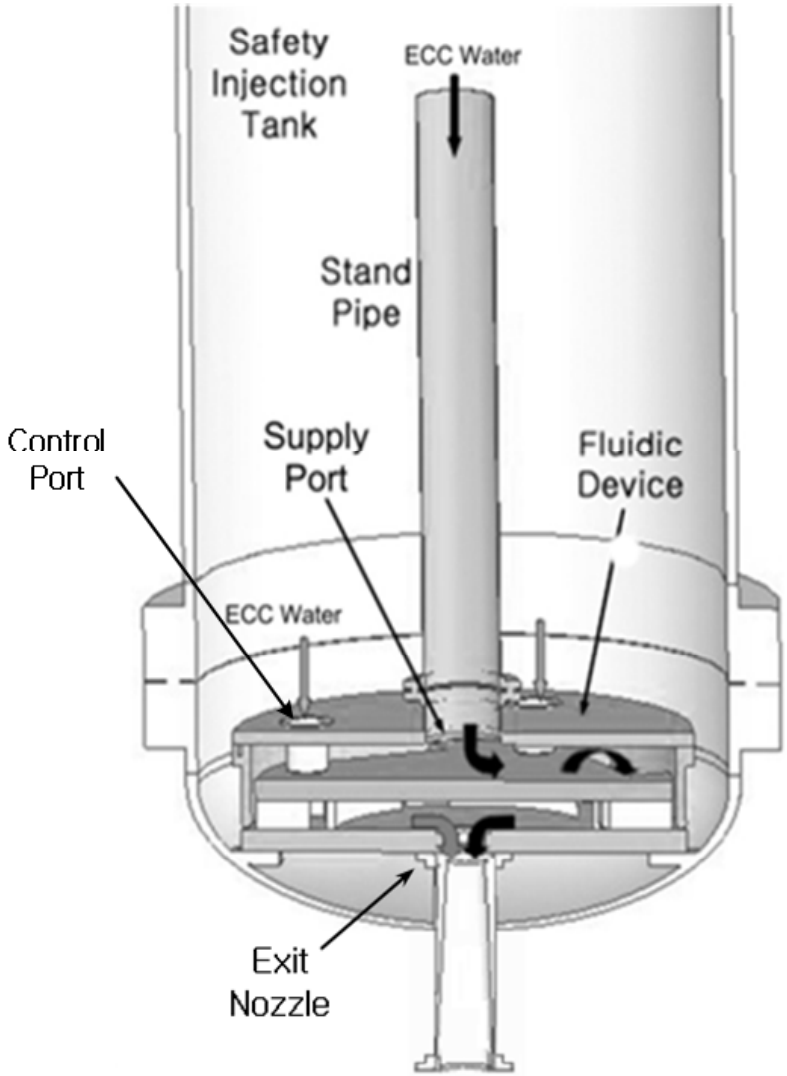

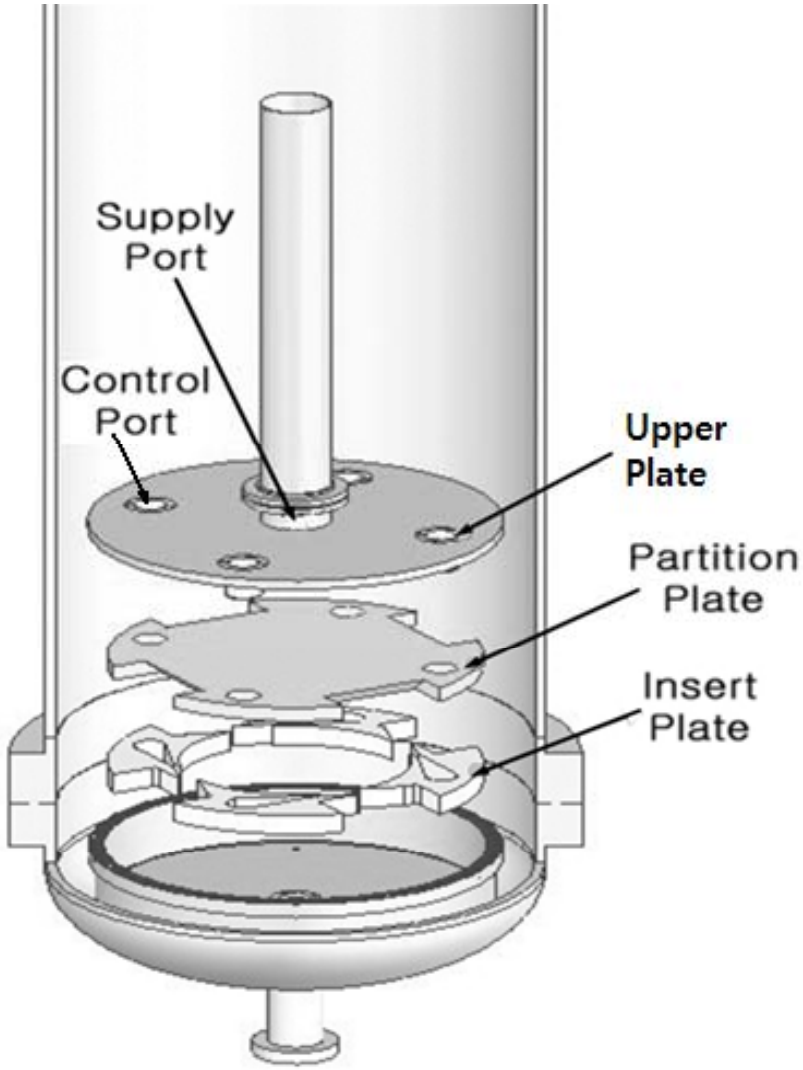

Fluidic Device (2/7)

Working Principles of Fluidic Device

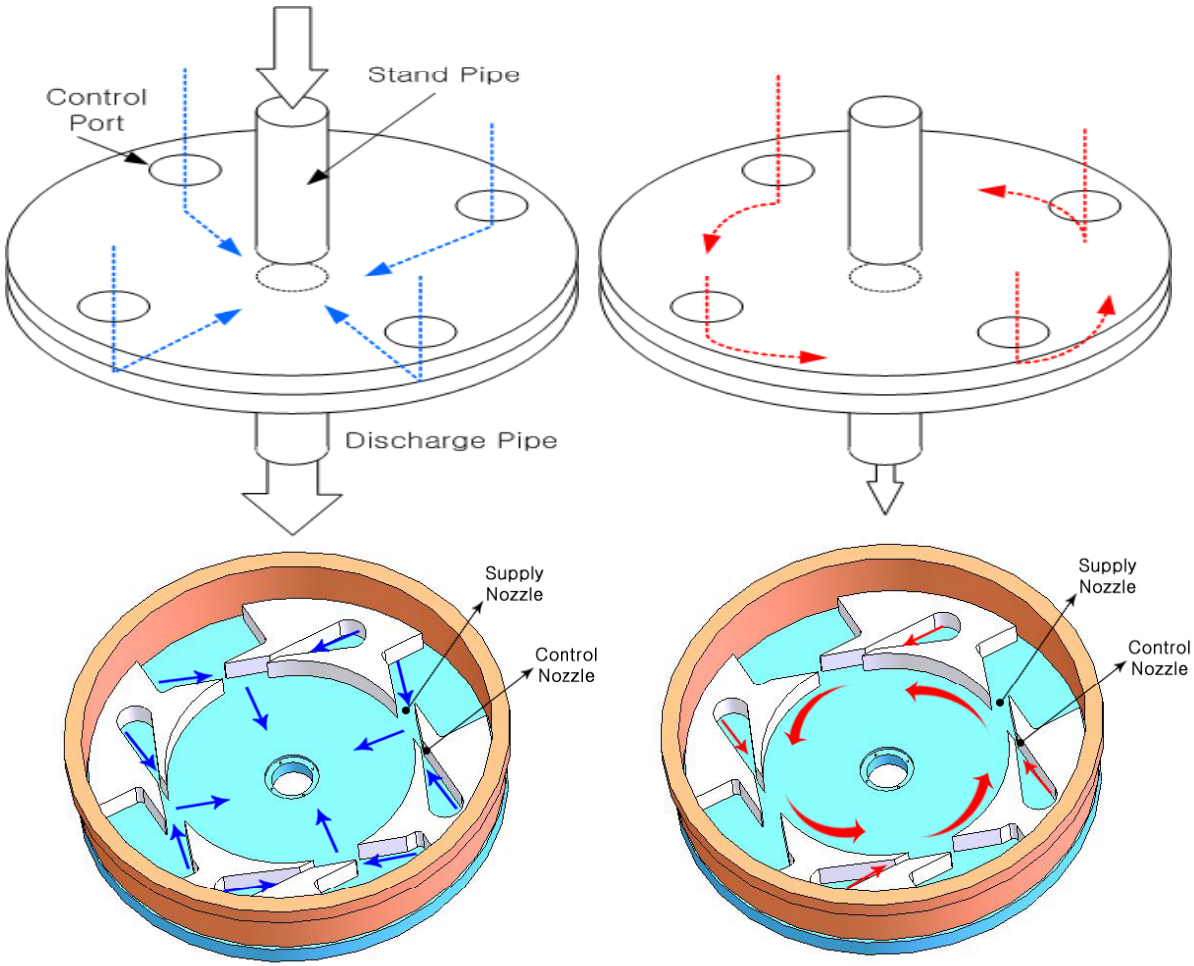

Large Flow Rate Small Flow Rate

Typical Flow Pattern inside the Vortex Chamber

Fluidic Device (3/7)

Performance Requirements of Fluidic Device

- **Performance Requirements for Large Flow Injection**
  - Large flow injection should continue until the end of refill time
    - ✓ Lower plenum and downcomer should be filled with water as rapidly as possible for early start of reflood

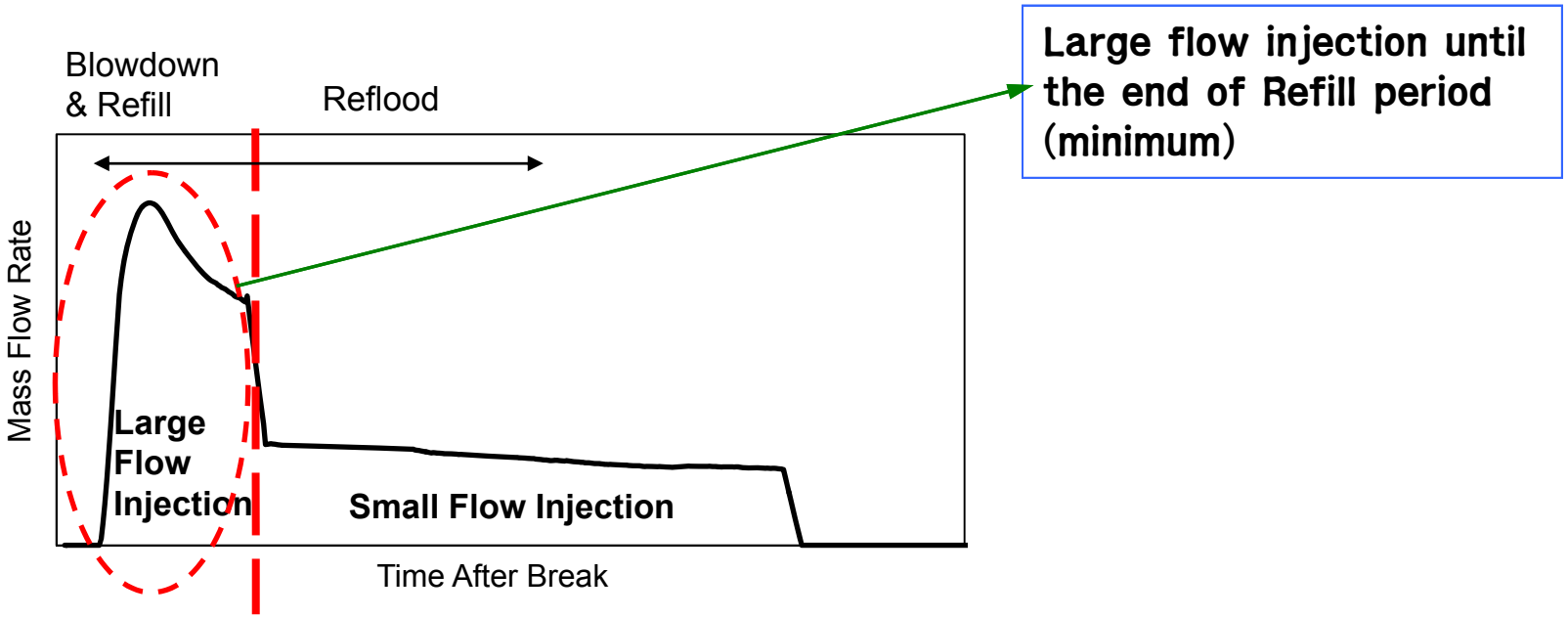

Fluidic Device (4/7)

Performance Requirements of Fluidic Device

- **Design Requirements for Large Flow Injection**
  - Water volume above the top of stand pipe
  - Resistance coefficient of large flow path
    - ✓ Requirements with margin are determined based on the hypothetical LBLOCA analysis
    - ✓ The other parameters such as initial gas pressure, gas volume, etc. are set based on the experience earned from conventional plants

Fluidic Device (5/7)

Performance Requirements of Fluidic Device

- **Performance Requirements for Small Flow Injection**
  - Downcomer water level should be maintained
    - ✓ Small flow rate should be large enough to maintain the downcomer water level to keep the core reflood condition

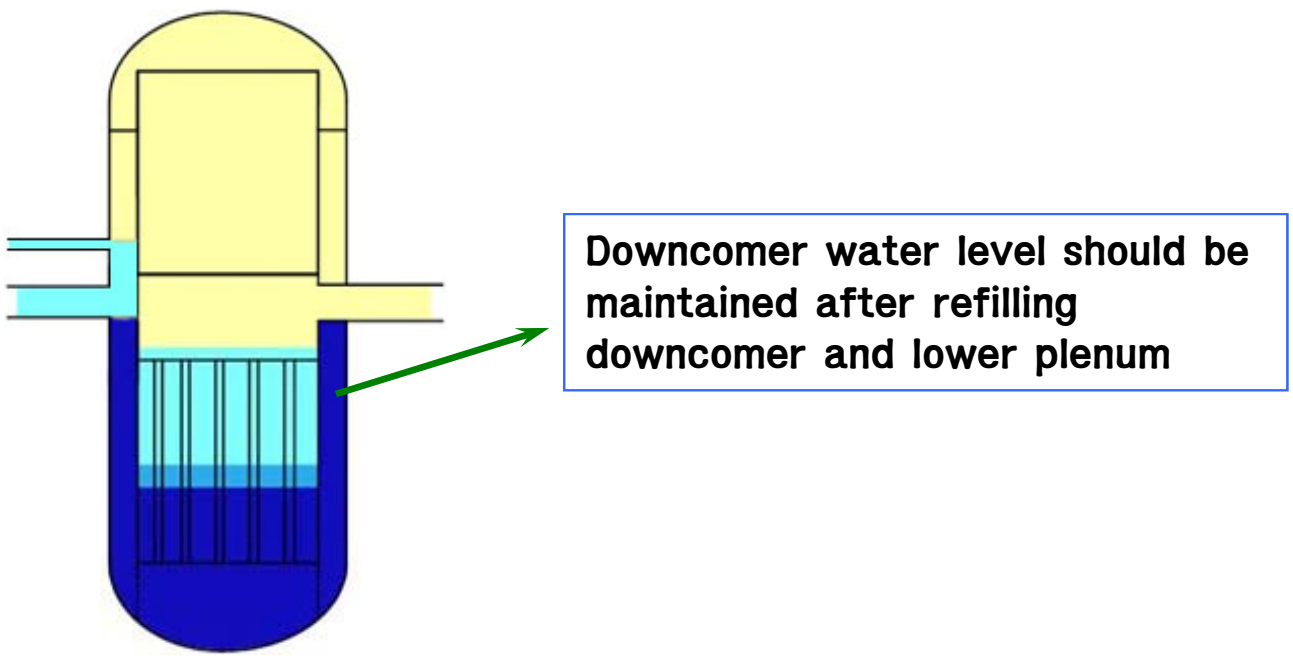

Fluidic Device (6/7)

Performance Requirements of Fluidic Device

➢ **Design Requirements for Small Flow Injection**

- Minimum small flow rate to maintain downcomer water level
  - ✓ Minimum small flow rate with margin is determined based on the hypothetical LBLOCA analysis
  - ✓ Minimum small flow rate and injection duration are related to SIP capacity

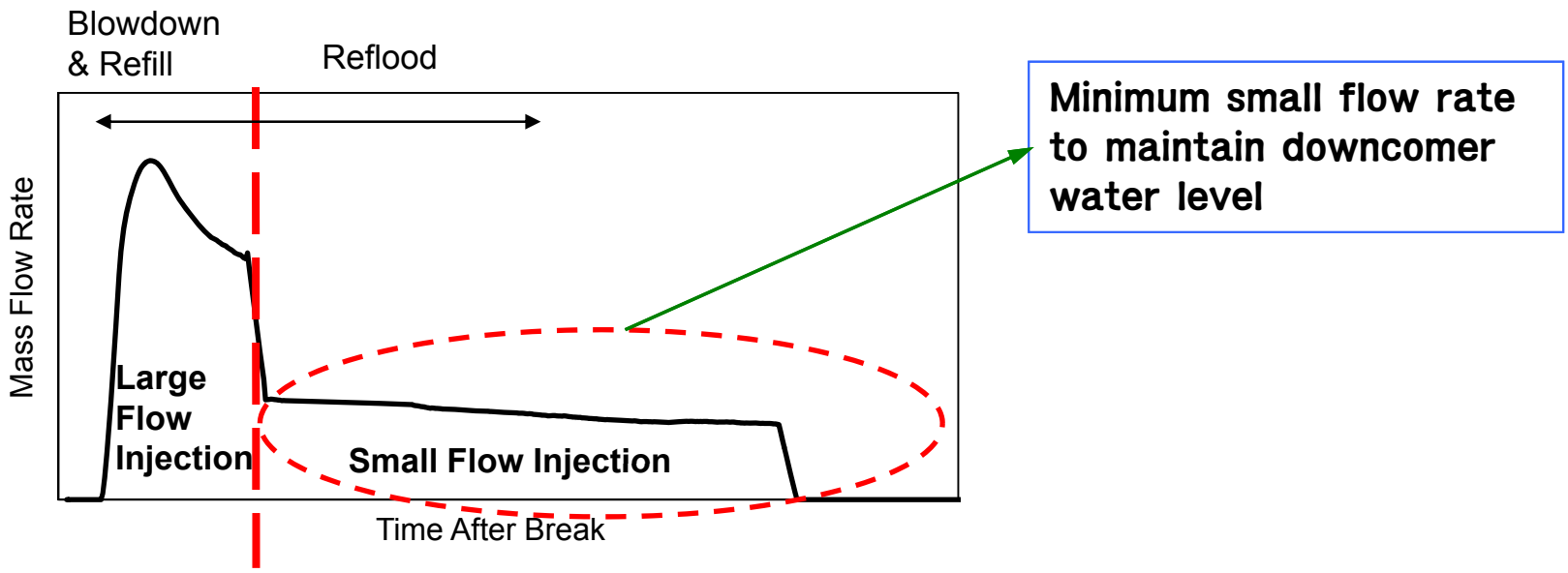

Fluidic Device (7/7)

Performance Verification Tests

- Full scale tests by Korea Atomic Energy Research Institute (KAERI)

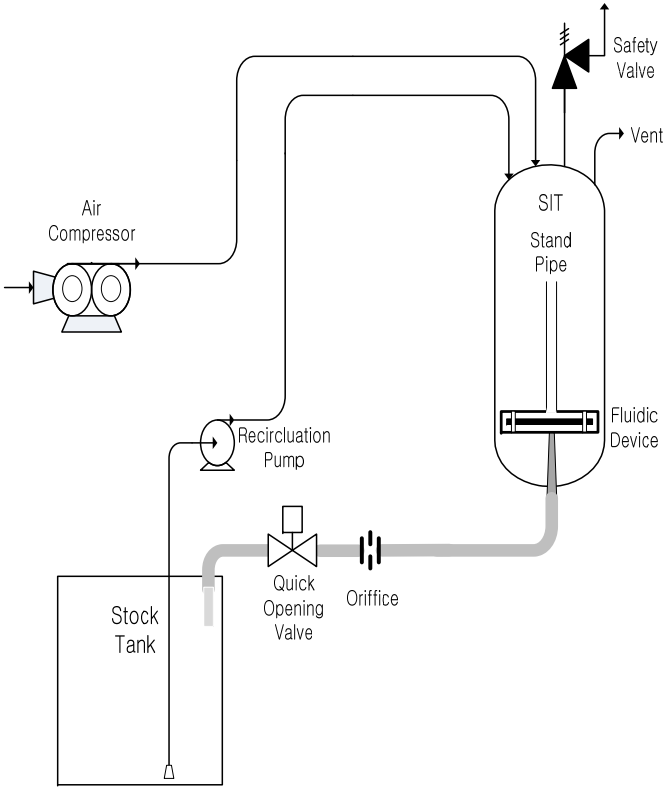

Summary

APR1400 Safety Injection Tank with Fluidic Device is designed to meet the requirements for large and small flow injection.

Topical Report for Fluidic Device was accepted in June 27, 2013.

1. PLUS7 Fuel Design
2. The Impact of TCD on APR1400
3. KCE-1 CHF Correlation
4. Fluidic Device
5. **LBLOCA Methodology**

Code Accuracy based Realistic Evaluation Model (CAREM) for LBLOCA Analysis of APR1400

- Objective
- Overview of APR1400 Design Features
- Experimental Program
- Overview of CAREM
- APR1400 Nodalization
- Experimental Data Coverings
- Uncertainties and Biases
- Final Licensing PCT

Objective

- To provide a preview of the APR1400 LBLOCA Realistic Evaluation Model (CAREM) Topical Report

CAREM : Code Accuracy based Realistic Evaluation Model

APR1400 Design Features

- SIS consists of 4 mechanically independent trains
- Direct Vessel Injection (DVI)
- A safety injection pump and a safety injection tank are installed in each train.
- All the ECC water is injected into the upper annulus of reactor pressure vessel
- Fluidic Device

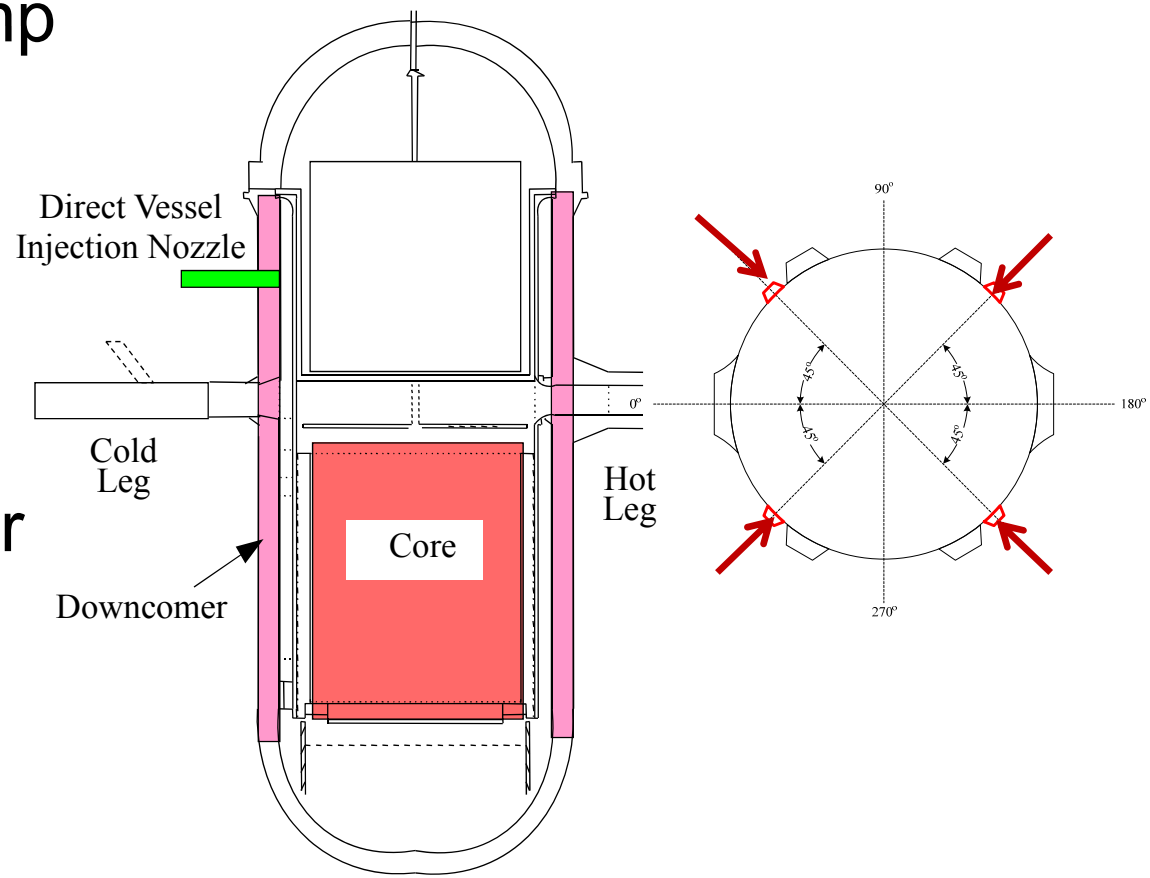

LOCA Experimental Program

Phenomena in the Upper D/C:

(MIDAS)

- Liquid Film Spreading
- Entrained Liquid Droplet
- H/T: Steam Condensation

Phenomena in the Middle D/C:

(MIDAS)

- Multi-D Steam-Water Interaction
- Direct ECC Bypass
- Sweep-out
- ECC Penetration

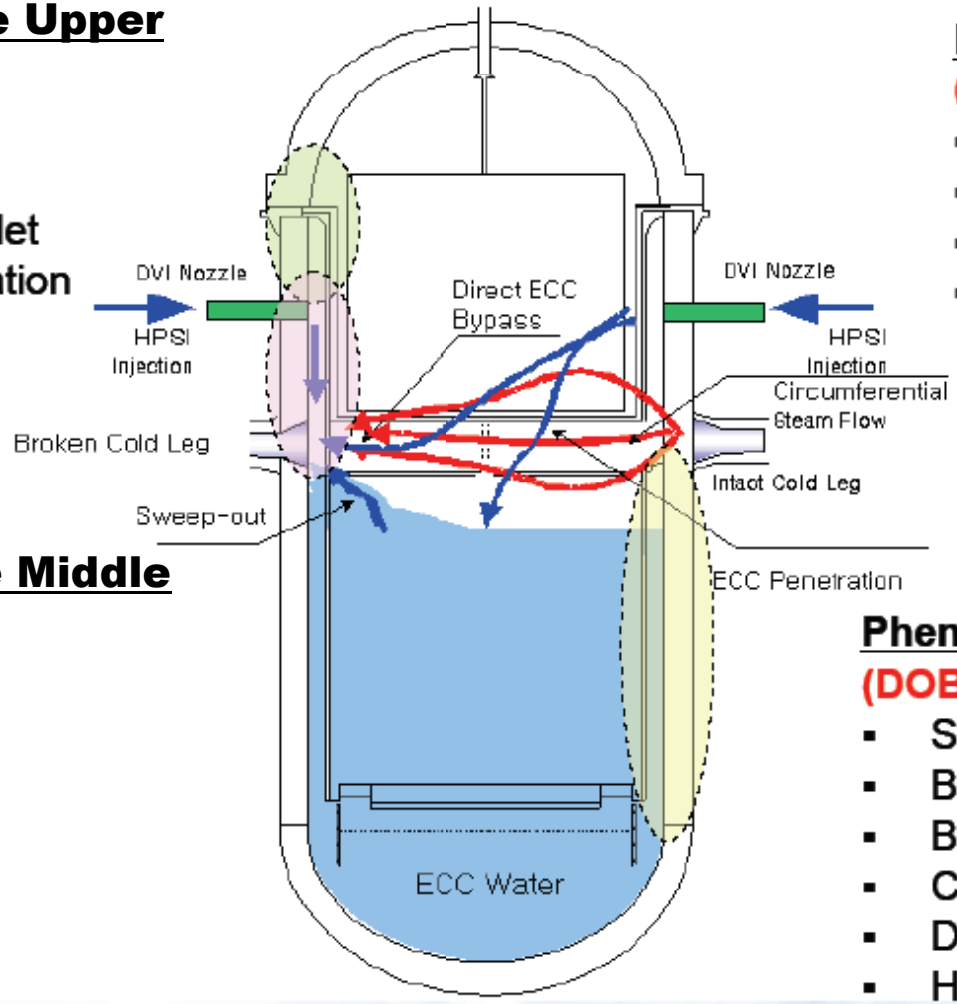

D/C-Core Interaction:

(ATLAS)

- Degree of Subcooling
- Reflood Rate
- Reflood H/T
- Manometric Oscillation

Phenomena in the *Lower* D/C

(DOBO)

- Stored Energy Release
- Boiling H/T at Wall
- Bubble Rise
- Condensation of Bubbles
- Degree of Subcooling
- Hydro-Static Head

VAPER : Full scale SIT experiment with fluidic device

Overview of CAREM (1/2)

- CAREM consists of 3 elements and 14 steps as in CSAU.
- Step 9 checks Experimental Data Covering (EDC) using the uncertainty parameters determined in step 8. If it fails, step 8 repeats until the covering is satisfied.
- Non-parametric statistics is used in EDC as well as in plant calculations.
- References:
  - Nuclear Tech. V.148, 3, 2004.
  - Nuclear Tech. V.158, 2007.

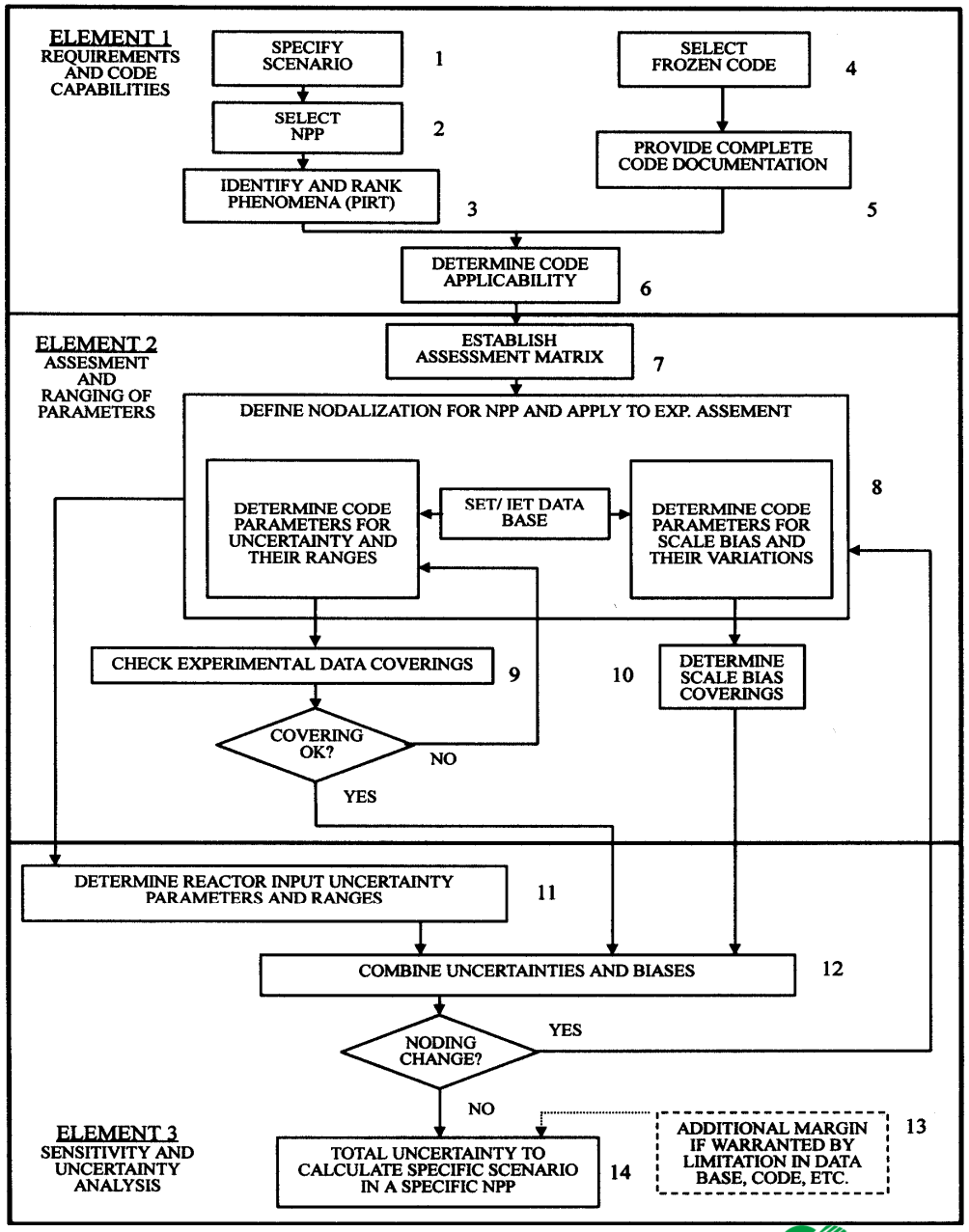

Overview of CAREM (2/2)

Best Estimate + Uncertainty Quantification

- RELAP5/MOD3.3 + CONTEMPT4/MOD5
- CSAU Based
- Uncertainty Quantification
  - Non-Parametric Statistics

APR1400 Nodalization

- Each loop and its components are modeled separately.
- Downcomer is modeled with 6 channels and 10 axial nodes.
- Core is modeled with 2 hydraulic channels and 20 axial nodes.
- Explicit and fine noding of SG primary and 2ndry sides.

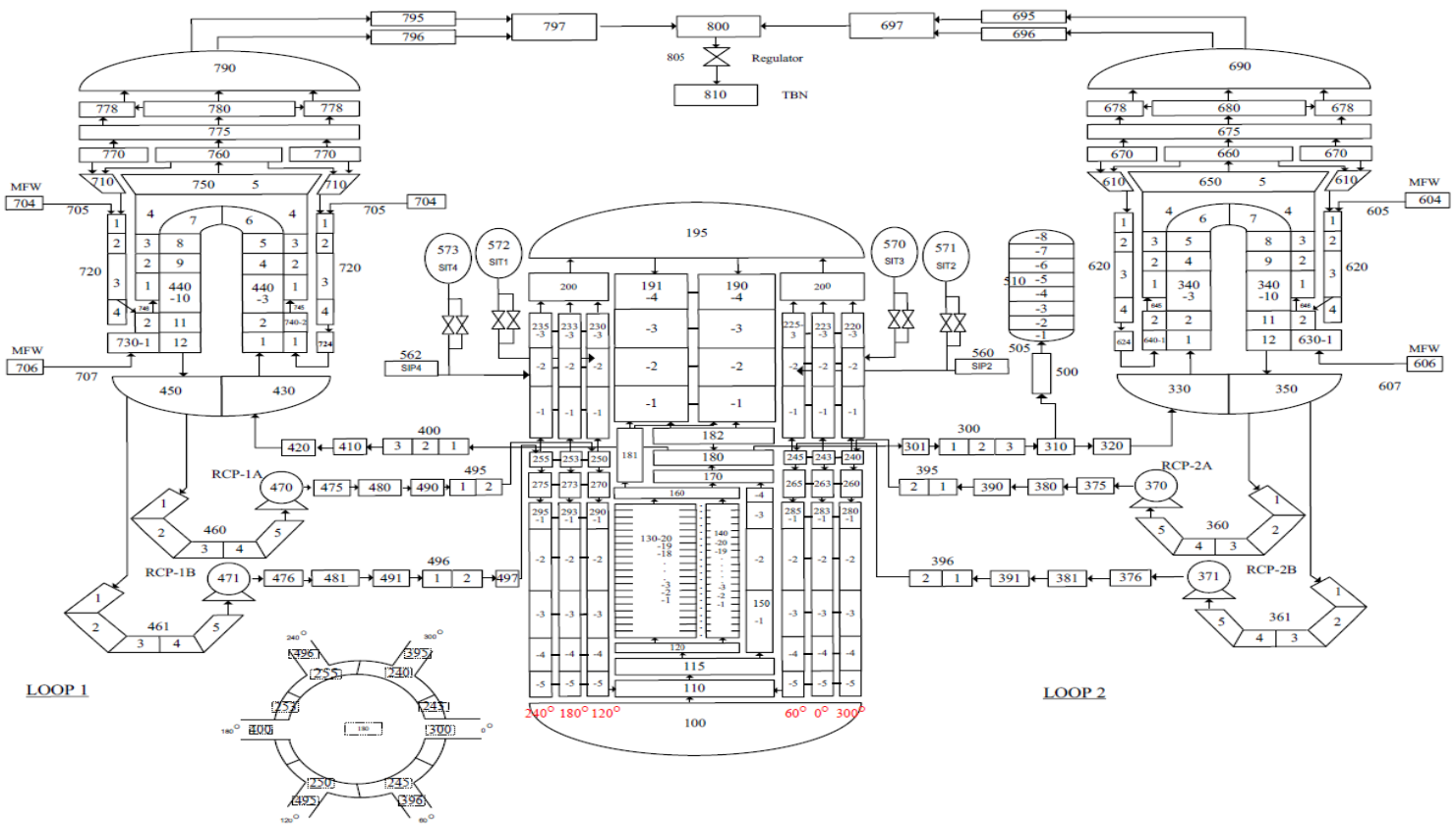

Experimental Data Coverings

- To confirm the uncertainty parameters as a set
- To confirm the predictability of the experiment PCT using the set of uncertainty parameters.
- To reflect the combined effect of the neglected phenomena in the PIRT.

Uncertainties and Biases

- Plant Calculations
  - Limiting Break Size was determined from sensitivity calculations.
  - 124 sensitivity calculations for the limiting break.
  - Code parameters and reactor operational parameters are considered together.

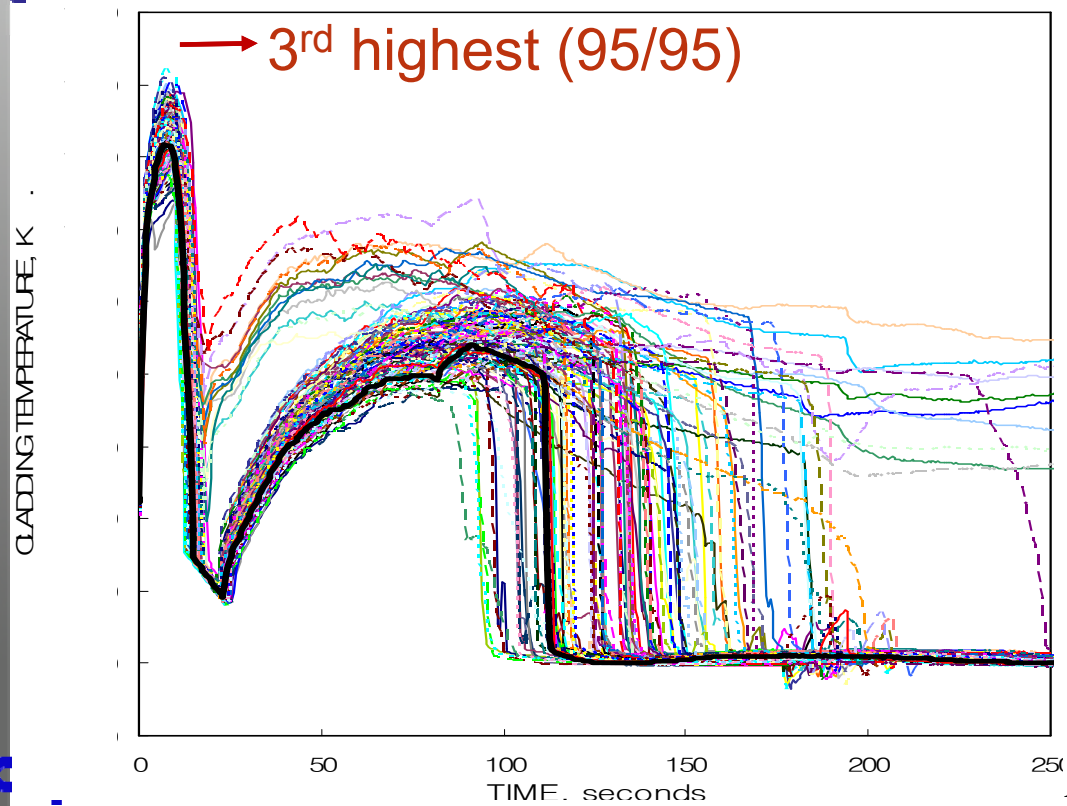

- Bias Evaluation
  - Biases are evaluated for selected cases from plant sensitivity calculations.
  - 3 biases are evaluated separately.
    - ECC bypass during refill
    - ECC bypass during reflood
    - Steam binding during reflood

Final Licensing PCT

- Total Uncertainty

$$\text{Licensing PCT} = PCT_{95/95} + \Delta PCT_{ECCbypass\_refill} + \Delta PCT_{ECCbypass\_reflood} + \Delta PCT_{steam\text{-}binding} + \Delta PCT_{additional}$$

※ $\Delta PCT_{ECCbypass\_reflood}$ neglected

$\Delta PCT_{additional}$ Uncertainty due to plot frequency, time step, .. etc.